Review of Battery Charger Topologies, Charging Power Levels, and Infrastructure for Plug-In Electric and Hybrid Vehicles

Murat Yilmaz, *Member, IEEE*, and Philip T. Krein, *Fellow, IEEE*

***Abstract*—This paper reviews the current status and implementation of battery chargers, charging power levels, and infrastructure for plug-in electric vehicles and hybrids. Charger systems are categorized into off-board and on-board types with unidirectional or bidirectional power flow. Unidirectional charging limits hardware requirements and simplifies interconnection issues. Bidirectional charging supports battery energy injection back to the grid. Typical on-board chargers restrict power because of weight, space, and cost constraints. They can be integrated with the electric drive to avoid these problems. The availability of charging infrastructure reduces on-board energy storage requirements and costs. On-board charger systems can be conductive or inductive. An off-board charger can be designed for high charging rates and is less constrained by size and weight. Level 1 (convenience), Level 2 (primary), and Level 3 (fast) power levels are discussed. Future aspects such as roadbed charging are presented. Various power level chargers and infrastructure configurations are presented, compared, and evaluated based on amount of power, charging time and location, cost, equipment, and other factors.**

***Index Terms*—Charging infrastructure, integrated chargers, levels 1, 2, and 3 chargers, conductive and inductive charging, plug-in electric vehicles (PEVs), plug-in hybrid electric vehicles (PHEVs), unidirectional/bidirectional chargers.**

I. Introduction

THERE is growing interest in electric vehicle (EV) and plug-in hybrid electric vehicle (PHEV) technologies because of their reduced fuel usage and greenhouse emissions [1]–[3]. PHEVs have the advantage of a long driving range since fuel provides a secondary resource. Connection to the electric power grid allows opportunities such as ancillary services, reactive power support, tracking the output of renewable energy sources, and load balance. For purposes of this paper, plug-in vehicles will be lumped together with EVs.

Manuscript received April 10, 2012; revised June 25, 2012; accepted August 3, 2012. Date of current version November 22, 2012. This work was supported in part by the Scientific and Technological Research Council of Turkey, in part by the Grainger Center for Electric Machinery and Electromechanics at the University of Illinois at Urbana-Champaign, and in part by the Global Climate and Energy Project at Stanford University. Recommended for publication by Associate Editor M. Ferdowsi.

M. Yilmaz is with the Department of Electrical and Computer Engineering, University of Illinois at Urbana-Champaign, Urbana, IL 61801 USA, and also with the Department of Electrical Engineering, Istanbul Technical University, Istanbul 34469, Turkey (e-mail: myilmaz@itu.edu.tr).

P. T. Krein is with the Department of Electrical and Computer Engineering, University of Illinois at Urbana-Champaign, Urbana, IL 61801 USA (e-mail: krein@illinois.edu).

Color versions of one or more of the figures in this paper are available online at http://ieeexplore.ieee.org.

Digital Object Identifier 10.1109/TPEL.2012.2212917

In the U.S., an official domestic goal of putting one million EVs on the road by 2015 has been established, and public policies to encourage electrification have been implemented by governments at all levels [4]. Several organizations, such as IEEE, the Society of Automotive Engineers (SAE), and the Infrastructure Working Council (IWC), are preparing standards and codes with respect to the utility/customer interface. EVs have yet to gain wide acceptance. Three important barriers include the high cost and cycle life of batteries, complications of chargers, and the lack of charging infrastructure. Another drawback is that battery chargers can produce deleterious harmonic effects on electric utility distribution systems [5], [6], although chargers with an active rectifier front end can mitigate this impact.

Most EV charging can take place at home overnight in a garage where the EV can be plugged in to a convenience outlet for Level 1 (slow) charging. Level 2 charging is typically described as the primary method for both private and public facilities and requires a 240 V outlet. These charging power levels are summarized in Table I. Future developments focus on Level 2; semifast charging provides ample power and can be implemented in most environments [7]–[10]. Usually single-phase solutions are used for Levels 1 and 2. Level 3 and dc fast charging are intended for commercial and public applications, operating like a filling station, and three-phase solutions normally apply. Stations for public use are likely to use Level 2 or 3 charger installed in parking lots, shopping centers, hotels, rest stops, theaters, restaurants, etc. [11]–[13]. A public charging infrastructure can address range anxiety [14].

EV battery chargers can be classified as *on-board* and *off-board* with unidirectional or bidirectional power flow. Unidirectional charging is a logical first step because it limits hardware requirements, simplifies interconnection issues, and tends to reduce battery degradation [15], [16]. A bidirectional charging system supports charge from the grid, battery energy injection back to the grid, and power stabilization with adequate power conversion [17]–[20]. Typical on-board chargers limit high power because of weight, space, and cost constraints [21], [22]. They can be integrated with the electric drive to avoid these problems [23]–[25]. On-board charger systems can be conductive or inductive. Conductive charging systems use direct contact between the connector and the charge inlet [26]. An inductive charger transfers power magnetically. This type of charger has been explored for Levels 1 and 2 [27]–[29] and may be stationary [30] or moving [31]–[33]. An off-board battery charger is less constrained by size and weight.

This paper reviews the current status and implementation of EV battery chargers, power levels, and charging infrastructure.

0885-8993/$31.00 © 2012 IEEE

Tesla, Inc.
Ex - 1023
Page 1 of 19

TABLE I
CHARGING POWER LEVELS (BASED IN PART ON [26])

Power Level Types	Charger Location	Typical Use	Energy Supply Interface	Expected Power Level	Charging Time	Vehicle Technology
Level 1 (Opportunity) 120 Vac (US) 230 Vac (EU)	On-board 1-phase	Charging at home or office	Convenience outlet	1.4kW (12A) 1.9kW (20A)	4–11 hours 11–36 hours	PHEVs (5-15kWh) EVs (16-50kWh)
Level 2 (Primary) 240 Vac (US) 400 Vac (EU)	On-board 1- or 3-phase	Charging at private or public outlets	Dedicated EVSE	4kW (17A) 8kW (32 A) 19.2kW (80A)	1–4 hours 2–6 hours 2–3 hours	PHEVs (5-15 kWh) EVs (16-30kWh) EVs (3-50kWh)
Level 3 (Fast) (208-600 Vac or Vdc)	Off-board 3-phase	Commercial, analogous to a filling station	Dedicated EVSE	50kW 100kW	0.4–1 hour 0.2–0.5 hour	EVs (20-50kWh)

It begins with an overview of battery charger systems. This is followed by an overview and evaluation of battery infrastructure and charging power levels. Various power levels and infrastructure configurations are presented, compared, and evaluated based on the amount of power required, charging time and location, cost, component ratings, equipment, and other factors.

II. BATTERY CHARGERS FOR PLUG-IN ELECTRIC AND HYBRID VEHICLES

Battery chargers play a critical role in the development of EVs. Charging time and battery life are linked to the characteristics of the battery charger. A battery charger must be efficient and reliable, with high power density, low cost, and low volume and weight. Its operation depends on components, control, and switching strategies. Charger control algorithms are implemented through analog controllers, microcontrollers, digital signal processors, and specific integrated circuits depending upon the rating, cost, and types of converters. An EV charger must ensure that the utility current is drawn with low distortion to minimize power quality impact and at high power factor to maximize the real power available from a utility outlet. IEEE-1547 [34], SAE-J2894 [35], IEC1000-3-2 [36], and the U.S. National Electric Code (NEC) 690 [37] standards limit the allowable harmonic and dc current injection into the grid, and EV chargers are usually designed to comply.

Modern EV battery chargers contain a boost converter for active power factor correction (PFC) [38]. The design in [39] uses a dedicated diode bridge to rectify the ac input voltage to dc, which is followed by the boost section. The bridgeless boost PFC topology avoids the need for the rectifier input bridge yet maintains this boost topology [40]. The converter solves the problem of heat management in the input rectifier diode bridge inherent to the conventional boost PFC, but increases electromagnetic interference (EMI) [41]. Interleaving has been proposed to reduce battery charging current ripple and inductor size [42], [43]; a unidirectional configuration presented in [40] is illustrated in Fig. 1. It consists of two boost converters in parallel operating 180° out of phase [44]. The interleaved boost converter has the advantage of paralleled semiconductors. With ripple cancellation at the output, it also reduces stress on output capacitors. However, similar to the boost, this topology must provide heat management for the input bridge rectifier; therefore, it is limited to power levels up to approximately 3.5 kW [45]. A bridge-

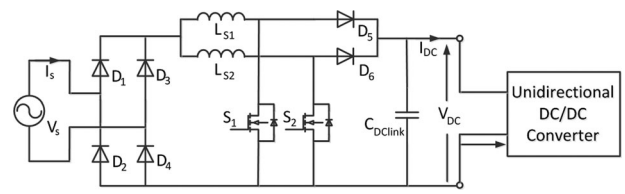

Fig. 1. Interleaved unidirectional charger topology, as in [40].

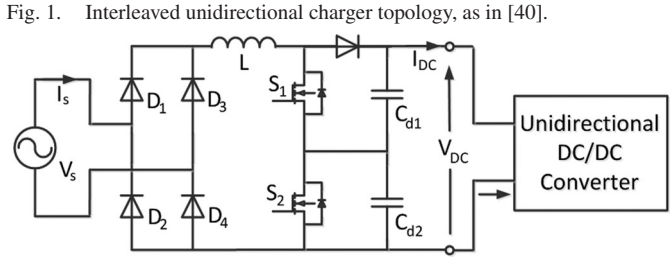

Fig. 2. Single-phase unidirectional multilevel charger circuit, as in [48].

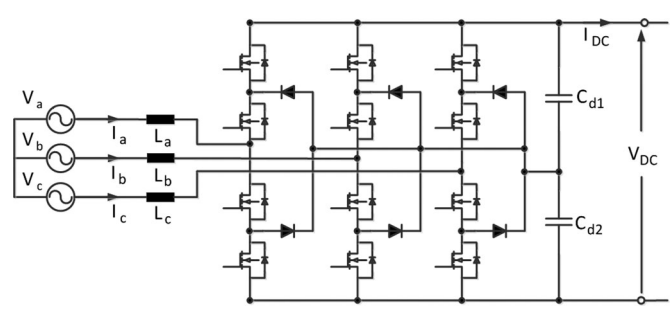

Fig. 3. Three-level diode-clamped bidirectional charger circuit, as in [15]

less interleaved topology was proposed for power levels above 3.5 kW in [46].

Multilevel converters can reduce size, switching frequency, and stress on devices and are suitable for Level 3 EV chargers. They allow for a smaller and less expensive filter. The added complexity and additional components increase the cost and required control circuitry [47]. Currently, most PEVs use a single-phase on-board charger to recharge their batteries [18], and many circuit configurations are reported in the literature. In Fig. 2, the topology of a single-phase unidirectional multilevel charger is suitable, and is a common multilevel charger topology for low-power Levels 1 and 2 charging [48]. Three-phase bidirectional multilevel converters are recommended for high-power Level 3 charger systems. These converters provide a high

Tesla, Inc.
Ex - 1023
Page 2 of 19

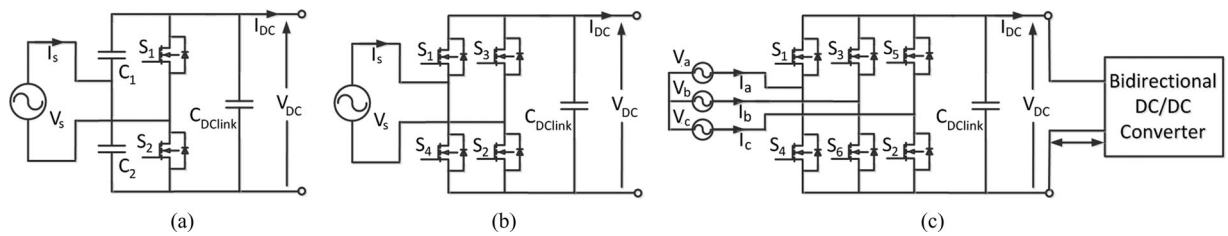

Fig. 4. Bidirectional chargers: (a) single-phase half-bridge, (b) single-phase full-bridge, and (c) three-phase full-bridge.

Fig. 5. SAE's J1772 *combo connector* for ac or dc Level 1 and Level 2 charging [65].

level of power quality at input mains with reduced THD, high power factor and reduced EMI noise and boost, and ripple-free, regulated dc output voltage insensitive to load and supply disturbances [49]–[53]. Three-level bidirectional dc–dc converters have been investigated for charge station application [54], as shown in Fig. 3 [15]. These converters are characterized by low switch voltage stress and used in smaller energy-storage devices such as inductors and capacitors [55].

Various topologies and schemes have been reported for both single-phase and three-phase chargers [15], [48]. These chargers can use half-bridge or full-bridge topologies. The half bridge has fewer components and lower cost, but exhibits high component stresses. Full-bridge systems have more components and higher cost, with lower component stresses [56]. This topology requires more pulse-width modulation (PWM) inputs that add to the complexity and cost of control circuitry. Fig. 4(a)–(c) shows basic bidirectional circuits. Fig. 4(a) shows a single-phase half-bridge bidirectional charger. Fig. 4(b) shows a single-phase full-bridge charger, and Fig. 4(c) shows a three-phase full-bridge bidirectional unit that interfaces to a dc–dc converter.

A. Charger Power Levels and Infrastructure

Charger power levels reflect power, charging time and location, cost, equipment, and effect on the grid. Deployment of charging infrastructure and electric vehicle supply equipment (EVSE) is an important consideration because of many issues that need to be addressed: charging time, distribution, extent, demand policies, standardization of charging stations, and regulatory procedures. Charging infrastructure availability can be used to reduce on-board energy storage requirements and costs.

EV charge cords, charge stands (residential or public), attachment plugs, power outlets, vehicle connectors, and protection are major components of EVSE [26], [57]. They are generally found in two configurations: a specialized cord set, and a wall or pedestal mounted box. The specific configurations vary from location to location and country to country depending on frequency, voltage, electrical grid connection, and transmission standards [58]. According to the Electric Power Research Institute (EPRI) [59], most EV owners are expected to charge overnight at home. For this reason, Level 1 and Level 2 charging equipment will be the primary options [10].

1) Level 1 Charging: Level 1 charging is the slowest method. In the U.S., Level 1 uses a standard 120 V/15 A single-phase grounded outlet, such as an NEMA 5-15R. The connection may use a standard J1772 connector into the EV ac port [60]. For home or business sites, no additional infrastructure is necessary. Low off-peak rates are likely to be available at night. The installed cost of a residential Level 1 charger infrastructure has been reported as approximately \$500–\$880 [61], [62], although in general it would be expected that this level will be integrated into the vehicle.

2) Level 2 Charging: Level 2 charging is the primary method for dedicated private and public facilities. This charging infrastructure can also be on-board to avoid redundant power electronics. Existing Level 2 equipment offers charging from 208 V or 240 V (at up to 80 A, 19.2 kW). It may require dedicated equipment and a connection installation for home or public units [7], although vehicles such as the Tesla have the power electronics on board and need only the outlet. Most U.S. homes have 240 V service available, and Level 2 devices can charge a typical EV battery overnight. Owners seem likely to prefer Level 2 technology owing to its faster charging time and standardized vehicle-to-charger connection. A separate billing meter is typical. A Level 2 charger is reported to have an installed cost between \$1000 and \$3000 [63], with a residential unit costing \$2150 in [62]. The Tesla Roadster charging system is reported to impose an additional cost of \$3000 [64]. The new standard has an SAE J1772 [65] ac charge connector on top and a two-pin dc connector below and is intended to enable either ac or dc fast charging via a single connection, as shown in Fig. 5.

3) Level 3 Charging: Level 3 commercial fast charging offers the possibility of charging in less than 1 h. It can be installed in highway rest areas and city refueling points, analogous to gas stations. It typically operates with a 480 V or higher three-phase circuit [14] and requires an off-board charger to provide regulated ac–dc conversion. The connection to the vehicle may be direct dc. Level 3 charging is rarely feasible for

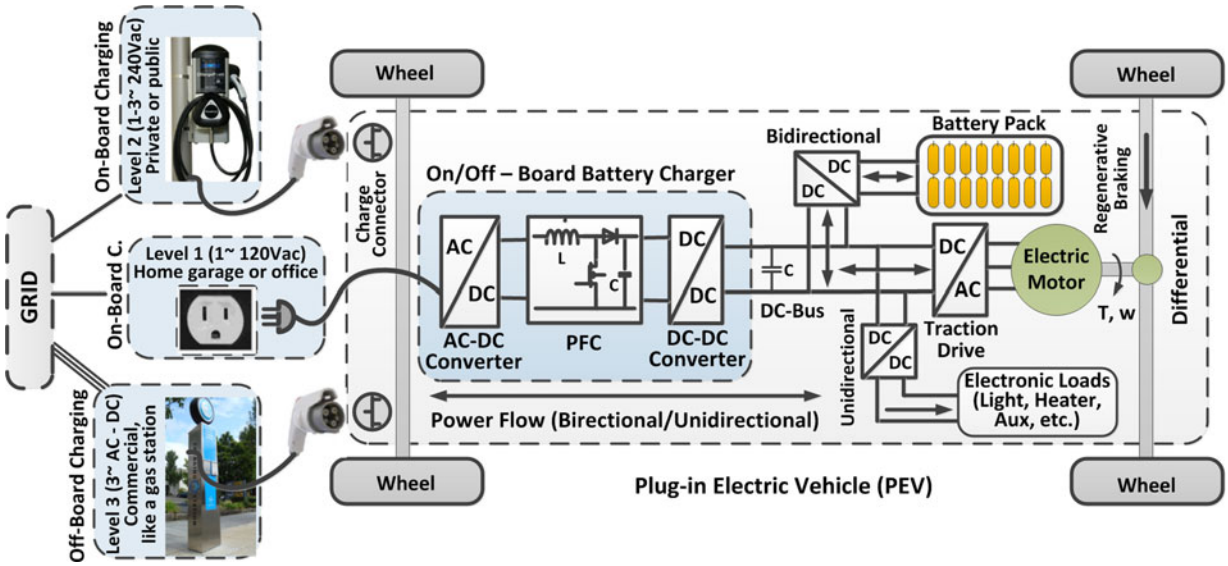

Fig. 6. On/off board charging system and power levels for EVs.

TABLE II
CHARGING CHARACTERISTICS AND INFRASTRUCTURES OF SOME MANUFACTURED PHEVS AND EVS

	Battery Type and Energy	All-Electric Range	Connector Type	Level 1 Charging		Level 2 Charging		DC Fast Charging	
				Demand	Charge Time	Demand	Charge Time	Demand	Charge Time
Toyota Prius PHEV(2012)	Li-Ion 4.4kWh	14 miles	SAE J1772	1.4kW (120V)	3 hours	3.8kW (240V)	2.5 hours	N/A	N/A
Chevrolet Volt PHEV	Li-Ion 16kWh	40 miles	SAE J1772	0.96–1.4 kW	5–8 hours	3.8kW	2–3 hours	N/A	N/A
Mitsubishi i-MiEV EV	Li-Ion 16kWh	96 miles	SAE J1772 JARI/TEPCO	1.5kW	7 hours	3kW	14 hours	50kW	30 minutes
Nissan Leaf EV	Li-Ion 24kWh	100 miles	SAE J1772 JARI/TEPCO	1.8kW	12–16 hours	3.3kW	6–8 hours	50 + kW	15-30 minutes
Tesla Roadster EV	Li-Ion 53kWh	245 miles	SAE J1772	1.8kW	30 + hours	9.6–16.8 kW	4–12 hours	N/A	N/A

residential areas. Standards for dc plugs and infrastructure requirements are being set, as shown in Fig. 5. A Japanese protocol known as CHAdeMO is gaining international recognition [66]. Cost of installation is a potential issue. Level 3 charging infrastructure costs between $30 000 and $160 000 have been reported [67], [68]. Maintaining the charging stations is another cost factor [69].

The SAE J1772 standard [26] prescribes that Level 1 and Level 2 EVSE should be located on the vehicle, while Level 3 is located outside the vehicle [70], [71]. General public stations are expected to use Levels 2 or 3 to enable fast charging in public places [72]. A lower charge power is an advantage for utilities seeking to minimize on-peak impact [73]. High-power rapid charging can increase demand and has the potential to quickly overload local distribution equipment at peak times [74], [75]. Level 2 and 3 charging can increase distribution transformer losses, voltage deviations, harmonic distortion, peak demand, and thermal loading on the distribution system. This could significantly impact transformer life, reliability, security, efficiency, and economy of developing smart grids due to reduced transformer life [76]. Degradation of typical distribution equipment can be mitigated by using a controlled smart-charging scheme [77]. A reliable communication network and control of public charging is needed to enable the successful integration of a large number of EVs [78]. Charging characteristics and infrastructure aspects for a few vehicles are detailed in Table II.

B. International Charging Codes and Standards for EVs

The successful deployment of EVs over the next decade is linked to the introduction of international standards and codes, a universal infrastructure, and associated peripherals and user-friendly software on public and private property, as implied in Fig. 6. Safety codes and standards address a wide range of issues relating to EVs. Costs associated with the charging infrastructure correlate with hardware standards [79], [80]. Certain standards are making EV charge infrastructure more

Tesla, Inc.
Ex - 1023
Page 4 of 19

complicated and expensive than conventional electrical infrastructure. Article 625-18 of the National Electrical Code [81], for example, requires that connectors and cables for Levels 2 and 3 be de-energized unless connected to a vehicle. This adds cost to the EVSE. (Vehicle manufacturers generally add an interlock that prevents a vehicle from being driven while on charge, although this vital feature is not uniform in standards).

A number of workgroups have been formed by key organizations such as the International Energy Agency (IEA), the Society for Automobile Engineers (SAE, J1772 Conductive Connector, J1773 Inductively Coupled Charging, J2847/2836/2931 Communications, J2894 Power Quality, J2954 Wireless Charging, J2293 Energy Transfer System, J2344/J1766/J2578 Safety), the Institute of Electrical and Electronic Engineers (IEEE, 1547 Grid Tie, P1809 Electric, P2030 Smart Grid), the National Electric Code (NEC625 EV Charging Systems), Infrastructure Working Council (IWC), the National Fire Protection Association (NFPA 70, NEC 625/626, 70B Electrical Equipment Maintenance, 70E Safety), Underwriters Laboratories Inc. (UL, 2231 Safety, 2251, 2202, 2594 EVSE), Deutsches Institut für Normung (DIN 43538 Batteries Systems, VDE 0510-11 Safety), International Electromechanical Commission (IEC, TC21 Battery, TC64 Electrical Installations and Protection Electric Shock, TC69 Safety and Charge Infrastructure, TC22/SC3 Electrical, 61851-2-3 EVs Conductive Charging), and Japan Electric Vehicle Association (JEVS, C601 Plugs and receptacles for EV charging, D701 Test Procedure of Batteries, G101-109 Quick Charging). There are many participants, technical committees, and groups internationally. Thus, there is much duplication [59], [79]–[81].

Some currently available PEVs that are equipped to accept dc fast charging (such as the Nissan Leaf and Mitsubishi i-MiEV) are using the CHAdeMO connector, developed in coordination with Tokyo Electric Power Company [11]. SAE is also working on a "hybrid connector" standard for fast charging that adds high-voltage dc power contact pins to the J1772 connector, enabling use of the same receptacle for all charging levels. The new standard is expected to be available on EVs in 2013.

In the U.S. there are a wide range of consensus model codes and standards that address EVs and the multitude of issues relating to and supporting EVs. On-board vehicle concerns are generally regulated more on a federal level and are addressed by SAE. The concerns and interests of emergency responders are basically self-regulated, with these organizations following model codes and standards provided by NFPA and other standards developers. The built infrastructure in the U.S. is normally regulated at the state or local level [82].

C. Unidirectional Chargers

Two types of power flow are possible between EVs and the electric grid, as shown in Fig. 7. EVs with unidirectional chargers can charge but not inject energy into the power grid. These chargers typically use a diode bridge in conjunction with a filter and dc–dc converters. Today, these converters are implemented in a single stage to limit cost, weight, volume, and losses [15]. High-frequency isolation transformers can be employed when desired [48], [83]. Fig. 8 shows a unidirectional full-bridge series resonant converter for a Level 1 charging system similar to that represented in [83].

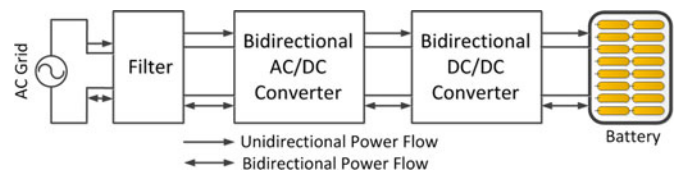

Fig. 7. General unidirectional and bidirectional topology.

Simplicity in the control of unidirectional chargers makes it relatively easy for a utility to manage heavily loaded feeders due to multiple EVs [16]. Those with active front ends can provide local reactive power support by means of current phase-angle control without having to discharge a battery. Research on unidirectional charging seeks optimal charging strategies that maximize benefits and explore the impact on distribution networks [16], [84]. With a high penetration of EVs and active control of charging current, unidirectional chargers can meet most utility objectives while avoiding cost, performance, and safety concerns associated with bidirectional chargers [18], [85].

D. Bidirectional Chargers

A typical bidirectional charger has two stages: an active grid-connected bidirectional ac–dc converter that enforces power factor and a bidirectional dc–dc converter to regulate battery current [83], [86]. These chargers can use nonisolated or isolated circuit configurations. When operating in charge mode, they should draw a sinusoidal current with a defined phase angle to control power and reactive power. In discharge mode, the charger should return current in a similar sinusoidal form [18], [87], [88]. A bidirectional charger supports charge from the grid, battery energy injection back to the grid, referred to as vehicle-to-grid (V2G) operation mode, and power stabilization [19], [48]. The topology shown in Fig. 9(a) is a nonisolated bidirectional two-quadrant charger. This circuit has two switches, which greatly simplifies the control circuitry. However, there are two high-current inductors that tend to be bulky and expensive, and it can only buck in one direction and boost in the other [47]. The topology in Fig. 9(b) is an isolated bidirectional dual-active bridge charger. While this circuit provides high power density and fast control, the large number of components can add to cost [47]. Table III summarizes unidirectional and bidirectional charger topologies and comparisons.

While most studies have focused on bidirectional power flow, there are serious challenges for adoption [89]. Bidirectional power flow must overcome battery degradation due to frequent cycling, the premium cost of a charger with bidirectional power flow capability, metering issues, and necessary distribution system upgrades [90]. Customers are likely to require an energy guarantee to ensure that vehicle state-of-charge is predictable (and high) when it is time to drive. Successful implementation of bidirectional power flow will require extensive safety measures [90], [91]. Anti-islanding protection and other interconnection issues must also be addressed. Levels 1, 2, and 3 chargers

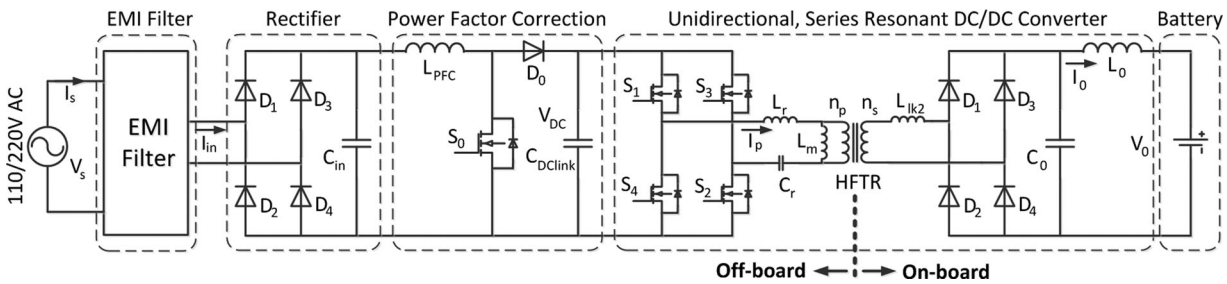

Fig. 8. On-board unidirectional full-bridge series resonant charger presented in [83] for Level 1 system (3.3 kW).

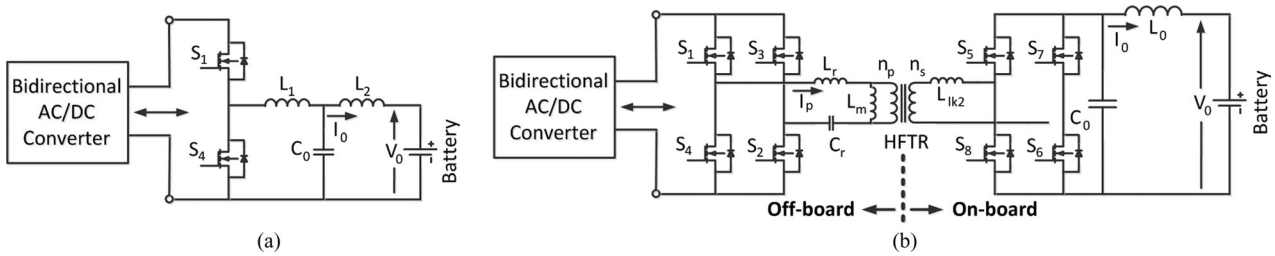

Fig. 9. (a) Nonisolated bidirectional two-quadrant charger. (b) Isolated bidirectional dual active bridge charger.

TABLE III
UNIDIRECTIONAL AND BIDIRECTIONAL CHARGER TOPOLOGIES AND COMPARISONS

	Configurations		Properties and Comparison	Methods for Improving Performance	Control Algorithms
Unidirectional Chargers	Single-phase Non-isolated or Isolated (Low power-slow charging) Three-phase Non-isolated or Isolated (High power-fast charging)	-Diode Bridge + Buck -Diode Bridge + Boost -Diode Bridge + Buck/Boost -Diode Bridge + Isolated Con. - Flyback - Forward - Pushpull - Half-Bridge - Full-Bridge - SEPIC - CUK - Multilevel	**Buck is** the simplest converter if you require an output voltage that is lower than the input, as it requires only a small number of components. It wastes very little energy. **Boost** converts a lower input voltage to a higher output. It contains at least a pair of diodes and transistors and at least one capacitor or any energy storage element. Output voltage can be either higher or lower than input in **Buck-Boost**; also, a negative-polarity output is obtained with respect to the common terminal of the input current. The main advantage is the small number of devices. Disadvantages are the high input voltage ripple and high electrical stresses. **Flyback** is widely used in applications where an isolated conversion is required, for low-power ranges. High output voltages can be quite easily obtained, because there is no inductor in the output section. It is simple and inexpensive, but has high voltage stress and low efficiency due to leakage inductor. **Forward** can be considered a direct derivative of the **Push-Pull** converter, where one of the switches is replaced by a diode. The cost is usually lower, which makes this topology very common. Similar to the buck-boost, the **CUK** provides a negative-polarity regulated output voltage with respect to the common terminal of the input. Advantages are a continuous current at the input (and at the output) and reduced input and output current. Disadvantages are a high number of passive components, large inductors and high electrical stresses. **SEPIC** contains two large inductors and output capacitor; output current is discontinuous. It has a non-inverting buck-boost characteristic. It also exhibits (like the Cuk) the desirable feature that the switch control terminal is connected to ground; this simplifies the construction of the gate drive circuitry. Voltage stresses in the capacitor are lower than in the Cuk. It exhibits non-pulsating input current. Transfer capacitor is rated only to input voltage. Cuk and SEPIC/**Luo** can convert power bi-directionally by using two active switches. The current stress for active switches and diodes in the Cuk and SEPIC/Luo are larger than that in the half bridge under the same input/output voltage and power conditions. Therefore, the half-bridge is expected to be more efficient. It also has fewer inductors and capacitors.	**-PFC** **-Bridgless boost PFC** **-Interleaved:** Reduced battery charging current, inductor size and stress on output capacitor, but limited power level **-Bridgless Interleaved:** High power level **-Multicell** **-Resonant Circuit:** Reduced switching stress and losses, high efficiency **-Soft/Hard switching** **-Zero voltage and current switching (ZVS ZCS) :** Reduced size and weight	-PI -PID -Sliding Mode -Fuzzy Logic -Adaptive -Neural Network
Bidirectional Chargers	Single-phase Non-isolated or Isolated (Low power- slow charging) Three-phase Non-isolated or Isolated (High power-fast charging)	-Push-pull -Half-Bridge -Full- Bridge (VSI –CSI) -Multilevel (VSI – CSI) -Matrix Converters	**Half-Bridge:** Fewer components, lower cost, control simplicity, but high component stress. It has the same number of active and passive components as the two-quadrant buck-boost. There is only one inductor instead of two (SEPIC – CUK). Higher efficiency than the SEPIC and CUK, because it has lower inductor conduction and switching losses. Drawback is its discontinuous output current when operating as boost. **Full-Bridge:** More components and PWM inputs, control complexity, higher cost, but lower component stress. It has a high conversion ratio and power level. **Multilevel:** Requires additional control circuitry. Additional components increase cost and complexity, but lower component stress and losses. It has high efficiency, reduced size and switching frequency. It includes EMI and a high frequency component and a small and inexpensive filter. **Matrix Converters**: Provides sinusoidal input/output waveforms, with minimal higher order harmonics and no sub-harmonics .It has inherent bidirectional energy flow; the input power factor can be fully controlled. It has minimal energy storage requirements, which allows elimination of bulky and lifetime-limited energy-storing capacitors. But it has a maximum input/output voltage transfer ratio limited to 87% for sinusoidal input and output waveforms and requires more semiconductor devices than a conventional ac-ac indirect power frequency converter, since no monolithic bidirectional switches exist and, consequently, discrete unidirectional devices, variously arranged, have to be used for each bidirectional switch. It is particularly sensitive to disturbances of the input voltage system.		

can be unidirectional. Bidirectional chargers are expected only for Level 2 infrastructures, because Level 1 power limits and cost targets are low, and it is vital to maximize flexibility. In Level 3 fast charging, reverse power flow conflicts with the basic purpose and premise of minimizing connection time and delivering substantial energy as quickly as possible. Table IV summarizes unidirectional/bidirectional charger infrastructure comparisons that include requirements, challenges, benefits, cost, battery and distribution system effect, safety, control, power level, and flow.

E. On-Board and Off-Board Chargers

A charger located inside the vehicle allows EV owners to charge their vehicles wherever a suitable power source is available. Typical on-board chargers limit the power to Level 1

Tesla, Inc.
Ex - 1023
Page 6 of 19

TABLE IV
UNIDIRECTIONAL AND BIDIRECTIONAL CHARGER INFRASTRUCTURE COMPARISONS

	Power Flow and Switches	Situation	Power Level	Requirements and Challenges	Isolation and Safety	Control	Cost	Battery Effect	Distribution system	Benefits
Unidirectional Chargers and Infrastructure	One-way electrical energy flow, basic battery charge (G2V) Diode Bridge + Unidirectional converter	Available	Levels 1, 2 and 3	Power connection to the grid	Non-isolated or isolated	Simple. Active control of charging current. Basic control can be managed with time-sensitive energy-pricing.	Low price, no additional cost	No discharging degradation	No update or investment	-Provides services based on reactive power and dynamic adjustment of charge rates, even without reversal -Supplies or absorbs reactive power, without having to discharge a battery, by means of current phase-angle control -Voltage and frequency control
Bidirectional Chargers and Infrastructure	Two-way electrical energy flow and communication, charge/discharge (V2G) MOSFET (low power) IGBT (Medium power) GTO (High power level)	Not available	Expected only for Level 2	-Two-way power connection and communication -Suitable smart metering/sensors -Substantial information exchange -Extra investment and cost -Energy losses -Device stress	-Non-isolated or isolated. Non-isolated has advantages of simple structure, high efficiency, low cost, high reliability, etc. -Extensive safety measures -Anti-islanding protection Interconnection issues	Complex. Extra drive control circuits	High price	Degradation due to frequent cycling	Necessary updates and investment costs	-Ancillary services Voltage regulation Frequency regulation (down-up) -Spinning reserves -Reactive power Support -Peak shaving -Valley filling -Load following -Energy balance

because of weight, space, and cost constraints [21], [22]. Resonant circuits can be helpful. The unidirectional full-bridge series resonant on-board Level 1 charger [92] shown in Fig. 8 is an example. Given that typical power electronics ratings in an EV are at least 30 kW, off-board charging involves redundant power electronics and the associated extra costs. Other disadvantages include the risk of vandalism and added clutter in an urban environment [93].

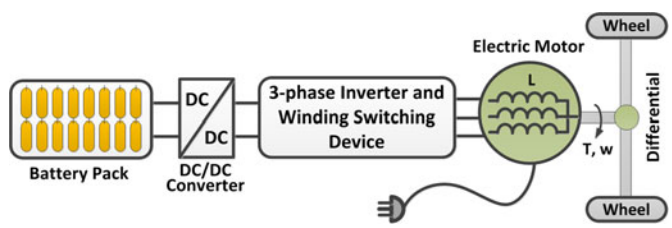

Fig. 10. Typical structure of integrated PEV charger.

III. INTEGRATED CHARGERS

To minimize weight, volume, and cost integrating the charging function into the electric drive system has been proposed [93]–[95]. Charger integration was first developed in 1985 [23] and patented by Rippel and Cocconi in 1990, 1992, and 1994 [24], [96], [97]. The function can be integrated if charging and traction are not simultaneous. In an integrated charger, motor windings are used for filter inductors or an isolated transformer and the motor drive inverter serves as a bidirectional ac–dc converter. The most important advantage is that low-cost high-power (Levels 2 and 3) bidirectional fast charge can be supported with unity power factor. Control complexity and extra hardware are challenges to implementation in commercial products. A combined motor drive and battery recharge system based on an induction motor is currently used by the Ford Motor Company. A nonisolated integrated charger based on a split-winding ac motor will be used in the automotive industry [97], [103]. There are some applications for electric scooters and two-wheeled vehicles [99]. A typical integrated charger system is shown in Fig. 10.

A. Classifications of Integrated Battery Chargers

Integrated charger topologies may be categorized on the basis of motor count and inverter count [21], [24], [98], [99]. The solution patented by Rippel and Cocconi in 1992 uses two independent inverters with two induction motors [98]. Each motor can be controlled by its dedicated inverter [100]. In [101], Tang and Su designed two inverters to drive the main and auxiliary motors, and used them as an ac–dc converter for charging, while two three-phase motors were used as inductors for the converter with their neutral points connected to the grid. In [98], this topology is used for plug-in hybrids. The first machine plays a role in delivering regenerative energy to the battery by supplementing the driving force as a traction motor. The second machine starts up the engine or charges the battery. In the charging mode, both motors and inverters operate as an ac–dc boost converter. Disadvantages of this charger are the large number of extra components (twelve power switches, three contactors, and two motors) and control complexity. A two-motor/two-inverter integrated charger is discussed in [98], [100], and [101] and shown in Fig. 11.

Rippel and Cocconi [96] also proposed one induction motor with a double set of stator windings comprising two motor halves. The operational principle is the same as the two-motor and two-converter configuration. Cost is saved and weight is less than in conventional chargers, but the arrangement still requires twelve power switches, three contactors, and the special double-winding machine.

1) One-Motor With One-Power Converter Topology: With one motor and one power converter, an integrated topology may be classified by motor type: induction [24], [96], [102], permanent magnet (PM) [61], [99], [103], and

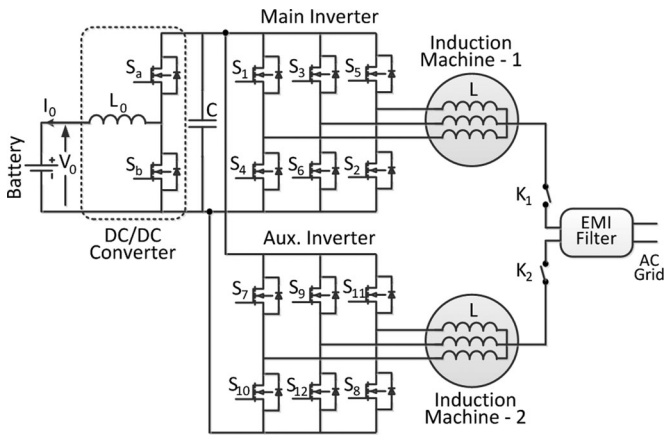

Fig. 11. Integrated charger with two motors and two inverters as presented in [98], [100], [101].

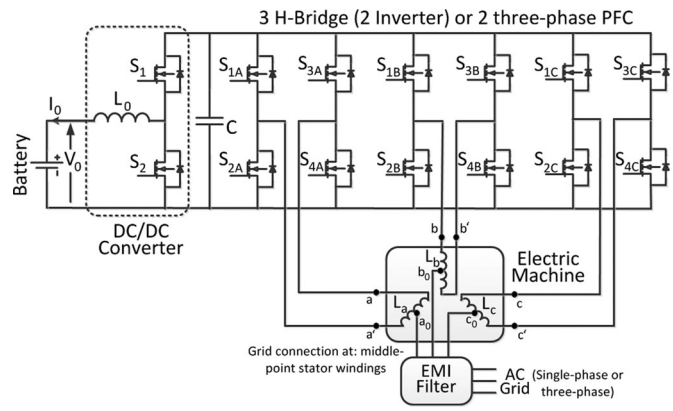

Fig. 12. PM nonisolated integrated charger topology presented in [61], [93], [100], [108], connecting to the grid through midpoints of electric machine windings.

switched-reluctance motor (SRM) [25], [104], with isolated or nonisolated circuitry.

a) Nonisolated/Isolated Cases for Induction Motors: Five nonisolated cases for induction motors have been reported. Nonisolated chargers tend to minimize size and weight. Two of these cases were proposed by Ripple in 1990 [24], in which each employs a three-phase ac motor with an inverter in traction mode. In the second, the three-phase motor and inverter together operate as an ac–dc boost converter, and the dc link voltage is stepped down to the nominal battery voltage through a bidirectional dc-dc converter [98]. This one-motor inverter system is simpler to control than other topologies. In [102], a third arrangement is introduced. It accesses the motor center tap to use the motor as a coupling inductor [102]. An integral PFC charger is formed with four three-phase induction motors and their inverters. There is no extra hardware except a transfer switch. However, this integrated charger is only appropriate for vehicles with four-wheel drive. In the fourth topology, a three-level dc–dc boost converter is used as a front end for a two-wheeled vehicle [105]. The front end is employed as a bidirectional converter to boost the dc-link voltage and capture regenerative braking in motoring mode. It is rearranged to act as a PWM-PFC charger in charging mode. A fifth example is a nonisolated single-phase integrated battery charger proposed in [94]. It has been installed on an electric scooter prototype and uses the propulsion inverter with an additional power rectifier and an *LC* filter. These are placed close to the motor. The on-board dc–dc converter consists of the three-phase motor windings and inverter switches.

An isolated charger based on an induction motor is proposed for a lift truck in [106]. The induction machine is used as a line-frequency step-down isolation transformer in charge mode. A wound-rotor machine is used and the drive is modified to act as a three-phase PWM rectifier. Advantages include galvanic isolation, the possibility of bidirectional power flow, low harmonic distortion, and unity factor. Disadvantages include high magnetization currents and the extra costs of the wound rotor and contactors.

b) Nonisolated/Isolated Cases for Permanent Magnet Motors: A PM nonisolated topology proposed in [61], [95], [107] connects the vehicle to the grid through the machine windings. The configuration of the integrated charger discussed in [61], [93], [100], and [108] is shown in Fig. 12. Each phase is connected to two parallel PWM boost converters. The grid is connected to center taps in each phase, splitting the currents into equal and opposite portions. This cancels the MMF on the stator and ensures magnetic decoupling between the rotor and the stator. No rotation is possible. However, this topology is complex as it must control three independent currents [108]. A second concept for fast on-board charging is proposed in [93]. It uses the PM motor as a filter. The same converter is used both for charging and traction. The structure of this converter is similar to a typical three-phase PFC. The topology is composed of two three-phase PWM boost converters and a buck–boost dc–dc converter. A third and similar topology is applied in [99] to a scooter with an interior permanent magnet (IPM) motor traction drive as shown in Fig. 13. For charging, the ac motor drive is operated as a three-phase PFC coupled boost rectifier. No additional filtering is needed since the PWM ripple is minimized by means of phase interleaving. Using a general model of a three-phase ac motor, the feasibility of an integral charger with other ac motors is also discussed in [99]. Disadvantages include the need for extra hardware, which includes a single-phase rectifier bridge with a mechanical switch to access the center tap of the motor, a capacitor, and an EMI filter. A PM-assisted synchronous reluctance machine has been designed [109] with a special winding configuration. It is a four-pole machine with a three-phase winding in traction mode. Each phase winding is divided into two equivalent parts which are shifted symmetrically around the stator periphery in charging mode. Basically, two three-phase windings, shifted 30 electrical degrees, function during charging.

To overcome isolation safety problems, various possibilities have been investigated with an emphasis on an electric machine configuration with an extra set of windings. An isolated high-power integrated charger based on an IPM synchronous motor with a double set of stator windings is described in [103]. The main idea is to introduce a multiterminal motor/generator set, to perform as a motor in traction mode and an isolated generator

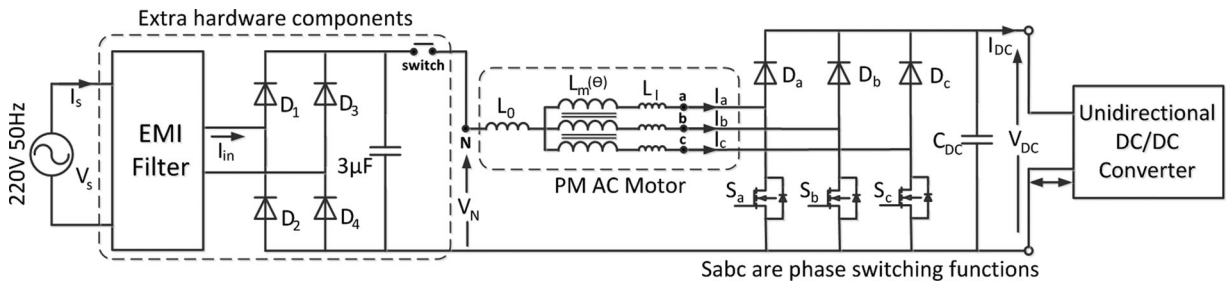

Fig. 13. Integrated battery charger as in [95]: the traction drive is transformed into a three-phase PFC boost battery charger for a scooter.

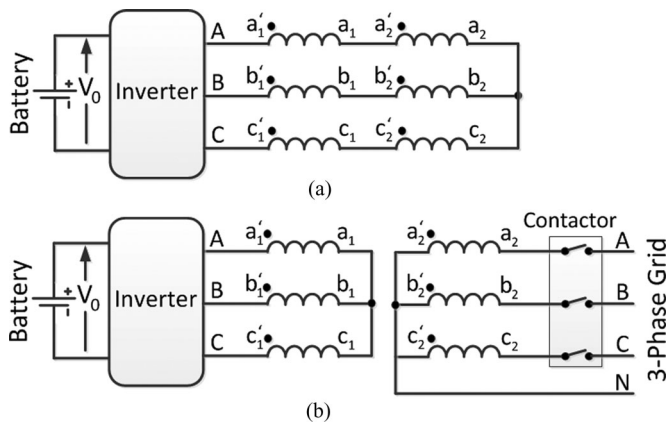

Fig. 14. Operation modes of an integrated charger presented in [103] for internal PM machine: (a) traction and (b) charging.

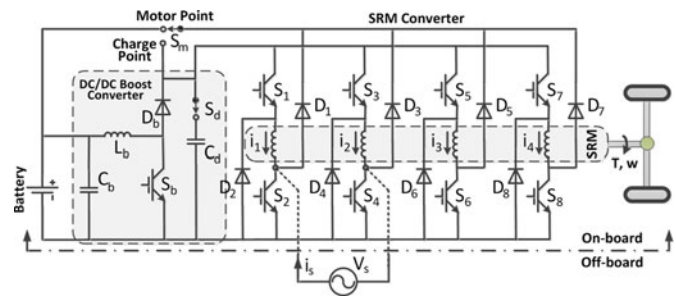

Fig. 15. Integrated battery charger configuration for SRM as presented in [25].

and transformer during charging mode. The traction inverter acts as a rectifier for charging. The device is equipped with two sets of three-phase windings, and the winding connections can be reconfigured from traction mode to charging mode with a relay. A contactor is used to connect the grid-side windings to the grid, as shown in Fig. 14. This charger serves as an isolated high-power bidirectional fast charger with unity power factor. A single-phase solution is also possible. Due to possible machine rotation in charge mode, a clutch is needed to disconnect the motor from the mechanical system.

An induction machine can be used with same principles of operation as a PM machine. In this case, the motor will not rotate at the synchronous speed. If the machine is kept in standstill as in [106], the magnetization current is high due to the air gap and this may limit system efficiency. Another option is to use an extra winding on one phase of the stator to support transformer operation for a single-phase ac supply. In this case, the stator will have asymmetric windings, and the motor acts as a stationary gapped transformer with no rotation during the charge cycle [21].

c) Nonisolated/Isolated Cases for Reluctance Motors: Three reluctance machine topologies are proposed in [25], [104], [110]. In [25], Chang and Liaw present a compact battery-powered SRM drive for an EV with voltage boosting and on-board PFC charging capabilities, as shown in Fig. 15. Although the boost front-end dc–dc converter is external, the on-board charger is formed by the embedded components of the SRM windings and converter. During demagnetization of each leg, the stored winding energy is recovered to the battery. In charging mode, the power devices are used to form a buck–boost rectifier to charge from the utility with good power quality. Barnes and Pollock used SRM phase windings as a transformer during charging in [104], but without active PFC control. In [110], Haghbin *et al.* used an extra winding on one phase of the stator to support transformer operation for a single-phase ac supply with an SRM. The rotor position will automatically align to maximum inductance over the first few cycles in charging mode. The extra winding can adjust the voltage level according to converter requirements. Table V summarizes integrated battery chargers and comparisons.

IV. Contactless Inductive Charging

Conductive chargers use metal-to-metal contact as in most appliances and electronic devices. Inductive charging of EVs is based on magnetic contactless power transfer [111]–[113].

A. Conductive Charging

Conductive charging systems use direct contact and a cable between the EV connector and charge inlet [26]. The cable can be fed from a standard electrical outlet (Level 1 or 2) or a charging station (Level 2 or 3). There are already several charging posts on the market. Available vehicles, including the Chevrolet Volt and Tesla Roadster, use Levels 1 and 2 chargers with basic infrastructure (convenience outlets). Conductive charging is also employed on the Nissan Leaf and Mitsubishi i-MiEV, which use either basic infrastructure or dedicated off-board chargers [64], [114]–[116]. The main drawback of this solution is that the driver needs to plug in the cable. This is a conventional issue.

TABLE V
SUMMARY OF INTEGRATED BATTERY CHARGER TOPOLOGIES AND COMPARISONS

Integrated Charger Configurations	Example Refs.	Applications	Electric Machine Type	Isolated or Non-isolated	Requirements and Extra Hardware	Advantages	Disadvantages
Two motors with power converters	**[21] [24] [98] [99] [100] [101]**	- Electric vehicles - Plug-in hybrid electric vehicles	Induction motors	Non-isolated	- 2 motors (Main and aux. motor) - 2 inverters and control circuits - 12 power switches and their gate circuits - 3 contactors or relays - Capacitor	- Cost saved and weight is less than conventional chargers - No independent ac/dc converter - High-power on-board charging - No extra filter inductors - High-power bidirectional charge - Unit power factor operation - Each motor can be connected to the wheel directly, eliminating transmission and differential.	- Control complexity - Extra hardware requirements - Cost is higher than other integrated chargers.
One motor with two power converter	**[21] [23] [96] [97] [100]**	- Electric vehicles - Plug-in hybrid electric vehicles	Induction motor	Non-isolated	- 2 dedicated inverters and control circuits - 12 power switches and their gate circuits - 3 contactors or relays - Capacitor - Double set of stator windings	- Cost, volume and weight are less than two motors with power converters and conventional chargers - No independent ac/dc converter - High power on-board charging - Unit power-factor operation - No extra filter inductors - High-power bidirectional charge	- Control complexity - Extra hardware requirements - Cost is higher than one motor with one power-converter topology.
One motor with one power converter	**[24] [94] [98] [102] [105]**	- Electric vehicles - Plug-in hybrid electric vehicles - Four-wheel drive - Two-wheeled vehicles - Electric scooter - Fork lift truck	Induction Motor	Non-isolated	- Extra contactors - Mechanical lock - Additional rectifier - Mechanical switch to access the center tap of motor - Capacitor - Clutch needed to disconnect the motor from the mechanical system.	- System control is simpler than other two topologies. - Size and weight is less than other two topologies. - No independent ac/dc converter - Uses motor inverter (6 switches) - No additional filtering is needed. - High-power bidirectional fast charge - Single-phase solution is possible. - Unit power factor operation - Galvanic isolation	- High magnetization currents - Extra costs of wound rotor induction motor - Center-tapped stator windings are needed. - Special winding configuration for isolation - Measurement of rectified voltage
	[106]			Isolated			
	[61] [93] [100] [107] [108]		Permanent Magnet Motor	Non-isolated			
	[103]			Isolated			
	[25] [110]		Switched Reluctance Motor	Non-isolated			
	[104]			Isolated			

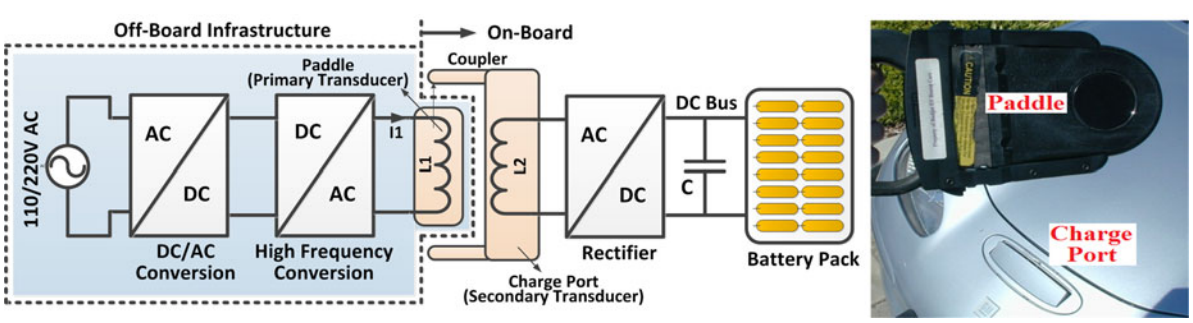

Fig. 16. Typical inductively coupling stationary EV battery charging and GM EV1 system.

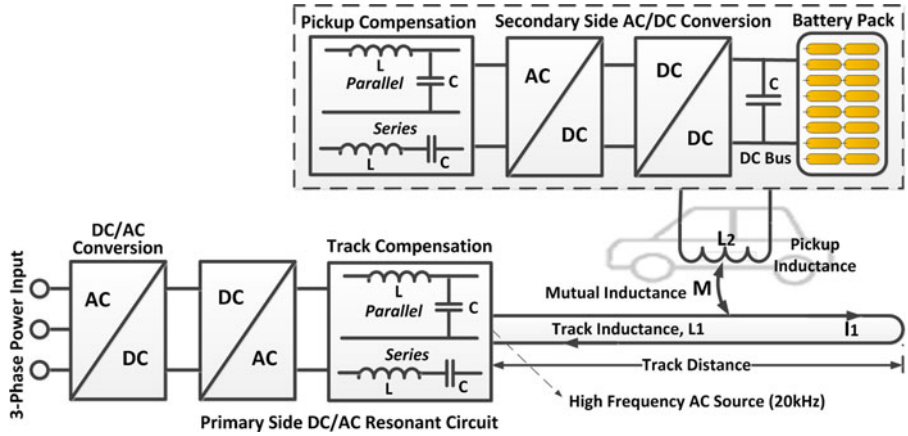

Fig. 17. Inductively coupling roadbed EV battery charging system.

B. Inductive Charging

An inductive charger transfers power magnetically. This type of charger has been explored for Levels 1 and 2 devices. A recommended practice for EV inductive charging was published by the SAE in 1995 [60]. The clear advantage of contactless charging is its convenience for the user. Instead of deep-cycling the battery, the vehicle battery can be topped off frequently while parked at home or at work, when shopping and even at traffic lights. Cables and cords are eliminated. Advantages include convenience and galvanic isolation [117]–[119]. It is also possible to build charging strips into highways which enables charging while driving. Therefore, inductive charging could strongly reduce the need for a fast-charging infrastructure. Disadvantages include relatively low efficiency and power density, manufacturing complexity, size, and cost [120]–[124]. Given that energy savings is an important motivator for EVs, the extra power loss is an important consideration. Basic principles of inductive power transfer (IPT) are similar to transformers, although most versions have poor magnetic coupling and high leakage flux. The secondary side may be stationary [28], [30] or moving (roadbed charging) [31]–[33], [125]. Typical stationary and roadbed IPT charging systems are represented in Figs. 16 and 17.

1) Stationary Inductive Charging: Stationary inductive charging employs primary and secondary transducers. In the version originally developed for the EV1 (see Fig. 16) [126], the primary transducer is a paddle and the secondary transducer is a vehicle charge port. When the paddle is inserted into the charge port, a magnetic circuit forms and power is transferred through a high-frequency link converter. Power transfer levels of typical systems vary from 0.5 W to 50 kW with air gaps of 1–150 mm [27]–[29]. One of the first commercially available inductive couplers was developed by Delco Electronics [127] and applied to the General Motor EV1 system. The main advantage of that approach was the fact that a higher number of turns could be used to maximize the magnetizing inductance of the transformer and hence minimize requirements on the medium power converter to supply magnetizing current. Stationary inductive charging methods have better coupling, tuning, lateral alignment, and higher efficiency than contactless moving-roadbed EV charging methods.

A single-stage high-power-factor converter can be used for inductive Level 1 charging. An alternative is to use a two-stage power converter that can be any one of a number of different types of resonant and PWM converters [128]–[130]. Due to high peak currents, two-stage approaches dominate for inductive Level 2 charging. Other topologies with a high-frequency resonant current link have been used for both the power transmitter and receiver to compensate coils and support efficient power transmission [30]. To meet distortion standards, an active front end is likely for Levels 2 and 3 inductive charging [131]–[133].

2) Contactless Roadbed EV Charging: Inductive charging systems have been considered for roadway contactless power transfer [31]. The vehicle can be moving or stationary. Contactless moving-roadbed EV charging can be used for battery weight and size reduction. Constraints on vehicle energy storage can be relaxed with roadbed charging systems since a portion of the operational power is delivered from the roadbed [134], [135]. This type of system transfers power from a stationary primary source (track or loop) embedded below the pavement surface to one or more secondary loops (pickup) installed in a moving vehicle as shown in Fig. 17. In [136] and [137], the authors propose powering EVs while in motion to address the inherent compromise that on-board energy storage imposes on EV range and availability. High power can be transferred with perfect alignment and tuning. There have been several proposed methods for increasing the tolerance of IPT to lateral movement [138]–[142] or other position errors, as well as to the inherent large air gap. Configurations that include a long wire loop [143], [144], sectional loops [125], and spaced loops [145] have been presented in the literature. The spaced-loop geometry improves the coupling coefficient and overall system efficiency, while minimizing the magnetization current, supply voltage ratings, and stray fields [47]. Challenges of roadbed charging include high power ratings, poor coupling [146], [147], high supply-voltage requirements [121], loop losses, high magnetization current due to loose coupling [32], [135], lateral misalignment [148], [149], the large air gap [150], and stray field coupling.

A 1.5-kW H-shaped-core transformer suited for EV IPT is proposed in [151]. Methods have used a bogie on a track or inductive devices installed in pavement [149], [152]. By

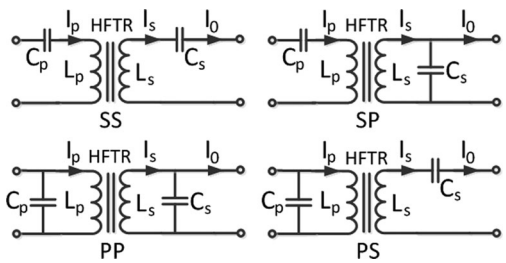

Fig. 18. Basic compensation topologies (SS, SP, PS, PP).

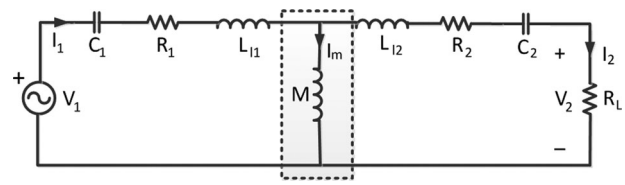

Fig. 19. Circuit model of transformer with SS compensation, as in [125].

using slim primary ferrite core bars, efficiency can be improved, but cost must be taken into consideration when magnetic components are built into the primary track [153]. A sectional track IPT system for moving vehicles is proposed and studied in [125] for increasing power efficiency. Much higher efficiencies have been reported for inductive chargers in stationary applications [148]–[150]. Sallan *et al.* [154] described a design process to select the parameters of a coreless inductively coupled power transfer (ICPT) device with a large air gap that delivers high power efficiently. A polarized coupler called a *double-D-quadrature* (DDQ) is introduced and optimized in [27]. The DDQ produces a flux-path height twice that of a circular pad along a single-sided flux path. It has the potential to support cost-effective ICPT designs.

Madawala and Thrimawithana [155] described a novel contactless power interface, which is based on IPT technology and suitable for bidirectional power transfer between a common dc bus and multiple electric or hybrid vehicles. The proposed bidirectional contactless power-transfer concept is viable and can be used in applications such as V2G systems to charge and discharge electric or hybrid vehicles to the power grid.

3) Resonant and Compensation Circuit Topologies: Resonant circuits are normally employed in inductive charging networks to maximize power transfer capability while minimizing power-supply voltage and current ratings. To deliver the required power with small devices, it is necessary to operate at high frequency [27]–[29]. To supply the necessary real power efficiently, series or parallel reactive compensation is required for both the primary and secondary sides of an inductive charger [156], [157] as shown in Fig. 18. Conventional compensation circuit topologies are not suitable for application to EVs because of the high power level, long air gap, and need for low sensitivity to misalignment [30]. For inductive charging, among the most critical parameters are the frequency range, the low magnetizing inductance, the high leakage inductance, and any capacitance needed to set up resonance and support reactive power requirements [28], [29]. The series–series (SS) high-frequency resonant topology has been established as a good solution because its resonant circuit can be designed independently of the coupling [30], [158]. An electric circuit model of the SS system discussed in [30], [125] is shown in Fig. 19. Both primary and secondary windings are series-compensated to keep the efficiency high.

Parallel–parallel (PP) topologies for both the transmitter and receiver have higher impedance and can be driven more easily than SS topologies [30], [111]. A novel receiver circuit topology for a cordless EV charger is proposed in [30]. Compared to a PP circuit, the parallel–parallel–series (PPS) circuit in [30] improves the power factor. A PPS circuit allows a larger gap between the transmitter and receiver coils [111]. Wang *et al.* [156] proposed a design of the primary resonant circuit that mitigates effects of phase or frequency shifts. Kutkut [159] proposed a full-bridge *LCL* resonant battery charger that uses circuit parasitics to achieve soft switching. The EMI performance is improved and the size of the output filter is reduced. A half-bridge *LLC* resonant converter is proposed in [160] for Level 3 off-board charging. It has advantages such as high efficiency, ability to operate with zero-voltage switching over a wide load range, no reverse recovery losses, and low voltage stress. The drawback is that the desired output voltage is adjusted by the switching frequency, complicating filter, and transformer designs. Sakamato *et al.* [161] proposed an inductive coupler which has sufficient exciting inductance and low leakage inductance at a large air gap length for Levels 1 and 2 charging.

V. Isolation and Safety Requirements for EV Chargers

An isolation need is present in all functions of the EV including the high-voltage battery, dc–dc converter, inverter for driving the electric motor, and also for charger module connected to the grid. Therefore, the key component in the interface between the existing electrical system and the EVSE is the transformer. With on-board or off-board chargers, the EV body must be connected to the earth during charging. When the charger has no electrical separation, isolation monitoring is essential, and the battery must be isolated [162].

Nonisolated dc–dc converters generally have advantages of simple structure, high efficiency, high reliability, low cost, size, weight, etc. However, the nonisolated dc–dc converter stage of the low-frequency approach provides no galvanic isolation. Thus, a line-frequency transformer is needed which galvanically isolates the batteries from the grid. In combination with the line-frequency transformer, this charging station approach results in a large and expensive system mainly because of the required magnetic materials. To reduce the amount of magnetic material and decrease the total volume requirements of the charging station, the operating switching frequency must be increased and the galvanic integrated into the dc–dc stage. The result is a filter with a higher power density. Both the volume and weight are reduced.

Battery chargers often are designed to be used as off-board arrangements because of the large size and high weight resulting

Tesla, Inc.
Ex - 1023
Page 12 of 19

TABLE VI
TECHNICAL CODES AND STANDARDS FOR SAFETY AND ISOLATION

Document Name	Document Title/Section
SAE J-2344	Guide lines for Electric Vehicle Safety
SAE J-2464	EV/HEV Rechargeable Energy Storage System (RESS) Safety and Abuse Testing
SAE J-2910	Design and Test of Hybrid Electric Trucks and Buses for Electrical Safety
SAE J-2929	EV/HEV Propulsion Battery System Safety Standard – Lithium-based Rechargeable Cells
UL 2202	Safety of EV Charging System Equipment
UL 2231	Safety of Personnel Protection Systems for EV Supply Circuits
UL 225a	Safety of Plugs, Receptacles, and Couplers for EVs
NFPA 70E	Electrical Safety in the Workplace
NFPA 70	National Electrical Code (NEC); Article 220, Branch Circuit, Feeder and Service Calculations; Article 625, Electric Vehicle Charging Systems; Article
DIN V VDE V 0510-11	Safety requirements for secondary batteries and battery installations - Part 11
ISO 6469-1:2009 (IEC)	Electrically propelled road vehicles - Safety specifications - Part 1: On-board rechargeable energy storage system (RESS)
ISO 6469-2:2009 (IEC)	Electrically propelled road vehicles - Safety specifications - Part 2: Vehicle operational safety means and protection against failures
ISO 6469-3:2001 (IEC)	Electric vehicles - Safety specifications - Part 3: Protection of persons against electric hazards
IEC TC 69 :	Safety and charger infrastructure•
IEC TCs 64	Electrical installations & protection electric shock

from the required inductors, capacitors, cooling system, and isolating transformer. In high-frequency isolation topology, galvanic isolation is provided in the dc–dc converter stage by a high-frequency transformer. Transformer design is very important to reduce size, cost, and losses. High-frequency transformer isolation also provides voltage adjustment for better control, safety for load equipment, compactness, and suitability for varying applications. The main disadvantage is high snubber losses used to avoid overvoltages across the passive rectifier devices. Additionally, the transformer design/layout influences soft switching, especially in a partial-load condition.

To provide adequate power for Level 2 charging equipment, existing electrical service must be stepped down to a level that can work with Level 2 charging equipment: 208–240 V. If not already available at the site, it will be necessary to install an isolation transformer capable of stepping electricity to 208–240 V for Level 2 charging, or up to 480 V for Level 3 charging. Isolation transformers can cost between $7200 and $8500.

Although galvanic isolation is a favorable option in the charger circuits for safety reasons, isolated on-board chargers are usually avoided due to the cost impact on the system. There is a possibility of avoiding these problems of additional charger weight space and cost by using available traction hardware, mainly an electric motor and inverter, for the charger circuit and thus have an integrated drive system and charger. The charger/converter is a nonisolated version with a reduced number of inductors and current transducers. To overcome the isolation problem, different possibilities are investigated with emphasis on a special electric machine configuration with an extra set of windings.

The requirements for devices or systems intended to reduce the risk of electric shock to the user in grounded or isolated circuits for charging EVs are covered in the standard for personnel protection systems for EV supply circuits [13]. Table VI summarizes some of the applicable technical codes and standards that address safety directly relating to EVs.

VI. Charging Strategies and Effects on Infrastructure Equipment

Effects on distribution infrastructure equipment, economic costs, and emissions from charging depend on EV penetration and charging strategies. Large-scale unbalanced deployment can have a detrimental impact on the electric grid; thus, grid stability becomes a challenging task.

A. Uncoordinated Charging

Uncoordinated charging means that EV batteries either start charging immediately when plugged in or start after a user-adjustable fixed delay and continue charging until they are fully charged or disconnected [163], [164]. This charging system is most likely at Level 1. Uncoordinated charging operations tend to increase the load at peak hours and can cause local distribution grid problems such as extra power losses and voltage deviations that affect power quality. They may lead to overloads in distribution transformers and cables, increased power losses, and reduced reliability and cost effectiveness of the grid [165]. A simulation study in Western Australia showed significant transformer load-surging and voltage deviations, even under low EV penetrations [166]. Load growth on transformers for EV

penetrations from 17% to 31% showed a significant rate of increase in transformer currents. A model study in the Netherlands showed that uncoordinated charging would increase the national peak load by 7% at 30% penetration. This may exceed the capacity of the existing distribution infrastructure [163]. Some utility companies offer a dual tariff (cheap night rates) to EV owners as a way to reduce peak load [167]–[169]. The dual tariff may effectively delay charging. When the user agrees to an adjustable fixed delay, owners can wait for cheap off-peak prices. Off-peak charging takes place during the night when the electricity demand is low and generation is mostly base load [76], [170]. The use of time-variable rates by customers with Levels 2 or 3 charging would help resolve the problem.

B. Coordinated Charging

Coordinated smart charging optimizes time and power demand [171], and reduces daily electricity costs, voltage deviations, line currents, and transformer load surges [165], [172]. A coordinated charging system is more suitable for high-power levels (Levels 2 and 3). Masoum *et al.* [165] investigated the role of charging coordination in improving distribution transformer performance in Western Australia. While the coordination approach is beneficial in overall system load leveling and peak shaving, high EV penetrations (e.g., 63%) may still result in significant increases in individual transformer loads that may exceed their ratings. For better coordination and reliability, the aggregation concept has been proposed to provide viable storage. [173]–[175]. Two-way energy flow and communication between the aggregated vehicles and the grid can be controlled to maintain grid stability [176].

C. Challenges to a Fast-Charging Infrastructure

Fast-charge stations would be located primarily in residential and commercial locations. The existing electric infrastructure may not be adequately designed to satisfy the surge in power demand for the necessary electric service stations in these areas [75], [177]. Depending on EV penetration, vehicle usage schedules, and the desired Level-3 charging level [75], [77] chargers can quickly overload distribution equipment. They increase distribution transformer losses, voltage deviations, harmonic distortion, and peak demand [178]–[180]. This calls for additional investments in larger underground cables and overhead lines, and more transformer capacity [181]. The cost could significantly impact the reliability, security, efficiency, and economy of newly developing smart grids, due to possible loss of transformer life [182], [183]. Degradation in the life of a typical distribution transformer can be reduced considerably by using a controlled charging scheme [184]. With an EV penetration of 50%, transformer life is reduced by 200–300% relative to nonpenetration with uncontrolled charging [185]. Different penetrations of EVs were studied based on transformer insulation life using a thermal model in [186]. The results showed that a large penetration of EVs can have a great impact on to the power grid. The aging rate of low-voltage transformers with high PEV penetration was modeled and simulated in France [187]. It was shown that transformer aging is quadratic in the presence of PEVs. Clement-Nyns *et al.* [188] have shown that if a 30% EV penetration is introduced in the Belgium test grid, the power demand in the grid increases about 10%. This is beyond the range of transformer and conductor capacity. Farmer *et al.* [189] presented an EV distribution circuit impact model to estimate the impact of an increasing number of PEVs on transformers and underground cables.

Without EVs, the standard underground conductor would be sufficient (100 kVA transformer, 4×50 mm^2 conductor, 160 A). If 30% is introduced, the power for the global grid increases to 108 kVA, which is out of range for the 100 kVA transformer. This transformer must be replaced by a standard transformer of 125 kVA to deal with extra EVs, load growth, and additional peak load. The line current increases to 163 A. The conductors must be replaced by a 4×95 mm^2 conductor, 220 A. Voltage drop problems can be tackled by employing a capacitor bank or a load-tap changing transformer, or by using charger reactive-power services [188].

D. Future Trends and Successful Deployment of Infrastructure and EVs

Despite the low environmental impact and high energy efficiency, EVs have not been widely accepted by people to date. The lack of charging infrastructure is one of the reasons. The charging infrastructure requires a major investment on the part of both the government and the private sector. There are some barriers to infrastructure installation such as codes and standards, installation costs, utility infrastructure planning, construction, consumer knowledge, metering, contractor role, permitting procedures, etc. The demand for charging infrastructure is driven by three main factors: penetration rates, degree of charging, and range anxiety. There is considerable uncertainty regarding the impact of the smart grid on EV batteries and EV charging infrastructure.

In the EV world of the future, Levels I and II slow charging will likely be the most used schemes because of convenience and low-cost electricity. Home charging will be important for achieving high rates of EV deployment; public charging is arguably more important for moving past the very early stages of EV adoption. This infrastructure is the most economical because it does not require a wall box. However, as battery capacity and range of EVs are improved, and potentially some EVs in the future would need Level III fast charging to extend the driving range, there is an increased need to build off-board charge station infrastructures. Level III fast charging provides a method to alleviate range anxiety for the driver of passenger EVs. The high cost of installing a rapid-charging infrastructure and the difficulty associated with drawing large amounts of energy from the electricity grid ensure that overnight and standard charging will remain the most common methods for vehicle charging. The need for recharging in the community and on highways—preferably fast charging—is essential for mass commercialization. Constraints on storage and charging problems can be relaxed with inductive roadbed charging systems, since a portion of the operational power is delivered from the roadway.

The extra cost of redundant power electronics is likely to drive continued innovation in integrated charging. Topologies that cannot develop motor torque are probably essential, as extra mechanical complexity will preclude any approach that does. Economic questions, such as data-exchange standards for billing, must be addressed in the future to allow vehicles to charge at flexible locations. With integrated charging, metering and billing data exchange must be built into the vehicle as well. While many observers mention bidirectional chargers, unidirectional configurations support nearly the same functionality without issues of backfeed, safety, and islanding protection [145], [190]. It is likely that unidirectional charging will be the primary avenue for development in the near future, even though many integrated charging configurations support bidirectional energy flow.

The successful deployment of EVs over the next decade is dependent on the following:

1) deploying a charging infrastructure and associated EVSE is perhaps the most important consideration. Necessary parts include conductors, EV connectors, attachment plugs, devices, power outlets, or other apparatus installed specifically for the purpose of safely delivering energy from the premises wiring to the EVs;
2) charger reliability, durability, and safety considerations will contribute to consumer acceptance of EVs;
3) charger efficiency and reducing charger costs;
4) suitability for V2G-bidirectional power flow, communication, and metering;
5) charging systems that can accommodate high-power charging will provide more flexibility and choices to the consumer;
6) charging strategies and setting limits for charging time and access rules;
7) the introduction of internationally agreed upon EV standardization of charging stations. Research institutions, utilities, and the automotive industry should collaborate to establish standards that effectively utilize managed charging programs that would empower EV users while also benefitting the electric power grid. Regulatory procedures and policies for commercial firms in the distribution market are needed;
8) the ease of use of the charger and connector, and how user friendly it is perceived to be by the consumer contributes to the development of a wider market for EVs and acceptance of the technology.

VII. Conclusion

This paper reviewed the current status and implementation of battery chargers, charging power levels, and infrastructure for EVs. Battery performance depends not only on types and design of the batteries, but also on charger characteristics and charging infrastructure. Battery infrastructure and charging power levels are categorized into three types: Level 1, Level 2, and Level 3. Charger systems are categorized into off-board and on-board types with unidirectional and bidirectional power flow. Unidirectional charging limits hardware requirements, simplifies interconnection issues, and tends to reduce battery degradation. Bidirectional charging supports battery energy injection back to the grid. Typical on-board chargers restrict power to meet weight, space, and cost constraints. There is a possibility of avoiding these problems by using the electric drive system as an integrated charger. The most important advantage of integrated chargers is that low-cost high-power (Levels 2 and 3) bidirectional fast charging with unity power factor is supported. The availability of a charging infrastructure reduces on-board energy storage requirements and costs. On-board charger systems can be conductive or inductive. Inductive charging has the long-term promise of supporting active roadbed systems. These are under study by several groups. Various charger power levels and infrastructure configurations were presented and compared, based on the amount of power, charging time and location, cost, suitability, equipment necessary, and other factors. Success of EVs depends on standardization of requirements and infrastructure decisions, efficient and smart chargers, and enhanced battery technologies.

References

[1] M. Ehsani, Y. Gao, S. E. Gay, and A. Emadi, *Modern Electric, Hybrid Electric, and Fuel Cell Vehicles*. Boca Raton, FL: CRC Press, 2005.

[2] A. Emadi, M. Ehsani, and J. M. Miller, *Vehicular Electric Power Systems: Land, Sea, Air, and Space Vehicles*. New York: Marcel Dekker, 2003.

[3] J. Larminie and J. Lowry, *Electric Vehicle Technology Explained*. New York: Wiley, 2003.

[4] A. Y. Saber and G. K. Venayagamoorthy, "One million plug-in electric vehicles on the road by 2015," in *Proc. IEEE Intell. Trans. Syst. Conf.*, Oct. 2009, pp. 141–147.

[5] J. Beretta, *Automotive Electricity*. New York: Wiley, 2010.

[6] C. C. Chan and K. T. Chau, "An overview of power electronics in electric vehicles," *IEEE Trans. Ind. Electron.*, vol. 44, no. 1, pp. 3–13, Feb. 1997.

[7] M. Rawson and S. Kateley, "Electric vehicle charging equipment design and health and safety codes," California Energy Commission Rep., Aug. 31, 1998.

[8] *Installation Guide for Electric Vehicle Charging Equipment*, Massachusetts Division Energy Resources, MA, Sep. 2000.

[9] M. Doswell, "Electric vehicles—What municipalities need to know," Alternative Energy Solutions Dominion Resources, Inc., Virginia, Feb. 2011.

[10] C. Botsford and A. Szczepanek, "Fast charging vs. slow charging: Pros and cons for the new age of electric vehicles," presented at the 24th Electric Vehicle Symposium, Stavanger, Norway, May 2009.

[11] CHAdeMO Association, "Desirable characteristics of public quick charger," Tokyo Electric Power Company, Tokyo, Japan, Jan. 2011.

[12] T. Anegawa, "Development of quick charging system for electric vehicle," in *Proc. World Energy Congress*, 2010.

[13] D. Aggeler, F. Canales, H. Zelaya - De La Parra, A. Coccia, N. Butcher, and O. Apeldoorn, "Ultra-fast dc-charge infrastructures for EV-mobility and future smart grids," in *Proc. IEEE Power Energy Soc. Innovative Smart Grid Technol. Conf. Europe*, Oct. 2010, pp. 1–8.

[14] Vehicle Technologies Program, U.S. Dept. Energy, Office of Energy and Renewable Energy and the National Renewable Energy Lab, 2011.

[15] B. Singh, B. N. Singh, A. Chandra, K. Al-Haddad, A. Pandey, and D. P. Kothari, "A review of three-phase improved power quality ac–dc converters," *IEEE Trans. Ind. Electron.*, vol. 51, no. 3, pp. 641–660, Jun. 2004.

[16] M. A. Fasugba and P. T. Krein, "Gaining vehicle-to-grid benefits with unidirectional electric and plug-in hybrid vehicle chargers," in *Proc. IEEE Veh. Power and Propulsion Conf.*, Sep. 2011, pp. 1–6.

[17] Y. Lee, A. Khaligh, and A. Emadi, "Advanced integrated bi-directional AC/DC and DC/DC converter for plug-in hybrid electric vehicles," *IEEE Trans. Veh. Technol.*, vol. 58, no. 3, pp. 3970–3980, Oct. 2009.

[18] Y. Du, S. Lukic, B. Jacobson, and A. Huang, "Review of high power isolated bi-directional DC-DC converters for PHEV/EV DC charging infrastructure," in *Proc. IEEE Energy Conversion Congr. Expo.*, Sep. 2011, pp. 553–560.

[19] X. Zhou, S. Lukic, S. Bhattacharya, and A. Huang, "Design and control of grid-connected converter in Bi-directional battery charger for plug-in hybrid electric vehicle application," in *Proc. IEEE Veh. Power and Propulsion Conf.*, Sep. 2009, pp. 1716–1721.

[20] X. Zhou, G. Wang, S. Lukic, S. Bhattacharya, and A. Huang, "Multi-function bi-directional battery charger for plug-in hybrid electric vehicle application," in *Proc. IEEE Energy Conversion Congr. Expo.*, Sep. 2009, pp. 3930–3936.

[21] S. Haghbin, K. Khan, S. Lundmark, M. Alaküla, O. Carlson, M. Leksell, and O. Wallmark, "Integrated chargers for EV's and PHEV's: Examples and new solutions," in *Proc. Int. Conf. Electrical Machines*, 2010, pp. 1–6.

[22] M. Grenier, M. H. Aghdam, and T. Thiringer, "Design of on-board charger for plug-in hybrid electric vehicle," in *Proc. Power Electronics, Machine and Drives*, 2010, pp. 1–6.

[23] D. Thimmesch, "An SCR inverter with an integral battery charger for electric vehicles," *IEEE Trans. Ind. Appl.*, vol. 21, no. 4, pp. 1023–1029, Aug. 1985.

[24] W. E. Rippel, "Integrated traction inverter and battery charger apparatus," U.S. Patent 4 920 475, Apr. 1990.

[25] H. C. Chang and C. M. Liaw, "Development of a compact switched-reluctance motor drive for EV propulsion with voltage-boosting and PFC charging capabilities," *IEEE Trans. Veh. Technol.*, vol. 58, no. 7, pp. 3198–3215, Sep. 2009.

[26] *SAE Electric Vehicle and Plug-in Hybrid Electric Vehicle Conductive Charge Coupler*, SAE Standard J1772, Jan. 2010.

[27] M. Budhia, G. A. Covic, J. T. Boys, and C. Y. Huang, "Development and evaluation of single sided flux couplers for contactless electric vehicle charging," in *Proc. IEEE Energy Conversion Congr. Expo.*, Sep. 2011, pp. 614–621.

[28] K. W. Klontz, D. M. Divan, D. W. Novotny, and R. D. Lorenz, "Contactless battery charging system," U.S. Patent 5 157 319, Sep. 1991..

[29] K. W. Klontz, A. Esse, P. J. Wolfs, and D. M. Divan, "Converter selection for electric vehicle charger systems with a high-frequency high-power link," in *Proc. Rec.24th Annu. IEEE Power Electron. Spec. Conf.*, Jun. 1993, pp. 855–861.

[30] K. Throngnumchai, T. Kai, and Y. Minagawa, "A study on receiver circuit topology of a cordless battery charger for electric vehicles," in *Proc. IEEE Energy Conversion Congr. Expo.*, Sep. 2011, pp. 843–850.

[31] A. W. Green and J. T. Boys, "10 kHz inductively coupled power transfer concept and control," in *IEE Proc. Power Electron. Variable-Speed Drives*, Oct. 1994, pp. 694–699.

[32] J. T. Boys, G. A. Covic, and A. W. Green, "Stability and control of inductively coupled power transfer systems," in *Proc. IEE Electric Power Appl.*, Jan. 2000, pp. 37–43.

[33] P. Sergeant and A. Van den Bossche, "Inductive coupler for contactless power transmission," *IET Elect. Power Appl.*, vol. 2, no. 1, pp. 1–7, Jan. 2008.

[34] *IEEE Standard for Interconnecting Distributed Resources with Electric Power Systems*, IEEE Standard 1547, 2003.

[35] *Power Quality Requirements for Plug-in Vehicle Chargers—Part 1: Requirements*, SAE International Standard J2894, 2011.

[36] *Electromagnetic Compatibility (EMC)—Part 3: Limits—Section 2: Limits for Harmonic Current Emissions*, IEC1000-3-2 Doc., 1995.

[37] *National Electric Code*, National Fire Protection Association, Inc., Quincy, MA, 2002.

[38] C. S. Lee, J. B. Jeong, B. H. Lee, and J. Hur, "Study on 1.5 kW battery chargers for neighborhood electric vehicles," in *Proc. IEEE Veh. Power and Propulsion Conf.*, Sep. 2011, pp. 1–4.

[39] C. Aguilar, F. Canales, J. Arau, J. Sebastian, and J. Uceda, "An integrated battery charger/discharger with power-factor correction," *IEEE Trans. Ind. Elect.*, vol. 44, no. 5, pp. 597–603, Oct. 1997.

[40] F. Musavi, M. Edington, W. Eberle, and W. G. Dunford, "Evaluation and efficiency comparison of front end AC–DC plug-in hybrid charger topologies," *IEEE Trans. Smart Grid*, vol. 3, no. 1, pp. 413–421, Mar. 2012.

[41] W. Frank, M. Reddig, and M. Schlenk, "New control methods for rectifierless PFC-stages," in *Proc. IEEE Int. Symp. Ind. Electron.*, Jun. 2005, pp. 489–493.

[42] O. Garcia, P. Zurnel, A. de Castro, and A. Cobos, "Automotive dc–dc bidirectional converter made with many interleaved buck stages," *IEEE Trans. Power Electron.*, vol. 21, no. 3, pp. 578–586, May 2006.

[43] L. Ni, D. J. Patterson, and J. L. Hudgins, "High power current sensorless bidirectional 16-Phase interleaved DC–DC converter for hybrid vehicle application," *IEEE Trans. Power Electron.*, vol. 27, no. 3, pp. 1141–1151, Mar. 2012.

[44] Y. Jang and M. M. Jovanovic, "Interleaved boost converter with intrinsic voltage-doubler characteristic for universal-line PFC front end," *IEEE Trans. Power Electron.*, vol. 22, no. 4, pp. 1394–1401, Jul. 2007.

[45] P. Kong, S. Wang, F. C. Lee, and C. Wang, "Common-mode EMI study and reduction technique for the interleaved multichannel PFC converter," *IEEE Trans. Power Electron.*, vol. 23, no. 5, pp. 2576–2584, Sep. 2008.

[46] F. Musavi, W. Eberle, and W. G. Dunford, "A high-performance single-phase bridgeless interleaved PFC converter for plug-in hybrid electric vehicle battery chargers," *IEEE Trans. Ind. Appl.*, vol. 47, no. 4, pp. 1833–1843, Jul./Aug. 2011.

[47] D. C. Erb, O. C. Onar, and A. Khaligh, "Bi-directional charging topologies for plug-in hybrid electric vehicles," in *Proc. IEEE Appl. Power Electron. Conf. Expo.*, Feb. 2010, pp. 2066–2072.

[48] B. Singh, B. N. Singh, A. Chandra, K. Al-Haddad, A. Pandey, and D. P. Kothari, "A review of single-phase improved power quality AC–DC converters," *IEEE Trans. Ind. Electron.*, vol. 50, no. 5, pp. 962–981, Oct. 2003.

[49] M. D. Manjrekar, P. K. Steimer, and T. A. Lipo, "Hybrid multilevel power conversion system: A competitive solution for high-power applications," *IEEE Trans. Ind. Appl.*, vol. 36, no. 3, pp. 834–841, May/Jun. 2000.

[50] D. Carlton and W. G. Dunford, "Multilevel, unidirectional AC–DC converters, a cost effective alternative to bi-directional converters," in *Proc. IEEE Power Electron. Spec. Conf.*, 2001, pp. 1911–1917.

[51] M. L. Tolbert and F. Z. Peng, "Multilevel converters for large electric drives," in *Proc. IEEE Appl. Power Electron. Conf.*, Feb. 1998, pp. 530–536.

[52] L. M. Tolbert, F. Z. Peng, and T. G. Habetler, "Multilevel converters for large electric drives," *IEEE Trans. Ind. Appl.*, vol. 35, no. 1, pp. 36–44, Jan./Feb. 1999.

[53] J. Zhao, Y. Han, X. He, C. Tan, J Cheng, and R. Zhao, "Multilevel circuit topologies based on the switched-capacitor converter and diode-clamped converter," *IEEE Trans. Power Electron.*, vol. 26, no. 8, pp. 2127–2136, Aug. 2011.

[54] Y. Du, X. Zhou, S. Bai, S. Lukic, and A. Huang, "Review of non-isolated bi-directional DC–DC converters for plug-in hybrid electric vehicle charge station application at municipal parking decks," in *Proc. IEEE Appl. Power Electron. Conf.*, Feb. 2010, pp. 1145–1151.

[55] X. Ruan, B. Li, Q. Chen, S. C. Tan, and C. K. Tse, "Fundamental considerations of three-level DC–DC converters: Topologies, analyses, and control," *IEEE Trans. Circuits Syst.*, vol. 55, no. 11, pp. 3733–3743, Dec. 2008.

[56] M. Pahlevaninezhad, P. Das, J. Drobnik, P. K. Jain, and A. Bakhshai, "A novel ZVZCS full-bridge DC/DC converter used for electric vehicles," *IEEE Trans. Power Electron.*, vol. 27, no. 6, pp. 2752–2769, Jun. 2012.

[57] *Electric Vehicle Infrastructure Installation Guide*, Pacific Gas and Electric Company, San Francisco, CA, USA, Mar. 1999.

[58] W. Su, H. Eichi, W. Zeng, and M. Y. Chow, "A survey on the electrification of transportation in a smart grid environment," *IEEE Trans. Ind. Inf.*, vol. 8, no. 1, pp. 1–10, Feb. 2012.

[59] M. Duvall, "Charging infrastructure update," in *Proc. Electric Power Res. Inst. (EPRI), CPUC Electric Veh. Workshop*, Mar. 2010.

[60] SAE Electric Vehicle Inductive Coupling Recommended Practice, SAE 5-1773, Feb. 1, 1995.

[61] L. De-Sousa, B. Silvestre, and B. Bouchez, "A combined multiphase electric drive and fast battery charger for electric vehicles," in *Proc. IEEE Veh. Power and Propulsion Conf.*, Sep. 2010, pp. 1–6.

[62] K. Morrowa, D. Karnerb, and J. Francfort, "Plug-in hybrid electric vehicle charging infrastructure review," U.S. Dep. Energy Veh. Technol. Program, Final Rep., 58517, Washington, DC, Nov. 2008.

[63] D. P. Tuttle and R. Baldick, "The evolution of plug-in electric vehicle-grid interactions," *IEEE Trans. Smart Grid*, vol. 3, no. 1, pp. 500–505, Mar. 2012.

[64] Tesla Motors. (2009). "Tesla roadster spec sheet," [Online]. Available: http://www.teslamotors.com/display_data/teslaroadster_specsheet.pdf.

[65] SAE International. (2011, Sep. 8). "SAE's J1772 'combo connector' for ac and dc charging advances with IEEE's help," [Online]. Available: http://ev.sae.org/article/10128

[66] CHAdeMO, "What is CHAdeMO?" (2010). [Online]. Available: http://chademo.com/01_What_is_CHAdeMO.html

[67] M. Thomason, "Plug-in recharge," (2011). Online]. Available: http://www1.eere.energy.gov/vehiclesandfuels/avta/light_duty/fsev/fsev_battery.chargers

[68] Electrification of the Transportation System, MIT Energy Initiative, Cambridge, MA, Apr. 2010.

[69] T. Brown, J. Mikulin, N. Rhazi, J. Seel, and M. Zimring, "Bay area electrified vehicle charging infrastructure: Options for accelerating

consumer," Renewable and Appropriate Energy Laboratory (RAEL), Univ. of California, Berkeley, Jun. 2010.
[70] A. Mathoy, "Definition and implementation of a global EV charging infrastructure, Final Rep.," Brusa Elektronik, Sennwald, Switzerland, 2008.
[71] S. Mehta, "Electric plug-in vehicle/electric vehicle, Status Report," Aug. 2010.
[72] C. B. Toepher, "Charge! EVs power up for the long haul," *IEEE Spectrum*, vol. 35, no. 11, pp. 41–47, Nov. 1998.
[73] C. Weiller, "Plug-in hybrid electric vehicle impacts on hourly electricity demand in the US," *Energy Policy*, vol. 39, no. 6, pp. 3766–3778, 2011.
[74] Illinois Commerce Commission, "Initiative on Plug-in Electric Vehicles, Commonwealth Edison Company, Initial Assessment of the Impact of the Introduction of Plug-in Electric Vehicles on the Distribution System," Dec. 15, 2010.
[75] M. Etezadi-Amoli, K. Choma, and J. Stefani, "Rapid-charge electric vehicle stations," *IEEE Trans. Power Del.*, vol. 25, no. 3, pp. 1883–1887, Jun. 2010.
[76] J. Mullan, D. Harries, T. Braunl, and S. Whitely, "Modelling the impacts of electric vehicle recharging on the Western Australian electricity supply system," *Energy Policy*, vol. 39, pp. 4349–4359, May 2011.
[77] S. Bae and A. Kwasinski, "Spatial and temporal model of electric vehicle charging demand," *IEEE Trans. Smart Grid*, vol. 3, no. 1, pp. 394–403, Mar. 2012.
[78] W. Su, W. Zeng, and M. Y. Chow, "A digital testbed for a PHEV/PEV enabled parking lot in a smart grid environment," in *Proc. Rec. IEEE Innovative Smart Grid Tech. Conf.*, Jan. 2012, pp. 1–7.
[79] A. Foley, I. Winning, and B. Ó Gallachóir, "Electric vehicles: Infrastructure regulatory requirements," in *Proc. ITRN*, 2010, pp. 1–7.
[80] C. C. Grant, "U.S. National electric vehicle safety standards summit, Summary Rep.," Detroit, Michigan, Nov. 2010.
[81] *National Electrical Code*. Quincy, MA: National Fire Protection Association, 1999, Article 625-18.
[82] C. C. Grant, "Fire protection research foundation, second annual electric vehicle safety standards summit, Summary Rep.," Detroit, Michigan, 2011.
[83] G. Y. Choe, J. S. Kim, B. K. Lee, C. Y. Won, and T. W. Lee, "A bidirectional battery charger for electric vehicles using photovoltaic PCS systems," in *Proc. IEEE Veh. Power Propulsion Conf.*, Sep. 2010, pp. 1–6.
[84] M. A. Fasugba and P. T. Krein, "Cost benefits and vehicle-to-grid regulation services of unidirectional charging of electric vehicles," in *Proc. IEEE Energy Convers. Congr. Expo.*, Sep. 2011, pp. 827–834.
[85] E. Sortomme and M. El-Sharkawi, "Optimal charging strategies for unidirectional vehicle-to-grid," *IEEE Trans. Smart Grid*, vol. 2, no. 1, pp. 131–138, Mar. 2011.
[86] J. G. Lozano, M. I. Milanés-Montero, M. A. Guerrero-Martínez, and E. Romero-Cadaval, "Three-phase bidirectional battery charger for smart electric vehicles," in *Proc. Int. Conf.-Workshop Compatibility Power Electron.*, 2011, pp. 371–376.
[87] H. Chen, X. Wang, and A. Khaligh, "A single stage integrated bidirectional AC/DC and DC/DC converter for plug-in hybrid electric vehicles," in *Proc. IEEE Veh. Power Propulsion Conf.*, Sep. 2011, pp. 1–6.
[88] N. Tan, T. Abe, and H. Akagi, "Design and performance of a bidirectional isolated DC–DC converter for a battery energy storage system," *IEEE Trans. Power Electron.*, vol. 27, no. 3, pp. 1237–1248, Mar. 2012.
[89] J. Tomic and W. Kempton, "Using fleets of electric-drive vehicles for grid support," *Power Sources*, vol. 168, no. 2, pp. 459–468, Jun. 2007.
[90] S. B. Peterson, J. F. Whitacre, and J. Apt, "The economics of using plug-in hybrid electric vehicle battery packs for grid storage," *J. Power Sources*, vol. 195, no. 8, pp. 2377–2384, 2010.
[91] A. Brooks and S. H. Thesen, "PG&E and Tesla Motors: V2G grid demonstration and evaluation program," in *Proc. Elect. Veh. Symp.*, 2007, pp. 1–10.
[92] J. S. Kim, G. Y. Choe, H. M. Jung, B. K. Lee, Y. J. Cho, and K. B. Han, "Design and implementation of a high-efficiency on-board battery charger for electric vehicles with frequency control strategy," in *Proc IEEE Veh. Power Propulsion Conf.*, Sep. 2010, pp. 1–6.
[93] S. Lacroix, E. Laboure, and M. Hilairet, "An integrated fast battery charger for electric vehicle," in *Proc. IEEE Veh. Power Propulsion Conf.*, Sep. 2010, pp. 1–6.
[94] L. Solero, "Nonconventional on-board charger for electric vehicle propulsion batteries," *IEEE Trans. Veh. Technol.*, vol. 50, no. 1, pp. 144–149, Jan. 2001.
[95] L. De-Sousa and B. Bouchez, "Combined electric device for powering and charging," Int. Patent WO 2010/057892 A1, 2010.
[96] W. E. Rippel and A. G. Cocconi, "Integrated motor drive and recharge system," U.S. Patent 5099186, Mar. 1992.
[97] A. G. Cocconi, "Combined motor drive and battery charger system," U.S. Patent 5 341 075, Aug. 1994.
[98] D. G. Woo, G. Y. Choe, J. S. Kim, B. K. Lee, J. Hur, and G. B. Kang, "Comparison of integrated battery chargers for plug-in electric vehicles: Topology and control," in *Proc. Electric Mach. Drives Conf.*, 2011, pp. 1294–1299.
[99] G. Pellegrino, E. Armando, and P. Guglielmi, "An integral battery charger with power factor correction for electric scooter," *IEEE Trans. Power Electron.*, vol. 25, no. 3, pp. 751–759, Mar. 2010.
[100] L. Shi, A. Meintz, and M. Ferdowsi, "Single-phase bidirectional ac-dc converters for plug-in hybrid electric vehicle applications," in *Proc. IEEE Veh. Power Propulsion Conf.*, Sep. 2008, pp. 1–5.
[101] L. Tang and G. J. Su, "A low-cost, digitally-controlled charger for plug-in hybrid electric vehicles," in *Proc. IEEE Energy Convers. Congr. Expo.*, Sep. 2009, pp. 3923–3929.
[102] S.-K. Sul and S.-J. Lee, "An integral battery charger for four-wheel drive electric vehicle," *IEEE Trans. Ind. Appl.*, vol. 31, no. 5, pp. 1096–1099, Sep./Oct. 1995.
[103] S. Haghbin, S. Lundmark, M. Alakula, and O. Carlson, "An isolated high-power integrated charger in electrified vehicle applications," *IEEE Trans. Veh. Technol.*, vol. 60, no. 9, pp. 4115–4126, Nov. 2011.
[104] M. Barnes and C. Pollock, "Forward converters for dual voltage switched reluctance motor drives," *IEEE Trans. Power Electron.*, vol. 16, no. 1, pp. 83–91, Jan. 2001.
[105] F. J. Perez-Pinal and I. Cervantes, "Multi-reconfigurable power system for EV applications," in *Proc. Int. Conf. EPE Power Electron. Motion Control*, 2006, pp. 491–495.
[106] F. Lacressonniere and B. Cassoret, "Converter used as a battery charger and a motor speed controller in an industrial truck," in *Proc. EPE*, 2005, pp. 1–7.
[107] L. De-Sousa and B. Bouchez, "Method and electric combined device for powering and charging with compensation means," Int. Patent WO 2010/057893A1, 2010.
[108] A. Bruyère, L. De Sousa, B. Bouchez, P. Sandulescu, X. Kestelyn, and E. Semail, "A Multiphase traction/fast-battery-charger drive for electric or plug-in hybrid vehicles," in *Proc. IEEE Veh. Power Propulsion Conf.*, Sep. 2010, pp. 1–7.
[109] K. Khan, S. Haghbin, M. Leksell, and O. Wallmark, "Design and performance analysis of a permanent-magnet assisted synchronous reluctance machine for an integrated charger application," in *Proc. Int. Conf. Elect. Mach.*, 2010, pp. 1–6.
[110] S. Haghbin, M. Alakula, K. Khan, S. Lundmark, M. Leksell, O. Wallmark, and O. Carlson, "An integrated charger for plug-in hybrid electric vehicles based on a special interior permanent magnet motor," in *Proc. IEEE Veh. Power Propulsion Conf.*, Sep. 2010, pp. 1–6.
[111] J. G. Hayes, M. Egan, J. D. Murphy, S. Schulz, and J. Hall, "Wide load resonant converter supplying the SAE J-1773 electric vehicle inductive charging interface," *IEEE Trans. Ind. Appl.*, vol. 35, no. 4, pp. 884–895, Aug. 1999.
[112] V. Vlatkovic, D. Borojevic, and F. C. Lee, "Soft-transition three-phase PWM conversion technology," in *Proc. Rec. IEEE Power Electron. Spec. Conf.*, 1994, pp. 20–25.
[113] H. Matsumoto, Y. Neba, K. Ishizaka, and R. Itoh, "Model for a three-phase contactless power transfer system," *IEEE Trans. Power Electron.*, vol. 26, no. 9, pp. 2676–2687, Sep. 2011.
[114] Nissan Zero Emission Website. (2010, May 1). *Leaf Specs* [Online]. Available: http://www.nissan-zeroemission.com /EN/LEAF/ specs.html
[115] GM-Volt. (2011). "Latest Chevy volt battery pack and generator details and clarifications," [Online]. Available: http://gmvolt.com /2007/08/29/ latest-chevy-volt-battery-pack-and-generator details-and-clarifications
[116] Mitsubishi Motors. (2009). "Mitsubishi motors to bring new-generation EV i-MiEV to market," [Online]. Available: http://media. mitsubishi-motors.com/pressrelease/e/products/ detail1940.html
[117] C. Mi, "Safely charging EV and PHEV from the electricity grid," Dept. Elect. and Comput. Eng., Univ. of Michigan-Dearborn, Dearborn.
[118] HaloIPT, "The future of electric vehicles: Wireless charging for electric vehicles," (2011). [Online]. Available: http://www.haloipt.com
[119] P. Bauer, "Contactless power transfer: Inductive charging of EV," Master thesis, Delft Univ. Technol., Delft, The Netherlands, Jul. 2010.
[120] G. A. Covic, J. T. Boys, and H. G. Lu, "A three-phase inductively coupled power transfer system," in *Proc. IEEE Ind. Elect. Appl. Conf.*, May 2006, pp. 1–6.
[121] O. H. Stielau and G. A. Covic, "Design of loosely coupled inductive power transfer systems," in *Proc. POWERCON*, 2000, pp. 85–90.

[122] M. Budhia, G. Covic, and J. Boys, "A new IPT magnetic coupler for electric vehicle charging systems," in *Proc. Ind. Electron. Conf.*, 2010, pp. 2487–2492.

[123] J. J. Huh, S. W. Lee, W. Y. Lee, G. H. Cho, and C. T. Rim, "Narrow-width inductive power transfer system for online electrical vehicles," *IEEE Trans. Power Electron.*, vol. 26, no. 12, pp. 3666–3679, Dec. 2011.

[124] H. L. Li, A. P. Hu, and G. A. Covic, "A direct ac–ac converter for inductive power-transfer systems," *IEEE Trans. Power Electron.*, vol. 27, no. 2, pp. 661–668, Feb. 2012.

[125] W. Zhang, S.-C. Wong, C. K. Tse, and Q. Chen, "A study of sectional tracks in roadway inductive power transfer system," in *Proc. IEEE Energy Convers. Congr. Expo.*, Sep. 2011, pp. 822–826.

[126] J. G. Hayes, "Battery charging systems for electric vehicles," *IEE Colloguium on Electr. Vehicles*, 1998, pp. 4/1–8.

[127] R. Severns, E. Yeow, G. Woody, J. Halls, and J. Hayes, "An ultra compact transformer for a l0 kW to 120 kW inductive coupler for electric vehicle battery charging," in *Proc. IEEE Appl. Power Electron. Conf. Expo.*, Mar. 1996, pp. 32–38.

[128] E. X. Yang, Y. M. Yang, G. C. Hua, and F. C. Lee, "Isolated boost circuit for power factor correction," in *Proc. IEEE Appl. Power Electron. Conf. Expo.*, Mar. 1993, pp. 196–203.

[129] M. G. Egan, D. O'Sullivan, J. G. Hayes, M. J. Willers, and C. P. Henze, "Power-factor-corrected single-stage inductive charger for electric vehicle batteries," *IEEE Trans. Ind. Electron.*, vol. 54, no. 2, pp. 1217–1226, Apr. 2007.

[130] D. O'Sullivan, M. Willers, M. G. Egan, J. G. Hayes, P. T. Nguyen, and C. P. Henze, "Power-factor-corrected single-stage inductive charger for electric-vehicle batteries," in *Proc. Rec. IEEE Power Electron. Spec. Conf.*, 2000, pp. 509–516.

[131] J. Hayes, J. Hall, M. Egan, and J. Murphy, "Full bridge, series-resonant converter supplying the SAE J- 1773 electric vehicle inductive charging interface," in *Proc. Rec. IEEE Power Electron. Spec. Conf.*, Jun. 1996, pp. 1913–1918.

[132] J. G. Hayes, C. P. Henze, and R. G. Radys, "Multiple input single-stage inductive charger," U.S. Patent 6 548 985, Apr. 2003.

[133] N. H. Kutkut, D. M. Divan, D. W Novotny, and R. Marion, "Design considerations and topology selection for a 120 kW IGBT converter for EV fast charging," in *Proc. Rec. IEEE Power Electron. Spec. Conf.*, Jun. 1995, pp. 238–244.

[134] M. L. G. Kissin, G. A. Covic, and J. T. Boys, "Estimating the output power of flat pickups in complex IPT systems," in *Proc. IEEE Power Electron. Spec. Conf.*, Jun. 2008, pp. 604–610.

[135] C. E. Zell and J. G. Bolger, "Development of an engineering prototype of a roadway powered electric transit vehicle system: A public/private sector program," in *Proc. IEEE Veh. Technol. Conf.*, May 1982, pp. 435–438.

[136] S. M. Lukic, M. Saunders, Z. Pantic, S. Hung, and J. Taiber, "Use of inductive power transfer for electric vehicles," in *Proc. IEEE Power Energy Soc. Gen. Meeting*, Jul. 2010, pp. 1–6.

[137] Z. Pantic, B. Sanzhong, and S. M. Lukic, "Inductively coupled power transfer for continuously powered electric vehicles," in *Proc. IEEE Veh. Power Propulsion Conf.*, Sep. 2009, pp. 1271–1278.

[138] S. Raabe, G. A. J. Elliott, G. A. Covic, and J. T. Boys, "A quadrature pickup for inductive power transfer systems," in *Proc. IEEE Conf. Ind. Elect. Appl.*, May 2007, pp. 68–73.

[139] J. Murakami, F. Sato, T. Watanabe, H. Matsuki, S. Kikuchi, K. Harakawa, and T. Satoh, "Consideration on cordless power station-contactless power transmission system," *IEEE Trans. Magn.*, vol. 32, no. 5, pp. 5037–5039, Sep. 1996.

[140] F. Sato, J. Murakami, T. Suzuki, H. Matsuki, S. Kikuchi, K. Harakawa, H. Osada, and K. Seki, "Contactless energy transmission to mobile loads by CLPS-test driving of an EV with starter batteries," *IEEE Trans. Magn.*, vol. 33, no. 5, pp. 4203–4205, Sep. 1997.

[141] G. A. Covic, J. T. Boys, M. L. G. Kissin, and H. G. Lu, "A three-phase inductive power transfer system for roadway-powered vehicles," *IEEE Trans. Ind. Electron.*, vol. 54, no. 6, pp. 3370–3378, Dec. 2007.

[142] X. Liu and S. I. Hui, "Optimal design of a hybrid winding structure for planar contactless battery charging platform," *IEEE Trans. Power Electron.*, vol. 23, no. 1, pp. 455–463, Jan. 2008.

[143] J. G. Bolger, F. A. Kirsten, and L. S. Ng, "Inductive power coupling for an electric highway system," in *Proc. IEEE Veh. Technol. Conf.*, Mar. 1978, pp. 137–144.

[144] G. A. J. Elliott, J. T. Boys, and A. W. Green, "Magnetically coupled systems for power transfer to electric vehicles," in *Proc. Int. Conf. Power Electron. Drive Syst.*, 1995, pp. 797–801.

[145] M. Yilmaz, V. T. Buyukdegirmenci, and P. T. Krein, "General design requirements and anaysis of road-bed inductive power transfer system for electric vehicle charging," in *Proc. IEEE Trans. Electrification Conf. Expo.*, Jun. 2012, pp. 1–6.

[146] M. L. G. Kissin, J. T. Boys, and G. A. Covic, "Interphase mutual inductance in polyphase inductive power transfer systems," *IEEE Trans. Ind. Eletron.*, vol. 56, no. 7, pp. 2393–2400, Jul. 2009.

[147] J. T. Boys, G. A. J. Elliot, and G. A. Covic, "An appropriate magnetic coupling co-efficient for the design and comparison of ICPT pickups," *IEEE Trans. Power Electron.*, vol. 22, no. 1, pp. 333–335, Jan. 2007.

[148] R. Mecke and C. Rathge, "High frequency resonant inverter for contactless energy transmission over large air gap," in *Proc. Rec. IEEE Power Electron. Spec. Conf.*, Jun. 2004, pp. 1737–1743.

[149] G. A. J. Elliott, S. Raabe, G. A. Covic, and J. T. Boys, "Multiphase pickups for large lateral tolerance contactless power-transfer systems," *IEEE Trans. Ind. Electron.*, vol. 57, no. 5, pp. 1590–1598, May 2010.

[150] M. Budhia, G. A. Covic, and J. T. Boys, "Design and optimisation of magnetic structures for lumped inductive power transfer systems," in *Proc. IEEE Energy Convers. Congr. Expo.*, Sep. 2009, pp. 2081–2088.

[151] M. Chigira, Y. Nagatsuka, Y. Kaneko, S. Abe, T. Yasuda, and A. Suzuki, "Small-size light-weight transformer with new core structure for contactless electric vehicle power transfer system," in *Proc. IEEE Energy Convers. Congr. Expo.*, Sep. 2011, pp. 260–266.

[152] K. W. Klontz, D. M. Divan, D. W. Novotny, and R. D. Lorenz, "Contactless power delivery system for mining applications," *IEEE Trans. Ind. Appl.*, vol. 31, no. 1, pp. 27–35, Jan./Feb. 1995.

[153] S. Lee, J. Huh, C. Park, N. S. Choi, G. H. Cho, and C. T. Rim, "On-line electric vehicle using inductive power transfer system," in *Proc. IEEE Energy Convers. Congr. Expo.*, Sep. 2010, pp. 1598–1601.

[154] J. Sallan, J. L. Villa, A. Llombart, and J. Fco. Sanz, "Optimal design of ICPT systems applied to electric vehicle battery charge," *IEEE Trans. Ind. Electron.*, vol. 56, no. 6, pp. 2140–2149, Jun. 2009.

[155] U. K. Madawala and D. J. Thrimawithana, "A bidirectional inductive power interface for electric vehicles in V2G systems," *IEEE Trans. Ind. Electron.*, vol. 58, no. 10, pp. 4789–4896, Oct. 2011.

[156] C. S. Wang, O. H. Stielau, and G. A. Covic, "Design considerations for a contactless electric vehicle battery charger," *IEEE Trans. Ind. Electron.*, vol. 52, no. 5, pp. 1308–1314, Oct. 2005.

[157] Y. H. Chao, J. Shieh, C. T. Pan, and W. C. Shen, "A closed-form oriented compensator analysis for series–parallel loosely coupled inductive power transfer systems," in *Proc. IEEE Power Electron. Spec. Conf.*, Jun. 2007, pp. 1215–1220.

[158] H. H. Wu, G. A. Covic, J. T. Boys, and D. J. Robertson, "A series-tuned inductive-power-transfer pickup with a controllable ac-voltage output," *IEEE Trans. Power Electron.*, vol. 26, no. 1, pp. 98–109, Jan. 2011.

[159] N. H. Kutkut, "A full bridge LCL resonant battery charger for an EV conductive coupler," in *Proc. Rec. IEEE Power Electron. Spec. Conf.*, May 1998, pp. 2069–2075.

[160] S. Dusmez, A. Cook, and A. Khaligh, "Comprehensive analysis of high quality power converters for level 3 off-board chargers," in *Proc. IEEE Veh. Power Propulsion Conf.* , Sep. 2011, pp. 1–10.

[161] H. Sakamoto, K. Harada, S. Washimiya, K. Takehara, Y. Matsuo, and F. Nakao, "Large air-gap coupler for inductive charger," *IEEE Trans. Magn.*, vol. 35, no. 5, pp. 3526–3528, Sep. 1999.

[162] S. Y. Kim, H. S. Song, and K. Nam, "Idling port isolation control of three-port bidirectional converter for EVs," *IEEE Trans. Power Electron.*, vol. 27, no. 5, pp. 2495–2506, May 2012.

[163] O. Van Vliet, A. S. Brouwerb, T. Kuramochi, M. van den Broek, and A. Faaij, "Energy use, cost and CO_2 emissions of electric cars," *J. Power Sources*, vol. 196, pp. 2298–2310, 2011.

[164] M. D. Galus, M. Zima, and G. Andersson, "On integration of PHEVs into existing power system structures," *Energy Policy*, vol. 38, no. 11, pp. 6736–6745, Nov. 2010.

[165] M. A. S. Masoum, P. S. Moses, and S. Hajforoosh, "Distribution transformer stress in smart grid with coordinated charging of plug-in electric vehicles," in *Proc. Rec. IEEE Power Energy Soc. Innovative Smart Grid Tech. Conf.*, Jan. 2012, pp. 1–8.

[166] P. S. Moses, M. A. S. Masoum, and S. Hajforoosh, "Overloading of distribution transformers in smart grid due to uncoordinated charging of plug-in electric vehicles," in *Proc. Rec. IEEE Power Energy Soc. Innovative Smart Grid Tech. Conf.*, Jan. 2012, pp. 1–6.

[167] Southern California Edison. (2011). *Rate Information - Residential Rates Electric Vehicles*. [Online]. Available: http://www.sce.com/CustomerService/rates/residential/electricvehicles.htm

[168] DTE Energy. (2010). Plug-In Electric Vehicle Rates. [Online]. Available: http://www.dteenergy.com/residentialCustomers/productsPrograms/electricVehicles/pevRates.html

[169] C. T. Li, C. Ahn, H. Peng, and J. Sun, "Integration of plug-in electric vehicle charging and wind energy scheduling on electricity grid," in *Proc. Rec. IEEE Power Energy Soc. Innovative Smart Grid Tech. Conf.*, Jan. 2012, pp. 1–7.

[170] M. Kintner-Meyer, K. P. Schneider, and R. G. Pratt, "Impacts assessment of plug-in hybrid vehicles on electric utilities and regional US power grids—Part 1: Technical analysis Pacific Northwest National Laboratory," Pacific Northwest National Laboratory, Richland, WA, Tech. Rep., PNNL-SA-61669, 2007.

[171] K. Qian, C. Zhou, M. Allan, and Y. Yuan, "Modeling of load demand due to EV battery charging in distribution systems," *IEEE Trans. Power Syst.*, vol. 26, no. 2, pp. 802–810, May 2011.

[172] P. Fairley, "Speed bumps ahead for electric-vehicle charging," IEEE Spectrum. (2010). [Online]. Available: http://spectrum.ieee.org/greentech/advanced-cars/speed-bumps-ahead-for-electricvehicle-charging.

[173] W. Kempton and J. Tomic, "Vehicle-to-grid power fundamentals: Calculating capacity and net revenue," *J. Power Sources*, vol. 144, no. 1, pp. 268–279, 2005.

[174] C. Guille and G. Gross, "A conceptual framework for the vehicle-to-grid (V2G) implementation," *Energy Policy*, vol. 37, no. 11, pp. 4379–4390, 2009.

[175] A. Aabrandt, P. B. Andersen, A. B. Pedersen, S. You, B. Poulsen, N. O'Connell, and J. Ostergaard, "Prediction and optimization methods for electric vehicle charging schedules in the EDISON project," in *Proc. Rec. IEEE Power Energy Soc. Innovative Smart Grid Tech. Conf.*, Jan. 2012, pp. 1–7.

[176] M. Singh, P. Kumar, and I. Kar, "Implementation of vehicle to grid infrastructure using fuzzy logic controller," *IEEE Trans. Smart Grid*, vol. 3, no. 1, pp. 565–577, Mar. 2012.

[177] S. Hutchinson, M. Baran, and S. Lukic, "Power supply for an electric vehicle charging system for a large parking deck," in *Proc. IEEE Ind. Appl. Soc.*, Oct. 2009, pp. 1–4.

[178] R. C. Green, L. Wang, and M. Alam, "The impact of plug-in hybrid electric vehicles on distribution networks: A review and outlook," in *Proc. IEEE Power Energy Soc. Gen. Meeting*, Jul. 2010, pp. 1–8.

[179] S. S. Raghavan and A. Khaligh, "Impact of plug-in hybrid electric vehicle charging on a distribution network in a smart grid environment," in *Proc. Rec. IEEE Power Energy Soc. Innovative Smart Grid Tech. Conf.*, Jan. 2012, pp. 1–7.

[180] C. Farmer, P. Hines, J. Dowds, and S. Blumsack, "Modeling the impact of increasing PHEV loads on the distribution infrastructure," [Online]. Available: http://www.cems.uvm.edu/~phines/publications/2010/farmer_2010_phev_distribution.pdf, 2010.

[181] J. Lassila, J. Haakana, V. Tikka, and J. Partanen, "Methodology to analyze the economic effects of electric cars as energy storages," *IEEE Trans. Smart Grid*, vol. 3, no. 1, pp. 506–516, Mar. 2012.

[182] A. Shinde, J. Shah, and E. Pisalkar, "Application of PHEVs for smart grid in Indian Power sector," in *Proc. Rec. IEEE Power Energy Soc. Innovative Smart Grid Tech. Conf.*, Jan. 2012.

[183] K. J. Yunus, M. Reza, H. Zelaya-De La Parra, and K. Srivastava, "Impacts of stochastic residential plug-in electric vehicle charging on distribution grid," in *Proc. Rec. IEEE Power Energy Soc. Innovative Smart Grid Tech. Conf.*, Jan. 2012, pp. 1–8.

[184] J. C. Gómez and M. M. Morcos, "Impact of EV battery chargers on the power quality of distribution systems," *IEEE Trans. Power Delivery*, vol. 18, no. 3, pp. 975–981, Jul. 2003.

[185] C. Desbiens, "Electric vehicle model for estimating distribution transformer load for normal and cold-load pickup conditions," in *Proc. Rec. IEEE Power Energy Soc. Innovative Smart Grid Tech. Conf.*, Jan. 2012, pp. 1–6.

[186] Q. Gong, S. M. Mohler, V. Marano, and G. Rizzoni, "Study of PEV charging on residential distribution transformer life," *IEEE Trans. Smart Grid*, vol. 3, no. 1, pp. 404–412, Mar. 2012.

[187] H. Turker, S. Bacha, D. Chatroux, and A. Hably, "Aging rate of low voltage transformer for a high penetration of plug-in hybrid electric vehicles (PHEVs)," in *Proc. Rec. IEEE Power Energy Soc. Innovative Smart Grid Tech. Conf.*, Jan. 2012, pp. 1–8.

[188] K. Clement-Nyns, E. Haesen, and J. Driesen, "The impact of charging PHEVs on a residential distribution grid," *IEEE Trans. Power Syst.*, vol. 25, no. 1, pp. 371–380, Feb. 2010.

[189] C. Farmer, P. Hines, J. Dowds, and S. Blumsack, "Modeling the impact of increasing PHEV loads on the distribution infrastructure," in *Proc. Annu. Hawaii Int. Conf. Syst. Sci.*, 2010, pp. 1–10.

[190] M. Yilmaz and P. T. Krein, "Review of charging power levels and infrastructure for plug-in electric and hybrid vehicles," in *Proc. IEEE Int. Electric Veh. Conf.*, Mar. 2012, pp. 1–8.

Murat Yilmaz (S'97–M'07) received the B.S. degree from the Department of Electrical Engineering, Istanbul Technical University (ITU), Istanbul, Turkey, in 1995, and the M.S. and Ph.D. degrees from the same university, in 1999 and 2005, respectively.

He is currently a Postdoctoral Researcher at the University of Illinois at Urbana-Champaign, Urbana. His research interests include brushless dc motor design and control, power electronic circuit design and simulation, automotive mechatronics, plug-in hybrid and electric vehicles, and solar energy.

Philip T. Krein (S'76–M'82–SM'93–F'00) received the B.S. degree in electrical engineering and the A.B. degree in economics and business from Lafayette College, Easton, PA, and the M.S. and Ph.D. degrees in electrical engineering from the University of Illinois, Urbana.

He was an Engineer with Tektronix, Beaverton, OR, and then returned to the University of Illinois. He holds currently the Grainger Endowed Director's Chair in Electric Machinery and Electromechanics as a Director of the Grainger Center for Electric Machinery and Electromechanics. He published an undergraduate textbook *Elements of Power Electronics* (Oxford, U.K.: Oxford Univ. Press, 1998). In 2001, he helped initiate the International Future Energy Challenge, a major student competition involving fuel cell power conversion and energy efficiency for machines. He holds 11 U.S. patents. He was a Senior Fulbright Scholar at the University of Surrey in the U.K. during 1997–1998. His research interests address all aspects of power electronics, machines, and drives, with emphasis on nonlinear control approaches.

Dr. Krein is a Registered Professional Engineer in IL and OR. He was recognized as a University Scholar in 1999, the highest research award at the University of Illinois. In 2003, he received the IEEE William E. Newell Award in Power Electronics. He is a Past President of the IEEE Power Electronics Society. He is currently an Associate Editor of the IEEE TRANSACTIONS ON POWER ELECTRONICS.