Trials@uspto.gov
Tel: 571-272-7822

Paper 50
Date: April 24, 2023

UNITED STATES PATENT AND TRADEMARK OFFICE

BEFORE THE PATENT TRIAL AND APPEAL BOARD

EDWARDS LIFESCIENCES CORPORATION AND
EDWARDS LIFESCIENCES LLC,
Petitioners,

v.

AORTIC INNOVATIONS, LLC,
Patent Owner.

IPR2022-00193
Patent 10,881,538 B1

Before JOHN G. NEW, JASON W. MELVIN, and RYAN H. FLAX,
Administrative Patent Judges.

NEW, *Administrative Patent Judge*

JUDGMENT
Final Written Decision
Determining Challenged Claims 1–8, 10–18, and 20 Unpatentable
Determining Challenged Claims 9 and 19 Not Unpatentable
35 U.S.C. § 318(a)

Edwards v. Aortic Innovations
U.S. Patent 11,497,634
Edwards Ex. 1119

I. INTRODUCTION

We have jurisdiction to hear this *inter partes* review under 35 U.S.C. § 6. This Final Written Decision is issued pursuant to 35 U.S.C. § 318(a) and 37 C.F.R. § 42.73. For the reasons set forth below, we determine that Petitioners Edwards Lifesciences Corporation and Edwards Lifesciences LLC (collectively "Petitioner") have established by a preponderance of the evidence that challenged claims 1–8, 10–18, and 20 of Patent Owner Aortic Innovations, LLC ("Patent Owner") U.S. Patent No. 10,881,538 B1 (Ex. 1001, the "'538 patent") are unpatentable. However, we also conclude that Petitioner has failed to establish by a preponderance of the evidence that challenged claims 9 and 19 of the '538 patent are unpatentable.

A. Procedural History

On November 12, 2021, Petitioner filed its Petition (Paper 1, "Petition") seeking *inter partes* review of claims 1–20 of the '538 patent. Patent Owner timely filed a Preliminary Response. (Paper 10, "Preliminary Response"). With our authorization, Petitioner filed a Preliminary Reply and Patent Owner filed a Preliminary Sur-Reply. Paper 12 ("Prelim. Reply"); Paper 14 ("Prelim. Sur-Reply"). On April 25, 2022, and pursuant to 35 U.S.C. § 314, we instituted *inter partes* review of challenged claims 1–20 of the '538 patent (Paper 15, "Institution Decision" or "Dec.").

After institution of trial, Patent Owner filed a Response (Paper 24, "PO Resp."), to which Petitioner filed a Reply (Paper 28, "Pet. Reply"), and Patent Owner, in turn, filed a Sur-Reply (Paper 36, "Sur-Reply").

Oral argument was held on December 15, 2022. A transcript of the oral argument is included in the record. (Paper 48, "Hearing Trans.").[1]

B. Related Proceedings

Petitioner identifies as a related matter *Edwards Lifesciences Corp. v. Aortic Innovations LLC*, IPR2021-01527, challenging claims of US 10,792,172 B2 (the "'172 patent"). Pet. 113. The '538 patent is a continuation of the '172 patent. *Id.* Judgment was entered in that *inter partes* review on March 10, 2023. IPR2021-01527, Paper 52. Two additional *inter partes* review proceedings concerning related patents filed by Petitioner were conducted in parallel with this *inter partes* review, *Edwards Lifesciences Corp. v. Aortic Innovations LLC*, IPR2022-01584 (over US 10,857,011 B2) and *Edwards Lifesciences Corp. v. Aortic Innovations LLC*, IPR2022-00034 (over US 10,966,846 B2). Judgment was entered in these *inter partes* reviews on March 24, 2023 and March 28, 2023, respectively. IPR2021-01584, Paper 50; IPR2022-00034, Paper 50. We also note that an additional *inter partes* review of a related patent has

[1] Oral argument was simultaneously heard in this *inter partes* review and in *Edwards Lifesciences Corporation and Edwards Lifesciences LLC v. Aortic Innovations, LLC*, IPR2021-01584, IPR2022-00034 and IPR2022-00193, all of which were conducted in parallel, but not consolidated, with the present proceeding.

been instituted in *Edwards Lifesciences Corp. v. Aortic Innovations LLC*, IPR2022-00556 (over US 10,987,236 B2).

Petitioner and Patent Owner also identify as an additional related matter *Aortic Innovations LLC v. Edwards Lifesciences Corp.*, No. 1-21-CV-01377 (D.Del. Sept. 28, 2021), where Patent Owner asserts, *inter alia*, the '538 patent against Petitioner. Pet. 114; Paper 4, 1; *see also* Ex. 1050 (complaint).

C. Real Parties-in-Interest

Petitioner identifies Edwards Lifesciences Corp. and Edwards Lifesciences LLC, as the real parties-in-interest. Pet. 113. Patent Owner identifies Aortic Innovations, LLC as the real party-in-interest. Paper 4, 1. There is no dispute over the real parties-in-interest in this proceeding.

D. The Instituted Grounds of Unpatentability

Petitioner contends that challenged claims 1–20 of the '538 patent are unpatentable, based upon the following grounds, all of which have been instituted in this proceeding:

Ground	Claim(s) Challenged	35 U.S.C. §	Reference(s)/Basis
I	1, 8–11, 18–20	103[2]	Cribier[3], Walther[4]
II	2–3, 5–7, 12–13, 15–17	103	Cribier, Walther, Cribier '321[5]
III	1–20	103	Spenser[6], Walther
IV	1–8, 10–18, 20	103	Spenser, Spenser II[7]
V	1–8, 10–18, 20	102(e)	Levi[8]

[2] The Leahy-Smith America Invents Act, Pub. L. No. 112-29, 125 Stat. 284 (2011) ("AIA"), amended 35 U.S.C. §§ 102 and 103. Because the challenged claims of the '538 patent have an effective filing date before the effective date of the applicable AIA amendments, we refer to the pre-AIA versions of 35 U.S.C. §§ 102 and 103 this Decision. Our conclusions herein, however, would not change regardless of which version of the Patent Act applies.

[3] A. Cribier et al., *Technique of Transcatheter Aortic Valve Implantation with the Edwards-Sapien® Heart Valve Using the Transfemoral Approach*, 34 HERZ 347–56 (2009) ("Cribier") Ex. 1012.

[4] T. Walther et al., Trans-catheter valve-in-valve implantation: in vitro hydrodynamic performance of the SAPIEN + cloth trans-catheter heart valve in the Carpentier-Edwards Perimount valves, 40 EUR. J. CARDIO-THORACIC SURG. 1120–26 (2011) ("Walther") Ex. 1007.

[5] Cribier, (US 7,585,321 B2, September 8, 2009) ("Cribier '321") Ex. 1045.

[6] Spenser et al. (US 7,510,575 B2, March 31, 2009) ("Spenser") Ex. 1010.

[7] Spenser et al. (WO 2006/005015 A2, January 12, 2006) ("Spenser II") Ex. 1028.

[8] Levi et al. (US 9,393,110 B2, July 19, 2016) ("Levi") Ex. 1008.

Ground	Claim(s) Challenged	35 U.S.C. §	Reference(s)/Basis
VI	1–8, 10–18, 20	103	Levi
VII	1–20	103	Levi, Walther
VIII	1–8, 10–18, 20	103	Levi, Spenser II

Petitioner relies on the Declaration of Nigel Buller, M.D. (Ex. 1003). Patent Owner relies on the Declarations of Stephen J.D. Brecker, M.D. (Ex. 2002; Ex. 2051). We have reviewed the credentials of Petitioners' declarant, Dr. Buller, and Patent Owner's declarant, Dr. Brecker, and consider both to be qualified to provide the opinions for which their testimony has been submitted. *See* Section II.D.6.a below.

E. The '538 Patent

The '538 patent is entitled "Method for Aortic Repair and Aortic Replacement." Ex. 1001, code (54). The '538 patent issued from Appl. No. 17/024,060, which claims priority through a series of continuation and divisional applications to Appl. No. 13/706,896, filed on December 6, 2012. *Id.* at codes (21), (60). The '538 patent also claims priority to Provisional Appl. No. 61/723,446, filed on Nov. 7, 2012, and Provisional Appl. No. 61/567,458, filed on December 6, 2011. *Id.* at code (60).

The '538 patent discloses an endograft device, i.e., a transcatheter heart valve, used for endovascular repair of ascending aortic aneurysms. Ex. 1001, col. 2, ll. 46–48. According to the Specification, none of the devices in clinical use for endovascular repair of ascending aortic aneurysms

"have been designed with the purpose of endovascular repair of multiple types of ascending aortic aneurysms." *Id.* at col. 2, ll. 31–33. The Specification describes a need for a device "that can treat different anatomical variations of ascending aortic aneurysms, create effective proximal and distal seal zones within the aorta, and have a durable valve component, but that also allows for future valve re-interventions." *Id.* at col. 2, ll. 34–38. The '538 patent states that "[a] device is also needed that would allow for treatment of different coronary anatomical variations among the patient population, allow future coronary re-intervention, but that also avoids coronary compression, and enables treatment of possible paravalvular leaks." *Id.* at col. 2, ll. 38–42.

Both parties agree that the challenged claims in this *inter partes* review relate to a method of implanting only the heart-valve component. *See, e.g.*, Pet. 2.

Figure 11 of the ’538 patent is reproduced below:

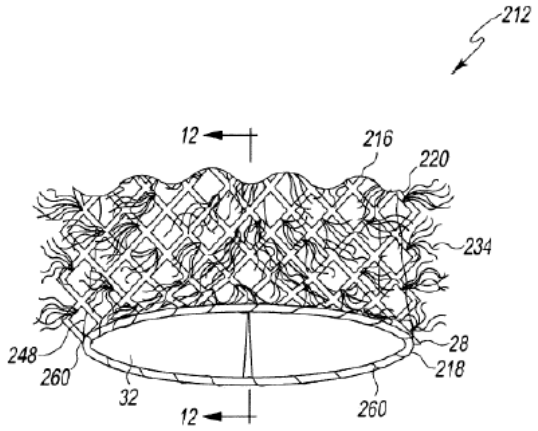

Fig. 11

Figure 11 of the ’538 patent is a perspective view of a proximal end of a prosthetic component 212.

Component 212 includes a dual-frame structure with a circular inner frame 218 secured to circular outer frame 216 (also referred to as “the self-expanding frame 216”) *via* a plurality of stitches 260 (or other fasteners). Ex. 1001, col. 14, ll. 3–15. As depicted above, outer frame 216 is a grid with diagonally oriented struts as compared to the proximal end of the device. The Specification also identifies outer surface 248 of the stent 244, spaced apart from fibers 234, which are attached to outer frame 216. *Id.*

Figure 13 of the ’538 patent is reproduced below:

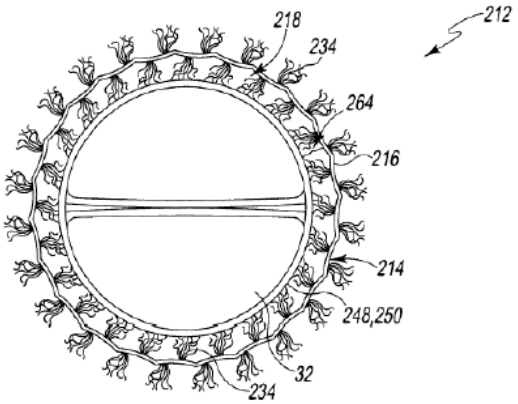

Fig. 13

Figure 13 of the ’538 depicts a plan view of the prosthetic device 212

As illustrated in Figure 13, which is a longitudinal view of component 212, circular dual frame component 214 includes outer frame 216 secured to balloon-expandable inner frame 218. Ex. 1001, col. 13, ll. 35–37. The inner frame 218 houses valve 32. *Id.* at col. 13, ll. 37–38. Fibers 234 extend outwardly and inwardly from outer frame 216. *Id.* at col. 12, ll. 39–44. The Specification states that the illustrated embodiment has gap 264 (2–3 mm) between inner 218 and outer 216 frame/outer surface 248 (gap 264 is closed when component 212 is implanted and fibers 234 create a seal between inner 218 and outer frame 216). *Id.* at col. 14, ll. 10–15.

Figures 11 and 13 further illustrate fibers 234 extending outwardly from proximal section 220 and inwardly into the passageway formed by the stent. Ex. 1001, col. 12, ll. 39–44. According to the Specification, these collagen fibers 234 “aid in preventing paravalvular leaks and migration of

the proximal component 212 within the aortic walls." *Id.* at col. 12, ll. 40–42.

The Specification further describes "[t]he proximal section 220 [of the balloon-expandable frame 218] is embodied as a balloon-expandable tubular stent 244." Ex. 1001, col. 14, ll. 21–22. "[S]tent 244 is tubular and is constructed of a metallic material, such as, nitinol, stainless steel, or other implant grade metallic material, in an open-cell configuration." *Id.* at col. 13, ll. 43–45. "When the inner frame 218 is unexpanded, the outer surface 248 of the stent 244 is spaced apart from the fibers 234 attached to the outer frame 216." *Id.* at col. 14, ll. 10–13, Fig. 13. When inner frame 218 is expanded, outer surface 248 of stent 244 engages fibers 234 through covering material 250, thereby closing gap 264 so that fibers 234 and covering material 250 create a seal between inner frame 218 and outer frame 216. *Id.* at col. 14, ll. 22–29.

F. Representative Claim

Independent claim 1 is representative of the challenged claims and recites:

> 1. A method of implanting a transcatheter aortic valve assembly, comprising:
>
> endovascularly positioning a guide wire through the aortic valve of a patient;
>
> endovascularly positioning the transcatheter aortic valve assembly through the aortic valve of the patient, wherein the transcatheter aortic valve assembly has

a radially compressed orientation and a radially expanded orientation,

wherein the transcatheter aortic valve assembly includes an outer frame, wherein the outer frame is formed from a metallic material and defines an open cell configuration,

wherein the transcatheter aortic valve assembly includes an inner frame that engages a prosthetic heart valve having prosthetic leaflets, wherein the inner frame includes a cylindrically extending graft covering extending at least partially radially outwardly of the prosthetic heart valve and radially inwardly of the outer frame for providing sealing to the prosthetic heart valve,

wherein the outer frame is secured to the graft covering by stitching at a proximal end of the graft covering and at a proximal end of the outer frame,

wherein the transcatheter aortic valve assembly includes a fibrous network positioned at least partially radially outwardly of the outer frame,

wherein the transcatheter aortic valve is positioned so that the fibrous network of the transcatheter aortic valve assembly is in overlapping radial alignment with native valve leaflets of the patient;

inflating a balloon assembly to expand the transcatheter aortic valve assembly from the radially compressed orientation into the radially expanded orientation,

wherein the fibrous network seals against the native valve leaflets of the patient, the outer frame, and the graft covering in response to compression from inflation of the balloon assembly,

> wherein the fibrous network extends over at least two circumferentially extending rows of grids formed in the open cell configuration.

Ex. 1001, col. 21, ll. 15–55.

II. ANALYSIS

A. Level of Ordinary Skill in the Art

Petitioner contends that a person of ordinary skill in the art in November 2012 would have been an interventional cardiologist with a working knowledge of heart valve designs and endovascular prostheses. Pet. 20. Petitioner asserts that such a skilled artisan would, where necessary, work with a medical device engineer to experiment with or manufacture a prosthetic heart valve. *Id.* at 20–21 (citing Ex. 1003 ¶ 45). Patent Owner does not expressly challenge Petitioner's definition. *See generally* PO Resp.

We adopt Petitioner's uncontested definition of a person of ordinary skill in the art as an interventional cardiologist with a working knowledge of heart valve designs and endovascular prostheses, that would, where necessary, work with a medical device engineer to experiment with or manufacture a prosthetic heart valve. We also find that Petitioner's definition is commensurate with the level of skill reflected in the prior art. *See, e.g.*, Exs. 1006, 1010, 1030, 1033; *see also Okajima v. Bourdeau*, 261 F.3d 1350, 1355 (Fed. Cir. 2001).

B. Claim Construction

The Board applies the same claim construction standard that would be used to construe the claim in a civil action under 35 U.S.C. § 282(b). *See* 37 C.F.R. § 100(b) (2020). Under that standard, claim terms "are generally given their ordinary and customary meaning" as understood by a person of ordinary skill in the art at the time of the invention. *Phillips v. AWH Corp.*, 415 F.3d 1303, 1312–13 (Fed. Cir. 2005) (en banc). "In determining the meaning of the disputed claim limitation, we look principally to the intrinsic evidence of record, examining the claim language itself, the written description, and the prosecution history, if in evidence." *DePuy Spine, Inc. v. Medtronic Sofamor Danek, Inc.*, 469 F.3d 1005, 1014 (Fed. Cir. 2006) (citing *Phillips*, 415 F.3d at 1312–17). Extrinsic evidence is "less significant than the intrinsic record in determining 'the legally operative meaning of claim language.'" *Phillips*, 415 F.3d at 1317 (quoting *C.R. Bard, Inc. v. U.S. Surgical Corp.*, 388 F.3d 858, 862 (Fed. Cir. 2004)).

Petitioner argues that no claim terms require additional construction beyond the *Phillips* "ordinary and customary meaning" standard enunciated above. Pet. 21 (citing 37 C.F.R. § 42.100(b); *Phillips*, 415 F.3d 1312–13). Patent Owner does not dispute Petitioner's assertion. *See generally* PO Resp. We consequently apply the claim terms according to their plain and ordinary meaning without express construction. Should any interpretation of claim meaning or scope be required in analyzing the patentability challenges, we discuss it in the related patentability analysis below.

C. Patentability: Principles of Law

To prevail in its challenges to the patentability of claims 1–20 of the '538 patent, Petitioner must demonstrate by a preponderance of the evidence that the claims are unpatentable. 35 U.S.C. § 316(e); 37 C.F.R. § 42.1(d) (2019). "In an [*inter partes* review], the petitioner has the burden from the onset to show with particularity why the patent it challenges is unpatentable." *Harmonic Inc. v. Avid. Tech., Inc.*, 815 F.3d 1356, 1363 (Fed. Cir. 2016); *see also* 35 U.S.C. § 312(a)(3) (2012) (requiring *inter partes* review petitions to identify "with particularity … the evidence that supports the grounds for the challenge to each claim"). That burden of persuasion never shifts to Patent Owner. *Dynamic Drinkware, LLC v. Nat'l Graphics, Inc.*, 800 F.3d 1375, 1378 (Fed. Cir. 2015); *see also In re Magnum Oil Tools Int'l, Ltd.*, 829 F.3d 1364, 1375–78 (Fed. Cir. 2016) (discussing the burden of proof in *inter partes* review).[9]

"A claim is anticipated only if each and every element as set forth in the claim is found, either expressly or inherently described, in a single prior art reference." *Schering Corp. v. Geneva Pharms*, 339 F.3d 1373 (Fed. Cir. 2003) (quoting *Verdegaal Bros., Inc. v. Union Oil Co. of Cal.*, 814 F.2d 628, 631 (Fed. Cir. 1987)). It is well settled that "a reference can anticipate a

---

[9] We address certain of Patent Owner's positions in this proceeding as not persuasive. However, we do not shift the ultimate burden of proof from Petitioner and such lack of persuasiveness is in the context of Petitioner's assertions and the evidence of record.

claim even if it 'd[oes] not expressly spell out' all the limitations arranged or combined as in the claim, if a person of skill in the art, reading the reference, would 'at once envisage' the claimed arrangement or combination." *Kennametal, Inc. v. Ingersoll Cutting Tool Co.*, 780 F.3d 1376, 1381 (Fed. Cir. 2015) (quoting *In re Petering*, 301 F.2d 676, 681 (1962)).

A claim is unpatentable under 35 U.S.C. § 103 as being obvious if the differences between the claimed subject matter and the prior art are such that the subject matter, as a whole, would have been obvious at the time the invention was made to a person having ordinary skill in the art to which said subject matter pertains. *See KSR Int'l Co. v. Teleflex Inc.*, 550 U.S. 398, 406 (2007). The question of obviousness is resolved on the basis of underlying factual determinations, including (1) the scope and content of the prior art; (2) any differences between the claimed subject matter and the prior art; (3) the level of skill in the art; and (4) where in evidence, so-called secondary considerations. *See Graham v. John Deere Co.*, 383 U.S. 1, 17–18 (1966). We also recognize that prior art references must be "considered together with the knowledge of one of ordinary skill in the pertinent art." *In re Paulsen*, 30 F.3d 1475, 1480 (Fed. Cir. 1994) (citing *In re Samour*, 571 F.2d 559, 562 (C.C.P.A. 1978)).

D. Ground IV: Obviousness of claims 1–8, 10–18, and 20 over Spenser and Spenser II

Because we find Ground IV of this *inter partes* review to be dispositive of the issue of the patentability of claims 1–8, 10–12, and 20, we

begin our analysis with this Ground. Under Ground IV, Petitioner argues that challenged claims 1–8, 10–18, and 20 are obvious over the combination of Spenser and Spenser II. Pet. 52–84.

In its Response, Patent Owner contends, with respect to Ground IV, that the claims are not obvious over Spenser and Spenser II because Petitioner fails to demonstrate that any of its proposed prior art combinations disclose or render obvious a valve with a "sealing material" that is delivered "endovascularly." PO Resp. 11. Patent Owner also argues Petitioner fails to prove that any of its combinations disclose or render obvious a "fibrous network" "in overlapping radial alignment with native valve leaflets." *Id.* at 73. Additionally, Patent Owner contends that objective indicia of non-obviousness (also called secondary considerations) support a conclusion that the challenged claims are nonobvious. *Id.* at 2. Finally, Patent Owner contends that the testimony of Petitioner's expert, Dr. Buller, should be given little or no weight, because, Patent Owner argues, he has no expertise in the issues at hand. *Id.* at 90.

1. Overview of Spenser (Ex. 1010)

Spenser is a U.S. patent that issued on March 31, 2009. Ex. 1010, codes (10), (12), (45). On its face, Spenser therefore qualifies as prior art under pre-AIA 35 U.S.C. § 102(b) and this is not in dispute in this proceeding. *See generally* PO Resp.

Spenser is directed to a prosthetic valve for cardiac implantation. Ex. 1010, col. 1, ll. 13–15. Figure 44a of Spenser is reproduced below:

FIG. 44a

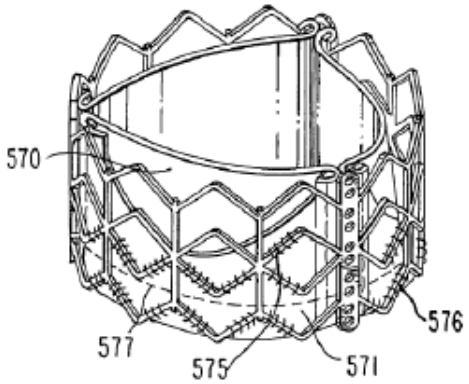

Spenser's Figure 44a illustrates an isometric view of an implantable prosthetic valve with additional pieces of PET used for sealing and protecting the pericardium. *Id.* at col. 11, ll. 32–35. Specifically, Figure 44a illustrates an implantable valve with three pericardial leaflets 570, located within a gridded circular frame 575. *Id.* at col. 26, ll. 30–37.

Figure 44b of Spenser is reproduced below:

FIG. 44b

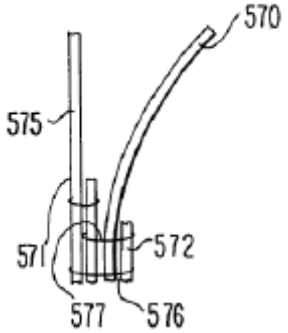

Spenser's Figure 44b illustrates a view of an implantable prosthetic valve including a pre-shaped PET tube and leaflet-tube attachments. Ex. 1010, col. 11, ll. 36–40. Figure 44b illustrates four layers from left to

right, including frame 575, PET layer 571, valve leaflet 570, and PET 572. *Id.* at Fig. 44b, col. 26, ll. 40–42. Spenser teaches that:

> PET **571** and **572** are used for connecting pericardial leaflets **570** to frame **575**, while they are assembled in between the leaflets and the frame. A suture **577** connects pericardium leaflet **570** in between two layers of PET, while the inner layer of PET **572** is short and the outer layer is longer. Bottom attachment suture **576**, connects the three layers, the leaflet and both PET layers to the frame and forms a strong sealing line. An upper suture **578** connects the outer PET layer **571** to frame **575**.

Id. at col. 26, ll. 40–48.

2. Overview of Spenser II (Ex. 1011)

Spenser II is a PCT Publication that published on January 12, 2006. Ex. 1011, codes (10), (43). On its face, therefore, Spenser II qualifies as prior art under pre-AIA 35 U.S.C. § 102(b). This is not disputed. *See generally* PO Resp.

Spenser II is directed to "the prevention, detection, and repair of paravalvular leaks around cardiac valve prostheses." Ex. 1011 ¶ 1. Spenser II teaches that prosthetic valves may be implanted "either through open heart surgery or by use of newer percutaneous methods," but with both methods paravalvular leaks are a known side effect." *Id.* ¶ 11; *see also id.* ¶ 9 (discussing another Spencer reference teaching "crimped devices suitable for catheterization through a body duct to a target location and adapted to be deployed"); *see also* Ex. 1010, Abstract (stating the same for its disclosed invention). Spenser II further notes that "[p]ercutaneous introduction of

medical devices is a preferred surgical procedure" and "considered safer and less invasive." Ex. 1011 ¶ 12.

Figure 22 of Spenser II is reproduced below:

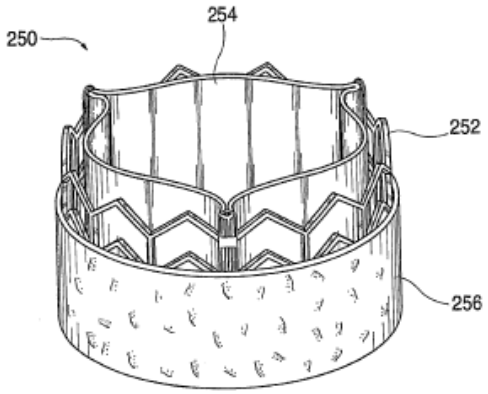

FIG. 22

Spenser II's Figure 22 shows an embodiment including a layer of compressible material, such as a cloth material, along an exterior surface of a stented valve. Ex. 1011 ¶ 85; *see also id.* ¶ 55 (disclosing a preferred embodiment where a compressible material/fabric of PET is provided with fibers around a stent configured to fill gaps, encourage coagulation of blood, and prevent leakage). Specifically, Figure 22 illustrates stented valve 250 including a circular stent structure 252 surrounding a valvular structure 254. *Id.* at Fig. 22, ¶ 144. "[S]tent structure 252 is preferably made of a deformable material, such as stainless steel, adapted for radial expansion using a balloon catheter. The valvular structure 254 forms three leaflets and is illustrated in the open configuration." *Id.* at ¶ 145. The device further includes circular layer of compressible material 256 surrounding the outside of stent structure 252. *Id.* at Fig. 22, ¶ 145. "The material may extend partially around the stent structure or may extend entirely around the stent

structure, such as in the form of a sleeve," and may be formed of PET. *Id.* "[T]he compressible material 256 may resemble a cloth or fabric having small fibers extending from the surface of the material." *Id.* This "compressible material expands after deployment at a treatment site" and "fills the gaps between the stented valve and the surrounding tissue," which "creates a mechanical seal that prevents paravalvular leakage." *Id.* "In one preferred embodiment, the compressible material is formed of polyethylene terephthalate (PET) and has a thickness ranging from about 1 to 5 mm." *Id.*

3. Petitioner's arguments

a. Claim 1

i. *Preamble: "A method of implanting a transcatheter aortic valve assembly"*

Petitioner argues that Spenser discloses a "valve prosthesis for cardiac implantation." Pet. 54 (citing Ex. 1010, col. 1, ll. 13–15). Petitioner asserts that Spenser further discloses "inserting the valve assembly on a delivery device similar to a catheter, then implanting the valve at the desired location *via* a large blood vessel such as the femoral artery[.]" *Id.* (citing Ex. 1010, col. 2, ll. 6–12).

ii. *"endovascularly positioning a guide wire through the aortic valve of a patient"*

Petitioner contends that Spenser discloses endovascularly implanting valves using a "guiding tool," which "comprises a guide wire." Pet. 54 (citing Ex. 1010, cols. 5–6, ll. 17–36, cols. 17–18, ll. 5–43; Ex. 1003 ¶ 191).

By way of example, Petitioner points to Spenser's Figure 16a, which depicts the endovascular positioning of a guidewire 300 through a patient's aortic valve to facilitate valve delivery. *Id.* at 55 (citing Ex. 1010, cols. 17–18, ll. 3–43, Figs. 16a–17b; Ex. 1003 ¶ 191).

iii. *"endovascularly positioning the transcatheter aortic valve assembly through the aortic valve of the patient, wherein the transcatheter aortic valve assembly has a radially compressed orientation and a radially expanded orientation"*

Petitioner argues that Spenser discloses "implanting the valve at the desired location *via* a large blood vessel such as the femoral artery." Pet. 55 (quoting Ex. 1010, col. 2, ll. 6–12, cols. 5–6, ll. 17–36, cols. 17–18, ll. 19–43, Figs. 17a–17b). Petitioner contends that a person of ordinary skill in the art would have known that valves could also be successfully delivered *via* the common iliac artery. *Id.* (citing Ex. 1043).

Petitioner points to Spenser's Figure 4, which "depicts implantable valve deployment in a natural aortic valve position in accordance with the present invention." Pet. 55 (citing Ex. 1010, col. 8, ll. 66–67, col. 14, ll. 15–20, Fig. 4).

Figure 4 of Spenser is reproduced below:

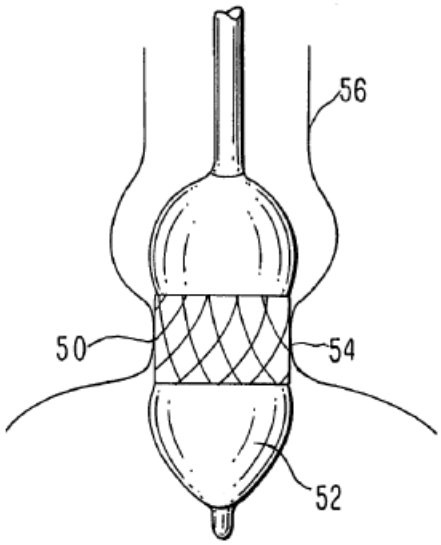

Figure 4 of Spenser depicts implantable valve deployment in a natural aortic valve position

According to Petitioner, Figure 4 of Spenser illustrates the valve assembly positioned through the patient's aortic valve. Pet. 56 (citing Ex. 1003 ¶ 194).

Petitioner argues that a skilled artisan would have been motivated to endovascularly position the valve depicted in Spenser's Figure 44a combined with Spenser II's compressible material through a patient's aortic valve. Pet. 56 (citing Ex. 1003 ¶¶ 196–197). Petitioner argues that paravalvular leakage ("PVL") was a problem known in the art to occur with Petitioner's SAPIEN TAVR, which is similar (if not identical) to the valve depicted in Spenser's Figure 44a. *Id.* (citing Ex. 1003 ¶ 196). Therefore, contends Petitioner, those skilled in the art would have been motivated to

apply Spenser II's known technique for reducing PVL, by adding an outer cloth, to a known device, *viz.*, Spenser's TAVR device. *Id.* at 56–57.

Petitioner contends that the SAPIEN prosthetic valve had been endovascularly positioned through a patient's aortic valve countless times and the FDA had approved the valve for endovascular delivery. Pet. 58 (citing Ex. 1003 ¶ 199; Ex. 1010, col. 2, ll. 5–15, col. 12, ll. 8–36, col. 13, ll. 26–54; Exs. 1032–1033). Petitioner argues that a person of ordinary skill in the art would therefore have felt confident in implanting the device depicted in Spenser's Figure 44a with Spenser II's compressible material within a patient's aortic valve. *Id.* (citing Ex. 1003 ¶ 199).

Furthermore, argues Petitioner, if a skilled artisan wanted to deliver the combined valve through narrower (or more diseased) blood vessels than the common iliac artery, such an artisan would have possessed the skills and equipment necessary to adapt the outer seal or valve for the particular vessel. *Id.* Petitioner points to Spenser's disclosure that the "maximal size of a catheter inserted into the femoral artery should be no more than 8 mm in diameter." *Id.* (quoting Ex. 1010, col. 27, ll. 65–67). According to Petitioner, Spenser's prosthetic valve "has the ability to change its diameter from about 4 mm to about 25 mm." *Id.* (quoting Ex. 1010 cols. 27–28, ll. 67–2). Petitioner asserts that Spenser II's compressible material can have "a thickness ranging from about 1 to 5 mm." *Id.* (quoting Ex. 1011 145).

Therefore, Petitioner contends, a person of ordinary skill in the art would have reasonably expected that adding a compressible material 1 mm thick to Spenser's 4 mm valve would have resulted in a device suitable for

endovascular delivery through the femoral artery because the device's crimped diameter would have been no more than 8 mm. Pet. 58–59 (citing Ex. 1003 ¶ 201).

Finally, Petitioner argues that both Spenser and Spenser II disclose "the transcatheter aortic valve assembly has a radially compressed orientation and a radially expanded orientation." Pet. 59. Petitioner asserts that Spenser discloses that its prosthetic valve "has the ability to change its diameter from about 4 mm [compressed orientation] to about 25 mm [expanded orientation]." *Id.* (quoting Ex. 1010, cols. 27–28, ll. 6–2). Similarly, Petitioner argues, Spenser II discloses valves that comprise "an expandable stent structure" that may be "adapted for radial expansion using a balloon catheter." *Id.* (quoting Ex. 1011 ¶ 144).

iv. *"wherein the transcatheter aortic valve assembly includes an outer frame, wherein the outer frame is formed from a metallic material and defines an open cell configuration"*

Petitioner contends that Spenser's Figure 44a illustrates "an implantable prosthetic valve" that includes "frame 575." Pet. 60 (citing Ex. 1010, col. 19, ll. 5–13, col. 26, ll. 30–34). Petitioner asserts that Spenser teaches that the frame may be made from metallic materials. *Id.* at 61 (citing Ex. 1010, col. 12, ll. 28–31, col. 28, ll. 16–19). Petitioner also argues that Spenser's frame 575 defines an open cell configuration and surrounds the other valve components, making it an "outer frame." *Id.* (citing Ex. 1010, Figs. 44a–44b; Ex. 1003 ¶ 206).

v. *"wherein the transcatheter aortic valve assembly includes an inner frame that engages a prosthetic heart valve having prosthetic leaflets, wherein the inner frame includes a cylindrically extending graft covering extending at least partially radially outwardly of the prosthetic heart valve and radially inwardly of the outer frame for providing sealing to the prosthetic heart valve"*

Petitioner argues that Spenser's Figure 44a includes "additional pieces of PET" for "sealing and protecting the pericardium." Pet. 60 (citing Ex. 1010, col. 26, ll. 30–34, Figs. 44a–44c). According to Petitioner, Spenser discloses that the "pericardium" includes the prosthetic leaflets 570 and PET is a graft covering. *Id.* (citing Ex. 1010, col. 26, ll. 30–54; Ex. 1003 ¶ 208). Petitioner points to its annotated version of Spenser's Figure 44b (reproduced below), arguing that "PET 571 [blue] is positioned "between the leaflets [570 yellow] and frame [575 red]" and engages the leaflets" *Id.* at 60–61 (citing Ex. 1010, col. 26, ll. 3054, Fig. 44a–b).

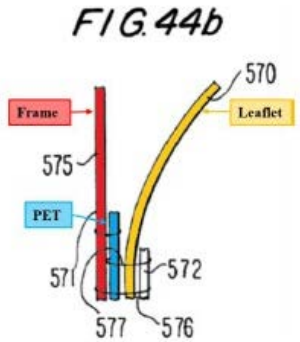

Petitioner's annotated version of Spenser's Figure 44b depicts a cross sectional view of a portion of the inner and outer frame of the prosthetic heart valve, with additional pieces of PET used for sealing and protecting the pericardium

Petitioner contends that PET 571 is "cylindrically extending" and extends radially outwardly of the prosthetic heart valve 570 and radially inwardly of the outer frame 575 for providing sealing to the heart valve. *Id.* Petitioner therefore asserts that, based at least on Patent Owner's statements during prosecution of related patents, PET 571 satisfies the "inner frame" limitations. *Id.* at 62 (citing Ex. 1046, 9, 14, 21–22, 43–44; Ex. 1003 ¶¶ 209–210).

vi. *"wherein the outer frame is secured to the graft covering by stitching at a proximal end of the graft covering and at a proximal end of the outer frame"*

Petitioner contends that Spenser discloses that the proximal end of the inner graft covering is secured to the proximal end of the frame with stitches from suture 576. Pet. 62–63 (citing Ex. 1010, col. 26, ll. 45–47, Fig. 44a–c; Ex. 1003 ¶ 213).

vii. *"wherein the transcatheter aortic valve assembly includes a fibrous network positioned at least partially radially outwardly of the outer frame"*

Petitioner contends that Spenser II discloses the claimed "fibrous network." Pet. 63 (citing Ex. 1003 ¶ 218). According to Petitioner, Spenser II discloses that "[t]o reduce or prevent paravalvular leakage, a layer of compressible material 256 is disposed along an outer surface of the stent structure 252." *Id.* (citing Ex. 1011 ¶ 145, Fig. 22).

Figure 22 of Spenser is reproduced again below:

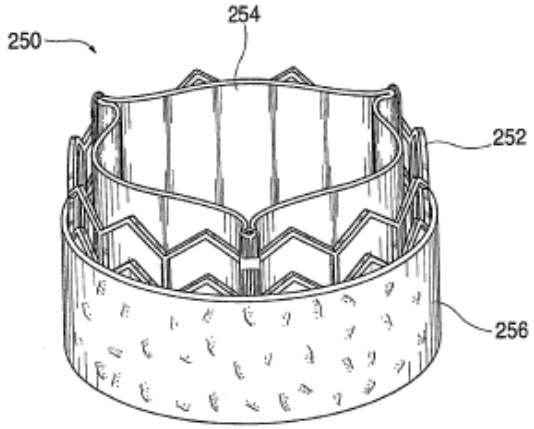

FIG. 22

Spenser II's Figure 22 depicts an embodiment including a layer of compressible material, such as a cloth material, along an exterior surface of a stented valve.

Petitioner notes that Spenser discloses that the compressible material "may resemble a cloth or fabric having small fibers extending from the surface of the material." *Id.* Therefore, Petitioner contends, Spenser II's outer compressible material is a "fibrous network" positioned at least partially radially outward of the outer frame. *Id.* (citing Ex. 1003 ¶ 218).

Petitioner argues that a person of ordinary skill in the art would have been motivated to combine Spenser II's compressible material with Spenser's Figure 44a for a number of reasons. Pet. 64. Petitioner notes that Spenser II expressly discloses combining compressible material with similar (if not identical) heart valves. *Id.* (citing Ex. 1010, col. 26, ll. 30–54, Fig. 44a; Ex. 1011 ¶¶ 144–145, Fig. 22; Ex. 1003 ¶¶ 216, 219). Petitioner emphasizes that both Spenser and Spenser II not only describe similar valves, but also share three common inventors, and Spenser II explicitly

cites to Spenser's parent application, US 2003/0153974 (Ex. 1015). *Id.* (citing, e.g., Ex. 1010, Abstr., col. 2, ll. 5–15; Ex. 1011 ¶¶ 1, 9–14; Ex. 1003 ¶ 219). Petitioner argues that a person of ordinary skill in the art would therefore have reasonably anticipated that the teachings in Spenser II could be reasonably applied to Spenser. *Id.* at 65 (citing Ex. 1003 ¶¶ 216, 219–221). Petitioner also notes that Figure 1 of Spenser (reproduced below) discloses a valve similar to Figure 44a having an outer cuff portion 21 for sealing around the valve and, thus, suggests the combination. *Id.* (citing Ex. 1010, col. 13, ll. 22–25).

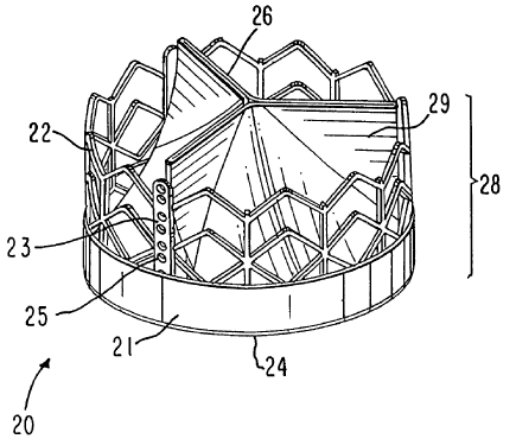

Figure 1 of Spenser depicts a perspective view of an implantable prosthetic valve with cuff portion 21 surrounding a portion of outer frame of stent 22

Petitioner again points out that PVL was known to occur with Petitioner's SAPIEN prosthetic heart valve, which is similar to Figure 44a. Pet. 65 (citing Ex. 1003 ¶ 220). Petitioner asserts that those of skill in the art would have been motivated to combine Spenser II's compressible material with Figure 44a to "address leaks that can occur around the implanted valve"

and "to encourage coagulation of blood to further fill the gaps and prevent leakage." *Id.* (quoting Ex. 1011 ¶¶ 10, 145; Ex. 1003 ¶ 221). Ultimately, argues Petitioner, adding an outer cloth/compressible material to Figure 44a would have merely entailed the combination of known elements (Figure 44a and outer cloth/compressible material) according to known methods (stitching or otherwise attaching) to yield the predictable result of reducing PVL. *Id.* at 65–66 (citing *KSR*, 550 U.S. at 416; Ex. 1003 ¶¶ 216, 220).

Petitioner also argues that a skilled artisan would have reasonably expected success in combining Spenser II's compressible material with Figure 44a. Pet. 66 (citing Ex. 1003 ¶¶ 216, 221). Petitioner asserts that Spenser II discloses how to combine the cloth/material with a heart valve similar (if not identical) to Figure 44. *Id.* Petitioner argues that the structural similarities of the TAVR valves in Spenser and Spenser II would have given those of ordinary skill in the art confidence the cloth/material would work with Figure Spenser's 44a. *Id.* (citing (Ex. 1003 ¶¶ 216, 221).

viii. *"wherein the transcatheter aortic valve is positioned so that the fibrous network of the transcatheter aortic valve assembly is in overlapping radial alignment with native valve leaflets of the patient"*

Petitioner again points to Figure 4 of Spenser (reproduced above), which depicts "valve deployment in a natural aortic valve position in accordance with the present invention." Pet. 67 (also citing Ex. 1010, col. 8, ll. 66–67, col. 14, ll. 15–20, cols. 5–6, ll. 17–36, cols. 17–18, ll. 19–43, Figs. 17a–17b). Petitioner asserts that Figure 4 demonstrates that the valve

overlaps with the patient's aortic annulus. *Id.* (citing Ex. 1003 ¶ 223). Petitioner asserts that the valve also overlaps with the patient's aortic leaflets (not shown), which are attached to the annulus and extend from it distally. *Id.* (citing Ex. 1003 ¶ 223).

Petitioner further asserts that Spenser II's compressible material would cover at least the two proximal rows of Figure 44's outer frame. Petitioner argues that Spenser II's compressible material would be positioned in overlapping radial alignment with the patient's aortic leaflets. Pet. 68.

ix. *"inflating a balloon assembly to expand the transcatheter aortic valve assembly from the radially compressed orientation into the radially expanded orientation"*

Petitioner argues that Spenser discloses that the valve assembly depicted in Figure 44a "resembles the valve shown in Fig. 43." Pet. 68 (citing Ex. 1010, col. 26, ll. 34–35). According to Petitioner, Spenser discloses that the valve shown in Figure 43 may be "inflated by a balloon … [such that] the frame is expanded to the full diameter." *Id.* (citing Ex. 1010, col. 26, ll. 19–22; also citing col. 5, ll. 55–57, col. 6, ll. 30–32, col. 17, ll. 44–46, col. 18, ll. 37–39). Petitioner asserts that Spenser's Figure 44a is also expanded from its compressed configuration with a balloon assembly. *Id.* (citing Ex. 1003 ¶ 226).

Petitioner argues that a person of reasonable skill in the art would have understood that Figure 44a would remain balloon-expandable after adding Spenser II's compressible material, because Spenser II describes

combining the outer cloth/compressible material with balloon-expandable valves. *Id.* (citing Ex. Ex. 1011 ¶ 144; Ex. 1003 ¶ 227).

x. *"wherein the fibrous network seals against the native valve leaflets of the patient, the outer frame, and the graft covering in response to compression from inflation of the balloon assembly"*

Petitioner argues that that Spenser II discloses that its fibrous network is expanded within the aortic valve with a balloon assembly and seals against the native leaflets by filling the "gaps between the stented valve and the surrounding tissue." Pet. 69 (quoting Ex. 1011 145, Fig. 22; *see also* Section III.D.3.a.viii above).

Petitioner contends that the compression of the fibrous network "creates a mechanical seal that prevents [PVL]." Pet. 70 (quoting Ex. 1011 ¶ 145). Additionally, Petitioner asserts, the compressible material also seals against the outer frame and inner graft covering; if it did not, blood could leak between the components and the valve would not form the disclosed "mechanical seal." *Id.* (citing Ex. 1003 ¶ 230). Petitioner contends that, if Spenser II's fibrous network were added to Figure 44a, the fibrous network would perform the same sealing function due to the similarities between the valves. *Id.*

xi. *"wherein the fibrous network extends over at least two circumferentially extending rows of grids formed in the open cell configuration"*

Petitioner asserts that Figure 44a of Spenser paired with Spenser II's Figure 22 demonstrates that the compressible material extends over at least the bottom two circumferentially extending rows of the open cell grid configuration of stent structure 252. Pet. 71–72 (citing Ex. 1010, Fig. 44a; Ex. 1011, Fig. 22; Ex. 1003 ¶ 233). Figure 44a of Spenser and Figure 22 of Spenser II are again reproduced below:

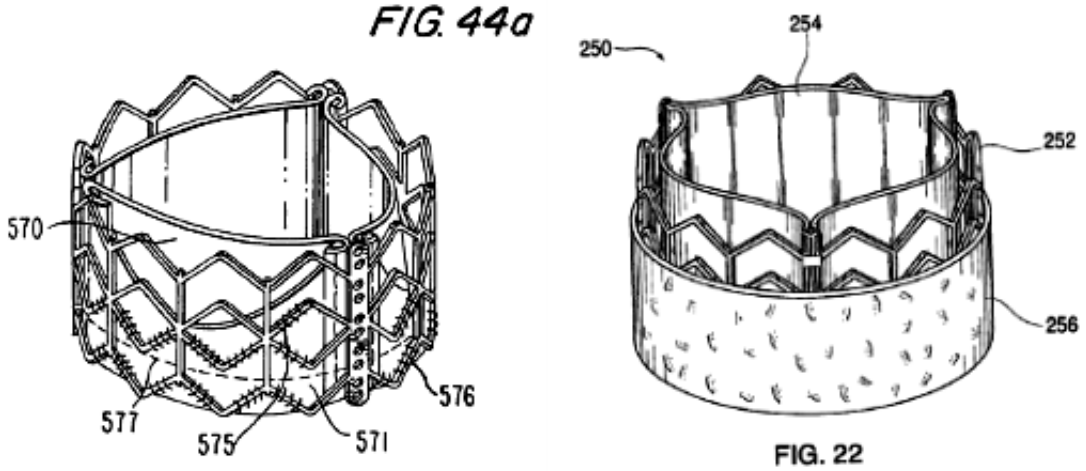

Comparison of the uncovered valve of Spenser's Figure 44a (left) with the compressible cloth-covered valve of Spenser II's Figure 22 (right)

Petitioner argues that, even if claim 1 requires the outer seal to entirely extend over two rows of cells, persons of ordinary skill in the art would have found it obvious to slightly increase the height of Spenser II's compressible material. Pet. 72 (Ex. 1003 ¶¶ 233–235).

In summary, as shown in our review of Petitioner's assertions above, the Petition accounts for each element of independent claim 1 as having been taught by, or obvious over, the asserted prior art.

b. Claim 2

Claim 2 recites: "The method of claim 1, wherein the graft covering extends beyond the proximal end of the outer frame and over the proximal end thereof to cover the proximal end of the outer frame." Ex. 1001, col. 21, ll. 56–59.

Petitioner argues that Spenser discloses an embodiment where a "portion of the valve assembly 34 at an inlet zone 45 is optionally rolled over support stent 32 at the inlet, making up a rolled sleeve, which enhances the sealing of the device at the valve inlet." Pet. 72–73 (citing Ex. 1010, col. 14, ll. 6–9, col. 12, ll. 51–53, Fig. 2).

Petitioner argues that a person of ordinary skill in the art would have found it obvious to add this feature to the device shown in Spencer's Figure 44a and extend the inner PET 571 to cover the proximal end of the frame 575. Pet. 73 (citing Ex. 1003 ¶ 239). Petitioner asserts that a skilled artisan would also have been motivated to extend PET 571 to further "enhance[] the sealing of the device at the valve inlet." *Id.* (citing Ex. 1010, col. 14, ll. 6–9, col. 12, ll. 51–53; Ex. 1003 ¶ 239). According to Petitioner, those skilled in the art would have understood that extending the inner PET fabric over the proximal end of the frame 575 would help prevent blood

from leaking between the inner PET 571 and the frame. *Id.* (citing Ex. 1003 ¶ 239).

Petitioner argues further that a person of ordinary skill in the art would have been motivated to extend Spenser's cuff over the proximal end of the associated stent to reduce the risk that the edges of the frame would damage the surrounding tissue. Pet. 75 (citing Ex. 1048 ¶ 98; Ex. 1003 ¶ 240).

Petitioner also argues that a skilled artisan would have reasonably expected success in extending Spenser's Figure 44a's inner PET because Figures 2 and 44a describe similar heart valves having an inner PET layer that is stitched to a gridded, metallic, balloon-expandable support stent that has three parallel support beams for attaching leaflets. Pet. 73 (citing Ex. 1010, cols. 13–14, ll. 62–9, col. 26, ll. 30–54; Figs. 2, 9a–f, 44a–c; Ex. 1003 ¶ 241).

Petitioner adds that a person of ordinary skill in the art would also have been motivated to add Spenser II's compressible material to the device shown in Spenser's Figure 44a, even if the inner PET 571 covered the proximal end of the frame, because the outer cloth/compressible material serves a different purpose than the extended PET, *viz.*, to prevent blood leakage between the inner and outer frames. *Id.* (citing Ex. 1003 ¶ 242).

c. Claim 3

Claim 3 recites: "The method of claim 2, wherein the fibrous network that extends over at least two circumferentially extending rows of grids

formed in the open cell configuration radially overlaps with the prosthetic leaflets." Ex. 1001, col. 21, ll. 60–63.

Petitioner argues that, when Spenser II's compressible material is added to Spenser's Figure 44a, the cloth/material would extend over at least two circumferentially extending rows of grids formed in the open cell configuration. Pet. 76; *see* Section III.D.3.a.xi above. Petitioner argues that the prosthetic leaflets 570 in Figures 44a–b extend to the proximal end of the frame and, therefore, Spenser II's fibrous network would radially overlap with Spenser's Figure 44a's prosthetic leaflets. (citing Ex. 1010, Fig. 44a–b; Ex. 1003 ¶ 244).

d. Claim 4

Claim 4 recites: "The method of claim 3, wherein the outer frame extends distally further than the prosthetic heart valve." Ex. 1001, col. 21, ll. 64–65.

Petitioner argues that Spenser discloses this limitation in two ways. Pet. 77 (citing Ex. 1003 ¶ 246). First, Petitioner argues that Spenser discloses valves having "heavy metal markers [232] on the stent," which allow visualization of the frame during delivery." *Id.* (citing Ex. 1010, col. 16, ll. 27–51, Figs. 14–14a). According to Petitioner, the portion of the stent having the marker extends distally further than the heart valve. *Id.* (citing Ex. 1003 ¶ 246). Petitioner contends that a person of ordinary skill in the art would have been motivated to add markers to Spenser's Figure 44a's frame to better visualize the frame during deployment. *Id.* Petitioner also

asserts that a skilled artisan would reasonably have expected success in adding the markers because Spenser describes using the markers with frames similar to Figure 44a, and because markers were in common use in the field by 2012. *Id.*

Second, Petitioner points to Figure 28 of Spenser, which is reproduced below:

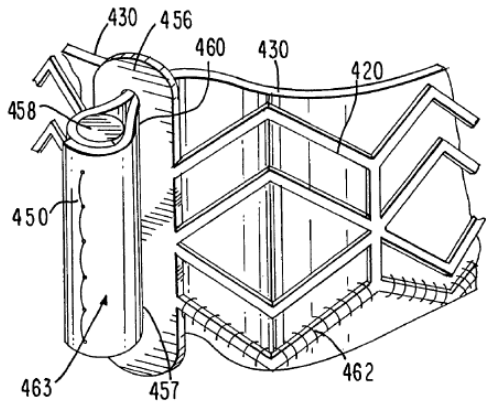

FIG. 28

Figure 28 of Spenser depicts a partial view of an implantable prosthetic valve detailing the commissural attachment

According to Petitioner, Figure 28 depicts the outer frame portion 456, which extends distally further than the heart valve. Pet. 78 (citing Ex. 1003 ¶ 247). Petitioner contends that a skilled artisan would have been motivated to use this method of attachment in Figure 44a to reduce stress points and abrasion on the leaflets. *Id.* (citing Ex. 1010, col. 21, ll. 60–6; Ex. 1003 ¶ 247). Petitioner also argues that those of skill in the art would have reasonably expected success in applying this method to the device

shown by Figure 44a, because Spenser discloses using the method with a valve similar to that of Figure 44a. *Id*. (citing Ex. 1003 ¶ 247).

e. Claim 5

Claim 5 recites: "The method of claim 3, wherein the outer frame is a singular, integral component." Ex. 1001, col. 21, ll. 66–67.

Petitioner argues that Figure 44a of Spenser includes "frame 575," which is a singular, integral component. Pet. 78 (citing (Ex. 1010, col. 26, ll. 30–34, col. 19, ll. 5–13, Figs. 44a–44b; Ex. 1003 ¶ 249).

f. Claim 6

Claim 6 recites: "The method of claim 3, wherein the outer frame and the graft covering are attached by stitches at a distal end of the graft covering." Ex. 1001, col. 22, ll. 1–3.

Petitioner argues that Spenser's PET layer 571 (graft covering) is attached to the frame 575 with stitches at the distal end of the graft covering. Pet. 79 (citing Ex. 1010, col. 26, ll. 42–48, Figs. 44a–44c; Ex. 1003 ¶ 251).

g. Claim 7

Claim 7 recites: "The method of claim 3, wherein a portion of a length of a fiber of the fibrous network is arcuate." Ex. 1001, col. 22, ll. 4–5.

Petitioner contends that combination of Spenser and Spenser II render claim 7 obvious. Pet. 80 (citing Ex. 1003 ¶¶ 252–253). Petitioner contends

that Spenser II discloses that the radially extending fibers of the outer compressible material "may be straight, curved or hook-shaped." *Id.* (citing Ex. 1011 ¶ 145).

h. Claim 8

Claim 8 recites: "The method of claim 1, wherein the balloon assembly is radially inwardly of the transcatheter aortic valve assembly when the valve assembly is in the radially compressed orientation." Ex. 1001, col. 22, ll. 6–9.

Petitioner points to Figure 3 of Spenser (reproduced below), which, Petitioner contends, teaches this limitation. Pet. 80 (citing Ex. 1010, col. 8, ll. 63–65, Fig. 3).

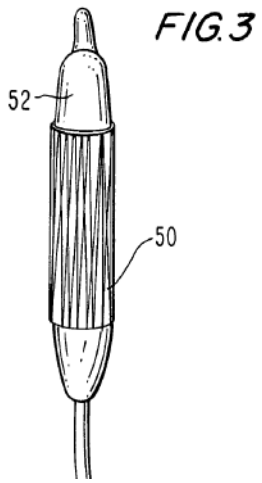

Figure 3 of Spenser depicts an implantable valve mounted over a stent with an inflatable balloon, in a crimped position

According to Petitioner, the "inflatable balloon 52" is positioned radially inwardly of the valve stent 50. (Ex. 1003 ¶ 255).

i. Claim 10

Claim 10 recites: "The method of claim 1, wherein the fibrous network includes fibers directly engaged with the outer frame." Ex. 1001, col. 22, ll. 13–14.

Petitioner argues that Spenser II discloses that compressible material 256 "is disposed along an outer surface of the stent structure 252" and, consequently, the fibers comprising the material directly engage the stent. Pet. 82 (citing Ex. 1011 ¶ 145, Fig. 22). Petitioner contends that, if Spenser II's compressible material were disposed along the outer frame of Spenser's Figure 44a, the fibers would directly engage the outer frame just as in Spenser II. *Id.* (citing Ex. 1003 ¶ 260).

j. Claim 11

Petitioner argues that claim 11 is identical to claim 1, except for the limitation of claim 11 reciting "wherein the fibrous network seals against the aortic valve assembly outwardly of the prosthetic leaflets."[10] Ex. 1001, col. 22, ll. 51–52.

Petitioner argues that Spenser II's compressible material would seal against the outer frame and PET graft covering of the valve depicted in

---

[10] This limitation replaces the limitation of claim 1 reciting "wherein the fibrous network seals against the native valve leaflets of the patient, the outer frame, and the graft covering in response to compression from inflation of the balloon assembly." Ex. 1001, col. 21, ll. 49–52.

Spenser's Figure 44a. Pet. 83; *see* Section III.D.3.a.x above. According to Petitioner, the outer frame and graft covering are outward of the prosthetic leaflets, as would be any outer cloth/material added to the frame's exterior. *Id.* (citing Ex. 1010, Fig. 44a; Ex. 1011, Fig. 22). Consequently, Petitioner asserts, the fibrous network formed by Spenser II's compressible material would seal against the aortic valve assembly outwardly of the prosthetic leaflets. *Id.* (citing Ex. 1003 ¶¶ 264–265).

k. Claims 12–18 and 20

Petitioner notes that claims 12–18 and 20, which depend directly or indirectly from claim 11, are otherwise identical to claims 2–8 and 10, and argues that Spenser and Spenser II render these claims obvious for the reasons provided above with respect to claims 2–8 and 10. Pet. 84; *see* Sections III.D.3.b–i above.

4. Patent Owner's Response

Patent Owner contends that Petitioner's case fails, in part, because it has failed to prove that Spenser's valve, when covered by Spenser II's outer covering, would be endovascularly-deliverable. PO Resp. 12–13. Furthermore, argues Patent Owner, even if Petitioner's combinations could be delivered endovascularly, Petitioner fails to prove that a person of ordinary skill in the art would have been motivated to combine the references. *Id.* Patent Owner also urges us to discount the testimony of Petitioner's expert, Dr. Buller, because he allegedly failed to recognize the

obvious distinctions between the Patent's sealing material and Spenser II's covering. *Id.*

Patent Owner also contends that Petitioner fails to prove that any of its asserted prior art combinations disclose or render obvious a "fibrous network" that is "in overlapping radial alignment with native valve leaflets," Pet. 73. Additionally, Patent Owner argues that evidence of objective indicia of nonobviousness supports the patentability of the claims. *Id.* at 2.

a. "Endovascularly deliverable"

Patent Owner argues Petitioner fails to prove that the resultant device of combining Spenser and Spenser II could be endovascularly delivered, noting that Petitioner does not provide a crimp profile for the resulting device of its combination. PO Resp. 14 (citing Pet. 23–27, 55–58, 87–88). Acknowledging that Petitioner argues the notion of delivery *via* the common iliac artery, Patent Owner asserts that Petitioner nevertheless fails to prove that the common iliac artery in patients who need TAVR,[11] many of whom suffer from vascular disease, could accommodate the necessarily larger delivery sheath. *Id.* at 14.

Patent Owner argues further that there is no reason to assume that Petitioner's combination incorporating Spenser II's outer covering onto

---

[11] Throughout this Decision, we use "TAVR" to refer to both the procedure and to the prosthetic heart valve replacement device.

Spenser's TAVR could be endovascularly delivered. PO Resp. 15. According to Patent Owner, there is no evidence that the common iliac artery would accommodate the device of the combination of Spenser and Spenser II. *Id.* at 15. Patent Owner's expert, Dr. Brecker, pointing to Petitioner's cited prior art, opines that "a POSITA would expect Spenser-II's Figure 22 to also have a large crimp profile." *Id.* at 19 (quoting Ex. 2051 ¶ 93). Patent Owner also notes that Petitioner's expert, Dr. Buller, acknowledged at his deposition that he was not aware of any TAVR with an outer cloth like the ones seen in Spenser II's Figure 22 being delivered transfemorally or *via* the common iliac. *Id.* at 19–20 (citing Ex. 2052, 105, 107–08).

Patent Owner further argues that Petitioner also fails to account for bunching of the material. PO Resp. 20. Petitioner asserts that Dr. Buller did not know whether Walther would bunch, and contends that his speculation that Walther's cloth would have minimal bunching is insufficient as evidence to support a conclusion of obviousness. *Id.* (citing Ex. 2052, 104). Patent Owner's expert, Dr. Brecker, takes a contrary position, opining that it was well known in the art that the Walther cloth would "bunch" significantly, which would substantially impact Spenser's crimp profile. *Id.* at 21–25. According to Patent Owner, Spenser II describes a compressible material that is 1–5 mm thick, and Spenser teaches a valve that has a

diameter of 25–26 mm when expanded. *Id.* at 25 (citing Ex. 1011 ¶ 145; Ex. 1010, col. 27–28, ll. 67–2). Dr. Brecker accordingly calculates that:

> Spenser's valve with Spenser-II's outer cloth would have a diameter of at least 10.96 mm (when the valve is crimped and the cloth uncompressed)—similar to Walther's 11 mm delivery—over 36% too large for transfemoral delivery and endovascular delivery more generally … this is a rough conservative estimate that likely underestimates the effects of the bulging shown in Russell.[12] This effect therefore will counteract the effect of compressibility.

Id. (quoting Ex. 2051 ¶¶ 97, 60–63 (citations omitted)). Dr. Brecker calculates that, because the crimp profile of the valve without the cloth is 4 mm, Spenser II's 1 mm thick cloth (in its expanded state) would add approximately 7 mm (10.96 mm minus 4 mm) to the crimped diameter, without accounting for bunching, bulging, and compression. *Id.* (citing Ex. 2051 ¶ 98). Patent Owner asserts that both Petitioner's and Patent Owner's experts agree that Spenser II's 1–5 mm range is in the expanded state, which is consistent with Dr. Brecker's calculations. *Id.* at 26–27 (citing Ex. 2051 ¶¶ 99–100; Ex. 2052, 217–18; Ex. 1011 ¶ 145).

Patent Owner argues that the only endovascularly-deliverable TAVR with an outer covering that Petitioner has identified in the prior art is Levi. PO Resp. 27 (citing Ex. 2052, 19, 225). Dr. Brecker calculates that Levi's

---

[12] H.M. Russell et al., *Open Atrial Transcatheter Mitral Valve Replacement in Patients With Mitral Annular Calcification*, 72(13) J AMER. COLL. CARDIOL. 1437–48 (2018) ("Russell") Ex. 2009.

outer skirt is roughly approximately 10–52x thinner than Spenser II's compressible material and approximately 21x thinner than Walther's outer cloth. *Id.* (citing Ex. 2051 ¶¶ 101–104). This, according to Patent Owner, confirms that a TAVR with a thick, bulky Spenser II-like outer covering could not be endovascularly-delivered. *Id.*

Patent Owner disputes Petitioner's argument that a person of ordinary skill in the art would have been able to deliver a TAVR covered in Spenser II's outer covering *via* the common iliac artery. PO Resp. 29 (citing, e.g., Pet. 39–40, 68–69, 96–97). Patent Owner asserts that Petitioner relies principally upon Kainuma[13] as evidence of a TAVR ever being delivered endovascularly *via* the common iliac. *Id.* (citing Ex. 1043; Ex. 2052, 57).

However, Patent Owner argues, Kainuma provides no support for Petitioner's position that the common iliac could accommodate delivery of a TAVR with a Spenser II-like outer cloth. *Id.* Patent Owner notes that Kainuma teaches the use of a 22F[14] arterial sheath, and asserts that Kainuma does not suggest a larger sheath would be appropriate. *Id.* at 29–30 (citing Ex. 1043, 274; Ex. 2052, 31). Patent Owner notes that the 22F delivery

---

[13] S. Kainuma et al., *Transcatheter Aortic Valve Implantation: First Trans-Iliac Experience in Japan*, 59 GEN. THORAC. CARDIOVASC. SURG. 273–76 (2011) Ex. 1043.

[14] "F" or "French" is a universal measure of catheter gauge or diameter such that 1F = 1/3 mm. *See, e.g.*, 180° Medical, *Figuring Out French Sizes: Urinary Catheter Sizes*, *available at*: https://www.180medical.com/blog/figuring-out-french-sizes/ (last visited March 21, 2022).

sheath used for the common iliac delivery is the same sheath Kainuma recommends for transfemoral delivery. *Id.* at 30 (citing Ex. 2052, 32, 34; Ex. 1043, 275).

Patent Owner also notes that Petitioner's expert, Dr. Buller, cites to Criado,[15] which teaches a TEVAR ("thoracic endovascular aortic repair"), and not a TAVR ("transcatheter aortic valve replacement"), which Patent Owner contends is a distinct procedure. PO Resp. 30 (citing Ex. 1044; Ex. 1003 ¶ 125). According to Patent Owner, Criado teaches introduction of a Gore TAG endograft which has a delivery profile of 20–24F, and notes that any sheath at or above 22F is a "large-bore sheath." *Id.* at 30–31 (citing Ex. 1044, 347; Ex. 2065). Criado, argues Patent Owner, therefore does not concern TAVRs and does not teach or suggest that the 24F upper limit for transfemoral delivery may be exceeded *via* the common iliac. *Id.* at 31.

Patent Owner further contends that Petitioner does not present evidence that it ever sought approval to deliver a SAPIEN (or other TAVR) *via* the common iliac. PO Resp. 32 (citing Ex. 2052, 27). Patent Owner asserts that delivery *via* the common iliac is significantly more invasive than transfemoral delivery, and that both experts agree that a surgery to access the common iliac carries risks of vascular injury, infection, vessel rupture, bleeding, renal failure and more. *Id.* (citing Ex. 2051 ¶ 69; Ex. 2052, 27–28,

---

[15] F.J. Criado, *Iliac Arterial Conduits for Endovascular Access: Technical Considerations*, 14 J. ENDOVASC. THER. 347–51 (2007) ("Criado") Ex. 1044.

44, 57, 59, 61–62, 69). By contrast, Patent Owner argues, a transfemoral delivery does not require surgery and can be performed with a simple incision under local anesthesia. *Id.* (citing Ex. 2052, 13–14, 203; Ex. 2051 ¶ 105).

b. Motivation to combine

Patent Owner also disputes Petitioner's position that a person of ordinary skill in the art would be motivated, and able, to modify Spenser II's outer cloth to arrive at an endovascularly-deliverable combination. PO Resp. 34. Patent Owner also asserts that Petitioner's unspecified modifications are instead hindsight-driven, and do not satisfy the claims as a whole. *Id.* at 34–35. Patent Owner acknowledges that PVL was well known in the art to be a serious problem when performing a TAVR. *Id.* However, Patent Owner argues, although it was known in the art since the early 1990s that a seal could address PVL, Petitioner does not identify one instance of an endovascularly-deliverable TAVR with an outer cloth like that of Spenser II. *Id.* (citing Ex. 2052, 20).

To the contrary, Patent Owner argues, a skilled artisan would not have been motivated to add Spenser II's outer cloth to a TAVR meant for endovascular delivery. PO Resp. 37. Patent Owner points to Dr. Brecker's testimony that:

> Even if a TAVR with Walther's or Spenser-II's outer cloth could, somehow, be endovascularly delivered, I do not believe a POSITA would have been motivated to make such a combination in 2012, as by any measure this would have significantly

> increased the crimp profile. The entire premise of TAVR was to make a percutaneous procedure that was minimally invasive and would provide a life-saving alternative for inoperable patients.
>
> In 2012, POSITAs were interested in decreasing the crimp profile as much as possible, and a major thrust of design development was with this intention. Edwards' second-generation [SAPIEN valve], the SAPIEN XT (available in Europe in 2010) reduced the delivery profile from SAPIEN's 22–24F to 16–18F (interior diameter), as a large crimp profile was "one of the major concerns regarding vascular related complications." The notion that a design development which substantially increased crimp profile (using Walther or Spenser II outer cloth, even if it could be at the limits of endovascular delivery), would gain traction, is fanciful.
>
> ….
>
> Petitioner and Dr. Buller do not explain why a POSITA would add Walther or Spenser II's bulky outer cloth to a TAVR meant to be endovascularly deliverable. Even if we assume these combinations were, somehow, endovascularly-deliverable, they would be just barely so and, if Petitioner's arguments are to be believed, may have to be made *via* an invasive common iliac surgery—the very thing TAVR sought to avoid. Petitioner, quite simply, does not explain why a POSITA would take this route. Petitioner does not argue that adding Walther's or Spenser-II's outer cloth would somehow improve the crimp profile or better reduce PVL over Levi's solution. I do not see why a POSITA would be motivated to do such a thing. As someone who was actively undertaking TAVR procedures in 2012, I can state as a fact that any new device which had a substantially increased profile, would be regarded negatively. The combinations seem driven by hindsight.

Id. at 37–39 (quoting Ex. 2051 ¶¶ 107–110).

c. A "fibrous network" "in overlapping radial alignment with native valve leaflets"

Patent Owner next argues that, as it explained during prosecution of the '538 patent, this limitation was distinct from prior art references that "seal[ed] below the leaflets." PO Resp. 74 (citing Ex. 1002, 152). Patent Owner also explained that the limitation beneficially increased the outer seal's overall surface area while "not significantly increas[ing] the profile" and that "this increased surface area due to the outwardly extending fibers will significantly reduce paravalvular leaks." *Id.* (citing Ex. 1002, 152). According to Patent Owner, this sealing in overlapping alignment with the native leaflets facilitated an endovascularly-deliverable TAVR that addressed PVL. *Id.*

Patent Owner contends that Petitioner has failed to identify any reference where "the fibrous network ... is in overlapping radial alignment with native valve leaflets." PO Resp. 74. Patent Owner asserts that the '538 patent's Figures, and particularly the prosecution history, confirm that this limitation is not satisfied by minimal overlap between the fibrous network and the native valve leaflets. *Id.* Patent Owner also asserts that Petitioner has also failed to prove that a person of ordinary skill in the art would have been motivated to position Spenser-II's outer coverings in its combinations such that it is in overlapping radial alignment with the leaflets. *Id.*

Patent Owner contends that, in our Decision instituting *inter partes* review, we found "a partial overlap to be consistent with" a "fibrous network" being in "overlapping realignment." PO Resp. 75 (quoting

Rehearing-Denial (Paper 21), 9). Patent Owner asserts, however, that this is inconsistent with the '538 patent's Specification and the disavowal in prosecution which, Patent Owner argues, make clear a minimal overlap does not satisfy "overlapping radial alignment." *Id.*

Patent Owner first points to Figures 21 and 22 of the '538 application (reproduced below), which were redrawn from Figures 9 and 10 of the '446 application, the parent of the '538 patent. PO Resp. 75–76. Patent Owner contends that these Figures, reproduced below, show a complete overlap between the "fibrous network" and the "native leaflets of the patient."

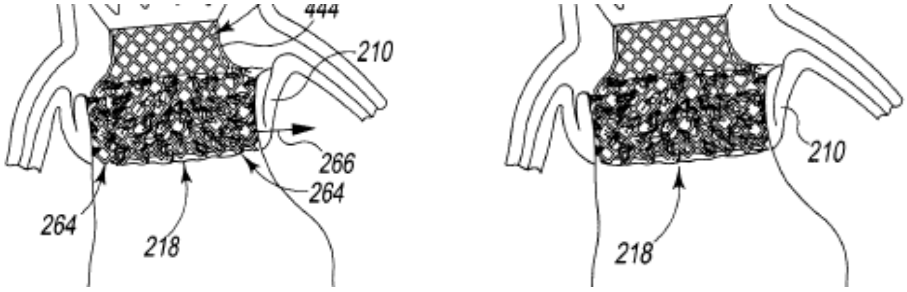

Details of Figures 21 (left) and 22 (right) of the '538 patent depict a cross-sectional view of the TAVR device in situ in the aortic valve

Patent Owner argues that, during prosecution, Patent Owner explicitly stated that, "[t]he overlap of the fibrous network with the native valve leaflets of the patient is illustrated in [provisional] Fig. 9," and that the Figures show a complete overlap between the fibrous network and the native valve leaflets. PO Resp. 76 (quoting Ex. 1002, 80).

Furthermore, Patent Owner argues, during prosecution, Patent Owner also contended that:

> Much of the prior art teaches, when using an outer seal, to position the outer seal below the native leaflets.… Applicant submits that sealing below the leaflets has been the preferred method for creating an outer seal for transcatheter aortic valve replacement because the triangulation shape created by the folded up native leaflets has proven challenging to seal against.

Id. (quoting Ex. 1002, 151–152). Patent Owner asserts that it thus disclaimed the minimal overlap where the tips of the outer seal material just barely overlap with the bottom of the native leaflets. *Id.*

With respect to Ground IV, and generally, Patent Owner argues that Petitioner relies on the same arguments originally asserted under Ground 1. PO Resp. 90. Ground I relies upon the combination of Cribier and Walther. Cribier discloses the use of Petitioner's SAPIEN TAVR device, which is, essentially the same as that disclosed by Spenser's Figure 44a[16]. *See* Ex. 1012, 348; Ex. 1010, Fig. 44a. Figure 1 of Walther illustrates an "outer cloth" covering of Cribier's SAPIEN valve that appears similar to Spenser II's disclosed compressible cloth in how it covers the stent, as depicted in Spenser II's Figure 22.

---

[16] We note that Petitioner is also the assignee of Spenser. Ex. 1010, code 73.

Figure 1 of Walther and Figure 22 of Spencer II are reproduced, side-by-side, below:

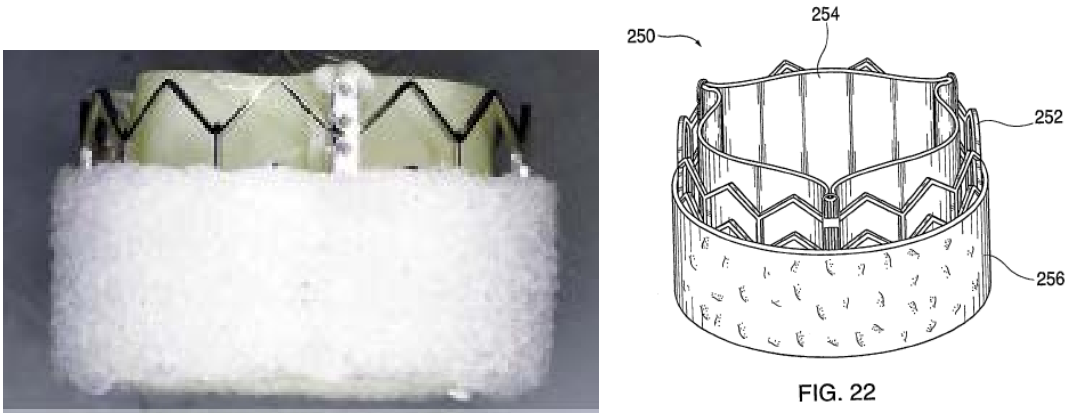

Figure 1 (detail) of Walther (left) and Figure 22 of Spenser II (right) showing, respectively, a lateral and a perspective view of a prosthetic heart valve with an outer or compressible cloth covering

Patent Owner contends, with respect to both Petitioner's Grounds I and IV, that none of the cited references teach that there is complete overlap between the outer coverings of Spenser II or Walther and the native leaflets. For example, argues Patent Owner, Cribier teaches that "before deployment, one third to half of the stented prosthesis needs to rest above the annulus … to minimize [PVL] and avoid coronary occlusion" and that the part of the valve that is above the annulus "would be in overlapping radial alignment with the leaflets." PO Resp. 85 (quoting Ex. 1012, 353), Patent Owner contends that "Petitioner does not explain why a POSITA would choose to position the proposed Cribier-Walther [or the Spenser-Spenser II] valve such that fully half of the valve would rest above the annulus – thus allowing [the] outer seal to come in contact with the native leaflets." PO Resp. 86.

Petitioner also points to Dr. Brecker's testimony that:

> As I noted earlier, a POSITA in 2012 would know to position a valve with an outer seal such that the outer seal was positioned at the annulus, below the native valve leaflets. A POSITA at the time would have understood that the gaps between the bases of the leaflets could be difficult to seal against. Further, a POSITA would have understood that it is desirable to keep the part of the frame that is above the annulus uncovered for stability. As Petitioner's expert, Dr. Buller, testified in a separate matter, conventional thinking was that by pressing the bars of the frame into the leaflets "you could lock the device … into the craggy, calcified, diseased native valve leaflets" and "help prevent migration" of the valve.
>
> I see no explanation in the Petition or Dr. Buller's declaration for why a POSITA would go against the conventional understanding and position the proposed modified Cribier [or Spenser] such that part of the added outer seal would be above the annulus.
>
> Indeed, a POSITA could have complied with the conventional approach by positioning the proposed valve such that the uncovered top one-third of the valve is above the annulus, as Cribier teaches, and the covered bottom two-thirds of the valve below the annulus (and below the native leaflets).

Ex. 2051 ¶¶ 207–209 (internal citations and quotations omitted).

d. Objective indicia of nonobviousness

Patent Owner argues further that, as it pointed out during prosecution of related US patent 10,966,846 B2 (the "'846 patent"), TAVR design is subject to competing requirements: "The TAVR must ... provide sealing characteristics to reduce PVL and PVR, yet, must maintain a small overall crimped profile as the compressed TAVR must be delivered

endovascularly." PO Resp. 2 (quoting Ex. 2076, 133, 134). Patent Owner asserts that Edwards' second-generation TAVR valve (SAPIEN XT), with no outer covering, had a delivery diameter (i.e., in its crimped configuration) of 16F–18F, less than the maximum permissible diameter of 24F for transfemoral insertion. *Id.* at 3.

At the same time, relates Patent Owner, concerns over PVL became significantly more pronounced. PO Resp. 3 (citing Ex. 2068, 859; Ex. 2069, 1; Ex. 2052, 231). Patent Owner acknowledges that some outer sealing materials were known, but contends they were inadequate. *Id.* at 4. Patent Owner contends that the "thick outer cloth" taught by Walther, Cheung, and Spenser II was too thick an outer cloth and unsuitable for endovascular delivery, requiring a 33F sheath. *Id.* Patent Owner contends that the increased diameter of sheaths used to introduce devices like Walther, which were used in transapical approaches, represented a major limitation. *Id.* at 4–5 (citing Ex. 2058, 217; Ex. 2049, 278; Ex. 2052, 82).

Patent Owner argues that its claimed device provided a solution to this intractable problem through a combination of features. PO Resp. 6 (citing Ex. 1002, 277). Patent Owner points to the testimony of Dr. Brecker, who states that:

> The specification discloses an outer frame that has … sealing material comprised of radially or outwardly extending fibers. The fibers are sparsely distributed.… The fibers form a seal upon compression in *in vivo* implantation.
>
> …

> It is counter-intuitive that a sparse distribution of fibers as taught could create a seal. I had not seen any prior art TAVR with this arrangement of fibers. Similarly, Dr. Buller was unaware of any stent with fibers like those present in the Patent's figures.

Id. at 7–11 (quoting Ex. 2052 ¶ 37–40).

e. The weight accorded Dr. Buller's testimony

Patent Owner argues that the testimony of Petitioner's expert, Dr. Buller, should be discounted because his deposition testimony was allegedly implausible on significant matters. PO Resp. 90. Patent Owner asserts that, although Dr. Buller conceded that he had not seen a TAVR or stent with a distribution of fibers like those depicted in the '538 Patent, he refused to acknowledge that the sealing material depicted in the Patent's Figures are distinct from the outer coverings shown in Spenser II. *Id.* at 48. Patent Owner argues that Dr. Buller's testimony in this respect is not credible. *Id.*

Patent Owner notes that both parties' experts agree that the Specification of the '538 patent discloses sealing material formed of relatively sparse distribution of radially extending fibers that was unlike any they had seen in the prior art. PO Resp. 48 (citing Ex. 2051 ¶ 39; Ex. 2052, 167–69. Patent Owner specifically points to Dr. Buller's testimony that "I can't think of a diagram in a patent that looks like [Fig. 9 of the '538 patent]" and "I don't remember" any patent, reference, product, or prototype "that looks like Figure 9, no." *Id.* (quoting Ex. 2052, 167–69). According to

Patent Owner, Dr. Buller thus admits that the distribution of fibers in the Patent's figures, like Figure 9, was novel. *Id.*

Patent Owner asserts that the sparse distribution of fibers in Figure 9 of the '538 patent, through which the outer frame is visible, looks nothing like the thick, opaque outer coverings Spenser II or Cheung, and that these differences are material when the crimp profile is in question. PO Resp. 49. Patent Owner contends, however, that Dr. Buller refused to admit that the prior art outer coverings are opaque relative to the frame. *Id.* at 50 (citing Ex. 2052, 155, 156–57, 160).

Furthermore, argues Patent Owner, Dr. Buller then testified that Figure 22 of Spenser II "shows exactly the same thing" as depicted in Figure 9, and that the two are "conceptually the same." *Id.* at 51 (quoting Ex. 2052, 157–59). For the reader's convenience, a side-by-side comparison of Figure 9 of the '538 patent and Figure 22 of Spenser II is presented below:

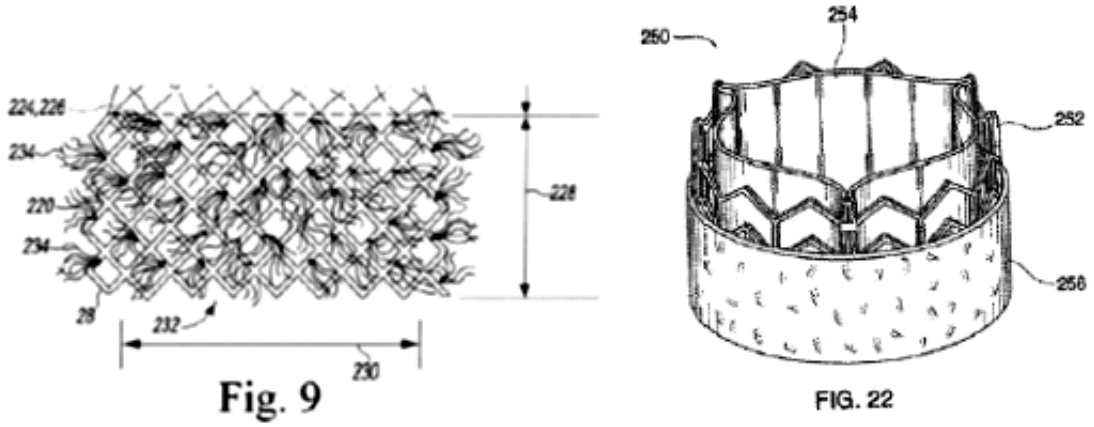

Figure 9 of the '538 patent (left) and Figure 22 of Spenser II (right) depict embodiments of their respectively claimed inventions

Patent Owner asserts that Dr. Buller's testimony is therefore not credible in this respect. *Id.* at 53.

Patent Owner argues further that Dr. Buller is not qualified to opine as an expert with respect to TAVR. PO Resp. 93. According to Patent Owner, Dr. Buller has never: (1) implanted a TAVR in a human being or animal; (2) conducted research or published a paper on TAVR; (3) designed a TAVR or a covering therefor; (4) retired from performing surgical procedures in 2008, and has not since implanted any stent. *Id.* (citing Ex. 2052, 248–250). Patent Owner alleges that Dr. Buller therefore had no understanding of the issues confronting those who design and/or implant TAVRs during the relevant time. *Id.* (citing Ex. 2052, 74–76). Patent Owner contrasts Dr. Buller with its own expert, Dr. Brecker, whom Patent Owner argues has performed over 1,300 TAVR procedures, and had published over a dozen TAVR-related articles by 2012. *Id.* at 94 (citing Ex. 2051 ¶¶ 8, 11; Ex. 2052, 46–47).

Patent Owner further contends that Dr. Buller is not a person of ordinary skill in the art, and his testimony, therefore, should not be given any weight. PO Resp. 95 (citing *Kyocera Senco Indus. Tools, Inc. v. ITC*, 22 F.4th 1369, 1376–77 (Fed. Cir. 2022). Pointing to Petitioner's definition of a person of ordinary skill in the art, Patent Owner points out that Dr. Buller retired from undertaking procedures in 2008 and was not therefore a practicing interventional cardiologist or a person of ordinary skill in the art. *Id.*

5. Petitioner's Reply

a. "Sparse fibers"

In response, Petitioner argues that Patent Owner's arguments improperly rely on unclaimed and undisclosed features that cannot form the basis for finding the '538 patent's claims nonobvious. Pet. Reply 14 (citing *Smith & Nephew, Inc. v. Rea*, 721 F.3d 1371, 1381 (Fed. Cir. 2013)). Petitioner argues that Patent Owner contends that an endovascularly-deliverable valve was only possible by using an outer seal with a "sparse distribution of fibers." *Id.* (citing PO Resp. 1, 6–12, 48–49; Ex. 2051 ¶ 39).

Petitioner, however, points out that the '538 patent neither claims nor discloses an outer seal with a "sparse distribution of fibers," and in fact, does not claim or disclose any sizing, density, or arrangement of fibers. Pet. Reply 15. Rather, argues Petitioner, even the '538 Specification describes only that the fibers are "attached" to the frame. *Id.* (citing Ex. 1001, col. 18, ll. 10–20). Petitioner notes that Dr. Brecker confirmed this; when asked to

further define a "sparse distribution of fibers," Dr. Brecker referenced drawings in the patent and stated that the fibers appeared "countable." *Id.* (citing Ex. 1073 315–319).

Petitioner argues that Figures in the '538 patent cannot alone support the importation of a "sparse distribution" of fibers limitation into the claims, because nothing in the patent indicates that the figures are to scale or accurately represent the arrangement of fibers necessary to enable endovascular delivery. Pet. Reply 5 (citing *Hockerson-Halberstadt, Inc. v. Avia Grp. Int'l, Inc.*, 222 F.3d 951, 956 (Fed. Cir. 2000)).

b. Compressibility of Spenser II's cloth

Petitioner next argues that Patent Owner's reliance upon Dr. Brecker's calculations is misplaced. Pet. Reply 18. Petitioner contends that Dr. Brecker, in his "rough estimate" of the crimped profile of Spenser II's compressible material, relied on the "uncompressed Spenser II outer cloth." *Id.* (citing Ex. 2051 ¶ 63; Ex. 1073, 350). Petitioner also notes Dr. Brecker testified he did not conduct any research on the compressibility of PET fabrics. *Id.* at 18–19 (Ex. 1072, 191–192).

Petitioner asserts that Spenser II expressly discloses that its outer seal is "compressible" and teaches that its solutions are intended for percutaneously delivered valves. Pet. Reply 19 (citing Ex. 1011, Abstr., ¶ 145). Petitioner also points to Dr. Buller's testimony that persons of ordinary skill in the art would have understood that Walther's outer cloth was "very compressible" and that its compressible material would result in

much thinner profiles when the valve is compressed for delivery. *Id.* at 8–9 (citing Ex. 2052, 102–104, 123, 181). Petitioner argues that this testimony is corroborated not only by Spenser II, but also by other prior art evidence. Pet. Reply 19. By way of evidence, Petitioner points to Norris,[17] which discloses a "compressible resilient fabric" that can be used "in vascular and endovascular implants such as stents, stent-grafts, and heart valves." *Id.* (citing Ex. 1074, col. 10, ll. 45–49). According to Petitioner, Norris evidences that in some embodiments, its fabric can have a non-compressed thickness of about 1–5 mm (the same dimensions as Spenser II's compressible material), and when compressed, the fabric can have a thickness of about 0.004–0.008 inches (i.e., 0.1–0.2 mm), roughly 10–25 times thinner than its uncompressed thickness. *Id.* (citing Ex. 1074, col. 4, ll. 54–58). Petitioner asserts that, because Norris describes fabrics intended for use with endovascularly-deliverable heart valves, Norris would have reinforced a skilled artisan's reasonable expectation that Spenser II's compressible material would be compatible with an endovascularly-delivered TAVR. *Id.* at 20.

Petitioner also disputes Patent Owner's argument that the outer cloth of Spenser II would "bunch," rendering it unusable for endovascular delivery. Pet. Reply 20. Petitioner contends that Patent Owner's and Dr. Brecker's reliance on Russell is misplaced, because: (1) Russell is not

---

[17] Norris et al. (US 7, 921,678 B2, April 12, 2011) ("Norris") Ex. 1074.

prior art; and (2) Russell's outer cloth is not a compressible PET fabric, rather, it is a dense, matted felt material. *Id.* (citing Ex. 2009, 1440; Ex. 1076). Furthermore, argues Petitioner, Russell's felt material was not meant to compress and expand to fill gaps between the valve and the native tissue like the outer cloth of Spenser II, but instead serves to provide a sturdy base for suturing the Russell valve to the patient's native mitral valve. *Id.* (citing Ex. 2009, 1443, Fig. 4F; Ex. 1072, 197–98; Ex. 1076).

Petitioner also points out that Patent Owner's arguments seem to erroneously rely upon bodily incorporating Spenser II's compressible material onto the valves taught by Spenser. Pet. Reply 21. Petitioner argues that persons of skill in the art would have had knowledge of a range of suitable cloths, and could have selected an appropriately dimensioned cloth for endovascular delivery. *Id.* (citing Pet. 40, 69, 97; Ex. 1003 ¶¶ 69, 130, 298). In support of this, Petitioner points to prior art that demonstrates the known range of cloths and outer sealing materials, including fabrics that are highly compressible to minimize valve profile. *Id.* (citing, e.g., Ex. 1011 ¶¶ 55, 145; Ex. 1008, 13; Ex. 1007, 1021; Ex. 1017, 1–2; Ex. 1074, col. 4, ll. 54–58, col. 10, ll. 45–49; Ex. 2056, 33–34).

Similarly, Petitioner disputes Patent Owner's allegations of impermissible hindsight analysis. Pet. Reply 22. Petitioner asserts the prior art expressly disclosed using fibrous outer sealing materials in THVs to reduce PVL and promote tissue ingrowth, and further taught adding sealing materials to valves intended for endovascular delivery. *Id.* (citing Ex. 1003 ¶¶ 63–74, 123–131, 206–214, 266, 293–299).

c. Iliac artery delivery

Petitioner notes that the '538 patent expressly teaches delivery of its TAVR through the "iliac arteries or an iliac conduit," and that the feasibility of such an approach is confirmed as known in the prior art by Kainuma. Pet. Reply 23 (quoting Ex. 1001, col. 10, ll. 34–35; and citing Ex. 1043, 2; Ex. 1077, 465–67). Petitioner argues, *contra* Patent Owner, that although Kainuma employed a 22F sheath to deliver the TAVR (which was the standard diameter for a SAPIEN valve), a skilled artisan would have been aware that the common iliac artery has a generally larger diameter than the common femoral artery and could therefore accommodate a device with a larger crimped diameter. *Id.* (citing Ex. 1003 ¶¶ 110, 125–28, 131, 210, 213, 296–298; Ex. 1078, 602–03).

Similarly, Petitioner contends that Criado expressly teaches that:

> Iliac access conduits are valuable tools to facilitate endovascular arterial access in a number of clinical situations that tend to share 2 things in common: the presence of small and/or diseased (calcified) femoral and external iliac arteries (EIA) and the need for introduction of a large-bore sheath or catheter, size ≥ 22-F, in the majority of cases … [and that] the basic procedural requirements [for access *via* the iliac artery] tend to be straightforward from a surgical perspective.

Pet. Reply 24 (citing Ex. 1044, 347, 348).

Finally, Petitioner notes that Dr. Brecker's characterization of delivery through the common iliac artery as "perverse" is contradicted by his own

articles. Pet. Reply 24 (citing Ex. 2051 ¶ 69). Petitioner points to Linke,[18] a prior art publication co-authored by Dr. Brecker, which expressly teaches performing TAVR implantations *via* the iliac approach. *Id.* (citing Ex. 1101, 2674). Petitioner adds that the article does not include any teaching that transiliac implantations were unsafe. *Id.*

d. A "fibrous network" "in overlapping radial alignment with native valve leaflets"

Petitioner contends that Spenser II's outer seals would be in overlapping radial alignment with the native valve leaflets when combined with Spenser. Pet. Reply 13 (citing Pet., 34–36, 67–68, 95–99). Petitioner disputes Patent Owner's position that the "conventional understanding" in 2012 was to position the cloth-covered portion of a THV below the patient's native leaflets. *Id.* (citing PO Resp., 87). Petitioner maintains that the prior art reference Cribier's implantation instructions contradict this argument[19] (citing Petition, 34–36), and that Patent Owner cites no corroborating evidence. Instead, PO relies on conclusory testimony from Dr. Brecker. *Id.*

---

[18] A. Linke et al., *Treatment of Aortic Stenosis with a Self-Expanding Transcatheter Valve: the International Multi-Centre ADVANCE Study*, 3S Euro. Heart J. 2672–84 (2014) ("Linke") Ex. 1101.

[19] We again note that the SAPIEN valve disclosed by Cribier and the prosthetic valve disclosed by Spenser are highly similar and are relied upon by Petitioner as teaching the same limitations of the challenged claims. *See* Section III.D.4.c *supra*; *see also* n.24 *infra*.

(citing POR, 87–89; *TQ Delta, LLC v. Cisco Sys., Inc.*, 942 F.3d 1352, 1358–59 (Fed. Cir. 2019)).

e. Objective indicia of nonobviousness

Petitioner argues that Patent owner has not provided any actual evidence of objective indicia of nonobviousness, specifically that that the ’538 patent solved a long-felt need. Pet. Reply. 28. Petitioner argues that, as in the related IPR2022-00556 (the “’556 IPR”) proceeding, Patent Owner did not identify any evidence that the claimed TAVR device requiring sparsely distributed fibers (again, this is not expressly claimed) attached to the outside of the frame would reduce or prevent PVL, and argues that Dr. Brecker’s conclusion that the sparsely distributed fibers allegedly illustrated in the ’538 patent’s figures addresses PVL is wholly conclusory and without objective supporting evidence. *Id.* at 28–29 (citing *Perfect Web Techs., Inc. v. InfoUSA, Inc.,* 587 F.3d 1324, 1333 (Fed. Cir. 2009); Ex. 2051 ¶ 38). Patent Owner argues that Dr. Brecker in fact testified that he had never seen, or implanted, any valve that is designed like the valves disclosed in the ’538 patent. *Id.* at 29 (citing Ex. 1073, 308–309, 312).

Petitioner further contends that Patent Owner cites data relating to a comparison between the mild PVL rates for Petitioner’s SAPIEN 3 and SAPIEN 3 Ultra THVs. Pet. Reply 29 (citing PO Response 5). However, argues Petitioner, Patent Owner provides no objective evidentiary support for the alleged PVL rates, and cites to no publications disclosing the mild PVL rates, but rather relies upon mere attorney argument made during

prosecution of the related '846 patent. *Id.* Petitioner relates that, during that prosecution, Patent Owner asserted that SAPIEN 3 had "mild PVL in 22.3% of cases, whereas, the SAPIEN Ultra had in only 7.2%." *Id.* at 29–30 (quoting Ex. 2076, 145–146). However, argues Petitioner, the article relied upon for this statement does not disclose the argued PVL numbers, nor does it mention the SAPIEN 3 Ultra TAVR. *Id.* at 30 (citing Ex. 1081). The article in question teaches that "trace and mild PVL after TAVI is often considered to be acceptable and benign." *Id.* (quoting Ex. 2076, 210). Petitioner alleges that Patent Owner has not explained how reduction in an "acceptable and benign" level of PVL demonstrates that the '538 patent solved a long-felt but unmet need. *Id.* (citing Ex. 1072, 224, 231–232).

Petitioner summarizes Patent Owner's evidence as reflecting that addressing PVL was more complex than adding "outwardly extending fibers" to the outside of the valve; Petitioner contends that it required a multitude of design changes and considerations that are not claimed in the '538 patent and were not novel in 2012. Pet. Reply 30.

Finally, Petitioner argues that Patent Owner has not attempted to prove (here) that SAPIEN 3 Ultra embodies the claimed features of the '538 patent and is coextensive with them, and that Patent Owner is consequently not entitled to a presumption of nexus. Pet. Reply 31 (citing *Polaris Indus., Inc. v. Arctic Cat, Inc.*, 882 F.3d 1056, 1072 (Fed. Cir. 2018)). Petitioner also argues that Patent Owner has not attempted to show that SAPIEN 3 Ultra's performance is a "direct result of the unique characteristics of the claimed invention." *Id.* (citing *Fox Factory, Inc. v. SRAM, LLC*, 944 F.3d

1366, 1373–74 (Fed. Cir. 2019). Rather, argues Petitioner, Patent Owner seeks to distinguish the asserted prior art on the basis that the outer seals taught by the prior art were "opaque due to density," despite the fact that the SAPIEN 3 Ultra's outer skirt is also opaque. *Id.* (citing PO Resp., 9–10, 49– 53).

f. Dr. Buller's testimony

Petitioner disputes Patent Owner's allegation that Dr. Buller's testimony was "implausible on significant matters." Pet. Reply 24 (quoting PO Resp. 48). According to Petitioner, Dr. Buller repeatedly explained that he does not interpret a patent drawing of a single embodiment to limit the dimensions of an outer seal, such as those disclosed in Spenser II or the challenged patents. *Id.* at 24–25 (citing Ex. 2052, 156, 160, 168, 174).

Petitioner also argues that, contrary to Patent Owner's assertions, Dr. Buller repeatedly explained that a person of ordinary skill in the art would not have drawn limiting conclusions regarding the dimensions of fibers from a drawing of a single embodiment in the '538 patent. Pet. Reply 25 (citing Ex. 2052, 156, 160, 168). Petitioner also notes that Dr. Buller also explained that the challenged patents fail to inform a skilled artisan on the "density of the fibers, the width of the fibers, [or] the length of the fibers," and that there is therefore "no teaching that allows you to come to any real conclusion about what [the valve] would collapse down to." *Id.* at 25–26 (citing Ex. 2052, 173, 174).

As noted in Section II.A above, we have adopted Petitioner's unopposed definition of a person of ordinary skill in the art. *See* Pet. Reply 20–21. Petitioner points out that the Board has previously rejected similar attacks against Dr. Buller's qualifications and found him qualified to provide opinions regarding similar subject matter. Pet. Reply 26 (citing *Edwards Lifesciences Corp. v Boston Scientific*, IPR2017-00060, Paper 64, at 4 (the "'060 IPR")). Petitioner contends that the Patent Owner in the '060 IPR similarly argued that Dr. Buller lacked "experience in the relevant technologies" because "he has never performed valve replacement procedure and has never implanted stent grafts." *Id.* at 27 (citing '060 IPR, Paper 64, at 10). Petitioner notes that the Board rejected these arguments, noting that the patentee "fail[ed] to provide a persuasive justification for why the fact that Dr. Buller has never performed a valve replacement procedure and has never implanted stent grafts matters, such that Dr. Buller's testimony should be given 'little or no weight.'" *Id.*

6. Analysis

Excepting the limitations reciting a fibrous network that allows "endovascularly delivering a heart valve through the access artery into an area proximal a native heart valve of the patient," and that the fibrous network "is in overlapping radial alignment with native valve leaflets," Patent Owner does not contest Petitioner's assertions with respect to how the prior art teaches the limitations of claims 1–8, 10–18, and 20 under Ground IV. *See* PO Resp. 11–89. On the contested issues, we are

unpersuaded by Patent Owner's arguments. Therefore, having considered Petitioner's arguments and Patent Owner's response as discussed above, and the evidence of record, we conclude that Petitioner has demonstrated by a preponderance of the evidence that challenged claims 1–8, 10–18, and 20 are obvious over Spenser and Spenser II. We explain further below.

Patent Owner's arguments with respect to the merits of Ground IV focus on: (1) the "endovascular delivery" limitation and the motivation to combine the prior art; and (2) the limitation requiring that the fibrous network be in "overlapping radial alignment with native valve leaflets." Bearing in mind that the burden of proving unpatentability rests upon Petitioner, we focus our analysis on Petitioner's assertions and Patent Owner's responsive arguments with respect to these limitations. PO Resp. 11–47, 73–89. Patent Owner also argues that evidence of objective indicia support a conclusion of nonobviousness. *Id.* at 2–11. Patent Owner further argues that we should afford the opinions of Petitioner's expert, Dr. Buller, little probative weight. *See* PO Resp. 47–53, 90–98. We address each of these arguments in turn.

a. Dr. Buller

We begin with our analysis of Dr. Buller's professional qualification as at least a person of ordinary skill in the art, an expert witness, and the weight to be given to his testimony.

Dr. Buller is a retired consultant cardiologist, with a medical degree[20] from University College London. Ex. 1003 ¶ 5. He is formerly the "Head of Interventional Cardiology at the Queen Elizabeth Hospital, Birmingham and the Lead Clinician for the Cardiac Catheterization Laboratories." *Id.* at ¶ 6. He has extensive experience in cardiac catheterization and cardiac stent implantation. *Id.* at ¶ 18, 20–24. Dr. Buller attests that he has had a close working relationship with the research and development departments in the medical device and pharmaceutical industries, and has served on the advisory boards for many of the major medical device manufacturers, including SCIMED, Boston Scientific, Medtronic, Cordis and Guidant/Abbott. *Id.* at ¶ 24.

We conclude that Dr. Buller has sufficient education and experience to qualify as an expert and to testify as to the perspective of a person of ordinary skill in the art. We find that Dr. Buller has experience as an interventional cardiologist with a working knowledge of heart valve designs and endovascular prostheses, as required by our definition of one of skill in the art. *See* Section II.A above. We find this particularly so in view of

---

[20] Dr. Buller was awarded a B.Sc. in 1977 and a M.B. B.S. in 1980. M.B. B.S. (Bachelor of Medicine, Bachelor of Surgery) is the primary medical school degree in the United Kingdom. *See* MBBS (Bachelor of Medicine & Bachelor of Surgery), *available at*: https://scholar.harvard.edu/narender/classes/mbbs-bachelor-medicine-bachelor-surgery (last visited January 30, 2023). It is the professional equivalent of an M.D. in the United States.

Dr. Buller's extensive experience with endovascular catherization and stent implantation, which relate intimately to a central issue of this *inter partes* review, *viz.*, whether the device claimed in the '538 patent can be delivered endovascularly. We acknowledge that Dr. Buller appears never to have personally performed a TAVR, but his knowledge of the device and the procedures appears to be intimate and thorough.

As Petitioner points out, the same arguments presented by Patent Owner here have been previously considered by the Board in the '060 IPR. In that related proceeding, we found that the Patent Owner had failed to sufficiently demonstrate why Dr. Buller should not be considered to qualify as an expert or to testify as to the perspective of a person of ordinary skill in the art. *See* '060 IPR, Paper 64 at 10–11. We find the same reasoning applies in the present proceeding.

Furthermore, with respect to the weight we should accord Dr. Buller's opinion testimony, we have considered the opinions expressed by each of the experts in this case and accord the appropriate weight to each of their opinions based on whether the opinion is credible and whether it is supported by credible evidence. *See, e.g.*, *Velander v. Garner*, 348 F.3d 1359, 1371 (Fed. Cir. 2003) ("It is within the discretion of the trier of fact to give each item of evidence such weight as it feels appropriate.").

b. "Delivered endovascularly"

We first note that the claims of the '538 patent do not require *transfemoral* insertion of the crimped valve, but rather only that the TAVR

be delivered "endovascularly," meaning only that the valve be delivered through the lumen of a blood vessel.[21] *See, e.g.*, Ex. 1001, col. 6, ll. 33–35, col. 10, ll. 32–35. Spenser expressly teaches that its prosthetic heart valves can be delivered endovascularly:

> An aspect of the present invention deals with the possibility of implanting the valve percutaneously, i.e., inserting the valve assembly on a delivery device similar to a catheter, then implanting the valve at the desired location *via a large blood vessel* such as the femoral artery, in a procedure similar to other known interventional cardiovascular procedures.

Ex. 1010, col. 2, ll. 6–12 (emphasis added). Specifically, Spenser teaches that:

> A typical size of an aortic prosthetic valve is from about 19 to about 25 mm in diameter. A maximal size of a catheter inserted into the femoral artery should be no more than 8 mm [i.e., 24F] in diameter. The present invention introduces a device, which has the ability to change its diameter from about 4 mm [12F] to about 25 mm [75F]. Artificial valves are not new; however, artificial valves in accordance with the present invention posses

---

[21] We note in passing here our disagreement with Petitioner's argument that the '538 patent's disclosure of a method of delivering the valve that is "passed through the aortic valve 202 and into the left ventricle 204," that "applies equally … direct-aortic procedures," which constitute a method of non-endovascular delivery. *See* Pet. Reply 16 (citing Ex. 1001, col. 19, ll. 21–24; also citing col. 6, ll. 38–42). Petitioner asserts that this description applies equally to non-endovascular delivery, such as direct-aortic procedures. Because a direct-aortic approach would pass, however briefly, through the lumen of the aorta (i.e., a bold vessel) to the site of delivery at the aortic valve, such an approach is endovascular.

> [*sic*] the ability to change shape and size for the purpose of delivery and as such are novel. These newly designed valves require new manufacturing methods and technical inventions and improvements, some of which were described herein.

Id. at cols. 27–28, ll. 64–7. Spenser thus teaches that, in its crimped, deployment conformation, its valve has a diameter of approximately 12F, which is well within the maximum allowable diameter of 24F for transfemoral insertion as argued by each party (see above).

Similarly, whether or not the "sparse fibers," argued by Patent Owner as attached to the outer surface of the invention as depicted in the '538 patent's figures are novel, we find Patent Owner's arguments with respect to this feature irrelevant to the issues at hand. None of the challenged claims of the '538 patent require that the fibers be sparse, or otherwise specifies a requisite density of the fibers, whether for endovascular deliverability or for sealing the implanted vessel. Rather, the claims require merely: "a plurality of radially extending fibers that extend outwardly of the outer frame" (claim 1 (incorporated into challenged claim 8) and claim 13). We will not import unrecited limitations from the '538 Specification into the challenged claims absent some reason to do so, and we find here none. *CollegeNet, Inc. v. ApplyYourself, Inc.*, 418 F.3d 1225, 1231 (Fed. Cir. 2005).

Patent Owner does not contest that embodiments of the TAVR taught by Spenser teach all of the structural elements of the TAVR device recited in challenged claims 1 and 11, with the exception of a "fibrous network" that can be delivered endovascularly and which "seals against the native valve leaflets of the patient." For such limitations, Petitioner relies (in Ground IV)

upon the teachings of Spenser II, and particularly Figure 22 and its associated disclosures in its Specification. For the reader's convenience, Figure 22 of Spenser is again reproduced below:

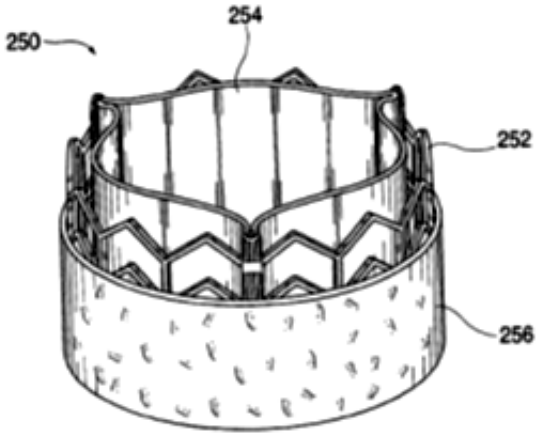

FIG. 22

Spenser II teaches that "Figure 22 illustrates a valve device, in accordance with another preferred embodiment of the present invention, wherein a layer of compressible material, such as a cloth material, is provided along an exterior surface of a stented valve." Ex. 1011 ¶ 85. More specifically, Spenser II teaches that:

> To reduce or prevent paravalvular leakage, a layer of compressible material 256 is disposed along an outer surface of the stent structure 252. The material may extend partially around the stent structure or may extend entirely around the stent structure, such as in the form of a sleeve. In one preferred embodiment, the compressible material is formed of polyethylene terephthalate (PET) and has a thickness ranging from about 1 to 5 mm. In certain configurations, the compressible material 256 may resemble *a cloth or fabric having small fibers extending from the surface of the material*. In various embodiments, *the fibers may be straight, curved or hook-*

> *shaped*. The compressible material expands after deployment at a treatment site. As the compressible material expands, *it fills the gaps between the stented valve and the surrounding tissue.* Accordingly, the compressible material creates a mechanical seal that prevents paravalvular leakage. In addition, the compressible material, and especially the fibers, may be adapted to encourage coagulation of blood to further fill the gaps and prevent leakage. In an alternative configuration, a tissue growth factor may be applied to the compressible material for promoting the growth of tissue into the material, thereby further sealing the gaps.

Id. at ¶ 145 (emphasis added). This teaches the claimed subject matter.

Spenser II also teaches that "the present invention provides new concepts of *percutaneous paravalvular repair*, including means for identifying the leak location, repair techniques, and *means for leak prevention that can be engineered into the prosthesis valve itself.*" Ex. 1011 ¶ 14 (emphasis added). Such means include:

> [A] compressible material, such as *a clot[h] or fabric, extends around an exterior portion of the stent*. The compressible material may be formed of polyethylene terephthalate (PET) and is configured to expand into the gaps. Furthermore, *fibers on the material may be configured to encourage coagulation of blood to further fills the gaps and prevent leakage*. In one variation, a tissue growth factor.

Id. at ¶ 55 (emphasis added).

Spenser and Spenser II both expressly teach that their TAVRs are meant to be capable of being delivered endovascularly, as recited in the claims. *See, e.g.*, Ex. 1010, col. 2, ll. 6–15; Ex. 1011 ¶¶ 11–13, 90. Indeed, the 12F diameter of the valve taught by Spenser II is well within the maximum allowable diameter of 24F, such that a person of ordinary skill in

the art could reasonably understand that there would be sufficient additional space to accommodate the "compressible … cloth or fabric," which Spenser II teaches can also be delivered endovascularly.

The ordinarily skilled artisan's understanding of Spenser II in this way is supported by Petitioner's evidentiary reference Norris, which further reflects the knowledge of such a person as of the '538 patent's filing. *See Standard Oil Co. v. American Cyanamid Co.*, 774 F.2d 448, 454 (Fed. Cir. 1985) (holding that a person of ordinary skill in the art is "presumed to be aware of all the pertinent prior art"), Norris is prior art to the '538 patent, having been published on April 12, 2011.[22] Norris is directed to:

> A compressible resilient fabric [that] can include a ground layer of knitted yarn, and a loop layer comprising a plurality of loops, each loop having a point knit into the ground layer. The fabric can be compressible from a[] non-compressed configuration, in which each loop has an apex extending substantially perpendicularly outward from the ground layer, into a compressed configuration, in which each loop is collapsed onto the ground layer.

Ex. 1074 Abstr.

---

[22] The '538 patent claims the priority benefit of US. Prov. Appl. Ser. No. No. 61/567,458 (the '458 application"), filed on December 6, 2011.

Figure 4 of Norris is reproduced below:

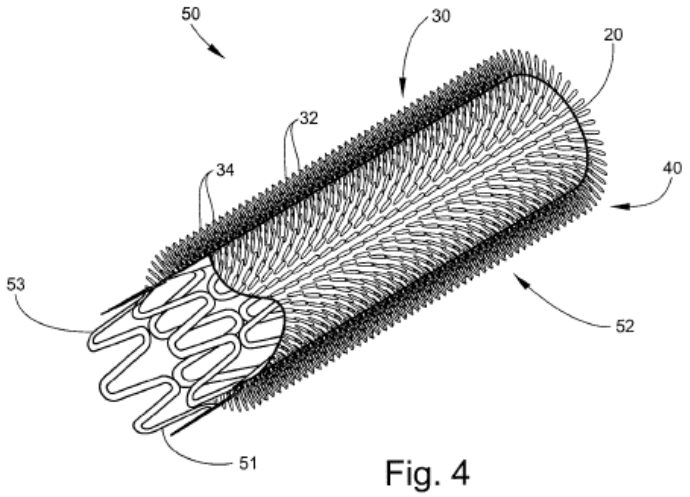

Figure 4 of Norris is a diagrammatic perspective view of a partially cut-away intraluminal sealing member on the exterior of a stent.

Figure 3 of Norris is reproduced below:

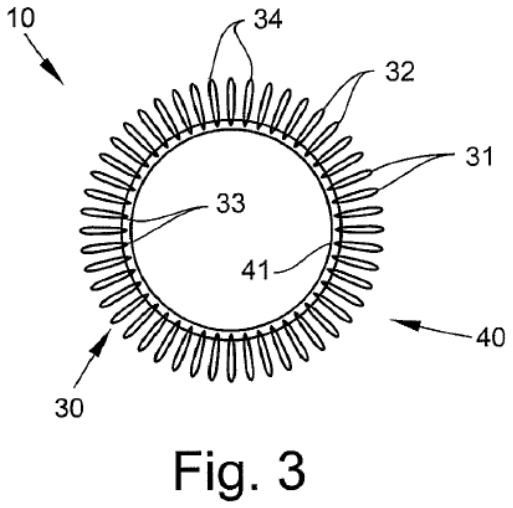

Figure 3 of Norris depicts a cross-sectional view of a tubular-shaped compressible resilient fabric in a non-compressed configuration

Norris teaches that:

> Medical devices such as vascular and endovascular grafts and stent-grafts can include fabric components that *function to promote sealing of the device to the lumen or structure in which it is implanted*. Insertion of such devices and fabric components into target sites can require that *the fabric be compressed and collapsed so as to be placed inside a delivery catheter or cannula*. When such a device having a fabric component is inserted to a target site and the delivery catheter is removed, at least the fabric component is often expected to rebound to approximately its original shape, structure, and dimensions.

Ex. 1074, col. 1, ll. 20–30 (emphasis added). In particular, with reference to Figures 3 and 4, Norris teaches that:

> [T]he implantable device **50** and the inner member **51** can be tubular in shape. Such tubular embodiments can be utilized in cardiovascular applications, *such as with a heart valve or stent-graft.* In such applications, the intraluminal sealing member **52** can be formed, wrapped, or attached about the radially expanding inner member **51**. In this manner, *when the device **50** is implanted in a target location, flow of blood between the exterior of the device **50** and the wall of the vessel can be restricted and/or prevented*.

Ex. 1074, col. 9, ll. 18–26 (emphases added).

To satisfy this implantation and blood-flow restriction requirement, Norris evidences that "embodiments of the compressible resilient fabric 10, device 50, system, kit, and method as described herein can be utilized in medical applications, including, for example, in vascular and *endovascular implants such as stents, stent grafts, and heart valves*." *Id.* at col. 10, ll. 45–49 (emphasis added). Specifically, Norris is evidence that it was known in

the art before the '538 patent that compressible cloth can be used to seal an endovascularly-delivered device, such as a heart valve:

> The compressibility and/or resiliency in the compressible resilient fabric **10** needed for particular applications can vary. For example, in some clinical situations, compressibility may be of greater concern in order *to compress the fabric 10 or device 50 comprising such fabric **10** into a small enough delivery catheter to reach a target implant site* .... Such balanced loop density and height **43** can be optimized for particular applications, for example, *a heart valve* or for a stent-graft for an aneurysm.

Id. at col. 8, ll. 23–39 (emphases added).

Figure 3 of Norris, reproduced above, evidences that "a plurality of radially extending fibers that extend outwardly of the outer frame," as recited in claim 13, was known, even if it is debatable whether the radially-extending loops of Norris can be said to "terminate in an end thereof outwardly of the outer frame." However, whether Norris's fibers are identical to those of the claims is immaterial because Spenser II teaches that "[i]n certain configurations, the compressible material 256 may resemble a cloth or fabric having small fibers extending from the surface of the material. In various embodiments, the fibers may be straight, curved or hook-shaped." Ex. 1011 ¶ 145. A person skilled in the art would likely realize that compressible fibrous cloths, whether of Norris or Spencer II, were known in the art and used on endovascularly deliverable valve stents for preventing leakage (i.e., PVL) around the implanted TAVR. *See, e.g.*, Ex. 1011 ¶ 145; Ex. 1074, col. 8, ll. 23–55.

Patent Owner points to the calculations of Dr. Brecker, and the potential "bunching" of the sealing cloth to argue that the addition of an outer cloth, as taught by Spenser II and evidenced by Norris, would render the TAVR of Spenser incapable of being inserted transfemorally, or otherwise endovascularly. We do not find these arguments persuasive. First of all, both Spenser II and Norris expressly teach that prior art TAVRs, with outer compressible cloth sealing layers, were intended for endovascular delivery. *See* Ex. 1011 ¶¶ 13, 14, 19; Ex. 1074, col. 10, ll. 45–49.

Secondly, Dr. Brecker calculates that:

> Spenser II provides that its cloth "has a thickness ranging from about 1 to 5 mm." Spenser and Levi both teach a valve that has a diameter of 25 mm and 26 mm respectively when fully expanded. Accordingly, even if we were to assume a POSITA used the thinnest possible cloth in Spenser II, Petitioner's proposed combination using the smaller Spenser 25 mm diameter (12.5 mm radius) expanded valve covered by a 1 mm cloth resulting in a 27 mm diameter (13.5 mm radius) valve…. From this we can conservatively estimate how much cloth is required for a cross-section of the proposed device (A_{cloth}) by calculating the total area of a cross-section of the cloth-covered valve ($\pi*(13.5\text{ mm})^2$) and subtracting the area of a cross-section of just the valve ($\pi*(12.5\text{ mm})^2$).
>
> $A_{cloth} = \pi*(13.5\text{ mm})^2 - \pi*(12.5\text{ mm})^2 = 81.68\text{ mm}^2$
>
> Accordingly, Petitioner's proposed combination requires 81.68 mm^2 of outer cloth in a given cross-section of the device.
>
> Petitioner asserts that Spenser's device, when crimped—without the cloth—would have a diameter of about 4 mm. The cross-section area of the crimped valve would therefore have an area of 12.57 mm^2 (A crimped = $\pi*(2\text{ mm})^2 = 12.57\text{ mm}^2$). If the 81.68 mm^2 cloth were added to the 12.57 mm^2 of crimped

> valve, the cloth-covered crimped valve would have a total area of 94.25 mm^2. Even if we were to assume that the cloth would form a perfect circle around the crimped valve, and no portions of the cloth would bulge more in certain areas (as Russell indicates)—two assumptions that artificially reduce the diameter significantly—this would mean that the radius of the crimped Spenser valve with the uncompressed Spenser II outer cloth would be at a minimum 5.48 mm.
>
> $$\text{Radius}_{\text{crimped}} = \sqrt{(94.25/\pi)}$$
>
> Accordingly, using conservative estimates, Petitioner's proposed combination of Spenser's valve with the Spenser II's outer cloth would have a diameter of at least 10.96 mm (when the valve is crimped and the cloth uncompressed) … over 36% too large for transfemoral delivery and endovascular delivery more generally. While Spencer II describes its cloth as "compressible material," there is no information or data presented on how compressible the cloth is. Furthermore, in my clinical experience of compressing such devices, pressure on one area of the cloth leads to bunching and expansion in another and therefore it is unlikely there would be a large reduction in the achieved caliber of the device (and a large reduction would be required to achieve 8 mm).…
>
> Thus, adding Spenser II's cloth to either Spenser or Levi would render the resulting device inappropriate for endovascular delivery.

Ex. 2051 ¶¶ 62–64 (citations and illustration omitted).

We agree with Dr. Brecker that Spenser II does not expressly address the magnitude of compressibility of its "compressible material, such as a clot[h] or fabric," nevertheless, the reference expressly teaches that its cloth or fabric *is* compressible; a factor which does not enter into Dr. Brecker's calculations. Moreover, a person of skill in the art would have known of

Norris' evidence of a compressible material and would have read Spenser II with such knowledge, by which the compressibility of such material expressly renders it suitable for endovascular delivery of heart valves. *See* Ex. 1074, col. 9, ll. 18–21; *see also Standard Oil*, 774 F.2d at 454.

Specifically, Norris evidences that:

> In the compressed configuration **41**, the fabric **10** can have a thickness **44** in the range of about 0.004–0.008 inches [0.102–0.203 mm]. Such a thin compressed configuration **41** can allow the fabric **10** to be easily inserted into a delivery catheter along with an intraluminal medical device, such as the device **50**.

Ex. 1074 cols. 7–8, ll. 66–3. The compressible cloth taught by Norris as suitable for endovascularly-delivered TAVRs is thus approximately an order of magnitude thinner than estimated by Dr. Brecker. Given this discrepancy, we can discount Dr. Brecker's calculations. Moreover, the evidence of Norris supports our conclusion that an ordinarily skilled artisan would have read Spenser II and understood that the cloth covering disclosed by the reference would allow for endovascular delivery.

c. Motivation to combine the references

Patent Owner also argues that a person of ordinary skill in the art would not have been motivated to combine the teachings of Spenser and Spenser II. *See* PO Resp. 37–40. Patent Owner argues that: (1) A person of ordinary skill in the art would not be motivated to add Spenser II's outer cloths to Spenser's TAVR, which is meant for endovascular delivery. *Id.*

We disagree. Both Spenser II and the evidentiary prior art reference

Norris provide ample motivation for combining Spencer II's compressible cloth, as a sealing material, to the TAVR disclosed by Spenser. For example, Spenser II teaches (and Patent Owner concedes) that the problem of PVL was well known in the art at the time of invention: "Cardiac valve implantation is well known in the art. Less well addressed is how to detect possible leaks between the valve and surrounding blood vessel, how to seal such leaks, or how to design the valve such that it automatically seals the leaks." Ex. 1011 ¶ 2. Figure 22 depicts Spenser II's compressible cloth, which, added to the external surface of a TAVR, acts "to reduce or prevent paravalvular leaks." *Id.* at ¶ 144; *see also id.* at ¶¶ 55, 145 ("To reduce or prevent paravalvular leakage, a layer of compressible material 256 is disposed along an outer surface of the stent 15 structure 252).

Similarly, Norris also evidences the existence of motivation for a skilled artisan to add a compressible outer cloth, as in Spenser II, to a TAVR, as in Spenser, in expressly stating:

> Medical devices such as vascular and endovascular grafts and stent-grafts can include fabric components that function to promote sealing of the device to the lumen or structure in which it is implanted.… Regaining its [i.e., the fabric's] original shape, structure, and dimensions [once implanted] is important to achieve an adequate seal between the exterior of the device and the lumen or structure in which it is implanted. This is critical because any gaps or voids between the device and the implant site can prevent a reliable seal, which can lead to complications and/or device failure.

Ex. 1074, col. 1, ll. 20–35. We conclude that both Spenser II and the prior art Norris reference show there would have been motivation for a person of

ordinary skill in the art to combine the compressible outer cloth of Spenser II with the TAVR disclosed by Spenser so as to reduce PVL and its associated serious problems.

Patent Owner also alleges that Petitioner has employed impermissible hindsight reconstruction in combining the teachings of Spenser and Spenser II. We do not find this argument persuasive.

> Any judgment on obviousness is in a sense necessarily a reconstruction based upon hindsight reasoning, but so long as it takes into account only knowledge which was within the level of ordinary skill at the time the claimed invention was made and does not include knowledge gleaned only from applicant's disclosure, such a reconstruction is proper.

In re McLaughlin, 443 F.2d 1392, 1395 (C.C.P.A. 1971). As we have explained above, Spenser II expressly teaches, and the prior art Norris reference certainly evidences it was well known, the combination of a compressible outer cloth with a TAVR for heart valve replacement procedures, with the explicit purpose of reducing or eliminating PVL. *See, e.g.*, Ex. 1011 ¶¶ 55, 145, 155; Ex. 1074, col. 9, ll. 18–26.

Furthermore, Norris evidences that it was well known in the art, at the time of invention, that "[m]edical devices such as vascular and endovascular grafts and stent-grafts can include fabric components that function to promote sealing of the device to the lumen or structure in which it is implanted." Ex. 1011, col. 1, ll. 20–23. Norris further evidences that a compressible cloth was known to be used with endovascularly-delivered "cardiovascular applications, such as with a heart valve or stent-graft." *Id.* at col. 9, ll. 20–21. This all supports the conclusion that a person of skill in

the art would have been motivated to combine the relevant teachings of Spenser and Spenser II to reduce or prevent paravalvular leakage.

In short, Patent Owner points to no requisite knowledge on the part of a skilled artisan that could have been gleaned *only* from the disclosures of the '538 patent's Specification or claims. *McLaughlin*, 443 F.2d at 1395. We consequently conclude that Patent Owner's arguments in this respect are without merit.

d. "Overlapping radial alignment with the native valve leaflets"

Patent Owner also argues that the limitation reciting that the fibrous network is in "in overlapping radial alignment with native valve leaflets" is not obvious over the combination of Spenser and Spenser II. PO Resp. 84–89. We conclude that Patent Owner's arguments do not overcome Petitioner's showing, by a preponderance of the evidence, that Spenser and Spenser II teach or suggest the contested limitation.

First, we do not accept Patent Owner's argument that the claim term "overlapping radial alignment" requires that the fibrous network (i.e., the compressible cloth covering of Spenser II) completely overlap the native valve leaflets. The Specification of the '538 patent is silent with respect to the alignment of the prosthetic valve within the native valve, and is also silent with respect to the degree of overlap (complete or otherwise) between the fibrous network extending outwardly from the outer frame of the prosthetic valve and the native valve leaflets. At most, the Specification discloses that:

> [B]y inflating the balloon within the delivery system. This deploys the frame **34** to the predetermined expanded diameter **46** and advances the frame **34** into engagement with the aortic annulus **210**, thereby sealing the aortic annulus **210** such that fluid is permitted to pass from the left ventricle **204** only through the valve **32**.

Ex. 1001, col. 11, ll. 32–37. Consequently, we look to the ordinary and customary meaning" of the claim term "overlapping" as would have been understood by a person of ordinary skill in the art at the time of the invention. *See Phillips*, 415 F.3d at 1312–13. We hold that the use of the claim term "overlapping radial alignment," without any additional qualifier, encompasses any degree of radial overlap between the fibrous network and the native valve leaflets, whether complete or partial.

Patent Owner does not argue that the outer frame of the stent of the prosthetic heart valve is not in at least partial overlapping radial alignment with the native leaflets; indeed, such an alignment is necessary, because the frame's mechanical displacement of the valves laterally in the "open" position is necessary to prevent the valve leaflets from interfering with the operation of the leaflets of the prosthetic valve itself. A detail of Figure 2 of the '538 patent depicts placement of the claimed prosthetic valve at the site of implantation in the aortic valve. Figure 2 is reproduced, in relevant part, below:

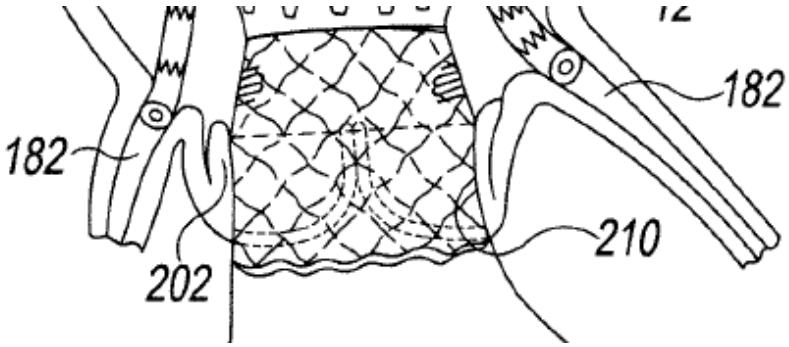

Figure 2 of the '538 patent depicts the cylindrical outer frame (with internal prosthetic leaflets depicted by dashed line) located in position in the native aortic valve and engaged with aortic annulus 210

Note that, in this position, native leaflets 202 are pressed laterally by the expanded outer frame so that they cannot close and interfere with the function of the prosthetic leaflets.

Patent Owner argues that the compressible cloth of Spenser II does not cover enough of the outer frame to be in overlapping radial alignment with the native leaflets, but is only in contact with the annulus of the aortic valve.

Patent Owner's argument fails, however, in view of the express teachings of Spenser II. Specifically, Spenser II teaches that:

> To reduce or prevent paravalvular leakage, a layer of compressible material 256 is disposed along an outer surface of the stent structure 252. The material may extend partially around the stent structure *or may extend entirely around the stent structure, such as in the form of a sleeve*. In one preferred embodiment, the compressible material is formed of polyethylene terephthalate (PET) and has a thickness ranging from about 1 to 5 mm.

Ex. 1011 ¶ 145 (emphasis added).[23] In sum, a person of ordinary skill in the art, reading Spenser II, would understand that, if the compressible material that is disposed along the outer surface of the stent extends entirely around the stent, then it would, necessarily, be in radial alignment with the native leaflets around the circumference of where the outer frame presses the native leaflets laterally (as depicted in Figure 2 of the '358 patent). We consequently conclude that Spenser II teaches the limitation reciting "wherein the transcatheter aortic valve is positioned so that the fibrous network of the transcatheter aortic valve assembly is in overlapping radial alignment with native valve leaflets."

e. Objective indicia of nonobviousness

We have also considered that Patent Owner argues that evidence of objective indicia of nonobviousness supports a conclusion that the challenge claims are nonobviousness over the prior art. Specifically, Patent Owner argues that the invention disclosed by the '538 patent met a long-felt need for a TAVR that reduces or eliminates the problem of PVL present in heart valve replacement. *See, e.g.*, PO Resp. 3–4 (quoting Ex. 2076, 135, 136

---

[23] We note that, because this passage of Spenser II also teaches that the compressible cloth can cover the entire external surface of the stent, it also teaches the limitations of claims 1 and 11 reciting "wherein the fibrous network extends over at least two circumferentially extending rows of grids formed in the open cell configuration." *See* Ex. 1001, col. 21, ll. 53–55.

(Statement by Patent Owner during prosecution of the related '846 patent: "A long-felt need existed to reduce PVL while maintaining small valve profile, and multiple attempts to do so were not leading towards the claimed invention")).

However, Patent Owner does not point to any actual evidence to support its contention that its invention specifically addressed and solved a long-felt need in the field of TAVR. *See generally* PO Resp. Rather, Patent Owner relies upon attorney statements made during the prosecution of this family of patents, and the conclusory opinion testimony of its expert, Dr. Brecker. As we stated in our Decision to institute *inter partes* review in related IPR2022-00556:

> Virtually all of Patent Owner's arguments with respect to its meeting a long-felt unmet need derive support from arguments made by Patent Owner (the then-Applicant) during the prosecution of the '236 patent, arguments which are necessarily, of their very nature, self-serving. Patent Owner points to little objective evidence that its invention was recognized as having met a long-felt need, rather, its arguments were directed to showing only that a putative need existed and had not yet been met. Patent Owner presents no evidence that its valve met a need that had not been previously met by the prior art (i.e., by the art upon which Grounds 1–6 are based, particularly Walther and Spenser II).

IPR2022-00556, Paper 10 at 55.

In his Second Declaration, Dr, Brecker notes that TAVR was a revolutionary advance in treating heart disease, but that paravalvular leakage was a significant problem. *See* Ex. 2051 ¶¶ 42–43. But, Dr. Brecker points

to no evidence to show a nexus between the alleged long-felt need to address the issue of paravalvular leakage and the claimed invention. *Id.* ¶¶ 36–44.

To be accorded substantial weight in an obviousness analysis, the evidence of objective indicia of nonobviousness must have a "nexus" to the claims, i.e., there must be "a legally and factually sufficient connection" between the evidence and the patented invention. *Henny Penny Corp. v. Frymaster LLC*, 938 F.3d 1324, 1332 (Fed. Cir. 2019) (citing *Demaco Corp. v. F. Von Langsdorff Licensing Ltd.*, 851 F.2d 1387, 1392 (Fed. Cir. 1988)). The correspondence between the objective evidence and the claim scope is part of determining if there is a nexus, not something that follows once a nexus is established (or presumed) on the basis that the asserted objective evidence is tied to a specific product and that product embodies the claimed features and is coextensive with them. *Id.*; *see also WMS Gaming Inc. v. Int'l Game Tech.*, 184 F.3d 1339, 1359 (Fed. Cir. 1999). If "the asserted objective evidence is tied to a specific product and that product 'embodies the claimed features, and is co-extensive with them,'" then the objective evidence is entitled to a rebuttable presumption of nexus. *Id.* (quoting *Polaris*, 882 F.3d at 1072; *see also Fox Factory*, 944 F.3d at 1375).

Our analysis begins with a first step of establishing whether a nexus between the evidence and the claimed invention exists, and then analyzing the strength of the evidence. *See, e.g., Henny Penny*, 938 F.3d at 1332–33 (addressing first the existence of a nexus and then turning to analysis of the evidence of secondary considerations). Patent Owner's argument fails at the first step of this analysis for the simple reason that Patent Owner has failed

to adduce any *objective* evidence of a long-felt need for its specific invention, or that the specific claimed invention met that long-felt need. The evidence of record demonstrates that the problem of PVL was one of considerable concern to the field of heart-valve replacement. *See, e.g.*, Ex. 1074, col. 1, ll. 33–35 ("This [i.e., sealing gaps between valve and vessel lumen] is critical because any gaps or voids between the device and the implant site can prevent a reliable seal, which can lead to complications and/or device failure").

Patent Owner points to Petitioner's SAPIEN Ultra 3 TAVR valve as embodying the invention claimed in the '538 patent. *See* PO Resp. 5–6. However, Patent Owner has failed to provide any objective evidence, beyond its own statements made during prosecution and the opinion of its expert, to demonstrate that any such long-felt need was alleviated *specifically* by the invention claimed in the '538 patent. We consequently conclude that Patent Owner has failed to adduce objective evidence sufficient to establish a nexus between the long-felt need and Appellant's claimed invention. Absent any such evidence, Patent Owner's argument that objective indicia render the claims of the '538 patent nonobvious must fail. *See Perfect Web Techs., Inc. v. InfoUSA, Inc.*, 587 F.3d 1324, 1332–33 (Fed, Cir. 2009).

f. Summary for Ground IV

We have considered Petitioner's and Patent Owner's arguments, as well as the evidence of record, and based upon consideration of these as a

whole, we conclude that Petitioner has shown by a preponderance of the evidence that claims 1–8, 10–18, and 20 of the '538 patent are unpatentable. *See, e.g.*, *WBIP, LLC v. Kohler Co.*, 829 F.3d 1317, 1328 (Fed. Cir. 2016) ("[T]he strength of each of the *Graham* factors must be weighed in every case and must be weighted *en route* to the final determination of obviousness or non-obviousness").

E. Claims 9 and 19 (Grounds I, III and VII)

Claims 9 and 19 depend from claims 1 and 11, respectively, but are otherwise identical, reciting "wherein the fibrous network includes fibers extending radially inwardly from the outer frame." Ex. 1001, col. 22, ll. 41–43, col. 23, ll. 10–12. Based on their dependency from claims 1 and 11, these claims also require, *inter alia*, the *endovascularly delivered* limitation discussed above. The patentability of claims 9 and 19 are challenged in Grounds I, III, and VII. Critically, however, claims 9 and 19 are not challenged based on the teachings of Spenser and Spenser II under Ground IV, which dooms Petitioner's challenges to these claims' patentability because, as we explain below, we find Petitioner's reasoning based on the other asserted prior art combinations lacking.

Figure 13 of the '538 patent's Specification illustrates an embodiment where fibers extend radially inwardly from the outer frame as claimed, and is reproduced below:

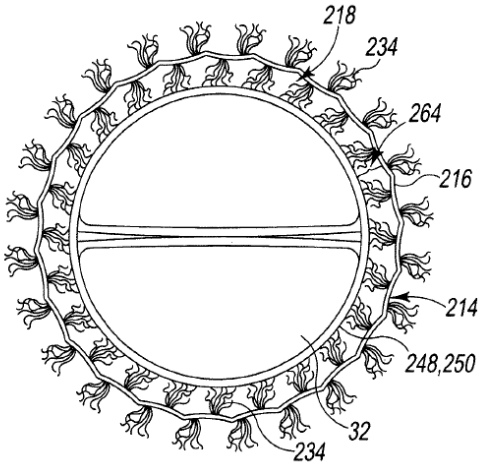

Figure 13 of the '538 patent is a longitudinal view of the prosthetic heart valve depicts fibers 264 extending radially inwardly from the outer frame

1. Overview of Walther

Petitioner relies upon Walther as teaching the limitations of claims 9 and 19. Walther is an article published in the European Journal of Cardio-thoracic Surgery that bears a copyright date of 2011. Ex. 1007, 1120. Petitioner contends that Walther was published online on April 3, 2011, and qualifies as prior art under pre-AIA 35 U.S.C. § 102(b). Pet. 19–20. Patent Owner argues that Petitioner has failed to demonstrate that Walther is available as prior art. Prelim. Resp. 86–88. We address this argument below.

Walther is directed to a method of deploying a trans-catheter valve into a previously implanted degenerative bioprosthetic valve. Ex. 1007, 1120. Specifically, Walther describes implanting an Edwards SAPIEN THV cloth valve, "which is identical to the SAPIEN model, but has an added

outer cloth for implantation into a degenerative bovine pericardium, Carpentier-Edwards Perimount (CEP) bioprosthetic valve." *Id.* Walther discloses that:

> The CEP surgical valves are made with a base that is more rigid than other valves. When a SAPIEN™ valve is expanded in the CEP valve, the rigid base does not easily conform to the profile of the expanded stent frame, which leaves gaps between the two valves, resulting in higher paravalvular leak. The addition of an outer cloth to the SAPIEN™ cloth valve is designed to reduce paravalvular leak by creating a seal between the two valves and improve resistance to migration with better 'fit' within surgical Perimount valves.

Id. Additionally, Walther discloses that the outer cloth "reduce[s] paravalvular leak," "increase[s] 'fit' within EW Perimount valves [a benchtop valve]," and "promote[s] tissue ingrowth, which further decreases paravalvular leakage." *Id.*

Figure 1 of Walther is reproduced below:

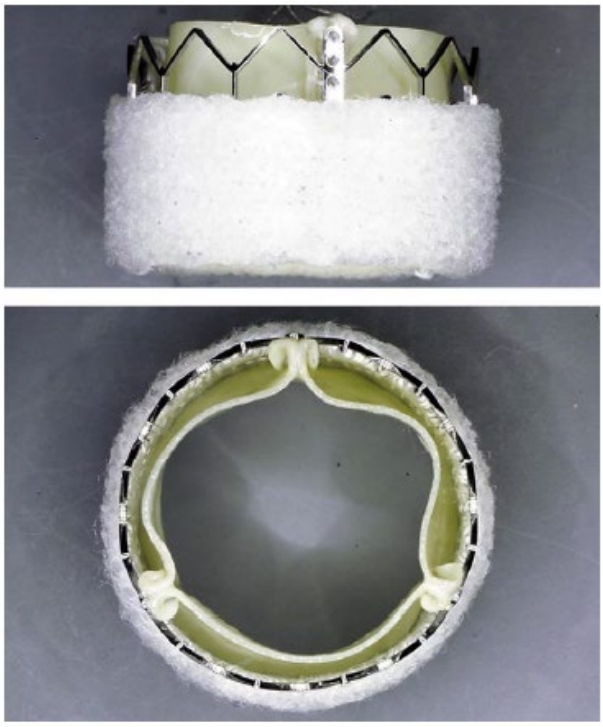

Fig. 1. Cloth valve.

Figure 1 of Walther depicts lateral (top) and longitudinal (bottom) of the SAPIEN THV

Figure 1 of Walther provides two photographic views of the SAPIEN THV with a cloth encircling the lower two thirds of the valve. *Id.* at Fig. 1, 1121. Walther describes deploying the SAPIEN valves inside "various CEP valves" *via* the 33 F Ascendra system. *Id.* at 1121.

2. Petitioner's arguments

Petitioner relies upon Walther as teaching this limitation in each of Grounds I, III, and VII, in which claims 9 and 19 are challenged. Patent Owner contends that Walther's outer cloth, (.e., the fibrous network)

includes fibers that extend radially inwardly from SAPIEN's outer frame, as shown in Petitioner's annotated detail of Figure 1 (reproduced below):

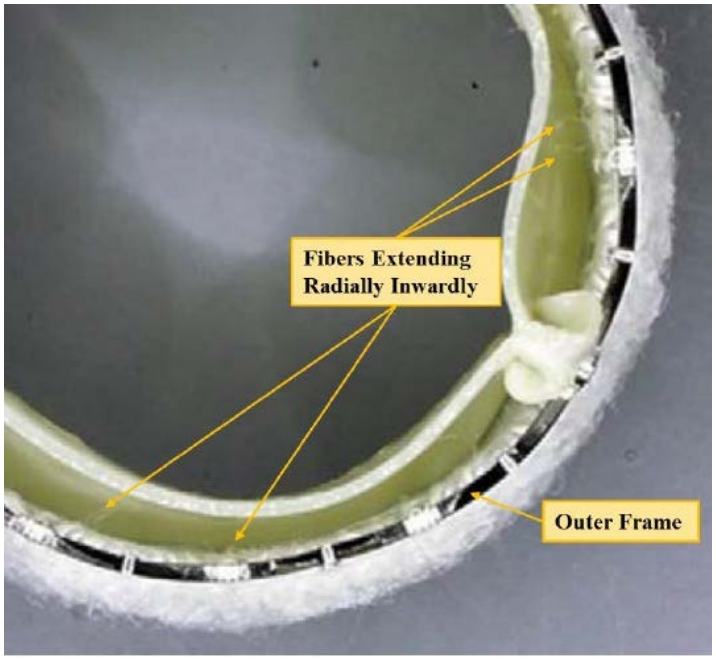

Petitioner's annotated detail of Walther's Figure 1

Pet. 81, 41.

Patent Owner does not expressly contest Petitioner's arguments with respect to claims 9 and 19, specifically. *See generally* PO Resp.

3. Analysis

Claims 9 and 19 depend from independent claims 1 and 11, respectively, and therefore incorporate all of the limitations of those claims. *See Monsanto Co. v. Syngenta Seeds, Inc.*, 503 F.3d 1352, 1357 (Fed. Cir. 2007) (holding that "[a] claim in dependent form shall be construed to incorporate by reference all the limitations of the claim to which it refers" (quoting 35 U.S.C § 112, ¶ 4 (2000)). We consequently look to see whether

a person of ordinary skill in the art would find claims 1 and 11 to be obvious over the combination of Cribier and Walther (Ground I), Spenser and Walther (Ground III), or Levi and Walther (Ground VII), which are the only Grounds in this *inter partes* review upon which claims 9 and 19 are challenged.

In each of these Grounds, Petitioner relies upon Walther as teaching the limitations of claims 1 and 11 reciting "wherein the transcatheter aortic valve assembly includes a fibrous network positioned at least partially radially outwardly of the outer frame." This is achieved either by adding the outer cloth of Walther to the outer frame of the prosthetic valve of Cribier or Spenser, or by substituting Walther's outer cloth for Levi's "outer skirt." *See* Pet. 32–33, 63–66, 94 ("Ultimately, the combination of Levi with Walther … would have merely entailed substitution of one known element (outer cloth/[]) for another (Levi's outer skirt) to yield the predictable results of reducing PVL"). As we explain below, we conclude that Petitioner has failed to show, by a preponderance of the evidence, that the device resulting from the combination of Walther's outer cloth with the TAVR device of either Cribier, Spenser, or Levi would be capable of being delivered to the aortic valve endovascularly, as required by claims 1 and 11. Consequently, because Petitioner has failed to demonstrate that these combinations relying upon Walther are endovascularly deliverable, we conclude that Petitioner has failed to demonstrate that dependent claims 9 and 19, which incorporate this requirement, are unpatentable.

a. Petitioner's arguments

Petitioner contends a person of ordinary skill would have understood that Walther, when combined with the SAPIEN-type prosthetic valves taught by Cribier, Spenser, or Levi[24], would have been endovascularly deliverable to the site of implantation in the aortic valve for essentially the same reasons. Pet. 23–27, 55–59, 87–88. Specifically, Petitioner argues that, by November 2012, those of skill in the art understood that PVL could occur with a SAPIEN-type valve. *Id.* at 23 (citing, e.g., Ex. 1012, 354; Ex. 1022, 2194; Ex. 1003 ¶ 106). Petitioner contends that a skilled artisan would therefore have been motivated to apply Walther's technique for reducing PVL (i.e., adding an outer cloth) to a known device (SAPIEN), which was ready for improvement and which would yield predictable results. *Id.* (citing *KSR*, 550 U.S. at 416; (Ex. 1003 ¶ 106).

Petitioner also contends that a person of ordinary skill in the art would have had a reasonable expectation of success in deploying the cloth-covered

---

[24] Cribier expressly discloses the SAPIEN valve. Ex. 1012, 348. Patent Owner and its expert acknowledge that the commercial embodiment of the prosthetic valve taught by Levi is the SAPIEN 3. *See* PO Resp. 5; Ex. 2051 ¶ 101. Spenser does not specifically disclose a SAPIEN prosthetic valve, however, the SAPIEN Instructions for Use ("IFU") identify Spenser as potentially covering SAPIEN. *See* Ex. 1003 ¶ 166l Ex. 1040, 8 ("These products are manufactured and sold under one or more of the following US patent(s): … 7,510,575 [Spenser]"). Patent Owner does not dispute that the prosthetic valve disclosed by Spenser covers a SAPIEN valve.

SAPIEN in a native aortic valve. Pet. 24 (citing Ex. 1003 ¶ 107). Petitioner notes that Walther describes the successful balloon deployment of the cloth-covered SAPIEN and concludes that the valve "demonstrated excellent hydrodynamic performance" and that an in-patient procedure is "feasible." *Id.* (citing Ex. 1007, 1125). Furthermore, argues Petitioner, by 2012, SAPIEN valves had been successfully and repeatedly implanted within native aortic valves. *Id.* (citing Ex. 1003 ¶ 107; Ex. 1012, 347, 355; Ex. 1009, 515–517; Ex. 1043). Petitioner asserts that persons of ordinary skill in the art would consequently have reasonably expected success in implanting the cloth-covered SAPIEN into a patient's aortic valve. *Id.* (citing Ex. 1003 ¶ 107).

Petitioner also contends that a skilled artisan would have been motivated to "endovascularly" position the cloth-covered SAPIEN. Pet. 24 (citing Ex. 1003 ¶¶ 108–110). Petitioner asserts that endovascular delivery was preferable to other forms of delivery, such as open-heart surgery or transapical delivery, because it was less invasive. *Id.* (citing Ex. 1003 ¶¶ 108–110; Ex. 1009, 515–516; Ex. 1020, 52). According to Petitioner, by November 2012, SAPIEN valves had been successfully delivered through different blood vessels, including the femoral artery (as in Cribier) and the common iliac artery. *Id.* (citing Ex. 1012, 353; Ex. 1043, 273–276). Petitioner notes that the common iliac artery is nearer the heart than the femoral artery and provides an alternative delivery route in cases where the femoral artery is too small or calcified for safe delivery. *Id.* (citing Ex. 1043, 273–276; Ex. 1003 ¶¶ 102, 109).

Petitioner also argues that a person of ordinary skill in the art would have possessed the necessary skills and equipment to adapt Walther's cloth-covered SAPIENs for transfemoral delivery, if any adaption was necessary. Pet. 25 (citing Ex. 1003 ¶ 111). Furthermore, argues Petitioner, by 2012, it had developed delivery systems having smaller diameters than those initially used with SAPIEN, which enabled endovascular delivery of valves having greater diameter than SAPIEN alone. *Id.* (citing Ex. 1036, 295–297; Ex. 1037 ¶¶ 5–6; Ex. 1003 ¶ 111). Furthermore, argues Petitioner, by 2012, Petitioner had adopted new frame metals that reduced the profile and had also adapted the frame and leaflets to create additional space for an outer seal. *Id.* at 26 (citing Ex. 1008, col. 6, ll. 31–49, cols. 15–17, ll. 33–18). Petitioner contends that those skilled in the art would have therefore found it obvious to utilize one or more of these known techniques to adapt the cloth-covered SAPIEN for transfemoral delivery. *Id.* (citing Ex. 1003 ¶ 111).

Petitioner points out that the '538 patent does not claim or disclose how to size the valve for endovascular delivery. Pet. 26. Petitioner therefore argues that Patent Owner cannot argue that the adaptation of the cloth-covered SAPIEN for endovascular delivery would have been beyond the skill of those in the art. *Id.* (citing, e.g., *Smith & Nephew, Inc. v. Rea*, 721 F.3d 1371, 1380–81 (Fed. Cir. 2013)).

Petitioner makes essentially the same arguments for the combination of Spenser and Walther (Ground III) and Levi and Walther (Ground VII) as it makes for the combination of Cribier and Walther above (Ground I). *See* Pet. 23–27, 55–59, 87–88.

b. Patent Owner's Response

Patent Owner's response to Petitioner's arguments have been presented in detail in Section II.D.4.a above. Briefly, Patent Owner contends that: (1) Petitioner fails to provide any dimensional details, including a crimp profile, with respect to any of the combinations of references relied upon in Grounds I, II, or VII that would suggest to a person of ordinary skill that the combined prosthetic valve device could be delivered endovascularly; (2) a person of skill in the art would not have been motivated to add an outer cloth/compressible material to a TAVR device intended for endovascular delivery; and that (3) Petitioner's arguments are impermissibly derived from hindsight. *See* PO Resp. 11–46.

With respect to Walther specifically, Patent Owner argues that the evidence of record indicates that a TAVR device with a Walther-like outer cloth requires a 33F sheath, which exceeds the 24F maximum for transfemoral delivery. PO Resp. 16. Patent Owner asserts that there is no evidence that such a large sheath could be delivered by any other endovascular route. *Id.* (citing Ex. 2052 90–92). Patent Owner's expert, Dr. Brecker opines that:

> Walther's thick outer cloth precludes endovascular delivery. I'm not aware of any TAVR endovascularly-delivered by any route with such a thick outer cloth. Walther's valve is for a non-endovascular transapical approach where "tight crimping is not an issue" …. I am not aware of any TAVR with an outer cloth

> like the ones seen in Walther, Spenser-II, and Cheung, that has ever been endovascularly delivered by any route.

Id. at 17 (quoting Ex. 2051 ¶ 89 (internal citations omitted).

Patent Owner adds that Petitioner's expert, Dr. Buller, acknowledged that he was not aware of any TAVR device with an outer cloth like the ones seen in Walther being delivered transfemorally or *via* the common iliac. PO Resp. 19–20 (citing Ex. 2052, 105, 107).

Patent Owner further argues that Petitioner has failed to account for the fact, as Dr. Brecker points out, that it would have been well-known that a Walther-like outer cloth would "bunch," adding significantly to its diameter. PO Resp. 21–24 (citing Ex. 2051 ¶¶ 95–96. Patent Owner contends that the only endovascularly-deliverable TAVR with an outer covering that Petitioner has identified as prior art is Levi. PO Resp. 27 (citing Ex. 2052, 19, 225). Patent Owner asserts that Levi's outer skirt is approximately 21 times thinner than Walther's outer cloth, and that this indicates that a TAVR with a thick, bulky Walther/Spenser II-like outer covering could not be delivered endovascularly. *Id.* (citing Ex. 2051 ¶¶ 101–104).

Nor, argues Patent Owner, is there any evidence that a TAVR device with Walther's outer cloth covering could have been delivered endovascularly *via* the common iliac artery. PO Resp. 29. Patent Owner notes that Petitioner relies solely upon Kainuma in support of this argument. *Id.* (citing Pet. Pet., 24–25, 27, 55, 57, 87). However, Petitioner points out that Kainuma teaches use of a 22F arterial sheath, which is the same size of sheath employed for transfemoral delivery and does not teach or suggest the

use of a larger-diameter sheath. *Id.* at 30 (citing Ex. 2052, 34; Ex. 1043, 275). Patent Owner also notes that delivery *via* the common iliac is significantly more invasive than transfemoral delivery, and that both Drs. Buller and Brecker agree that surgical access of the common iliac carries risks of vascular injury, infection, vessel rupture, bleeding, renal failure and more. *Id.* at 32 (citing Ex. 2051 ¶¶ 69, 105; Ex. 2052 61–62, 27–28, 44, 57, 59, 62, 69).

c. Petitioner's Reply

Petitioner's arguments in reply are largely set forth in Section II.D.5.b above. With specific reference to Walther, Petitioner argues that, even if bodily incorporation of Walther's outer cloth would not be suitable for endovascular delivery, persons of ordinary skill in the art would have had access to a range of suitable cloths and could have selected an appropriately dimensioned cloth for endovascular delivery. Pet. Reply 21 (citing Pet. 25; Ex. 1003 ¶¶ 111, 289; Ex. 1011 ¶¶ 55, 145; Ex. 1008, col. 13, ll. 49–53; Ex. 1007, 1121; Ex. 1017, 1–2; Ex. 1074, col. 4, ll. 54–58, col. 10, ll. 45–49; Ex. 1102 ¶¶ 33–34).

With respect to Kainuma, Petitioner replies that those of skill in the art would have been aware that the common iliac artery has a generally larger diameter than the common femoral artery and could therefore accommodate a device with a larger crimped diameter. Pet. Reply 23 (citing Ex. 1078, 602–603; Ex. 1082, 51).

d. Analysis

We are not persuaded that Petitioner has established, by a preponderance of the evidence, that the combination of the prosthetic heart valves of Cribier, Spenser, or Levi with the outer cloth of Walther would render obvious to a person of ordinary skill in the art a device capable of being delivered endovascularly.

Walther teaches an experimental valve-in-valve implantation, specifically, "the use of an Edwards SAPIEN™ trans-catheter heart valve (THV) cloth valve, which is identical to the SAPIEN model, but has an added outer cloth for implantation into a degenerative bovine pericardium, Carpentier-Edwards Perimount (CEP) bioprosthetic valve." Ex. 1007, 1120. This study is a non-surgical, bench-top experiment, requiring no endovascular, or any other surgical, approach or techniques. *See id.* at 1121 ("Bench-top testing specific to the valve-in-valve application[25] was carried out on SAPIEN™ cloth valves"). The cloth-covered valve used in Walther was delivered via a 33F diameter Ascendra sheath. *Id.* Walther is silent with respect to endovascular, or indeed any, means of delivery, stating only that "based on previous testing and valve-in-valve cases being performed with the Edwards SAPIEN implanted into prosthetic Carpentier-Edwards Tissue Valves with appropriate model numbers and sizes, the procedure [i.e.,

[25] A "valve-in-valve" implantation is thus the implantation of a prosthetic heart valve within a previously-implanted (and presumably malfunctioning) prosthetic heart valve.

valve-in-valve implantation] is feasible." *Id.* at 1125 (internal citations omitted).

The only evidence of record of a SAPIEN-Walther-type[26] prosthetic heart valve being used surgically is Cheung, which teaches valve-in-valve implantation of a SAPIEN-Walther-type prosthetic valve with an outer cloth *via* a transapical approach. *See* Ex. 1017. Like Walther, Cheung teaches a valve-in-valve implantation, but unlike Walther, this implantation was performed surgically in a human patient, rather than on a bench top. *Id.*, Abstr. The transapical approach to valve-in-valve implantation employed by Cheung is made by making an incision in the ventricular apex (i.e., inferior tip) of the heart and inserting a cannula through the apical muscle of the heart and anterogradely through the left ventricle to the aortic valve. *See id.* at e18–19, Fig. 1. Because such an approach is therefore not made by passing the cannula bearing the prosthetic heart valve through the lumen of any blood vessel, it cannot reasonably be considered to be "endovascular."

---

[26] Given the great similarity of the valves disclosed by Cribier, Spenser, and Levi, we use the term "SAPIEN-Walther-type" valve to collectively refer to the prosthetic heart valves of each reference combined with the outer cloth disclosed by Walther.

The SAPIEN-Walther-type prosthetic valve employed by Cheung is depicted in Figure 2 of Cheung, which is reproduced below:

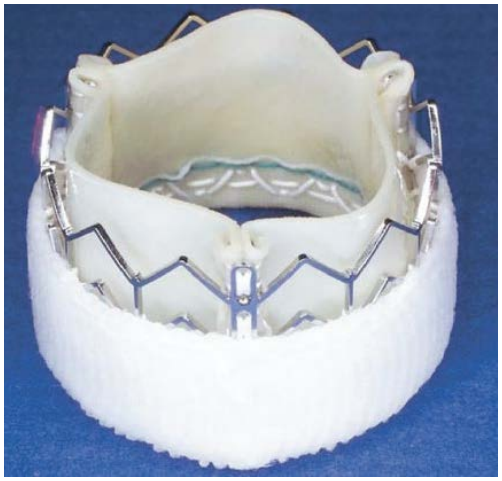

Figure 2 of Cheung depicts the fabric cuff surrounded Cribier-Edwards transcatheter valve employed in Cheung

As in Walther, Cheung teaches that transapical delivery of this SAPIEN-Walther-type device requires a 33F sheath. Ex. 1017, e19 ("A 26-mm Cribier-Edwards 9000MIS (Edwards Lifesciences) transcatheter valve—constructed of equine pericardial leaflets within a stainless steel stent, surrounded by a fabric cuff (Fig 2)—was delivered through a 33F sheath"). Cheung has no teaching or suggestion that any other surgical approach to implantation (e.g., an endovascular approach) would be feasible with a prosthetic valve and sheath of this large diameter. The diameter of a 33F sheath considerably exceeds the 24F maximum diameter that would be the maximum feasible diameter for transfemoral deliver, as both parties' experts agree. *See, e.g.*, Ex. 1003 ¶; Ex. 2051 ¶ 49.

Nor is it likely that a sheath of such a diameter would be capable of being delivered endovascularly *via* the common iliac artery. Kainuma, the

sole evidence of record adduced to demonstrate the feasibility of an endovascular delivery of an (uncovered) SAPIEN valve *via* the common iliac, employed only a 22F sheath. *See* Ex. 1043, 274 ("[A] left common iliac artery was exposed through a retroperitoneal approach. After administering 5000 IU heparin, a 22F arterial sheath was inserted by open puncture"). Kainuma neither teaches nor suggests that a 33F sheath would be practical or even feasible for such an approach.

Dr. Brecker also notes other possible endovascular delivery (e.g., carotid or direct-aortic approaches), but Petitioner adduces no evidence, or makes any argument, that such an approach could feasibly accommodate the 33F sheath required for delivery of a SAPIEN-Walther-type valve.

Importantly, neither Walther nor Cheung teach or suggest any other use for the SAPIEN-Walther-type valve than for valve-in-valve implantation performed *via* a transapical approach. Indeed, Walther expressly states that: "the addition of an outer cloth to the SAPIEN™ cloth valve is designed to reduce paravalvular leak by creating a seal between the two valves and improve resistance to migration with better 'fit' within surgical Perimount valves." Ex. 1007, 1120. However, Petitioner has failed to adduce sufficient evidence to persuade us that a person of ordinary skill in the art would have understood that a SAPIEN-Walther-type valve, which the art teaches is intended for transapical valve-in-valve implantation, could be used for endovascular delivery.

Nor, given this express purpose, has Petitioner demonstrated that a skilled artisan would have been motivated to attempt such a procedure with

a reasonable expectation of success based on Walther. We find this to be particularly so in view of the large disparity in diameter between the sheath required to deliver the SAPIEN-Walther-type valve (33F) and the maximum diameter for transfemoral delivery (24F), as agreed by both parties' experts. *See* Ex. 1007, 1121; Ex. 1017, e19; Ex. 1043, 274; Ex. 1003 ¶; Ex. 2051 ¶ 49.

We distinguish this conclusion from our findings and conclusion with respect to Ground IV, which challenges, *inter alia*, independent claims 1 and 11 as being obvious over the combination of Spenser and Spenser II. *See* Section II.D.6.b. above. As we pointed out with respect to Ground IV, "Spenser and Spenser II both expressly teach that their TAVRs are meant to be capable of being delivered endovascularly, as recited in the claims." *Id.* (citing, e.g., Ex. 1010, col. 2, ll. 6–15; Ex. 1011 ¶¶ 11–13, 90). Neither Walther nor the prior art reference Cheung teaches or suggests that the combined SAPIEN-Walther-type valve was intended for any other purpose than valve-in-valve implantation made *via* a (non-endovascular) transapical surgical approach. *See* Ex. 1007, 1120; Ex. 1017, e18–19. Petitioner has also failed to demonstrate why a person of ordinary skill in the art would have been motivated to attempt to employ the SAPIEN-Walther-type valve in a manner (endovascular delivery) different from its intended one (transapical valve-in-valve implantation).

Nor has Petitioner sufficiently demonstrated that a skilled artisan would have had a reasonable expectation of success in endovascular delivery of the SAPIEN-Walther-type valve, particularly given the disparity between

the 33F sheath diameter required for delivery of the SAPIEN-Walther-type valve and the undisputed diameter of the femoral artery, which the parties' experts agree, permits a maximum sheath diameter of 22F. Absent any such evidence, Petitioner has failed to meet its burden of proof to show that it would have been obvious, or even feasible, to a person of skill in the art to provide an endovascular delivery of the combined SAPIEN-Walther-type prosthetic heart valve of Grounds I, III, and VII with a reasonable expectation of success.

Because we conclude that Petitioner has failed to demonstrate, by a preponderance of the evidence, that independent claims 1 and 11 would have been obvious over the prior art references cited in Grounds I, III, and VII, we conclude that Petitioner has failed to demonstrate that dependent claims 9 and 19, which incorporate the limitations of claims 1 and 11, respectively would have been unpatentable as obvious over those references. *See Monsanto*, 503 F.3d at 1357. Because Grounds I, III, and VIII are the only ones upon which Petitioner challenges claims 9 and 19, we conclude that Petitioner has failed to demonstrate, by a preponderance of the evidence, that claims 9 and 19 are unpatentable.

F. Grounds II, V, VI, and VIII

Because we find that Petitioner has demonstrated, by a preponderance of the evidence, that challenged claims 1–8, 10–18, and 20 are unpatentable over Spenser and Spenser II upon Ground IV, we need not address whether these challenged claims are unpatentable upon remaining Grounds II, V, VI,

and VIII, which also challenge some or all of those claims. *See SAS Inst. Inc. v. Iancu*, 138 S. Ct. 1348, 1359 (2018) (holding that a petitioner "is entitled to a final written decision addressing all of the claims it has challenged"); *Boston Sci. Scimed, Inc. v. Cook Grp. Inc.*, 809 F. App'x 984, 990 (Fed. Cir. 2020) (nonprecedential) (recognizing that the "Board need not address issues that are not necessary to the resolution of the proceeding" and therefore agreeing that the Board has "discretion to decline to decide additional instituted grounds once the petitioner has prevailed on all its challenged claims").

III. CONCLUSION

For the reasons we have set forth above, and after having analyzed the entirety of the record and assigning appropriate weight to the evidence cited by Petitioner and Patent Owner, we determine that Petitioner has established, by a preponderance of the evidence, that claims 1–8, 10–18, and 20 of the '538 patent are unpatentable. However, we also determine that Petitioner has failed to meet its burden of establishing, by the same standard, that claims 9 and 19 are unpatentable.

IV. ORDER

Accordingly, it is

ORDERED that Petitioner has shown by a preponderance of the evidence that claims 1–8, 10–18, and 20 of the '538 patent are unpatentable;

FURTHER ORDERED that Petitioner has failed to show by a preponderance of the evidence that claims 9 and 19 of the '538 patent are unpatentable;

FURTHER ORDERED that, because this is a Final Written Decision, parties to the proceeding seeking judicial review of the decision must comply with the notice and service requirements of 37 C.F.R. § 90.2.[27]

---

[27] Should Patent Owner wish to pursue amendment of the challenged claims in a reissue or reexamination proceeding subsequent to the issuance of this decision, we draw Patent Owner's attention to the April 2019 *Notice Regarding Options for Amendments by Patent Owner Through Reissue or Reexamination During a Pending AIA Trial Proceeding*. *See* 84 Fed. Reg. 16,654 (Apr. 22, 2019). If Patent Owner chooses to file a reissue application or a request for reexamination of the challenged patent, we remind Patent Owner of its continuing obligation to notify the Board of any such related matters in updated mandatory notices. *See* 37 C.F.R. § 42.8(a)(3), (b)(2).

Claims	35 U.S.C. §	Reference(s) /Basis	Claims Shown Unpatentable	Claims Not Shown Unpatentable
1, 8–11, 18–20	103	Cribier, Walther		1, 11, 9, 19
2, 3, 5–7, 12, 13, 15–17	103[28]	Cribier, Walther, Cribier '321		
1–20	103	Spenser, Walther		1, 11, 9, 19
1–8, 10–18, 20	103	Spenser, Spenser II	1–8, 10–18, 20	
1–8, 10–18, 20	102(e)[30]	Levi		
1–8, 10–18, 20	103[31]	Levi,		
7, 12	103	Levi, Walther		1, 11, 9, 19
1–8, 10–18, 20	103[32]	Levi, Spenser II		
Overall Outcome			1–8, 10–18, 20	9, 19

[28–32] For each of these Grounds, a decision was not reached because we determined the Petitioner's arguments with respect to the ground based on Spenser and Spenser II (Ground III) was dispositive of this case. *See Boston Sci.*, 809 F. App'x at 990.

PETITIONER:

Craig Summers
Joshua Stowell
Brian Barnes
KNOBBE, MARTENS, OLSON & BEAR, LLP
2css@knobbe.com
2jys@knobbe.com
brian.barnes@knobbe.com

PATENT OWNER:

Kenneth Weatherwax
Vinson Lin
Nathan Lowenstein
Edward Hsieh
LOWENSTEIN & WEATHERWAX LLP
weatherwax@lowensteinweatherwax.com
lin@lowensteinweatherwax.com
lowenstein@lowensteinweatherwax.com
hsieh@lowensteinweatherwax.com

From: PTACTS_System@uspto.gov <PTACTS_System@uspto.gov>
Sent: Monday, April 24, 2023 7:12 AM
To: weatherwax@lowensteinweatherwax.com; 2css <2css@knobbe.com>
Cc: 2Jys <2Jys@knobbe.com>; lowenstein@lowensteinweatherwax.com; hsieh@lowensteinweatherwax.com; Brian Barnes <Brian.Barnes@knobbe.com>; lin@lowensteinweatherwax.com
Subject: IPR2022-00193: Final Written Decision - Edwards Lifesciences Corp. v. Aortic Innovations LLC

UNITED STATES PATENT AND TRADEMARK OFFICE
PATENT TRIAL AND APPEAL BOARD

Final Written Decision Notice

AIA Review No.: IPR2022-00193
Petitioner: Edwards Lifesciences Corp.
Patent Owner: Aortic Innovations LLC of Hillsboro Beach, FL
Patent No.: 10881538
Decision Date: 04/24/2023
Submitted By: PTAB, Trials@uspto.gov

A Final Written Decision has been entered in the above case.

Questions regarding this receipt should be directed to the Patent Trial and Appeal Board at 571-272-7822 or e-mail to Trials@uspto.gov.

This e-mail is computer-generated. Do not reply to this e-mail because the e-mail box is not monitored.