UNITED STATES PATENT AND TRADEMARK OFFICE

BEFORE THE PATENT TRIAL AND APPEAL BOARD

EDWARDS LIFESCIENCES CORPORATION AND
EDWARDS LIFESCIENCES LLC,
Petitioners,

v.

AORTIC INNOVATIONS LLC,
Patent Owner.

Case IPR2021-01584
Patent 10,857,011

PATENT OWNER PRELIMINARY RESPONSE

Edwards v. Aortic Innovations
U.S. Patent 11,497,634
Edwards Ex. 1124

TABLE OF CONTENTS

I. INTRODUCTION 1

II. PETITIONER FAILS TO DEMONSTRATE THAT ANY OF ITS PROPOSED COMBINATIONS DISCLOSE OR RENDER OBVIOUS A VALVE WITH A "SEALING MATERIAL" THAT IS DELIVERED "ENDOVASCULARLY" (GROUNDS 1-4, 7-8, 11-14, ALL CLAIMS) 3

A. Endovascular Delivery Requires A Device With A Narrow (*e.g.*, 8 mm) Delivery Profile 8

B. Adding The Outer Cloth Of Walther Or Spenser II To Spenser, Cribier, Or Levi Would Make The Device Too Big For Endovascular Delivery. 9

1. Adding Walther To Spenser, Cribier '321, Or Levi Would Make The Device Too Big For Endovascular Delivery. (Grounds 1, 3, 7, 11, 13, All Claims) 10

2. Adding Spenser II To Spenser, Cribier '321, Or Levi Would Make The Device Too Big For Endovascular Delivery. (Grounds 2, 4, 8, 12, 14, All Claims) 18

C. Petitioner's Arguments Fail To Demonstrate Its Proposed Combinations Could Be "Delivered Endovascularly." 22

D. Petitioner Further Fails To Explain Why A POSITA Would Be Motivated To Add Walther's Or Spenser II's Outer Cloth To Spenser, Cribier '321 Or Levi, When Doing So Would Prevent Transfemoral Delivery. 35

1. Spenser's, Cribier '321's and Levi's Devices Were Designed To Have A Narrow Profile Suitable For Transfemoral Delivery 36

2. Petitioner's Combinations Fail Because They Would Render Levi, Cribier '321 And Spenser Inoperable For Their Intended Purpose. 38

3. Petitioner's Proffered Motivations Fail. 39

III. THE PETITION FAILS TO DEMONSTRATE THAT LEVI DISCLOSES OR RENDERS OBVIOUS "A 'SEALING MATERIAL' THAT INCLUDES 'RADIALLY EXTENDING FIBERS.'" (GROUNDS 5, 6, 9, 10) 42

A. "Radially Extending Fibers" Are A Significant Aspect Of The Inventive Structure And Are Manifestly Not Shown In Levi. 43

B. Petitioner's Arguments That Levi Discloses "Radially Extending Fibers" Do Not Remotely Surpass The High Standard Of Inherency. 46

1. Petitioner Fails To Prove That Levi's Outer Skirt's "Bulge" Discloses "Radially Extending Fibers." 47

2. Petitioner Reliance Upon A Textile Reference That Does Not Mention PET, Much Less "Woven PET" Does Not Demonstrate That Levi's "Woven PET" Outer Skirt Is "Hairy." 48

3. The Outer Skirt Of Petitioner's Commercial Product, SAPIEN 3, Is Made By "Flat Woven" PET With A Smooth Surface. 55

IV. PETITIONER FAILS TO PROVE THAT CRIBIER, SPENSER, OR LEVI TEACH "AN INNER FRAME … WHEREIN THE INNER FRAME IS A GRAFT COVERING" (ALL GROUNDS, ALL CLAIMS) 57

V. INSTITUTION SHOULD BE DENIED UNDER § 325(D) BECAUSE PETITIONER'S REFERENCES ARE EITHER THE SAME AS OR CUMULATIVE OF REFERENCES CONSIDERED DURING PROSECUTION (ALL GROUNDS, ALL CLAIMS). 60

A. Levi And Spenser II Were Considered By The Examiners (Grounds 5-6 And 8) And Petitioner Fails To Prove The Examiners "Materially Erred." 61

B. Cribier '321, Walther, And Spenser Are Substantially Similar To Levi And Spenser II (Grounds 1-4, 7, And 9-14). 68

VI. PETITIONER FAILS TO DEMONSTRATE THAT WALTHER WAS PUBLICLY ACCESSIBLE (GROUNDS 1, 3, 7, 11, 13 ALL CLAIMS). 79

VII. DISCLAIMED CLAIMS 1-6 AND 8-11 SHOULD BE TREATED AS THOUGH THEY NEVER EXISTED AND MAY NOT BE A BASIS FOR INSTITUTION UNDER 37 C.F.R. § 42.107(E). 82

VIII. CONCLUSION 83

TABLE OF AUTHORITIES

Page(s)

COURT DECISIONS

Blue Calypso, LLC v. Groupon, Inc.,
815 F.3d 1331 (Fed. Cir. 2016) 81

Bongiovanni v. Compass Bank,
2013 U.S. Dist. LEXIS 101944 (E.D. Tex. Jun. 26, 2013) 59

Calvary Temple Assembly of God v. City of Marinette,
2008 U.S. Dist. LEXIS 55500 (E.D. Wis. Jul. 18, 2008).....59

DePuy Spine, Inc. v. Medtronic Sofamor Danek, Inc.,
567 F.3d 1314 (Fed. Cir. 2009) 39

Harmonic Inc. v. Avid Tech., Inc.,
815 F.3d 1356 (Fed. Cir. 2016) 27

Hillman v. AFGE,
2020 U.S. Dist. LEXIS 114498 (D.C. Dist. Ct. Jun. 29, 2020).....59

In re Gordon,
733 F.2d 900 (Fed. Cir. 1984) 39

In re Magnum Oil Tools Int'l, Ltd.,
829 F.3d 1364 (Fed. Cir. 2016) 58

Medtronic, Inc. v. Barry,
891 F.3d 1368 (Fed. Cir. 2018) 79

Mitchell v. Crescent River Port Pilots Ass'n,
265 Fed. App'x 363 (5th Cir. 2008) 59

PAR Pharm. v. TWi Pharms., Inc.,
773 F.3d 1186 (Fed. Cir. 2014) 46

SRI Int'l, Inc. v. Internet Sec. Sys., Inc.,
511 F.3d 1186 (Fed. Cir. 2008) 80

STATUTES

35 U.S.C. § 253(a) 82

35 U.S.C. § 312(a)(3).....27

35 U.S.C. § 316(e) 58

35 U.S.C. § 325(d) 2, 60, 68, 78

AGENCY DECISIONS

Advanced Bionics, LLC v. MED-EL Elektromedizinische Geräte GmbH,
IPR2019-01469, Paper 6 (PTAB Feb. 13, 2020) (precedential) 60

Apple Inc., v. Uniloc Luxembourg S.A.,
IPR2017-01993, Paper 10 (PTAB Mar. 8, 2018).....27

Baker Hughes v. LiquidPower Specialty Prods., Inc.,
IPR2016-01903, Paper 74 (PTAB Mar. 8, 2019).....83

Becton, Dickinson & Co. v. B. Braun Melsungen AG,
IPR2017-01586, Paper 8 (PTAB Dec. 15, 2017) (precedential)..... 60, 78

Comcast Cable Commc'ns LLC v. Promptu Sys. Corp.,
IPR2018-00342, Paper 13 (PTAB July 19, 2018).....67

Costco Wholesale Corp. v. Robert Bosch LLC,
IPR2016-00042, Paper 28 (PTAB July 7, 2016).....29

Google LLC v. IPA Techs. Inc.,
IPR2018-00475, Paper 7 (PTAB July 20, 2018).....81

Hulu, LLC v. Sound View Innovations, LLC,
IPR2018-01039, Paper 29 (PTAB Dec. 20, 2019) (precedential).....79

Intel Corp. v. VLSI Technology LLC,
IPR2018-01040, Paper 36 (PTAB Feb. 12, 2020).....83

Tyco Fire Prods. LP v. Victaulic Co.,
IPR2016-00278, Paper 13 (PTAB Sept. 7, 2016).....29

Victoria's Secret Stores LLC v. Andra Group, LP,
IPR2020-00853, Paper 12 (PTAB Oct. 22, 2020)..... 81, 82

RULES, RULEMAKING, AND OTHER AGENCY AUTHORITIES

37 C.F.R. § 1.321(a).....82

37 C.F.R. § 42.107(e).....1, 83

EXHIBIT LIST	
2001	RESERVED
2002	Declaration of Stephen J.D. Brecker [Brecker-Decl.]
2003	John D. Carroll et al., *STS-ACC TVT Registry of Transcatheter Aortic Valve Replacement*, Journal of the American College of Cardiology, Nov. 24, 2020, Vol. 76, No. 21, pp. 2492-2516 [TVT]
2004	Benjamin Clayton et al., *Transcatheter aortic valve insertion (TAVI): a review*, The British Journal of Radiology, Jan. 2014, Vol. 87, No. 1033, pp. 1-12 [Clayton]
2005	Martyn Thomas et al., *One-Year Outcomes of Cohort 1 in the Edwards SAPIEN Aortic Bioprosthesis European Outcome (SOURCE) Registry*, Circulation, July 26, 2011, Vol. 124, No. 4, pp. 425-433 [SOURCE-Registry]
2006	Craig R. Smith et al., *Transcatheter versus Surgical Aortic-Valve Replacement in High-Risk Patients*, The New England Journal of Medicine, June 9, 2011, Vol. 364, No. 23, pp. 2187-2198 [PARTNER]
2007	David H. Adams et al., Transcatheter Aortic-Valve Replacement with a Self-Expanding Prosthesis, The New England Journal of Medicine, May 8, 2014, Vol. 370, No. 19, pp. 1790-1798 [Corevalve]
2008	Declaration of Nigel Buller, *Edwards Lifesciences Corp. et al. v. Aortic Innovations, LLC*, IPR2022-00193 (filed Nov. 12, 2021) [0193-Buller-Decl.]
2009	Hyde M. Russell et al., *Open Atrial Transcatheter Mitral Valve Replacement in Patients With Mitral Annular Calcification*, Journal of the American College of Cardiology, Sept. 25, 2018, Vol. 72, No. 13, pp. 1437-1448 [Russell]
2010	MITRAL Trial Valve in MAC Trans-Atrial Approach [Russell-Video]
2011	Disclaimer in Patent Under 37 CFR 1.321(a), U.S. Patent 10,857,011, Jan. 8, 2022 [Disclaimer]
2012	Alan B. Lumsden, MD, Retroperitoneal Exposure: Iliac Artery and Conduit, at https://www.youtube.com/watch?v=FYtL4cDtLR4 (uploaded online Feb. 21, 2018) [Retroperitoneal-Video]

2013	W. Anthony Lee et al., *Morbidity with retroperitoneal procedures during endovascular abdominal aortic aneurysm repair*, Journal of Vascular Surgery, Sept. 1, 2003, Vol. 38, No. 3, pp. 459-464 [Lee]
2014	SAPIEN XT valve | Edwards Lifesciences, Edwards Ascendra + delivery system, at https://www.edwards.com/gb/devices/heart-valves/sapien-xt-valve (last visited Dec. 11, 2021) [Ascendra]
2015	ASCENDRA+ INTRODUCER SHEATH SET, FDA report, GUDID/00690103193763, Device Publish Date Aug. 30, 2014 [Ascendra-FDA]
2016	Tanyanan Tanawuttiwat et al., *New-Onset Atrial Fibrillation After Aortic Valve Replacement*, Journal of the American College of Cardiology, Apr. 2014, Vol. 63, No. 15, pp. 1510-1519 [Tanawuttiwat]
2017	Rajkumar Doshi et al., *In-hospital outcomes comparison of transfemoral vs transapical transcatheter aortic valve replacement in propensity-matched cohorts with severe aortic stenosis*, Clinical Cardiology, Mar. 24, 2018, Vol. 41, No. 3, pp. 326-332 [Doshi]
2018	Invalidity Search Report, Intentus Group, Report Date Mar. 30, 2020 [Intentus]
2019	Bassam Al Meslmani et al., *Development of thrombus-resistant and cell compatible crimped polyethylene terephthalate cardiovascular grafts using surface co-immobilized heparin and collagen*, Materials Science and Engineering C, Oct. 1, 2014, Vol. 43, pp. 538-546 [Meslmani]
2020	Alex Rodrigues et al., *Mechanical behavior of PET fibers and textiles for Stent-Grafts using video extensometry and image analysis*, Science and Technology of Materials, Dec. 2018, Vol. 30, pp. 23-33 [Rodrigues]
2021	Sander De Bock, *A (Bio)Mechanical Analysis of Stent Grafts for the Treatment of Abdominal Aortic Aneurysms*, Ph.D. Dissertation, Academic Year 2013-2014, Ghent University [De Bock]
2022	Edwards SAPIEN 3 Transcatheter Heart Valve System: Edwards SAPIEN 3 Transcatheter Heart Valve, Edwards Commander Delivery System, Instructions for Use – Pulmonic (PMA number: 200015) [FDA-P200015]
2023	Edwards SAPIEN 3 Transcatheter Heart Valve System: SAPIEN 3 Transcatheter Heart Valve, Edwards Commander Delivery System, Instructions for Use (PMA number: P140031; Supplement number: S085)

	[FDA-P140031S085d]
2024	Edwards SAPIEN 3 and SAPIEN 3 Ultra Transcatheter Heart Valve System: Edwards SAPIEN 3 and Edwards SAPIEN 3 Ultra Transcatheter Heart Valve, Edwards Commander Delivery System, Instructions for Use (PMA number: P140031; Supplement number: S112) [FDA-P140031/S112]
2025	Edwards SAPIEN 3 and SAPIEN 3 Ultra Transcatheter Heart Valve System: Edwards SAPIEN 3 and Edwards SAPIEN 3 Ultra Transcatheter Heart Valve, Edwards Commander Delivery System, Instructions for Use (PMA number: P140031; Supplement number: S125) [FDA-P140031-S125c]
2026	Martyn Thomas, *SAPIEN 3 Ultra Valve First-In-Human Experience*, Disclosure to employees and stock holders [Thomas]
2027	Edwards SAPIEN 3: Transcatheter Heart Valve with the Edwards Commander Delivery System, Instructions for Use (PMA number: P140031) [FDA-P140031C]
2028	Edwards SAPIEN: Transcatheter Heart Valve with the RetroFlex 3 Delivery System, Instructions for Use (PMA number: P100041) [FDA-P100041C]
2029	Edwards SAPIEN: Transcatheter Heart Valve with the RetroFlex 3 Delivery System, Instructions for Use (PMA number: P110021) [FDA-P110021C]
2030	Excerpts from the prosecution history of U.S. 10,792,172 [’172 Prosecution-History]
2031	Edwards Petition for Inter Partes Review filed in IPR2021-01527 [IPR2021-01527 Petition]
2032	Declaration of Nigel P. Buller, M.D. filed in IPR2021-01527 [IPR2021-01527 Buller-Decl.]

I. INTRODUCTION

The Petition should be denied as it fails to demonstrate a reasonable likelihood of prevailing as to at least one of the remaining[1] challenged claims (*i.e.*, claims 7 and 12). Indeed, the Petition fails for multiple reasons.

First, each of the remaining challenged claims requires a "valve assembly" that "is delivered endovascularly" which includes "a sealing material positioned externally to the outer frame" of the valve. Petitioner takes a kitchen sink approach, asserting fourteen separate grounds to attempt to show that these limitations are met. In Grounds 1-4, 7-8, and 11-14, Petitioner adds an outer cloth from Walther or Spenser II (allegedly the "sealing material") to Spenser's, Cribier '321's or Levi's outer frame. Petitioner fails to show, however, that any of these combinations could be delivered "endovascularly." Rather, the addition of the outer cloth would make the resulting combinations too large to be capable of endovascular delivery or, at the very least, Petitioner fails to prove otherwise. *See* Section II.

---

[1] Challenged claims 1-6 and 8-11 have been disclaimed and, thus, cannot be a basis for institution. *See* Section VII; 37 C.F.R. § 42.107(e).

Second, in Grounds 5, 6, 9 & 10 Petitioner relies on Levi alone, pointing to Levi's woven PET outer skirt for the "sealing material," but fails to show that Levi's outer skirt discloses or renders obvious "radially extending fibers that extend outwardly of the outer frame." *See* Section III.

Third, the claims require "an inner frame … wherein ***the inner frame is a ... graft covering***"[2] or "includes a ... graft covering."[3] Petitioner, thus, must prove that this limitation is disclosed and/or obvious over its combinations but instead insists "that ***a graft covering cannot be an 'inner frame.'***" Pet., 31, n. 5. Thus, the party with the burden insists that it "cannot" prove its case. *See* Section IV.

Fourth, institution should be denied under § 325(d) as Petitioner's numerous grounds are based on the same or substantially similar art and arguments overcome in prosecution. Petitioner relies on Levi alone, or in combination with Spenser II

---

[2] All emphasis in this brief, except the emphasis in quotations from the Brecker Declaration, is added unless otherwise noted.

[3] While Claim 12 recites that the "inner frame includes a … graft covering," as explained below, Petitioner contends that this limitation is met by an inner frame that is a graft covering and relies exclusively on its claim 1 arguments for this limitation. *See* Section IV; Pet., 75-76.

in Grounds 5-6 and 8, both of which were carefully considered by the Examiner. *See* Section V.A. Petitioner's remaining grounds (1-4, 7 and 9-14) rely on various combinations of Levi and Spenser II along with Cribier '321, Walther, and Spenser. Cribier '321, Walther, and Spenser, however, are all substantially similar to Levi and Spenser II. *See* Section V.B.

Finally, Petitioner fails to demonstrate Walther is prior art. Petitioner simply asserts that Walther was "published on April 3, 2011" but provides no evidence that either reference was publicly available as of November 7, 2012. Consequently, the grounds reliant upon Walther (Grounds 1, 3, 7, 11, 13) should be rejected for this additional reason. *See* Section VI.

II. PETITIONER FAILS TO DEMONSTRATE THAT ANY OF ITS PROPOSED COMBINATIONS DISCLOSE OR RENDER OBVIOUS A VALVE WITH A "SEALING MATERIAL" THAT IS DELIVERED "ENDOVASCULARLY" (GROUNDS 1-4, 7-8, 11-14, ALL CLAIMS).

The claims each require a "valve assembly" that "is delivered ***endovascularly***." Ex. 1001 ['011] cl. 7; cl. 12 ("***endovascularly*** deployed heart valve assembly," "wherein the valve assembly is balloon expandable during endovascular deployment").[4] The claims further require that this valve includes an

[4] Petitioner relies on its claim 7 arguments for the "endovascular" limitations of claim 12. Pet., 75, 79, 107-108, 111.

"outer frame" with "a sealing material positioned externally to the outer frame." *Id*. Notably, the absence of the "sealing material" limitation in the prior art of record ***was*** a basis for allowance of the '011's parent patent:

> The following is an examiner's statement of reasons for allowance: ***the prior art of record does not disclose or render obvious <u>the sealing material</u> positioned externally to the outer frame***...

Ex. 2030 ['172 Prosecution-History] 173. The Examiners reached this conclusion even though they were well aware of Spenser II's Figure 22, relied upon by Petitioner, as Patent Owner included the image in its preceding remarks. *Id*., 277.

The Petition raises fourteen different grounds in its attempt to satisfy the "sealing material" limitation. In Grounds 1-4 and 7-8, 11-14, Petitioner proposes combining Walther's or Spenser II's Figure 22's outer cloth as the purported "sealing material" with the outer frame of the prosthetic heart valves in Spenser, Cribier '321 or Levi. Pet., 27-28, 38-46, 80-81, 92-94. The outer cloths of Walther and Spenser II are shown below:

Walther

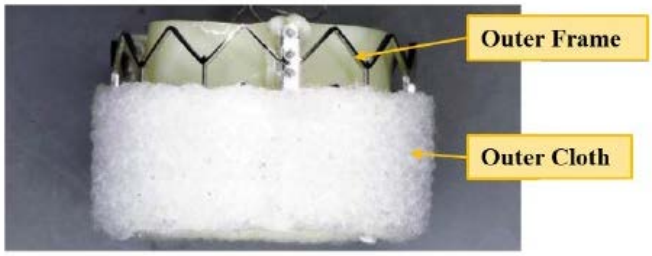

Spenser II

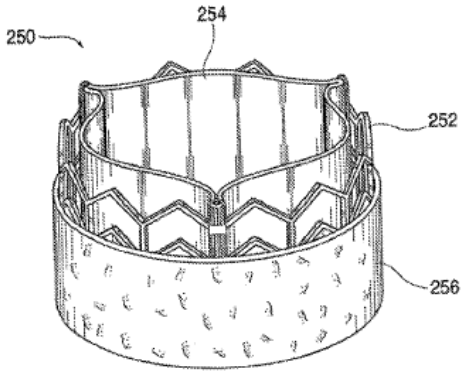

FIG. 22

Petitioner's various combinations of alleged "outer frames" and "sealing materials" are below:

Ground(s)	Alleged "Outer Frame"	Outer Cloth, Alleged "Sealing Material"
1	Spenser	Walther
2	Spenser	Spenser II
3	Cribier '321	Walther
4	Cribier '321	Spenser II
7, 11, 13	Levi	Walther
8, 12, 14	Levi	Spenser II

Each of Petitioner's proposed combinations, however, has an inescapable fatal flaw; adding the outer cloth of Walther or Spenser II to Spenser, Cribier '321 or Levi would make the resultant combination far too large to be "delivered endovascularly" as required. And this is not trivial. As Dr. Brecker explains:

> Endovascular deployment of a transcatheter valve, a technology that only received FDA approval in 2011, shortly before the '011

> provisional's November 7, 2012 filing date, allows a doctor to replace a failing aortic valve in a patient without open heart surgery. Ex. 2003 [TVT] 2-4. Particularly when the patient is older, with multiple comorbidities, avoiding open heart surgery, *i.e.* cutting open the breastbone of the patient with a large incision and requiring significant time in the intensive care unit thereafter, is an important advantage. Indeed, endovascular transcatheter replacement can allow discharge within a matter of a few days. However, this innovative and life-saving technique is only possible if the valve profile is small enough to pass through the peripheral arteries of the patient. If the valve is too large, it cannot pass through the arteries, thus restricting access to this life-saving technology to a transthoracic approach (transapical or direct aortic).

Ex. 2002 [Brecker-Decl.] ¶35.

Significantly, Petitioner recognizes that a small delivery profile is necessary for endovascular delivery. In connection with now-disclaimed claim 1, Petitioner emphasized that "claim 1 is ***not limited to endovascular delivery***" and therefore "POSITAs would not have expected the ***size of the valve to present any issues***" for any of the proposed combinations. Pet., 94; 42 (similar). The remaining claims, 7 and 12, however, ***do*** require endovascular delivery, and, per Petitioner, a POSITA ***would*** foresee "valve size as an issue for delivery." *Id.* Indeed, Petitioner fails to prove that any of its combinations could be delivered endovascularly, or that a POSITA would even be motivated to attempt to do so.

A POSITA would know that endovascular delivery requires the prosthetic heart valve to have a narrow delivery profile (*i.e.*, valve width when in the folded or crimped position). Petitioner admits that the maximum delivery profile for endovascular delivery through the femoral artery ("transfemoral delivery") is 8 mm (and even then only about 50% of femoral arteries would admit a device of 8mm), and does not show, or even clearly argue, that a valve larger than 8 mm could be delivered endovascularly through any route. Section II.A. A POSITA would know that adding Walther's or Spenser II's outer cloth to Spenser, Cribier '321 or Levi, however, would result in a device with a delivery profile well over the 8 mm limit, rendering the resulting combinations incapable of "endovascular delivery." Section II.B. Petitioner fails to explain how any of its proposed combinations could be delivered endovascularly in view of the increased delivery profile. Section II.C. Moreover, Petitioner's proffered motivations fail to account for the delivery profile issue or explain why a POSITA would be motivated to make these combinations in spite of it. Section II.D. Consequently, Petitioner fails to demonstrate that any of the proposed combinations in Grounds 1-4, 7-8, or 11-14 render the claims obvious.

A. Endovascular Delivery Requires A Device With A Narrow (*e.g.*, 8 mm) Delivery Profile.

To be delivered endovascularly, a valve's delivery profile must be narrow. Indeed, for endovascular delivery through the femoral artery, "the technique of first choice," Ex. 1009, 516, Petitioner, its expert, and the Spenser reference all acknowledge, the "maximal size of a catheter … should be ***no more than 8 mm in diameter***." Pet., 63 (quoting Spenser, 27:65-67) (emphasis in Petition); Ex. 1003 [Buller-Decl.] ¶167 (same). Indeed, "many authorities" considered an 8 mm (24 French) sized delivery catheter "to be the [upper] limit[] for a transfemoral approach." Ex. 2004 [Clayton] 4. Even with an 8 mm delivery catheter, "the device would only be suitable for transfemoral delivery in half of patients." Ex. 2002 [Brecker-Decl.] ¶37 (citing Ex. 2005 [SOURCE Registry] 1-3; Ex. 2006 [PARTNER] 1-4). Because of this, design intent focused on making every element of the transcatheter valve smaller (leaflet thickness and frame strut thickness reduced as much as possible) in order to make the procedure transfemoral and truly percutaneous for the vast majority of patients. *Id*. (citing Ex. 2007 [Corevalve] 1-5).

Petitioner does not assert, much less prove that a valve with a delivery profile larger than 8 mm could be delivered endovascularly through any pathway. Pet., 60-64, 101-104. While Petitioner cites the common iliac artery as an

"alternative to the femoral artery in cases where the femoral artery was too small or calcified for safe delivery," Petitioner does not provide any indication of the maximum allowable delivery profile for the iliac artery. Pet., 61. In fact, Kainuma, cited by Petitioner for this proposition, used the same 7.3 mm (22F) arterial sheath—*i.e.*, smaller than 8 mm—that has been used "[f]or transfemoral delivery." Ex. 1043 [Kainuma] 3; Ex. 1012 [Cribier] 348. According to Petitioner's expert, "the delivery of valves through the femoral and common iliac artery is [] ***generally the same***." Ex. 2008 [0193 Buller-Decl.] ¶109.

Accordingly, a POSITA would know that to be "delivered endovascularly," a valve must have a narrow delivery profile (*e.g.*, less than 8 mm).

B. Adding The Outer Cloth Of Walther Or Spenser II To Spenser, Cribier, Or Levi Would Make The Device Too Big For Endovascular Delivery.

A POSITA would know that adding Walther's or Spenser II's outer cloth to Spenser, Cribier '321, or Levi would significantly increase the delivery profile of the resulting combinations, pushing them far past an 8 mm delivery profile and, thus, rendering them incapable of being delivered endovascularly. At a minimum, Petitioner fails to carry it burden of proving otherwise.

1. Adding Walther To Spenser, Cribier '321, Or Levi Would Make The Device Too Big For Endovascular Delivery. (Grounds 1, 3, 7, 11, 13, All Claims)

In Grounds 1, 3, 7, 11, and 13, Petitioner relies upon Walther's "cloth positioned externally to the outer frame." Pet., 39 (citing Ex. 1007 [Walther] 2). Walther's cloth, annotated by Petitioner, is below:

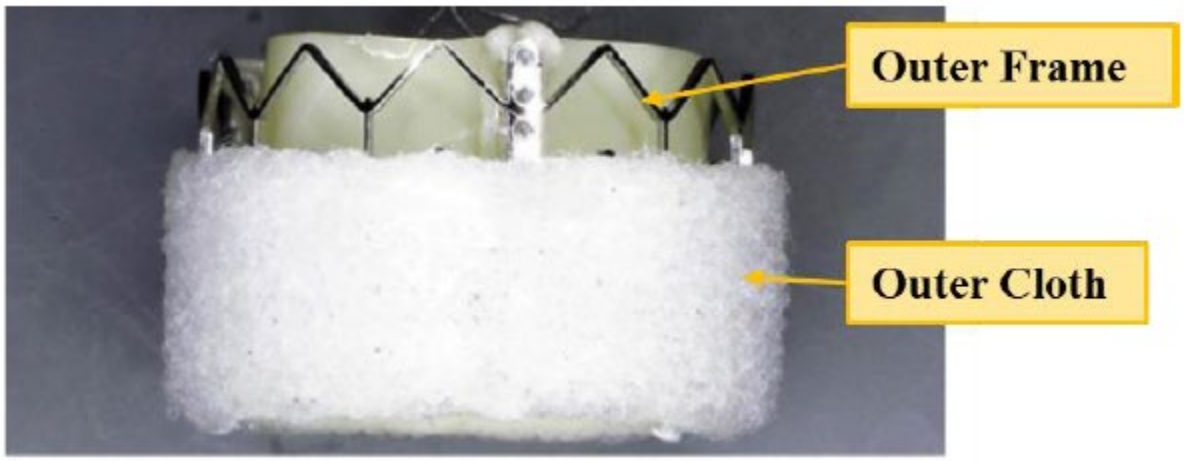

Pet., 39; *see also id*., 15, 26, 40, 52.

A POSITA would understand that Walther's thick outer cloth was not designed to be used on an endovascularly delivered device. Indeed, Walther uses an 11 mm (33 French) delivery catheter for its cloth valve, 3 mm (9 French sizes) over the 8 mm maximum for endovascular delivery through the femoral artery. Ex. 1007 [Walther] 2 ("The SAPIEN valves were deployed … via the 33F Ascendra system"), 6 (Table 4) ("Cloth valve (33F delivery)"). Additionally, Walther does not teach that its "cloth valve" can be crimped tightly enough for endovascular delivery. To the contrary, Walther provides that its system is suitable

"for the [surgical] trans-apical approach, ***where tight crimping is not an issue***." *Id*., 7. As Walther's cloth is not suitable for "tight crimping," it is not suitable for endovascular delivery. Ex. 2002 [Brecker-Decl.] ¶42. In fact, Petitioner even concedes that Walther could not be delivered endovascularly through "smaller blood vessels" without further, unspecified, modifications. Pet., 62.

Moreover, if Walther's outer cloth were added to a valve assembly (in the expanded state) and that valve assembly were then crimped, the cloth would bunch, adding significantly to the diameter of the crimped delivery profile. Ex. 2002 [Brecker-Decl.] ¶43. Such bunching of a soft material can be seen, for instance, in Petitioner's Spenser reference via the folds visible in element 447:

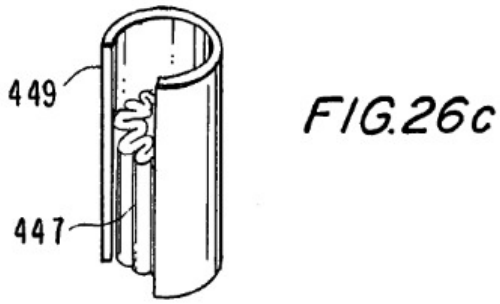

Ex. 1010 [Spenser] Fig. 26c.

As Dr. Brecker explains, such bunching is well-illustrated by the Russell reference:

> Bunching is clearly shown in Russell, a reference dated 6 years after the alleged time of invention. Ex. 2009 [Russell]. In Russell, similar

to Walther, we see an outer cloth that is attached to a valve assembly as shown below.

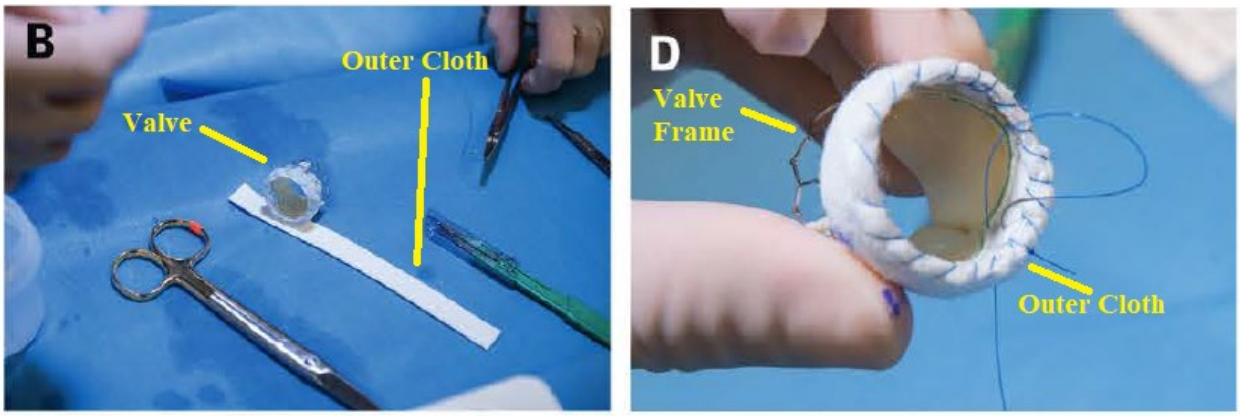

Id., 5 (Fig. 2) (yellow annotations added). In fact, the cloth valves in Russell and Walther look very similar to one another.

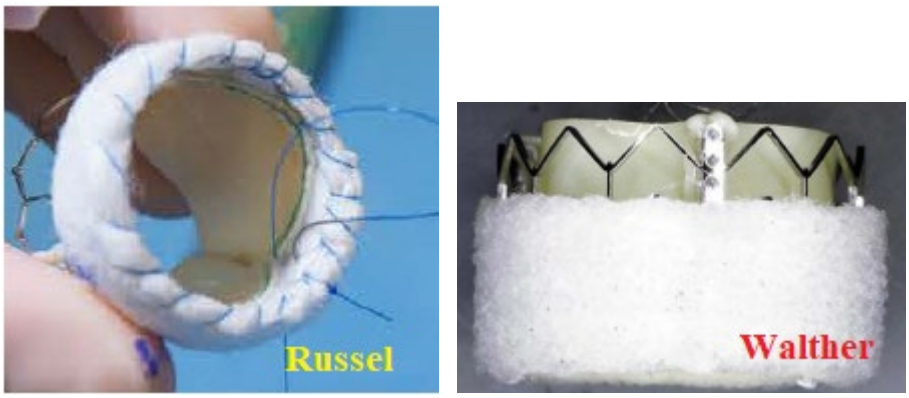

Id.; Ex. 1007 [Walther] 2 (Fig. 1). As shown in Russell, when the valve is in the crimped position (*i.e.*, in the image below) in the context of an open chest surgery using a trans-atrial route (*i.e.*, not endovascular), the outer cloth is bunched and significantly thicker than when the valve is in the expanded position (image E).

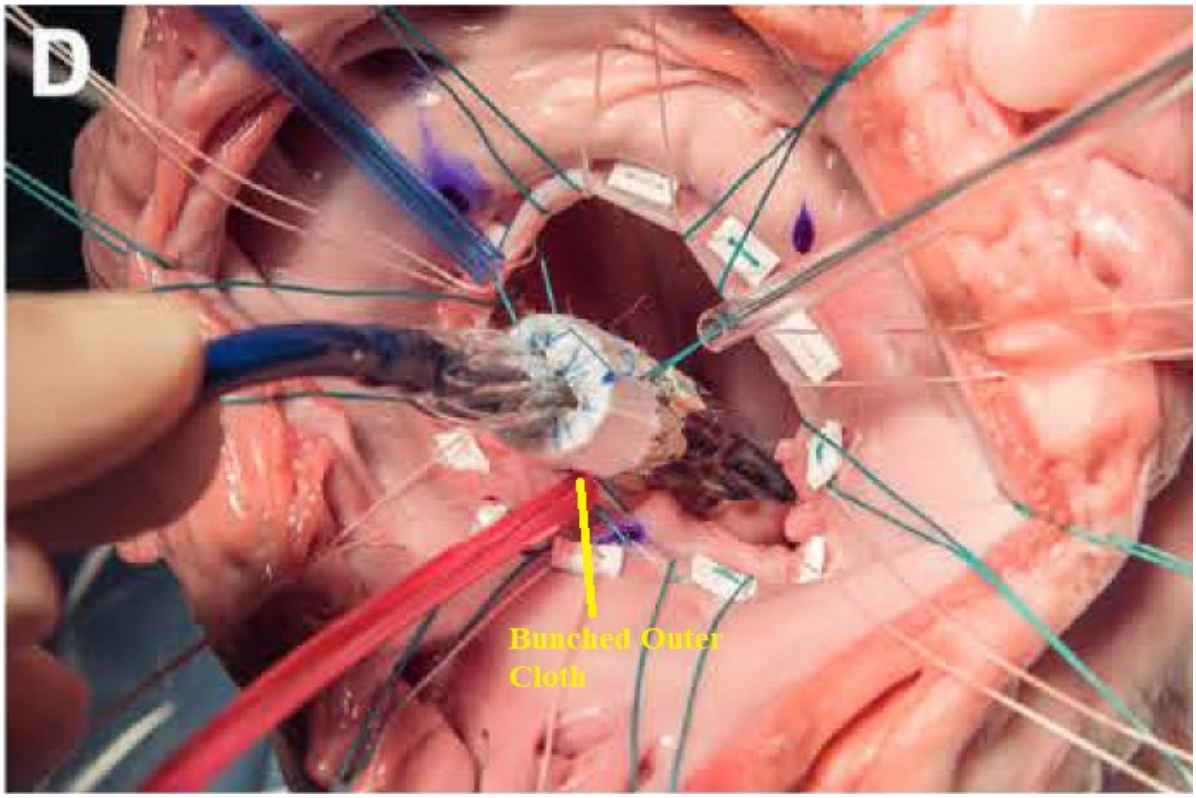
D
Bunched Outer
Cloth

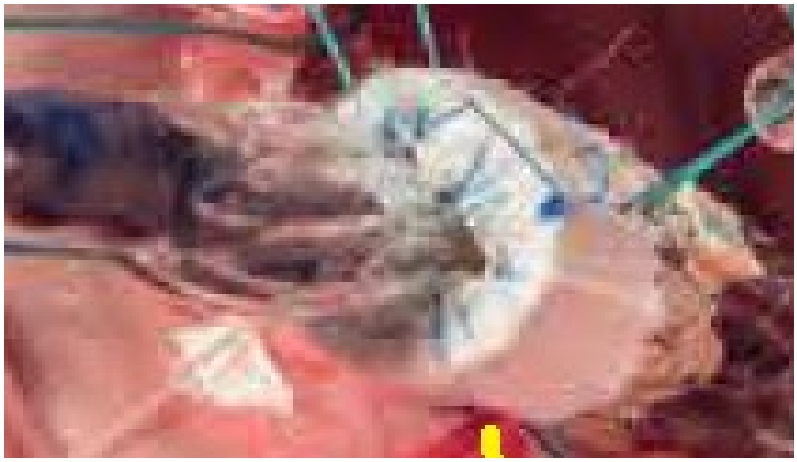

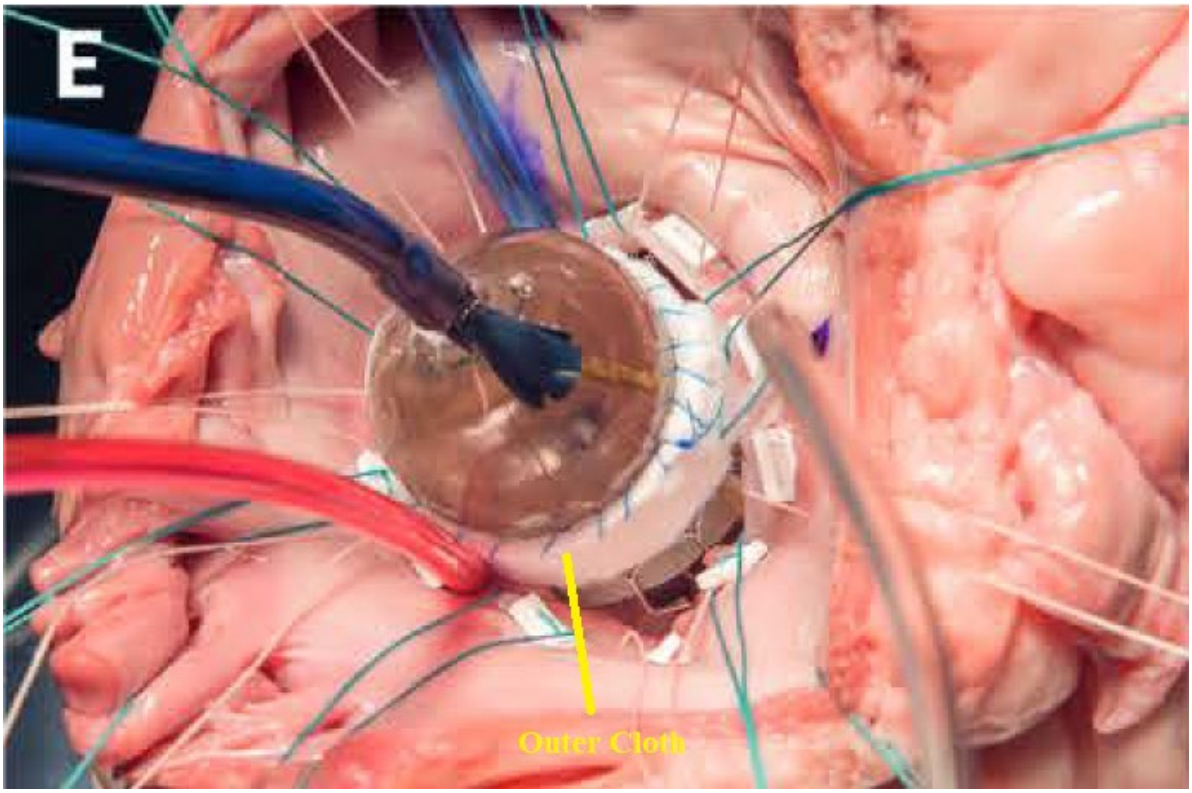

Ex. 2009 [Russell] 7 (Fig. 4) (annotated). This bunching of the outer cloth when the valve is crimped is further shown in a video referenced in the Russell article which at 3:48-4:12 shows the crimped valve being positioned and at 5:00-5:30 shows the expanded valve. Ex. 2010 [Russell-Video]. As seen in the video, and in the screenshots therefrom below, the crimping causes the outer cloth to bunch up, adding significant diameter to the delivery profile when compared to the cloth in the expanded position.

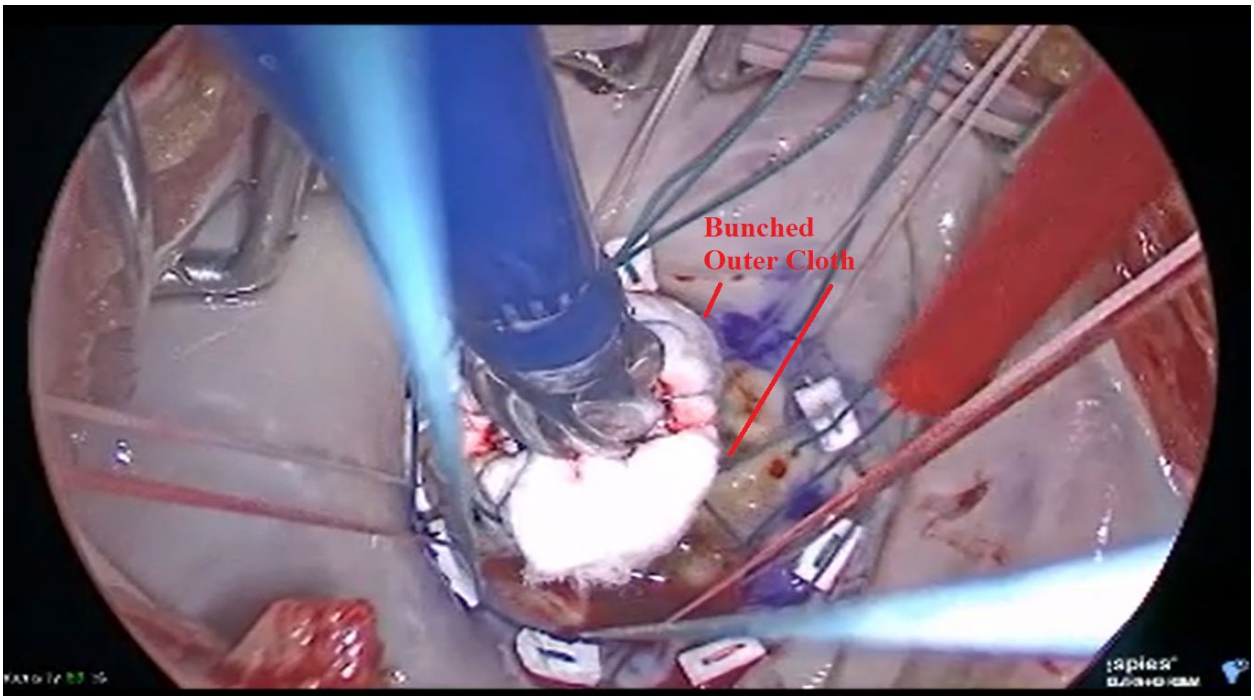

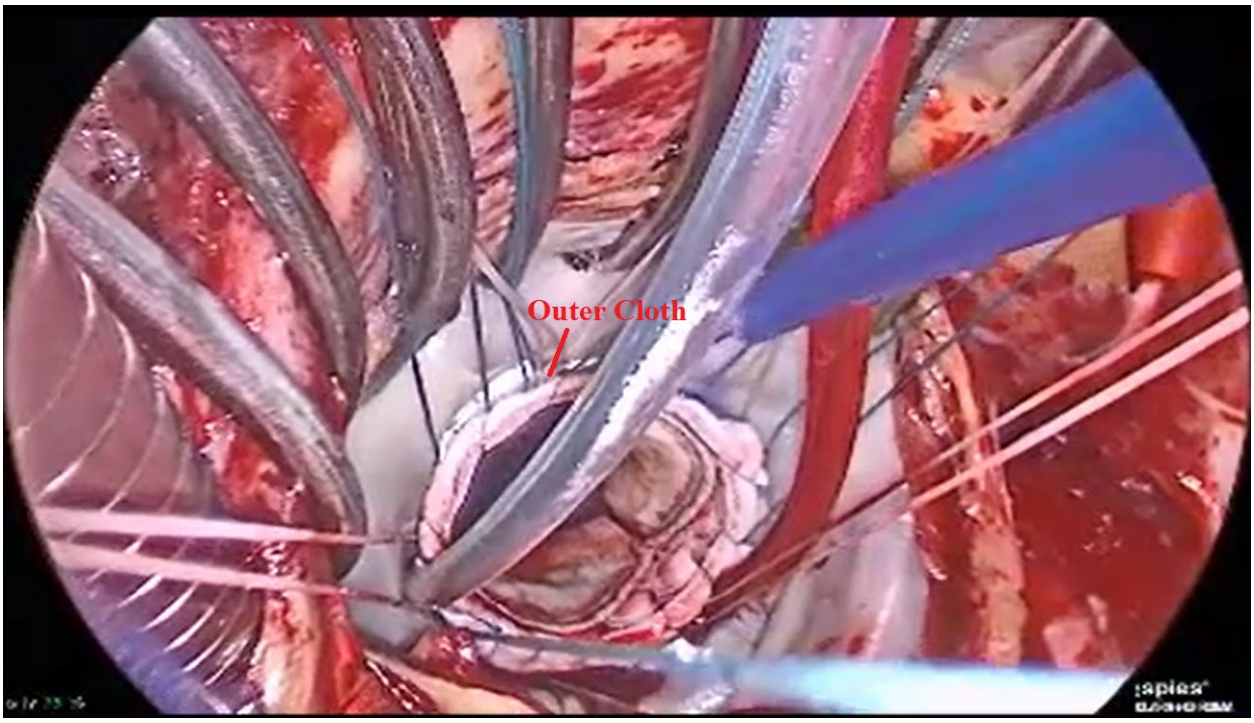

Id., 3:55, 5:20. Indeed, as shown in the video, the surgeon is required to use forceps in order push the bunched up outer cloth into position in

> the annulus of the mitral valve (which is much larger than the femoral artery).

> *Id*., 3:49. Thus, a POSITA would know that such a bunched up outer cloth would prevent any valve from being crimped tightly enough to be delivered endovascularly.

Ex. 2002 [Brecker-Decl.] ¶44.

Petitioner does not account for the bunching that occurs when a cloth covered valve is crimped or even attempt to explain how the valve could remain suitable for endovascular delivery with a bunched outer cloth. Indeed, Petitioner, ***the party with the burden of proof***, does not explain, much less prove, what the delivery profile would be for any of its asserted combinations involving Walther's outer cloth. Pet., 60-62, 102-104. Despite acknowledging that the maximum

allowable delivery profile for endovascular delivery through the femoral artery is 8 mm, *id*., 63, Petitioner never even asserts that any of its proposed Walther combinations would have a delivery profile of 8 mm or less. *Id*., 60-62, 102-104. Petitioner confirms that the absolute smallest delivery profile of any of its asserted valves ***without*** the Walther cloth is around 4 mm. *Id*., 61-63 (citing Ex. 1045 [Cribier '321] 9:19-22, Ex. 1010 [Spenser] 27:65-28:2); *see also* Ex. 1008 [Levi] 8:56-59. A POSITA would understand that the addition of a cloth, like the cloth shown in Walther or Russell, would result in a bunched outer cloth when the valves were crimped, adding significantly to the delivery profile, and increasing it well-over 8 mm. Ex. 2002 [Brecker-Decl.] ¶45 (citing Ex. 2009 [Russell]; Ex. 2010 [Russell-Video]). Again, Petitioner has not shown, or even clearly contended, that any valve larger than 8 mm could be "delivered endovascularly," as required by the claims. Accordingly, the Petitioner's proposed addition of Walther's outer cloth to the devices in Spenser, Cribier '321, or Levi, neither discloses nor renders obvious a valve that can be "delivered" or "deployed" "endovascularly" that meets the other requirements of the claims.

Notably, the Federal Circuit has recently spoken to a similar failure in the exact same field. *Snyders Heart Valve LLC v. St. Jude Med., LLC*, 977 F.3d 1232 (Fed. Cir. 2020) concerned a prosthetic heart valve patent including a "sized and shaped" limitation that required the valve to be small enough to "fit[] between the

cusps of the intact native valve," as opposed to a larger valve "fitted for the space left after removing the native valve." *Id*., 1241. The Court determined that the asserted prior art valve was too large to meet this limitation as it "require[d] *removal* of the native heart valve." *Id.* (internal quotation marks removed, emphasis in original). Removal of the native heart valve is exactly what is done in Russell, the reference that generally shows the proposed Levi plus Walther combination. Just as in *Snyders*, the asserted combinations are too large to meet the "endovascular delivery" limitation and, thus, fail to render the claims obvious.

2. Adding Spenser II To Spenser, Cribier '321, Or Levi Would Make The Device Too Big For Endovascular Delivery. (Grounds 2, 4, 8, 12, 14, All Claims)

Like Walther, adding Spenser II's outer cloth to Spenser, Cribier '321, or Levi would make the resulting devices too big for endovascular delivery. Petitioner relies upon the compressible material/fibers in Spenser II's Figure 22 as the alleged "sealing material." Petitioner concedes that Spenser II is "similar" to Walther in this regard (Pet., 26) and, like Walther, the "compressible material 'may resemble a cloth or fabric ....'" Pet., 45, (citing Ex. 1011 [Spenser II] ¶145).

Just as with Walther's cloth discussed above, a POSITA would know that Spenser II's outer cloth would bunch up when the valve is crimped, significantly increasing the delivery profile. *See* Section II.B.1; Ex. 2002 [Brecker-Decl.] ¶47. Further, as discussed above, Petitioner does not show, or even clearly contend, that

a valve over 8 mm could be delivered endovascularly. As Dr. Brecker explains, the resulting combination of Spenser II's outer cloth with any of Spenser, Cribier '321, or Levi would have a well-over 8 mm delivery profile:

> It was well-recognized at the time that adding an external material (like Spenser II's cloth) to a transcatheter valve would significantly add to the delivery profile and was in direct conflict to all design imperatives, which was to downsize devices. A POSITA would expect Petitioner's proposed Spenser II-Spenser/Cribier '321/Levi combinations to have a delivery profile well-over 8 mm. This would render such a design impractical for endovascular delivery, as demonstrated by Russell.
>
> Spencer II describes a compressible material, 1-5mm thick. Ex. 1011 [Spenser II] ¶145. While it is not possible to precisely determine how much Spenser II's cloth would affect delivery profile, by way of illustration, it is possible to calculate an estimate of the impact based on dimensions in Spenser II/Spenser/Cribier '321/Levi, and some reasonable assumptions. In short, by looking at a cross-section of Petitioner's proposed combination of an outer cloth wrapped around a valve in the expanded state, we can estimate a minimum amount by which the outer cloth increases the area of that cross-section. Once we have done that, we can derive a conservative minimum estimate of how much that same amount of cloth would necessarily increase the diameter of a cross-section of the device when the valve is reduced to the crimped state, assuming the cloth was evenly distributed around the crimpled valve, and did not compress further when crimped.

Spenser II provides that its cloth "has a thickness ranging from about 1 to 5 mm." Ex. 1011 [Spenser] ¶145. Spenser, Cribier '321, and Levi teach valves that have a diameter of 25 mm, 20-35 mm, and 26 mm respectively when fully expanded. Ex. 1010 [Spenser] 27:67-28:2; Ex. 1045 [Cribier '321] 8:51-55; Ex. 1008 [Levi] 8:56-59. Accordingly, even if we were to assume a POSITA used the thinnest possible cloth in Spenser II, Petitioner's proposed combination using the smallest Cribier '321 20 mm diameter (10 mm radius) expanded valve covered by a 1 mm cloth resulting in a 22 mm diameter (11 mm radius) valve, as illustrated below.

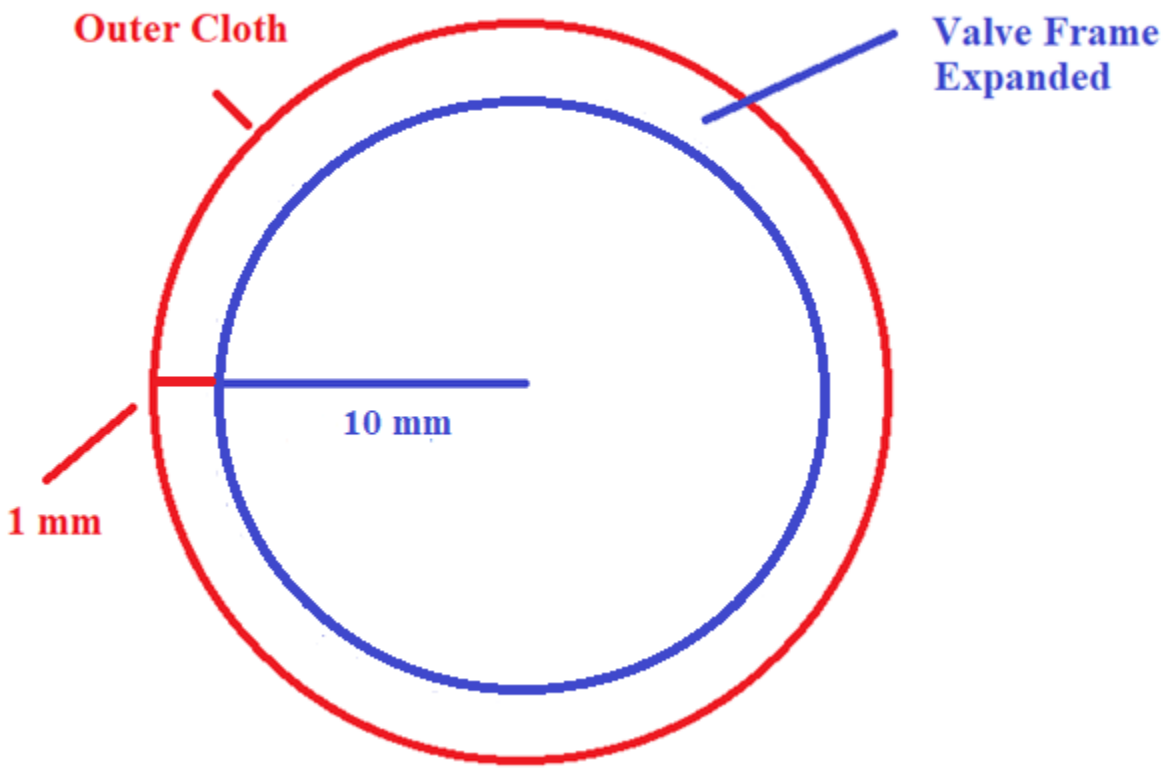

From this we can conservatively estimate how much cloth is required for a cross-section of the proposed device (A_{cloth}) by calculating the total area of a cross-section of the cloth-covered valve ($\pi*(11\ mm)^2$) and subtracting the area of a cross-section of just the valve ($\pi*(10\ mm)^2$).

$$A_{cloth} = \pi*(11\ mm)^2 - \pi*(10\ mm)^2 = 65.97\ mm^2$$

Accordingly, Petitioner's proposed combination requires 65.97 mm^2 of outer cloth in a given cross-section of the device.

Petitioner asserts that Cribier '321's device, when crimped—without the cloth—would have a diameter of about 4-5 mm. Pet., 61 (citing Ex. 1045 [Cribier '321] 9:19-22). Again using the smallest possible crimped diameter (4 mm), the cross-section area of the crimped valve would therefore have an area of 12.57 mm^2 ($A_{crimped} = \pi*(2\ mm)^2 = 12.57\ mm^2$). If the 65.97 mm^2 cloth were added to the 12.57 mm^2 of crimped valve, the cloth-covered crimped valve would have a total area of 78.54 mm^2. Even if we were to assume that the cloth would form a perfect circle around the crimped valve, and no portions of the cloth would bulge more in certain areas (as Russell indicates)—two assumptions that artificially reduce the diameter significantly—this would mean that the radius of the crimped Spenser valve with the uncompressed Spenser II outer cloth would be at a minimum 5.48 mm.

$$Radius_{crimped} = \sqrt{(78.54/\pi)}$$

Accordingly, using conservative estimates, Petitioner's proposed combination of Cribier '321's valve with the Spenser II's outer cloth would have a diameter of at least 10 mm (when the valve is crimped and the cloth uncompressed), 25% too large for transfemoral delivery

> (Ex. 1010 [Spenser] 27:65-67) and endovascular delivery more generally. While Spencer II describes its cloth as "compressible material," there is no information or data presented on how compressible the cloth is. Furthermore, in my clinical experience of compressing such devices, pressure on one area of the cloth leads to bunching and expansion in another and therefore it is unlikely there would be a large reduction in the achieved caliber of the device (and a large reduction would be required to achieve 8 mm). As noted, however, this is a rough conservative estimate that likely underestimates the effects of the bulging shown in Russell. This effect will counteract the effect of compressibility. Further, these calculations are based on the absolute smallest numbers across all three references.
>
> Thus, adding Spenser II's cloth to any of Spenser, Cribier '321, or Levi would render the resulting device inappropriate for endovascular delivery.

Ex. 2002 [Brecker-Decl.] ¶¶48-52.

Accordingly, adding the outer cloths in Walther or Spenser II to Spenser, Cribier '321 and Levi would result in a combined device too large to be "delivered endovascularly." At a minimum, Petitioner fails to prove otherwise.

C. Petitioner's Arguments Fail To Demonstrate Its Proposed Combinations Could Be "Delivered Endovascularly."

As discussed, adding Walther's or Spenser II's outer cloth to Spenser, Cribier '321, or Levi would significantly increase the delivery profile, rendering

the combination unsuitable for endovascular delivery. Petitioner's arguments fail to adequately account for this increase in delivery profile or explain how any of its proposed combinations could be delivered endovascularly.

In discussing the combination of Walther's or Spenser II's outer cloth with Spenser, Cribier '321, or Levi, Petitioner first contends that any of these combinations could have been delivered endovascularly through the common iliac artery. Pet., 61 ("POSITAs had demonstrated that devices not suitable for delivery through smaller blood vessels could still be endovascularly delivered to the heart through the common iliac artery."); *id*., 103. Petitioner cites Ex. 1043 [Kainuma] for this proposition, but, Kainuma is irrelevant as it does not involve or even mention ***any*** cloth-covered valve like Walther's or Spenser II's. Ex. 2002 [Brecker-Decl.] ¶54. Additionally, as discussed above, while Petitioner seems to contend that the common iliac artery is a larger blood vessel, Pet., 61, Petitioner does not identify the maximum allowable delivery profile for the iliac artery or explain how any of its Walther or Spenser II combinations would fit within that profile. Indeed, Petitioner does not even clearly contend that a valve with a delivery profile larger than 8 mm (the maximum size for the femoral artery) could be delivered through the common iliac artery. Pet., 61, 103. In fact, Kainuma, cited for delivery via the common iliac artery, used a 7.3 mm (22F) sheath, less than the 8 mm maximum for endovascular transfemoral delivery. *See* Section II.A.

And, as discussed, according to Petitioner's expert, "the delivery of valves through the femoral and common iliac artery is [] ***generally the same***." Ex. 2008 [0193-Buller-Decl.] ¶109.

Moreover, Petitioner, the party with the burden of proof, does not provide any explanation of what the delivery profile would be for any of its proposed Walther or Spenser II combinations or how that delivery profile would allow for endovascular delivery. Pet., 61-62, 102-104. Instead, Petitioner ignores the fact that Walther was an in-vitro (*i.e.* bench-top) test using the 33F (***11 mm***) Ascendra delivery system designed for surgical transapical delivery, not endovascular delivery. *Id*., 61-62; Ex. 1007 [Walther] 2, 7; *see also* Ex. 1017 [Cheung] 1-2 (showing clinical implantation of Walther's 9000MIS cloth valve via transapical delivery). Petitioner does not explain how adding Walther's cloth to a different SAPIEN valve would yield a different result–a valve capable of endovascular delivery–particularly when Walther explains that its cloth-covered valve is suitable for delivery approaches "***where tight crimping is not an issue***." Ex. 1007 [Walther] 7. Further, per the analysis provided in Section II.B.2, even using the most conservative calculations the Spenser II combinations would have a delivery profile well over the 8 mm limit for endovascular delivery. *See* Ex. 2002 [Brecker-Decl.] ¶¶49-51, 55.

Significantly, even if we assumed, *arguendo*, that any of the Walther or Spenser II combinations ***could*** be delivered endovascularly via the common iliac artery, Petitioner fails to explain why a POSITA would be motivated to do such a thing as the common iliac artery is only accessible through an invasive surgery. As Dr. Brecker explains:

> I do not believe a POSITA would be motivated to conduct an endovascular surgery via the common iliac artery. Indeed, to the contrary, a POSITA would, for several important reasons, have been strongly motivated to move away from using the common iliac artery. The principal benefit of an endovascular delivery, *e.g.*, via the transfemoral approach is that it is a non-invasive approach wherein a purely percutaneous method may be used and the patient may be discharged from hospital in a matter of days. Transfemoral delivery rapidly became the overwhelmingly dominant approach, and has remained so ever since. An "endovascular" delivery via the common iliac artery, by contrast, is far more invasive, involves major vascular surgery, is associated with numerous complications and has been used very rarely. It has ***never*** been used in the overwhelming majority of implanting hospitals. To reach the common iliac artery, a surgeon would need to utilize a large incision typically used for renal (kidney) transplant surgery. The vessels lie deep in the retroperitoneal space. There is a need for surgical dissection through the anatomical layers of the anterior abdominal wall, including multiple layers of abdominal muscles. Arterial control by means of vascular clamps is required. In

many cases because of the difficulties of access, vascular surgeons prefer anastomosing a graft onto the common iliac vessel as it can be easier to access and close a graft than the native common iliac artery itself. Ex. 2012 [Retroperitoneal-Video]. Make no mistake, this is major vascular surgery and requires an experienced vascular surgical team to undertake it safely. It carries with it major risks of vascular injury, dissection, vessel rupture, infection, bleeding, renal failure and a requirement for post-operative intensive care. Compared to a femoral surgical cutdown, iliac artery cutdown is associated with greater blood loss (2.6-fold greater blood loss), 82% longer procedure time, 1.5 days additional hospital stay, and 1.8-fold higher rate of perioperative complications. Ex. 2013 [Lee] 1. Whilst this approach allows a larger caliber device to be used for an ***abdominal aneurysm repair*** for example, no responsible cardiologist in the field of transcatheter valve replacement, where the devices are lower profile, would have any motivation at all to use this approach. Indeed, designing a transcatheter valve which mandated this approach would be considered perverse. This explains why Petitioner Edwards states that its 26F (8.6 mm) Ascendra+ delivery system is "[d]esigned for transapical and transaortic delivery," and ***not*** for delivery via the common iliac artery. Ex. 2014 [Ascendra] 1; Ex. 2015 [Ascendra-FDA].

Kainuma, a reference cited by Petitioner but not a part of any combinations, does not suggest otherwise. Indeed, Kainuma accessed the common iliac artery with the invasive "retroperitoneal approach" discussed above. Ex. 1043 [Kainuma] 3. Furthermore, Kainuma itself

> confirms that "[w]e consider transfemoral access as the technique of choice because it is less invasive than the transapical approach...."

Ex. 2002 [Brecker-Decl.] ¶¶57-58.

Next, Petitioner argues that a POSITA would have been motivated and capable of "adapt[ing] the outer sealing material or valve for" delivery "through smaller blood vessels." Pet., 62. Petitioner contends that (1) a POSITA "had access to a range of suitable cloths," (2) Petitioner itself "had developed delivery systems having smaller diameters than those initially used with Petitioner's SAPIEN," and (3) Petitioner itself "had developed a variety of ways to adapt a heart valve's outer frame and leaflets to create additional space for an outer cloth." *Id*.

Petitioner, however, fails to point to any particular proposed further modification of any of its combinations of Spenser/Cribier '321/Levi and Walther/Spenser II. *Apple Inc., v. Uniloc Luxembourg S.A.*, IPR2017-01993, Paper 10, 41 (PTAB Mar. 8, 2018) ("Petitioner fails to proffer adequately any ***particular*** modification of [the references]"); *Harmonic Inc. v. Avid Tech., Inc.*, 815 F.3d 1356, 1363 (Fed. Cir. 2016) ("[T]he Petitioner has the burden from the onset to show ***with particularity*** why the patent it challenges is unpatentable."); 35 U.S.C. § 312(a)(3) (similar). Nor does Petitioner explain how any such further

(unspecified) modification would allow for endovascular delivery in view of, *e.g.*, the bunching effect discussed above. *See* Section II.B.1.

Moreover, if a POSITA were to modify its Walther or Spenser II combinations further in this unspecified manner, Petitioner fails to demonstrate that the alleged "sealing material" would meet other limitations, including that it "treat[s] paravalvular leaks" and "includes a plurality of radially extending fibers" and more. Notably, Petitioner relies upon Walther and Spenser II's original outer cloth for these requirements and has not even attempted to show that these limitations would be met if the outer cloth were further modified so as to reduce its profile. Pet., 39-46, 92-93. In this regard, Petitioner's combinations not only are not proven to meet the endovascular delivery limitation, they are not even consistently presented in a manner that satisfies all of the limitations of the claims.

Additionally, Petitioner's assurance that "POSITAs had access to a range of suitable cloths having varying thicknesses and densities," Pet., 62, ignores the cloth's function in Walther and Spenser II. Walther states "[w]hen a Sapien™ valve is expanded in the CEP valve, the rigid base does not easily conform to the profile of the expanded stent frame, which leaves gaps between the two valves…." Ex. 1007 [Walther] 1. Thus, Walther seals by having a thick outer skirt that closes the "gaps between the two valves" so as to conform "the rigid base … to the profile of the expanded stent frame." *Id*. In other words, a certain thickness is

necessary and selecting a smaller cloth suitable for endovascular delivery would have frustrated Walther's purpose. Spenser II has the exact same issue, explaining that its "compressible material ***expands*** after deployment at a treatment site … [and] fills the gaps between the stented valve and the surrounding tissue." Ex. 1011 [Spenser II] ¶145. This indicates that Spenser II must have a certain level of thickness in order to "expand" as intended. Ex. 2002 [Brecker-Decl.] ¶60.

Petitioner, moreover, seems to be inviting the Board to employ hindsight to sift through Petitioner's various unsubstantiated "known techniques" to come up with some as yet unspecified *ex post facto* combination that would make the cloth-covered SAPIEN suitable "for endovascular delivery." Pet., 62. The Board has previously declined such invitations. *Costco Wholesale Corp. v. Robert Bosch LLC*, IPR2016-00042, Paper 28, 3-4 (PTAB July 7, 2016) ("It is not our role to sift through the information provided and determine on our own if there is a reasonable likelihood that the asserted references show unpatentability; it is Petitioner's role to provide a *specific explanation demonstrating* a reasonable likelihood of such. 37 C.F.R. § 42.104(b).") (emphasis in original); *Tyco Fire Prods. LP v. Victaulic Co.*, IPR2016-00278, Paper 13, 11 (PTAB Sept. 7, 2016) (similar).

Petitioner then contends that Spenser "discloses that the 'maximal size of a catheter inserted into the femoral artery should be no more than 8 mm in diameter'" and that "adding a compressible material 1 mm thick to Spenser's 4-

mm valve would have resulted in a device suitable for endovascular delivery." Pet., 63. Despite citing the thickness of Spenser's cloth on its own when on a valve in the expanded state, and the diameter of Spenser's crimped valve (*i.e.* not the expanded state) ***without an outer cloth***, Petitioner does not explain what the delivery profile would be for its proposed combination. *Id*. Indeed, as discussed in Section II.B.2, Petitioner is comparing apples-and-oranges for the cloth is only 1 mm in the expanded position. In the crimped position, the 1 mm becomes much thicker and even if we were to conservatively exclude bulging (*see* Ex. 1010 [Spenser] FIG. 26c), the combined diameter of Spenser II's cloth with Spenser/Cribier '321/Levi would, using conservative assumptions, still be far too large for endovascular delivery. *See* Section II.B.2; Ex. 2002 [Brecker-Decl.] ¶61.

Next, Petitioner argues that the '011 does not disclose sizing information for its "sealing material, collagen fibers, or valve" and therefore "cannot argue that the adaption of a valve incorporating Walther's outer cloth or Spenser II's compressible material for endovascular delivery would have been beyond POSITAs' skill." Pet., 63. This is demonstrably incorrect as the '011's figures (*e.g.*, Figure 8) clearly show a less dense fiber construction than what is shown in the prior art:

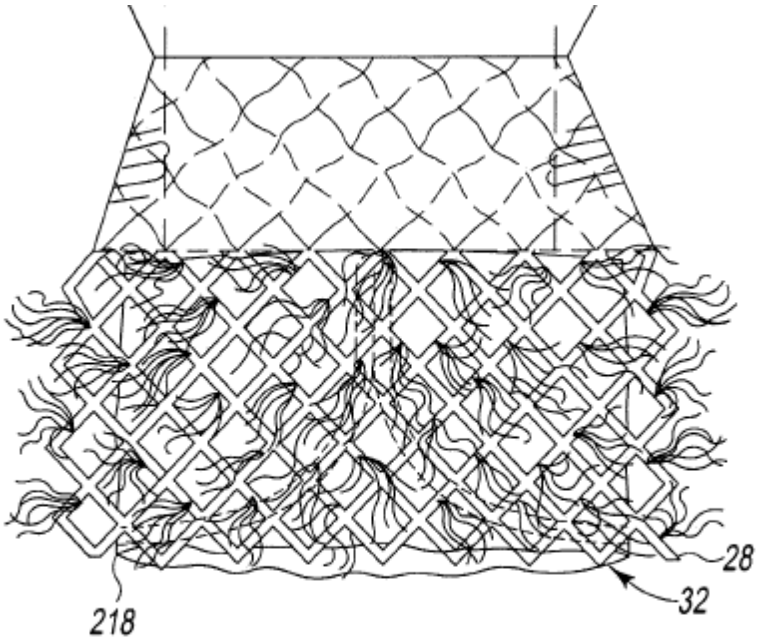

Fig. 8

Ex. 1001 [’011] Fig. 8. Further, this assertion makes no sense. Petitioner’s combinations involve taking three references designed for transfemoral delivery and adding an “outer cloth” to them that would render them unsuitable for that purpose. *See also* Section II.D.1, *infra*. This is a problem with Petitioner’s combinations, not the ’011’s disclosure. Petitioner, moreover, cannot carry its burden of proof as to its combinations by pointing to the ’011’s disclosure.

Finally, for the Levi combinations only, Petitioner contends that Levi teaches that “[w]hen crimped, the frame 12 has a reduced diameter region extending along a portion of the frame … that generally corresponds to the region of the frame covered by the outer skirt 18” so that the outer skirt “does not increase the overall crimp profile of the valve,” and that “Walther’s outer cloth … would

also cover the reduced diameter region." Pet., 103; *see also id.*, 94. Petitioner, however, fails to explain how Levi's supposed "reduced diameter region" 174 would be able to accommodate Walther's and Spenser II's far thicker outer cloth:

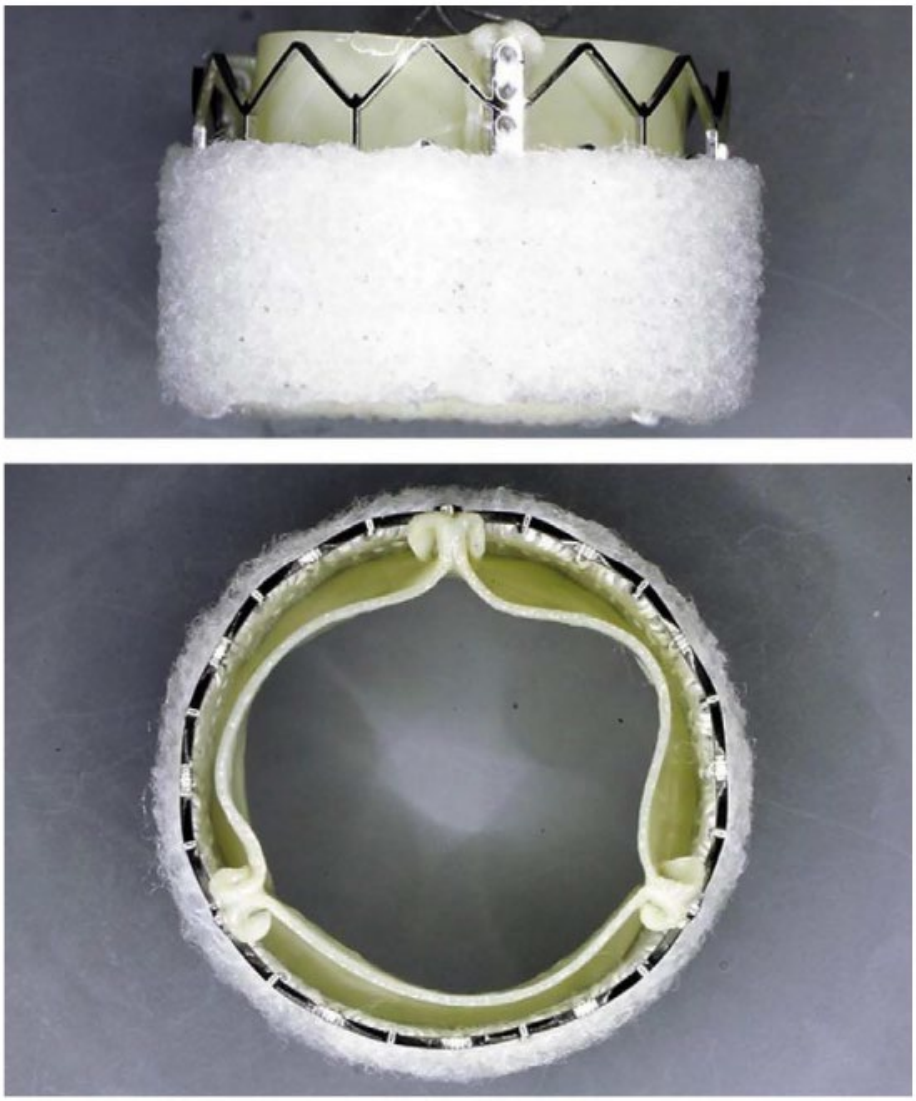

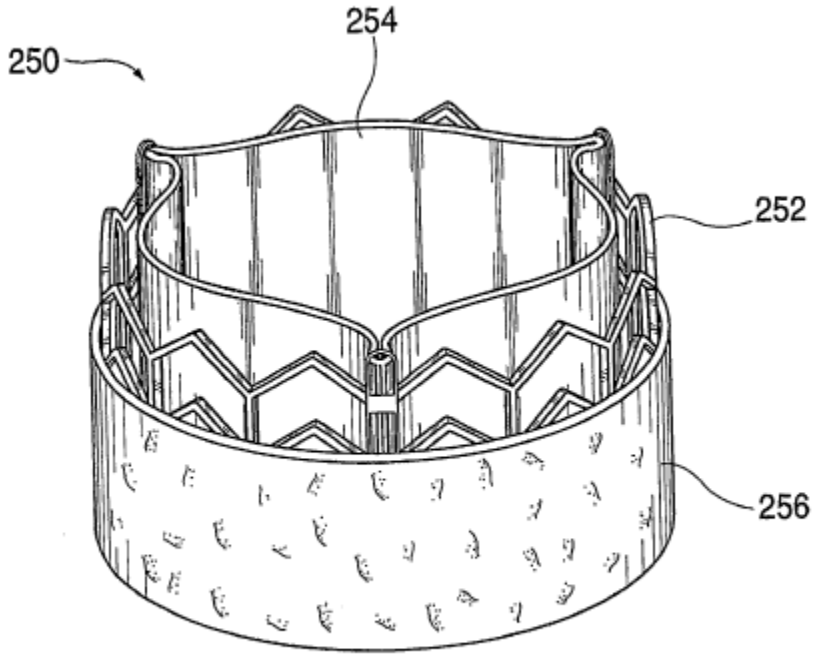

FIG. 22

Ex. 1007 [Walther] Fig. 1; Ex. 1011 [Spenser II] Fig. 22.

Moreover, Levi states that the inflow end (area indicated by 174) had a crimped profile of 12 F compared to a 14 F profile at the remainder of the valve. Ex. 1008 [Levi] 8:56-59 ("In one example, the frame of a 26-mm valve, when crimped, had a diameter D_1 of 14 French at the outflow end of the valve and a diameter D_2 of 12 French at the inflow end of the valve.").

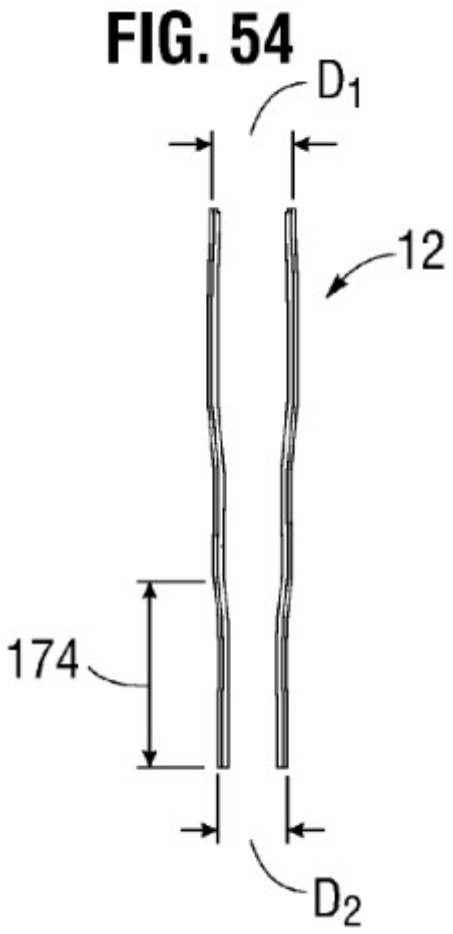

Ex. 1008 [Levi] Fig. 54. Thus, this 2F reduced diameter portion would have only allowed for an outer seal that was 0.33 mm (1F) thick (when crimped) before the seal would extend radially beyond the non-reduced diameter portion of Levi's frame. This is far less than the 1.0 to 5.0 mm uncrimped seal of Spenser II or the seal depicted in Walther.

Furthermore, these outer skirts are clearly taller than Levi's outer skirt, and the Walther skirt would clearly cover more than the "reduced diameter region" 174 that "generally corresponds to the region of the frame covered by the outer skirt

18." Pet., 103. Thus, even if Walther's or Spenser II's seal could be added to Levi, the seal would necessarily extend distally beyond the reduced diameter region 174.

D. Petitioner Further Fails To Explain Why A POSITA Would Be Motivated To Add Walther's Or Spenser II's Outer Cloth To Spenser, Cribier '321 Or Levi, When Doing So Would Prevent Transfemoral Delivery.

As just discussed, Petitioner's combinations fail to teach the claimed heart valve as Petitioner's combinations cannot be "endovascularly delivered." *See* Sections II.A-D. That is reason enough to reject the combinations. But even if that, somehow, could be overlooked, Petitioner further fails to demonstrate why a POSITA would be motivated to add Walther or Spenser II's outer cloth to Spenser, Cribier '321, and/or Levi in the first place as doing so would frustrate the purpose of Spenser, Cribier '321, and Levi, which is to provide a ***narrow*** valve suitable for ***transfemoral delivery***. *See* Section II.D.1-2. Petitioner offers various justifications for its litany of combinations (addressed below), but each of them fail and none of them address the fatal and fundamental problem that Petitioner's combinations render its references inoperable for their intended purpose. *See* Section II.D.3.

1. Spenser's, Cribier '321's and Levi's Devices Were Designed To Have A Narrow Profile Suitable For Transfemoral Delivery

Each of the primary references (Spenser, Cribier '321, and Levi) teaches a heart valve designed with a narrow delivery profile so that the valve could be delivered transfemorally. Ex. 2002 [Brecker-Decl.] ¶66. As explained below, these references note the tight size constraints necessary to create a device small enough to fit within the femoral artery.

Spenser plainly concerns transfemoral delivery. *See* Ex. 1010 [Spenser] 2:6-11 (discussing "… implanting the valve at the desired location via a large blood vessel such as ***the femoral artery***"). Indeed, Spenser makes clear that its point of novelty is designing a valve capable of reducing to a very narrow diameter (***4 mm***) in order to fit within the femoral artery:

> A typical size of an aortic prosthetic valve is from about 19 to about 25 mm in diameter. ***A maximal size of a catheter inserted into the femoral artery should be no more than 8 mm in diameter***. The present invention introduces a device, which has the ability to change its diameter from about 4 mm to about 25 mm. Artificial valves are not new; however, artificial ***valves in accordance with the present invention possess the ability to change shape and size for the purpose of delivery and as such are novel***.

Id., 27:64-28:5. Thus, the entire purpose of Spenser's invention is to produce a valve that can be small enough to fit into the femoral artery. Petitioner for its part

concedes that Spenser's heart valve is configured for "endovascular delivery." Ex. 2031 [IPR2021-01527 Petition] 6, 60 (same), 68 (similar).

Similarly, Cribier '321 repeatedly explains that its device is compressible to 4-5 mm wide in order to be delivered through the femoral artery. Ex. 1045 [Cribier '321] 9:19-21 ("When folded by compression, the diameter of said frame is about 4 to 5 millimeters, in view of its transcutaneous introduction in the femoral artery"); 10:27-29. Indeed, Cribier '321 states that the valve "should preferably have the smallest possible external diameter" in order to be delivered through "a peripheral artery" such as "the femoral artery." *Id.*, 14:56-60.

Like Spenser and Cribier '321, Levi too emphasizes the importance of a narrow design capable of transfemoral delivery. In the Background of the Invention, Levi notes the "drawbacks associated with conventional open-heart surgery," and alludes to other references concerning "minimally-invasive surgical approaches." Ex. 1008 [Levi] 1:57-59. Levi further indicates that "***[a]n important design parameter*** of a transcatheter heart valve ***is the diameter of the folded or crimped profile***" and that this is "important because it directly influences the physician's ability to advance the transcatheter heart valve through the ***femoral artery*** or vein." *Id.*, 2:1-7; 14:60-64 (similar); 6:46-49 (similar). Levi further explains that "a smaller profile allows for treatment of a wider population of patients, with enhanced safety." *Id.*, 2:5-7. Thus, the very problem Levi is trying

to solve is how to make a valve with a delivery profile small enough to fit within the "femoral artery or vein." *See* Pet., 101-102 (recognizing Levi's focus upon the femoral artery).

It is no accident that these references concern devices designed for a very narrow profile, suitable for transfemoral delivery. As Petitioner and Dr. Buller have admitted in a related IPR, the "transfemoral approach" is "'the technique of first choice' and safer than the transapical approach, which was associated with 'more adverse events and higher mortality rates.'" Ex. 2031 [IPR2021-01527 Petition] 40 (quoting Ex. 1009 [Conradi] 515-516); Ex. 2032 [IPR2021-01527 Buller-Decl.] ¶129 (same). Dr. Brecker confirms that transfemoral delivery would have been the "overwhelmingly preferred approach." Ex. 2002 [Brecker-Decl.] ¶70 (citing Ex. 2016 [Tanawuttiwat], Ex. 2017 [Doshi]).

2. Petitioner's Combinations Fail Because They Would Render Levi, Cribier '321 And Spenser Inoperable For Their Intended Purpose.

As discussed, Spenser, Cribier '321 and Levi describe valves designed with a narrow profile such that they can be delivered through the femoral artery. *See* Section II.D.1. As also discussed, adding Walther's or Spenser II's outer cloths to any of these devices would significantly increase the delivery profile, making them too big for transfemoral delivery or for any endovascular delivery. *See* Section II.A-C. Petitioner fails to demonstrate that a POSITA would have been motivated

to make any of its proposed combinations, when the modification would make the resulting devices unsuitable for their intended purpose, *i.e.*, a valve with a narrow profile for transfemoral delivery. *DePuy Spine, Inc. v. Medtronic Sofamor Danek, Inc.*, 567 F.3d 1314, 1326 (Fed. Cir. 2009) (combination not obvious "if the prior art indicated that the invention would not have worked for its intended purpose ..."); *In re Gordon*, 733 F.2d 900, 902 (Fed. Cir. 1984) (similar).

3. Petitioner's Proffered Motivations Fail.

As noted in Sections II.B-C, the Board need not reach Petitioner's motivations because none of the resulting combinations can be delivered endovascularly. If Petitioner's proffered motivations are to be considered, they too fail.

Spenser/Cribier '321-Walther/Spenser II (Grounds 1-4, All Claims): Petitioner argues "POSITAs would have been motivated to combine Walther's outer cloth with the valves in Spenser or Cribier '321" because "all three references describe similar heart valves," and "Walther expressly describes combining an outer cloth with valves (SAPIENs) similar (if not identical) to Spenser's Figure 44a and Cribier '321's Figures 5a/6d." Pet., 40-41. Petitioner ignores, however, that Spenser and Cribier '321 teach heart valves for ***transfemoral delivery*** (Section II.D.1) and, as noted, that intended purpose would be precluded by the combination.

Petitioner additionally argues that a POSITA would be motivated to add outer cloths because "Spenser describes combining an outer sealing cuff 21 with valves similar (if not identical) to Spenser's Figure 44a and Cribier '321's Figures 5a/6d." Pet., 41. Petitioner, however, fails to explain why Spenser's "outer sealing cuff 21" would motivate a POSITA to add the thick outer cloth in Walther or Spenser II, when doing so would increase the delivery profile and prevent transfemoral delivery.

Petitioner finally argues that a POSITA would be motivated to add Walther's cloth to Spenser of Cribier '321 "because Walther's outer cloth serves a different purpose than the extended graft covering" in those valves. Pet., 42. Again, this does not account for the fact that such an addition would render the combinations incapable of transfemoral delivery.

Notably, in the context of its claim 7 argument, Petitioner does not even contend that any of these combinations would be capable of transfemoral delivery without further modification. Pet., 61-62. These modifications themselves fail for the reasons specified in Section II.C.

<u>Levi-Walther/Spenser II (Ground 7-8, 11-14)</u>: Petitioner contends that a "POSITAs would have also found it obvious to replace Levi's bulging outer skirt with Walther's outer cloth or Spenser II's compressible material" and would have been motivated to use either "Walther's outer cloth because the cloth prevents

paravalvular leakage and promotes tissue ingrowth," or "Spenser II's compressible material because its radially extending fibers reduce or prevent paravalvular leakage." Pet., 92. Petitioner further contends that this "would have merely entailed substitution of one known element (outer cloth/compressible material) for another (Levi's outer skirt) to yield the predictable results of reducing paravalvular leakage" and that "POSITAs would have found it obvious to select ***any one*** of these finite, predictable options." *Id*. Petitioner, however, fails to explain why a POSITA would choose Walther's cloth or Spenser II's compressible material to prevent leakage when Levi already has an outer skirt for that exact purpose. *Id.* Indeed, if "Walther's outer cloth," "Spenser II's compressible material" and "Levi's bulging outer skirt" all "yield the predictable results of reducing paravalvular leakage," and "POSITAs would have found it obvious to select ***any one***" of these "options," as Petitioner asserts (*id.*), then a POSITA would not be motivated to choose the options that would render the device incapable of transfemoral delivery. Ex. 2002 [Brecker-Decl.] ¶71.

Finally, Petitioner contends that Levi "suggests adding other components to the inflow portion of the outer frame," but fails to explain why a POSITA would add a component that would add to the delivery profile and prevent transfemoral delivery. Pet., 94. Accordingly, Petitioner fails to demonstrate that a POSITA would be motivated to replace Levi's outer skirt with Walther's outer cloth.

….

For all these reasons, Petitioner fails to demonstrate that any of its proposed combinations of Walther's or Spenser II's cloths with the valves in Spenser, Cribier '321, or Levi render obvious a "valve assembly" that "is delivered endovascularly," which includes "a sealing material positioned externally to the outer frame" of the valve.

III. THE PETITION FAILS TO DEMONSTRATE THAT LEVI DISCLOSES OR RENDERS OBVIOUS "A 'SEALING MATERIAL' THAT INCLUDES 'RADIALLY EXTENDING FIBERS.'" (GROUNDS 5, 6, 9, 10)

The '011's claims require that "the sealing material includes a plurality of ***radially extending fibers*** that form a circumferential surface that ***extends outwardly of the outer frame***." This limitation is an important aspect of the inventive structure intended to prevent paravalvular leak and migration of the proximal component within the aortic walls. Such fibers are clearly shown in the '011's figures and, equally clearly, are not present in Levi. *See* Section III.A. Petitioner's *de facto* argument that Levi inherently discloses "radially extending fibers" falls far short of meeting that demanding standard. *See* Section III.B.

A. "Radially Extending Fibers" Are A Significant Aspect Of The Inventive Structure And Are Manifestly Not Shown In Levi.

As the '011 teaches, radially extending fibers are a significant aspect of the inventive structure and are intended to prevent paravalvular leak and migration of the proximal component within the aortic walls:

> collagen fibers 234 are attached to the proximal section 220 to aid in ***preventing paravalvular leaks and migration of the proximal component*** 212 within the aortic walls. The fibers 234 extend outwardly from the proximal section 220 …

Ex. 1001 ['011] 12:31-36; *see also* 18:10-15. The radially extending fibers are readily apparent in the '011's figures and shown extending outwardly from the proximal section 220:

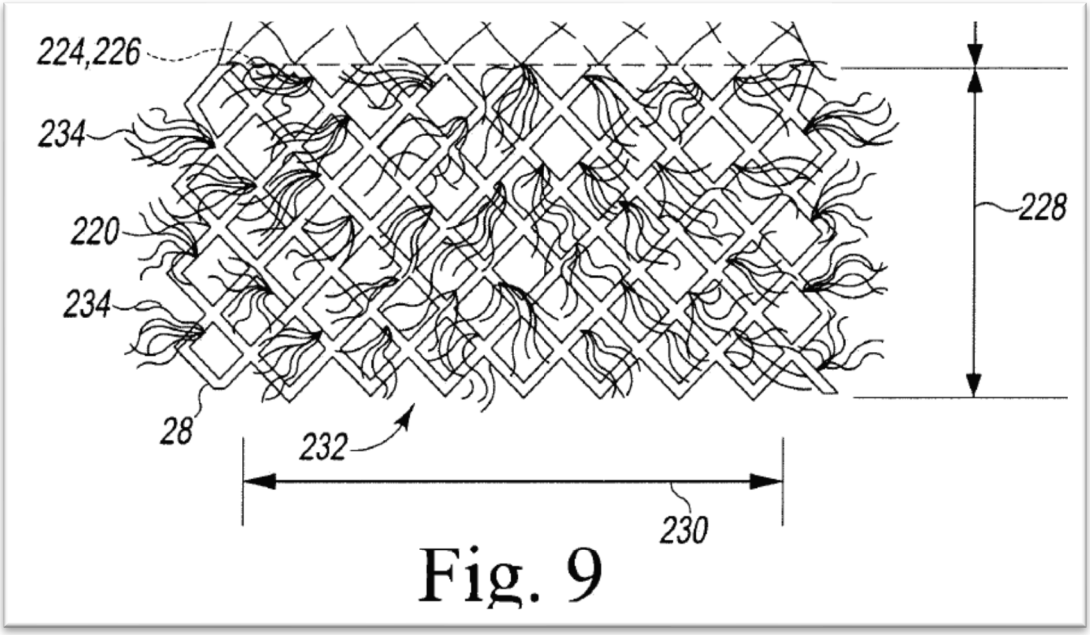

Id., Fig. 9; *see also* Figs. 11, 12, 14; Ex. 2002 [Brecker-Decl.] ¶73.

In Grounds 5-6 and 9-10, Petitioner relies upon Levi alone for this limitation but fails to prove that Levi discloses or renders obvious "radially extending fibers." Petitioner points us to Levi's outer skirt 18 as depicted in Levi's Figure 3:

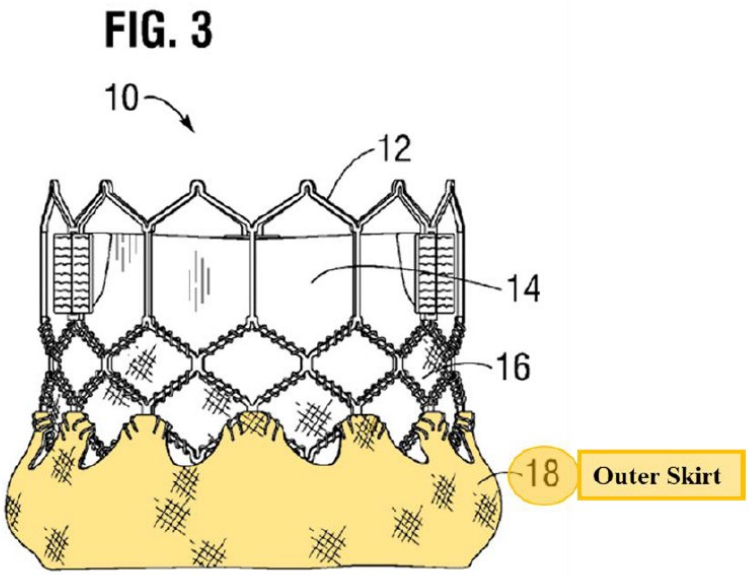

Pet., 89 (Petitioner's annotation). Levi's Figure 3 was considered in prosecution (*see* Section V.A, *infra*; Ex. 2018 [Intentus] 4) and it clearly does not depict "radially extending fibers." Indeed, the distinction between Levi and the '011 in this regard could not be clearer:

Levi, Unlike The ’011, Does Not Disclose “Radially Extending Fibers”	
Levi	**’011**
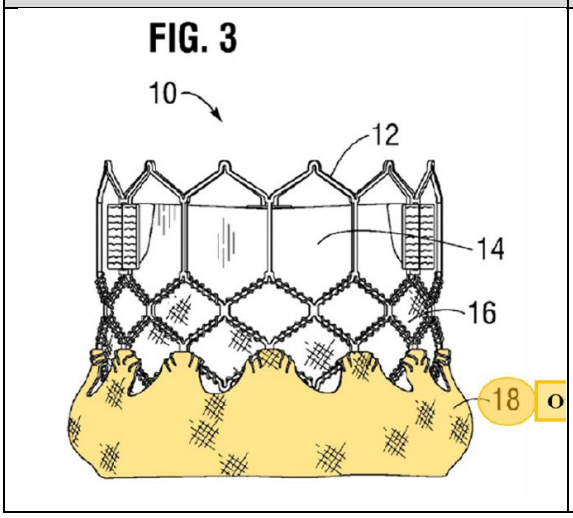	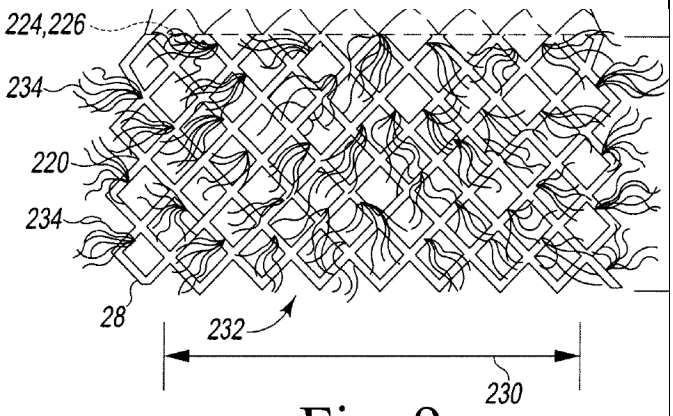 Fig. 9

See also Ex. 2002 [Brecker-Decl.] ¶74.

Levi’s disclosure is no different. It has no discussion of fibers that “radially extend” or “extend outwardly” from its “outer skirt.” Indeed, Levi’s description of its “laser cut” “outer skirt” confirms the absence of any such fibers:

> ***The outer skirt 18 can be laser cut or otherwise formed from a strong, durable piece of material, such as woven PET*** ... The outer skirt 18 can have a substantially straight lower edge 160 and an upper edge 162 ...

Ex. 1008 [Levi] 13:50-54; see also Section III.B.2. For these reasons, Levi does not disclose “radially extending fibers” and it is hardly surprising that the ’011 issued over Levi. *See* Section V.A.

B. Petitioner's Arguments That Levi Discloses "Radially Extending Fibers" Do Not Remotely Surpass The High Standard Of Inherency.

Nonetheless, Petitioner contends that Levi discloses "radially extending fibers":

> The outer skirt includes excess material that bulges radially outwardly as the frame expands. The excess material allows the skirt to "fill gaps between the frame 12 and the surrounding native annulus to assist in forming a good fluid-tight seal between the valve and the native annulus."
>
> Levi's outer skirt includes cross hatching to illustrate that the outer skirt is made of a plurality of woven PET threads or fibers … ***POSITAs would have understood*** that each fiber is a radially extending fiber that extends outwardly of the outer frame because the outer skirt "bulge[s] outwardly" from the frame. ***Levi therefore discloses*** a sealing material that includes a plurality of radially extending fibers as recited in claim 1.

Pet, 89-90 (citations omitted).

Petitioner, however, does not identify any express disclosure of "radially extending fibers" in Levi and, consequently, Petitioner's argument lies in inherency, requiring Petitioner to prove that Levi disclosures ***necessarily*** indicate "radially extending fibers." *See, e.g.*, *PAR Pharm. v. TWi Pharms., Inc.*, 773 F.3d 1186, 1195-96 (Fed. Cir. 2014) ("A party must [] meet a high standard in order to

rely on inherency ... the limitation at issue necessarily must be present ...”). Petitioner does not come close to overcoming this “high standard.” Petitioner’s arguments, addressed in turn below, each fail.

1. Petitioner Fails To Prove That Levi’s Outer Skirt’s “Bulge” Discloses “Radially Extending Fibers.”

Petitioner contends that Levi’s outer skirt is formed of “a plurality of woven PET threads or fibers” and argues that “each fiber is a radially extending fiber that extends outwardly of the outer frame because the outer skirt ‘bulge[s] outwardly’ from the frame.” Pet., 89-90. The cited disclosures—Levi at 9:52-56 and 13:62-14:2—make no mention of radially extending fibers either at the bulge or otherwise. Notably, Levi at 9:52-56 is not even about the “outer skirt” and instead discusses the “inner skirt” 16. Moreover, neither Petitioner nor its expert proffer any explanation of why this “bulging” would cause any fibers to extend radially particularly as no such radially extending fibers are mentioned or are apparent from Levi’s figures. Indeed, Levi’s figures, including Figure 3 which Petitioner relies upon, do not reflect any change with respect to fibers radially extending depending upon the bulge as the outer skirt is identical and uniform—characterized by precisely the same hash mark grid—both where it does and does not bulge:

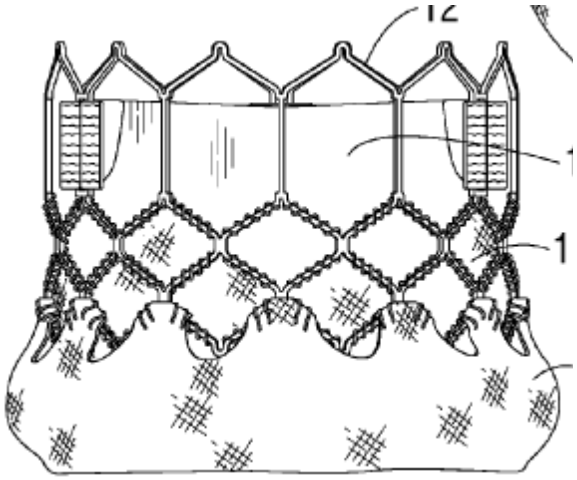

2. Petitioner Reliance Upon A Textile Reference That Does Not Mention PET, Much Less "Woven PET" Does Not Demonstrate That Levi's "Woven PET" Outer Skirt Is "Hairy."

Petitioner further argues that "POSITAs would have understood that the outer surface of the woven PET fabric would not be entirely smooth, but would necessarily have fibers, or strands, that extend radially outwardly from the surface of the fabric." Pet., 90. Petitioner further contends that the outer surface of Levi's outer skirt is hairy, arguing that the Tyagi reference shows that PET yarn "exhibits a property known as 'hairiness.'" *Id*. 90-91, *quoting* Ex. 1028 [Tyagi] 10.

Petitioner's final argument fails for multiple reasons. Petitioner fails to prove that Levi's outer skirt is made by PET yarn, as Levi only provides that "[t]he outer skirt 18 can be laser cut or otherwise formed from a strong, durable piece of material, such as ***woven PET*** ..." Ex. 1008 [Levi] 13:50-53. Notably, Petitioner fails to prove that "woven PET"—much less "laser cut" woven PET—would exhibit the hairiness quality Petitioner imagines.

Even if we were to assume Levi's "woven PET" is made from PET yarn, Petitioner fails to prove that "woven PET" is inherently hairy such that fibers would "radially extend." This is particularly true for woven PET suitable for cardiovascular applications. It is widely recognized in the field that woven PET is smooth with no "hairiness" or radially extending fibers. For instance, Meslmani's Fig. 1A, reproduced below, is a surface scanning electron microscope image of woven PET utilized for "cardiovascular applications." Ex. 2019 [Meslmani] Fig. 1A. As is readily apparent, the woven PET graft's surface is smooth. The fibers—which are tightly wound together—do not "radially extend" from the surface.

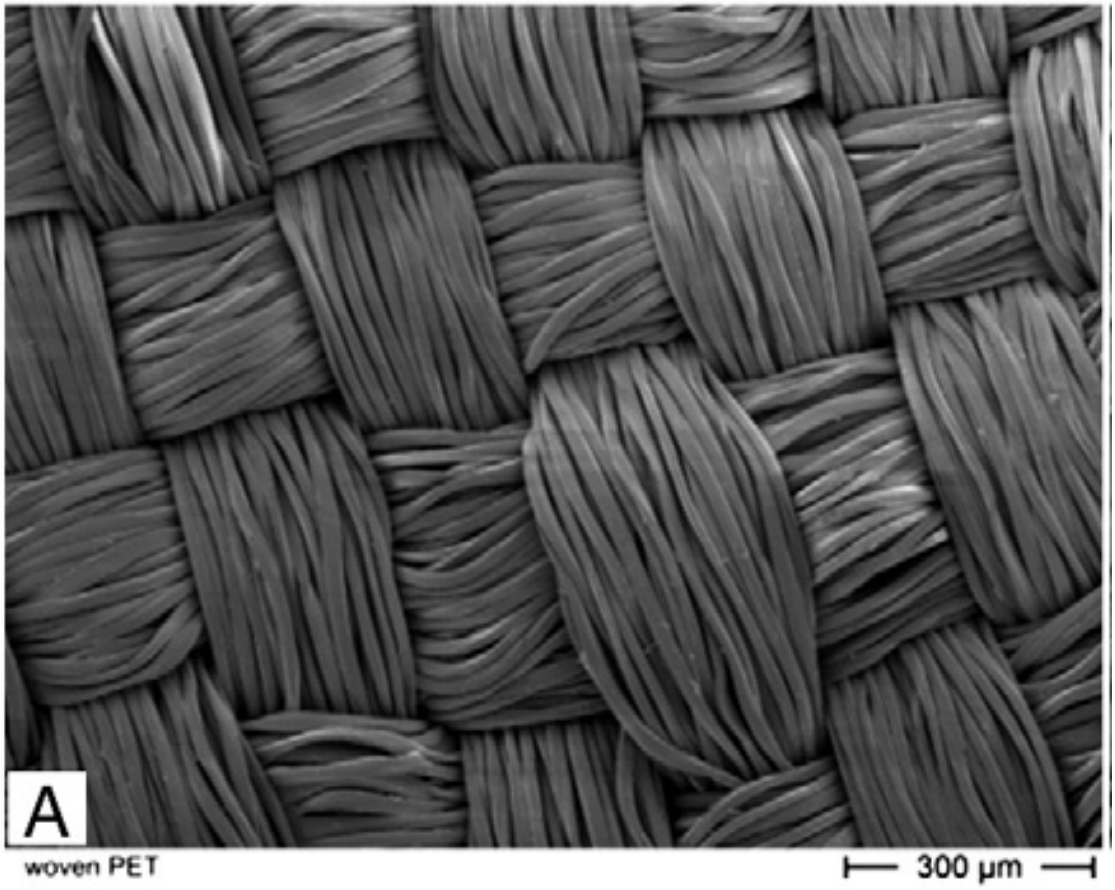

Fig. 1A of Meslmani

Similar such examples may be found in Rodrigues and De Block: Rodrigues discusses the properties of PET fibers utilized in aortic stent grafts. Ex. 2020 [Rodrigues] 23-24. Rodrigues' Fig. 8, reproduced below, is a surface scanning electron microscope image of woven PET and woven PET-LP. Similar to Meslmani, Rodrigues' SEM image also shows that the surface of woven PET is smooth and the fibers do not "radially extend" from the surface.

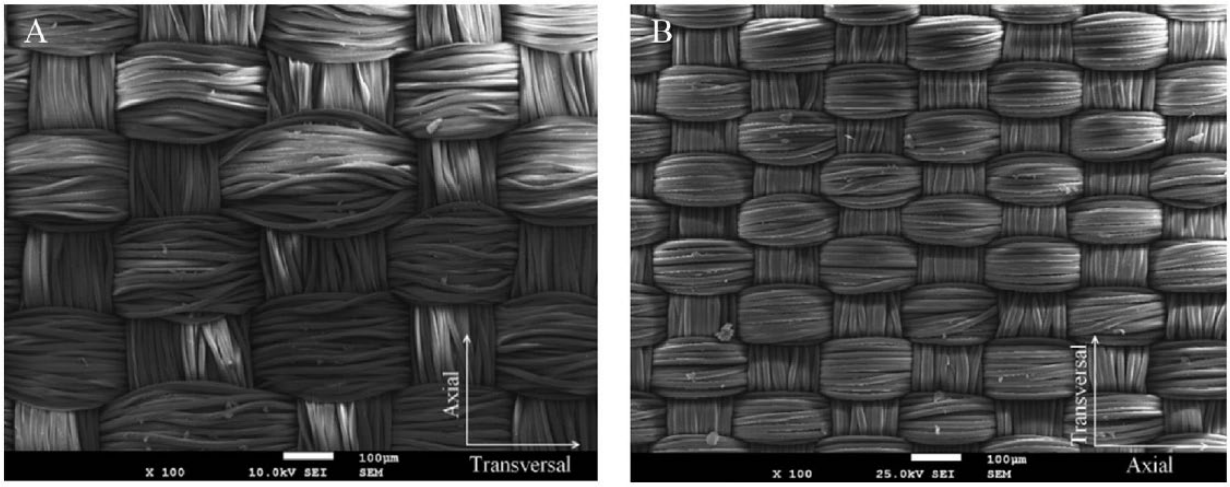

Fig. 8. Woven structures observed by SEM. (A) PET fabric; (B) PET-LP fabric.

Id., 27.

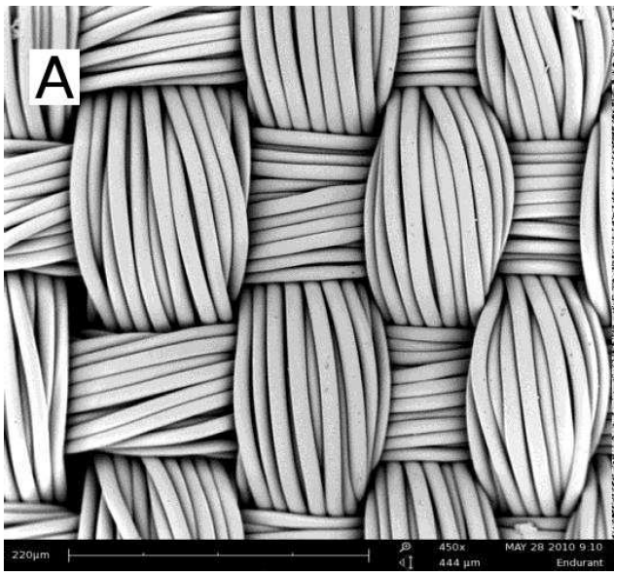

Ex. 2021 [De Bock] 26, Fig. 1.18A.

In contrast, Petitioner provides no evidence tending to show that woven PET, particularly that used in surgical applications, is inherently hairy or has fibers that radially extend. Certainly, Levi's figures and disclosure reveal no such "hairiness." The only reference cited by Petitioner, "Tyagi," is, in actuality, a paper titled "Yarn Structure and Properties from Different Spinning Techniques," is far afield. Whereas the instant case concerns endovascular transcatheter aortic valve repair, Tyagi was published by "The Textile Institute," "a unique orginisation in textiles, clothing and footwear" (Ex. 1028 [Tyagi], 2) and begins, "[t]he textile industry has witnessed many exciting technological innovations in spinning machines since the late 1960s." *Id.*, 5. Tyagi is directed towards yarns suitable for clothing and knitted goods (*id.*, 11-12, 20, 25, 32, 33), not aortic valve repair.

Notably, PET is not mentioned even once in Tyagi, much less "woven PET," that might be used in cardiovascular surgery. Tyagi contains no images of woven PET either. Tyagi does, however, provide SEM images of various yarns only one of which, III, below, it identifies as "hairy."

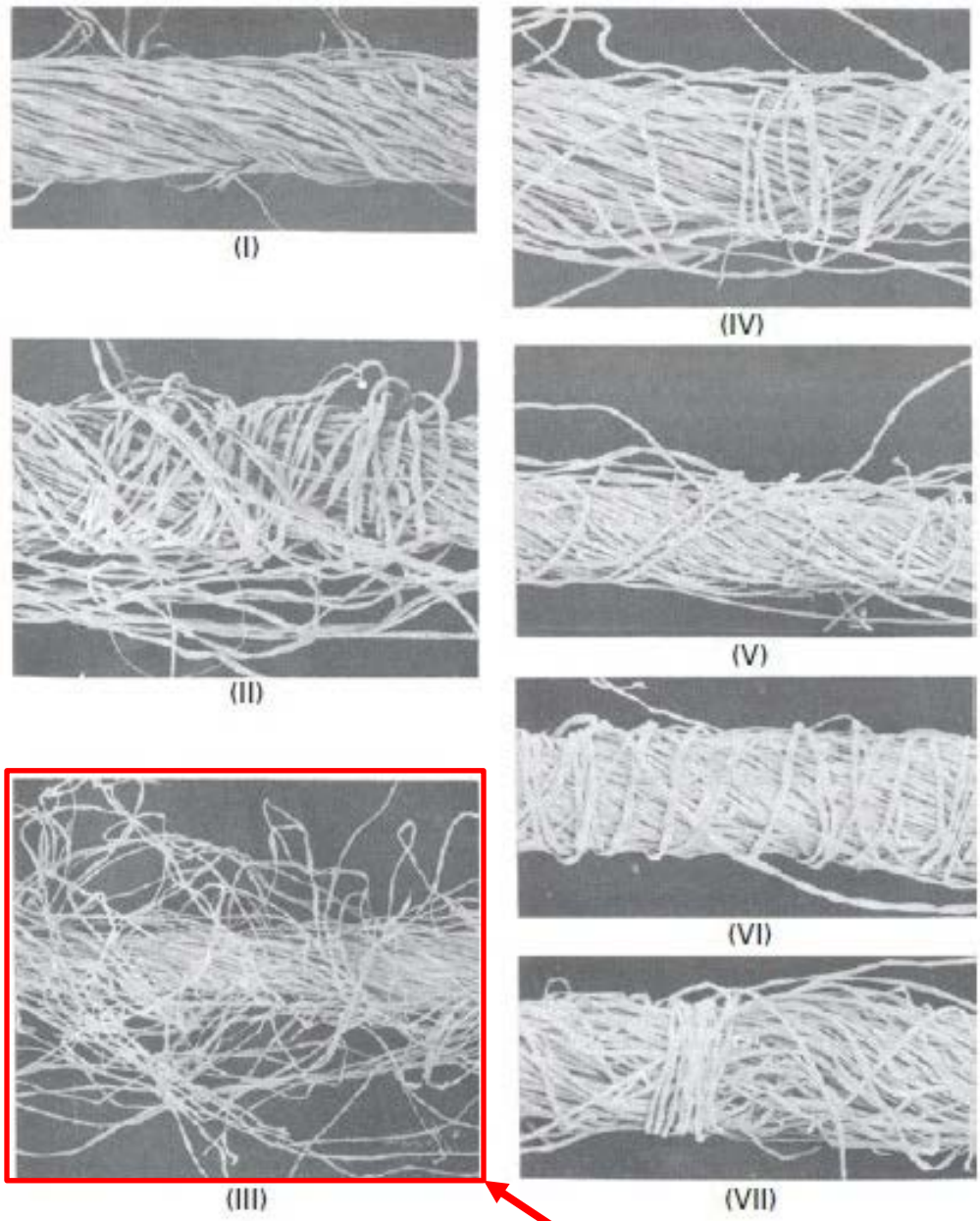

5.4 Scanning electron micrographs of rotor spun yarn surface structure: (I) ordered; (II) loosely wrapped; (III) hairy; (IV) multiple wrapped; (V) opposingly wrapped; (VI) tightly wrapped; and (VII) belt wrapped (Lawrence and Finikopulos, 1992).

Ex. 1028 [Tyagi] 13.

A simple comparison between Meslmani's "woven PET" image (or Rodrigues' or De Bock's for that matter) and `Tyagi's "hairy" image demonstrates beyond all doubt that even Tyagi would conclude that woven PET is not "hairy," much less with radially extending fibers.

Comparison Of Meslmani's "Woven PET" With Tyagi's "Hairy" Yarn	
Meslmani's Woven PET	**Tyagi's "Hairy" Yarn**
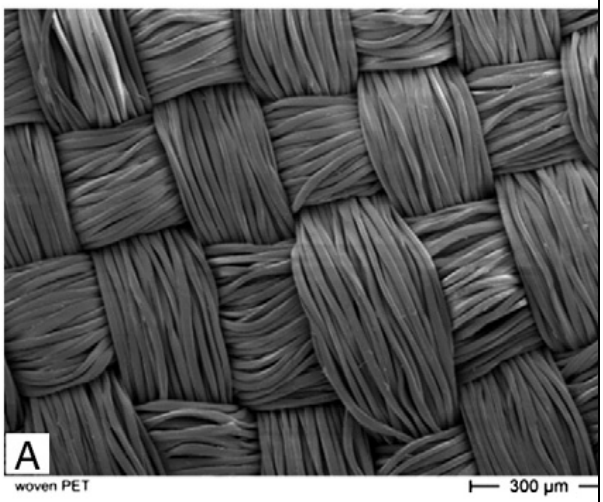	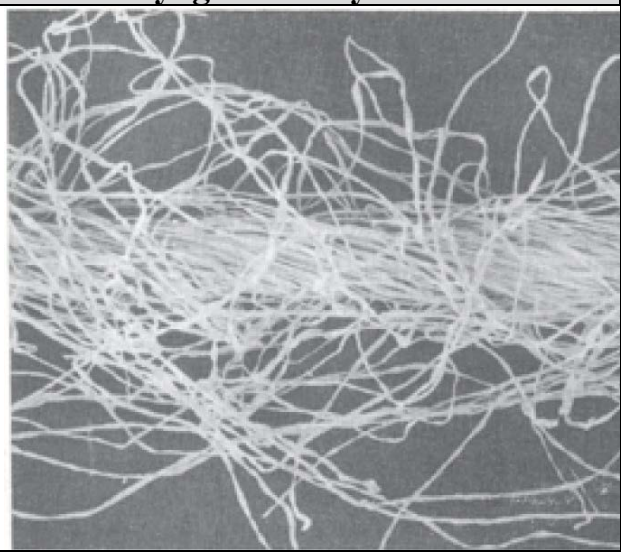

It should also go without saying that Tyagi's "hairy" yarns, used for clothing, and the like, are not suitable for cardiovascular surgery or direct connection to a person's arterial wall. Certainly nothing in Tyagi suggests otherwise. To the contrary, Tyagi explains that "hairiness" is a "desirable property in certain circumstances" such as textiles used for "thermal insulation" and "undesirable in other circumstances, depending upon the type of end-use and application of the resultant fabric." Ex. 1028 [Tyagi] 10.

Thus, Tyagi only further confirms that Levi's "woven PET" is neither "hairy" nor has "radially extending fibers."

3. <u>The Outer Skirt Of Petitioner's Commercial Product, SAPIEN 3, Is Made By "Flat Woven" PET With A Smooth Surface</u>

Further confirming that Levi does not disclose or render obvious "radially extending fibers" is SAPIEN 3, the commercial embodiment of Levi. According to FDA approval documents, Levi is one of the patents covering the SAPIEN 3. Ex. 2022 [FDA P200015] 26; *see also* Ex. 2023 [FDA P140031S085d] 97, 220; Ex. 2024 [P140031/S112] 131, 260; Ex. 2025 [FDA P140031-S125c] 143. The similarity between Levi and SAPIEN 3, including in the outer skirt is clear:

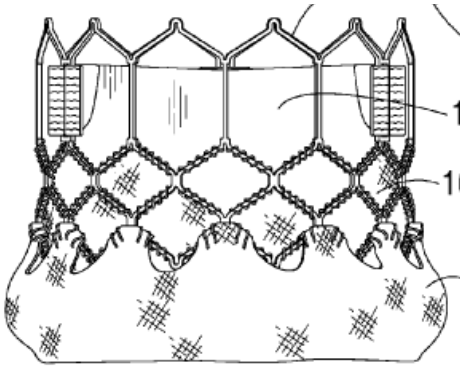

Levi

Levi describes its outer skirt as "woven PET" and, similarly, Petitioner describes the SAPIEN 3's outer skirt as "flat woven." The comparison below of

the SAPIEN 3 outer skirt with Tyagi further confirms that Levi's corresponding "woven PET" outer skirt is not hairy.

Comparison Of The SAPIEN 3's "Outer Skirt" With Tyagi's "Hairy" Yarn	
SAPIEN 3's "Outer Skirt"	**Tyagi's "Hairy" Yarn**
Ex. 2026 [Thomas] 3.	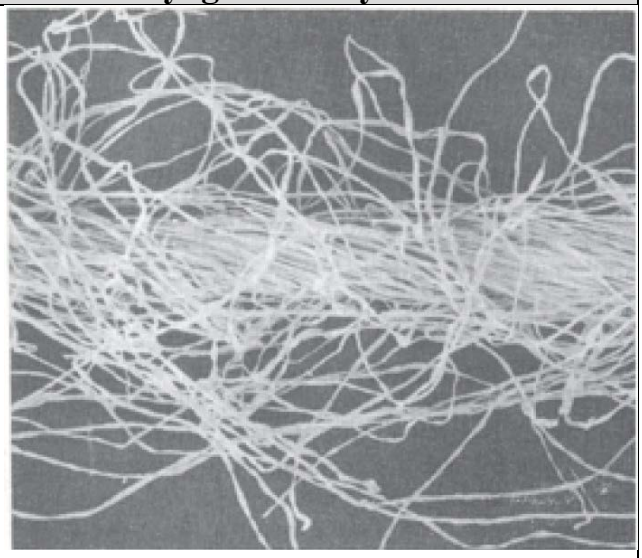
Id. 8.	

Further, as Dr. Brecker confirms:

> I have significant experience handling and implanting the SAPIEN 3 valve. I could not see anything on the outer skirt of SAPIEN 3 that a POSITA would consider to be "radially extending fibers."

Ex. 2002 [Brecker-Decl.] ¶76.

Thus, for a multitude of reasons, Petitioner fails to prove that Levi discloses or renders "radially extending fibers."

IV. PETITIONER FAILS TO PROVE THAT CRIBIER, SPENSER, OR LEVI TEACH "AN INNER FRAME … WHEREIN THE INNER FRAME IS A GRAFT COVERING" (ALL GROUNDS, ALL CLAIMS)

Claim 7 requires "an inner frame … wherein ***the inner frame is a*** cylindrically extending ***graft covering*** ...." Ex. 1001 ['011]. While Claim 12 requires that the "inner frame ***includes*** a cylindrically extending graft covering," Petitioner bases its claim 12 argument on an understanding that "the 'includes' language in claim 12 requires only an inner frame that ***is*** a graft covering," and relies exclusively on its claim 1 arguments for this limitation. Pet., 75-76. Petitioner relies on each of Spenser (Grounds 1-2), Cribier '321 (Grounds 3-4), and Levi (Grounds 5-14) for this limitation but fails to prove that any of these references (or anything else) discloses it. Rather, Petitioner insists that ***"a graft***

covering <u>cannot</u> be an 'inner frame.'"[5] Pet., 31 n. 5. In other words, Petitioner—***the party with the burden of proof***—argues that the limitation cannot be met. It follows axiomatically that Petitioner has not proven a limitation is met when it insists the limitation "cannot be met."

It is well-settled that in an IPR the "petitioner bears the burden of proof." *In re Magnum Oil Tools Int'l, Ltd.*, 829 F.3d 1364, 1381 (Fed. Cir. 2016); 35 U.S.C. § 316(e). Petitioner, as a matter of law and logic, fails to satisfy its burden. Petitioner points to each of Spenser, Cribier '321 and Levi in connection with the limitation "an inner frame … ***wherein the inner frame is a cylindrically extending graft covering*** ..." *See* Pet., 29-32, 82. Petitioner unequivocally states, however, "that ***a graft covering <u>cannot</u> be an 'inner frame.'"*** Pet., 31 n. 5. To put it simply, the claim requires "x wherein x is y" and Petitioner insists that "x" "cannot" be "y."

In accord, Petitioner never contends that any of the asserted references teach an "inner frame [that] ***is*** a graft covering." Instead, Petitioner qualifies its arguments with a hypothetical, stating that "***if*** an 'inner frame' can be a graft

---

[5] This is not to say that Patent Owner agrees with Petitioner's assessment but that is immaterial to whether Petitioner has satisfied its burden.

covering"—implicitly alluding to its prior statement that a "inner frame cannot be a graft covering"—then the reference teaches this limitation. Pet., 31 ("***if*** an inner frame can be a graft covering, Spenser's PET 571 is an inner frame that is a graft covering."), 32 (similar), 82 (similar). Petitioner's expert, Dr. Buller, likewise never states that an "inner frame ***can*** be a graft covering." Ex. 1003 [Buller Decl.] ¶¶ 102 ("to the extent an 'inner frame' can be a graft covering"), 206 ("if an 'inner frame' can be a 'graft covering'"), 277 (similar). Thus, neither Petitioner nor its expert provides ***any*** evidence or explanation as to ***why*** any of the alleged graft coverings it identifies are an "inner frame."

Petitioner, logically, is unable to prove a limitation it insists "cannot" be. Indeed, courts routinely find that a legal claim fails where a party admits that it cannot meet its burden. *See, e.g.*, *Mitchell v. Crescent River Port Pilots Ass'n*, 265 Fed. App'x 363, 370 (5th Cir. 2008) (plaintiff "affirmatively defeats his own claim by admitting that he cannot later meet his burden"); *Bongiovanni v. Compass Bank*, 2013 U.S. Dist. LEXIS 101944, *9 (E.D. Tex. Jun. 26, 2013) (similar); *Hillman v. AFGE*, 2020 U.S. Dist. LEXIS 114498, *19 (D.D.C.. Jun. 29, 2020) (similar); *Calvary Temple Assembly of God v. City of Marinette*, 2008 U.S. Dist. LEXIS 55500, *32-33 (E.D. Wis. Jul. 18, 2008) (similar).

Here too, the Petition must be denied because Petitioner concedes it cannot meet is burden.

V. INSTITUTION SHOULD BE DENIED UNDER § 325(D) BECAUSE PETITIONER'S REFERENCES ARE EITHER THE SAME AS OR CUMULATIVE OF REFERENCES CONSIDERED DURING PROSECUTION (ALL GROUNDS, ALL CLAIMS).

The Board should deny institution under § 325(d), because "***the same or substantially*** the same prior art and arguments were presented to the Office." *Becton, Dickinson & Co. v. B. Braun Melsungen AG*, IPR2017-01586, Paper 8, 17-18 (PTAB Dec. 15, 2017) (precedential); *Advanced Bionics, LLC v. MED-EL Elektromedizinische Geräte GmbH*, IPR2019-01469, Paper 6, 10 (PTAB Feb. 13, 2020) (precedential). Under *Advanced Bionics*' two-part framework, the Board first determines whether the same or substantially the same art or arguments were presented to the Office and, if so, considers whether the petitioner has demonstrated a material error by the Office. *Id*., 8, 10.

Here, Grounds 5 (Levi), 6 (Levi), and 8 (Levi/Spenser II) should clearly be rejected under § 325(d) as both Levi and Spenser II were before, and carefully considered by, the Examiners. *See* Section V.A. While Spenser, Walther, and Cribier '321 were not specifically before the Examiners, the portions of Spenser, Walther, and Cribier '321 relied upon by the Petitioner are, nonetheless, "substantially similar" to the considered portions of Levi and Spenser II. *See* Section V.B. Because Petitioner fails to demonstrate any error on the part of the Examiners, all grounds should be rejected under § 325(d).

A. Levi And Spenser II Were Considered By The Examiners (Grounds 5-6 And 8) And Petitioner Fails To Prove The Examiners "Materially Erred."

Petitioner's Levi (in the form of the Levi publication) and Spenser II references were plainly considered by the Examiners. Specifically, Patent Owner discussed and distinguished Spenser II in a response to an August 18, 2020 Non-Final Office Action. Ex. 1002 [Prosecution-History] 212. Patent Owner further discussed and distinguished both Spenser II and Levi in a response to a September 11, 2020 Notice of Allowance. *Id*., 117. In its September 22, 2020 response, Patent Owner even states in reference to Levi and Spenser II, "the profile of an outer seal where the valve is going to seal against the leaflets becomes even more important." *Id*., 117-118; *see also* 105-108 (corrected notice of allowance). This was not the first time the Examiners were put on notice of Levi and Spenser II. During the prosecution of the '011 patent's parent application, 16/808,137 (now U.S. Patent No. 10,792,172), Patent Owner notified the same Examiners of the relevant portions of Levi (through the Intentus Report) and Spenser II, that Petitioner relies upon here, through the Remarks submitted alongside the Preliminary Amendment filed May 1, 2020. Ex. 2030 ['172 Prosecution-History] 267-279; Ex. 2018 [Intentus] 4. In particular, the Applicant specifically directed the Examiners' attention towards the Intentus Report, stating:

> Applicant has requested a prior art search that is generally related to the claims presented herein. Specifically, the search report by the Intentus Group, dated March 30, 2020, which was provided on an Information Disclosure Statement (IDS) in this file history on April 6, 2020.

Ex. 2030 ['172 Prosecution-History] 272. The same Intentus Report was also submitted in an IDS during the '011's prosecution, and the Examiners again confirmed that they considered the Intentus Report. Ex. 1002 [Prosecution-History] 229-230.

The Intentus Report quoted two paragraphs in full from Levi that describe four of Levi's figures (paragraphs [0067] and [0085] discussing, *inter alia*, Figures 1, 3, 17 and 43). Ex. 2018 [Intentus] 4. The Levi publication's paragraphs [0067] and [0085] correspond to Levi at 9:45-51 and 13:62-14:14, respectively, and these sections, likewise discuss Levi's Figures 1, 3, 17, and 43.

The Levi portions quoted in the Intentus Report and considered by the Examiners are, moreover, precisely the same portions that Petitioner leans heavily upon here. Petitioner included four separate annotated images of Levi's Fig. 3, relying on it for, *inter alia*, the alleged "outer frame," "inner frame," "stitches," "fiber," "outer skirt," "distal end of prosthetic valve," and "distal end of frame":

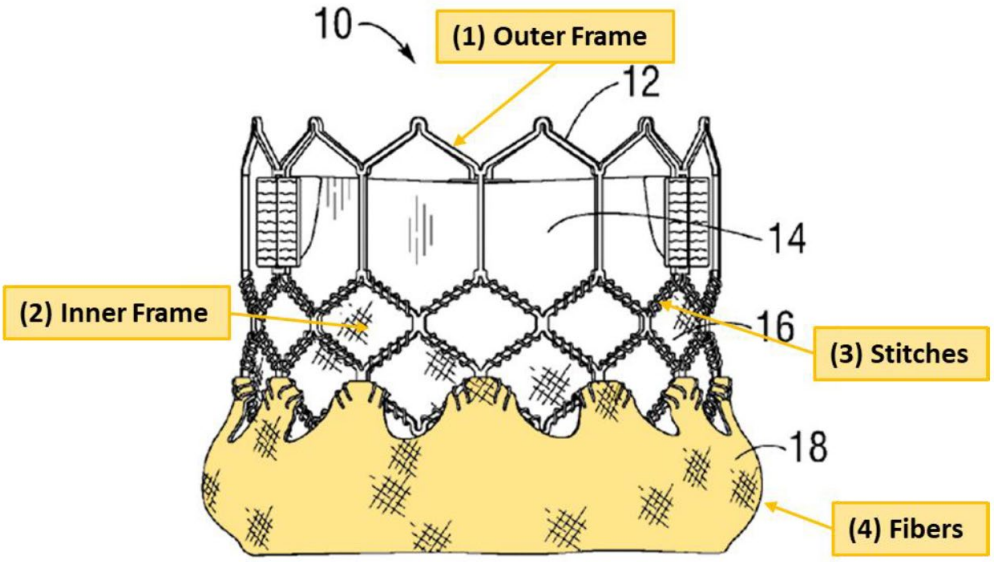

Pet., 16; 79 ("an outer skirt of woven PET fabric secured to the exterior surface of a frame"); 88-89 ("an outer skirt of woven PET fabric [yellow] secured to the exterior surface of the frame"); 98 ("distal end of prosthetic valve," "distal end of frame").

Levi's Figure 3, thus, is the foundation of Petitioner's argument under Levi and it was called out to the Examiners' attention. Similarly, paragraph 85 (*i.e.*, Levi, 13:62-14:14) is also heavily relied upon by Petitioner. *See, e.g.*, Pet., 16 (citing Levi, 13:62-66), 79 (citing 13:50-66), 89 (citing 13:62-14:2 and 14:3-7), 90 (citing 13:62-14:2), 104 (citing 13:62-14:2 and 14:3-7), 107 (citing 14:3-7). Because the Intentus Report directed the Examiners' attention towards the very Levi teachings relied upon by Petitioner, both Levi and Petitioner's arguments thereto were fully considered, and rejected, by the Examiners.

The same is true of Spenser II, the only other reference (aside from Levi) relied upon in Ground 8. In prosecution, the Applicant reproduced and distinguished Spenser II's Fig. 22 in its remarks:

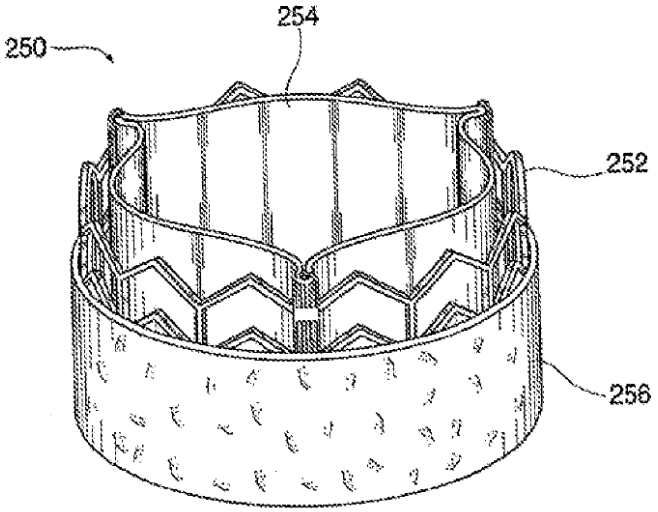

FIG. 22

Ex. 1002 [Prosecution-History] 212. Patent Owner further discussed and distinguished Spenser II in a response to the September 11, 2020 Notice of Allowance. *Id*. 117. Petitioner too concedes that Spenser II's Figure 22 was considered by the Examiner. Pet., 112. Nonetheless, Petitioner relies heavily upon Spenser II's Figure 22 and includes the image nine times in the Petition:

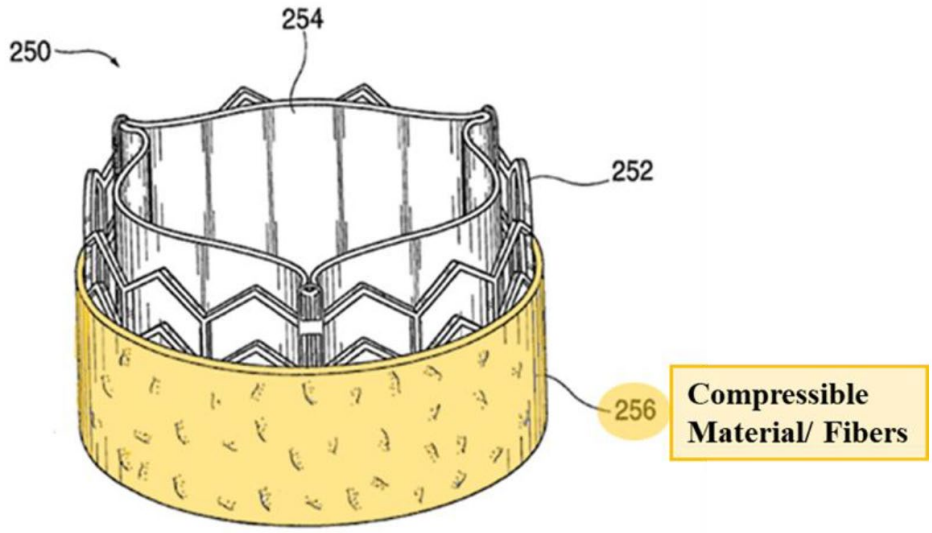

FIG. 22

Pet., 14, 26, 45, 48-50, 53, 69, 70. Indeed, the only Spenser II disclosure relied upon by Petitioner is Figure 22 and the associated discussion. *See* Pet., 14, 26, 45-46, 48-51, 53, 63, 69-70, 92, 93, 106, 110.

Thus, as to Grounds 5-6 (Levi) and 8 (Levi/Spenser II), the Examiners considered both Levi and Spenser II and also the very same disclosures in those references relied upon by Petitioner. Therefore, Petitioner applies the very same art and arguments previously presented to the Office, satisfying *Advanced Bionics*' first prong.

Despite this backdrop, Petitioner still contends that institution should not be denied under § 325(d) because "[t]he Examiner never addressed the combination of Spenser II with [] Levi." Pet., 112. This is misleading, as Patent Owner

expressly discussed both Levi and Spenser II in the very same set of remarks. Ex. 1002 [Prosecution-History] 117-118.

Petitioner also contends that Patent Owner's discussion of Spenser II and Levi during prosecution was incorrect and therefore, the "statements during prosecution should not form a basis to deny institution under § 325(d)." Pet., 112-113. Even if, *arguendo*, this were true, it would be irrelevant to *Advanced Bionics*' first prong which only requires a showing of whether the same or substantially the same art or arguments were presented to the Office. *Advanced Bionics*, 7-8. Here, there is no dispute that Spenser II and Levi was cited by Patent Owner and considered by the Examiners. Thus, the first prong of *Advanced Bionics* is satisfied. Moreover, Petitioner's assertion that Patent Owner made incorrect statements is without merit. Indeed, in Petitioner's cited Section VII.A.11 does not even argue that ***Spenser II*** teaches pressing its compressible material against the native leaflets, but instead relies on a combination of Spenser and Spenser II for this limitation. *See* Pet., 72-74. Similarly, cited Section VII.B.11 does not cite rely on any teaching in Levi for this limitation, and instead relies entirely on Dr. Buller's declaration, which does not address Patent Owner's prosecution statements regarding an outer seal with "an increased landing zone height that allows the valve to seal against the leaflets, as well as at the base of the leaflets."

Id., 107 (citing Ex. 1003 [Buller Decl.] ¶¶48-50, 334); Ex. 1002 [Prosecution-History] 117.

To show that the Examiners did not apply Levi and Spenser II, Petitioner cites *Comcast* for support. Pet., 113. But in *Comcast*, the applicant merely cited the reference in an IDS, without providing any discussion about it. *Comcast Cable Commc'ns LLC v. Promptu Sys. Corp.*, IPR2018-00342, Paper 13, 16 (PTAB July 19, 2018) (rejecting 325(d) argument where reference listed on IDS amongst 400 other references during reissuance proceedings and was not discussed therein). This scenario is very different from the present case, as in here the Patent Owner specifically named and discussed Spenser II and Levi in responses filed during prosecution. Accordingly, *Comcast* is inapplicable to the present case.

As for *Advanced Bionics*' second prong, it requires the petitioner to show that "the Office erred in a manner material to the patentability of challenged claims." *Advanced Bionics*, 8. Petitioner contends that Patent Owner's statements made during prosecution were "incorrect," and argues that as a result, the institution should not be denied under § 325(d). Pet., 112-113. But, as discussed, Petitioner fails to show that Patent Owner's statements were "incorrect" or that, even if they were, that caused any material error on the Examiners' part. Further, the Examiners issued the September 11, 2020 notice of allowance, and had already considered Levi and Spenser II, before the allegedly incorrect statement was made.

Ex. 1002 [Prosecution-History] 141-145. Petitioner does not explain how an allegedly incorrect statement could have caused a "material error" where the Examiners had already considered the art and issued a notice of allowance prior to the alleged misstatement. Pet., 112-113. Since Petitioner has not demonstrated any material error by the Office, *Advanced Bionics*' second prong is also satisfied. Accordingly, Grounds 5-6 and 8 should be dismissed under § 325(d).

B. Cribier '321, Walther, And Spenser Are Substantially Similar To Levi And Spenser II (Grounds 1-4, 7, And 9-14).

Grounds 1-4, 7, and 9-14 similarly raise art and arguments that were either presented to the Office or are substantially similar to art/arguments previously presented.

Ground	Combination
1	Spenser + Walther
2	Spenser + Spenser II
3	Cribier '321 + Walther
4	Cribier '321 + Spenser II
7	Levi + Walther
9	Levi + Cribier '321
10	Levi + Spenser
11	Levi + Cribier '321 + Walther
12	Levi + Cribier '321 + Spenser II
13	Levi + Spenser + Walther
14	Levi + Spenser + Spenser II

Nine of these eleven grounds raise Levi, Spenser II or both. What is more, in these grounds, Petitioner relies upon the very same aspects of Levi and Spenser II that were specifically brought to the Examiners' attention.

In Grounds 2, 4, 12, and 14, Petitioner relies upon Spenser II's Figure 22 and the corresponding description as providing the alleged "sealing material." *See* Pet., 26, 38, 44-46 (grounds 2 and 4), 48-50, 52-53, 68-70, 77, 79, 92-94 (grounds 12 and 14), 108. Spenser II's Figure 22 was, again, expressly brought to the Examiners' attention. Ex. 1002 [Prosecution-History] 212. Petitioner relies upon Levi's Figure 3 in Grounds 7 and 9-14 for teaching an outer frame. Pet., 79-80. Levi's Figure 3 was, likewise, brought to the Examiners' attention in prosecution. *See* Section V.A, *Supra*.

The portions of Cribier '321, Walther, and Spenser relied upon by Petitioner are, likewise, substantially similar to the very portions of Levi and Spenser II specifically brought to the Examiners' attention. As an initial matter, each of Levi, Cribier '321, Walther and Spenser are related to SAPIEN valves. Ex. 2022 [FDA P200015] 26 (identifying Levi as covering SAPIEN 3); Ex. 1007 [Walther] 1 ("[t]he current valve-in-valve study is focused on the use of an ***Edwards SAPIEN***™ trans-catheter heart valve (THV) ..."); Ex. 2027 [FDA P140031C] 29 (identifying Spenser and Cribier '321 in connection with Sapien 3); Ex. 2028 [FDA P100041C] 8 (identifying Spenser and Cribier '321 as covering Sapien); *see*

also Ex. 2029 [FDA P110021C] 8, 29. The family resemblance can be seen below by comparing Levi's Figure 3 (which was brought to the Examiners' attention) and the Figures in Cribier '321, Walther and Spenser relied upon by Petitioner:

Levi's Figure 3 Is Similar To Cribier '321, Spenser, & Walther	
Levi's Figure 3	**Key Spenser, Walther, & Cribier '321 Figures Relied Upon By Petitioner**
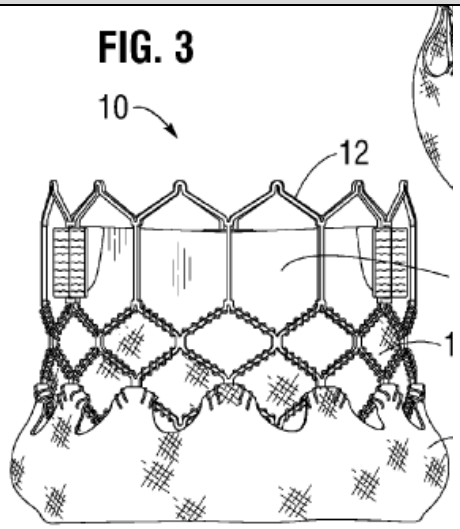 Levi, Fig. 3	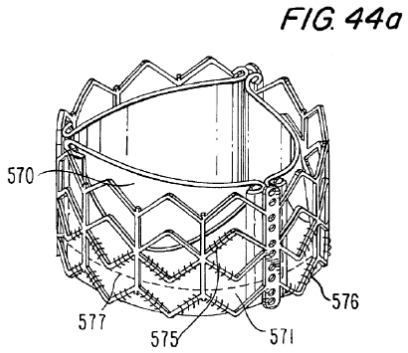 Spenser, Fig. 44a

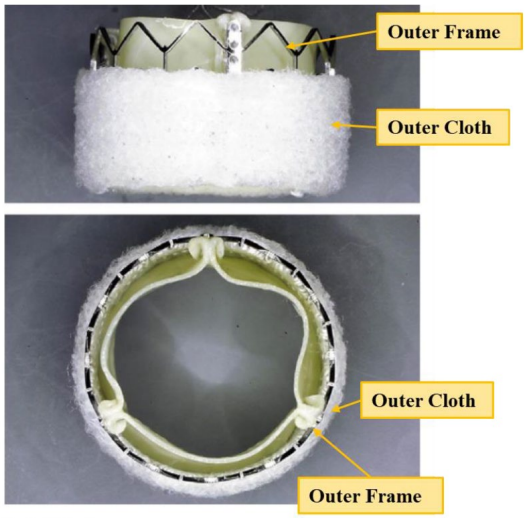

Fig. 1. Cloth valve.

Walther, Fig. 1

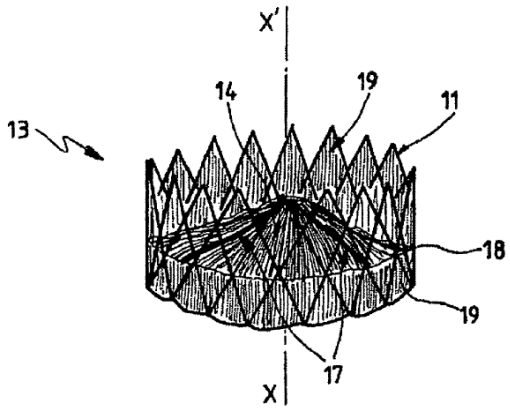

FIG_5a

Cribier '321, Fig. 5a.

What is more, the figures from Levi and Spenser II previously considered by the Examiners are very similar to Cribier ’321, Spenser, and Walther on a limitation-by-limitation basis. Petitioner relies upon Cribier ’321, Spenser, and Levi for teaching the outer frame. *See, e.g.*, Pet., 24-25, 27-28, 75, 79-81, 108. Levi’s outer frame is substantially similar to Cribier ’321’s and Spenser’s alleged outer frames:

Levi’s Fig. 3	Cribier ’321’s Fig. 2a, Fig. 5a	Spenser’s Fig. 44a
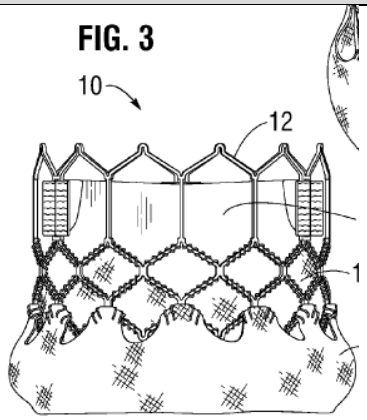	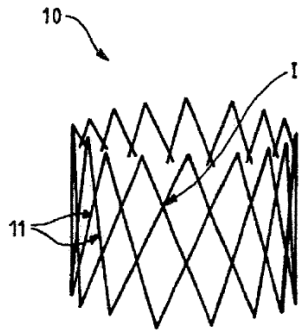 FIG_2a 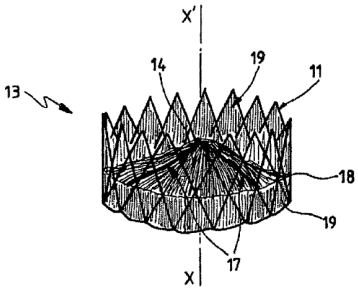 FIG_5a	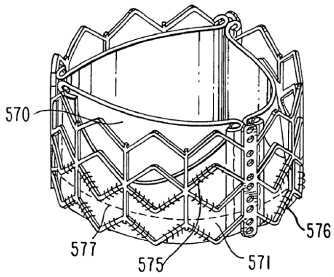

Ex. 1008 [Levi] 6:31-35 (disclosing metal frame); Ex. 1045 [Cribier ’321] 9:27-28 (same); Ex. 1010 [Spenser] 12:28-31 (same). Petitioner does not identify any

material distinction between Levi's outer frame and those in Cribier '321 or Spenser and, instead, acknowledges the similarities. *See* Pet., 40 (Arguing Walther, Spenser, and Cribier '321 "describe similar heart valves …. The valves ***comprise balloon-expandable, metallic, gridded frames*** having an inner PET graft covering that is attached to prosthetic leaflets"), 93 ("The valve frames in Walther, Spenser II, and Levi ***share many common features*** …").

Petitioner also relies upon Cribier '321, Spenser, and Levi for teaching the inner frame. *See, e.g.*, Pet. 29-32, 75-76, 81-82, 108. Petitioner further argues that Cribier '321, Spenser, and Levi teach the extending graft covering. *See, e.g.* Pet., 34-38, 77-78, 84-88, 108. As shown below, Levi's inner skirt 16 (the alleged "inner frame") is similar to Cribier '321's (internal cover 19) and Spenser's (PET layer 571) alleged inner frames for the purpose of this analysis. In particular, they all contain a rolled up region where the alleged "inner frame" extends into and covers the proximal end and the external wall of the outer frame.

Levi's Figs. 2, 20	Cribier '321's Fig. 6d, Fig. 5a	Spenser's Figs. 2, 44
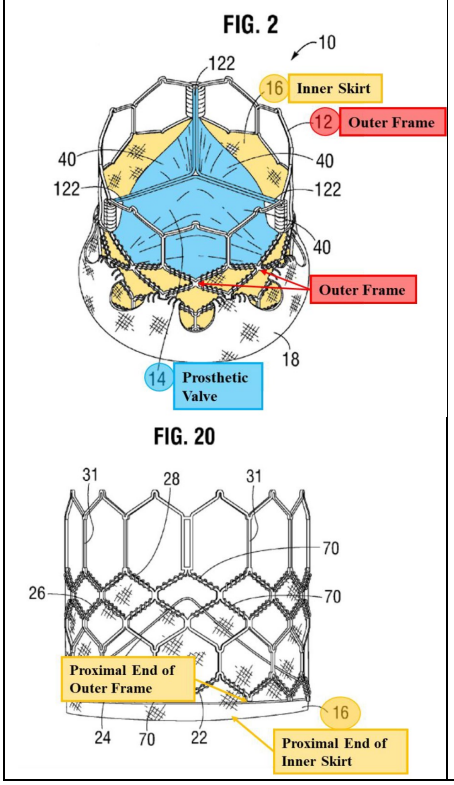	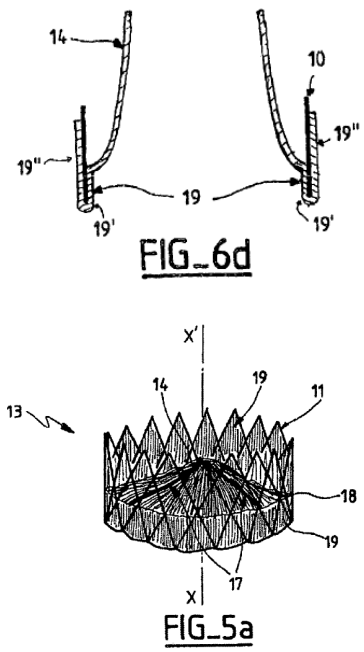	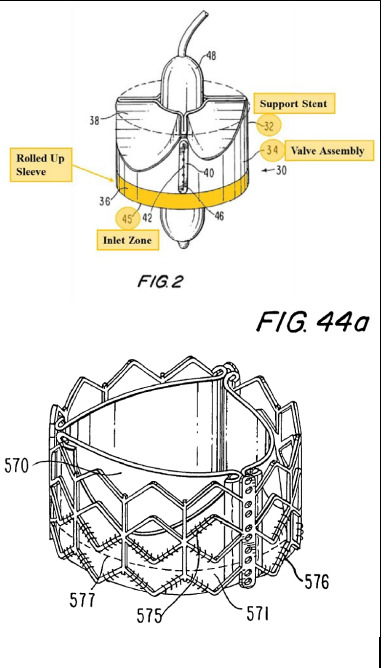

Ex. 1008 [Levi] 9:11-14 (inner skirt made of PET); Ex. 1045 [Cribier '321] 5:15-17 (disclosing valvular tissue made of DACRON®, a type of PET), 13:13-16 (disclosing internal cover (19) made with the same tissue as the valvular structure); Ex. 1010 [Spenser] 26:30-54 (disclosing PET layer 571). Petitioner does not identify any distinction between Levi's inner skirt and those in Cribier '321 or Spenser.

Petitioner also relies upon Cribier '321, Spenser, and Levi for teaching the outer frame stitched to graft covering. *See, e.g.* Pet., 32-34, 76, 83, 108. As shown

in the following table, Levi's sutures 70 (the alleged "stitches") are essentially identical to Spenser's stitches.

Levi's Fig. 20	Spenser's Fig. 44a
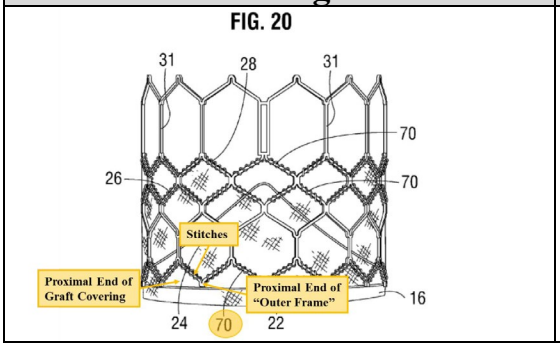	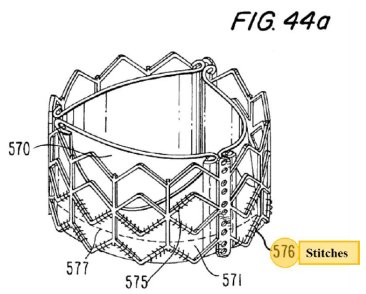

Cribier '321 likewise discloses that the valvular structure (which includes internal cover 19) can be fasted to the bars by sewing. Ex. 1045 [Cribier '321] 13:54-56 (disclosing that the valvular structure can be fastened to the bars by sewing); 12:28-31. Petitioner identifies no distinction between Levi's sutures and those in Cribier '321 or Spenser.

Petitioner relies upon Walther, Spenser II, and Levi for teaching the sealing material. *See, e.g.* Pet., 38-46, 77, 88-94, 108. Petitioner further relies upon Walther, Spenser II, and Levi for teaching the fibers cover[ing] two rows [of grids]. *See, e.g.* Pet., 46-50, 77-78, 94-96, 109-111. As shown in the following table, Spenser II's compressible material 256 (the alleged "sealing material") is essentially identical to Walther's outer cloth in both the configuration and the material, as they both cover a portion of the outer frame.

Spenser II's Fig. 22	Walther's Fig. 1
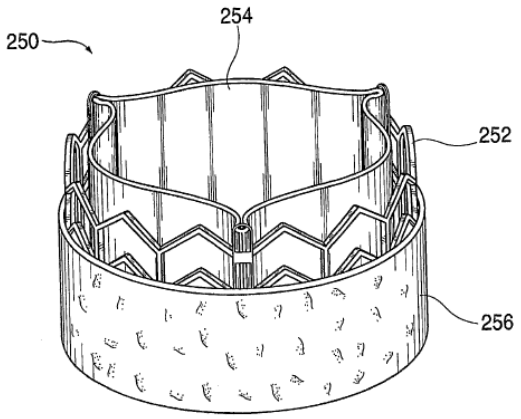 FIG. 22	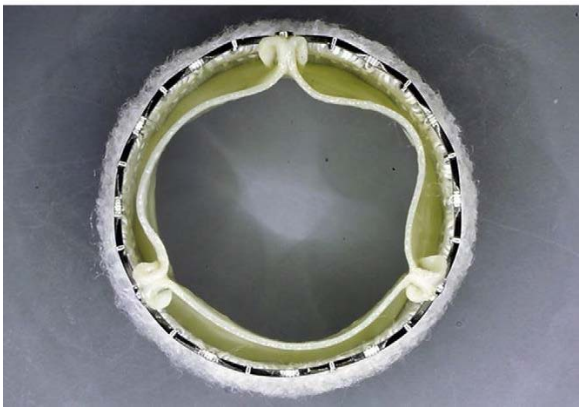

Ex. 1011 [Spenser II] ¶145 (disclosing outer cloth made of PET); Ex. 1007 [Walther] 2 (same). Petitioner, again, does not identify any distinction between Spenser II's compressible material and Walther's outer cloth and instead describes the two as "similar[]." Pet., 26.

Petitioner relies upon Cribier '321, Spenser, and Levi for teaching the balloon expandable [valve/frame]. *See, e.g.* Pet., 50-51, 79, 96, 111. Petitioner further argues that the effect of "sealing material presses against leaflets" is achievable by a combination of "Spenser or Cribier '321 [] with Walther or Spenser II," or by Levi or a combination of Levi with Walther or Spenser II. *See, e.g.* Pet., 72-74, 79, 107, 111. As shown in the following table, Levi discloses a

balloon expanding mechanism that is essentially identical to Spenser's or Cribier '321's balloon expanding mechanism.

Levi's Fig. 74	Cribier '321's Fig. 13h	Spenser's Fig. 4
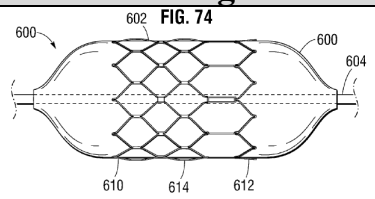	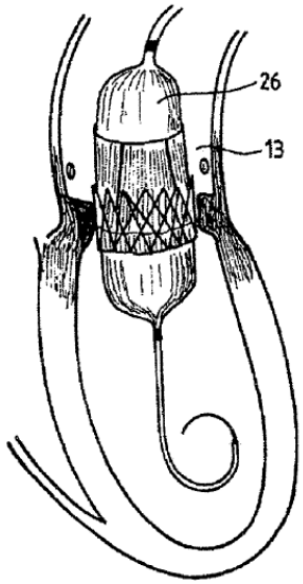 FIG_13h	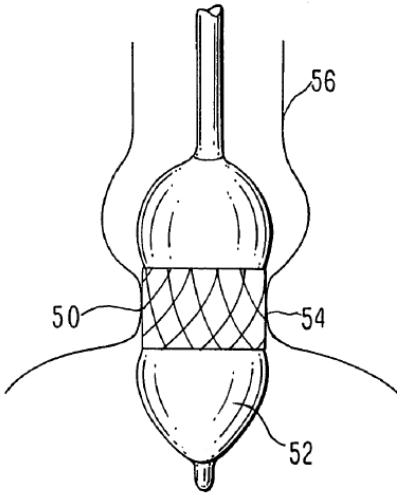

Ex. 1008 [Levi] 20:37-21:4 (disclosing expanding the frame by a balloon); Ex. 1045 [Cribier '321] 18:44-19:6 (same); Ex. 1010 [Spenser] 14:15-20 (same). Petitioner does not identify any distinction between Levi's balloon expanding mechanism and Cribier '321's or Spenser's balloon expanding mechanism.

Petitioner states that the Board should not deny institution under § 325(d) simply because "Spenser, Walther, and Cribier '321 were not cited during prosecution of the '011 patent." Pet., 112. But *Advanced Bionics* asks "whether the same or ***substantially the same*** art or arguments were presented to the Office."

As shown above, Cribier '321, Walther, and Spenser teach are substantially similar to Levi and Spenser II on a limitation-by-limitation basis, including on the very same features of Levi and Spenser II called out to the Examiners' attention, and Petitioner fails to point to any material difference between the references. *Becton, Dickinson*, 21 (denying institution under 325(d) where structural differences were not meaningful). Petitioner fails to identify any material difference between the newly cited references (Cribier '321, Walther, Spenser) and the previously presented references (Levi, Spenser II). Consequently, *Advanced Bionics*' first prong is satisfied.

Because Petitioner notes that Cribier '321, Walther, and Spenser were not cited during prosecution (Pet., 112) but does not address whether those references are "substantially similar" to Levi and Spenser II, Petitioner does not even attempt to show any "material error" on the Examiner's part as to Grounds 1-4, 7, and 9-14. To the extent such an argument hinges upon Levi or Spenser II not being considered, that argument too fails for the reasons given in Section V.A. Consequently, *Advanced Bionics*' second prong is also satisfied and, thus, Grounds 1-4, 7, and 9-14 should also be dismissed under 325(d).

VI. PETITIONER FAILS TO DEMONSTRATE THAT WALTHER WAS PUBLICLY ACCESSIBLE (GROUNDS 1, 3, 7, 11, 13 ALL CLAIMS).

Petitioner asserts Walther as printed publication prior art but fails to demonstrate that it was publicly available. Petitioner's entire argument consists of a simple conclusory assertion that Walther was "published on April 3, 2011." Petitioner provides no librarian declaration or other supporting evidence, and no explanation for its conclusory assertion. The Precedential Opinion Panel has explained that "at the institution stage, ***the petition must identify, with particularity, evidence sufficient to establish a reasonable likelihood that the reference was publicly accessible*** before the critical date of the challenged patent and therefore that there is a reasonable likelihood that it qualifies as a printed publication." *Hulu, LLC v. Sound View Innovations, LLC*, IPR2018-01039, Paper 29, 13 (PTAB Dec. 20, 2019) (precedential) ("*Hulu*"); *see also Medtronic, Inc. v. Barry*, 891 F.3d 1368, 1380 (Fed. Cir. 2018) (The petitioner in an IPR "bears the burden of establishing that a ***particular document*** is a printed publication."). Petitioner has not come close to meeting this burden. Consequently, Petitioner has failed to demonstrate that Walther is available as prior art.

Petitioner contends that the '011's priority date is November 7, 2012, Pet., 23, but fails to demonstrate that Walther qualifies as a "printed publication" as of

that date. The Petition's entire statement concerning the status of this references as prior art is below:

> **B. <u>The Asserted References Are Prior Art</u>**
>
> The Critical Date of the '011 patent is November 7, 2012. (*Supra* §III.C.) The below references are prior art under pre-AIA 35 U.S.C. §102(b):
>
> (1) Spenser (Ex. 1010) issued on March 31, 2009;
>
> (2) Walther (Ex. 1007) published on April 3, 2011;

Id. Petitioner offers no explanation of or evidence in support of its assertions that Walther was "published on April 3, 2011." Petitioner did not submit any evidence substantiating Petitioner's assertion that either reference was "published" prior to the '011's alleged critical date. *Id*., 23, Table of Exhibits.

Further, nothing in either of the references states that they were "published" on those dates. While the first page in Walther states "[a]vailable online 3 April 2011," nothing in the document lists the URL of where Walther was allegedly available online, or provides any indication that Walther was available "to the extent that persons interested and ordinarily skilled in the subject matter or art exercising reasonable diligence, can locate it." *SRI Int'l, Inc. v. Internet Sec. Sys., Inc*., 511 F.3d 1186, 1194 (Fed. Cir. 2008).

Indeed, as the Board and the Federal Circuit have confirmed, that a reference "available online," is not itself sufficient to establish the reference as printed publication prior art. *Blue Calypso, LLC v. Groupon, Inc.*, 815 F.3d 1331, 1349-50 (Fed. Cir. 2016) (reference not shown to be prior art as "[e]ven if [the reference] was available online on Dr. Ratsimor's personal page … the present case lacks any testimonial evidence that a person interested in e-commerce and peer-to-peer marketing would be independently aware of the web address for Dr. Ratsimor's personal page."); *Google LLC v. IPA Techs. Inc.*, IPR2018-00475, Paper 7, 14-15 (July 20, 2018) ("even if we were to assume that Cheyer was available online (i.e., technical availability), Petitioner fails to point to any persuasive evidence of public accessibility to the document or the SRI website.").

The Board has routinely denied institution due to a petitioner's failure to demonstrate a reference was publicly accessible. For example, in *Victoria's Secret Stores LLC v. Andra Group, LP*, the Board looked at the following argument, presented in the petition, to see if it met the petitioner's burden to prove that the reference ("Vertex") was available as prior art:

> The Vertex reference is an October 24, 1996 press release from Business Wire entitled "The Vertex Opens Virtual Doors as VRML Forum; VRML 2.0 Users Exchange Ideas and Original Models Online." (E[x.] 1038.) The Vertex publication bears a copyright symbol indicating copyright protection via authorship accrued in 1996. (Id.)

> Accordingly, the Vertex reference is prior art under §102(b) (pre-AIA). ([Weadock Decl. ¶ 101].)

IPR2020-00853, Paper 12, 22 (PTAB Oct. 22, 2020). The Board in *Victoria's Secret* found that this argument did not "satisf[y] the standard set forth in *Hulu* as to the alleged public accessibility" of the reference. *Id*., 26. In particular, the Board noted that "the Petition did not include *any* additional evidence supporting Petitioner's implicit position that Vertex was publicly accessible prior to the critical date of the claimed invention." *Id*., 24 (emphasis in original).

The instant Petition is even more defective in this regard than the petition in *Victoria's Secret*. The Petition does not cite ***any*** evidence nor any supporting explanation. Accordingly, Petitioner has failed to demonstrate that Walther is available as prior art. As a result, the Board should not institute review based on Grounds 1, 3, 7, 11, or 13.

VII. DISCLAIMED CLAIMS 1-6 AND 8-11 SHOULD BE TREATED AS THOUGH THEY NEVER EXISTED AND MAY NOT BE A BASIS FOR INSTITUTION UNDER 37 C.F.R. § 42.107(E).

To streamline this proceeding, and in compliance with 37 C.F.R. § 1.321(a), Patent Owner has filed a statutory disclaimer under 35 U.S.C. § 253(a) of claims 1-6 and 8-11 of the '011 patent (the "Disclaimed Claims"). Ex. 2011 [Disclaimer]. To avoid any doubt, this disclaimer is not a request for adverse judgment. Rather, and as a matter of law, claims 1-6 and 8-11, should be treated as though they never

existed. *Baker Hughes v. LiquidPower Specialty Prods., Inc*., IPR2016-01903, Paper 74, 11-12 (PTAB Mar. 8, 2019) (citing Federal Circuit precedents); *Intel Corp. v. VLSI Technology LLC*, IPR2018-01040, Paper 36, 16 (PTAB Feb. 12, 2020) (similar). Additionally, under the Office's rules, "[n]o *inter partes* review will be instituted based on disclaimed claims." 37 C.F.R. § 42.107(e).

VIII. CONCLUSION

The Petition should be denied.

Respectfully submitted,

/Kenneth J. Weatherwax/

Kenneth J. Weatherwax, Reg. No. 54,528
Nathan N. Lowenstein (*pro hac vice* admission request pending filing)
Lowenstein & Weatherwax LLP
Date: January 10, 2022

CERTIFICATE OF COMPLIANCE WITH TYPE-VOLUME LIMITS

This Patent Owner Preliminary Response (the "POPR") consists of 13,892 words, excluding table of contents, table of authorities, certificate of service, this certificate, or table of exhibits. The POPR complies with the type-volume limitation of 14,000 words as mandated in 37 C.F.R. § 42.24. In preparing this certificate, counsel has relied on the word count of the word-processing system used to prepare the paper (Microsoft Word).

Respectfully submitted,

/Patrick Maloney/

Date: January 10, 2022

CERTIFICATE OF SERVICE

The undersigned hereby certifies that the following documents were served by electronic service, by agreement between the parties, on January 10, 2022:

PATENT OWNER AORTIC INNOVATIONS LLC'S PRELIMINARY RESPONSE TO PETITION FOR INTER PARTES REVIEW OF UNITED STATES PATENT NO. 10,857,011 PURSUANT TO 35 U.S.C. § 313, 37 C.F.R. § 42.107

EXHIBITS 2002-2032

The names and address of the parties being served are as follows:

Craig S. Summers	2css@knobbe.com
Joshua J. Stowell	2jys@knobbe.com
Brian C. Barnes	2bcb@knobbe.com
	BoxEdwards20-1@knobbe.com
	BoxEdwards20-2@knobbe.com

Respectfully submitted,

/Patrick Maloney/

Date: January 10, 2022

From:	PTABE2E_System@uspto.gov
To:	2css; 2Jys; maloney@lowensteinweatherwax.com; weatherwax@lowensteinweatherwax.com
Cc:	Brian.Barnes
Subject:	IPR2021-01584: PO Preliminary Response Filed - Edwards Lifesciences Corp. v. Aortic Innovations LLC
Date:	Monday, January 10, 2022 4:56:21 PM

UNITED STATES PATENT AND TRADEMARK OFFICE
PATENT TRIAL AND APPEAL BOARD

PO Preliminary Response Filed Notice

AIA Review No.:	IPR2021-01584
Petitioner:	Edwards Lifesciences Corp. et al.
Patent Owner:	Aortic Innovations LLC of Hillsboro Beach, FL
Patent No.:	10857011
Submitted Date:	01/10/2022
Submitted By:	Kenneth Weatherwax, weatherwax@lowensteinweatherwax.com

Patent Owner's Preliminary Response has been filed.

Questions regarding this receipt should be directed to the Patent Trial and Appeal Board at 571-272-7822 or e-mail to Trials@uspto.gov.

This e-mail is computer-generated. Do not reply to this e-mail because the e-mail box is not monitored.