US005102417A

United States Patent [19]

Palmaz

[11] **Patent Number: 5,102,417**

[45] **Date of Patent: Apr. 7, 1992**

[54] **EXPANDABLE INTRALUMINAL GRAFT, AND METHOD AND APPARATUS FOR IMPLANTING AN EXPANDABLE INTRALUMINAL GRAFT**

[75] Inventor: **Julio C. Palmaz**, San Antonio, Tex.

[73] Assignee: **Expandable Grafts Partnership**, San Antonio, Tex.

[21] Appl. No.: **174,246**

[22] Filed: **Mar. 28, 1988**

Related U.S. Application Data

[63] Continuation-in-part of Ser. No. 923,798, Nov. 3, 1986, Pat. No. 4,739,762, which is a continuation-in-part of Ser. No. 796,009, Nov. 7, 1985, Pat. No. 4,733,665.

[51] **Int. Cl.**[5] **A61M 5/00**; A61F 2/02

[52] **U.S. Cl.** **606/195**; 604/8; 604/96; 604/282; 623/11

[58] **Field of Search** 128/343, 344; 604/93, 604/49, 282, 343, 97, 8, 283; 623/1, 12, 11; 606/191-195, 108

[56] **References Cited**

U.S. PATENT DOCUMENTS

3,599,641	8/1971	Sheridan	604/283
3,968,800	7/1976	Vilasi	128/343.
4,076,285	2/1978	Martinez	604/242
4,503,569	3/1985	Dotter	128/343
4,553,545	11/1985	Maass et al.	128/341
4,676,241	6/1987	Webb et al.	604/283
4,731,054	3/1988	Billeter et al.	604/93
4,733,665	3/1980	Palmaz	128/343
4,739,762	4/1988	Palmaz	128/343

FOREIGN PATENT DOCUMENTS

1205743	9/1970	United Kingdom	128/343
2135585	9/1984	United Kingdom	128/343

OTHER PUBLICATIONS

"Self-Expanding Endovascular Graft: An Experimental Study in Dogs"; Yoshioka et al., AJR 151: 673-679, Oct. 1988.

"Expandable Intralumiral Graft: A Preliminary Study" Radiology, Jul. 1985 Paper Presented at 70th Scientific Assembly and Annual Meeting of the Radiological Society of North America, Nov. 25, 1984, by Jolio C. Palmaz et al.

"Transluminally-Placed Coilspring Endarterial Tube Grafts"; Dotter Investigative Radiology; Sep.-Oct. 1969.

"Non Surgical Placement of Arterial Endoprostheses: A New Technique Using Nitirol wire"; Cragg et al., Radiology 147, 1983.

Tetsuya Yoshioka et al., "Self-Expanding Endovascular Graft: An Experimental Study in Dogs", ASR 151: 673-676, Oct. 1988.

Primary Examiner—C. Fred Rosenbaum
Assistant Examiner—Mark Bockelman
Attorney, Agent, or Firm—Ben D. Tobor

[57] **ABSTRACT**

A plurality of expandable and deformable intraluminal vascular grafts are expanded within a blood vessel by an angioplasty balloon associated with a catheter to dilate and expand the lumen of a blood vessel. The grafts may be thin-walled tubular members having a plurality of slots disposed substantially parallel to the longitudinal axis of the tubular members, and adjacent grafts are flexibly connected by at least one connector member.

36 Claims, 3 Drawing Sheets

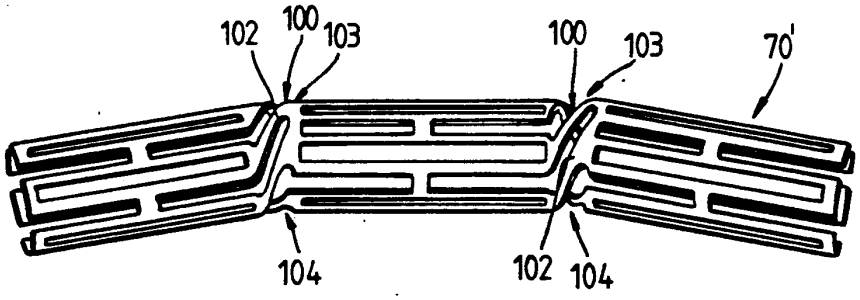

Edwards v. Aortic Innovations
U.S. Patent 11,497,634
Edwards Ex. 1127

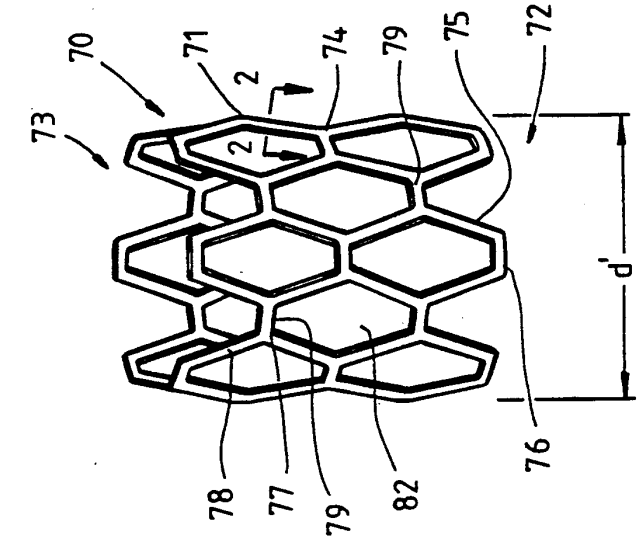

FIG.1B

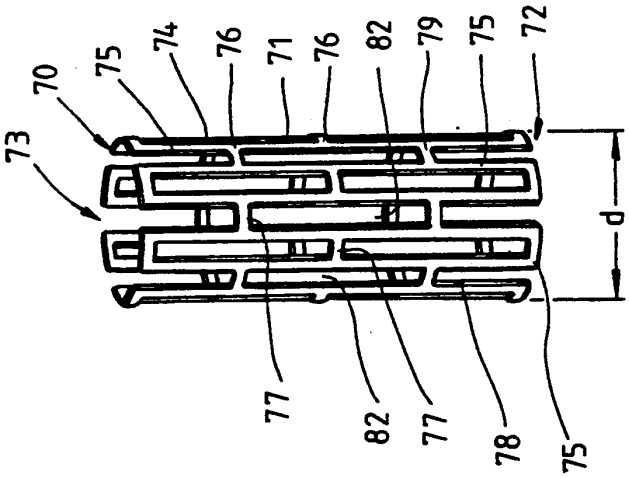

FIG.1A

FIG.2

FIG.3

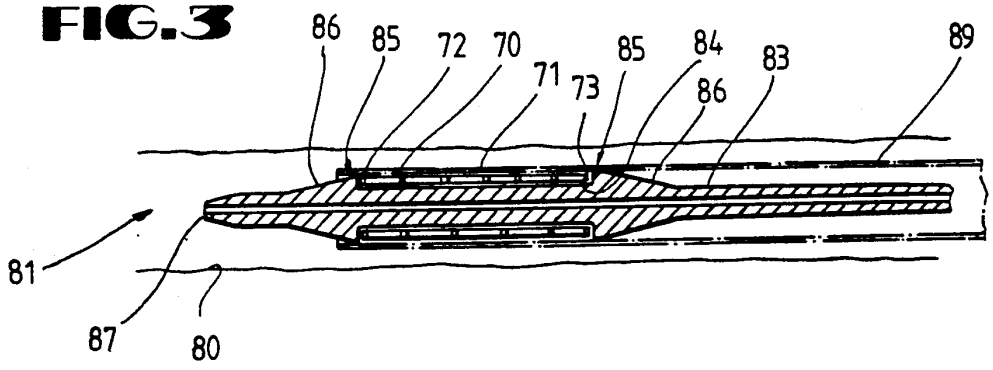

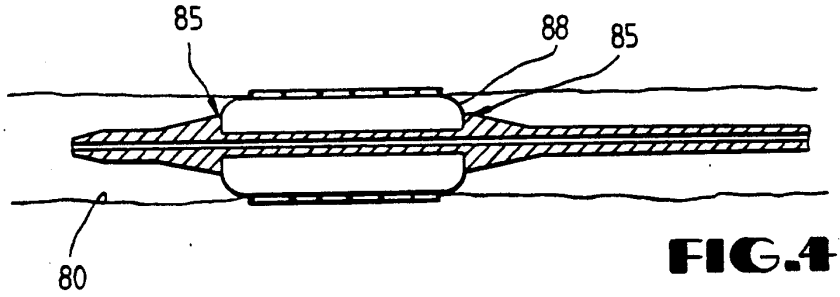

FIG.4

FIG.5

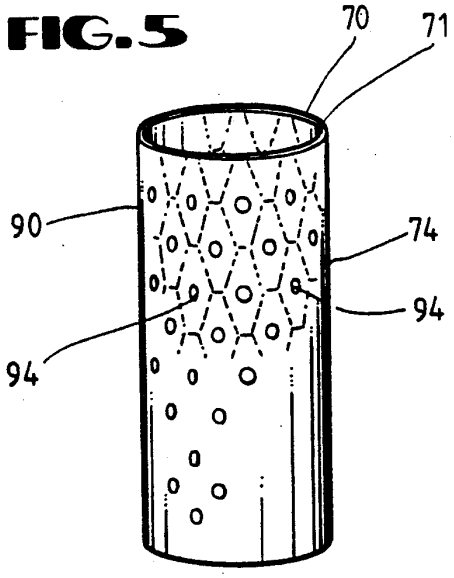

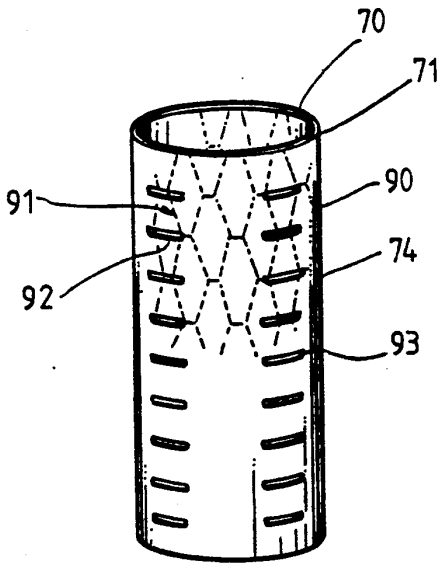

FIG.6

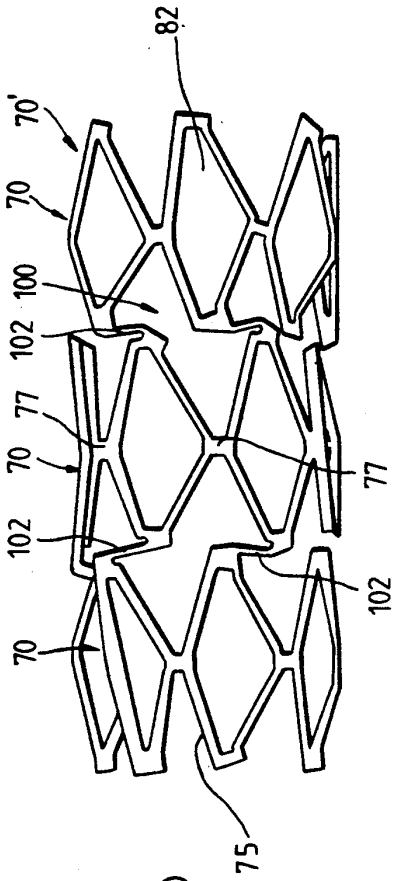

FIG.10

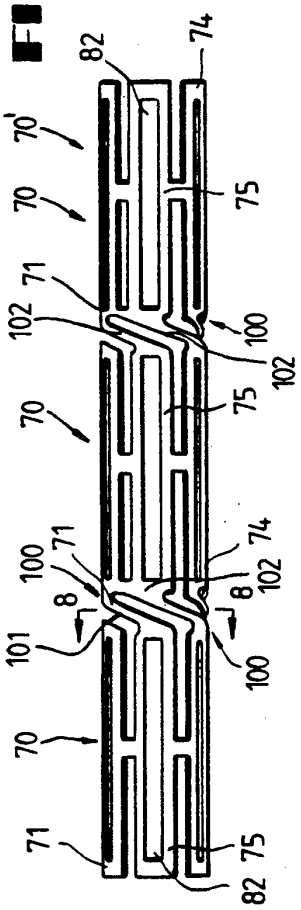

FIG.7

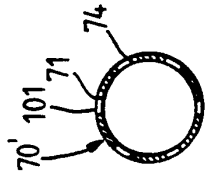

FIG.8

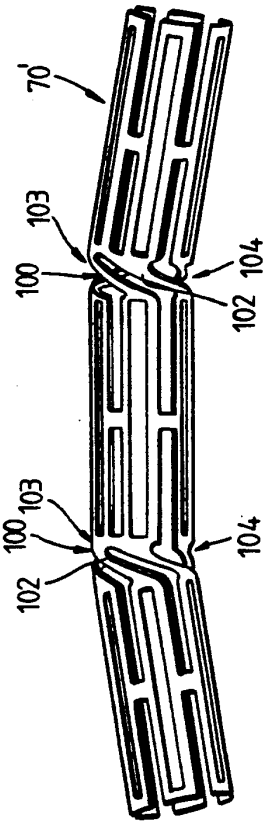

FIG.9

EXPANDABLE INTRALUMINAL GRAFT, AND METHOD AND APPARATUS FOR IMPLANTING AN EXPANDABLE INTRALUMINAL GRAFT

RELATED APPLICATION

This application is a continuation-in-part application of Applicant's co-pending application, Ser. No. 923,798 now U.S. Pat. No. 4,739,762, filed Nov. 3, 1986, which application is a continuation-in-part of Applicant's co-pending application, Ser. No. 06,796,009 now U.S. Pat. No. 4,733,665 filed Nov. 7, 1985, entitled Expandable Intraluminal Graft, and Method and Apparatus for Implanting an Expandable Intraluminal Graft.

FIELD OF THE INVENTION

The invention relates to an expandable intraluminal graft for use within a body passageway or duct and, more particularly, expandable intraluminal vascular grafts which are particularly useful for repairing blood vessels narrowed or occluded by disease; and a method and apparatus for implanting expandable intraluminal grafts.

DESCRIPTION OF THE PRIOR ART

Intraluminal endovascular grafting has been demonstrated by experimentation to present a possible alternative to conventional vascular surgery. Intraluminal endovascular grafting involves the percutaneous insertion into a blood vessel of a tubular prosthetic graft and its delivery via a catheter to the desired location within the vascular system. Advantages of this method over conventional vascular surgery include obviating the need for surgically exposing, incising, removing, replacing, or bypassing the defective blood vessel.

Structures which have previously been used as intraluminal vascular grafts have included coiled stainless steel springs; helically wound coil springs manufactured from an expandable heat-sensitive material; and expanding stainless steel stents formed of stainless steel wire in a zig-zag pattern. In general, the foregoing structures have one major disadvantage in common. Insofar as these structures must be delivered to the desired location within a given body passageway in a collapsed state, in order to pass through the body passageway, there is no effective control over the final, expanded configuration of each structure. For example, the expansion of a particular coiled spring-type graft is predetermined by the spring constant and modulus of elasticity of the particular material utilized to manufacture the coiled spring structure. These same factors predetermine the amount of expansion of collapsed stents formed of stainless steel wire in a zig-zag pattern. In the case of intraluminal grafts, or prostheses, formed of a heat sensitive material which expands upon heating, the amount of expansion is likewise predetermined by the heat expansion characteristics of the particular alloy utilized in the manufacture of the intraluminal graft.

Thus, once the foregoing types of intraluminal grafts are expanded at the desired location within a body passageway, such as within an artery or vein, the expanded size of the graft cannot be changed. If the diameter of the desired body passageway has been miscalculated, an undersized graft might not expand enough to contact the interior surface of the body passageway, so as to be secured thereto. It may then migrate away from the desired location within the body passageway. Likewise, an oversized graft might expand to such an extent that

the spring force, or expansion force, exerted by the graft upon the body passageway could cause rupturing of the body passageway. Further, the constant outwardly radiating force exerted upon the interior surface of the body passageway can cause erosion of the internal surface, or intima, of the artery or body passageway.

Another alternative to conventional vascular surgery has been percutaneous balloon dilation of elastic vascular stenoses, or blockages, through use of a catheter mounted angioplasty balloon. In this procedure, the angioplasty balloon is inflated within the stenosed vessel, or body passageway, in order to shear and disrupt the wall components of the vessel to obtain an enlarged lumen. With respect to arterial atheroscleerotic lesions, the relatively incompressible plaque remains unaltered, while the more elastic medial and adventitial layers of the body passageway stretch around the plaque. This process produces dissection, or a splitting and tearing, of the body passageway wall layers, wherein the intima, or internal surface of the artery or body passageway, suffers fissuring. This dissection forms a "flap" of underlying tissue which may reduce the blood flow through the lumen, or block the lumen. Typically, the distending intraluminal pressure within the body passageway can hold the disrupted layer or flap, in place. If the intimal flap created by the balloon dilation procedure is not maintained in place against the expanded intima, the intimal flap can fold down into the lumen and close off the lumen, or may even become detached and enter the body passageway. When the intimal flap closes off the body passageway, immediate surgery is necessary to correct this problem.

Although the balloon dilation procedure is typically conducted in the catheterization lab of a hospital, because of the foregoing problem, it is always necessary to have a surgeon on call should the intimal flap block the blood vessel or body passageway. Further, because of the possibility of the intimal flap tearing away from the blood vessel and blocking the lumen, balloon dilations cannot be performed upon certain critical body passageways, such as the left main coronary artery, which leads into the heart. If an intimal flap formed by a balloon dilation procedure abruptly comes down and closes off a critical body passageway, such as the left main coronary artery, the patient could die before any surgical procedures could be performed.

Additional disadvantages associated with balloon dilation of elastic vascular stenoses is that many fail because of elastic recoil of the stenotic lesion. This usually occurs due to a high fibrocollagenous content in the lesion and is sometimes due to certain mechanical characteristics of the area to be dilated. Thus, although the body passageway may initially be successfully expanded by a balloon dilation procedure, subsequent, early restenosis can occur due to the recoil of the body passageway wall which decreases the size of the previously expanded lumen of the body passageway. For example, stenoses of the renal artery at the ostium are known to be refractory to balloon dilation because the dilating forces are applied to the aortic wall rather than to the renal artery itself. Vascular stenoses caused by neointimal fibrosis, such as those seen in dialysis-access fistulas, have proved to be difficult to dilate, requiring high dilating pressures and larger balloon diameters. Similar difficulties have been observed in angioplasties of graft-artery anastomotic strictures and postendarterectomy recurrent stenoses. Percutaneous angioplasty

of Takayasu arteritis and neurofibromatosis arterial stenoses may show poor initial response and recurrence which is believed due to the fibrotic nature of these lesions.

For repairing blood vessels narrowed or occluded by disease, or repairing other body passageways, the length of the body passageway which requires repair, as by the insertion of a tubular prosthetic graft, may present problems if the length of the required graft cannot negotiate the curves or bends of the body passageway through which the graft is passed by the catheter. In other words, in many instances, it is necessary to support a length of tissue within a body passageway by a graft, wherein the length of the required graft exceeds the length of a graft which can be readily delivered via a catheter to the desired location within the vascular system. Some grafts do not have the requisite ability to bend so as to negotiate the curves and bends present within the vascular system, particularly prostheses or grafts which are relatively rigid and resist bending with respect to their longitudinal axes.

Accordingly, prior to the development of the present invention, there has been no expandable intraluminal vascular graft, and method and apparatus for expanding the lumen of a body passageway, which: prevents recurrence of stenoses in the body passageway; can be utilized for critical body passageways, such as the left main coronary artery of a patient's heart; prevents recoil of the body passageway wall; allows the intraluminal graft to be expanded to a variable size to prevent migration of the graft away from the desired location and prevents rupturing and/or erosion of the body passageway by the expanded graft; permits tissue of an elongated section of a body passageway to be supported by an elongated graft; and provides the necessary flexibility to negotiate the bends and curves in the vascular system. Therefore, the art has sought an expandable intraluminal vascular graft, and method and apparatus for expanding the lumen of a body passageway which: prevents recurrence of stenoses in the body passageway; is believed to be able to be utilized in critical body passageways, such as the left main coronary artery of the heart; prevents recoil of the body passageway can be expanded to a variable size within the body passageway to prevent migration of the graft away from the desired location; and to prevent rupturing and/or erosion of the body passageway by the expanded graft; permits tissue of an elongated section of a body passageway to be supported by an elongated graft; and provides the necessary flexibility to negotiate the bends and curves in the vascular system.

SUMMARY OF THE INVENTION

In accordance with the invention the foregoing advantages have been achieved through the present expandable intraluminal vascular graft. The present invention includes a plurality of thin-walled tubular members having first and second ends and a wall surface disposed between the first and second ends, the walls surface having a substantially uniform thickness and a plurality of slots formed therein, the slots being disposed substantially parallel to the longitudinal axis of the tubular member; at least one connector member being disposed between adjacent tubular members to flexibly connect adjacent tubular members; each tubular member having a first diameter which permits intraluminal delivery of the thin-walled tubular members into a body passageway having a lumen; and the tubular members having a second, expanded diameter, upon the application from the interior of the tubular members of a radially, outwardly extending force, which second diameter is variable and dependent upon the amount of force applied to the tubular members, whereby the tubular shaped members may be expanded and deformed to expand the lumen of the body passageway.

A further feature of the present invention is that at least one connector member may be disposed in a non-parallel relationship with respect to the longitudinal axis of the tubular members. Another feature of the present invention is that the at least one connector member may be disposed coplanar with each tubular member and non-parallel to the longitudinal axis of the tubular members. An additional feature of the present invention is that at least one connector member may be a thin-walled, spiral member, coplanar with adjacent tubular members.

In accordance with the invention, the foregoing advantages have also been achieved through the present method for implanting a plurality of prostheses within a body passageway. The method of the present invention comprises the steps of: disposing at least one connector member between adjacent prostheses to flexibly connect adjacent prostheses to each other; disposing a plurality of connected prostheses upon a catheter; inserting the prostheses and catheter within the body passageway by catheterization of the body passageway; and providing controllable expansion of at least one of the prostheses at a desired location within the body passageway by expanding a portion of the catheter associated with the prostheses to force at least one of the prostheses radially outwardly into contact with the body passageway, by deforming a portion of the at least one prostheses with a force in excess of the elastic limit of the portion of the at least one prostheses, to implant the prostheses within the body passageway.

A further feature of the present invention is that the portion of the catheter in contact with the prostheses may be collapsed, and the catheter removed from the body passageway. A further feature of the present invention is that a catheter having an expandable, inflatable portion associated therewith may be utilized; and expansion of the prostheses and the portion of the catheter is accomplished by inflating the expandable, inflatable portion of the catheter.

A further feature of the present invention is that a thin-walled tubular member may be utilized as each prosthesis, each tubular member having a plurality of slots formed therein, the slots being disposed substantially parallel to the longitudinal axis of the tubular member. Another feature of the present invention is that the slots may be uniformly and circumferentially spaced from adjacent slots and the slots may be uniformly spaced from adjacent slots along the longitudinal axis of each tubular member, whereby at least one elongate member is formed between adjacent slots.

Another feature of the present invention is that the at least one connector member may be disposed in a non-parallel relationship with respect to the longitudinal axis of adjacent prostheses. A further feature of the present invention is that the at least one connector member may be disposed coplanar with each tubular member and non-parallel to the longitudinal axis of the tubular member. A further feature of the present invention is that the at least one connector member may be formed as a thin-walled, spiral member, coplanar with adjacent tubular members.

In accordance with the invention, the foregoing advantages have also been achieved through the present apparatus for intraluminally reinforcing a body passageway. The present invention includes: a plurality of expandable and deformable, thin-walled tubular prostheses, each prosthesis having first and second ends and a wall surface disposed between the first and second ends, the wall surface having a plurality of slots formed therein, the slots being disposed substantially parallel to the longitudinal axes of the prostheses, at least one connector member being disposed between adjacent tubular members to flexibly connect adjacent tubular members; and a catheter, having an expandable, inflatable portion associated therewith and including means for mounting and retaining the expandable and deformable tubular prostheses on the expandable, inflatable portion, whereby upon inflation of the expandable, inflatable portion of the catheter, the prostheses are expanded and deformed radially outwardly into contact with the body passageway. A further feature of the present invention is that the mounting and retaining means may comprise a retainer ring member disposed on the catheter adjacent the expandable, inflatable portion and adjacent each end of the expandable and deformable tubular prostheses.

The expandable intraluminal vascular graft, method for implanting a plurality of prostheses within a body passageway, and apparatus for intraluminally reinforcing a body passageway of the present invention, when compared with previously proposed prior art intraluminal grafts, methods for implanting them, and balloon dilation techniques have the advantages of: preventing recurrence of stenoses; is believed to permit implantation of grafts in critical body passageways, such as in the left main coronary artery of the heart; prevents recoil of the body passageway; prevents erosion of the body passageway by the expanded graft; permits expansion of the graft to a variable size dependent upon conditions within the body passageway; permits tissue of an elongated section of a body passageway to be supported by an elongated graft; and provides the necessary flexibility to negotiate the bends and curves in the vascular system.

BRIEF DESCRIPTION OF THE DRAWINGS

In the drawings:

FIG. **1A** is a perspective view of an expandable intraluminal vascular graft, or prosthesis for a body passageway, having a first diameter which permits delivery of the graft, or prosthesis, into a body passageway;

FIG. **1B** is a perspective view of the graft, or prosthesis, of FIG. **1A**, in its expanded configuration when disposed within a body passageway;

FIG. **2** is a cross-sectional view of the prosthesis taken along line **2—2** of FIG. **1B**;

FIG. **3** is a cross-sectional view of an apparatus for intraluminally reinforcing a body passageway, or for expanding the lumen of a body passageway, illustrating a prosthesis, or intraluminal vascular graft, in the configuration shown in FIG. **1A**;

FIG. **4** is a cross-sectional view of the apparatus for intraluminally reinforcing a body passageway, or for expanding the lumen of a body passageway, with the graft, or prosthesis, in the configurations shown in FIG. **1B**;

FIGS. **5** and **6** are perspective views of prostheses for a body passageway, with the grafts, or prostheses, having a coating thereon;

FIG. **7** is a front view of another embodiment of a graft or prosthesis in accordance with the present invention;

FIG. **8** is a cross-sectional view of the graft, taken along line **8—8** of FIG. **7**.

FIG. **9** is a perspective view of the graft of FIG. **7**, wherein the graft has been bent or articulated; and

FIG. **10** is a perspective view of the graft of FIG. **7**, after the graft has been expanded and deformed.

While the invention will be described in connection with the preferred embodiment, it will be understood that it is not intended to limit the invention to that embodiment. On the contrary, it is intended to cover all alternatives, modifications, and equivalents, as may be included within the spirit and scope of the invention as defined by the appended claims.

DETAILED DESCRIPTION OF THE INVENTION

In FIGS. **1A** and **1B**, an expandable intraluminal vascular graft, or expandable prosthesis for a body passageway, **70** is illustrated. It should be understood that the terms "expandable intraluminal vascular graft" and "expandable prosthesis" are interchangeably used to some extent in describing the present invention, insofar as the methods, apparatus, and structures of the present invention may be utilized not only in connection with an expandable intraluminal vascular graft for expanding partially occluded segments of a blood vessel, or body passageway, but may also be utilized for many other purposes as an expandable prosthesis for many other types of body passageways. For example, expandable prostheses **70** may also be used for such purposes as: (1) supportive graft placement within blocked arteries opened by transluminal recanalization, but which are likely to collapse in the absence of an internal support; (2) similar use following catheter passage through mediastinal and other veins occluded by inoperable cancers; (3) reinforcement of catheter created intrahepatic communications between portal and hepatic veins in patients suffering from portal hypertension; (4) supportive graft placement of narrowing of the esophagus, the intestine, the ureters, the urethra; and (5) supportive graft reinforcement of reopened and previously obstructed bile ducts. Accordingly, use of the term "prosthesis" encompasses the foregoing usages within various types of body passageways, and the use of the term "intraluminal vascular graft" encompasses use for expanding the lumen of a body passageway. Further, in this regard, the term "body passageway" encompasses any duct within the human body, such as those previously described, as well as any vein, artery, or blood vessel within the human vascular system.

Still with reference to FIGS. **1A** and **1B**, the expandable intraluminal vascular graft, or prosthesis, **70** is shown to generally comprise a tubular member **71** having first and second ends **72**, **73** and a wall surface **74** disposed between the first and second ends **72**, **73**. Tubular member **71** has a first diameter, d, which, to be hereinafter described in greater detail, permits intraluminal delivery of the tubular member **71** into a body passageway **80** having a lumen **81** (FIG. **3**). With reference to FIG. **1B**, upon the application from the interior of the tubular member **71** of a radially, outwardly extending force, to be hereinafter described in greater detail tubular member **71** has a second, expanded diameter, d', which second diameter d' is variable in size and

dependent upon the amount of force applied to deform the tubular member **71**.

Tubular member **71**, may be any suitable material which is compatible with the human body and the bodily fluids (not shown) with which the vascular graft, or prosthesis, **70** may come into contact. Tubular member **71** must also be made of a material which has the requisite strength and elasticity characteristics to permit the tubular member **71** to be expanded and deformed from the configuration shown in FIG. **1A** to the configuration shown illustrated in FIG. **1B** and further to permit the tubular member **71** to retain its expanded and deformed configuration with the enlarged diameter d' shown in FIG. **1B** and resist radial collapse. Suitable materials for the fabrication of tubular member **71** would include silver, tantalum, stainless steel, gold, titanium or any suitable plastic material having the requisite characteristics previously described.

Preferably, tubular member **71** is initially a thin-walled stainless steel tube having a uniform wall thickness, and a plurality of slots **82** are formed in the wall surface **74** of tubular member **71**. As seen in FIG. **1A** when tubular member **71** has the first diameter d, the slots **82** are disposed substantially parallel to the longitudinal axis of the tubular member **71**. As seen in FIG. **1A**, the slots **82** are preferably uniformly and circumferentially spaced from adjacent slots **82**, as by connecting members **77**, which connecting members **77** preferably have a length equal to the width of slots **82**, as seen in FIG. **1A**. Slots **82** are further uniformly spaced from adjacent slots **82** along the longitudinal axis of the tubular member **71**, which spacing is preferably equal to the width of connecting members **77**. Thus, the formation of slots **82** results in at least one elongate member **75** being formed between adjacent slots **82**, elongate member **75** extending between the first and second ends, **72**, **73** of tubular member **71**, as seen in FIG. **1A**.

Still with reference to FIG. **1A**, each slot will have first and second ends with a connecting member **77** disposed at the first and second ends of slots **82**. Preferably, the first and second ends of each slot **82** are disposed intermediate the first and second ends of adjacent slots **82** along the longitudinal axis of the tubular member **71**. Thus, connecting members **77**, which are disposed at the first and second ends of each slot **82**, and between elongate members **75**, will in turn be disposed intermediate the first and second ends of adjacent slots **82** along the longitudinal axis of the tubular member **71**. Accordingly, slots **82** are preferably uniformly and circumferentially spaced from adjacent slots, and slots **82** adjacent to one another along the longitudinal axis of tubular member **71** are in a staggered relationship with one another. Alternating slots disposed about the circumference of tubular member **71** at both the first and second ends **72**, **73** of tubular member **71** will only have a length equal to approximately one-half of the length of a complete slot **82**, such half-slot **82** being bounded by members **78**, **79**, at both the first and second ends **72**, **73** of tubular member **71**. Although the graft, or prosthesis, **70** of FIGS. **1A** and **1B** is illustrated to have a length approximately equal to the length of two slots **82**, it should be apparent that the length of the graft **70** could be made longer or shorter as desired.

The foregoing described construction of graft, or prosthesis, **70** permits graft, or prosthesis, **70** to be expanded uniformly, and outwardly, in a controlled manner into the configuration shown in FIG. **1B**, upon the application of a suitable force from the interior of tubular member **71**, as will be hereinafter described in greater detail. The expansion of tubular member **71** into the configuration shown in FIG. **1B** is further uniform along the length of tubular member **71**, not only because of the uniform spacing between slots **82**, as previously described, but also because the thickness of the wall surface **74**, or the thickness of connecting members **77**, elongate members **75**, and members **78**, **79**, is the same uniform thickness. As illustrated in FIG. **2**, the uniform thickness of elongate member **75** is shown, and the preferred cross-sectional configuration of elongate member **75**, connecting member **77**, and members **78**, **79**, is illustrated, which configuration is rectangular. It should of course be understood by those skilled in the art, that the cross-sectional configuration of the foregoing components of graft, or prosthesis, **70** could also be square. As will be hereinafter described in greater detail, it is preferable that the outer surface **74** of graft, or prothesis, **70**, which would be in contact with the body passageway **80** FIG. **4**), should be relatively smooth.

With reference to FIG. **1B**, it is seen that after the graft, or prosthesis **70**, has been expanded and deformed into the configuration of FIG. **1B**, the slots **82** will assume a substantially hexagonal configuration when the tubular member **71** has the second, expanded diameter, d', as shown in FIG. **1B**. Such a hexagonal configuration will result when the slots **82** initially have a substantially rectangular configuration when the tubular member **71** has the first diameter, d, illustrated in FIG. **1A**. It should be noted that were the width of slots **82** to be substantially reduced, whereby the length of connecting member **77** would approximate a single point intersection, the expansion of such a tubular member **71** would result in slots **82** assuming a configuration which would be substantially a parallelogram (not shown).

It should be noted that not only is tubular member **71** expanded from the configuration shown in FIG. **1A** to achieve the configuration shown in FIG. **1B**, but tubular member **71** is further "deformed" to achieve that configuration. By use of the term "deformed" is meant that the material from which graft, or prothesis, **70** is manufactured is subjected to a force which is greater than the elastic limit of the material utilized to make tubular member **71**. Accordingly, the force is sufficient to permanently bend elongate members **75** whereby segments of the elongate members **75** pivot about connecting members **77** and move in a circumferential direction as they pivot, whereby the diameter of the tubular member **71** increases from the first diameter, d, to the expanded diameter, d', of FIG. **1B**. The force to be applied to expand tubular member **71**, which is applied in the manner which will be hereinafter described in greater detail, must thus be sufficient to not only expand tubular member **71**, but also to deform elongate member **75**, in the manner previously described, whereby the portions of the elongate members **75** which pivot about the ends of connecting members **77** do not "spring back" and assume their configuration shown in FIG. **1A**, but rather retain the configuration thereof in FIG. **1B**. Once graft, or prothesis, **70** has been expanded and deformed into the configuration shown in FIG. **1B**, graft, or prothesis **70**, will serve to prevent a body passageway from collapsing as will be hereinafter described in greater detail. It should be noted that when tubular member **71** has the first diameter, d, shown in FIG. **1A**, or after tubular member **71** has been expanded and deformed into the second, expanded diameter, d', of FIG. **1B**, tubular member **71** does not exert any out-

ward, radial force, in that tubular member **71** is not a "spring-like" or "self-expanding member", which would tend to exert an outwardly radial force.

With reference now to FIGS. **3** and **4**, the methods and apparatus of the present invention will be described in greater detail. Once again, it should be understood that the methods and apparatus of the present invention are useful not only for expanding the lumen of a body passageway, such as an artery, vein, or blood vessel of the human vascular system, but are also useful to perform the previously described procedures to intraluminally reinforce other body passageways or ducts, as previously described. Still with reference to FIGS. **3** and **4**, an expandable intraluminal vascular graft, or prosthesis, **70**, of the type described in connection with FIGS. **1A** and **1B**, is disposed or mounted upon a catheter **83**. Catheter **83** has an expandable, inflatable portion **84** associated therewith. Catheter **83** includes means for mounting and retaining **85** the expandable intraluminal vascular graft, or prosthesis, **70** on the expandable, inflatable portion **84** of catheter **83**. Preferably, the mounting and retaining means **85** comprises retainer ring members **86** disposed on the catheter **83** adjacent the expandable inflatable portion **84** of catheter **83**; and a retainer ring member **86** is disposed adjacent each end **72**, **73** of the expandable intraluminal vascular graft, or prosthesis, **70**. Preferably, as seen in FIG. **3**, retainer ring members are formed integral with catheter **83**, and the retainer ring member **86** adjacent the leading tip **87** of catheter **83** slopes upwardly and away from catheter tip **87** in order to protect and retain graft or prosthesis, **70** as it is inserted into the lumen **81** of body passageway **80**, as to be hereinafter described in greater detail. The remaining retainer ring member **86** as shown in FIG. **3**, slopes downwardly away from tip **87** of catheter **83**, to insure easy removal of catheter **83** from body passageway **80**. After expandable intraluminal graft, or prosthesis, **70** has been disposed upon catheter **83**, in the manner previously described, the graft, or prosthesis, **70** and catheter **83** are inserted within a body passageway **80** by catheterization of the body passageway **80** in a conventional manner.

In a conventional manner, the catheter **83** and graft, or prosthesis, **70** are delivered to the desired location within the body passageway **80**, whereat it is desired to expand the lumen **81** of body passageway **80** via intraluminal graft **70**, or where it is desired to implant prosthesis **70**. Fluoroscopy, and/or other conventional techniques may be utilized to insure that the catheter **83** and graft, or prosthesis, **70** are delivered to the desired location within the body passageway. Prosthesis, or graft, **70** is then controllably expanded and deformed by controllably expanding the expandable, inflatable portion **84** of catheter **83**, whereby the prosthesis, or graft, **70** is expanded and deformed radially, outwardly into contact with the body passageway **80**, as shown in FIG. **4**. In this regard, the expandable, inflatable portion of catheter **83** may be a conventional angioplasty balloon **88**. After the desired expansion and deformation of prosthesis, or graft, **70** has been accomplished, angioplasty balloon **88** may be collapsed, or deflated, and the catheter **83** may be removed in a conventional manner from body passageway **80**. If desired, as seen in FIG. **3**, catheter **83**, having graft or prosthesis, **70** disposed thereon, may be initially encased in a conventional Teflon TM sheath **89**, which is pulled away from prosthesis, or graft, **70**, prior to expansion of the prosthesis, or graft, **70**.

Still with reference to FIGS. **3** and **4**, it should be noted that tubular member **71** of prosthesis, or graft, **70** initially has the first predetermined, collapsed diameter, d, as described in connection with FIG. **1A**, in order to permit the insertion of the tubular member, **71** into the body passageway **80** as previously described. When it is desired to implant prosthesis **70** within a body passageway **80** for the purposes previously described, the prosthesis **70** is, controllably expanded and deformed to the second diameter, d', and the second, expanded diameter, d', is variable and determined by the internal diameter of the body passageway **80**, as shown in FIG. **4**, and by the amount of expansion of the inflatable portion **84** of catheter **83**. Accordingly, the expanded and deformed prosthesis **70**, upon deflation of angioplasty balloon **88** will not be able to migrate from the desired location within the body passageway **80**, nor will the expansion of the prosthesis **70** be likely to cause a rupture of the body passageway **80**. Furthermore, insofar as prosthesis, or graft, **70** is not a "spring-like" or "self-expanding member", the prosthesis is not consistently applying an outward, radial force against the interior surface of body passageway **80**, in excess of that required to resist radial callapse of the body passageway **80**. Thus, erosion of the interior surface, or intima, of the artery or body passageway is prevented.

When it is desired to use expandable intraluminal graft **70** to expand the lumen **81** of a body passageway **80** having an area of stenosis, the expansion of intraluminal vascular graft **70** by angioplasty balloon **88**, allows controlled dilation of the stenotic area and, at the same time controlled expansion and deformation of the vascular graft **70**, whereby vascular graft **70** prevents the body passageway **80** from collapsing and decreasing the size of the previously expanded lumen **81**. Once again, the second, expanded diameter d' of intraluminal vascular graft **70**, as shown in FIG. **4**, is variable and determined by the desired expanded internal diameter of body passageway **80**. Thus, the expandable intraluminal graft **70** will not migrate away from the desired location within the body passageway **80** upon deflation of angioplasty balloon **88**, nor will the expansion of intraluminal graft **70** likely cause a rupture of body passageway **80**, nor any erosion as previously described. Further, should an intimal flap, or fissure, be formed in body passageway **80** at the location of graft **70**, graft **70** will insure that such an intimal flap will not be able to fold inwardly into body passageway **80**, nor tear loose and flow through body passageway **80**. In the situation of utilizing graft **70** in the manner previously described to expand the lumen of a portion of a critical body passageway, such as the left main coronary artery, it is believed that the intimal flap will be unable to occlude the left main coronary artery of the heart and cause the death of the patient.

Because it is only necessary to inflate angioplasty balloon **88** one time in order to expand and deform graft **70**, it is believed that a greater amount of endothelium, or inner layer of the intima, or inner surface of the body passageway, will be preserved, insofar as the extent of endothelial denudation during transluminal angioplasty is proportional to the balloon inflation time. Further, in theory, the amount of preserved endothelium should be large because in the expanded configuration of graft **70**, potentially 80% of the endothelium is exposed through the openings or expanded slots **82** of graft **70**. It is further believed that intact patches of endothelium within expanded slots **82** of graft **70** may result in a rapid,

multicentric endothelialization pattern as shown by experimental studies.

With reference now to FIGS. **5** and **6**, prostheses, or grafts, **70** of the type previously described in connection with FIGS. **1A** and **1B** are shown, and the tubular members **71** of grafts, or prostheses, **70** have a biologically inert or biologically compatible coating **90** placed upon wall surfaces **74** of tubular shaped members **71**. Examples of a suitable biologically inert coating would be porous polyurethane, Teflon TM, or other conventional biologically inert plastic materials. The coating **90** should be thin and highly elastic so as not to interfere with the desired expansion and deformation of prosthesis, or graft, **70**. Coating **90** may be further provided with a means for anchoring **91** (FIG. **6**) the tubular member **71** to the body passageway **80**. Anchoring means **91** may be comprised of a plurality of radially, outwardly extending projections **92** formed on the coating **90**. As seen in FIG. **6**, the radially outwardly extending projections **92** could comprise a plurality of ridges **93**, or other types of radially, outwardly extending projections. Further, it may be desirable to have a plurality of openings **94** formed in coating **90**, as shown in FIG. **5**, whereby the fluid contained in body passageway **80** can be in direct contact with the dilated, or expanded, body passageway area. Examples of biologically compatible coatings **90** would include coatings made of absorbable polymers such as those used to manufcture absorbable sutures. Such absorbable polymers include polyglycoides, polylacoides, and copolymers thereof. Such absorbable polymers could also contain various types of drugs, whereby as the coating **90** is absorbed, or dissolves, the drug would be slowly released into the body passageway **80**.

Turning now to FIGS. **7–10**, an expandable intraluminal vascular graft, or prosthesis, **70'** is shown for implantation in curved body passageways **80**, or for use in elongated sections of body passageway **80**, when a prosthesis, or graft, **70'** is required which is longer than the grafts, or prostheses, **70** of FIG. **1A**. Identical reference numerals are used throughout FIGS. **7–10** for elements which are the same in design, construction, and operation, as those previously described in connection with FIGS. **1A–6**, and primed reference numerals are used for elements which are similar in construction, design, and operation, as those previously described in connection with FIGS. **1A–6**.

As seen in FIG. **7**, graft, or prosthesis, **70'** generally includes a plurality of prostheses, or grafts **70** as described previously in connection with FIGS. **1A**, **1B**, and **2**. Preferably, the length of each graft, or prosthesis, **70** is approximately the length of one slot **82**; however, the length of each graft **70** could be approximately equal to the length of two slots **82**, as illustrated in FIG. **1A**. Disposed between adjacent tubular members, **71**, or adjacent grafts, or prostheses, **70**, is at least one connector member **100** to flexibly connect adjacent tubular members **71**, or grafts, or prostheses, **70**. Connector member, or members, **100** are preferably formed of the same materials as grafts **70**, as previously described, and connector members **100** may be formed integrally between adjacent grafts **70**, or tubular members, **71** as shown in FIG. **7**. As seen in FIG. **8**, the cross-sectional configuration of connector member, or members, **100**, along the longitudinal axis of graft, or prosthesis **70'**, is the same, in that connector member, or members, **100** have the same uniform wall thickness of elongate members **75**. Of course, it should be readily apparent to one of ordinary skill in the art, that the thickness of connector members **100** could alternatively be smaller than that of elongate members **75**; however, it is preferable that the outer circumferential surface **101** of connector members **100** lies in the same plane formed by the wall surface **74** of grafts, or prostheses **70**, as seen in FIG. **8**.

Still with reference to FIGS. **7–8**, connector members **100** are preferably disposed in a non-parallel relationship with respect to the longitudinal axis of adjacent grafts, or prostheses, **70**. Further, it is preferable that the at least one connector member **100** is formed as a thin-walled spiral member **102** which is coplanar with the outer wall surface **74** of the adjacent tubular members **71**, or adjacent grafts, or prostheses, **70**. It should be noted that although graft, or prosthesis, **70'** is illustrated as including three grafts, or prostheses, **70** flexibly connected to one another by connector members **100**, as few as two grafts **70** could be connected to form graft, or prosthesis, **70'**. Furthermore, many grafts **70** could be flexibly connected by connector members **100** as are desired to form graft, or prosthesis, **70'**.

The delivery and expansion of graft or prosthesis, **70'** is the same as that previously described in connection with FIGS. **1A**, **1B**, and **3–4**. The length of the expandable, inflatable portion **84** of catheter **83** would be sized to conform with the length of graft, or prosthesis, **70**,, as should be readily apparent to one of ordinary skill in the art. Except for the length of the expandable, inflatable portion **84** of catheter **83**, the method of delivery of graft, or prosthesis, **70'** and its subsequent, controllable expansion and deformation is the same as previously described.

With reference to FIG. **9**, the prosthesis **70'** is illustrated in the configuration it would assume when being delivered to the desired location within the body passageway **80** and the graft, or prosthesis, **70'** is disposed upon catheter **83** and is passing through a curved portion of body passageway **80**, such as an arterial bend. For clarity, catheter **83** is not shown in FIG. **9**, since the flexibility of such catheters **83** is well known in the art. As seen in FIG. **9**, because of the disposition of flexible connector members **100** between adjacent tubular members **71**, or grafts, or prostheses, **70**, graft, or prosthesis, **70'** is able to flexibly bend, or articulate, with respect to the longitudinal axis of graft, or prosthesis, **70'**, so as to be able to negotiate the curves or bends found in body passageways **80**. As seen in FIG. **9**, as graft, or prosthesis, **70'** bends, or articulates about the longitudinal axis of graft **70'**, the spacing between tubular members **71** increases, or expands, about the outer side of the curve, or bend, **103**; and the spacing decreases, or is compressed, on the inner side of the curve, or bend, **104**. Likewise, spiral connector members **102** adjacent the outer side of the curve **103** flexibly and resiliently stretch to permit the expansion of the spacing thereat; and the spiral connector members **102** adjacent the inner side of the curve, **104** flexibly and resiliently compress to permit the decrease in the spacing between tubular members **71** on the inner side of curve **104**. It should be noted that connector members **100** permit the bending, or articulation, of adjacent tubular members **71** in any direction about the longitudinal axis of graft, or prosthesis, **70'**.

Turning now to FIG. **10**, graft, or prosthesis, **70'** is illustrated in its expanded, and deformed configuration, similar to that illustrated in FIG. **1B**. It should be noted that should it be desired to implant graft, or prosthesis, **70'** on a curved portion of a body passageway **80**, such

implantation and expansion would be permitted by the connector members **100**. It should also be noted that prostheses, or grafts, **70** could be flexibly connected to one another to form a graft, or prosthesis, **70'** wherein such grafts, or prostheses, **70** are formed as wire mesh tubes of the type illustrated in Applicant's co-pending application, Ser. No. 06/796,009, filed Nov. 7, 1985, entitled, "Expandable Intraluminal Graft, and Method and Apparatus for Implanting an Expandable Intraluminal Graft", which application is incorporated by reference herein.

It is to be understood that the invention is not limited to the exact details of construction, operation, exact materials, or embodiments shown and described, as obvious modifications and equivalents will be apparent to one skilled in the art. Accordingly, the invention is therefore to be limited only by the scope of the appended claims.

What is claimed is:

1. A method for implanting a plurality of prostheses within a body passageway comprising the steps of:

disposing at least one connector member between adjacent prostheses to flexibly connect adjacent prostheses to each other;

disposing the plurality of connected prostheses upon a catheter;

inserting the prostheses and catheter within the body passageway by catheterization of said body passageway; and

providing controllable expansion of at least one of the prostheses at a desired location within the body passageway by expanding a portion of the catheter associated with the prostheses to force at least one of the prostheses radially outwardly into contact with the body passageway, by deforming a portion of the at least one prosthesis with a force in excess of the elastic limit of the portion of the at least one prosthesis, to implant the prostheses within the body passageway.

2. The method of claim **1**, further including the steps of: collapsing the portion of the catheter associated with the prostheses, and removing the catheter from the body passageway.

3. The method of claim **1**, including the steps of: utilizing a catheter having an expandable, inflatable portion associated therewith; and the expansion and deformation of the prostheses and the portion of the catheter is accomplished by inflating the expandable, inflatable portion of the catheter.

4. The method of claim **1**, wherein at least one prosthesis is provided with a biologically compatible coating on the outer surface of the prosthesis.

5. The method of claim **1**, including the step of disposing the at least one connector member in a non-parallel relationship with respect to the longitudinal axis of adjacent prostheses.

6. The method of claim **1**, including the step of: utilizing a wire mesh tube as each prosthesis, the wire mesh tubes having a first predetermined collapsed diameter which permits the tubes to be disposed upon the catheter and inserted into the body passageway.

7. The method of claim **6**, including the step of disposing the at least one connector member coplanar with each wire mesh tube and non-parallel to the longitudinal axis of the wire mesh tubes.

8. The method of claim **6**, wherein tantalum is utilized for the wire mesh tube.

9. The method of claim **1**, wherein a thin-walled, tubular member is utilized as each prosthesis, each tubular member having a plurality of slots formed therein, the slots being disposed substantially parallel to the longitudinal axis of the tubular member.

10. The method of claim **9**, wherein tantalum is utilized for the tubular member.

11. The method of claim **9**, wherein the slots are uniformly and circumferentially spaced from adjacent slots and the slots are uniformly spaced from adjacent slots along the longitudinal axis of each tubular member, whereby at least one elongate member is formed between adjacent slots.

12. The method of claim **11**, wherein the thin-walled tubular member and the elongate members disposed between adjacent slots have a uniform wall thickness.

13. The method of claim **9**, wherein each thin-walled tubular member is expanded and deformed to a second diameter within the body passageway; the second, expanded diameter being variable and determined by the internal diameter of the body passageway, whereby each expanded thin-walled tubular member will not migrate from the desired location within the body passageway and the expansion of each thin-walled tubular member does not cause a rupture of the body passageway.

14. The method of claim **13**, wherein each thin-walled tubular member is uniformly, outwardly expanded and deformed along its length.

15. The method of claim **9**, including the step of disposing the at least one connector member coplanar with each tubular member and non-parallel to the longitudinal axis of the tubular members.

16. The method of claim **9**, including the step of forming the at least one connector member as a thin-walled spiral member, coplanar with adjacent tubular members.

17. A method for expanding the lumen of a body passageway comprising the steps of:

connecting a plurality of intraluminal grafts by at least one flexible connector member disposed between adjacent grafts;

inserting the plurality of connected intraluminal grafts, disposed upon a catheter, into the body passageway until the grafts are disposed adjacent a desired location within the body passageway; and

expanding a portion of the catheter to provide controllable expansion of the intraluminal grafts radially, outwardly into contact with the body passageway, by deforming a portion of the intraluminal grafts with a force in excess of the elastic limit of the portion of the intraluminal grafts, until the lumen of the body passageway at the desired location in the body passageway has been expanded, whereby the intraluminal grafts prevent the body passageway from collapsing and decreasing the size of the expanded lumen, and the intraluminal rafts remain in the passageway.

18. The method of claim **17**, including the step of disposing the at least one connector member in a non-parallel relationship with respect to the longitudinal axis of the intraluminal grafts.

19. The method of claim **17**, including the step of: utilizing a wire mesh tube as the intraluminal graft, the wire mesh tube having a first predetermined, collapsed diameter which permits the tube to be inserted within the body passageway at the desired location.

20. The method of claim 19, including the step of disposing the at least one connector member coplanar with each wire mesh tube and non-parallel to the longitudinal axis of the wire mesh tubes.

21. The method of claim 19, wherein tantalum is utilized for the wire mesh tube.

22. The method of claim 17, wherein a thin-walled tubular member is utilized as each intraluminal graft, each tubular member having a plurality of slots formed therein, the slots being disposed substantially parallel to the longitudinal axis of the tubular members.

23. The method of claim 22, including the step of disposing the at least one connector member coplanar with each tubular member and non-parallel to the longitudinal axis of the tubular members.

24. The method of claim 22, including the step of forming the at least one connector member as a thin-walled spiral member, coplanar with adjacent tubular members.

25. An expandable intraluminal vascular graft, comprising:

a plurality of thin-walled tubular members, each having first and second ends and a wall surface disposed between the first and second ends, the wall surface having a substantially uniform thickness and a plurality of slots formed therein, the slots being disposed substantially parallel to the longitudinal axis of each tubular member;

at least one connector member being disposed between adjacent tubular members to flexibly connect adjacent tubular members;

each tubular member having a first diameter which permits intraluminal delivery of the tubular members into a body passageway having a lumen; and

the tubular members having a second, expanded and deformed diameter, upon the application from the interior of the tubular members of a radially, outwardly extending force, which second diameter is variable and dependent upon the amount of force applied to the tubular members, whereby the tubular members may be expanded and deformed to expand the lumen of the body passageway.

26. The expandable intraluminal graft of claim 25, wherein at least one connector member is disposed in a non-parallel relationship with respect to the longitudinal axis of the tubular members.

27. The expandable intraluminal graft of claim 25, wherein the at least one connector member is disposed coplanar with each tubular member and non-parallel to the longitudinal axis of the tubular members.

28. The expandable intraluminal graft of claim 25, wherein the at least one connector member is a thin-walled, spiral member, coplanar with adjacent tubular members.

29. An expandable prosthesis for a body passageway, comprising:

a plurality of thin-walled tubular members, each having first and second ends and a wall surface disposed between the first and second ends, the wall surface having a substantially uniform thickness and a plurality of slots formed therein, the slots being disposed substantially parallel to the longitudinal axis of each tubular member;

at least one connector member being disposed between adjacent tubular members to flexibly connect adjacent tubular members;

each tubular member having a first diameter which permits intraluminal delivery of the tubular members into a body passageway having a lumen; and

the tubular members having a second, expanded and deformed diameter, upon the application from the interior of the tubular members, of a radially, outwardly extending force, which second diameter is variable and dependent upon the amount of force applied to the tubular member, whereby the tubular member may be expanded and deformed to expand the lumen of the body passageway.

30. The expandable prosthesis of claim 29, wherein at least one connector member is disposed in a non-parallel relationship with respect to the longitudinal axis of the tubular members.

31. The expandable prosthesis of claim 29, wherein the at least one connector member is disposed coplanar with each tubular member and non-parallel to the longitudinal axis of the tubular members.

32. The expandable prosthesis of claim 29, wherein the at least one connector member is a thin-walled, spiral member, coplanar with adjacent tubular members.

33. An apparatus for intraluminally reinforcing a body passageway, comprising:

a plurality of expandable and deformable, thin-walled tubular prostheses, each prosthesis having first and second ends, and a wall surface disposed between the first and second ends, the wall surface having a plurality of slots formed therein, the slots being disposed substantially parallel to the longitudinal axes of the prostheses, at least one connector member being disposed between adjacent tubular members to flexibly connect adjacent tubular members; and

a catheter, having an expandable, inflatable portion associated therewith and including means for mounting and retaining the expandable, thin-walled tubular prostheses on the expandable, inflatable portion,

whereby upon inflation of the expandable, inflatable portion of the catheter, the prostheses are expanded and deformed radially outwardly into contact with the body passageway.

34. The apparatus of claim 33, wherein the mounting and retaining means comprises retainer ring members disposed on the catheter adjacent the expandable, inflatable portion and adjacent the ends of the expandable, tubular prostheses.

35. An apparatus for expanding the lumen of a body passageway comprising:

a plurality of expandable and deformable thin-walled intraluminal vascular grafts, each graft having first and second ends, and a wall surface disposed between the first and second ends, the wall surface having a plurality of slots formed therein, the slots being disposed substantially parallel to the longitudinal axes of the grafts, at least one connector member being disposed between adjacent tubular members to flexibly connect adjacent tubular members; and

a catheter, having an expandable, inflatable portion associated therewith and including means for mounting and retaining the expandable, deformable intraluminal vascular grafts on the expandable, inflatable portion,

whereby upon inflation of the expandable, inflatable portion of the catheter, the intraluminal vascular grafts are expanded and deformed radially outwardly into contact with the body passageway.

36. The apparatus of claim 35, wherein the mounting and retaining means comprises retainer ring members disposed on the catheter adjacent the expandable, inflatable portion and adjacent the ends of the expandable intraluminal vascular grafts.

* * * * *

UNITED STATES PATENT AND TRADEMARK OFFICE

CERTIFICATE OF CORRECTION

PATENT NO. : 5,102,417

DATED : April 7, 1992

INVENTOR(S) : Julio C. Palmaz and Richard A. Schatz

It is certified that error appears in the above-identified patent and that said Letters Patent is hereby corrected as shown below:

On the Title page, delete line (75) and insert - - (75) Inventors: Julio C. Palmaz, San Antonio, Texas and Richard A. Schatz, La Jolla, California

Signed and Sealed this

Eighth Day of June, 1993

Attest:

Michael K. Kirk

MICHAEL K. KIRK

Attesting Officer

Acting Commissioner of Patents and Trademarks