United States Patent [19]

Koch

[11] **Patent Number: 4,892,539**

[45] **Date of Patent: Jan. 9, 1990**

[54] VASCULAR GRAFT

[75] Inventor: **Durmus Koch**, Demarest, N.J.

[73] Assignee: **D-R Medical Systems, Inc.**, Northvale, N.J.

[21] Appl. No.: **152,978**

[22] Filed: **Feb. 8, 1988**

[51] **Int. Cl.**[4] **A61F 2/06**; A61F 2/04; D03D 3/02

[52] **U.S. Cl.** ..... **623/1**; 139/387 R; 600/36; 606/155

[58] **Field of Search** ..... 623/1, 11, 12; 128/334 R; 139/387 R, 388; 600/36

[56] **References Cited**

U.S. PATENT DOCUMENTS

2,127,903	8/1938	Bowen .	
3,142,067	7/1964	Liebig	623/1
3,254,651	6/1966	Collito .	
3,304,557	2/1967	Polansky	139/387 R
3,316,557	5/1967	Liebig .	
3,479,670	11/1969	Medell .	
3,805,301	4/1974	Liebig .	
3,945,052	3/1976	Liebig .	
4,047,252	9/1977	Liebig et al. .	
4,164,045	8/1979	Bokros et al. .	
4,190,909	3/1980	Ablaza .	
4,193,137	3/1980	Heck .	
4,208,745	6/1980	Okita .	
4,229,838	10/1980	Mano .	
4,250,138	2/1981	Okita .	
4,282,011	8/1981	Terpay .	
4,304,010	12/1981	Mano .	
4,306,318	12/1981	Mano et al. .	
4,313,231	2/1982	Koyamada .	
4,321,914	3/1982	Begovac et al. .	
4,501,263	2/1985	Harbuck .	
4,517,687	5/1985	Liebig et al.	623/1
4,530,113	7/1985	Matterson .	

OTHER PUBLICATIONS

Vascular Surgery, Rutherford, 1984, pp. 384, 385, 387 and 389.

Biologic and Synthetic Vascular Prosthesis, Stanley, 1982, pp. 143, 144, 145, FIGS. 9-10, 9-12, 148, 181, 182, 210, 211, 487-490, 509-520 and 525.

Vascutek Triaxial not dated.

Bifurcated Gore—Tex Vascular Graft not dated.

Gore—Tex Suture (4 pages) ©1986.

Gore—thinner with even better handling ©1984.

Bard—Be prepared ©1987.

Inter Vascular—Which Graft not dated.

Primary Examiner—Alan W. Cannon

Attorney, Agent, or Firm—Donald Brown

[57] **ABSTRACT**

A vascular tubular graft of a woven fabric with a single velour outside (external) surface and a smooth interior surface, said outside surface having a plurality of loops, each loop extending around a portion of the circumference thereof and each loop formed by fill yarn positioned about warp yarn.

16 Claims, 1 Drawing Sheet

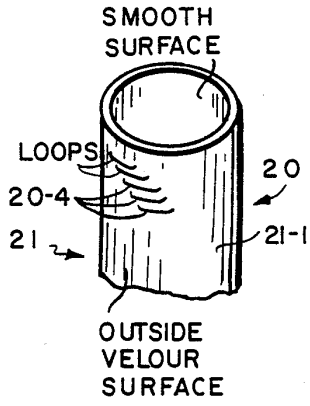

Edwards v. Aortic Innovations
U.S. Patent 11,497,634
Edwards Ex. 1134

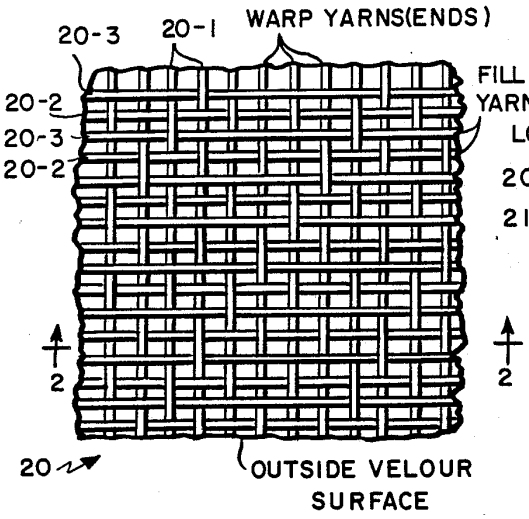

FIG. 1

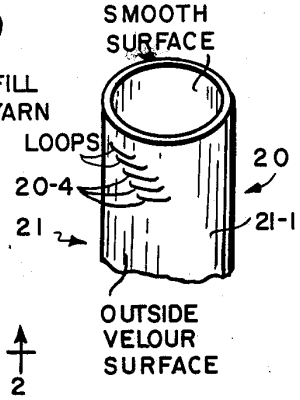

FIG. 3

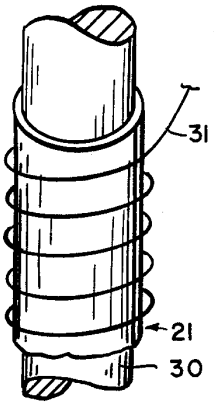

FIG. 4

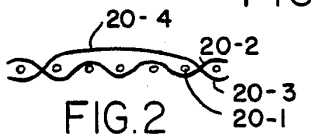

FIG. 2

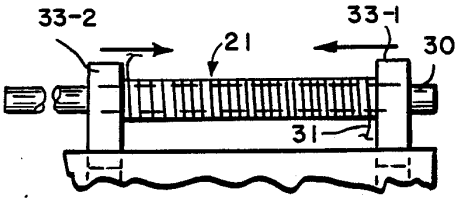

FIG. 5

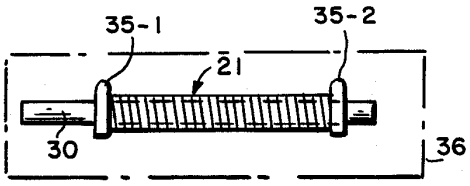

FIG. 6

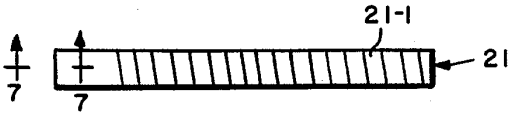

FIG. 7

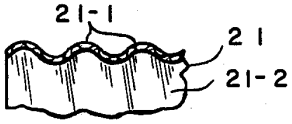

FIG. 8

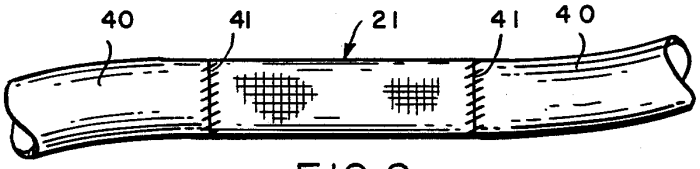

FIG. 9

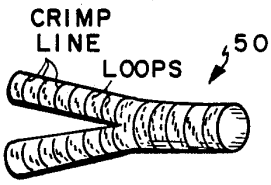

FIG. 10

VASCULAR GRAFT

BACKGROUND OF THE DISCLOSURE

This invention is directed to vascular grafts of synthetic fibers. Vascular grafts (prothesis) are currently used to replace certain diseased arteries by joining e.g., by sewing the ends of the vascular tubular grafts to the remaining portions of the artery e.g., human artery. Operations for this purpose are commonly done by surgeons who first remove the diseased portion of the artery, e.g., blocked by a clot, and then implant the graft in its place. Alternatively, the graft may be used as a bypass around a diseased vessel. Such grafts usually are used in connection with arteries which carry large blood volumes e.g., located in the lower body of the human, although it may be used in other parts of the human body. Grafts which are presently in use are of a woven or knitted construction. Knitted construction grafts tend to be of high porosity and thus bleeding often accompanies their use. While woven grafts are in wide use, there is still a need for a new and improved woven graft that because of its weave construction is of low porosity, is smooth on the interior of the graft to prevent obstruction thereof by various material carried by the blood in the graft, and provides a staggered design outer looped surface extending around the circumference thereof to allow for the body tissue which grows thereabout after implantation to firmly support it in the body. The graft is also preferably crimped so that it will not kink easily during implantation.

PRIOR WORK IN THE FIELD

The following U.S. Pat. Nos. may be referred to which show the state of the art: 4,517,687; 4,047,252; 4,501,263; 4,164,045; 4,229,838; 3,316,557; 3,945,052; 4,190,909; 4,304,010; 2,127,903; 4,313,231; 4,208,745; 4,530,113; 4,193,137; 3,254,651; 3,479,670; and 4,306,318. Patents relating to plastics which may be of interest include No. 4,250,138 and No. 4,321,914. Reference may also be had to the following articles: "A New Woven Double Velour Vascular Prosthesis", Stewart Scott et al, J. Cardionvasc, Surg. 26, 1985 and "Aortoiliac Reconstruction with Dacron Double Velour", S. M. Lindenauer et al, J. Cardiovasc, Surg., 25, 1984, which also shows the state of the art and the utility of vascular grafts.

BRIEF DESCRIPTION OF THE DISCLOSURE

The invention is directed to a woven velour synthetic tubular graft (straight or bifurcated) preferably of polyester such as polyethylene terephthalate having a velour structure as its outer surface and a plain weave as its inner surface. The velour structure at the outer surface is provided by the fill yarn rather than the warp yarns. The differentiation between the inner surface (plain weave) and the outer velour surface is accomplished by having the filling yarn interlacing with the warp yarns at different patterns preferably every other pick. For example, if the weaving started with a plain weave, the next interlacing pick is a velour-generating pick, which extends over a predetermined number of warp ends before interfacing with a single end of warp. The yarn used is preferably of polyester and the especially preferred yarn used are made by Dupont under the Trademark DACRON. Type 56 Dacron yarn is the most preferred for both the fill and warp yarns, however, comparable yarns and fibers may be used as will be

apparent to those skilled in the art. The yarn may be used as textured or untexturized with texturized being preferred. The purposes of the outer velour is to provide a base for rapid internal human body tissue growth about the velour circumferential loops thus securing the position of the graft and the smooth inner surface is provided to prevent formations of obstructions on the interior wall of the graft. In addition, because the velour is in the fill position, the process for crimping of the graft will not affect the structure of the velour and will not cause the velour loop to fold or elongate and thus weaken the graft. In this invention the warp yarns run lengthwise in the tubular graft and are crossed by the fill yarn. The fabric of this invention is tightly woven and of low porosity in order to prevent bleeding through the graft after implantation.

The graft may be a straight tubular shape for connection to a single artery to replace a diseased section, or for replacing a three arm connection i.e., connection to three arteries, the graft may be made in bifurcated form.

Before implantation, the graft is preclotted with the patients blood to make it impervious to bleeding. Because the graft has a smooth inner surface, it will not pick up excessive clotting material from the blood which is likely to be a precursor to an obstructed graft after implantation. Also, with the smooth inner surface the possibility of a clot forming in the graft and being released in the blood stream is decreased.

BRIEF DESCRIPTION OF THE DRAWINGS

FIG. **1** is a top plan view of the woven fabric as used in accordance with the present invention to show the velour outer surface pattern;

FIG. **2** is a sectional view taken along line **2**—**2** FIG. **1**;

FIG. **3** is a tube made of the fabric of FIG. **1**;

FIG. **4** is view showing the first step in forming circumferential crimp in the fabric tube of FIG. **3**;

FIG. **5** is view showing the second step in forming the crimp in the fabric tube of FIG. **3**;

FIG. **6** is view showing the third step in forming the crimp of the tube of FIG. **3**;

FIG. **7** shows the finished woven external velour graft in straight (tube) form of the invention;

FIG. **8** is a section taken along line **7**—**7** in FIG. **7** in order to show the crimp in the outer wall;

FIG. **9** is a view showing the graft sewn to repair an artery; and

FIG. **10** is a view showing the graft of this invention in a bifurcated form.

DETAILED DESCRIPTION OF THE DISCLOSURE

Reference should now be made to FIGS. **1**, **2** and **3** which show the fabric of the invention (FIG. **1**) which is formed into a tube **21** for use as a graft. In FIG. **1** the warp yarns are shown at **20-1** and the fill yarn is shown having portions **20-2** and **20-3**. Fill yarn portion **20-2** is shown in a plain weave pattern with the fill yarn interlacing with the warp yarns as shown in an under and over plain weave fashion. The velour in the fabric is formed by interlacing of the fill yarn portion **20-3** which forms a velour pattern having outside loops **20-4** which float (extend) over five warp yarn ends **20-1** as shown.

The next velour loop pattern formed by fill yarn portion **20-3**, after the next regular weave pattern formed by fill yarn portion **20-2**, is then staggered one

warp yarn to form the weave pattern of FIG. **1**. The weaving is continued one yarn at a time for the entire pattern to form the staggered velour loops **20-4** (see FIG. **3**) which is provided around the outer circumference of the tube **21** formed of the fabric **20**. As shown in FIG. **1** the loops **20-4** preferably extend over 5 warp yarns, however, in the practice of the invention, loops of fill yarn which extend over 4 to 8 warp yarns are quite acceptable.

In order to form the tube of the invention e.g., Dacron brand type 56 yarn 80 Denier/47 filament is preferably used for both the warp yarns and fill yarn. The yarns are preferably texturized on a standard false twist texturing machine. After texturizing, the yarn is wrapped (wound) about one another to form from the 50 Danier/47 filament yarn, a 100 Danier/94 filament warp yarn with 5 turns per inch twist. The fill yarn is similarly formed except it only has 1 to 2 turns per inch of twist. Thereafter the fabric of FIG. **1** is woven in a conventional manner using a loom as known in the art. The woven outer (external) velour fabric **20** is preferably formed using 160 ends per inch for warp and 130 picks per inch in the fill position. The tube that is usually formed is about 6 to 38 mm in diameter depending upon the use intended, however it may be made in various lengths e.g., 90 to 20 cm.

Thereafter the woven tube such as shown in FIG. **3** is washed to remove oils and other materials using conventional washing agents e.g., a mixture of 3 parts Hyponic OP55 agent (Diamond Shamrock) and 1 part Syntergist TER-1 (Diamond Shamrock) agent mixed with water (temperature 165° F. to 180° F.) in the ratio of 3% washing agents and 97% water. During this washing the tube **21** will shrink.

After washing, the woven tube **21** is placed over a mandrel **30** as shown in FIG. **4** in a tight fit. The tube is then wrapped with a plastic monofilament **31** (e.g., nylon, about 0.015 inches diameter) about 10 turns per inch. The wrapped tube **21** is then placed in a machine (see FIG. **5**) comprising two posts **33-1** and **33-2** holding the mandrel positioned on support **32**. The posts **33-1** and **32-1** are both moved as shown by the arrows to compress the tube from both ends from e.g., 60 to 20 cm. The monofilament **31** is then removed from about the tube **21**. Thereafter the compressed tube is positioned in an oven **36** on the mandrel **30** and held in place by clips **35-1** and **35-2**. The tube is heated for 30 minutes at 250° F. At this time, the tube is removed from the oven, taken off the mandrel **31** and placed over a smaller diameter mandrel about 1 to 2 mm in diameter less than the first mandrel. The product is then streched e.g., by hand to 40 cm in length so that the crimp is not as dense. Thereafter, the crimped tube **21** is again placed in the oven at 250° F. for 30 minutes to form the final shape as shown in FIG. **7**.

FIGS. **7** and **8** show the final product after crimping with the looped velour outer surface **21-1** and inner smooth surface **21-2**. In FIG. **9** there is shown the graft **21** sewn by surgical thread **41** to an artery **40** after the diseased artery section has been surgically removed. FIG. **10** shows the final product **50** having the same weave construction and crimp as the tube shown in FIGS. **1** to **9** in a bifurcated form (Y) for connection to three artery branches e.g., aorta to the left and right iliac arteries.

As is customery, the graft is immersed in the blood of the patient to preclot it prior to use as shown in FIG. **9**.

It is to be understood that other conventional methodology may be used to fabricate the graft as would be apparent to those skilled in the art.

It is also to be understood that multiple fill yarns instead of a single fill yarn may be used to weave the products of the invention. It is also to be understood that in addition to a single fill on a second shuttle of a loom, that multiple fill yarns on a single shuttle or on multiple shuttles may be used to weave the tubes of the invention. The use of multiple yarns on multiple shuttling will afford the opportunity to vary tension and type of yarn from shuttle to shuttle.

I claim:

1. A vascular graft comprising a seamless tube of crimped woven texturized yarn fabric, said tube having a complete outer velour surface and a smooth inner surface, said outer velour surface having loops open to receive tissue ingrowth formed of fill yarn, each of said loop extending outside of a plurality of warp yarns.

2. The graft of claim **1** in which the fill yarn is also positioned about warp yarns in a plain pattern, said plain pattern being positioned between adjacent fill yarn forming the loops.

3. A hollow tubular graft comprising a single outer woven complete velour fabric from warp yarns and fill yarn, said warp yarns supporting a plurality of first fill yarn portions, said first fill yarn portions are positioned outside of warp yarns to from only outer circumferential loops exclusive of inner circumferenctial loop with the loops each extending outside of 4 to 8 warp yarns and the adjacent second fill yarn portions woven so they are offset from one another at least one warp yarn so that adjacent loops along the length of the tubular graft are out of alignment, said loops being substantially transverse to the longitudinal axis of the tube.

4. The graft according to claim **1** in which the yarns are polyester.

5. The graft of claim **3** which is crimped.

6. The graft of claim **3** in which the yarns are texturized.

7. The graft of claim **3** in which the yarns are untexturized.

8. The graft of claim **1** in which the yarns are polyester.

9. The graft of claim **1** in which the yarns are polyethylene terephthlate.

10. The method of repairing an artery comprising connecting the graft of claim **1** to an artery.

11. The method of repairing an artery comprising connecting the graft of claim **3** to an artery.

12. A vascular tubular graft of a woven synthetic fibers with a complete velour external surface and a smooth interior surface, said external surface having a plurality of loops, each loop extending around a portion of the circumference of the graft and each loop formed by fill yarn positioned externally of warp yarns, said loops being substantially transverse to the longitudinal axis of the tubular graft and the warp yarns are in substantially the same direction as the longitudinal axis of the tubular graft.

13. The graft of claim **11** in which each loop along the length of the tubular graft is offset and out of alignment with the next adjacent loop.

14. The graft of claim **1**, **3** or **12** which is in a straight or bifurcated form.

15. The method of claim **10** in which the graft is in straight or bifurcated form.

16. The graft of claim **12** in which the tubular graft is crimped about its circumference.

* * * * *