US008141784B2

(12) **United States Patent**
Wang et al.

(10) **Patent No.: US 8,141,784 B2**
(45) **Date of Patent: Mar. 27, 2012**

(54) **ENCODED INFORMATION READING TERMINAL WITH USER-CONFIGURABLE MULTI-PROTOCOL WIRELESS COMMUNICATION INTERFACE**

(75) Inventors: **Ynjiun P. Wang**, Cupertino, CA (US); **Huyu Qu**, San Jose, CA (US); **James T. Sauerwein**, Charlotte, NC (US)

(73) Assignee: **Hand Held Products, Inc.**, Skaneateles Falls, NY (US)

(*) Notice: Subject to any disclaimer, the term of this patent is extended or adjusted under 35 U.S.C. 154(b) by 19 days.

(21) Appl. No.: **12/567,158**

(22) Filed: **Sep. 25, 2009**

(65) **Prior Publication Data**

US 2011/0073654 A1 Mar. 31, 2011

(51) **Int. Cl.**
G06K 19/06 (2006.01)

(52) **U.S. Cl.** **235/462.25**; 235/462.44; 235/472.01

(58) **Field of Classification Search** 235/462.44, 235/462.45, 472.01, 472.02, 472.03, 462.46, 235/462.25
See application file for complete search history.

(56) **References Cited**

U.S. PATENT DOCUMENTS

4,774,715 A 9/1988 Messenger et al.

(Continued)

FOREIGN PATENT DOCUMENTS

EP 2061285 A2 5/2009

(Continued)

OTHER PUBLICATIONS

European Patent Office, Partial European Search Report, European Patent Application No. 10176444.7, dated Feb. 11, 2011 (8 pages).

(Continued)

Primary Examiner — Karl D. Frech
(74) *Attorney, Agent, or Firm* — Heslin Rothenberg Farley & Mesiti P.C.

(57) **ABSTRACT**

An encoded information reading (EIR) terminal can comprise a microprocessor electrically coupled to a system bus, a memory communicatively coupled to the microprocessor, an encoded information reading (EIR) device, and a wireless communication interface. The EIR device can be selected from the group consisting of a bar code reading device, an RFID reading device, and a card reading device. The EIR device can be configured to perform outputting raw message data containing an encoded message and/or outputting decoded message data corresponding to an encoded message. The wireless communication interface can comprise a radio frequency front end configured to perform receiving a first radio signal and/or transmitting a second radio signal. The radio frequency front end can be electrically coupled to an analog-to-digital converter (ADC) which can be electrically coupled to the system bus and/or to a digital-to-analog converter (DAC) which can be electrically coupled to the system bus. The microprocessor can be configured to execute a base-band encoder software program and/or a base-band decoder software program. The base-band encoder software program can be configured to produce a first encoded bit stream by performing at least one of the following functions: source encoding of a first bit stream, encryption, channel encoding, multiplexing, modulation, frequency spreading, and media access control. The DAC can be configured to output to the radio frequency front end an analog signal corresponding to the first encoded bit stream. The ADC can be configured to output a second encoded bit stream corresponding to an analog signal produced by the radio frequency front end. The base-band decoder software program can be configured to produce a second bit stream corresponding to the second encoded bit stream by performing at least one of the following functions: media access control, frequency de-spreading, de-modulation, de-multiplexing, channel decoding, decryption, and source decoding.

23 Claims, 9 Drawing Sheets

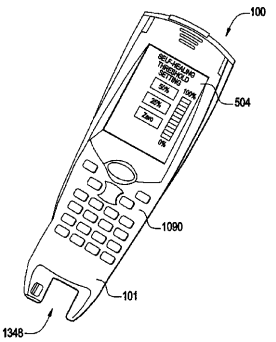

TransCore LP
Exhibit 1001

U.S. PATENT DOCUMENTS

4,825,058	A	4/1989	Poland
4,868,375	A	9/1989	Blanford
5,101,406	A	3/1992	Messenger et al.
5,256,865	A	10/1993	Wike, Jr. et al.
5,347,113	A	9/1994	Reddersen et al.
5,510,606	A	4/1996	Worthington et al.
5,579,341	A	11/1996	Smith et al.
5,610,595	A	3/1997	Garrabrant et al.
5,793,903	A	8/1998	Lopresti et al.
5,802,179	A	9/1998	Yamamoto et al.
5,812,605	A	9/1998	Smith et al.
5,815,811	A	9/1998	Pinard et al.
5,903,825	A	5/1999	Goode et al.
5,973,681	A	10/1999	Tanigawa et al.
6,167,099	A	12/2000	Rader et al.
6,345,764	B1	2/2002	Knowles
6,384,744	B1	5/2002	Philyaw et al.
6,751,470	B1	6/2004	Ella et al.
6,823,388	B1	11/2004	Philyaw et al.
6,908,034	B2	6/2005	Alleshouse
6,911,945	B2	6/2005	Korva
6,937,196	B2	8/2005	Korva
6,961,544	B1	11/2005	Hagstrom
7,072,690	B2	7/2006	Shin et al.
7,159,214	B2	1/2007	Rajaram et al.
7,161,357	B2	1/2007	Lee et al.
7,190,728	B2	3/2007	Kawada et al.
7,202,776	B2	4/2007	Breed
7,202,819	B2	4/2007	Hatch
7,218,678	B2	5/2007	Katta et al.
7,251,499	B2	7/2007	Ella et al.
7,265,731	B2	9/2007	Vance et al.
7,283,094	B2	10/2007	Lee
7,307,331	B2	12/2007	Kipnis et al.
7,333,067	B2	2/2008	Hung et al.
7,367,514	B2	5/2008	Soule et al.
7,368,311	B2	5/2008	Tilmans et al.
7,423,599	B2	9/2008	Li et al.
7,446,717	B2	11/2008	Hung et al.
7,466,274	B2	12/2008	Lin et al.
7,586,387	B2	9/2009	Van Delden
7,592,957	B2	9/2009	Achour et al.
7,617,342	B2	11/2009	Rofougaran
7,696,929	B2	4/2010	Kaneda
7,741,965	B2	6/2010	Lai et al.
7,750,435	B2	7/2010	Rofougaran et al.
7,764,232	B2	7/2010	Achour et al.
7,795,700	B2	9/2010	Rofougaran et al.
7,809,329	B2	10/2010	Rofougaran et al.
7,835,157	B2	11/2010	Tilmans et al.
7,839,216	B2	11/2010	Alidio et al.
7,839,236	B2	11/2010	Dupuy et al.
7,847,739	B2	12/2010	Achour et al.
7,855,696	B2	12/2010	Gummalla et al.
7,874,483	B2	1/2011	Wang et al.
7,885,600	B2	2/2011	Rofougaran et al.
7,893,790	B2	2/2011	Van Delden
7,899,394	B2	3/2011	Rofougaran et al.
7,903,724	B2	3/2011	Rofougaran et al.
7,908,420	B2	3/2011	Rofougaran et al.
2002/0055368	A1	5/2002	Lee
2002/0066788	A1	6/2002	Knowles
2002/0183013	A1	12/2002	Auckland et al.
2004/0249915	A1	12/2004	Russell
2005/0128152	A1	6/2005	Milosavljevic
2005/0156796	A1	7/2005	Nysen
2005/0271133	A1	12/2005	Waxman
2006/0025102	A1	2/2006	Kipnis et al.
2006/0070089	A1	3/2006	Shoaib et al.
2006/0128332	A1	6/2006	van Rooyen et al.
2006/0135084	A1	6/2006	Lee
2006/0261821	A1	11/2006	Lee et al.
2006/0261938	A1	11/2006	Lai et al.
2006/0279446	A1	12/2006	Wang et al.
2007/0060089	A1	3/2007	Owen et al.
2007/0152058	A1*	7/2007	Yeakley et al. 235/462.01
2007/0257847	A1	11/2007	Su et al.
2008/0042847	A1	2/2008	Hollister et al.
2008/0048917	A1	2/2008	Maha et al.
2008/0076383	A1	3/2008	Barrett et al.
2008/0107213	A1	5/2008	Gupta et al.
2008/0150807	A1	6/2008	Lin et al.
2008/0150829	A1	6/2008	Lin et al.
2008/0157897	A1	7/2008	Tilmans et al.
2008/0181186	A1	7/2008	Rofougaran et al.
2008/0181287	A1	7/2008	Rofougaran et al.
2008/0182613	A1	7/2008	Rofougaran et al.
2008/0203167	A1	8/2008	Soule et al.
2008/0237341	A1	10/2008	Fleck et al.
2008/0258981	A1	10/2008	Maha et al.
2008/0258993	A1	10/2008	Gummalla et al.
2008/0278370	A1	11/2008	Lachner et al.
2008/0297404	A1	12/2008	Lin et al.
2009/0006677	A1	1/2009	Rofougaran et al.
2009/0024550	A1	1/2009	Wynn et al.
2009/0028082	A1	1/2009	Wynn et al.
2009/0032592	A1	2/2009	Christensen
2009/0033359	A1	2/2009	Rofougaran et al.
2009/0036067	A1	2/2009	Rofougaran et al.
2009/0037627	A1	2/2009	Rofougaran et al.
2009/0058734	A1	3/2009	Ali et al.
2009/0067388	A1	3/2009	van Rooyen et al.
2009/0073065	A1	3/2009	Jordan
2009/0074106	A1	3/2009	See et al.
2009/0115549	A1	5/2009	Lee
2009/0121951	A1	5/2009	Kaneda
2009/0128446	A1	5/2009	Gummalla et al.
2009/0135087	A1	5/2009	Gummalla et al.
2009/0148074	A1	6/2009	Xu et al.
2009/0160575	A1	6/2009	Dupuy et al.
2009/0160578	A1	6/2009	Achour
2009/0167457	A1	7/2009	Melde et al.
2009/0180403	A1	7/2009	Tudosoiu
2009/0218657	A1	9/2009	Rofougaran et al.
2009/0219213	A1	9/2009	Lee et al.
2009/0227205	A1	9/2009	Rofougaran et al.
2009/0245146	A1	10/2009	Gummalla et al.
2009/0251385	A1	10/2009	Xu et al.
2009/0285135	A1	11/2009	Rousu et al.
2009/0289737	A1	11/2009	Itoh et al.
2009/0295473	A1	12/2009	Dupuy et al.
2009/0295483	A1	12/2009	Alidio et al.
2009/0295660	A1	12/2009	Xu et al.
2009/0316612	A1	12/2009	Poilasne et al.
2009/0322490	A1	12/2009	Kung et al.
2009/0323783	A1	12/2009	Buris et al.
2010/0022195	A1	1/2010	Rofougaran et al.
2010/0045554	A1	2/2010	Xu et al.
2010/0060544	A1	3/2010	Penev et al.
2010/0073254	A1	3/2010	Lee et al.
2010/0077115	A1	3/2010	Rofougaran et al.
2010/0079347	A1	4/2010	Hayes et al.
2010/0109805	A2	5/2010	Anchour
2010/0109971	A2	5/2010	Gummalla et al.
2010/0109972	A2	5/2010	Xu et al.
2010/0110943	A2	5/2010	Gummalla et al.
2010/0117908	A2	5/2010	Lee et al.
2010/0123635	A1	5/2010	Lopez et al.
2010/0127085	A1	5/2010	Yamagajo et al.
2010/0157858	A1	6/2010	Lee et al.
2010/0171563	A1	7/2010	Dupuy et al.
2010/0176880	A2	7/2010	Dupuy et al.
2010/0207703	A1	8/2010	Dupuy et al.
2010/0225554	A1	9/2010	Huang et al.
2010/0231464	A1	9/2010	Huang et al.
2010/0231470	A1	9/2010	Lee et al.
2010/0232474	A1	9/2010	Rofougaran et al.
2010/0238075	A1	9/2010	Pourseyed
2010/0238081	A1	9/2010	Achour et al.
2010/0276498	A1	11/2010	Rofougaran et al.
2010/0283692	A1	11/2010	Achour et al.
2010/0283705	A1	11/2010	Achour et al.
2010/0285634	A1	11/2010	Rofougaran et al.
2011/0026624	A1	2/2011	Gummalla et al.
2011/0039501	A1	2/2011	Achour et al.
2011/0050364	A1	3/2011	Achour
2011/0066774	A1	3/2011	Rofougaran et al.

2011/0068873	A1	3/2011	Alidio et al.
2011/0095950	A1	4/2011	Yu
2011/0095964	A1	4/2011	Pathak et al.
2011/0109402	A1	5/2011	Dupuy et al.
2011/0136457	A1	6/2011	Yu
2011/0148586	A1	6/2011	Anderson et al.
2011/0153349	A1	6/2011	Anderson et al.
2011/0174877	A1	7/2011	Fleck et al.

FOREIGN PATENT DOCUMENTS

WO	WO-9814023	A1	4/1998
WO	WO-9814023	A3	4/1998

OTHER PUBLICATIONS

European Patent Office, European Search Report, European Patent Application No. 10176444.7, dated Jun. 6, 2011 (5 pages).
C.T.-C Nguyen, "Vibrating RF MEMS for Low Power Communications (invited)," Proceedings, 2002 MRS Fall Meeting, Boston, Massachusetts, Dec. 2-6, 2002, pp. J12.1.1-J2.1.12 (12 pages).
European Patent Office, European Patent Application No. 10191449.1, Communication Extended Search Report, dated Feb. 21, 2011 (11 pages).
European Patent Office, Partial European Search Report, European Patent Application No. 10176444.7, dated Feb. 11, 2011 (8 pages).
Hawaii International Conference On, IEEE, Piscataway, NJ, USA, Dynamic Dispatching and Transport Optimization-Real-World Experience with Perspectives on Pervasive Technology Integration, dated Jan. 5, 2009 (9 pages).
S. Lee and C. T. -C Nguyen, "Influence of Automatic Level Control on Micromechanical Resonator Oscsillator Phase Noise," proceedings, 2003 IEEE Int. Frequency Control Symposium, Tampa, Florida, May 5-8, 2003, pp. 341-349. (9 pages).
State Intellectual Property Office, P.R. China, Notice of Amendment, Chinese Application No. 201010544113.X, Dated Dec. 7, 2010, (2 pages).
www.nano.gatech.edu/news/release.php, Georgia Institute of Technology: Nanoscience and Nanotechnology, "Researchers Win $3.5 Million to Improve Wireless," Website, Aug. 5, 2010, (3 pages).
U.S. Appl. No. 12/621,914 filed with the United States Patent and Trademark Office Nov. 19, 2009.
U.S. Appl. No. 12/211,555 filed with the United States Patent and Trademark Office Aug. 17, 2011 (41 pages).
U.S. Appl. No. 13/211,568, filed with the United States Patent and Trademark Office Aug. 17, 2011 (35 pages).
U.S. Appl. No. 13/211,575, filed with the United States Patent and Trademark Office, Aug. 17, 2011 (27 pages).
EPC Global, Specification for RFID AIR Interface, dated Jan. 31, 2005 (94 pages).
European Patent Office, European Search Report, European Patent Application No. 10176444.7, dated Jun. 6, 2011 (5 pages).
European Patent Office, Communication Pursuant to Article 94(3) EPC, European Patent Application No. 10176444.7, dated Jul. 5, 2011 (10 pages).

* cited by examiner

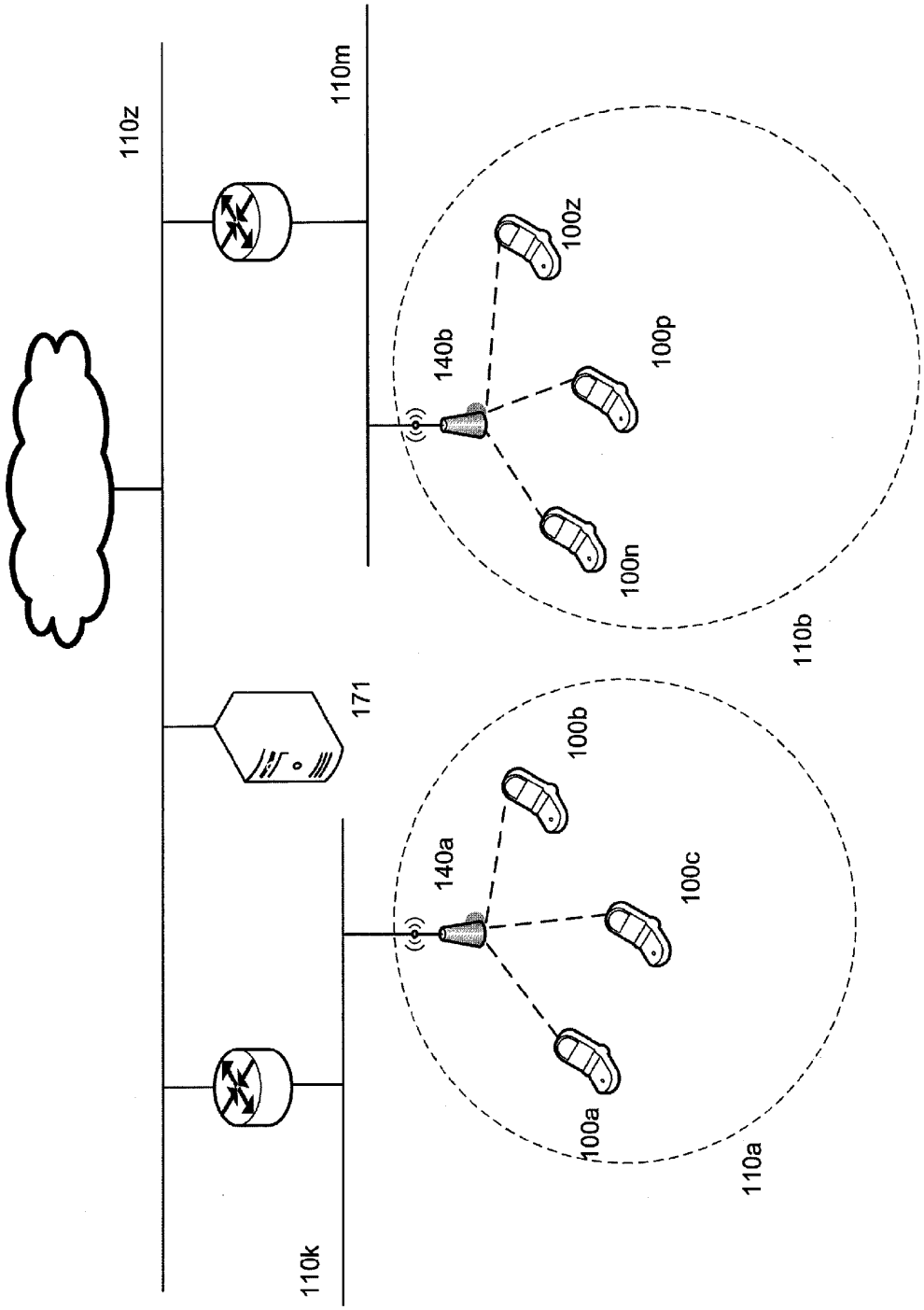
110z
110m
171
140b
100z
100p
100n
110b
140a
100b
100c
100a
110a
110k

Fig. 1

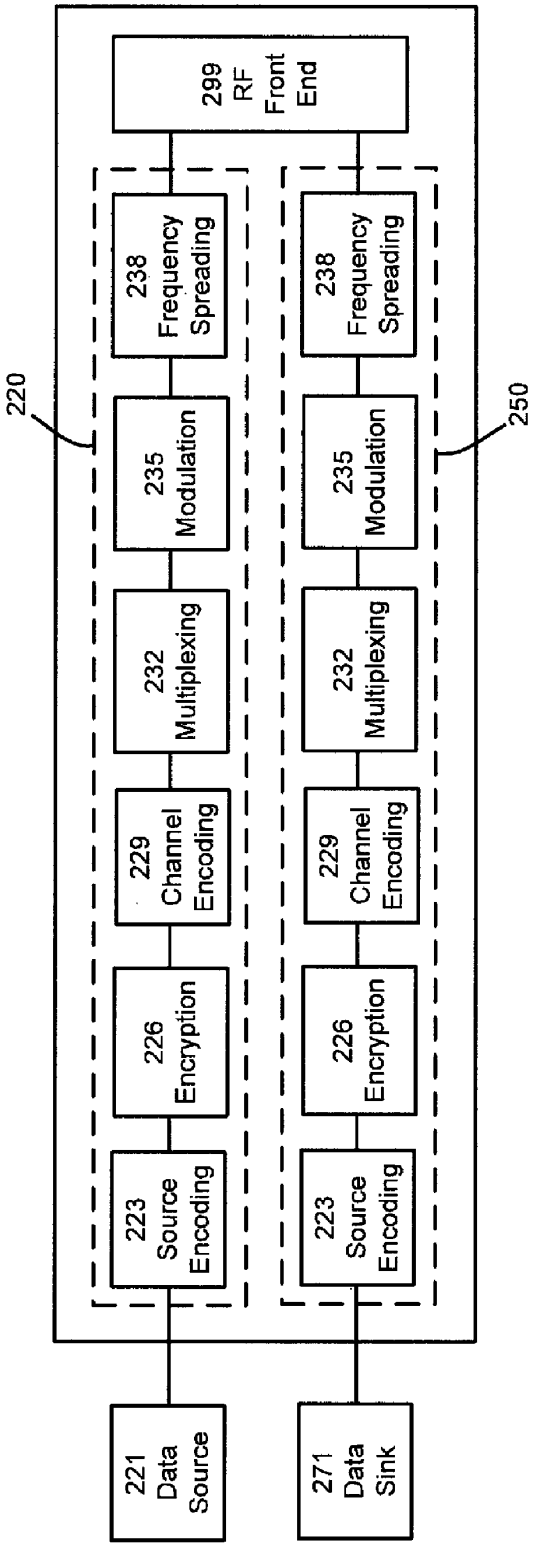
220
250
221 Data Source
223 Source Encoding
226 Encryption
229 Channel Encoding
232 Multiplexing
235 Modulation
238 Frequency Spreading
299 RF Front End
238 Frequency Spreading
235 Modulation
232 Multiplexing
229 Channel Encoding
226 Encryption
223 Source Encoding
271 Data Sink

Fig. 2

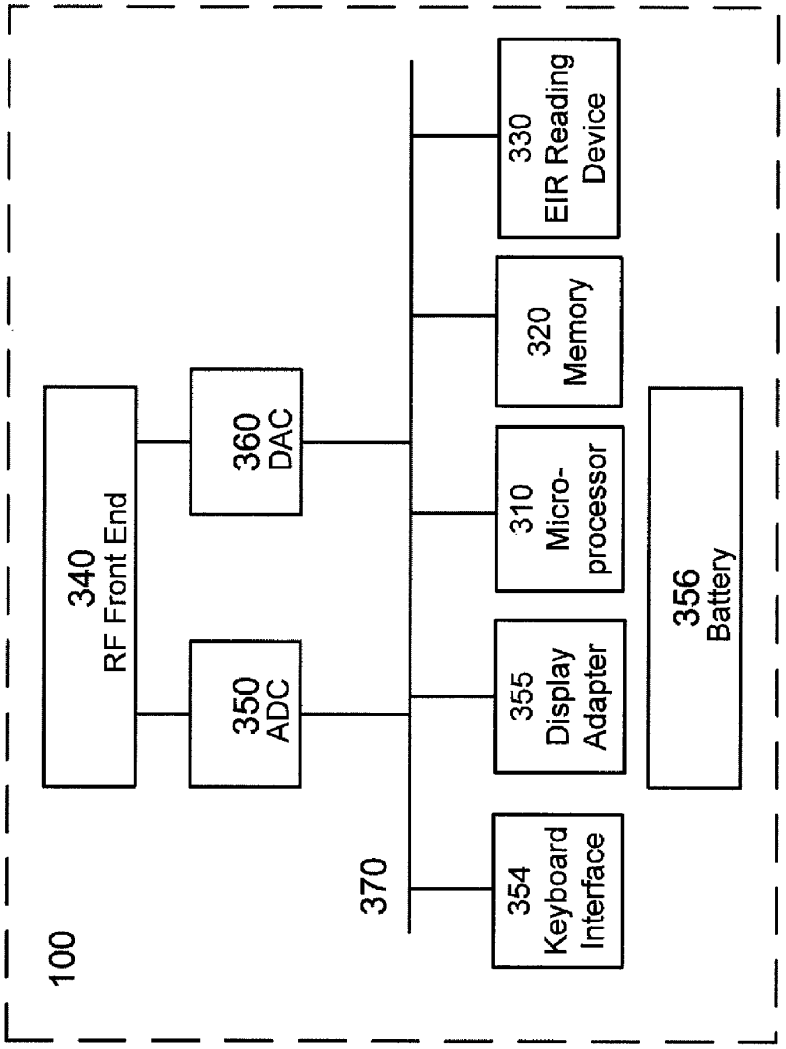
100
340
RF Front End
350
ADC
360
DAC
370
354
Keyboard
Interface
355
Display
Adapter
310
Micro-
processor
320
Memory
330
EIR Reading
Device
356
Battery

Fig. 3

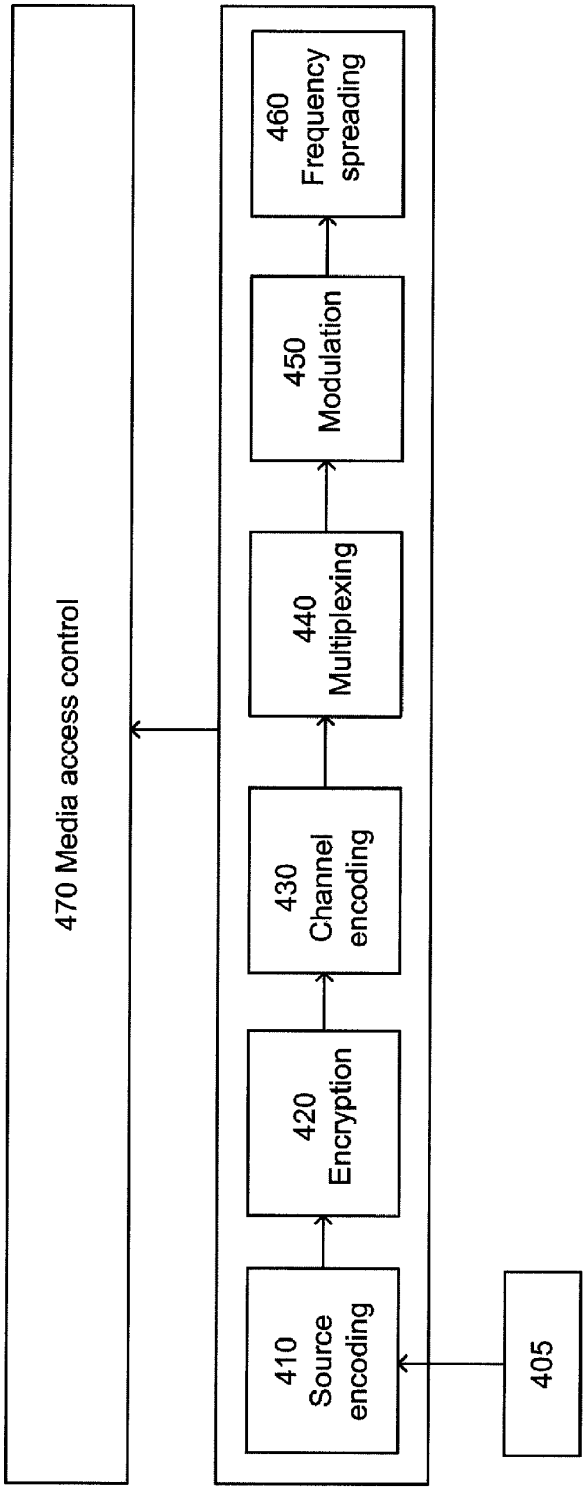
470 Media access control
410 Source encoding
420 Encryption
430 Channel encoding
440 Multiplexing
450 Modulation
460 Frequency spreading
405

Fig. 4

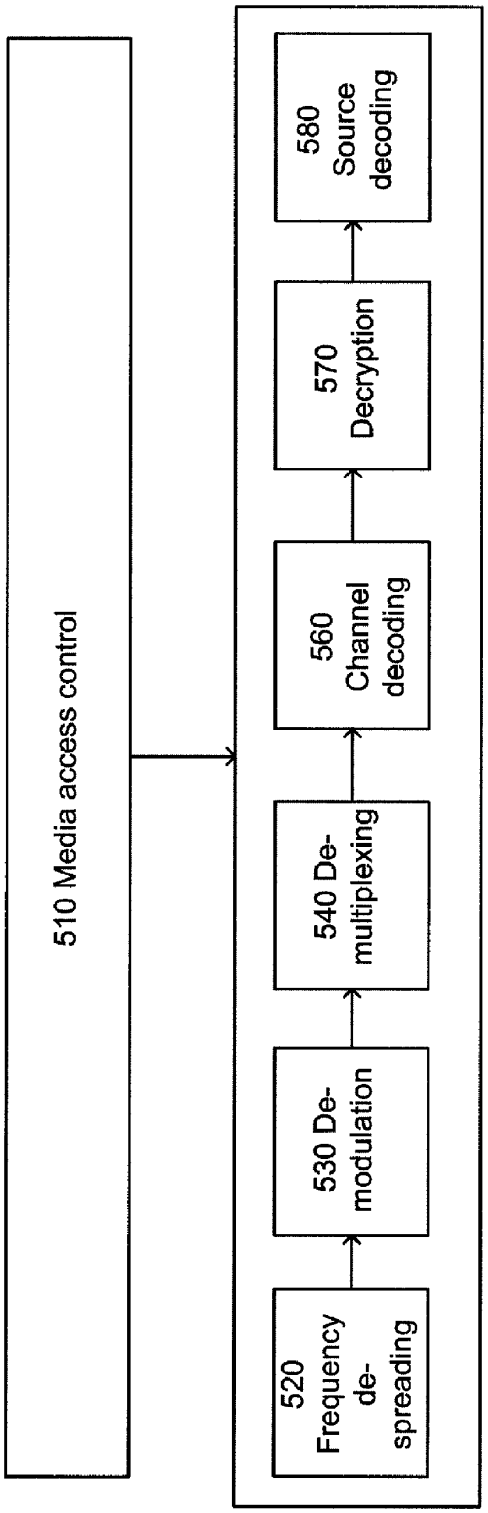
510 Media access control
520 Frequency de-spreading
530 De-modulation
540 De-multiplexing
560 Channel decoding
570 Decryption
580 Source decoding

Fig. 5

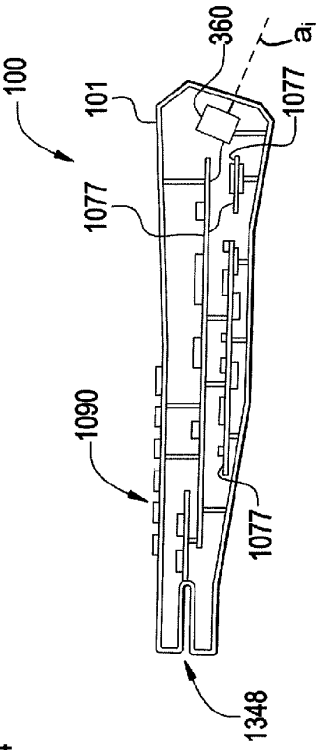
100
101
360
a_i
1077
1077
1090
1077
1348

FIG. 6b

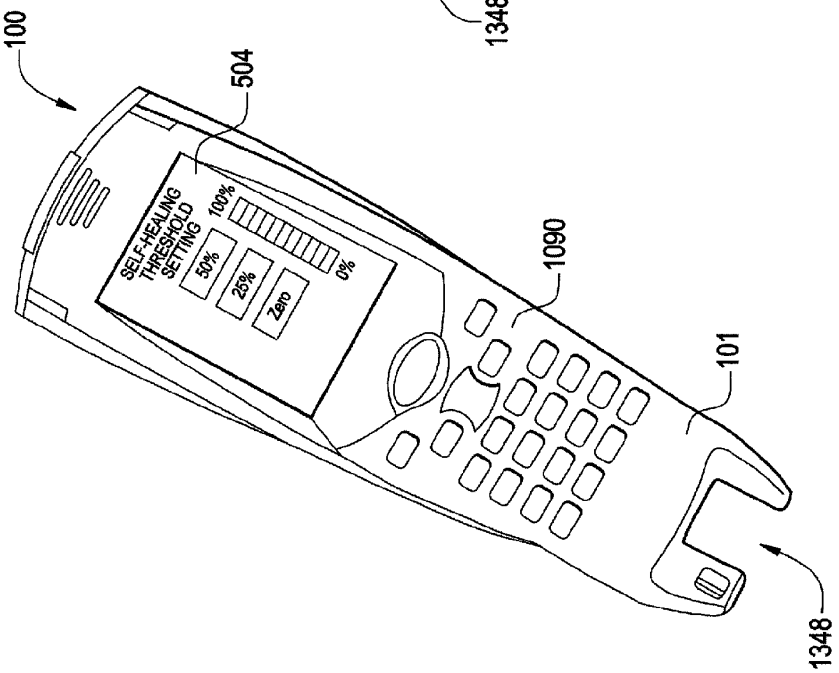
100
504
SELF-HEALING THRESHOLD SETTING
100%
50%
25%
Zero
0%
1090
101
1348

FIG. 6a

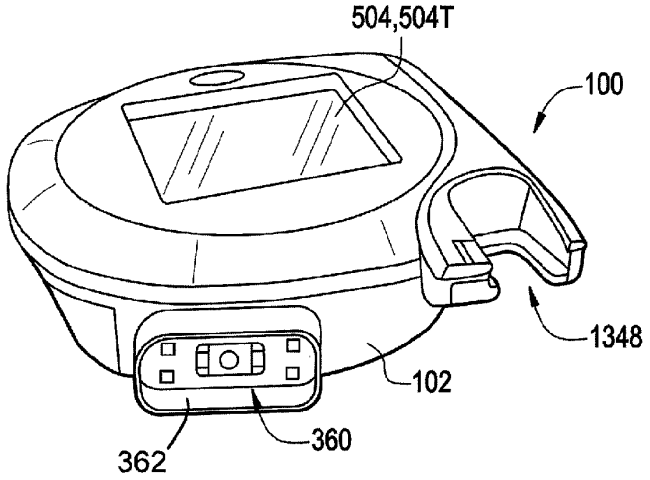

FIG. 7b

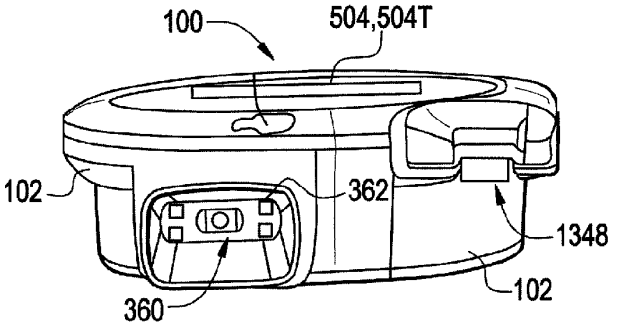

FIG. 7a

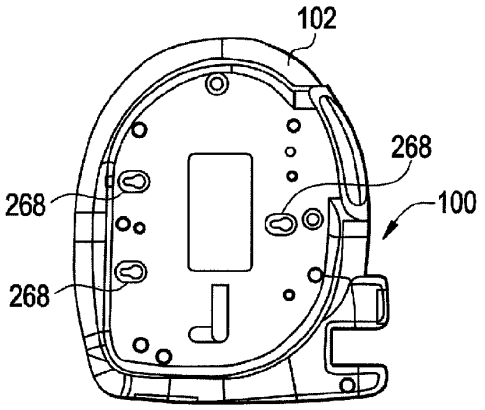

FIG. 7c

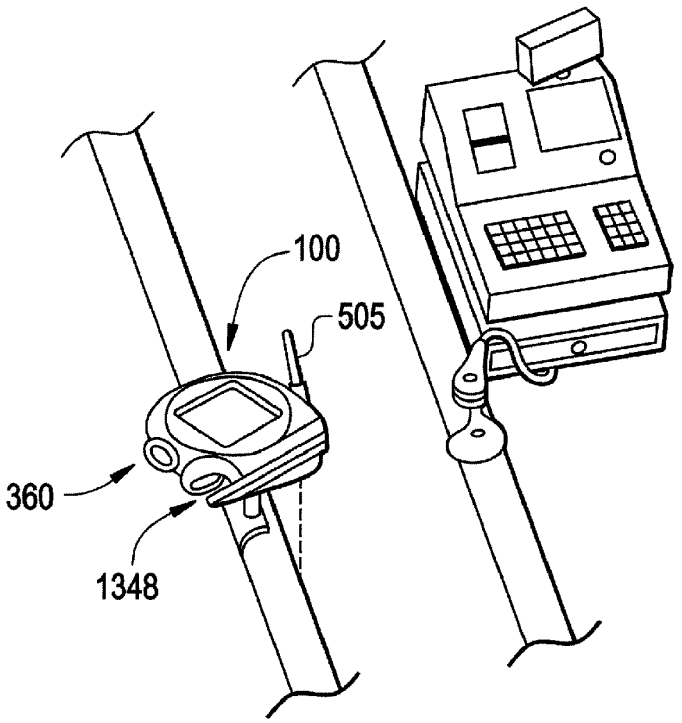

FIG. 8a

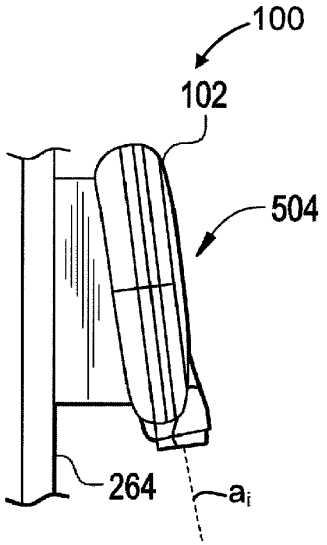

FIG. 8b

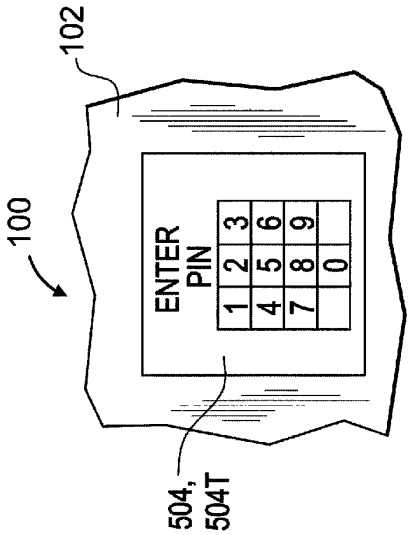
100
102
ENTER PIN
1 2 3
4 5 6
7 8 9
0
504, 504T

FIG. 8c

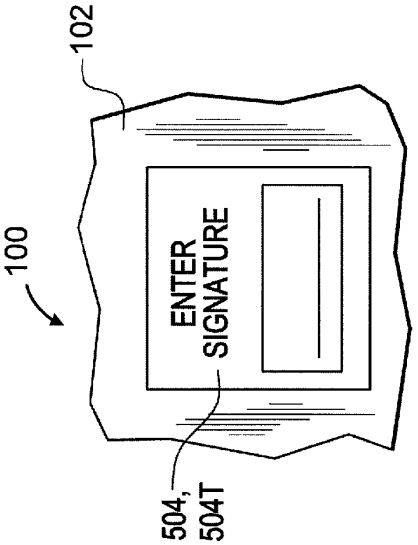
100
102
ENTER SIGNATURE
504, 504T

FIG. 8d

ENCODED INFORMATION READING TERMINAL WITH USER-CONFIGURABLE MULTI-PROTOCOL WIRELESS COMMUNICATION INTERFACE

FIELD OF THE INVENTION

The invention is generally related to encoded information reading (EIR) terminals and is specifically related to an EIR terminal comprising a multi-protocol wireless communication interface.

BACKGROUND OF THE INVENTION

Encoded information reading (EIR) terminals equipped with wireless communication interfaces are widely used in retail stores, shipping facilities, etc. While wireless communication of EIR terminals offers many advantages as compared to wired communications, traditional wireless communication interfaces have noticeable shortcomings, e.g., by failing to support more than one communication protocol and/or standard.

Accordingly, there is a need for further advances in EIR terminals and systems which would support multiple communication protocols and standards.

SUMMARY OF THE INVENTION

In one embodiment, there is provided an encoded information reading (EIR) terminal comprising a microprocessor electrically coupled to a system bus, a memory communicatively coupled to the microprocessor, an encoded information reading (EIR) device, and a wireless communication interface.

The EIR device can be selected from the group consisting of a bar code reading device, an RFID reading device, and a card reading device. The EIR device can be configured to perform outputting raw message data containing an encoded message and/or outputting decoded message data corresponding to an encoded message.

The wireless communication interface can comprise a radio frequency front end configured to perform receiving a first radio signal and/or transmitting a second radio signal. The radio frequency front end can be electrically coupled to an analog-to-digital converter (ADC) which can be electrically coupled to the system bus and/or to a digital-to-analog converter (DAC) which can be electrically coupled to the system bus.

The microprocessor can be configured to execute a base-band encoder software program and/or a base-band decoder software program. The base-band encoder software program can be configured to produce a first encoded bit stream by performing at least one of the following functions: source encoding of a first bit stream, encryption, channel encoding, multiplexing, modulation, frequency spreading, and media access control. The DAC can be configured to output to the radio frequency front end an analog signal corresponding to the first encoded bit stream.

The ADC can be configured to output a second encoded bit stream corresponding to an analog signal produced by the radio frequency front end. The base-band decoder software program can be configured to produce a second bit stream corresponding to the second encoded bit stream by performing at least one of the following functions: media access control, frequency de-spreading, de-modulation, de-multiplexing, channel decoding, decryption, and source decoding.

In another embodiment, there is provided an encoded information reading terminal comprising a microprocessor electrically coupled to a system bus, a memory communicatively coupled to the microprocessor, an encoded information reading (EIR) device, and a wireless communication interface.

The EIR device can be selected from the group consisting of a bar code reading device, an RFID reading device, and a card reading device. The EIR device can be configured to perform outputting raw message data containing an encoded message and/or outputting decoded message data corresponding to an encoded message.

The wireless communication interface can comprise an RF front end configured to perform receiving a first radio signal and/or transmitting a second radio signal. The RF front can be end electrically coupled to an analog-to-digital converter (ADC) which can be electrically coupled to the system bus and/or to a digital-to-analog converter (DAC) which can be electrically coupled to the system bus.

The EIR terminal can be configured to execute a wireless communication protocol selector software program, which can optimize a value of a user-defined criterion in order to dynamically select a wireless communication network, a wireless communication protocol, and/or a parameter of a wireless communication protocol.

In another embodiment, there is provided an encoded information reading terminal comprising a microprocessor electrically coupled to a system bus, a memory communicatively coupled to the microprocessor, an encoded information reading (EIR) device, and a wireless communication interface.

The EIR device can be selected from the group consisting of a bar code reading device, an RFID reading device, and a card reading device. The EIR device can be configured to perform outputting raw message data containing an encoded message and/or outputting decoded message data corresponding to an encoded message.

The wireless communication interface can comprise an RF front end configured to perform receiving a first radio signal and/or transmitting a second radio signal. The RF front can be end electrically coupled to an analog-to-digital converter (ADC) which can be electrically coupled to the system bus and/or to a digital-to-analog converter (DAC) which can be electrically coupled to the system bus.

The EIR terminal can be configured to dynamically select a wireless communication network, a wireless communication protocol, and/or a parameter of a wireless communication protocol responsive a user action and/or to scanning a pre-defined bar code.

In another embodiment, there is provided an encoded information reading terminal comprising a microprocessor electrically coupled to a system bus, a memory communicatively coupled to the microprocessor, an encoded information reading (EIR) device, and a wireless communication interface configured to support at least two wireless communication protocols.

The EIR device can be selected from the group consisting of a bar code reading device, an RFID reading device, and a card reading device. The EIR device can be configured to perform outputting raw message data containing an encoded message and/or outputting decoded message data corresponding to an encoded message.

The EIR terminal can be configured to execute a wireless communication protocol selector software program, which can optimize a value of a user-defined criterion in order to dynamically select a wireless communication network, a

wireless communication protocol, and/or a parameter of a wireless communication protocol.

In a further embodiment, there is provided an encoded information reading terminal comprising a microprocessor electrically coupled to a system bus, a memory communicatively coupled to the microprocessor, an encoded information reading (EIR) device, and a wireless communication interface configured to support at least two wireless communication protocols.

The EIR device can be selected from the group consisting of a bar code reading device, an RFID reading device, and a card reading device. The EIR device can be configured to perform outputting raw message data containing an encoded message and/or outputting decoded message data corresponding to an encoded message.

The EIR terminal can be configured to dynamically select a wireless communication network, a wireless communication protocol, and/or a parameter of a wireless communication protocol responsive a user action and/or to scanning a pre-defined bar code.

An encoded information reading (EIR) terminal can comprise a microprocessor electrically coupled to a system bus, a memory communicatively coupled to the microprocessor, an encoded information reading (EIR) device, and a wireless communication interface. The EIR device can be selected from the group consisting of a bar code reading device, an RFID reading device, and a card reading device. The EIR device can be configured to perform outputting raw message data containing an encoded message and/or outputting decoded message data corresponding to an encoded message. The wireless communication interface can comprise a radio frequency front end configured to perform receiving a first radio signal and/or transmitting a second radio signal. The radio frequency front end can be electrically coupled to an analog-to-digital converter (ADC) which can be electrically coupled to the system bus and/or to a digital-to-analog converter (DAC) which can be electrically coupled to the system bus. The microprocessor can be configured to execute a base-band encoder software program and/or a base-band decoder software program. The base-band encoder software program can be configured to produce a first encoded bit stream by performing at least one of the following functions: source encoding of a first bit stream, encryption, channel encoding, multiplexing, modulation, frequency spreading, and media access control. The DAC can be configured to output to the radio frequency front end an analog signal corresponding to the first encoded bit stream. The ADC can be configured to output a second encoded bit stream corresponding to an analog signal produced by the radio frequency front end. The base-band decoder software program can be configured to produce a second bit stream corresponding to the second encoded bit stream by performing at least one of the following functions: media access control, frequency de-spreading, demodulation, de-multiplexing, channel decoding, decryption, and source decoding.

BRIEF DESCRIPTION OF THE DRAWINGS

For the purpose of illustrating the invention, the drawings show aspects of one or more embodiments of the invention. However, it should be understood that the present invention is not limited to the precise arrangements and instrumentalities shown in the drawings, wherein:

FIG. **1** depicts a network level layout of a data collection system employing EIR terminal according to the invention;

FIG. **2** depicts a functional layout of a wireless communication interface;

FIG. **3** depicts a component level layout of an EIR terminal according to the invention;

FIG. **4** illustrates the functions of the base-band encoder software program according to the invention;

FIG. **5** illustrates the functions of the base-band encoder software program according to the invention;

FIGS. **6***a* and **6***b* illustrate an exemplary hand held EIR terminal housing;

FIGS. **7***a*-**7***c* illustrate an exemplary portable and remountable EIR terminal housing;

FIG. **8***a* illustrates a first exemplary deployment of an EIR terminal according to the invention within a retail store;

FIG. **8***b* illustrates a second exemplary deployment of an EIR terminal according to the invention within a retail store;

FIGS. **8***c* and **8***d* illustrate PIN and signature data entry operational modes of an EIR terminal according to the invention.

The drawings are not necessarily to scale, emphasis instead generally being placed upon illustrating the principles of the invention. In the drawings, like numerals are used to indicate like parts throughout the various views.

DETAILED DESCRIPTION OF THE INVENTION

There is provided an encoded information reading (EIR) terminal for incorporation in a data collection system. The data collection system, schematically shown in FIG. **1**, can include a plurality of EIR terminals **100***a*-**100***z* in communication with a plurality of interconnected networks **110***a*-**110***z*. In one aspect, the plurality of networks **110***a*-**110***z* can include at least one IEEE 802.11 conformant wireless network. In another aspect, an EIR terminal **100***a* can be in communication with at least one wireless device over Bluetooth™ wireless communication protocol. In a further aspect, the plurality of networks **110***a*-**110***z* can include at least one GSM wireless network. In a further aspect, the plurality of networks **110***a*-**110***z* can include at least one CDMA wireless network. Still further, the plurality of networks **110***a*-**110***z* can include at least one 3G wireless network, e.g., UMTS, HSUPA/HSDPA, or CDMA2000EvDO. In another aspect, the plurality of networks **110***a*-**110***z* can include at least one 4G wireless network, e.g., LTE, UWB, or 802.16m (WiMax). A skilled artisan would appreciate the fact that wireless networks implementing other wireless communication protocols are within the spirit and the scope of the invention.

In one aspect, an EIR terminal can comprise a wireless communication interface. The EIR terminal **100***c* can establish a communication session with the host computer **171**. In one embodiment, network frames can be exchanged by the EIR terminal **100***c* and the host computer **171** via one or more routers, base stations, and other infrastructure elements. In another embodiment, the host computer **171** can be reachable by the EIR terminal **100***c* via a local area network (LAN). In a yet another embodiment, the host computer **171** can be reachable by the EIR terminal **100***c* via a wide area network (WAN). A skilled artisan would appreciate the fact that other methods of providing interconnectivity between the EIR terminal **100***c* and the host computer **171** relying upon LANs, WANs, virtual private networks (VPNs), and/or other types of network are within the spirit and the scope of the invention.

In a further aspect, the wireless communication interface can be configured to support at least two wireless communication protocols. In one embodiment, the wireless communication interface can be configured to support HSPA/GSM/GPRS/EDGE protocol family and CDMA/EV-DO protocol family. A skilled artisan would appreciate the fact that wire-

less communication interfaces supporting other communication protocols are within the spirit and the scope of the invention.

In one embodiment, the communications between the EIR terminal **100***c* and the host computer **171** can comprise a series of HTTP requests and responses transmitted over one or more TCP connections, although a person skilled in the art would appreciate the fact that using other transport and application level protocols is within the scope and the spirit of the invention.

In one aspect, at least one of the messages transmitted by the EIR terminal can include decoded message data corresponding to, e.g., a bar code label or an RFID label attached to a product or to a shipment item. For example, an EIR terminal can transmit a request to the host computer to retrieve product information corresponding to a product identifier encoded by a bar code label attached to the product, or to transmit an item tracking record for an item identified by a bar code label attached to the product.

A wireless communication interface **210** best viewed in FIG. **2**, can comprise a transmitter circuit **220** electrically coupled to a data source **221**. The transmitter circuit **220** can be implemented by one or more specialized microchips, and can perform the following functions: source encoding **223**, encryption **226**, channel encoding **229**, multiplexing **232**, modulation **235**, and frequency spreading **238**.

The wireless communication interface **210** of FIG. **2** can further comprise a receiver circuit **250** electrically coupled to the data sink **271**. The receiver circuit **250** can be implemented by one or more specialized microchips, and can perform the following functions: frequency de-spreading **253**, demodulation **256**, de-multiplexing **259**, channel decoding **262**, decryption **265**, and source decoding **268**.

Each of the transmitter circuit **220** and receiver circuit **250** can be electrically coupled to a radio frequency (RF) front end **299**. The RF front end **299** can be used to convert high frequency RF signals to/from base-band or intermediate frequency signals. A skilled artisan would appreciate the fact that RF front ends of different data rates, sensitivities, output powers, operating frequencies, and measurement resolutions are within the scope and spirit of the invention.

On the receiving side, the RF front-end **299** can include all filters, low-noise amplifiers (LNAs), and down-conversion mixer(s) needed to process modulated RF signals received by the antenna into based-band signals. In one embodiment, the receiving part of the RF front end **299** can comprise one or more of the following components:

- a first matching circuit to transfer to the next stage the energy received by the antenna;
- a band-pass filter (BPF) to knock down out-of-band jammers;
- a second matching circuit at the input of a low-noise amplifier (LNA);
- the LNA, the primary responsibility of which is to set the sensitivity of the receiver, by providing a high gain;
- a third matching circuit between the LNA output and the receive (RX) mixer (down-converter);
- the down-conversion RX mixer.

On the transmitting side, the RF frond-end area can be described as a "mirrored" version of a receiver. The front end of a transmitter up converts an outgoing base-band signal and then feeds the signal to a high power amplifier. A skilled artisan would appreciate the fact that other ways of implementing the RF front end are within the spirit and the scope of the invention.

According to one embodiment of the invention, the wireless communication interface supporting at least two wireless communication protocols can be implemented using a single dual-protocol (or multi-protocol) chipset. The chipset can include integrated circuits (ICs), application specific integrated circuits (ASICs), and/or other components providing the necessary functionality.

In another embodiment, the wireless communication interface supporting at least two wireless communication protocols can be implemented using two or more chipsets. Each of the chipsets can include integrated circuits (ICs), application specific integrated circuits (ASICs), and/or other components providing the necessary functionality.

In a yet another embodiment, at least some of the functions of the transmitter circuit and the receiver circuit can be advantageously performed by one or more software programs executed by a microprocessor. In one embodiment the EIR terminal **100** can comprise at least one microprocessor **310** and a memory **320**, both coupled to the system bus **370**, as best viewed in FIG. **3**.

The microprocessor **310** can be provided by a general purpose microprocessor or by a specialized microprocessor (e.g., an ASIC). In one embodiment, the EIR terminal **100** can comprise a single microprocessor which can be referred to as a central processing unit (CPU) and which can perform at least some of the functions of the transmitter circuit and the receiver circuit. In another embodiment, the EIR terminal **100** can comprise two or more microprocessors; for example, a CPU providing some or most of the EIR functionality and a specialized microprocessor performing some of the functions of the transmitter circuit and the receiver circuit. A skilled artisan would appreciate the fact that different schemes of processing tasks distribution among the two or more microprocessors are within the spirit and the scope of the invention.

The EIR terminal **100** can further comprise one or more encoded information reading (EIR) devices **330**, including a bar code reading device, an RFID reading device, and a card reading device, also coupled to the system bus **370**. In one embodiment, an EIR reading device can be capable of outputting decoded message data corresponding to an encoded message. In another embodiment, the EIR reading device can output raw message data containing an encoded message, e.g., raw image data or raw RFID data.

Of course, devices that read bar codes, read RFID, or read cards bearing encoded information may read more than one of these categories while remaining within the scope of the invention. For example, a device that reads bar codes may include a card reader, and/or RFID reader; a device that reads RFID may also be able to read bar codes and/or cards; and a device that reads cards may be able to also read bar codes and/or RFID. For further clarity, it is not necessary that a device's primary function involve any of these functions in order to be considered such a device; for example, a cellular telephone, smartphone, or PDA that is capable of reading bar codes is a device that reads bar codes for purposes of the present invention

The EIR terminal **100** can further comprise a keyboard interface **354** and a display adapter **355**, both also coupled to the system bus **370**. The EIR terminal **100** can further comprise a battery **356**.

In a further aspect, the EIR terminal **100** can further comprise an RF front end **340**. In a further aspect, the EIR terminal **100** can further comprise an analog-to-digital (ADC) converter **350**, the input of which can be electrically coupled to the RF front end **340**. The choice of ADC can be determined by the receiver architecture, and can depend upon the selectivity of the filters, the dynamic range afforded by the front-end amplifiers, and the bandwidth and type of modulation to be processed. For example, the level or dynamic range of

signals expected to be presented to the ADC will dictate the bit resolution needed for the converter. An ADC can also be specified in terms of its spurious-free dynamic range (SFDR). The ADC's sensitivity can be influenced by wideband noise, including spurious noise, and can be improved through the use of an anti-aliasing filter at the input of the ADC to eliminate sampling of noise and high-frequency spurious products. To avoid aliasing when converting analog signals to the digital domain, the ADC sampling frequency must be at least twice the maximum frequency of the input analog signal. This minimum sampling condition derived from Nyquist's theorem, must be met in order to capture enough information about the input analog waveform to reconstruct it accurately. In addition to selecting an ADC for IF or baseband sampling, the choice of buffer amplifier to feed the input of the converter can affect the performance possible with a given sampling scheme. The buffer amplifier should provide the rise/fall time and transient response to preserve the modulation information of the IF or base-band signals, while also providing the good amplitude accuracy and flatness needed to provide signal amplitudes at an optimum input level to the ADC for sampling.

In another embodiment, the EIR terminal **100** can further comprise a digital-to-analog (DAC) converter **360**, the output of which can be electrically coupled to the RF front end **340**. In a further aspect, a DAC can be viewed as a component providing a function reversed to that of an ADC.

In a further aspect, the output of the ADC **350**, and the input of the DAC **360** can be electrically coupled to a system bus **370**. A skilled artisan would appreciate the fact that other microprocessors, memory, and/or peripheral devices can be electrically coupled to the system bus **370** without departing from the scope and the spirit of the invention.

In another aspect, the microprocessor **310** can execute a base-band encoder software program which can encode a bit stream which needs to be transmitted over a wireless medium. The encoded bit stream outputted by the base-band encoder software program can be fed to the input of the DAC **360**. The analog signal representative of the encoded bit stream can be outputted by the DAC **360** to the RF front end **340** in order to be transmitted over a wireless medium.

In one embodiment, the base-band encoder software program **400** can perform at least one of the following functions schematically shown in FIG. **4**: source encoding **410** of a bit stream **405**, encryption **420**, channel encoding **430**, multiplexing **440**, modulation **450**, frequency spreading **460**, and media access control **470**. In one embodiment, the remaining functions (i.e., those not implemented by the base-band encoder software program) can be implemented by one or more dedicated hardware components.

In one aspect, the source encoding function **410** can be provided by a process of encoding information using a different number of bits (or other information bearing units) than an un-encoded representation would use, through use of specific encoding schemes.

In another aspect, the encryption function **420** can be implemented by using an algorithm (cipher) suitable to transform an unencrypted ("plain text") information stream to an encrypted information stream.

In a further aspect, the channel encoding function **430** can be provided by a process suitable to encode the transmitted information stream into a form, which would allow guaranteed reliable information transmission at a rate close to the maximum channel capacity. According to the Shannon theorem, for a given bandwidth and signal-to-noisy ratio, the theoretical maximum channel capacity (reliable information transfer rate) for a particular noise level is defined by the following equation:

$$C = B\log_2\left(1 + \frac{S}{N}\right).$$

For any information transmission rate R<C, there exists an encoding scheme that would allow the probability of errors at the receiver to be made less than a pre-defined value ϵ. The channel encoding function **430** can select and/or implement an encoding scheme for a pre-defined value of ϵ.

In a further aspect, the multiplexing function **440** can be employed to combine multiple signals or data streams into one signal transmitted over a shared physical transmission medium (wireless channel). The multiplexing function **440** can implement one or more of the multiplexing technologies including TDMA (Time division multiple access), FDMA (Frequency division multiple access), CDMA (Code division multiple access), CSMA (Carrier sense multiple access), etc.

In a further aspect, the frequency spreading function **460** can implement one or more of the following technologies: DSSS (Direct Sequence Spread Spectrum), FHSS (Frequency Hopping Spread Spectrum), and OFDM (Orthogonal Frequency Division Multiplexing).

In a further aspect, the media access control function **470** can provide addressing and channel access control mechanisms.

In another aspect, the RF front end **340** can output to the ADC **350** an analog signal representative of a signal received over the wireless medium. The ADC **350** can output a digital signal representative of the analog signal outputted by the RF front end **340**. The microprocessor **310** can execute a base-band decoder software program which can input the digital signal outputted by the ADC **350** and can decode the digital signal into a form suitable for further processing by other software programs.

In a further aspect, the base-band decoder software program **500** can perform at least at least one of the following functions schematically shown in FIG. **5**: media access control **510**, frequency de-spreading **520**, de-modulation **530**, de-multiplexing **540** the analog signal, channel decoding **560**, decryption **570**, and source decoding **580**. In one embodiment, the remaining functions (i.e., those not implemented by the base-band decoder software program) can be implemented by one or more dedicated hardware components.

In one aspect, each of the frequency de-spreading **520**, de-modulation **530**, de-multiplexing **540**, channel decoding **560**, decryption **570**, and source decoding **580** functions can be implemented as a reverse function of the frequency spreading **460**, modulation **450**, multiplexing **440**, channel encoding **430**, encryption **420**, source encoding **410** functions, respectively.

In another aspect, the base-band encoder software program can be implemented as two or more software programs. In another aspect, the base-band decoder software program can be implemented as two or more software programs. In a further aspect, the base-band encoder software program and the base-band decoder software program can be implemented as a single software program.

In another aspect, due to advantageously performing at least some of the source bit stream encoding functions by a software program, the EIR terminal **100** can be devoid of dedicated hardware components configured to implement at least one of the following functions: source encoding of said

first bit stream, encryption, channel encoding, multiplexing, modulation, frequency spreading, and media access control.

In another aspect, due to advantageously performing at least some of the analog signal decoding functions by a software program, the EIR terminal **100** can be devoid of dedicated hardware components configured to implement at least one of the following functions: media access control, frequency de-spreading, de-modulation, de-multiplexing, channel decoding, decryption, and source decoding.

In a further aspect, the EIR terminal **100** can be configured to dynamically select a wireless communication network, a wireless communication protocol, or one or more parameters of the wireless communication protocol (e.g., frequency or transmission power) to be used by the RF front end **340**.

Due to its ability to dynamically select a wireless communication network and a wireless communication protocol, the EIR terminal **100** according to the present invention can be advantageously used, e.g., by a company operating in several geographies with different wireless communication standards. Using the EIR terminal **100** according to the present invention would allow such a company to deploy the same EIR terminal **100** model in all the geographies.

In one embodiment, selection of a wireless communication network, a wireless communication protocol, or one or more parameters of a wireless communication protocol can be performed manually by the user of the EIR terminal **100**. In one embodiment, the selection can be performed by scanning a pre-defined bar code. In another embodiment, the selection can be performed by the user interacting with the user interface (e.g., via a graphical user interface (GUI), or via a hardware-implemented control). A skilled artisan would appreciate the fact that other methods of manually selecting a wireless communication network, a wireless communication protocol, or one or more parameters of the wireless communication protocol are within the scope and the spirit of the invention.

In another embodiment, selection of a wireless communication network, a wireless communication protocol, or one or more parameters of the wireless communication protocol can be performed by a wireless communication protocol selector software program executed by the EIR terminal **100**. The wireless communication protocol selector software program can optimize a value of a user-defined criterion.

In one embodiment, the value of the user-defined criterion can be calculated based on one or more of the following parameters: frequency range, network status, signal strength, service cost, communication channel throughput, and user preferences. The user preferences can be represented, e.g., by network preference, service preference, protocol preference, or frequency preference. A skilled artisan would appreciate the fact that other types of user preferences are within the spirit and the scope of the invention.

In one embodiment, the value of the user-defined criterion can be calculated as a weighted sum of components each of which is represented by either a parameter itself (e.g., the signal strength) or a difference between the value of a parameter and the desired value of the parameter (e.g., communication channel throughput). In another embodiment, the value of the user-defined criterion can be calculated as a square root of a weighted sum of squares of components each of which is represented by either a parameter itself (e.g., the signal strength) or a difference between the value of a parameter and the desired value of the parameter (e.g., communication channel throughput). A skilled artisan would appreciate the fact that other methods of calculating the user-defined criterion value are within the scope and spirit of the invention.

For example, if a user is more concerned about the cost than about other communication parameters, the user would want the user-defined criterion to yield the cheapest covered service provider (while the bandwidth, frequency range, and/or network protocol can possibly be secondary factors affecting the service provider and/or network selection). In another example, if a user is more concerned about the signal quality than about other communication parameters, the user would want the user-defined criterion to yield the network with best quality (while the cost can be a secondary factor affecting the service provider and/or network selection). In a yet another example, if a user is more concerned about maintaining uninterrupted communication session than about other communication parameters, the user would want the user-defined criterion to yield the network with best connection reliability (while the bandwidth, frequency range, and/or network protocol can possibly be secondary factors affecting the service provider and/or network selection). A skilled artisan would appreciate the fact that other methods of defining the user-defined criterion are within the scope and the spirit of the invention.

In one embodiment, the EIR terminal **100** can be configured to search beacon signals over a pre-defined frequency range (e.g., between 800 MHz and 5 GHz), and then select a wireless communication network and/or frequency channel which would produce the optimal value of the user-defined criterion.

In one embodiment, the value of the user-defined criterion can be calculated immediately before the EIR terminal **100** attempts to initiate a communication session, so that a wireless communication network and/or a wireless communication protocol can be chosen which would optimize the user-defined criterion.

In another embodiment, the value of the user-defined criterion can be calculated periodically at established time intervals so that the EIR terminal **100** can change the wireless communication network and/or the wireless communication protocol between communication sessions or during a communication session if a wireless communication network and/or a wireless communication protocol is detected yielding a value of the user-defined criterion which is closer to the optimum than that of the current network or protocol. In yet another embodiment, the value of a user-defined criterion can be calculated responsive to a pre-defined event (e.g., the signal quality falling below a pre-defined level, or the signal quality exceeding a pre-defined threshold), so that the EIR terminal **100** can automatically (i.e., without user intervention) change the wireless communication network and/or the wireless communication protocol between communication sessions or during a communication session. Thus, the EIR terminal **100** can always maintain a network connection irrespectively of changing external conditions (e.g., when the terminal is physically moved).

Form factors and housings for the EIR terminal **100** according to the invention are now being described. The components of EIR terminal **100** can be incorporated into a variety of different housings. As indicated by the embodiment of FIGS. **6***a* and **6***b*, the components of FIG. **5** can be incorporated into a hand held housing **101**. EIR terminal **100** of FIGS. **6***a* and **6***b* is in the form factor of a hand held portable data terminal. EIR terminal **100** as shown in FIGS. **6***a* and **6***b* includes a keyboard **1090**, a display **504** having an associated touch screen overlay, a card reader **1348**, and an imaging module **360** which includes the components of imaging assembly as described herein; namely, image sensor array incorporated on an image sensor IC chip. Imaging module **360** has an associated imaging axis, a_i. As indicated by the

side view of FIG. **6***b*, the components of the block diagram of FIG. **5** may be supported within housing **101** on a plurality of circuit boards **1077**. Imaging module **360** may include an image sensor array having color sensitive pixels as described in U.S. Provisional Patent Application Nos. 60/687,606, filed Jun. 3, 2005, 60/690,268, filed Jun. 14, 2005, 60/692,890, filed Jun. 22, 2005, and 60/694,371, filed Jun. 27, 2005, all of which are entitled Digital Picture Taking Optical Reader Having Hybrid Monochrome And Color Image Sensor, and all of which are incorporated herein by reference.

In the embodiment of FIGS. **7***a*-**7***c*, the EIR terminal **100** is in the form of a transaction terminal which may be configured as a retail purchase transaction terminal or as a price verifier. Housing **102** of the transaction terminal shown in FIGS. **7***a*-**7***c* is configured to be portable so that it can be moved from location to location and is further configured to be replaceably mounted on a fixed structure such as a fixed structure of a cashier station or a fixed structure of the retail store floor (e.g., a shelf, a column **264** best viewed in FIG. **8***b*). Referring to bottom view of FIG. **7***c*, the housing **102** of the EIR terminal **100** has formations **268** facilitating the replaceable mounting of EIR terminal **100** on a fixed structure. Referring now to FIG. **7***b*, EIR terminal **100** includes a display **504** having an associated touch screen **504**T, a card reader **1348**, an imaging module **360**, and a luminous shroud **362**. When light from the illumination block (not shown in FIG. **8**) strikes luminous shroud **362**, the shroud glows to attract attention to the location of imaging assembly. In certain operating modes as indicated in FIG. **8***c*, the EIR terminal **100** in accordance with any of FIGS. **7***a*-**7***c*, displays on display **504** a PIN entry screen prompting a customer to enter PIN information into touch screen **504**T. In other operating modes, as indicated in FIG. **8***d*, the EIR terminal **100** displays on display **504** a signature prompt screen prompting a customer to enter signature information into the device with use of a stylus **505**.

Referring to FIGS. **8***a* and **8***b*, various installation configurations for the EIR terminal of FIGS. **7***a*-**7***c* are shown. In the view of FIG. **8***a*, the EIR terminal **100** is installed as a retail purchase transaction terminal at a point of sale cashier station. In the setup of FIG. **8***a*, the EIR terminal **100** is configured as a retail purchase transaction terminal and is utilized to aid and facilitate retail transactions at a point of sale. A customer may enter a credit card or a debit card into card reader **1348** and retail purchase transaction terminal may transmit the credit card information to credit/debit authorization network.

In the view of FIG. **8***b*, the EIR terminal **100** is configured as a price verifier to aid customers in checking prices of products located on a store floor. EIR terminal **100** may be mounted on a shelf (not shown in FIG. **8***b*) or on a column **254** or other fixed structure of the retail store. EIR terminal **100** may decode bar code data from bar codes on store products and transmit decoded out bar code messages to a store server for lookup of price information which is sent back from the store server to terminal **100** for display on display **504**.

While the present invention has been particularly shown and described with reference to certain exemplary embodiments, it will be understood by one skilled in the art that various changes in detail may be affected therein without departing from the spirit and scope of the invention as defined by claims that can be supported by the written description and drawings. Further, where exemplary embodiments are described with reference to a certain number of elements it will be understood that the exemplary embodiments can be practiced utilizing less than the certain number of elements.

A small sample of systems methods and apparatus that are described herein is as follows:

A1. An encoded information reading (EIR) terminal comprising:

a microprocessor electrically coupled to a system bus;

a memory communicatively coupled to said microprocessor;

an encoded information reading (EIR) device selected from the group consisting of a bar code reading device, an RFID reading device, and a card reading device, said EIR device configured to perform at least one of outputting raw message data containing an encoded message and outputting decoded message data corresponding to an encoded message; and

a wireless communication interface comprising a radio frequency front end configured to perform at least one of receiving a first radio signal and transmitting a second radio signal, said radio frequency front end electrically coupled to at least one of an analog-to-digital converter (ADC) electrically coupled to said system bus and a digital-to-analog converter (DAC) electrically coupled to said system bus;

wherein said microprocessor is configured to execute at least one of a base-band encoder software program and a base-band decoder software program;

wherein said base-band encoder software program is configured to produce a first encoded bit stream by performing at least one of the following functions: source encoding of a first bit stream, encryption, channel encoding, multiplexing, modulation, frequency spreading, and media access control;

wherein said DAC is configured to output to said radio frequency front end an analog signal corresponding to said first encoded bit stream;

wherein said ADC is configured to output a second encoded bit stream corresponding to an analog signal produced by said radio frequency front end; and

wherein said base-band decoder software program is configured to produce a second bit stream corresponding to said second encoded bit stream by performing at least one of the following functions: media access control, frequency de-spreading, de-modulation, de-multiplexing, channel decoding, decryption, and source decoding.

A2. The EIR terminal of claim A1, wherein said EIR terminal is devoid of dedicated hardware components configured to implement at least one of the following functions: source encoding of said first bit stream, encryption, channel encoding, multiplexing, modulation, frequency spreading, media access control, frequency de-spreading, de-modulation, de-multiplexing, channel decoding, decryption, and source decoding.

A3. The EIR terminal of claim A1, wherein said base-band encoder software program and said base-band decoder software program are implemented as a single software program.

A4. The EIR terminal of claim A1, wherein said base-band encoder software program is performed by at least one of a general purpose microprocessor, a specialized microprocessor.

A5. The EIR terminal of claim A1, wherein said base-band decoder software program is performed by at least one of a general purpose microprocessor, a specialized microprocessor.

A6. The EIR terminal of claim A1 further comprising a central processing unit (CPU);

wherein said base-band encoder software program is performed by at least one of said CPU, a specialized microprocessor.

A7. The EIR terminal of claim A1 further comprising a central processing unit (CPU);

wherein said base-band decoder software program is performed by at least one of said CPU, a specialized microprocessor.

A8. The EIR terminal of claim A1 further comprising a wireless communication protocol selector software program, said wireless communication protocol software program configured to optimize a value of a user-defined criterion in order to dynamically select at least one of a wireless communication network, a wireless communication protocol, and a parameter of a wireless communication protocol.

A9. The EIR terminal of claim A1 further comprising a wireless communication protocol selector software program, said wireless communication protocol software program configured to optimize a value of a user-defined criterion in order to dynamically select at least one of a wireless communication network, a wireless communication protocol, and a parameter of a wireless communication protocol;

wherein said value of said user-defined criterion is calculated based on at least one of network status, communication quality, signal strength, service cost, bandwidth, a user preference, and communication channel throughput.

A10. The EIR terminal of claim A1 further comprising a wireless communication protocol selector software program, said wireless communication protocol software program configured to optimize a value of a user-defined criterion in order to dynamically select at least one of a wireless communication network, a wireless communication protocol, and a parameter of a wireless communication protocol;

wherein said value of said user-defined criterion is calculated as a weighted sum of components, at least one of said components represented by at least one of a network status, communication quality, signal strength, service cost, bandwidth, a user preference, and communication channel throughput.

A11. The EIR terminal of claim A1 further comprising a wireless communication protocol selector software program, said wireless communication protocol software program configured to optimize a value of a user-defined criterion in order to dynamically select at least one of a wireless communication network, a wireless communication protocol, and a parameter of a wireless communication protocol;

wherein said value of said user-defined criterion is calculated as a weighted sum of components, at least one of said components represented by a difference between an actual value and a desired value of at least one of a network status, communication quality, signal strength, service cost, bandwidth, and communication channel throughput.

A12. The EIR terminal of claim A1 further comprising a wireless communication protocol selector software program, said wireless communication protocol software program configured to optimize a value of a user-defined criterion in order to dynamically select at least one of a wireless communication network, a wireless communication protocol, and a parameter of a wireless communication protocol;

wherein said value of said user-defined criterion is calculated as a square root of a weighted sum of squares of components, at least one of said components represented by at least one of a network status, communication quality, signal strength, service cost, bandwidth, a user preference, and communication channel throughput.

A13. The EIR terminal of claim A1 further comprising a wireless communication protocol selector software program, said wireless communication protocol software program configured to optimize a value of a user-defined criterion in order to dynamically select at least one of a wireless communication network, a wireless communication protocol, and a parameter of a wireless communication protocol;

wherein said value of said user-defined criterion is calculated as a square root of a weighted sum of squares of components, at least one of said components represented by a difference between an actual value and a desired value of at least one of network status, communication quality, signal strength, service cost, bandwidth, a user preference, and communication channel throughput.

A14. The EIR terminal of claim A1 further comprising a wireless communication protocol selector software program, said wireless communication protocol software program configured to optimize a value of a user-defined criterion in order to dynamically select at least one of a wireless communication network, a wireless communication protocol, and a parameter of a wireless communication protocol;

wherein said EIR terminal is configured to search beacon signals over a pre-defined frequency range, and then select at least one of a wireless communication network and frequency channel which optimizes said user-defined criterion.

A15. The EIR terminal of claim A1 further comprising a wireless communication protocol selector software program, said wireless communication protocol software program configured to optimize a value of a user-defined criterion in order to dynamically select at least one of a wireless communication network, a wireless communication protocol, and a parameter of a wireless communication protocol;

wherein said EIR terminal is configured to evaluate said user-defined criterion before attempting to initiate a communication session.

A16. The EIR terminal of claim A1 further comprising a wireless communication protocol selector software program, said wireless communication protocol software program configured to optimize a value of a user-defined criterion in order to dynamically select at least one of a wireless communication network, a wireless communication protocol, and a parameter of a wireless communication protocol;

wherein said EIR terminal is configured to switch at least one of said wireless communication network and said wireless communication protocol responsive to evaluating said user-defined criterion.

A17. The EIR terminal of claim A1 further comprising a wireless communication protocol selector software program, said wireless communication protocol software program configured to optimize a value of a user-defined criterion in order to dynamically select at least one of a wireless communication network, a wireless communication protocol, and a parameter of a wireless communication protocol;

wherein said EIR terminal is configured to evaluate said user-defined criterion responsive to a pre-defined event.

A18. The EIR terminal of claim A1 further comprising a wireless communication protocol selector software program, said wireless communication protocol software program configured to optimize a value of a user-defined criterion in order to dynamically select at least one of a wireless communication network, a wireless communication protocol, and a parameter of a wireless communication protocol;

wherein said EIR terminal is configured to periodically evaluate said user-defined criterion.

A19. The EIR terminal of claim A1 further configured to dynamically select at least one of a wireless communication network, a wireless communication protocol, and a parameter of a wireless communication protocol responsive to a user action.

A20. The EIR terminal of claim A1 further configured to dynamically select at least one of a wireless communication network, a wireless communication protocol, and a parameter of a wireless communication protocol responsive to scanning a pre-defined bar code.

B1. An encoded information reading terminal comprising:

a microprocessor electrically coupled to a system bus;

a memory communicatively coupled to said microprocessor;

an encoded information reading (EIR) device selected from the group consisting of a bar code reading device, an RFID reading device, and a card reading device, said EIR device configured to perform at least one of outputting raw message data containing an encoded message and outputting decoded message data corresponding to an encoded message; and

a wireless communication interface comprising an RF front end configured to perform at least one of receiving a first radio signal and transmitting a second radio signal, said RF front end electrically coupled to at least one of an analog-to-digital converter (ADC) electrically coupled to said system bus and a digital-to-analog converter (DAC) electrically coupled to said system bus;

wherein said microprocessor is configured to execute at least one of a base-band encoder software program and a base-band decoder software program;

wherein said EIR terminal is configured to execute a wireless communication protocol selector software program, said wireless communication protocol selector software program configured optimize a value of a user-defined criterion in order to dynamically select at least one of a wireless communication network, a wireless communication protocol, and a parameter of a wireless communication protocol.

B2. The EIR terminal of claim B1, wherein said base-band encoder software program and said base-band decoder software program are implemented as a single software program.

B3. The EIR terminal of claim B1, wherein said base-band encoder software program is performed by at least one of a general purpose microprocessor, a specialized microprocessor.

B4. The EIR terminal of claim B1, wherein said base-band decoder software program is performed by at least one of a general purpose microprocessor, a specialized microprocessor.

B5. The EIR terminal of claim B1 further comprising a central processing unit (CPU);

wherein said base-band encoder software program is performed by at least one of said CPU, a specialized microprocessor.

B6. The EIR terminal of claim B1 further comprising a central processing unit (CPU);

wherein said base-band decoder software program is performed by at least one of said CPU, a specialized microprocessor.

B7. The EIR terminal of claim B1, wherein said value of said user-defined criterion is calculated based on at least one of network status, communication quality, signal strength, service cost, bandwidth, a user preference, and communication channel throughput.

B8. The EIR terminal of claim B1, wherein said value of said user-defined criterion is calculated as a weighted sum of components, at least one of said components represented by at least one of network status, communication quality, signal strength, service cost, bandwidth, a user preference, and communication channel throughput.

B9. The EIR terminal of claim B1, wherein said value of said user-defined criterion is calculated as a weighted sum of components, at least one of said components represented by a difference between an actual value and a desired value of at least one of network status, communication quality, signal strength, service cost, bandwidth, and communication channel throughput.

B10. The EIR terminal of claim B1, wherein said value of said user-defined criterion is calculated as a square root of a weighted sum of squares of components, at least one of said components represented by at least one of network status, communication quality, signal strength, service cost, bandwidth, a user preference, and communication channel throughput.

B11. The EIR terminal of claim B1, wherein said value of said user-defined criterion is calculated as a square root of a weighted sum of squares of components, at least one of said components represented by a difference between an actual value and a desired value of at least one of network status, communication quality, signal strength, service cost, bandwidth, a user preference, and communication channel throughput.

B12. The EIR terminal of claim B1, wherein said EIR terminal is configured to search beacon signals over a pre-defined frequency range, and then select at least one of a wireless communication network and frequency channel which optimizes said user-defined criterion.

B13. The EIR terminal of claim B1, wherein said EIR terminal is configured to evaluate said user-defined criterion before attempting to initiate a communication session.

B14. The EIR terminal of claim B1, wherein said EIR terminal is configured to switch at least one of said wireless communication network and said wireless communication protocol responsive to evaluating said user-defined criterion.

B15. The EIR terminal of claim B1, wherein said EIR terminal is configured to evaluate said user-defined criterion responsive to a pre-defined event.

B16. The EIR terminal of claim B1 further configured to periodically evaluate said user-defined criterion.

B17. The EIR terminal of claim B1 further configured to dynamically select at least one of a wireless communication network, a wireless communication protocol, and a parameter of a wireless communication protocol responsive to a user action.

B18. The EIR terminal of claim B1 further configured to dynamically select at least one of a wireless communication network, a wireless communication protocol, and a parameter of a wireless communication protocol responsive to scanning a pre-defined bar code.

C1. An encoded information reading terminal comprising:

a microprocessor electrically coupled to a system bus;

a memory communicatively coupled to said microprocessor;

an encoded information reading (EIR) device selected from the group consisting of a bar code reading device, an RFID reading device, and a card reading device, said EIR device configured to perform at least one of outputting raw message data containing an encoded message and outputting decoded message data corresponding to an encoded message; and

a wireless communication interface comprising an RF front end configured to perform at least one of receiving a first radio signal and transmitting a second radio signal, said RF front end electrically coupled to at least one of an analog-to-digital converter (ADC) electrically coupled to said system bus and a digital-to-analog converter (DAC) electrically coupled to said system bus;

wherein said microprocessor is configured to execute at least one of a base-band encoder software program and a base-band decoder software program;

wherein said EIR terminal is configured to dynamically select at least one of a wireless communication network, a wireless communication protocol, and a parameter of a wire-

less communication protocol responsive to at least one of a user action, scanning a pre-defined bar code.

C2. The EIR terminal of claim C1, wherein said base-band encoder software program is performed by at least one of a general purpose microprocessor, a specialized microprocessor.

C3. The EIR terminal of claim C1, wherein said base-band decoder software program is performed by at least one of a general purpose microprocessor, a specialized microprocessor.

C4. The EIR terminal of claim C1 further comprising a central processing unit (CPU);

wherein said base-band encoder software program is performed by at least one of said CPU, a specialized microprocessor.

C5. The EIR terminal of claim C1 further comprising a central processing unit (CPU);

wherein said base-band decoder software program is performed by at least one of said CPU, a specialized microprocessor.

D1. An encoded information reading terminal comprising:

a microprocessor electrically coupled to a system bus;

a memory communicatively coupled to said microprocessor;

an encoded information reading (EIR) device selected from the group consisting of a bar code reading device, an REID reading device, and a card reading device, said EIR device configured to perform at least one of outputting raw message data containing an encoded message and outputting decoded message data corresponding to an encoded message; and

a wireless communication interface configured to support at least two wireless communication protocols;

wherein said EIR terminal is configured to execute a wireless communication protocol selector software program, said wireless communication protocol selector software program configured optimize a value of a user-defined criterion in order to dynamically select at least one of a wireless communication network, a wireless communication protocol, and a parameter of a wireless communication protocol.

D2. The EIR terminal of claim D1, wherein said wireless communication interface is implemented using a single multi-protocol chipset.

D3. The EIR terminal of claim D1, wherein said wireless communication interface is implemented using two or more chipsets.

D4. The EIR terminal of claim D1, wherein said value of said user-defined criterion is calculated based on at least one of network status, communication quality, signal strength, service cost, bandwidth, a user preference, and communication channel throughput.

D5. The EIR terminal of claim D1, wherein said value of said user-defined criterion is calculated as a weighted sum of components, at least one of said components represented by at least one of network status, communication quality, signal strength, service cost, bandwidth, a user preference, and communication channel throughput.

D6. The EIR terminal of claim D1, wherein said value of said user-defined criterion is calculated as a weighted sum of components, at least one of said components represented by a difference between an actual value and a desired value of at least one of network status, communication quality, signal strength, service cost, bandwidth, and communication channel throughput.

D7. The EIR terminal of claim D1, wherein said value of said user-defined criterion is calculated as a square root of a weighted sum of squares of components, at least one of said components represented by at least one of network status, communication quality, signal strength, service cost, bandwidth, a user preference, and communication channel throughput.

D8. The EIR terminal of claim D1, wherein said value of said user-defined criterion is calculated as a square root of a weighted sum of squares of components, at least one of said components represented by a difference between an actual value and a desired value of at least one of network status, communication quality, signal strength, service cost, bandwidth, a user preference, and communication channel throughput.

D9. The EIR terminal of claim D1, wherein said EIR terminal is configured to search beacon signals over a pre-defined frequency range, and then select at least one of a wireless communication network and frequency channel which optimizes said user-defined criterion.

D10. The EIR terminal of claim D1, wherein said EIR terminal is configured to evaluate said user-defined criterion before attempting to initiate a communication session.

D11. The EIR terminal of claim D1, wherein said EIR terminal is configured to switch at least one of said wireless communication network and said wireless communication protocol responsive to evaluating said user-defined criterion.

D12. The EIR terminal of claim D1, wherein said EIR terminal is configured to evaluate said user-defined criterion responsive to a pre-defined event.

D13. The EIR terminal of claim D1 further configured to periodically evaluate said user-defined criterion.

D14. The EIR terminal of claim D1 further configured to dynamically select at least one of a wireless communication network, a wireless communication protocol, and a parameter of a wireless communication protocol responsive to a user action.

D15. The EIR terminal of claim D1 further configured to dynamically select at least one of a wireless communication network, a wireless communication protocol, and a parameter of a wireless communication protocol responsive to scanning a pre-defined bar code.

E1. An encoded information reading terminal comprising:

a microprocessor electrically coupled to a system bus;

a memory communicatively coupled to said microprocessor;

an encoded information reading (EIR) device selected from the group consisting of a bar code reading device, an REID reading device, and a card reading device, said EIR device configured to perform at least one of outputting raw message data containing an encoded message and outputting decoded message data corresponding to an encoded message; and

a wireless communication interface configured to support at least two wireless communication protocols;

wherein said EIR terminal is configured to dynamically select at least one of a wireless communication network, a wireless communication protocol, and a parameter of a wireless communication protocol responsive to at least one of a user action, scanning a pre-defined bar code.

E2. The EIR terminal of claim E1, wherein said wireless communication interface is implemented using a single multi-protocol chipset.

E3. The EIR terminal of claim E1, wherein said wireless communication interface is implemented using two or more chipsets.

We claim:

1. An encoded information reading (EIR) terminal comprising:

a microprocessor electrically coupled to a system bus;

a memory communicatively coupled to said microprocessor;

an encoded information reading (EIR) device selected from the group consisting of a bar code reading device, an RFID reading device, and a card reading device, said EIR device configured to perform at least one of outputting raw message data containing an encoded message and outputting decoded message data corresponding to an encoded message; and

a wireless communication interface comprising a radio frequency front end configured to perform at least one of receiving a first radio signal and transmitting a second radio signal, said radio frequency front end electrically coupled to at least one of an analog-to-digital converter (ADC) electrically coupled to said system bus and a digital-to-analog converter (DAC) electrically coupled to said system bus;

wherein said microprocessor is configured to execute at least one of a base-band encoder software program and a base-band decoder software program;

wherein said base-band encoder software program is configured to produce a first encoded bit stream by performing at least one of the following functions: source encoding of a first bit stream, encryption, channel encoding, multiplexing, modulation, frequency spreading, and media access control;

wherein said DAC is configured to output to said radio frequency front end an analog signal corresponding to said first encoded bit stream;

wherein said ADC is configured to output a second encoded bit stream corresponding to an analog signal produced by said radio frequency front end; and

wherein said base-band decoder software program is configured to produce a second bit stream corresponding to said second encoded bit stream by performing at least one of the following functions: media access control, frequency de-spreading, de-modulation, de-multiplexing, channel decoding, decryption, and source decoding.

2. The EIR terminal of claim 1, wherein said EIR terminal is devoid of dedicated hardware components configured to implement at least one of the following functions: source encoding of said first bit stream, encryption, channel encoding, multiplexing, modulation, frequency spreading, media access control, frequency de-spreading, de-modulation, de-multiplexing, channel decoding, decryption, and source decoding.

3. The EIR terminal of claim 1, further comprising a wireless communication protocol selector software program, said wireless communication protocol software program configured to optimize a value of a user-defined criterion in order to dynamically select at least one of a wireless communication network, a wireless communication protocol, and a parameter of a wireless communication protocol.

4. The EIR terminal of claim 1, further comprising a wireless communication protocol selector software program, said wireless communication protocol software program configured to optimize a value of a user-defined criterion in order to dynamically select at least one of a wireless communication network, a wireless communication protocol, and a parameter of a wireless communication protocol;

wherein said value of said user-defined criterion is calculated based on at least one of network status, communication quality, signal strength, service cost, bandwidth, a user preference, and communication channel throughput.

5. The EIR terminal of claim 1, further comprising a wireless communication protocol selector software program, said wireless communication protocol software program configured to optimize a value of a user-defined criterion in order to dynamically select at least one of a wireless communication network, a wireless communication protocol, and a parameter of a wireless communication protocol;

wherein said EIR terminal is configured to search beacon signals over a pre-defined frequency range, and then select at least one of a wireless communication network and frequency channel which optimizes said user-defined criterion.

6. The EIR terminal of claim 1, further comprising a wireless communication protocol selector software program, said wireless communication protocol software program configured to optimize a value of a user-defined criterion in order to dynamically select at least one of a wireless communication network, a wireless communication protocol, and a parameter of a wireless communication protocol;

wherein said EIR terminal is configured to switch at least one of said wireless communication network and said wireless communication protocol responsive to evaluating said user-defined criterion.

7. The EIR terminal of claim 1, further configured to dynamically select at least one of a wireless communication network, a wireless communication protocol, and a parameter of a wireless communication protocol responsive to a user action.

8. The EIR terminal of claim 1, further configured to dynamically select at least one of a wireless communication network, a wireless communication protocol, and a parameter of a wireless communication protocol responsive to scanning a pre-defined bar code.

9. An encoded information reading terminal comprising:

a microprocessor electrically coupled to a system bus;

a memory communicatively coupled to said microprocessor;

an encoded information reading (EIR) device selected from the group consisting of a bar code reading device, an RFID reading device, and a card reading device, said EIR device configured to perform at least one of outputting raw message data containing an encoded message and outputting decoded message data corresponding to an encoded message; and

a wireless communication interface comprising an RF front end configured to perform at least one of receiving a first radio signal and transmitting a second radio signal, said RF front end electrically coupled to at least one of an analog-to-digital converter (ADC) electrically coupled to said system bus and a digital-to-analog converter (DAC) electrically coupled to said system bus;

wherein said microprocessor is configured to execute at least one of a base-band encoder software program and a base-band decoder software program;

wherein said EIR terminal is configured to execute a wireless communication protocol selector software program, said wireless communication protocol selector software program configured optimize a value of a user-defined criterion in order to dynamically select at least one of a wireless communication network, a wireless communication protocol, and a parameter of a wireless communication protocol.

10. The EIR terminal of claim 9, wherein said value of said user-defined criterion is calculated based on at least one of

network status, communication quality, signal strength, service cost, bandwidth, a user preference, and communication channel throughput.

11. The EIR terminal of claim **9**, wherein said EIR terminal is configured to search beacon signals over a pre-defined frequency range, and then select at least one of a wireless communication network and frequency channel which optimizes said user-defined criterion.

12. The EIR terminal of claim **9**, wherein said EIR terminal is configured to switch at least one of said wireless communication network and said wireless communication protocol responsive to evaluating said user-defined criterion.

13. The EIR terminal of claim **9**, further configured to dynamically select at least one of a wireless communication network, a wireless communication protocol, and a parameter of a wireless communication protocol responsive to a user action.

14. The EIR terminal of claim **9**, further configured to dynamically select at least one of a wireless communication network, a wireless communication protocol, and a parameter of a wireless communication protocol responsive to scanning a pre-defined bar code.

15. An encoded information reading terminal comprising:

a microprocessor electrically coupled to a system bus;

a memory communicatively coupled to said microprocessor;

an encoded information reading (EIR) device selected from the group consisting of a bar code reading device, an RFID reading device, and a card reading device, said EIR device configured to perform at least one of outputting raw message data containing an encoded message and outputting decoded message data corresponding to an encoded message; and

a wireless communication interface comprising an RF front end configured to perform at least one of receiving a first radio signal and transmitting a second radio signal, said RF front end electrically coupled to at least one of an analog-to-digital converter (ADC) electrically coupled to said system bus and a digital-to-analog converter (DAC) electrically coupled to said system bus;

wherein said microprocessor is configured to execute at least one of a base-band encoder software program and a base-band decoder software program;

wherein said EIR terminal is configured to dynamically select at least one of a wireless communication network, a wireless communication protocol, and a parameter of a wireless communication protocol responsive to at least one of a user action, scanning a pre-defined bar code.

16. The EIR terminal of claim **15**, wherein said base-band encoder software program is performed by at least one of a general purpose microprocessor, a specialized microprocessor.

17. The EIR terminal of claim **15**, wherein said base-band decoder software program is performed by at least one of a general purpose microprocessor, a specialized microprocessor.

18. An encoded information reading terminal comprising:

a microprocessor electrically coupled to a system bus;

a memory communicatively coupled to said microprocessor;

an encoded information reading (EIR) device selected from the group consisting of a bar code reading device, an RFID reading device, and a card reading device, said EIR device configured to perform at least one of outputting raw message data containing an encoded message and outputting decoded message data corresponding to an encoded message; and

a wireless communication interface configured to support at least two wireless communication protocols;

wherein said EIR terminal is configured to execute a wireless communication protocol selector software program, said wireless communication protocol selector software program configured optimize a value of a user-defined criterion in order to dynamically select at least one of a wireless communication network, a wireless communication protocol, and a parameter of a wireless communication protocol.

19. The EIR terminal of claim **18**, wherein said wireless communication interface is implemented using a single multi-protocol chipset.

20. The EIR terminal of claim **18**, wherein said wireless communication interface is implemented using two or more chipsets.

21. The EIR terminal of claim **18**, wherein said value of said user-defined criterion is calculated based on at least one of network status, communication quality, signal strength, service cost, bandwidth, a user preference, and communication channel throughput.

22. The EIR terminal of claim **18**, wherein said EIR terminal is configured to search beacon signals over a pre-defined frequency range, and then select at least one of a wireless communication network and frequency channel which optimizes said user-defined criterion.

23. The EIR terminal of claim **18**, wherein said EIR terminal is configured to switch at least one of said wireless communication network and said wireless communication protocol responsive to evaluating said user-defined criterion.

* * * * *