US 20100056200A1

(19) United States

(12) Patent Application Publication

TOLONEN

(10) Pub. No.: US 2010/0056200 A1

(43) Pub. Date: Mar. 4, 2010

(54) **SOFTWARE-DEFINED RADIO CONFIGURATION**

(75) Inventor: **Pertti TOLONEN**, Aatelikuja 1A (FI)

Correspondence Address:
Locke Lord Bissell & Liddell LLP
Attn: IP Docketing
Three World Financial Center
New York, NY 10281-2101 (US)

(73) Assignee: **NOKIA CORPORATION**, Espoo (FI)

(21) Appl. No.: **12/203,746**

(22) Filed: **Sep. 3, 2008**

Publication Classification

(51) **Int. Cl.**
H04M 1/00 (2006.01)

(52) **U.S. Cl.** **455/552.1**

(57) **ABSTRACT**

A system for configuring communication resources that are at least partially based upon reconfigurable software modules. An apparatus may utilize a plurality of transports for communication, wherein the transports are supported by one or more radio modules. The one or more radio modules may comprise hardware-based radio modules and software-defined radio (SDR) modules including a reconfigurable software element that allows the radio module to emulate the functionality of multiple hardware-based radios. In accordance with at least one embodiment of the present invention, SDR modules in an apparatus may formulate a communication configuration for use in communicating with another apparatus based on remote characteristic information (e.g., information corresponding to the apparatus with which communication is desired) and local characteristic information pertaining to the apparatus.

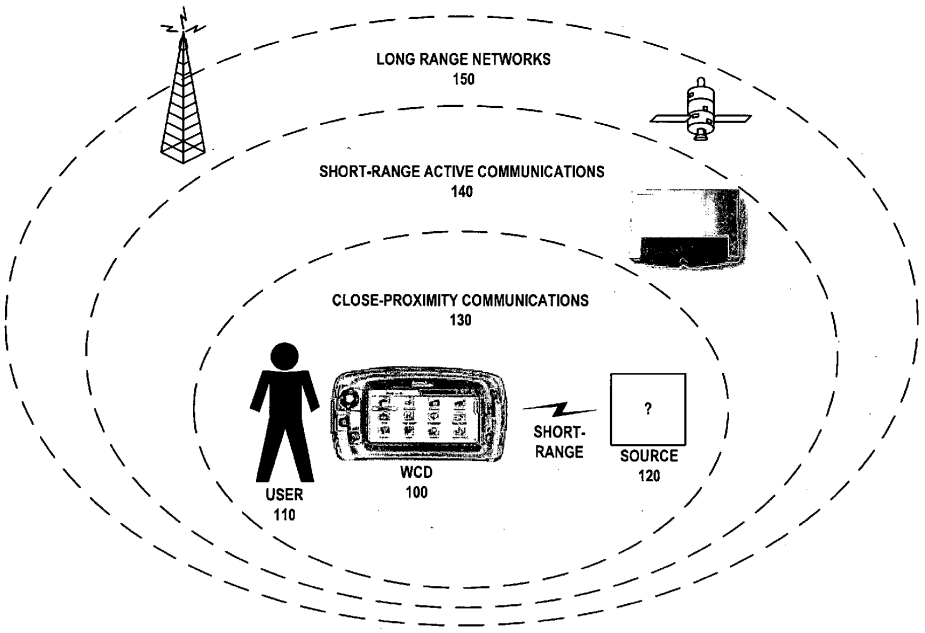

TransCore LP
Exhibit 1005

FIG. 1

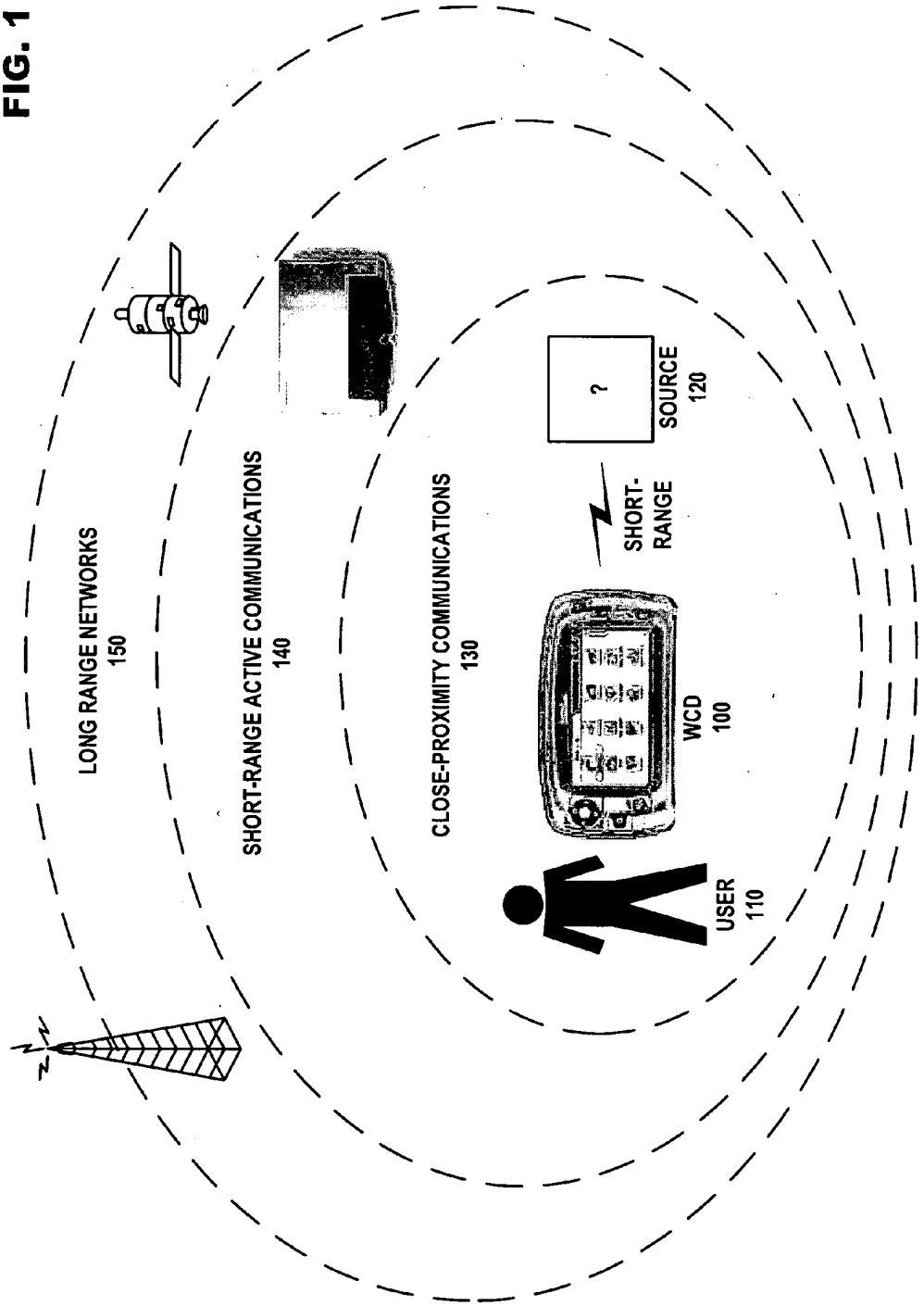
LONG RANGE NETWORKS
150
SHORT-RANGE ACTIVE COMMUNICATIONS
140
CLOSE-PROXIMITY COMMUNICATIONS
130
?
SOURCE
120
SHORT-
RANGE
WCD
100
USER
110

FIG. 2

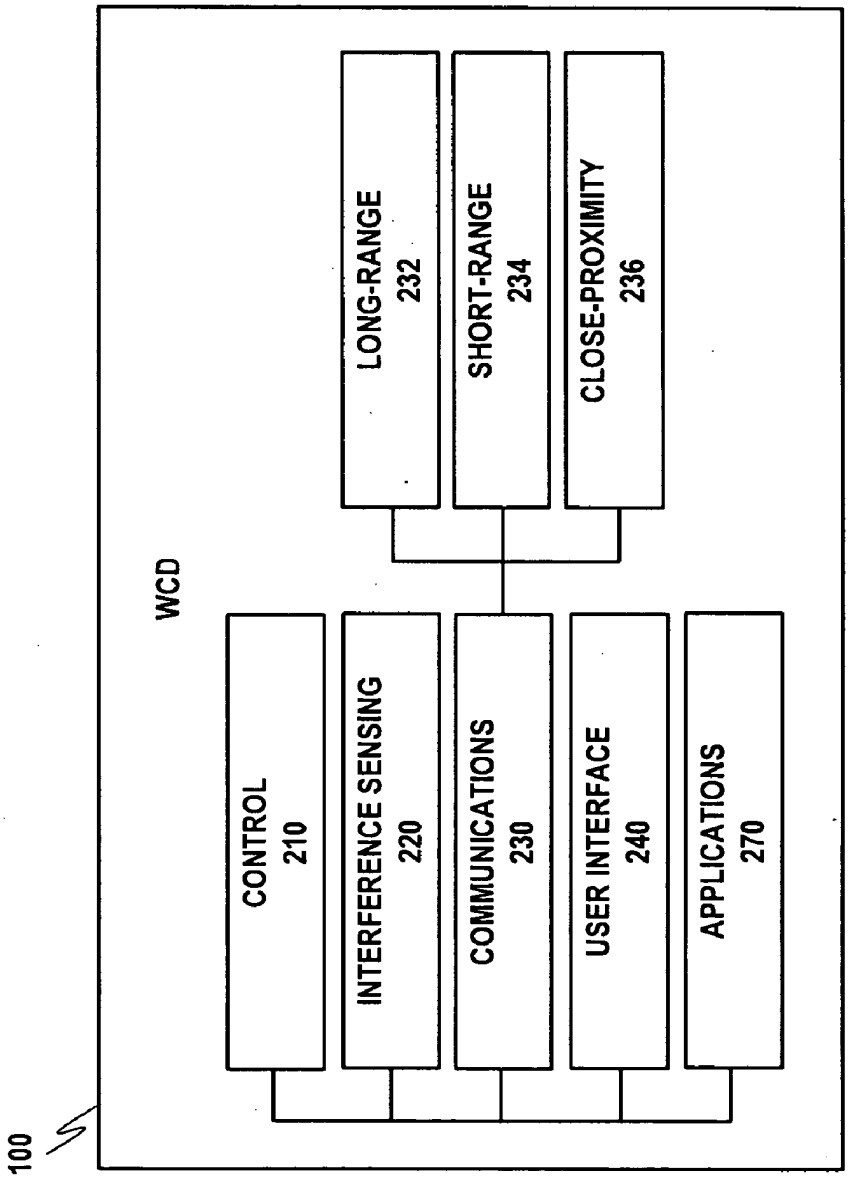
100
WCD
CONTROL
210
INTERFERENCE SENSING
220
COMMUNICATIONS
230
USER INTERFACE
240
APPLICATIONS
270
LONG-RANGE
232
SHORT-RANGE
234
CLOSE-PROXIMITY
236

FIG. 3

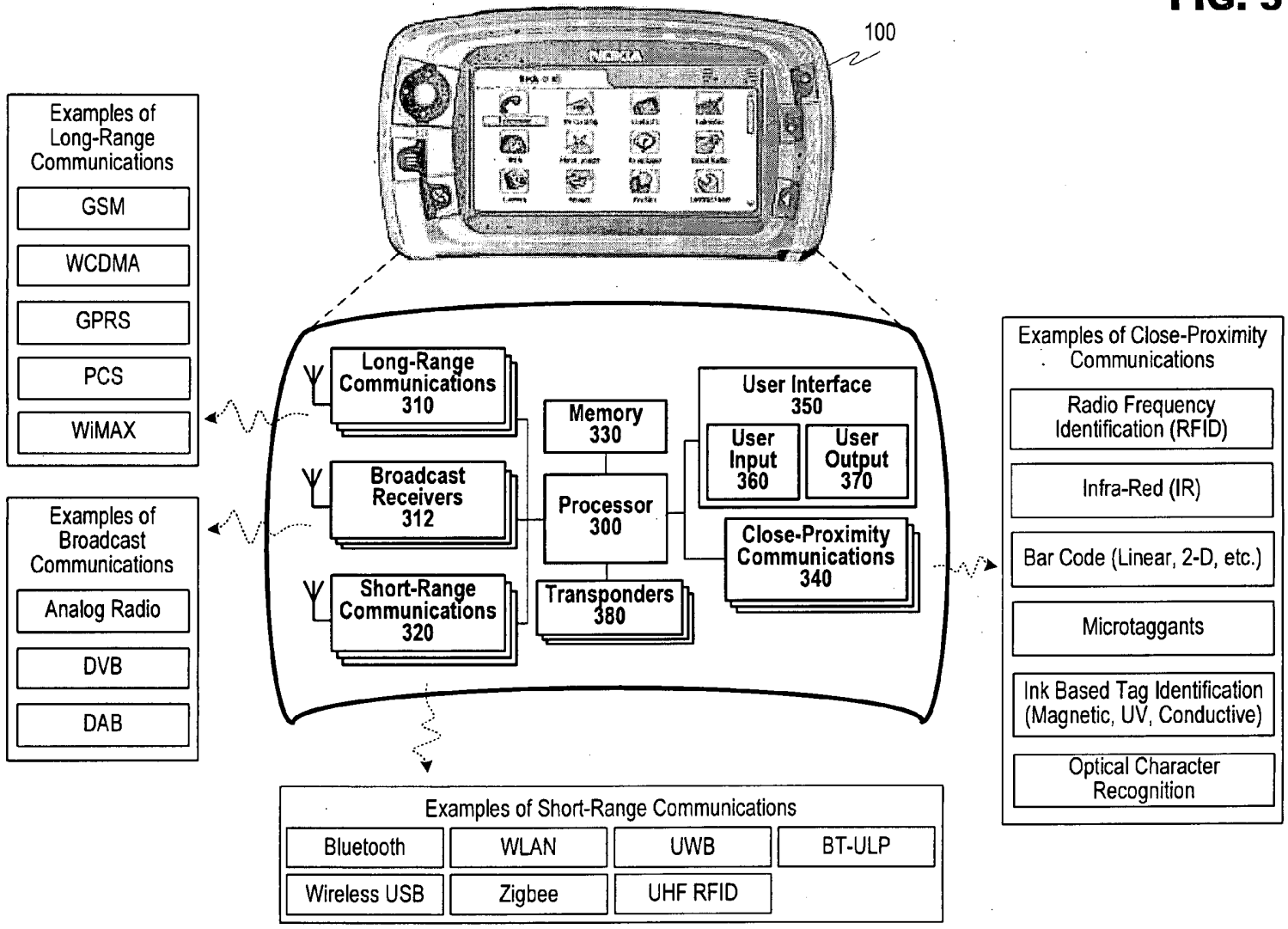
100
Examples of Long-Range Communications
GSM
WCDMA
GPRS
PCS
WiMAX
Examples of Broadcast Communications
Analog Radio
DVB
DAB
Long-Range Communications 310
Broadcast Receivers 312
Short-Range Communications 320
Memory 330
Processor 300
Transponders 380
User Interface 350
User Input 360
User Output 370
Close-Proximity Communications 340
Examples of Close-Proximity Communications
Radio Frequency Identification (RFID)
Infra-Red (IR)
Bar Code (Linear, 2-D, etc.)
Microtaggants
Ink Based Tag Identification (Magnetic, UV, Conductive)
Optical Character Recognition
Examples of Short-Range Communications
Bluetooth
WLAN
UWB
BT-ULP
Wireless USB
Zigbee
UHF RFID

FIG. 4

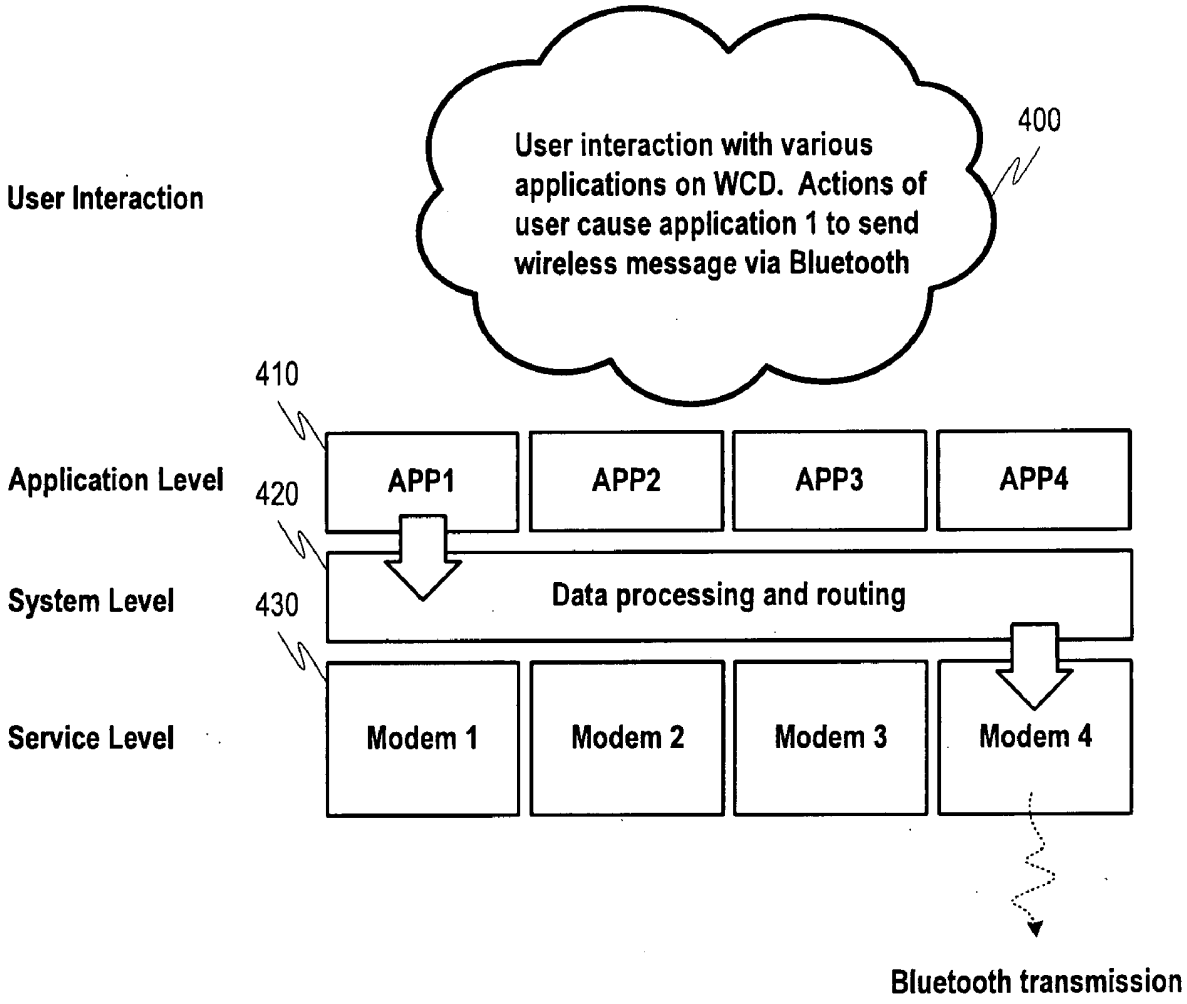
User Interaction
User interaction with various applications on WCD. Actions of user cause application 1 to send wireless message via Bluetooth
400
410
Application Level
420
APP1
APP2
APP3
APP4
System Level
430
Data processing and routing
Service Level
Modem 1
Modem 2
Modem 3
Modem 4
Bluetooth transmission

FIG. 5

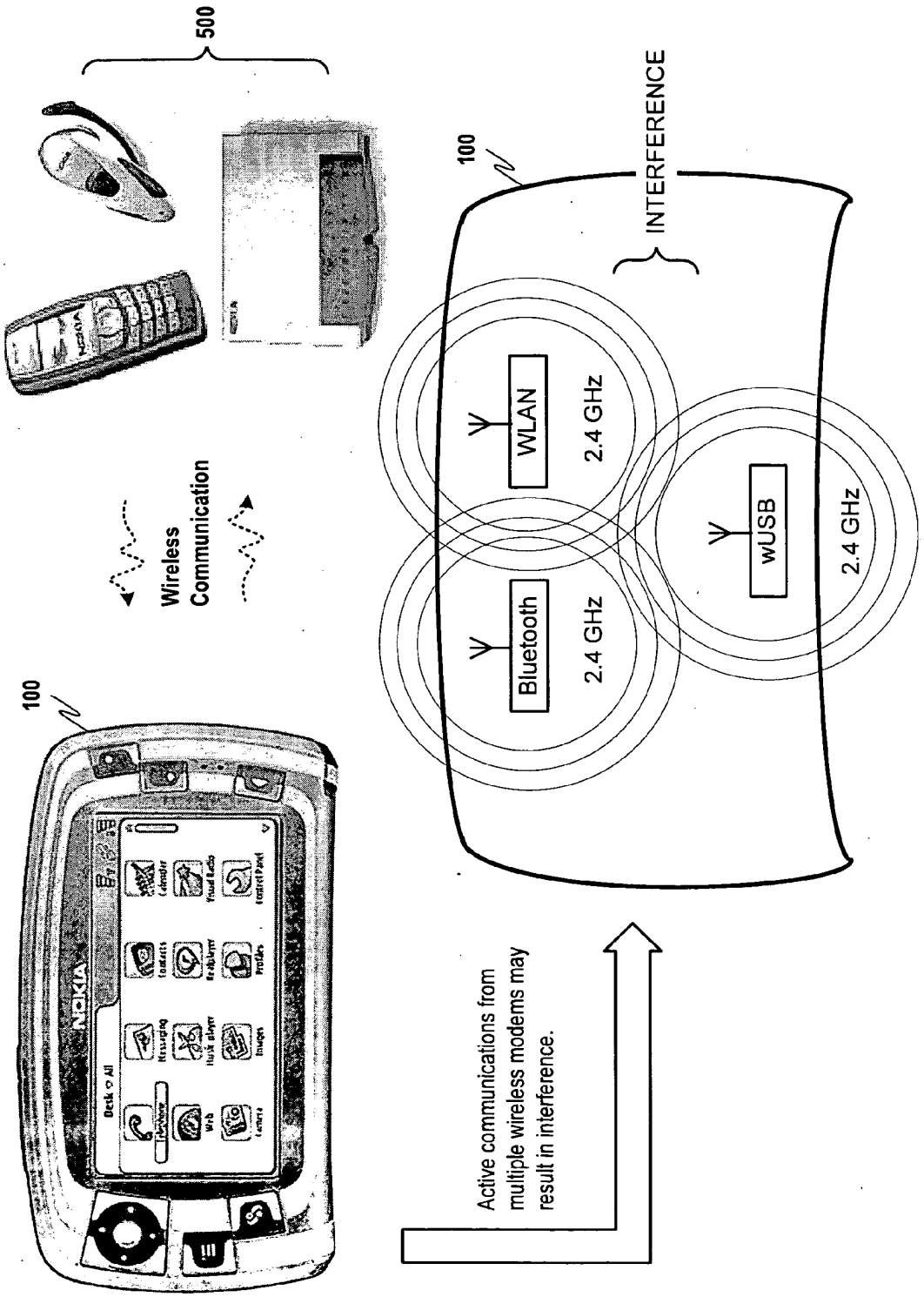
500
Wireless Communication
100
100
INTERFERENCE
WLAN
2.4 GHz
Bluetooth
2.4 GHz
wUSB
2.4 GHz
Active communications from multiple wireless modems may result in interference.

FIG. 6A

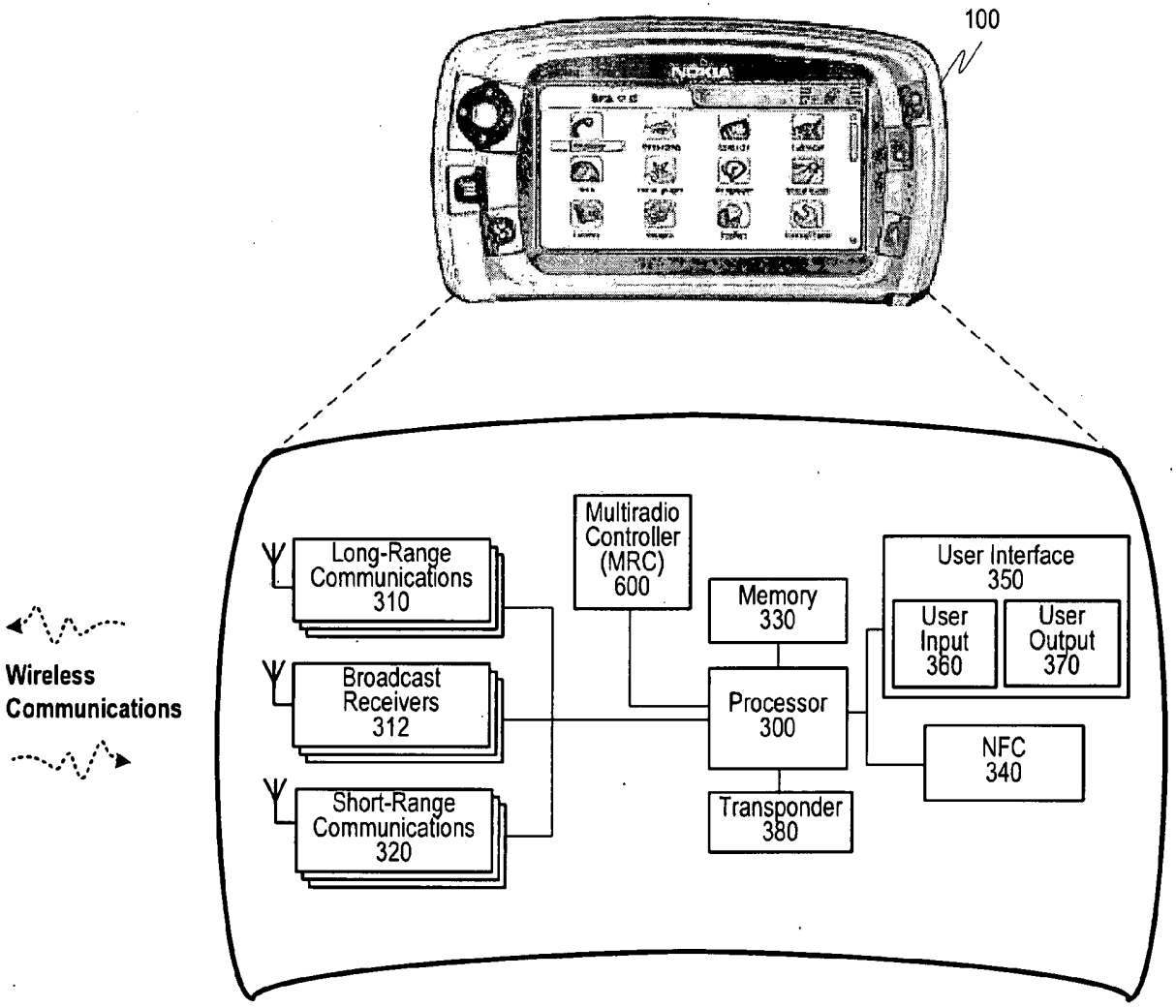
100
Wireless Communications
Long-Range Communications 310
Broadcast Receivers 312
Short-Range Communications 320
Multiradio Controller (MRC) 600
Memory 330
Processor 300
Transponder 380
User Interface 350
User Input 360
User Output 370
NFC 340

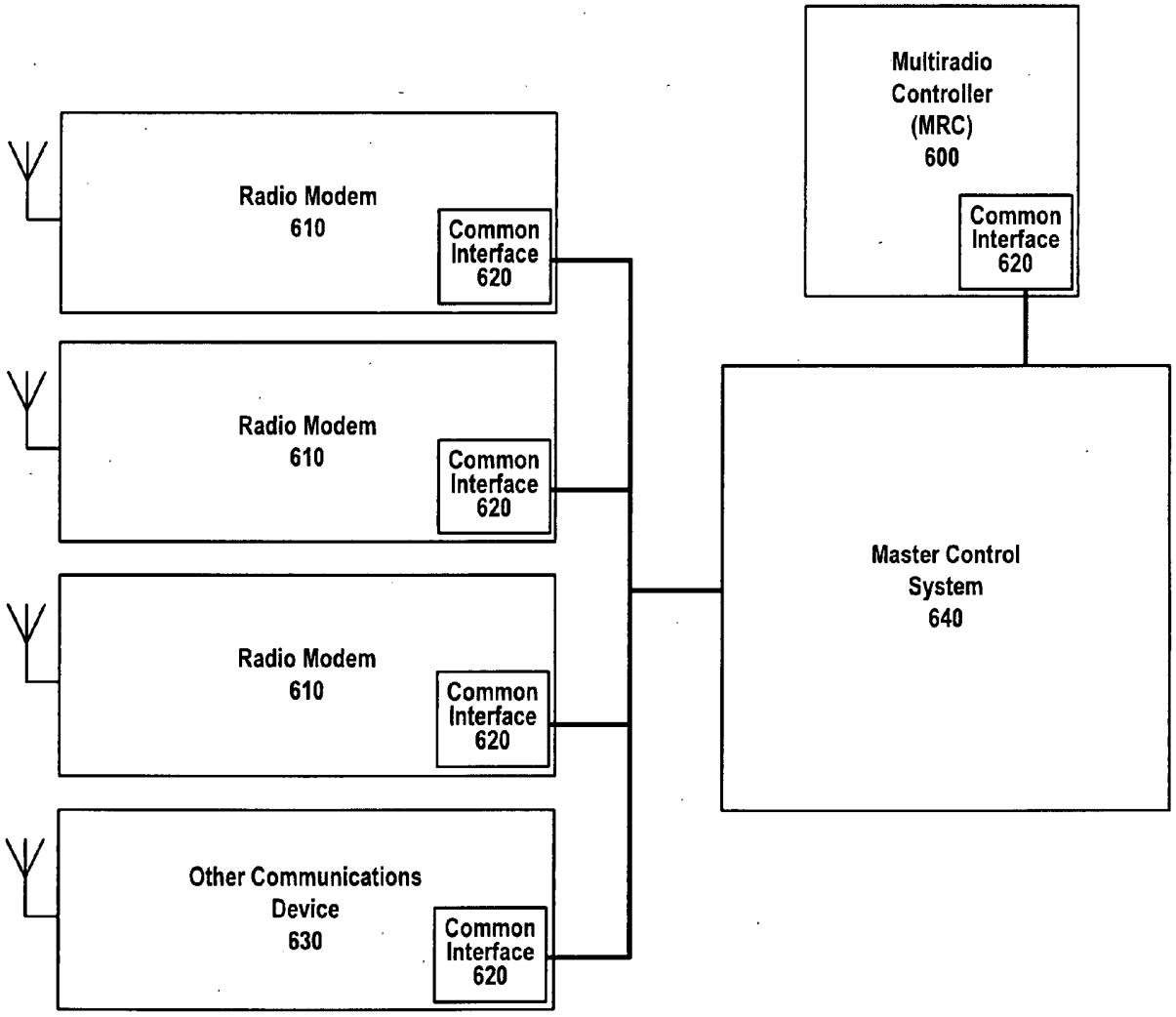
Multiradio
Controller
(MRC)
600
Common
Interface
620
Radio Modem
610
Common
Interface
620
Radio Modem
610
Common
Interface
620
Radio Modem
610
Common
Interface
620
Other Communications
Device
630
Common
Interface
620
Master Control
System
640

FIG. 6B

FIG. 6C

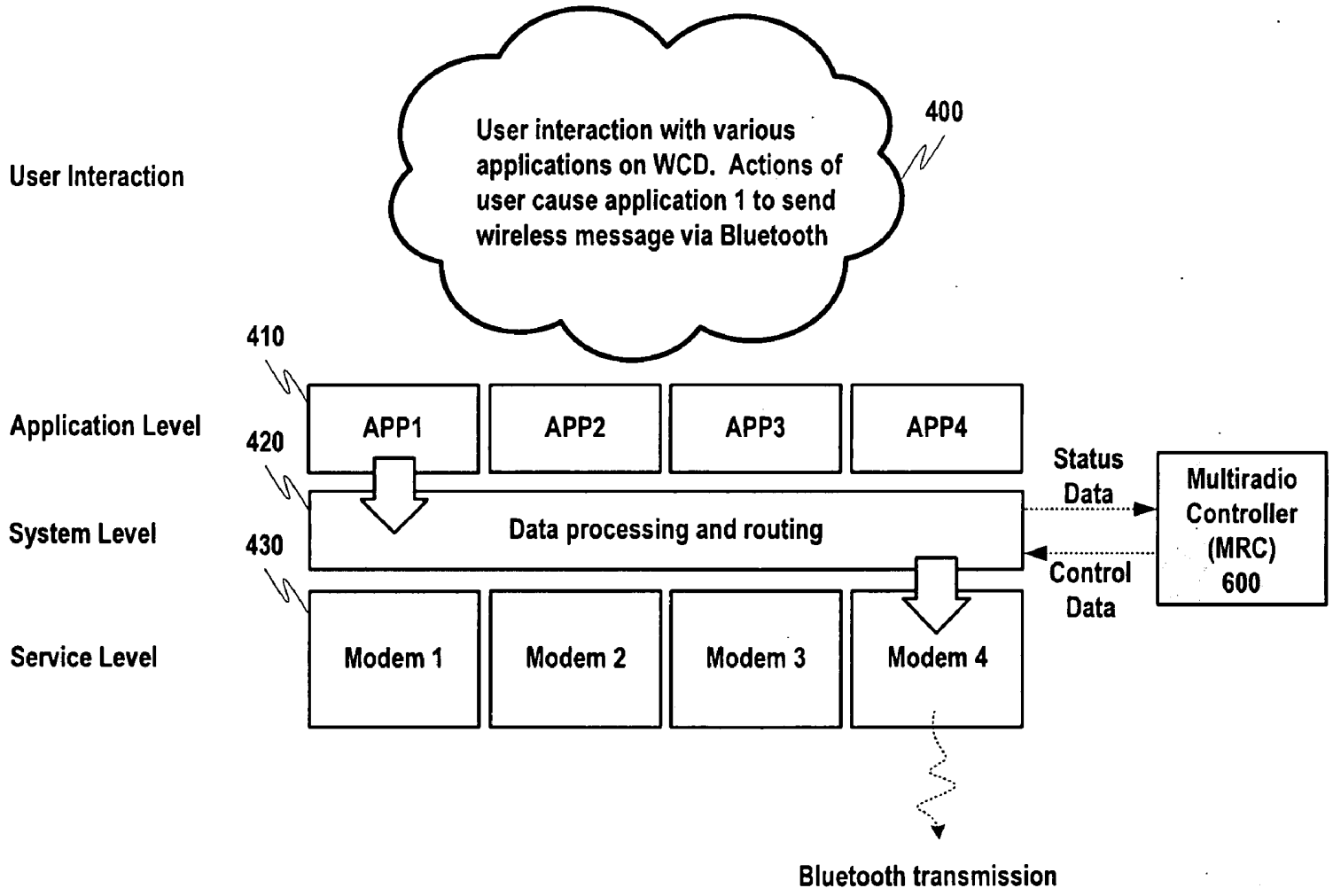
User Interaction
User interaction with various applications on WCD. Actions of user cause application 1 to send wireless message via Bluetooth
400
Application Level
410
APP1
APP2
APP3
APP4
System Level
420
Data processing and routing
Service Level
430
Modem 1
Modem 2
Modem 3
Modem 4
Status Data
Control Data
Multiradio Controller (MRC) 600
Bluetooth transmission

FIG. 7A

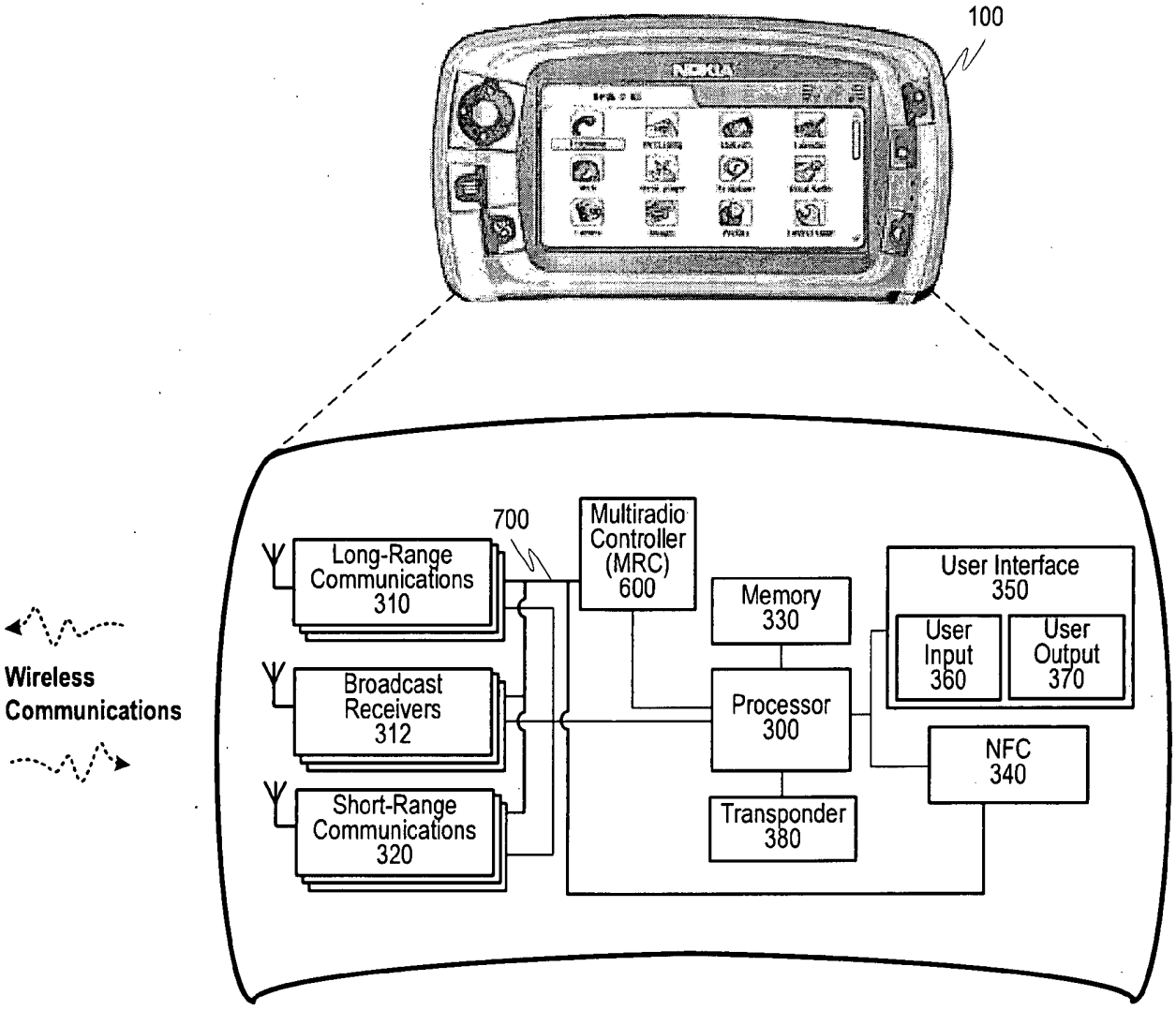
100
700
Long-Range Communications 310
Broadcast Receivers 312
Short-Range Communications 320
Multiradio Controller (MRC) 600
Memory 330
Processor 300
Transponder 380
User Interface 350
User Input 360
User Output 370
NFC 340
Wireless Communications

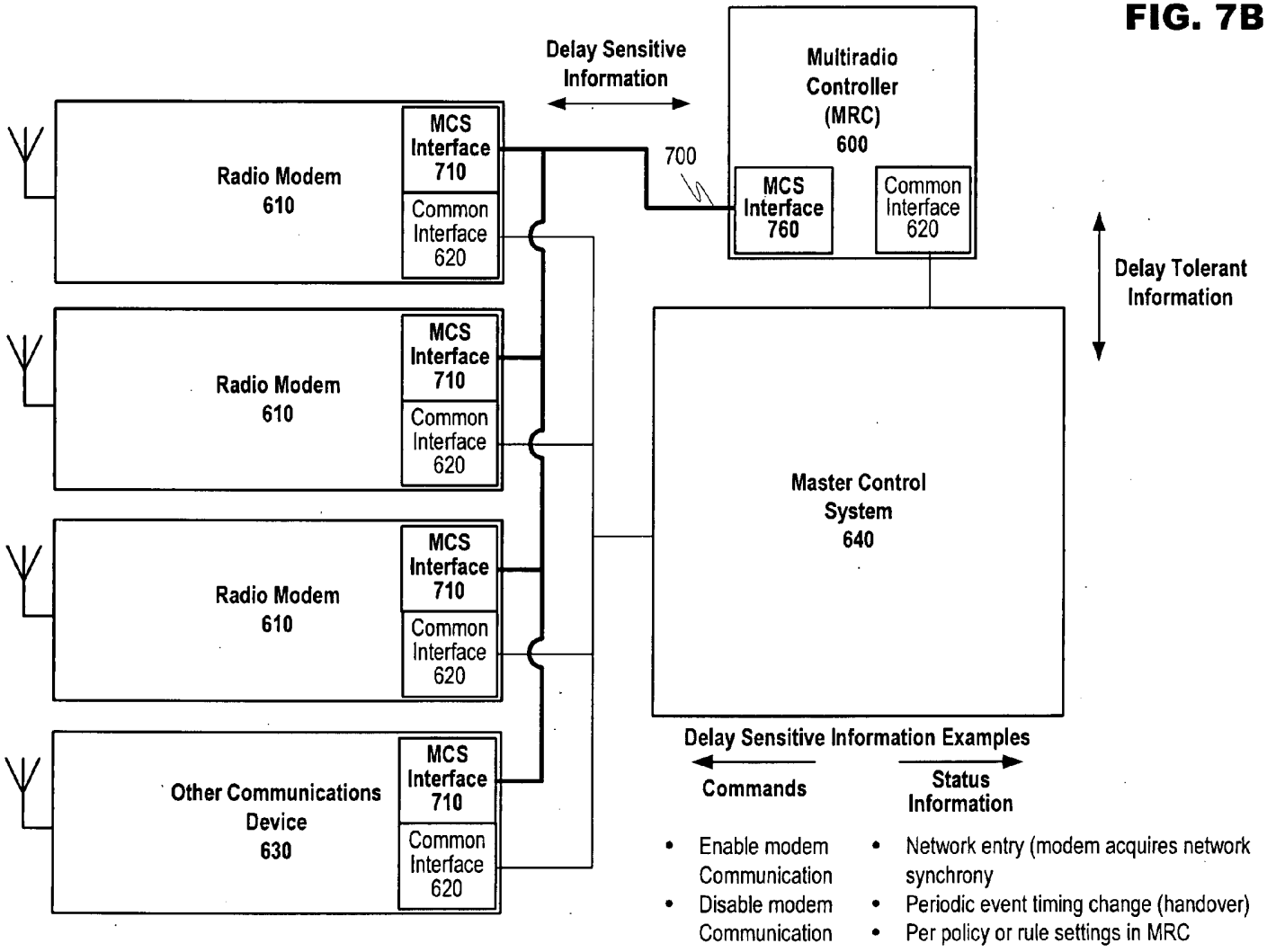
Delay Sensitive Information
Multiradio Controller (MRC) 600
MCS Interface 760
Common Interface 620
700
Radio Modem 610
MCS Interface 710
Common Interface 620
Radio Modem 610
MCS Interface 710
Common Interface 620
Radio Modem 610
MCS Interface 710
Common Interface 620
Other Communications Device 630
MCS Interface 710
Common Interface 620
Delay Tolerant Information
Master Control System 640
Delay Sensitive Information Examples
Commands
Status Information
• Enable modem Communication
• Disable modem Communication
• Network entry (modem acquires network synchrony
• Periodic event timing change (handover)
• Per policy or rule settings in MRC

FIG. 7B

FIG. 7C

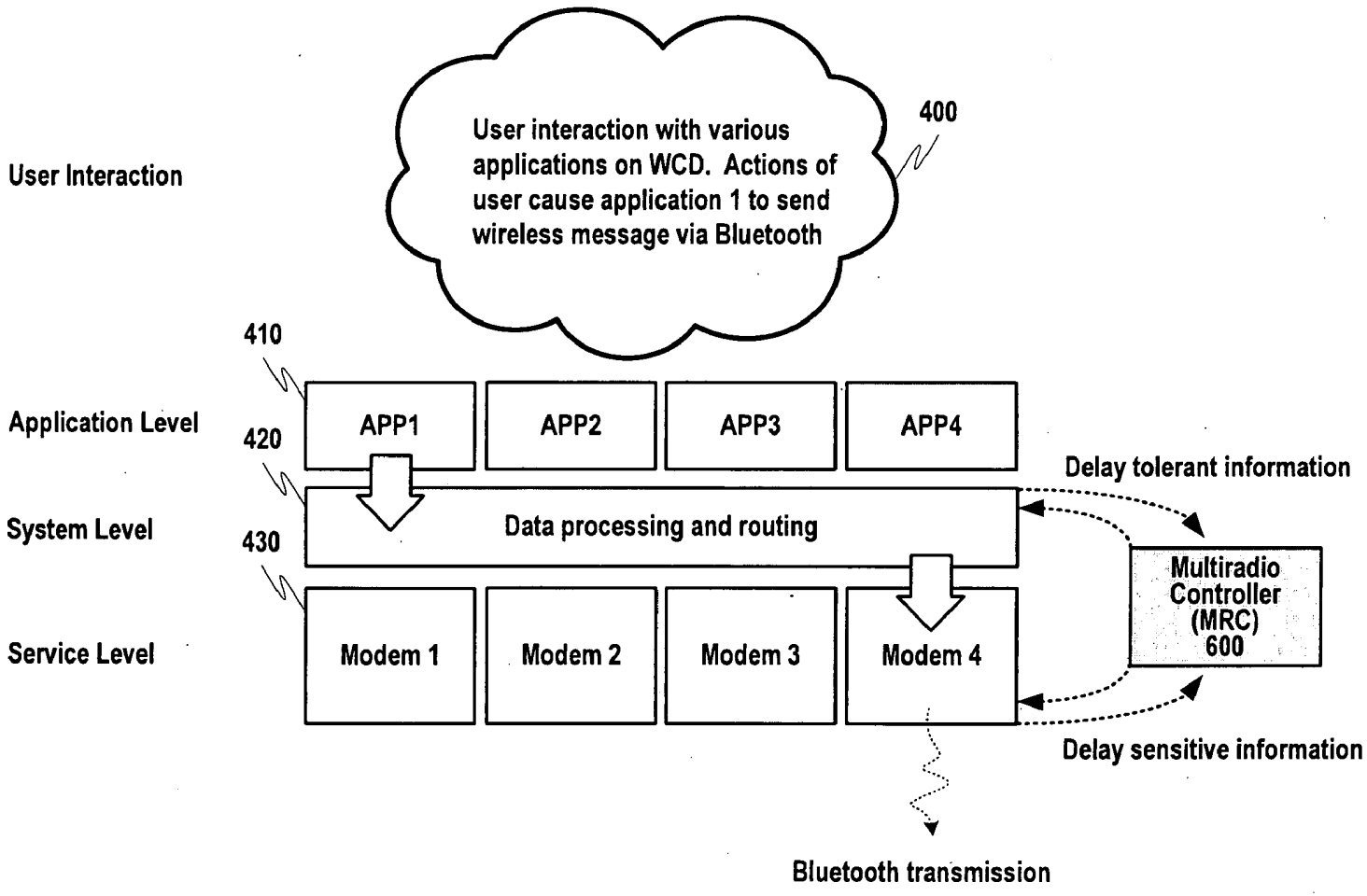
User interaction with various applications on WCD. Actions of user cause application 1 to send wireless message via Bluetooth
400
User Interaction
410
Application Level
APP1
APP2
APP3
APP4
420
System Level
Data processing and routing
430
Service Level
Modem 1
Modem 2
Modem 3
Modem 4
Delay tolerant information
Multiradio Controller (MRC) 600
Delay sensitive information
Bluetooth transmission

FIG. 8A

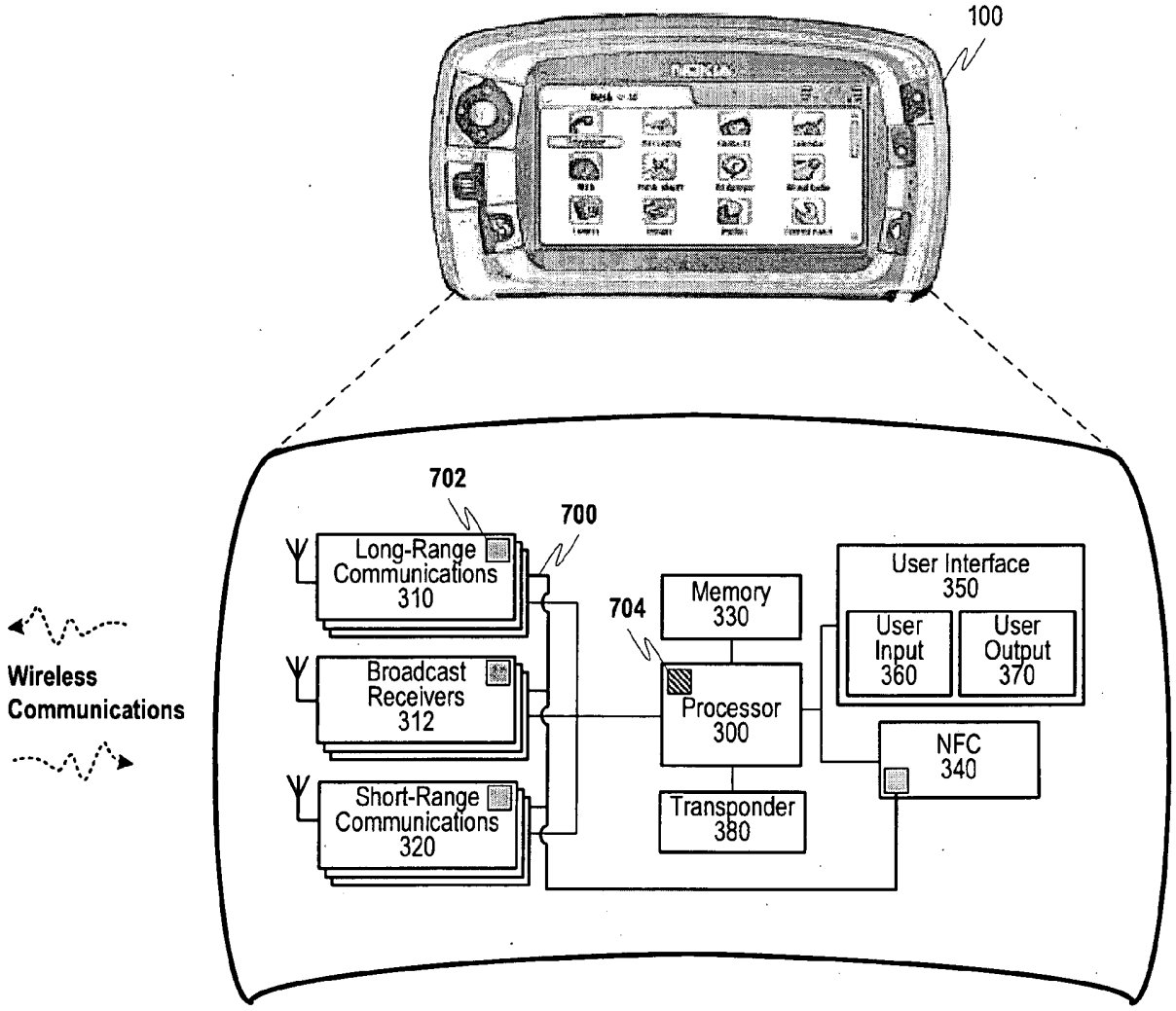
100
702
700
704
Long-Range Communications 310
Broadcast Receivers 312
Short-Range Communications 320
Memory 330
Processor 300
Transponder 380
User Interface 350
User Input 360
User Output 370
NFC 340
Wireless Communications

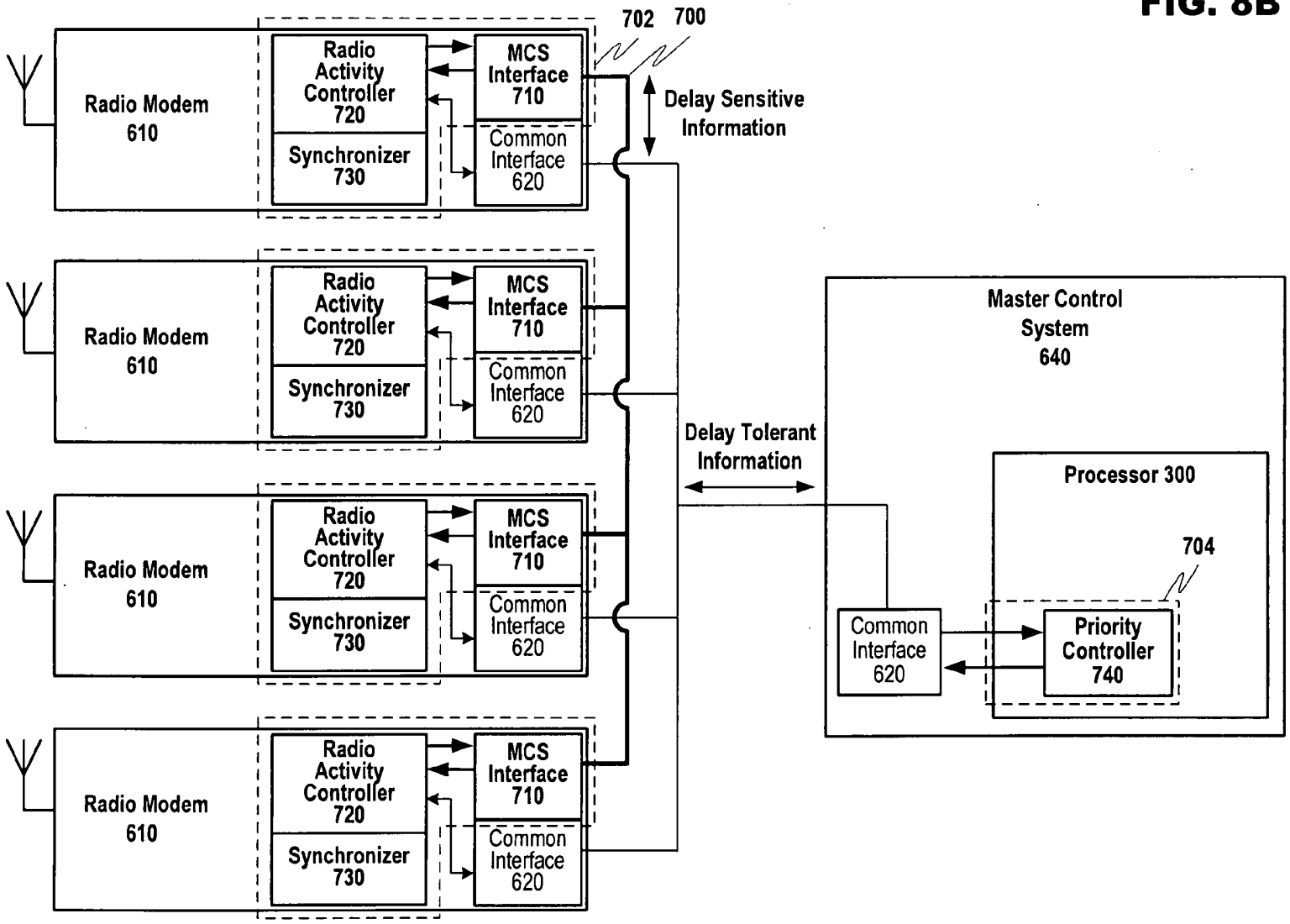
702
700
Radio Modem 610
Radio Activity Controller 720
Synchronizer 730
MCS Interface 710
Common Interface 620
Radio Modem 610
Radio Activity Controller 720
Synchronizer 730
MCS Interface 710
Common Interface 620
Radio Modem 610
Radio Activity Controller 720
Synchronizer 730
MCS Interface 710
Common Interface 620
Radio Modem 610
Radio Activity Controller 720
Synchronizer 730
MCS Interface 710
Common Interface 620
Delay Sensitive Information
Delay Tolerant Information
Master Control System 640
Processor 300
704
Common Interface 620
Priority Controller 740

FIG. 8B

FIG. 8C

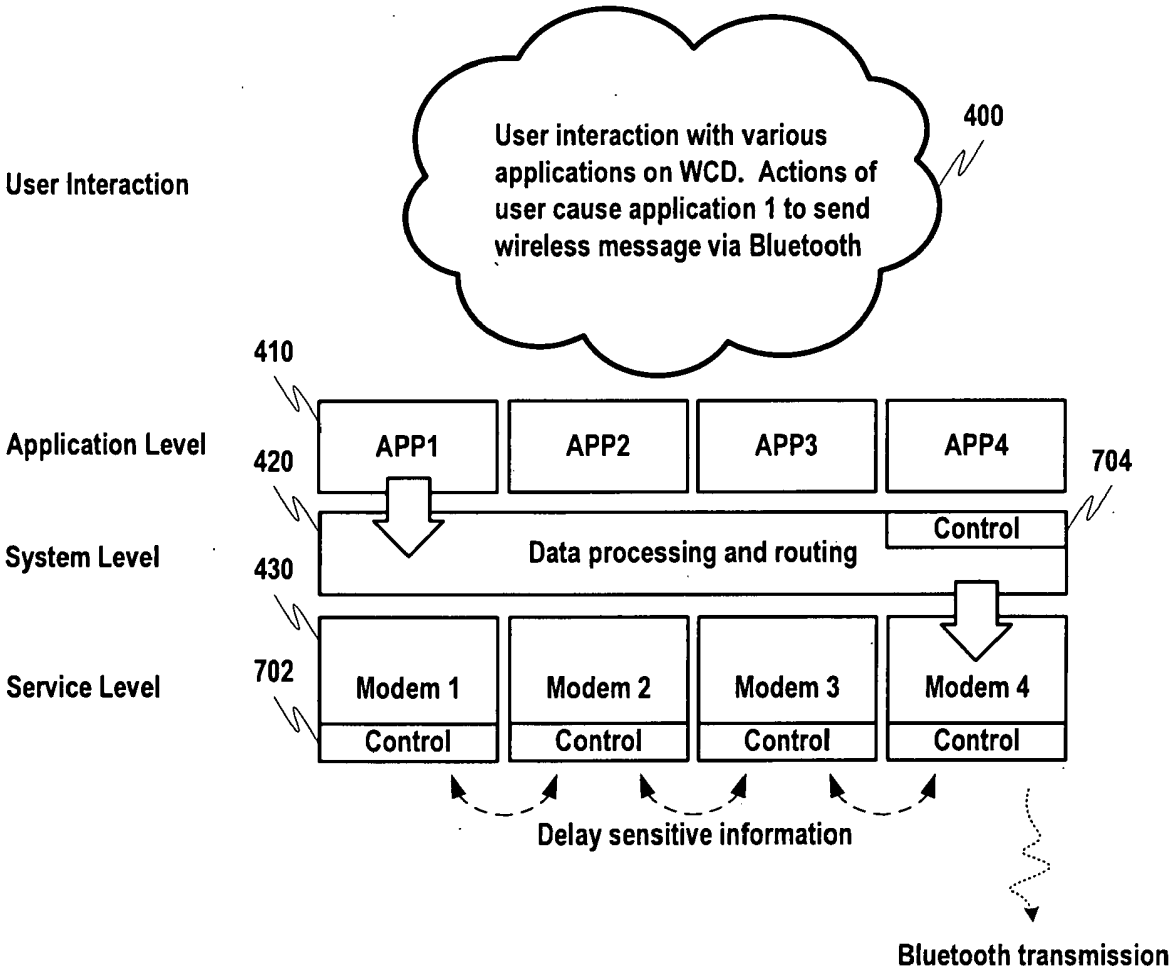
User Interaction
User interaction with various applications on WCD. Actions of user cause application 1 to send wireless message via Bluetooth
400
410
Application Level
APP1
APP2
APP3
APP4
420
704
System Level
Control
Data processing and routing
430
Service Level
702
Modem 1
Modem 2
Modem 3
Modem 4
Control
Control
Control
Control
Delay sensitive information
Bluetooth transmission

FIG. 9A

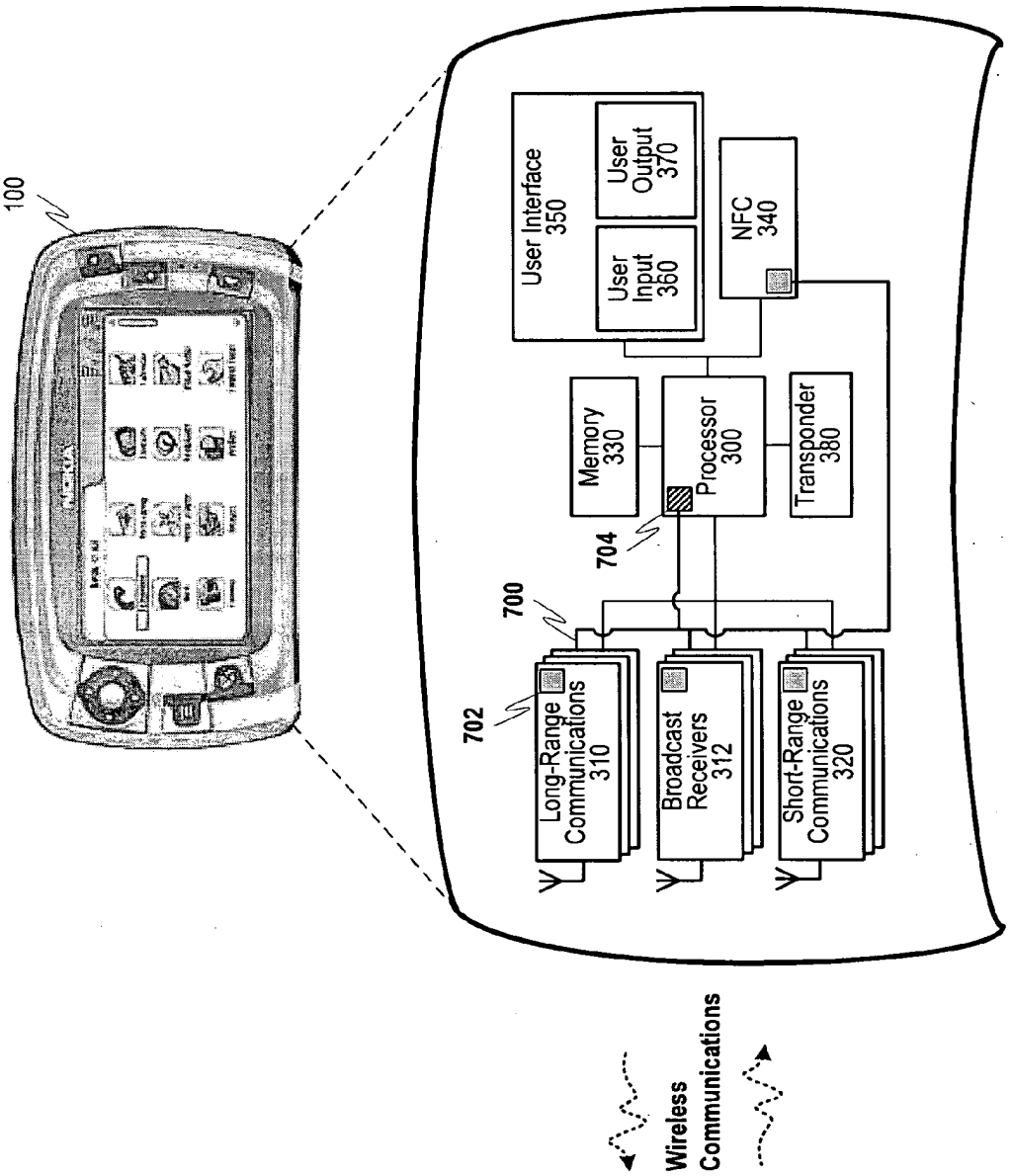
100
User Interface 350
User Input 360
User Output 370
NFC 340
Memory 330
Processor 300
Transponder 380
704
700
702
Long-Range Communications 310
Broadcast Receivers 312
Short-Range Communications 320
Wireless Communications

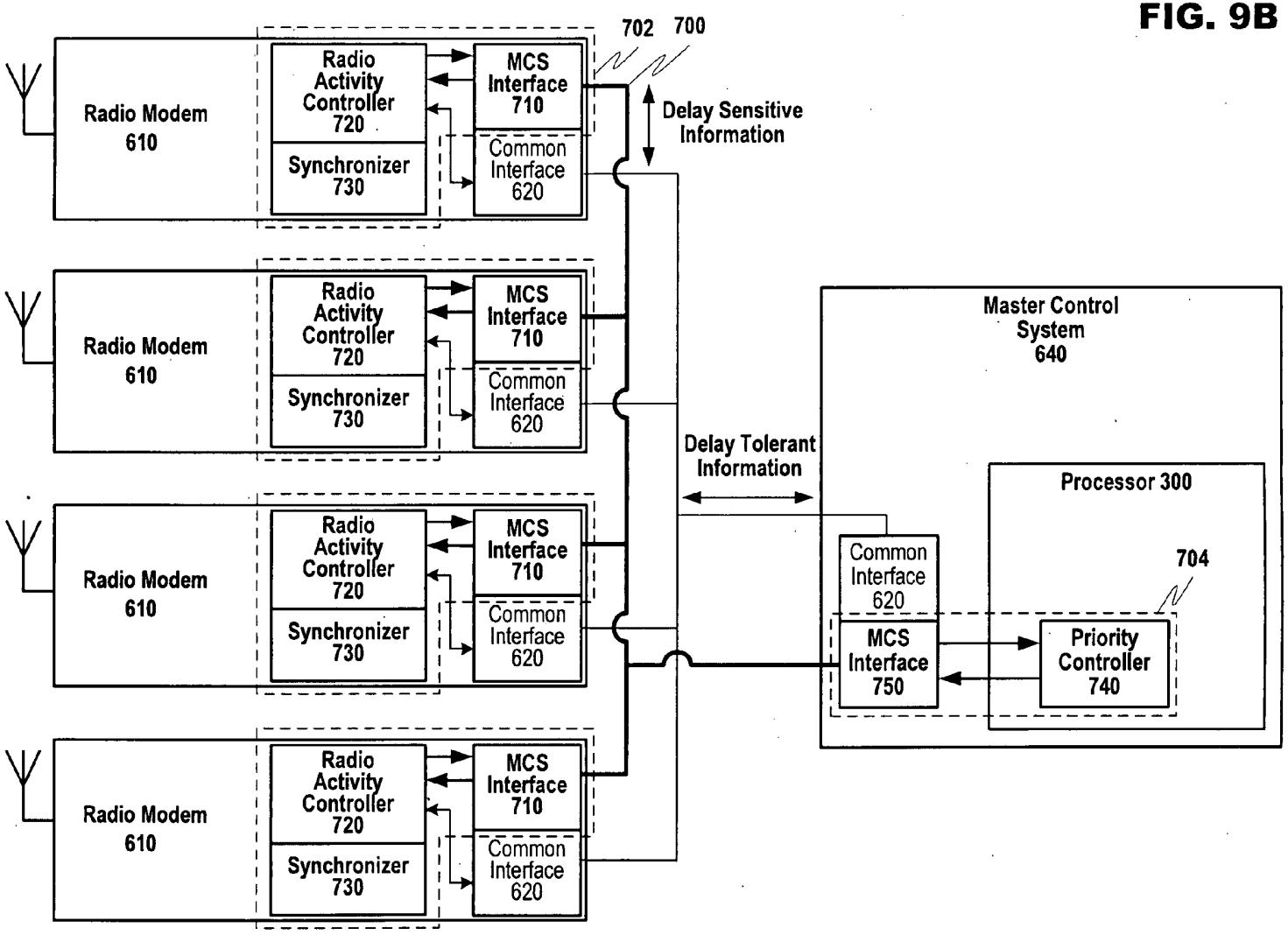
702
700
Radio Modem 610
Radio Activity Controller 720
Synchronizer 730
MCS Interface 710
Common Interface 620
Delay Sensitive Information
Delay Tolerant Information
Master Control System 640
Processor 300
704
Common Interface 620
MCS Interface 750
Priority Controller 740

FIG. 9B

FIG. 9C

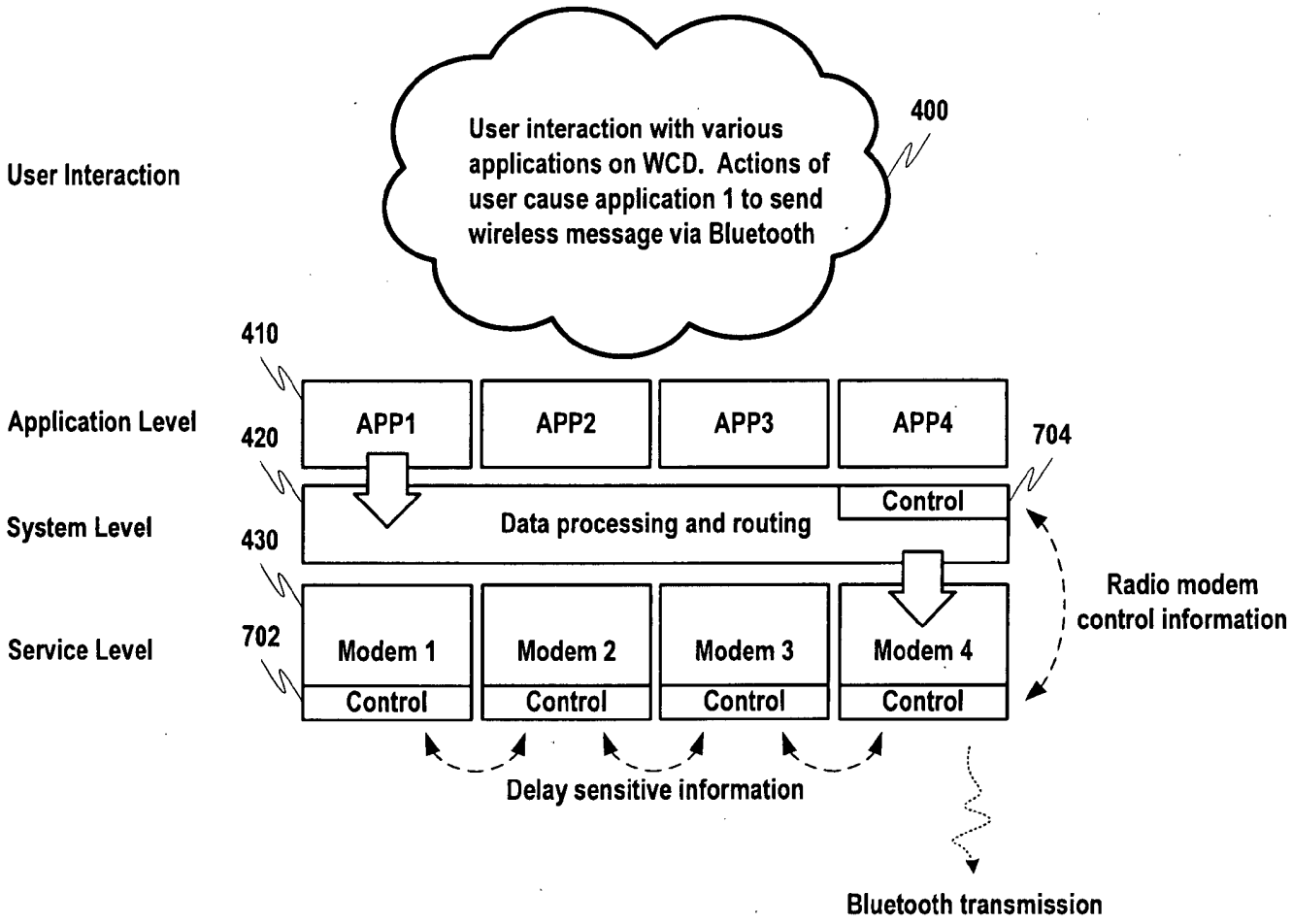
User Interaction
User interaction with various applications on WCD. Actions of user cause application 1 to send wireless message via Bluetooth
400
410
Application Level
APP1
APP2
APP3
APP4
420
704
System Level
Control
Data processing and routing
430
Radio modem control information
Service Level
702
Modem 1
Modem 2
Modem 3
Modem 4
Control
Control
Control
Control
Delay sensitive information
Bluetooth transmission

FIG. 10

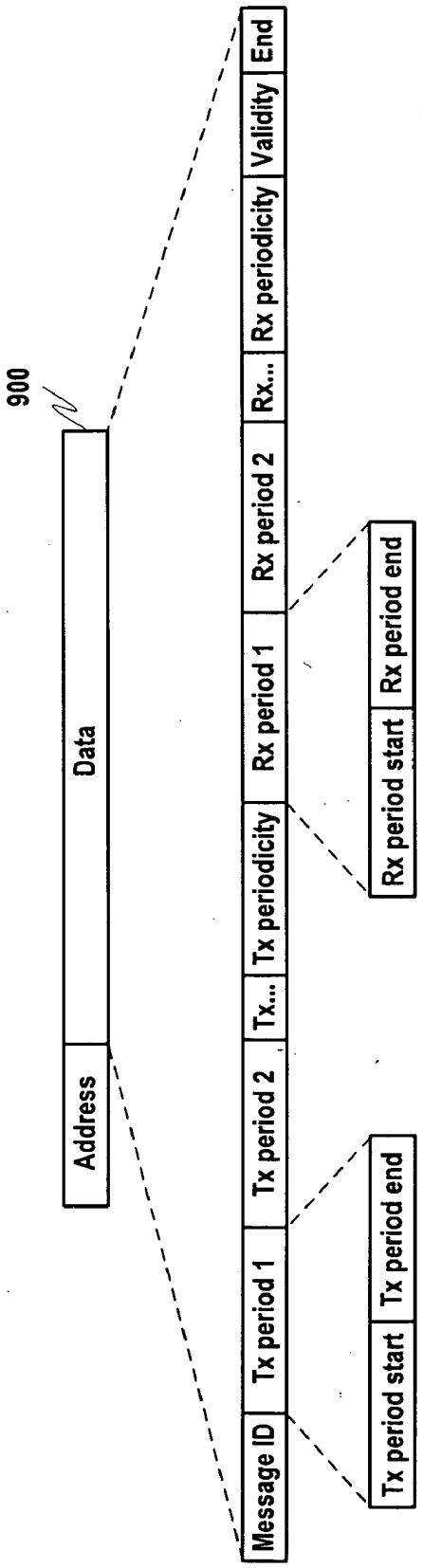
900
Address
Data
Message ID
Tx period 1
Tx period 2
Tx...
Tx periodicity
Rx period 1
Rx period 2
Rx...
Rx periodicity
Validity
End
Tx period start
Tx period end
Rx period start
Rx period end

FIG. 11

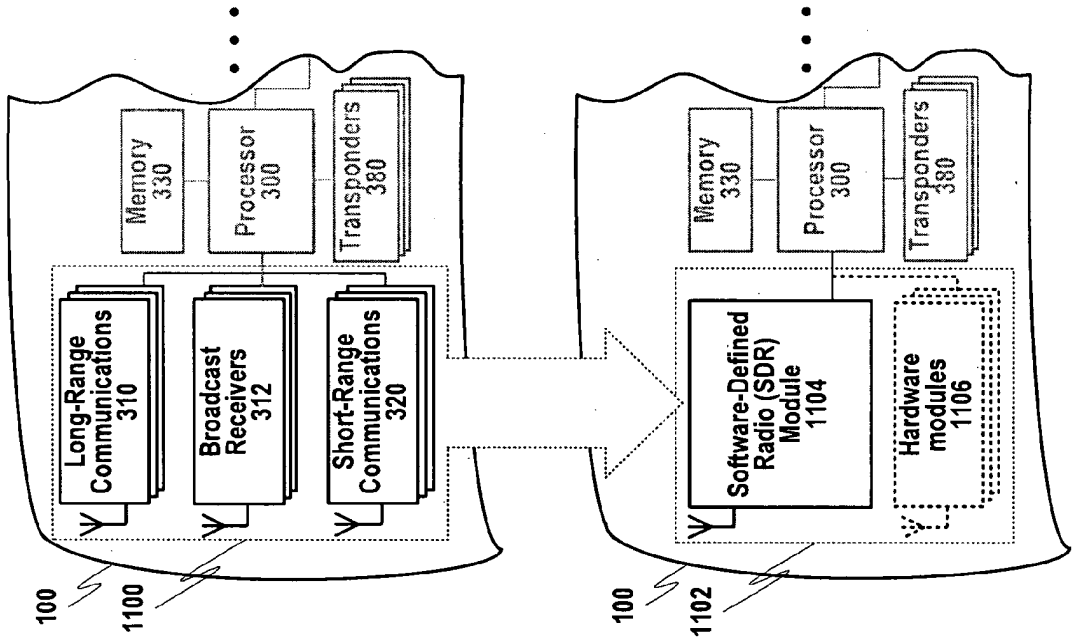
100
1100
Long-Range Communications 310
Broadcast Receivers 312
Short-Range Communications 320
Memory 330
Processor 300
Transponders 380
100
1102
Software-Defined Radio (SDR) Module 1104
Hardware modules 1106
Memory 330
Processor 300
Transponders 380

FIG. 12

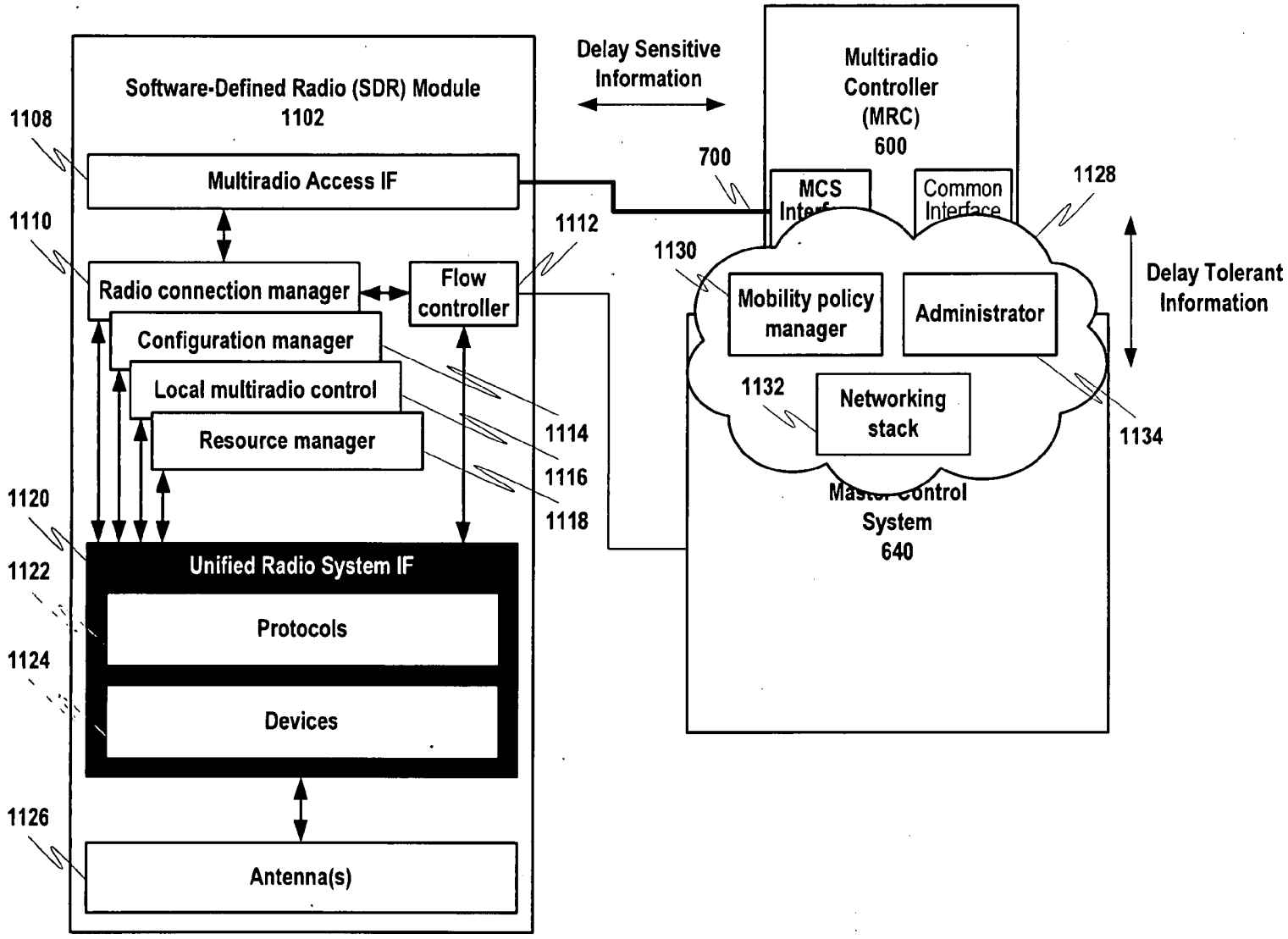
Software-Defined Radio (SDR) Module
1102
1108
Multiradio Access IF
1110
Radio connection manager
Flow controller
1112
Configuration manager
Local multiradio control
Resource manager
1114
1116
1118
1120
1122
Unified Radio System IF
Protocols
1124
Devices
1126
Antenna(s)
Delay Sensitive Information
700
Multiradio Controller (MRC)
600
MCS Interf
Common Interface
1128
1130
Mobility policy manager
Administrator
1132
Networking stack
1134
Master Control System
640
Delay Tolerant Information

FIG. 13

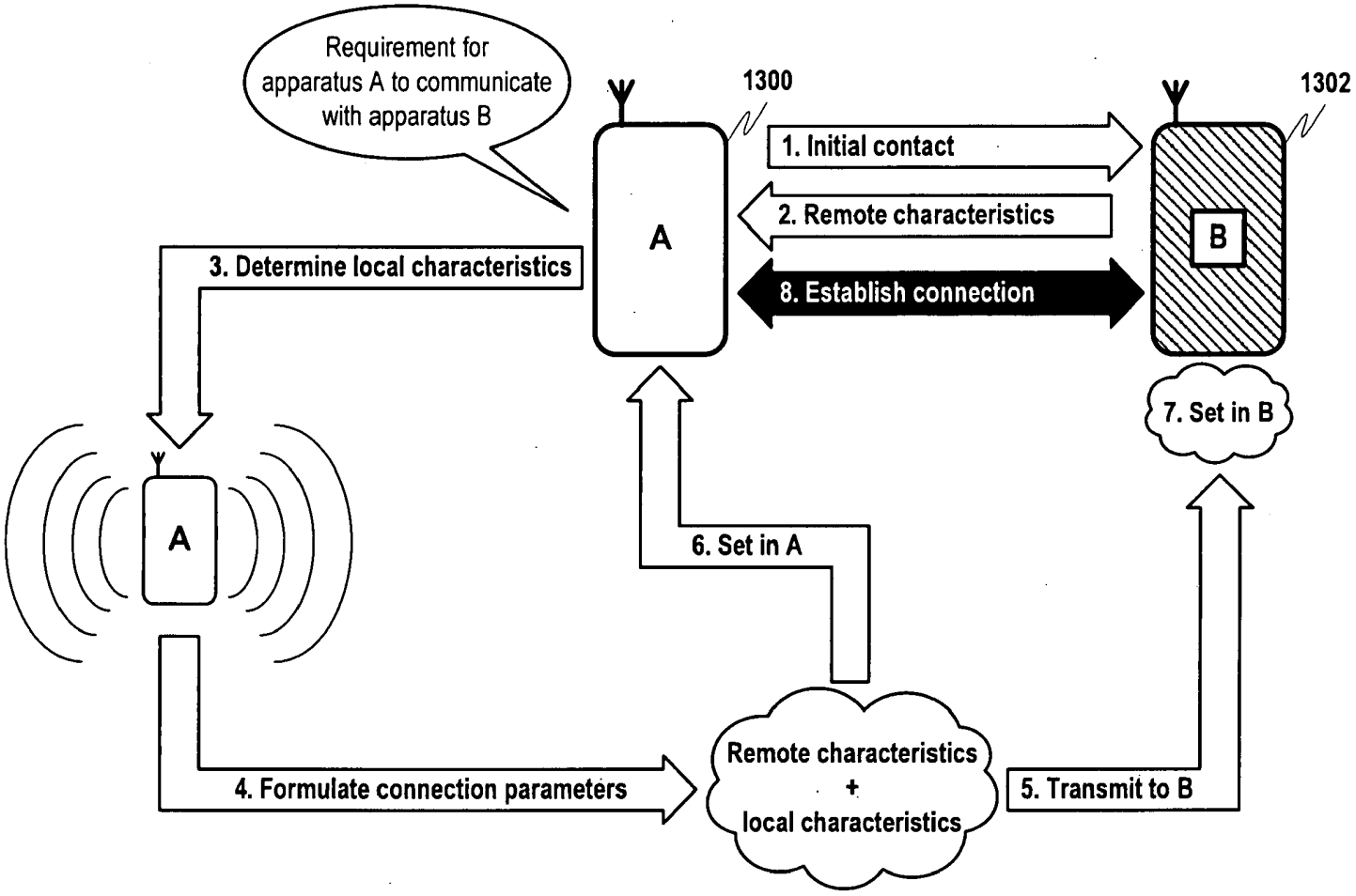
Requirement for apparatus A to communicate with apparatus B
1300
1302
A
B
1. Initial contact
2. Remote characteristics
8. Establish connection
3. Determine local characteristics
7. Set in B
A
6. Set in A
Remote characteristics + local characteristics
4. Formulate connection parameters
5. Transmit to B

FIG. 14A

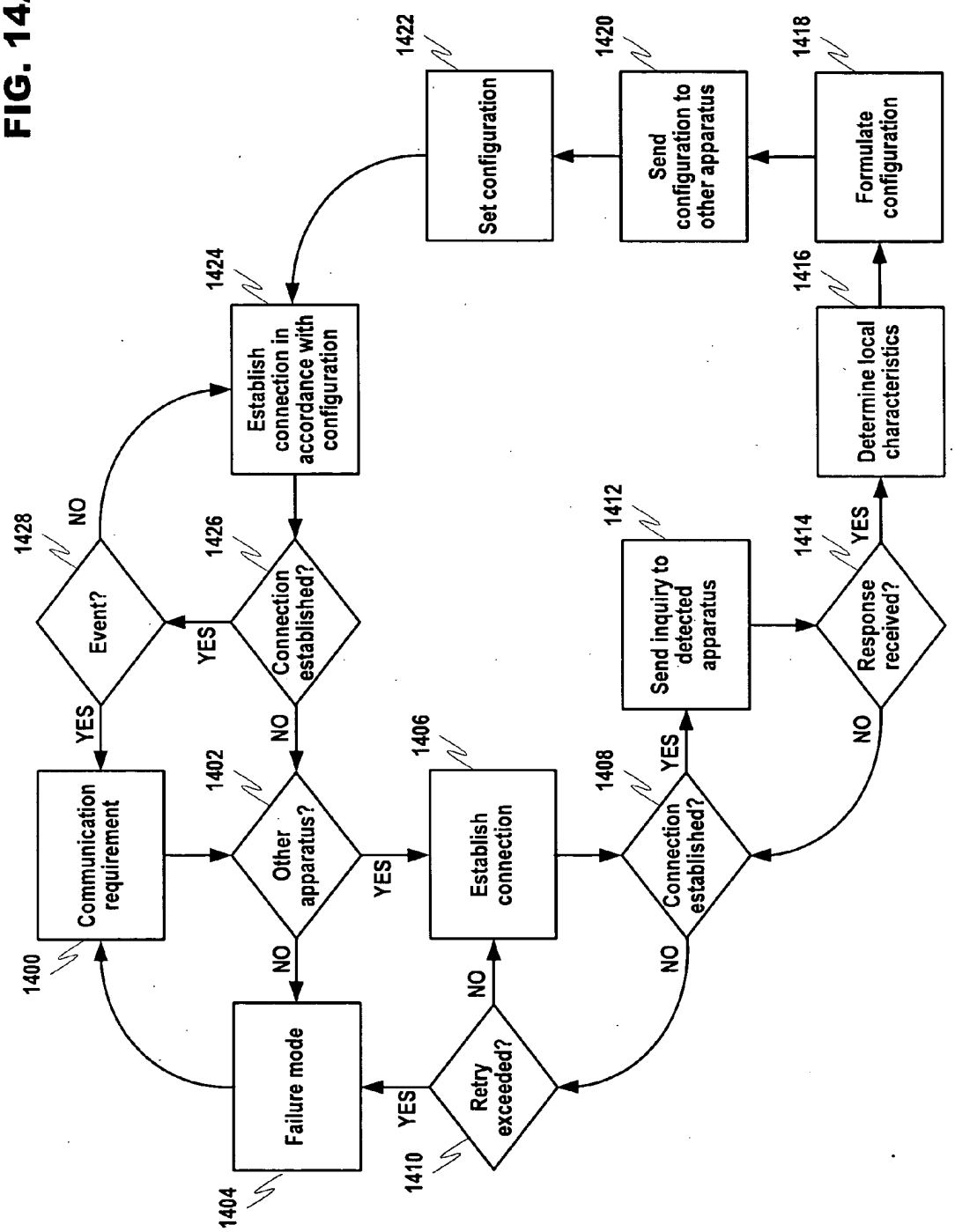
1400
Communication requirement
1402
Other apparatus?
YES
NO
1404
Failure mode
1406
Establish connection
1408
Connection established?
YES
NO
1410
Retry exceeded?
YES
NO
1412
Send inquiry to detected apparatus
1414
Response received?
YES
NO
1416
Determine local characteristics
1418
Formulate configuration
1420
Send configuration to other apparatus
1422
Set configuration
1424
Establish connection in accordance with configuration
1426
Connection established?
YES
NO
1428
Event?
YES
NO

FIG. 14B

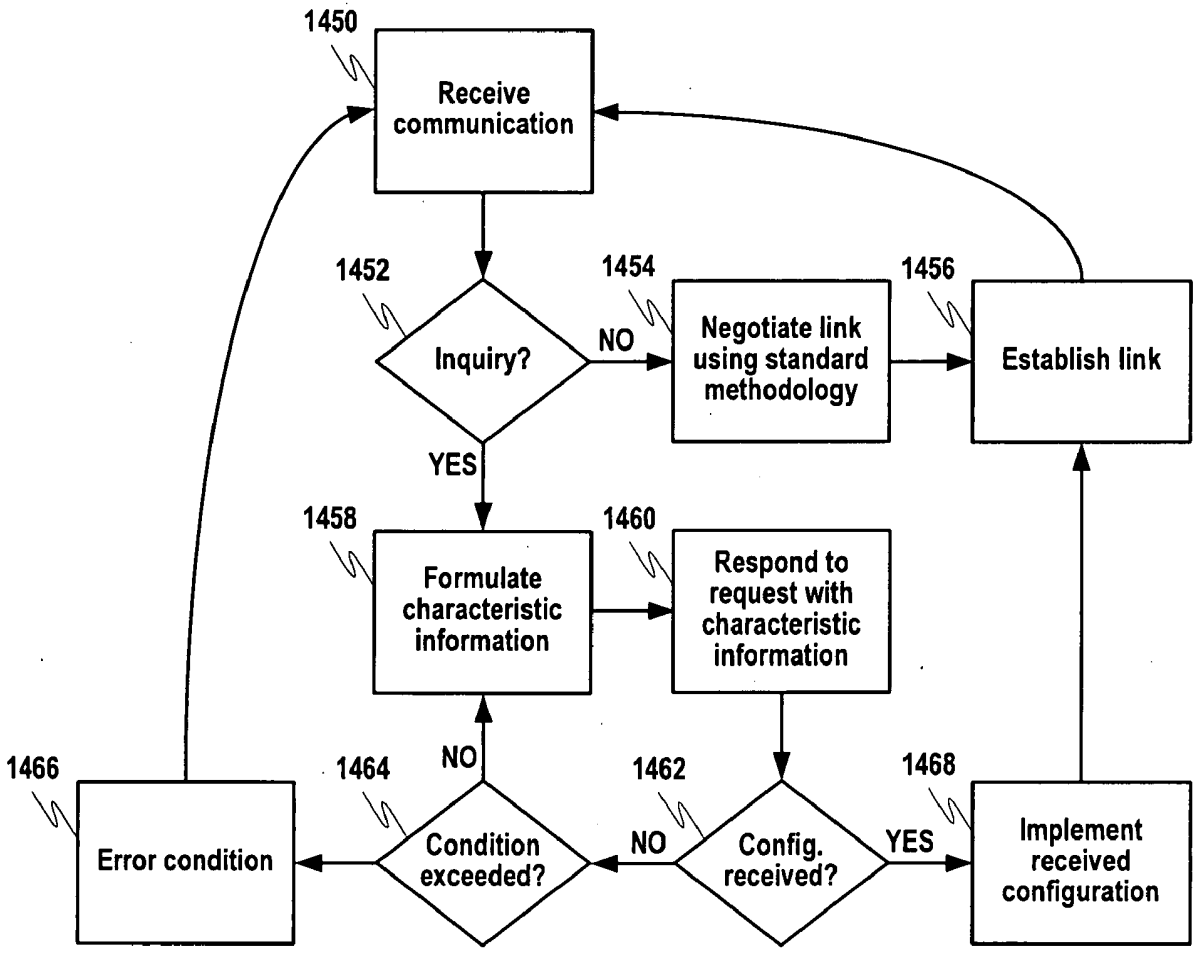
1450
Receive communication
1452
Inquiry?
NO
1454
Negotiate link using standard methodology
1456
Establish link
YES
1458
Formulate characteristic information
1460
Respond to request with characteristic information
1466
Error condition
1464
Condition exceeded?
NO
1462
Config. received?
NO
YES
1468
Implement received configuration

SOFTWARE-DEFINED RADIO CONFIGURATION

BACKGROUND

[0001] 1. Field of Invention

[0002] The present invention relates to wireless communication, and more specifically, to a system for facilitating wireless communication connections between configurable radio devices.

[0003] 2. Background

[0004] Wireless apparatuses continue to proliferate in the global marketplace due to technological improvement in both the quality of communication and device functionality. These wireless communication devices (WCDs) have become common for both personal and business use, allowing users to transmit and receive voice, text and graphical data from a multitude of geographic locations. Communication networks usable by these devices may span different frequencies and transmission distances.

[0005] For example, cellular networks may facilitate WCD communication over large geographic areas. These technologies are commonly divided by generation, starting in the 1970s-1980s with first generation (1 G) analog cellular telephones that provided baseline voice communication, to modern digital handsets. GSM is an example of a widely employed 2 G digital cellular network communicating in the 900 MHZ/1.8 GHZ bands in Europe and at 850 MHz and 1.9 GHZ in the United States. GSM provides voice communication and supports text transmission via the Short Messaging Service (SMS). SMS may transmit and receive text messages of up to 160 characters, while providing data transfer to packet networks, ISDN and POTS users at 9.6 Kbps, while Multimedia Messaging Service (MMS) allows for the transmission of sound, graphics and video files in addition to simple text. Emerging technologies such as Digital Video Broadcasting for Handheld Devices (DVB-H) will make streaming digital video, and other similar content, available for direct transmission to a WCD. While long-range communication networks are a well-accepted means for transmitting and receiving data, due to cost, traffic and legislative concerns, these networks may not be appropriate for all data applications.

[0006] Short-range wireless networks may provide communication solutions that avoid some of the problems seen in large cellular networks. Bluetooth™ is an example of a short-range wireless technology quickly gaining acceptance in the marketplace. A 1 Mbps Bluetooth™ radio may transmit and receives data at a rate of 720 Kbps within a range of 10 meters, and may transmit up to 100 meters with additional power boosting. Enhanced data rate (EDR) technology also available may enable maximum asymmetric data rates of 1448 Kbps for a 2 Mbps connection and 2178 Kbps for a 3 Mbps connection. A plurality of devices within operating range of each other may automatically form a network group called a "piconet". Any apparatus may promote itself to the master of the piconet, allowing it to control data exchanges with up to seven "active" slaves and 255 "parked" slaves. Active slaves may exchange data based on the clock timing of the master, while parked slaves monitor a beacon signal in order to stay synchronized with the master. These apparatuses may continually switch between active communication and power saving modes in order to transmit data to other piconet members. In addition to Bluetooth™ other popular short-range wireless networks include WLAN (of which "Wi-Fi" local access points communicating in accordance with the IEEE 802.11 standard, is an example), WUSB, UWB, ZigBee (802.15.4, 802.15.4a), and UHF RFID.

[0007] Manufacturers may also incorporate resources for providing enhanced functionality in WCDs (e.g., components and/or software for performing close-proximity wireless communication). Sensors, scanners, etc. may be utilized to read visual or electronic information into an apparatus. In an example transaction, users may hold their WCD in proximity to a target, aiming their WCD at an object (e.g., to take a picture) or sweeping the device over a printed tag or document to obtain information. These technologies include machine-readable mediums such as radio frequency identification (RFID), Infra-red (IR) communication, optical character recognition (OCR) and various other types of visual, electronic and magnetic scanning that may be utilized to quickly input desired information into the WCD without the need for manual entry by a user.

[0008] These examples of additional communication functionality may be implemented in apparatuses utilizing various combinations of hardware and/or software. For instance, one or more functions that were previously handled by discrete components (e.g., hardware-based wireless radios) may be handled by more generic software-driven processes. Moreover, the ability to reconfigure software-based modules during runtime may, in some instances, allow a software-based solution to emulate the functionality of multiple traditional hardware modules. The ability to implement flexible configuration may allow one or more hardware components to be omitted from an apparatus in favor of a software-based solution that is configurable to perform the same or similar function, while being more efficient in terms of power, space, etc.

[0009] However, problems can also spawn from the ability to reconfigure software-based modules during runtime. The runtime flexibility of software-driven solutions, while beneficial, can also increase the potential for negatively impacting (e.g., interfering with) other processes also occurring on the executing apparatus, on another apparatus with which communication is desired, etc. Further, software-based solutions must be able to interact with older discrete implementations by accounting for the limitations inherent in these hardware-based solutions.

SUMMARY

[0010] Various embodiments of the present invention are directed to at least a method, computer program product, apparatus and system for configuring communication resources that are at least partially based upon reconfigurable software modules. For example, an apparatus may utilize a plurality of transports for communication, wherein the transports are supported by one or more radio modules. The one or more radio modules may comprise hardware-based radio modules and software-defined radio (SDR) modules including a reconfigurable software element that allows the radio module to emulate the functionality of multiple hardware-based radios. In accordance with at least one embodiment of the present invention, SDR modules in an apparatus may formulate a communication configuration for use in communicating with another apparatus based on remote characteristic information (e.g., information corresponding to the apparatus with which communication is desired) and local characteristic information pertaining to the apparatus.

[0011] In an example implementation, an apparatus may desire to communicate with another apparatus. In order to

configuration, the apparatus may first make an inquiry to the other device utilizing a initialization channel. Initialization channels may be, for example, predefined channels in a wireless transport that are reserved for communication establishment. The inquiry, if successfully received in the other apparatus, may prompt a response message to the inquiring apparatus, the response message including at least remote characteristic information.

[0012] Remote characteristic information may include, for example, information related to the abilities and/or status of the other apparatus, and may further incorporate environmental information concerning possible interference known to (e.g., in the case other transports that are currently being utilized), or sensed by, the other apparatus. A determination may also be made with respect to local characteristic information, wherein local characteristic information may be similar to the remote characteristic information but pertaining instead to the initiating apparatus.

[0013] The initiating apparatus may then formulate a configuration based at least upon the received remote characteristic information and the local characteristic information. In at least one embodiment of the present invention, the configuration may comprise information usable by resources in one or both of the initiating apparatus and the other apparatus for establishing a link between the apparatuses. The configuration may then be sent from the initiating apparatus to the other apparatus (e.g., via the initialization channel), wherein the configuration may be utilized for resource configuration. Similarly, the configuration information already residing on the initiating apparatus may also be utilized for configuring resources. The resulting resource configuration in each apparatus allows for the establishment of communication between the apparatuses, wherein the communication takes into account the condition of each apparatus.

[0014] The foregoing summary includes example embodiments of the present invention that are not intended to be limiting. The above embodiments are used merely to explain selected aspects or steps that may be utilized in implementations of the present invention. However, it is readily apparent that one or more aspects, or steps, pertaining to an example embodiment can be combined with one or more aspects, or steps, of other embodiments to create new embodiments still within the scope of the present invention. Therefore, persons of ordinary skill in the art would appreciate that various embodiments of the present invention may incorporate aspects from other embodiments, or may be implemented in combination with other embodiments.

DESCRIPTION OF DRAWINGS

[0015] Various embodiments of the present invention may be understood in view of the following configuration examples taken in conjunction with the drawings, wherein:

[0016] FIG. **1** discloses an example of a wireless operational environment, including wireless transports having different effective ranges.

[0017] FIG. **2** discloses a modular example of a wireless communication device that may be usable in accordance with at least one embodiment of the present invention.

[0018] FIG. **3** discloses a structural representation of the example previously described with respect to FIG. **2**.

[0019] FIG. **4** discloses an operational example of communication utilizing a wireless transport in accordance with at least one embodiment of the present invention.

[0020] FIG. **5** discloses an operational example wherein interference may occur during the concurrent operation of multiple radio modems within the same apparatus.

[0021] FIG. **6**A discloses a structural example of a wireless communication device including a multiradio controller in accordance with at least one embodiment of the present invention.

[0022] FIG. **6**B discloses a more detailed structural representation of FIG. **6**A including the multiradio controller and the radio modems.

[0023] FIG. **6**C discloses an operational example of a wireless communication device including a multiradio controller in accordance with at least one embodiment of the present invention.

[0024] FIG. **7**A discloses a structural example of a wireless communication device including a multiradio control system in accordance with at least one embodiment of the present invention.

[0025] FIG. **7**B discloses a more detailed structural representation of FIG. **7**A including the multiradio control system and the radio modems.

[0026] FIG. **7**C discloses an operational example of a wireless communication device including a multiradio control system in accordance with at least one embodiment of the present invention.

[0027] FIG. **8**A discloses a structural example of a wireless communication device including a distributed multiradio control system in accordance with at least one embodiment of the present invention.

[0028] FIG. **8**B discloses a more detailed structural representation of FIG. **8**A including the distributed multiradio control system and the radio modems.

[0029] FIG. **8**C discloses an operational example of a wireless communication device including a distributed multiradio control system in accordance with at least one embodiment of the present invention.

[0030] FIG. **9**A discloses a structural example of a wireless communication device including a distributed multiradio control system in accordance with an alternative embodiment of the present invention.

[0031] FIG. **9**B discloses a more detailed structural representation of FIG. **9**A including the distributed multiradio control system and the radio modems.

[0032] FIG. **9**C discloses an operational example of a wireless communication device including a distributed multiradio control system in accordance with the alternative embodiment of the present invention disclosed in FIG. **9**A.

[0033] FIG. **10** discloses an example of an information packet usable with at least one embodiment of the present invention.

[0034] FIG. **11** discloses an example of a software-defined radio module usable in implementing various embodiments of the present invention.

[0035] FIG. **12** discloses an example modular representation of the software-defined radio module disclosed in FIG. **11**.

[0036] FIG. **13** discloses an operational example in accordance with at least one embodiment of the present invention.

[0037] FIG. **14**A discloses a flowchart for an example configuration process from the initiator side in accordance with at least one embodiment of the present invention.

[0038] FIG. **14**B discloses a flowchart for an example configuration process from the receiving side in accordance with at least one embodiment of the present invention.

DESCRIPTION OF EXAMPLE EMBODIMENTS

[0039] While the present invention has been described herein in terms of a variety of embodiment examples, changes can be made therein without departing from the spirit and scope of the invention, as set forth in the appended claims.

I. Wireless Communication Over Different Communication Networks

[0040] Wireless communication devices may transmit and receive information over a wide array of wireless communication networks, each with different advantages regarding speed, range, quality (error correction), security (encoding), etc. These characteristics may dictate, for example, the amount of information that can be transferred to a receiving apparatus, and the duration of the information transfer. FIG. **1** includes an example of a WCD and how it may interact with various types of wireless networks.

[0041] In FIG. **1**, user **110** possesses WCD **100**. The apparatus shown is a high functionality portable device, however, usable apparatuses span a range from basic cellular handsets to more wirelessly enabled palmtop or laptop computers. Close-proximity communication **130** may include close proximity inter-apparatus communication or transponder-type interactions wherein only the scanning device may require a power source. In example transponder interaction, WCD **100** may scan source **120** via short-range communication. A transponder in source **120** may use the energy and/or clock signal contained within the scanning signal, as in the case of RFID communication, to respond with data stored in the transponder. Machine readable technologies may have an effective transmission range on the order of ten feet, and may be able to deliver stored data in amounts from a bit to over a megabit (or 125 Kbytes) relatively quickly. These characteristics make such technologies well suited for identification purposes, such as in receiving an account number for a public transportation provider, a key code for an automatic electronic door lock, an account number for a credit or debit transaction, etc.

[0042] The transmission range between two apparatuses may be extended if both device can participate in powered communication using more robust wireless transports. Short-range active communication **140** may include applications wherein the sending and receiving devices are both active. An example situation would include user **110** coming within effective transmission range of a Bluetooth™, WLAN, UWB, WUSB, etc. access point. In the case of Bluetooth™, a network may automatically be established to transmit information to WCD **100** possessed by user **110**. The amount of information that can be conveyed is unlimited, except that it must all be transferred in the time when user **110** is within effective transmission range of the access point. The higher complexity attributed to these wireless transports means that additional time may be required when establishing an initial connection to WCD **100**, which may be increased if a large number of devices are queued for service in the area proximate to the access point. The transmission range of these transports may vary depending on the technology and may, for example, extend from 30 ft. to over 300 ft. with additional power boosting.

[0043] Long-range networks **150** may be used to provide virtually uninterrupted communication coverage for WCD **100**. Land-based radio stations or satellites may be used to relay various communication transactions worldwide. While these systems are extremely functional, the use of these systems is often charged on a per-minute basis to user **110**, not including additional charges for data transfer (e.g., wireless Internet access). Further, the regulations covering these systems may cause additional overhead for both the users and providers, making the use of these systems more cumbersome.

II. Wireless Communication Device

[0044] As previously described, various embodiments of the present invention may be implemented using a variety of wireless communication equipment. Therefore, it is important to understand the communication tools available to user **110** before exploring the present invention. For example, in the case of a cellular telephone or other handheld wireless devices, the integrated data handling capabilities of the device play an important role in facilitating transactions between the transmitting and receiving devices.

[0045] FIG. **2** discloses an example of a modular layout for an apparatus usable with the present invention. WCD **100** is broken down into modules representing the functional aspects of the device. These functions may be performed by the various combinations of software and/or hardware components discussed below.

[0046] Control module **210** may regulate the operation of the apparatus. Inputs may be received from various other modules included within WCD **100**. For example, interference sensing module **220** may use various techniques to detect any sources of environmental interference within transmission range of the apparatus. Control module **210** may interpret this data, and in response, may control other modules in WCD **100**.

[0047] Communications module **230** may incorporate all of the communication aspects of WCD **100**. As shown in FIG. **2**, communications module **230** may include, for example, long-range communications module **232**, short-range communications module **234** and close-proximity module **236**. Communications module **230** may utilize one or more of these sub-modules to receive a multitude of different types of communication from both local and long distance sources, and to transmit data to recipient devices within the transmission range of WCD **100**. Communications module **230** may be triggered by control module **210**, or by control resources local to the module responding to sensed messages, environmental influences and/or other devices in proximity to WCD **100**.

[0048] User interface module **240** may comprise visual, audible and tactile components (e.g., hardware and/or software) that allow user **110** to receive data from, and enter data into, the device. For instance, data entered by user **110** may be interpreted by control module **210** to affect the behavior of WCD **100**. User-inputted data may also be transmitted by communications module **230** to other devices within effective transmission range. Other devices in transmission range may also send information to WCD **100** via communications module **230**, and control module **210** may cause this information to be transferred to user interface module **240** for presentment to the user.

[0049] Applications module **250** may comprise other hardware and/or software applications on WCD **100**. These appli-

cations may include sensors, interfaces, utilities, interpreters, data applications, etc., and may be invoked by control module **210** to read information provided by the various modules, and in turn, may supply information to requesting modules in WCD **100**.

[0050] In accordance with at least one embodiment of the present invention, FIG. **3** discloses an example of a structural layout usable in implementing the functionality of the modular system previously described with respect to FIG. **2**. Processor **300** may control overall device operation. As shown in FIG. **3**, processor **300** may be coupled to one or more communications sections **310**, **320** and **340**. Processor **300** may further be implemented utilizing one or more microprocessors that are each capable of executing software instructions stored in memory **330**.

[0051] Memory **330** may include various types of random access memory (RAM), read only memory (ROM). Examples of usable memory types may include, for example, fixed computer readable media such electronic components and/or modules in stalled in the apparatus. Further, removable computer-readable medium on which computer executable code is embodied or recorded may be considered part of memory **330**. Removable media may include electronic (e.g., Flash), magnetic (e.g., removable disks, drives, etc.), optical (e.g., CD-ROM, DVD, etc.) media, or any other technology that may be configured to store information in the form of data and software components (also referred to as modules). Data stored by memory **330** may be associated with particular software components. In addition, this data may be associated with databases, such as a bookmark database or a business database for scheduling, email, etc.

[0052] The software components stored by memory **330** include instructions that can be executed by processor **300**. Various types of software components may be stored in memory **330**. For instance, memory **330** may store software components that control the overall operation of WCD **100** (e.g., in the form of an operating system) and may also include more specialized software modules configured to manage particular functions such as communication sections **310**, **320** and **340**. Application-related software modules may also be stored in Memory **330**. Examples of these software components may include a firewall, a service guide manager, a bookmark database, user interface manager, user-installed applications and communication utilities modules required to support WCD **100**.

[0053] Long-range communications **310** may manage functionality related to the wireless exchange of information over large geographic areas (such as cellular networks) via an antenna. Communication transactions may be conducted using technologies from the previously described 1 G to 3 G. In addition to basic voice communication (e.g., via GSM), long-range communications **310** may operate to establish data communication sessions, such as General Packet Radio Service (GPRS) sessions and/or Universal Mobile Telecommunications System (UMTS) sessions. Also, long-range communications **310** may operate to transmit and receive messages, such as short messaging service (SMS) messages and/or multimedia messaging service (MMS) messages.

[0054] As a subset of long-range communications **310**, or alternatively operating as an independent module separately connected to processor **300**, transmission receiver **312** may allow WCD **100** to receive transmission messages via mediums such as Digital Video Broadcast for Handheld Devices (DVB-H). In at least one example scenario, transmissions may be encoded so that only certain receiving devices may access the transmission content, and may contain text, audio or video information. Further, WCD **100** may receive these transmissions and use information contained within the transmission signal to determine if the device is permitted to view the received content.

[0055] Short-range communications **320** is responsible for functions involving the exchange of information across short-range wireless networks. As described above and in FIG. **3**, examples of wireless transports that may be categorized under short-range communications **320** are not limited to Bluetooth™, WLAN, UWB Ultra-Low Power Bluetooth™ (ULP-BT), wireless USB, Zigbee and Ultra High Frequency Radio Frequency communication (UHF RFID). Accordingly, short-range communications **320** performs functions related to the establishment of short-range connections, as well as processing related to the transmission and reception of information via such connections.

[0056] Close-proximity communications **340** may provide functionality related to the short-range scanning of machine-readable data. Near Field Communication, or NFC, apparatuses may be included in this category. For example, processor **300** may control components in close-proximity communication **340** to generate RF signals for activating an RFID transponder, and may in turn control the reception of signals from an RFID transponder. Other short-range scanning methods for reading machine-readable data that may be supported by the close-proximity **340** are not limited to IR communication, linear and 2-D (e.g., QR) bar code readers (including processes related to interpreting UPC labels), and optical character recognition devices for reading magnetic, UV, conductive or other types of coded data that may be provided in a tag using suitable ink. To support the scanning of machine-readable data by close-proximity communications **340**, WCD **100** may, for example, incorporate components such as optical detectors, magnetic detectors, CCDs or other sensors known in the art for interpreting machine-readable information.

[0057] As further shown in FIG. **3**, user interface **350** may also be coupled to processor **300**. User interface **350** facilitates the exchange of information with a user. The example of FIG. **3** discloses a user interface **350** that includes a user input **360** and a user output **370**. User input **360** may include one or more components that allow user **110** to input information. Examples of such components include keypads, touch screens, and microphones. User output **370** allows a user to receive information from the device. Thus, user output portion **370** may include various components, such as a display, light emitting diodes (LED), tactile emitters and one or more audio speakers. Example displays include liquid crystal displays (LCDs), and other video displays.

[0058] WCD **100** may further include one or more transponders **380**. A transponder may essentially comprise a passive device that may be programmed by processor **300** with information to be delivered in response to a scan from an outside source. For example, an RFID scanner mounted in an entryway may continuously emit radio frequency waves. When a person with a device containing transponder **380** walks through the door, the transponder may be energized, causing it to respond with information identifying the device, the person, etc. In addition, scanners can be mounted (e.g., as previously discussed with regard to examples of close-proximity communications **340**) in WCD **100** so that it can read information from other transponders in the vicinity.

[0059] Hardware corresponding to communications sections **310**, **312**, **320** and **340** provide for the transmission and reception of signals. Accordingly, these portions may include components (e.g., electronics) that perform functions, such as modulation, demodulation, amplification, and filtering. These portions may be locally controlled, or controlled by processor **300** in accordance with software communication components stored in memory **330**. The elements of FIG. **3** may further be constituted and/or coupled in accordance with various techniques in order to produce the functionality described in FIG. **2**. In one example configuration, processor **300**, communications sections **310**, **312** and **320**, memory **330**, close-proximity communications **340**, user interface **350**, transponder **380**, etc. may comprise separate components that are coupled together via one or more wired and/or wireless bus interfaces. Alternatively, any or all individual components may be replaced by integrated circuits in the form of a programmable logic device, gate array, ASIC, multi-chip module, etc. that may be programmed to replicate the functions of the stand-alone devices. In addition, each of these components may be coupled to a power source, such as a removable and/or rechargeable battery (not shown).

[0060] User interface **350** may allow user **110** to interact with various software components installed on the apparatus (e.g., contained in memory **330**). The software components may, for example, provide functionality such as operating system modules, applications for productivity, entertainment, etc., communication utilities for supporting long-range communications **310**, short-range communications **320**, close-proximity communications **340**, etc. Software components may include routines that, for example, may be configured to provide data processing, routing, transmission, reception, etc. Various programming mediums/languages may be used (Wireless Application (WAP), Hypertext Markup Language (HTML) variants like Compact HTML (CHTML), etc.)

III. Example Operation of a Wireless Communication Device Including Potential Interference Problems Encountered.

[0061] FIG. **4** discloses an example of a process stack, in accordance with at least one embodiment of the present invention, for use in explaining operation of an apparatus. At the top level **400**, user **110** interacts with WCD **100**. This example involves user **110** entering information via user input **360** and receiving information from user output **370** in order to activate functionality in application level **410**. In the application level, programs related to specific functionality within the device interact with both the user and the system level. These programs include applications for visual information (e.g., web browser, DVB-H receiver, etc.), audio information (e.g., cellular telephone, voice mail, conferencing software, DAB or analog radio receiver, etc.), recording information (e.g., digital photography software, word processing, scheduling, etc.) or other information processing. Actions initiated in application level **410** may require information to be sent from, or received into, WCD **100**. In FIG. **4**, the transmission of data to a recipient apparatus via Bluetooth™ is being requested. As a result, application level **410** may then call resources in the system level to initiate the required processing and routing of data.

[0062] System level **420** may process and route data requests for transmission. Processing may include, for example, the calculation, translation, conversion and/or packetizing the data. The data may then be routed to an appropriate communication resource in the service level. If the desired communication resource is active and available in the service level **430**, the packets may be routed to a radio modem for delivery via wireless transmission. In some configurations radio modems may comprise support hardware and/or software in addition to the actual modem component, and therefore, radio modems may interchangeably be referred to as radio modules herein. Apparatuses usable in implementing various embodiments of the present invention may include a plurality of these radio modules that are configured to operate using different wireless mediums. In FIG. **4**, "modem **4**" may be activated and able to send packets using Bluetooth™ communication. However, a radio module (as a hardware resource) need not be dedicated to a specific wireless medium, and may be used for different types of communication depending on the requirements of the wireless transport and the hardware characteristics of the radio modem or module.

[0063] FIG. **5** discloses a situation wherein the above described example operational process may cause more than one radio modem to become active. In this example, WCD **100** may both transmit and receive information via a multitude of transports in order to interact with various secondary devices such as those grouped at **500**. For example, secondary devices may include cellular handsets communicating via long-range wireless communication like GSM, wireless headsets communicating via Bluetooth™, Internet access points communicating via WLAN, etc.

[0064] Problems may occur when some or all of these communications occur simultaneously. As further shown in FIG. **5**, multiple modems operating simultaneously may cause interference for each other. Such a situation may be encountered when WCD **100** is communicating with more than one external device (as previously described). In an extreme example, devices simultaneously communicating via Bluetooth™, WLAN and wireless USB would encounter substantial overlap since all of these wireless transports operate in the 2.4 GHz band. The interference, shown as an overlapping portion of the fields depicted in FIG. **5**, would cause packets to be lost and the need for retransmission of these lost packets. Retransmission requires that future time slots be used to retransmit lost information, and therefore, overall communication performance will at least be reduced, if the signal is not lost completely. The present invention, in accordance with at least one embodiment, seeks to manage problematic situations where possibly conflicting communications may occur simultaneously so that interference is minimized or avoided, resulting in increased speed and Quality of Service (QoS).

IV. A Wireless Communication Device Including a Multiradio Controller

[0065] In an attempt to better manage communication in WCD **100**, a controller dedicated to managing wireless communication may be introduced. WCD **100**, as shown in FIG. **6**A, includes a multiradio controller (MRC) **600** in accordance with at least one embodiment of the present invention. MRC **600** may be coupled to the master control system of WCD **100**, enabling MRC **600** to communicate with radio modems or other similar devices in communications modules **310** **312**, **320** and **340** within WCD **100**.

[0066] FIG. **6**B discloses in detail at least one embodiment of WCD **100**, which may include multiradio controller (MRC) **600** introduced in FIG. **6**A in accordance with at least one embodiment of the present invention. MRC **600** includes common interface **620** by which information may be sent or

received through master control system **640**. As set forth above, radio modems **610** and other devices **630** may also be referred to as "modules" in this disclosure as they may contain supporting hardware and/or software resources in addition to the modem itself. These resources may include control, interface and/or processing resources. Radio modems **610** or similar communication devices **630** (e.g., an RFID scanner for scanning machine-readable information) may include some sort of common interface **620** for communicating with master control system **640**. As a result, all information, commands, etc. occurring between radio modems **610**, similar devices **630** and MRC **600** are conveyed by the communication resources of master control system **640**. The possible effect of sharing communication resources with all the other functional modules within WCD **100** will be discussed with respect to FIG. **6**C.

[0067] FIG. **6**C discloses an operational diagram similar to FIG. **4** including the effect of MRC **600** in accordance with at least one embodiment of the present invention. In this system MRC **600** may receive operational data from the master operating system of WCD **100**, concerning for example applications running in application level **410**, and status data from the various radio communication devices in service level **430**. MRC **600** may use this information to issue scheduling commands to the communication devices in service level **430** in an attempt to avoid communication problems. However, problems may occur when the operations of WCD **100** are fully employed. Since the various applications in application level **410**, the operating system in system level **420**, the communication devices in service level **430** and MRC **600** must all share the same communication system, delays may occur when all aspects of WCD **100** are trying to communicate on the common interface system **620**. As a result, delay sensitive information regarding both communication resource status information and radio modem **610** control information may become delayed, nullifying any beneficial effect from MRC **600**. Therefore, a system better able to handle the differentiation and routing of delay sensitive information is required if the beneficial effect of MRC **600** is to be realized.

V. A Wireless Communication Device Including a Multiradio Control System.

[0068] In accordance with at least one embodiment of the present invention, FIG. **7**A introduces MRC **600** as part of multiradio control system (MCS) **700**. MCS **700** may directly link communication resources in modules **310**, **312**, **320** and **340** to MRC **600**. In this way, MCS **700** may be configured to provide a dedicated low-traffic communication structure for carrying delay sensitive information both to and from MRC **600**.

[0069] Additional detail is shown in FIG. **7**B. MCS **700** forms a direct link between MRC **600** and the communication resources of WCD **100**. This link may be established by a system of dedicated MCS interfaces **710** and **760**. For example, MCS interface **760** may be coupled to MRC **600**. MCS Interfaces **710** may connect radio modems **610** and other similar communication devices **630** to MCS **700** in order to form an information conveyance for allowing delay sensitive information to travel to and from MRC **600**. Therefore, MRC **600** operation may no longer be influenced by the processing load of master control system **640**. As a result, any information still communicated by master control system **640** to and from MRC **600** may be deemed delay tolerant, and therefore, the actual arrival time of this information does not substantially influence system performance. On the other hand, all delay sensitive information is directed to MCS **700**, and therefore is insulated from the loading of the master control system.

[0070] The effect of MCS **700** is seen in FIG. **7**C in accordance with at least one embodiment of the present invention. Information may now be received in MRC **600** from at least two sources. System level **420** may continue to provide information to MRC **600** through master control system **640**. In addition, service level **430** may specifically provide delay sensitive information conveyed by MCS **700**. MRC **600** may distinguish between these two classes of information and act accordingly. Delay tolerant information may include information that typically does not change when a radio modem is actively engaged in communication, such as radio mode information (e.g., GPRS, Bluetooth™, WLAN, etc.), priority information that may be defined by user settings, the specific service the radio is driving (QoS, real time/non real time), etc. Since delay tolerant information changes infrequently, it may be delivered in due course by master control system **640** of WCD **100**. Alternatively, delay sensitive (or time sensitive) information includes at least modem operational information that frequently changes during the course of a wireless connection, and therefore, requires immediate update. As a result, delay sensitive information may need to be delivered directly from the plurality of radio modems **610** through the MCS interfaces **710** and **760** to MRC **600**, and may include radio modem synchronization information. Delay sensitive information may be provided in response to requests by MRC **600**, or may be delivered as a result of a change in radio modem settings during transmission as discussed below with respect to synchronization.

VI. A Wireless Communication Device Including a Distributed Multiradio Control System.

[0071] FIG. **8**A discloses an alternative configuration in accordance with at least one embodiment of the present invention, wherein a distributed multiradio control system (MCS) **700** is introduced into WCD **100**. Distributed MCS **700** may, in some cases, be deemed to provide an advantage over a centralized MRC **600** by distributing these control features into already necessary components within WCD **100**. As a result, a substantial amount of the communication management operations may be localized to the various communication resources, such as radio modems (modules) **610**, reducing the overall amount of control command traffic in WCD **100**.

[0072] MCS **700**, in this example, may be implemented utilizing a variety of bus structures, including the I^2C interface commonly found in portable electronic devices, as well as emerging standards such as SLIMbus that are now under development. I^2C is a multi-master bus, wherein multiple devices can be connected to the same bus and each one can act as a master through initiating a data transfer. An I^2C bus contains at least two communication lines, an information line and a clock line. When an apparatus has data to transmit, it assumes a master role and transmits both its clock signal and information to a recipient device. On the other hand, SLIMbus uses a separate, non-differential physical layer that runs at rates of 50 Mbits/s or slower over just one lane. It is being developed by the Mobile Industry Processor Interface (MIPI) Alliance to replace today's I^2C and I^2S interfaces while offering more features and requiring the same or less power than the two combined.

[0073] MCS **700** directly links distributed control components **702** in modules **310**, **312**, **320** and **340**. Another distributed control component **704** may reside in master control system **640** of WCD **100**. It is important to note that distributed control component **704** shown in processor **300** is not limited only to the disclosed embodiment, and may reside in any appropriate system module within WCD **100**. The addition of MCS **700** provides a dedicated low-traffic communication structure for carrying delay sensitive information both to and from the various distributed control components **702**.

[0074] The example configuration disclosed in FIG. **8**A is described further with respect to FIG. **8**B. MCS **700** forms a direct link between distributed control components **702** within WCD **100**. Distributed control components **702** in radio modems **610** (together forming a "module") may, for example, consist of MCS interface **710**, radio activity controller **720** and synchronizer **730**. Radio activity controller **720** uses MCS interface **710** to communicate with distributed control components in other radio modems **610**. Synchronizer **730** may be utilized to obtain timing information from radio modem **610** to satisfy synchronization requests from any of the distributed control components **702**. Radio activity controller **702** may also obtain information from master control system **640** (e.g., from distributed control component **704**) through common interface **620**. As a result, any information communicated by master control system **640** to radio activity controller **720** through common interface **620** may be deemed delay tolerant, and therefore, the actual arrival time of this information does not substantially influence communication system performance. On the other hand, all delay sensitive information may be conveyed by MCS **700**, and therefore is insulated from master control system overloading.

[0075] As previously stated, distributed control component **704** may exist within master control system **640**. Some aspects of this component may reside in processor **300** as, for example, a running software routine that monitors and coordinates the behavior of radio activity controllers **720**. Processor **300** is shown to contain priority controller **740**. Priority controller **740** may be utilized to monitor active radio modems **610** in order to determine priority amongst these devices. Priority may be determined by rules and/or conditions stored in priority controller **740**. Modems that become active may request priority information from priority controller **740**. Further, modems that go inactive may notify priority controller **740** so that the relative priority of the remaining active radio modems **610** may be adjusted accordingly. Priority information is usually not considered delay sensitive because it is mainly updated when radio modems **610** activate/deactivate, and therefore, does not frequently change during the course of an active communication connection in radio modems **610**. In various embodiments of the present invention, this information may be conveyed to radio modems **610** using common interface system **620**.

[0076] At least one impact of a distributed control MCS **700** is seen in FIG. **8**C. System level **420** may continue to provide delay tolerant information to distributed control components **702** through master control system **640**. In addition, distributed control components **702** in service level **430**, such as modem activity controllers **720**, may exchange delay sensitive information with each other via MCS **700**. Each distributed control component **702** may distinguish between these two classes of information and act accordingly. Delay tolerant information may include information that typically does not change when a radio modem is actively engaged in communication, such as radio mode information (e.g., GPRS, Bluetooth™, WLAN, etc.), priority information that may be defined by user settings, the specific service the radio is driving (QoS, real time/non real time), etc. Since delay tolerant information changes infrequently, it may be delivered in due course by master control system **640** of WCD **100**. Alternatively, delay sensitive (or time sensitive) information may include at least modem operational information that frequently changes during the course of a wireless connection, and therefore, requires immediate update. Delay sensitive information needs to be delivered directly between distributed control components **702**, and may include radio modem synchronization and activity control information. Delay sensitive information may be provided in response to a request, or may be delivered as a result of a change in radio modem, which will be discussed with respect to synchronization below.

[0077] MCS interface **710** may be used to (1) Exchange synchronization information, and (2) Transmit identification or prioritization information between various radio activity controllers **720**. In addition, as previously stated, MCS interface **710** may be utilized for communicating the radio parameters that are delay sensitive from a controlling point of view. MCS interface **710** can be shared between different radio modems (multipoint) but it cannot be shared with any other functionality that could limit the usage of MCS interface **710** from a latency point of view.

[0078] The control signals sent on MCS **700** that may enable/disable a radio modem **610** should be based upon a modem's periodic events. Each radio activity controller **720** may obtain this information about a radio modem's periodic events from synchronizer **730**. This kind of event can be, for example, frame clock event in GSM (4.615 ms), slot clock event in Bluetooth™ (625 us) or targeted beacon transmission time in WLAN (100 ms) or any multiple of these. A radio modem **610** may send its synchronization indications when (1) Any radio activity controller **720** requests it, (2) a radio modem internal time reference is changed (e.g. due to handover or handoff). The latency requirement for the synchronization signal is not critical as long as the delay is constant within a few microseconds. The fixed delays can be taken into account in the scheduling logic of radio activity controller **710**.

[0079] For predictive wireless communication mediums, the radio modem activity control may be based on the knowledge of when the active radio modems **610** are about to transmit (or receive) in the specific connection mode in which the radios are currently operating. The connection mode of each radio modem **610** may be mapped to the time domain operation in their respective radio activity controller **720**. As an example, for a GSM speech connection, priority controller **740** may have knowledge about all traffic patterns of GSM. This information may be transferred to the appropriate radio activity controller **720** when radio modem **610** becomes active, which may then recognize that the speech connection in GSM includes one transmission slot of length 577 μs, followed by an empty slot after which is the reception slot of 577 μs, two empty slots, monitoring (RX on), two empty slots, and then it repeats. Dual transfer mode means two transmission slots, empty slot, reception slot, empty slot, monitoring and two empty slots. When all traffic patterns that are known a priori by the radio activity controller **720**, it only needs to know when the transmission slot occurs in time to

gain knowledge of when the GSM radio modem is active. This information may be obtained by synchronizer **730**. When the active radio modem **610** is about to transmit (or receive) it must check every time whether the modem activity control signal from its respective radio activity controller **720** permits the communication. Radio activity controller **720** is always either allowing or disabling the transmission of one full radio transmission block (e.g. GSM slot).

VII. An Example of an Alternative Distributed Multiradio Control System.

[0080] An alternative distributed control configuration, in accordance with at least one embodiment of the present invention, is disclosed in FIG. **9**A-**9**C. In FIG. **9**A, distributed control components **702** continue to be linked by MCS **700**. However, now distributed control component **704** may also be directly coupled to distributed control components **702** via an MCS interface. As a result, distributed control component **704** may also utilize and benefit from MCS **700** for transactions involving the various communication components of WCD **100**.

[0081] Referring now to FIG. **9**B, the inclusion of distributed control component **704** onto MCS **700** is shown in more detail. Distributed control component **704** includes at least priority controller **740** coupled to MCS interface **750**. MCS interface **750** may allow priority controller **740** to send information to, and receive information from, radio activity controllers **720** via a low-traffic connection dedicated to the coordination of communication resources in WCD **100**. As previously stated, the information provided by priority controller **740** may not be deemed delay sensitive information, however, the provision of priority information to radio activity controllers **720** via MCS **700** may improve the overall communication efficiency of WCD **100**. Performance may improve because quicker communication between distributed control components **702** and **704** may result in faster relative priority resolution in radio activity controllers **720**. Further, common interface system **620** of WCD **100** may be relieved of having to accommodate communication traffic from distributed control component **704**, reducing the overall communication load in master control system **640**. Another benefit may be realized in communication control flexibility in WCD **100**. New features may be introduced into priority controller **740** without worrying about whether the messaging between control components will be delay tolerant or sensitive because an MCS interface **710** is already available at this location.

[0082] FIG. **9**C discloses possible operational effects on communication in WCD **100** in view of the enhancements implemented in the current alternative embodiment of the present invention. The addition of an alternative route for radio modem control information to flow between distributed control components **702** and **704** may both improve the communication management of radio activity controllers **720** and lessen the burden on master control system **640**. In this embodiment, all distributed control components of MCS **700** are linked by a dedicated control interface, which provides immunity to communication coordination control messaging in WCD **100** when the master control system **640** is experiencing elevated transactional demands.

[0083] An example message packet **900**, in accordance with various embodiments of the present invention, is disclosed in FIG. **10**. Message packet **900** may include, for example, activity pattern information that may be formulated by MRC **600** or radio activity controller **720**. An example data payload of packet **900** may include at least Message ID information, allowed/disallowed transmission (Tx) period information, allowed/disallowed reception (Rx) period information, Tx Rx periodicity (how often the Tx Rx activities contained in the period information occur), and validity information describing when the activity pattern becomes valid and whether the new activity pattern is replacing or added to the existing one. The data payload of packet **900**, as shown, may consist of multiple allowed/disallowed periods for transmission or reception (e.g., Tx period 1, 2 . . .) each containing at least a period start time and a period end time during which radio modem **610** may either be permitted or prevented from executing a communication activity. While the distributed example of MCS **700** may allow radio modem control activity to be controlled real-time (e.g., more control messages with finer granularity), the ability to include multiple allowed/disallowed periods into a single message packet **900** may support radio activity controllers **720** in scheduling radio modem behavior for longer periods of time, which may result in a reduction in message traffic. Further, changes in radio modem **610** activity patterns may be amended using the validity information in each message packet **900**.

[0084] The modem activity control signal (e.g., packet **900**) may be formulated by MRC **600** or radio activity controller **720** and transmitted on MCS **700**. The signal includes activity periods for Tx and Rx separately, and the periodicity of the activity for the radio modem **610**. While the native radio modem clock is the controlling time domain (never overwritten), the time reference utilized in synchronizing the activity periods to current radio modem operation may be based on one of at least two standards. In a first example, a transmission period may start after a pre-defined amount of synchronization events have occurred in radio modem **610**. Alternatively, all timing for MRC **600** or between distributed control components **702** may be standardized around the system clock for WCD **100**. Advantages and disadvantages exist for both solutions. Using a defined number of modem synchronization events is beneficial because then all timing is closely aligned with the radio modem clock. However, this strategy may be more complicated to implement than basing timing on the system clock. On the other hand, while timing based on the system clock may be easier to implement as a standard, conversion to modem clock timing must necessarily be implemented whenever a new activity pattern is installed in radio modem **610**.

[0085] The activity period may be indicated as start and stop times. If there is only one active connection, or if there is no need to schedule the active connections, the modem activity control signal may be set always on allowing the radio modems to operate without restriction. The radio modem **610** should check whether the transmission or reception is allowed before attempting actual communication. The activity end time can be used to check the synchronization. Once the radio modem **610** has ended the transaction (slot/packet/burst), it can check whether the activity signal is still set (it should be due to margins). If this is not the case, the radio modem **610** can initiate a new synchronization with MRC **600** or with radio activity controller **720** through synchronizer **730**. The same thing may happen if a radio modem time reference or connection mode changes. A problem may occur if radio activity controller **720** runs out of the modem synchronization and starts to apply modem transmission/reception restrictions at the wrong time. Due to this, modem syn-

chronization signals need to be updated periodically. The more active wireless connections, the more accuracy is required in synchronization information.

VIII. Radio Modem Interface to Other Devices.

[0086] As a part of information acquisition services, MCS interface **710** may need to send information to MRC **600** (or radio activity controllers **720**) about periodic events of the radio modems **610**. Using its MCS interface **710**, the radio modem **610** may indicate a time instance of a periodic event related to its operation. In practice these instances may include times when radio modem **610** is active and may be preparing to communicate or communicating. Events occurring prior to or during a transmission or reception mode may be used as a time reference (e.g., in case of GSM, the frame edge may be indicated in a modem that is not necessarily transmitting or receiving at that moment, but we know based on the frame clock that the modem is going to transmit [x]ms after the frame clock edge). Basic principle for such timing indications is that the event is periodic in nature. Every incident needs not to be indicated, but the MRC **600** may calculate intermediate incidents itself. In order for that to be possible, the controller may also require other relevant information about the event, e.g. periodicity and duration. This information may be either embedded in the indication or the controller may get it by other means. Most importantly, timing indications need to be such that the controller can acquire a radio modem's basic periodicity and timing. The timing of an event may either be in the indication itself, or it may be implicitly defined from the indication information by MRC **600** (or radio activity controller **720**).

[0087] In general terms these timing indications need to be provided on periodic events like: schedule broadcasts from a base station (typically TDMA/MAC frame boundaries) and own periodic transmission or reception periods (typically Tx/Rx slots). Those notifications need to be issued by the radio modem **610**: (T) on network entry (i.e. modem acquires network synchrony), (2) on periodic event timing change e.g. due to a handoff or handover and (3) as per the policy and configuration settings in the multiradio controller (monolithic or distributed).

[0088] In at least one embodiment of the present invention, various messages that are exchanged between the aforementioned communication components in WCD **100** may be used to dictate behavior on both a local (radio modem level) and global (WCD level) basis. MRC **600** or radio activity controller **720** may deliver a schedule to radio modem **610** with the intent of controlling that specific modem, however, radio modem **610** may not be compelled to conform to this schedule. The basic principle is that radio modem **610** is not only operating according to multiradio control information (e.g., operates only when MRC **600** allows) but is also performing internal scheduling and link adaptation while taking MRC scheduling information into account.

IX. Example Software-Defined Radio (SDR) Module.

[0089] The various examples of multiradio control implementation disclosed herein have been explained utilizing only hardware-based radio modules. A hardware-based radio module may be, for example, a radio module that relies primarily upon hardware components and static software elements (e.g., hard-coding or rewritable code that does not change during operation) for establishing communication. However, in accordance with at least one embodiment of the present invention, one or more transports may be supported in an apparatus by radio modules that rely more heavily upon a reconfigurable software-based element. The software-based element may be reconfigured at runtime, and therefore, these radio modules may be reconfigured to emulate various functionality that was traditionally only available through discrete modules.

[0090] In general, software-based elements may be implemented using known software tools (e.g., languages, compiled code, etc.) to establish instruction sets (e.g., programs, modules, etc.) that are executable by a processor. The functionality of a hardware-based component, or one or more elements of a hardware-based component, may be "defined" in terms of a set of instructions or conditions that exist within a program or module. Programs may be stored, for example, in a static or dynamic memory within an apparatus. When executed by a processor, these programs may access, manipulate, configure, etc. hardware elements in the apparatus in order to create the desired functionality. Examples of memory may include fixed or removable computer-readable media in a variety of formats (e.g., magnetic, optical, electronic, etc.).

[0091] An example implementation of a software-defined radio (SDR) module usable in accordance with various embodiments of the present invention is disclosed in FIG. **11**. Initially, a partial representation of an example WCD **100**, such, for example, as previously described herein with respect to various multiradio implementation examples, is shown at **1100**. In this example, WCD **100** may employ distinct hardware-based communication modules corresponding to, for example, long-range communications **310**, broadcast receivers **312** and short-range communications **320**. However, the configuration of multiradio systems is not specifically limited to the structure shown at T **100**.

[0092] For example, an alternative communication configuration for WCD **100** is shown at **1102**. In this example, the apparatus may incorporate at least one SDR module **1104** in lieu of one or more discrete hardware-based radio modules. While the flexibility of SDR module **1104** may provide an option of omitting some communication hardware from WCD **100**, this does not preclude the incorporation of one or more hardware-based modules **1106**. Implementations incorporating both SDR radio modules **1104** and hardware-based modules **1106** (represented as optional in FIG. **11** through the use of dotted lines) are possible. Combined hardware-based and software-based technology implementations may be employed, for example, in situations where specialized hardware is required to support particular transports, it is more economical to implement a hardware-based solution for a particular transport, an SDR module **1102** and a hardware-based module **1106** are used to support transports that often operate concurrently (e.g., transports that do not interfere with each other, and therefore, can operate at the same time), etc.

[0093] Now referring to FIG. **12**, a more detailed example of a SDR module is disclosed in accordance with at least one embodiment of the present invention. "Radio computers," which fall within the broader software-defined radio (SDR) concept, include platform architectures in which the different radio systems are loaded as software (e.g., as radio programs) and in which as single HW/SW platform can be used to implement different wireless connectivity features on shared processing resources. The radio programs may serve the purpose of cellular communication, local connectivity, broad-

cast, navigation, etc., and they can be integrated into legacy (existing) radio systems or form totally new radios. Further, "cognitive" radios include the ability to sense the surrounding environment and to share this information with peers. The sensed information may be utilized, for example, in distributed sensing strategies that allow apparatuses to make localized decisions in view of the entire environment when configuring communication.

[0094] FIG. **12** explains an example of a possible implementation of a SDR **1102** utilizing a previously disclosed embodiment of the present invention. SDR **1102** may interact with multiradio control features (e.g., MRC **600**) via MCS **700** and/or via common interfaces that may be components of master control system **640**. For example, SDR **1102** may include a multiradio access interface **1108** configured for the transmission and reception of delay-sensitive information via MCS **700**. In addition, flow controller **1112** in SDR **1102** may interact with programs in master control system **640** in order to regulate the flow of messages being sent from, and being received into, SDR **1102**. Multiradio access interface **1108** and flow controller **1112** may interact with various software components within SDR **1102** to emulate various hardware-based radio modules.

[0095] For example, information received via the aforementioned interfaces may be used to determine how SDR **1102** is to be configured. As part of this configuration, radio connection manager **1110** may receive data from multiradio access interface **1108** and/or flow controller **1112**. This data may include at least one of instruction information (e.g., rules or preferences regarding which transports to utilize in certain situations) and messages awaiting transmission. Radio connection manager **1110** may then interact with some or all of configuration manager **1114**, local multiradio control **1116** and resource manager **1118** in order to configure SDR **1102**. For instance, configuration manager **1114** may provide information regarding resources required for supporting a particular wireless transport, and resource manager **1118** may determine if these resources are available. If radio connection manager **1110** decides that it is possible to configure SDR **1102** to support the particular wireless transport (e.g., in view of the information provided by the other modules) then local multiradio control **1116** may implement the configuration. While an example of a usable configuration for SDR **1102** has been disclosed in FIG. **12**, other configurations are also possible in accordance with various embodiments of the present invention. For example, in an alternate configuration the functionality of MRC **600** and local multiradio controller **1116** may be implemented as a single functional element in WCD **100**.

[0096] In implementing a particular radio configuration, some or all of software modules **1110-1118** may interact with unified radio system interface **1120** in order to establish settings that will allow SDR **1102** to emulate a desired radio functionality. For example, unified radio systems may include both protocol information **1122** and device information **1124** that may be usable when replicating the functionality of hardware-based radios. The configured software resources may then access hardware resources (e.g., antennas **1126**) to send and/or receive wireless messages. For example, information in protocols **1122** and devices **1124** may be accessed and/or manipulated in order to emulate the functionality of a radio module that is configured to operate using a first transport (e.g., Bluetooth™ (BT)), and at the conclusion of activity may be reconfigured to support other communication in WCD **100** (e.g., WLAN).

[0097] In addition, it may be possible for SDR module **1108** to have cognitive features. Characteristics like apparatus status (e.g., process load, pending messages, power condition, etc.) and the environment proximate to an apparatus may be utilized to configure SDR module **1102**. For example, resources in SDR module **1102**, another radio module, or elsewhere in WCD **100** may be able to identify signals that could potentially interfere with apparatus communication. The identification of signal interference may be provided from sensor information (e.g., a sensor may detect a signal in proximity to an apparatus) and/or may be identified through information that is already "known" to WCD **100**. For example, MRC **600** may schedule communication in a multiradio system, and therefore, some or all of the schedule information may be provided to, or accessed by, SDR module **1102**. Regardless of the source, information on potential interference signals may be utilized when determining the optimum configuration for SDR module **1102**.

[0098] In accordance with various embodiments of the present invention, SDR module **1102** may interact with various program modules **1128** residing in at least one of MRC **600** or master control system **640**. Program modules **1128** may provide apparatus side coordination of communication when, for example, multiple SDR modules **1102** are active, or when SDR module **1102** is active at the same time as a hardware-based radio module. Example program modules that may exist within program modules **1128** include, but are not limited to, mobility policy manager **1130**, networking stack **1120** and administrator **1134**. In at least one scenario, mobility policy manager **1130** may define preferences and/or rules that control utilization of transports in an apparatus (e.g., WCD **100**). These preferences and/or rules may be based on various apparatus, application or user-defined characteristics. For example, the number of messages pending for each transport in networking stack **1132** may determine the next transport that will be implemented (e.g., a priority between the active transports), and therefore, the next configuration for SDR module **1102**. In making this determination, mobility policy manager **1130** may work with administrator **1134** to create an appropriate implementation schedule so that communication may continue within the guidelines set forth in the preferences and/or rules.

X. Example Configuration Methodology for SDR Modules

[0099] As generally set forth above, an apparatus may utilize a variety of characteristic information when determining how to configure a SDR module **1102**. However, characteristic information pertaining only to the apparatus itself may not address all issues that could potentially influence a transaction (e.g., including characteristics that may exist in one or more apparatuses with which communication is desired). In accordance with various embodiments of the present invention, conditions that exist in or around other apparatuses participating in wireless communication may, in some instances, alter the determination process with respect to configuring SDR module **1102**.

[0100] FIG. **13** discloses an example including two apparatuses. While FIG. **13** discloses a scenario where a first apparatus desires to establish wireless communication (e.g., a wireless link) with a second apparatus, this example is presented herein only for the sake of explanation. As such, the present invention is not limited only to the disclosed interac-

tion (e.g., may involve more than two apparatuses) or any particular wired or wireless transports. Further, while various implementations of the present invention have been described herein as integrated with a multiradio control system, various embodiments of the present invention may also operate in standalone situations (e.g., configurations where no multiradio control has been established).

[0101] In this non-limiting example, apparatus A **1300** has a requirement to interact with apparatus B **1302** in FIG. **13**. Such a requirement to establish communication may be initiated by, for example, applications and/or utilities executing on apparatus A **1300**, user interaction with apparatus A **1300**, etc. In response to this requirement, apparatus A **1300** may send a wireless inquiry to apparatus B **1302**. The wireless inquiry may be sent, for example, utilizing a channel (e.g., an initialization channel) that is known to (e.g., predefined or predetermined) each apparatus. Apparatus B **1302** may acknowledge receipt of the inquiry from apparatus A **1300**, and may in turn respond with one or more messages accepting the invitation to communicate and containing remote characteristics. Remote characteristics comprise information related to the apparatus with which communication is desired (e.g., apparatus B **1302**), and may include information regarding apparatus status and/or environmental conditions proximate to the apparatus. For instance, apparatus status information may include apparatus communication capabilities and/or preferences, current apparatus power condition, current apparatus operational condition, current communication activity including transports active in the apparatus and a number of messages pending for each active transport, etc. Information pertaining to environmental conditions may include signals sensed in proximity to the apparatus that may potentially cause interference, communication scheduled in the apparatus, the identification of other apparatuses operating in proximity, etc. Some or all of this information may be provided in response to the inquiry of apparatus A **1300**.

[0102] Apparatus A **1300** may also determine characteristics pertaining to itself, which are designated local characteristics in FIG. **13**. Local characteristics may include all of the information discussed above with respect to remote characteristics, but from the perspective of the initiating apparatus. While local characteristics are formulated after remote characteristics in the example of FIG. **13**, the determination of local characteristics is not limited to this temporal organization. In particular, the determination of local characteristics may occur before, during or after the receipt of remote characteristics from apparatus B **1302**. Once Apparatus A **1300** has both the remote and local characteristic information, a configuration for SDR module **1102** may be formulated. The configuration may define a transport, or a list of transports (e.g., in priority order), for use in communication with apparatus B **1302**, channel selection for each transport (e.g., hopping patterns), error correction, Quality of Service (QoS) requirements, operational schemes (e.g., power saving, high speed, etc.), radio module priority (for conflict resolution), etc.

[0103] After formulation of the configuration is complete, the configuration may be sent to apparatus B **1302**. In various embodiments of the present invention, the configuration may be sent to apparatus B **1302** on the initialization channel. Apparatus A **1300** and apparatus B **1302** may then set the configuration. Setting a configuration may include, for example, programming one or more SDR modules **1102** in each apparatus for establishing communication in accordance with the configuration. After the configuration is set in apparatus A **1300** and apparatus B **1302**, either apparatus may initiate communication (e.g., establish a wireless link between apparatuses).

[0104] It is important to note that, in various embodiments of the present invention, the communication may continue in accordance with the existing configuration until an event occurs that would necessitate a new configuration. Examples of events that may necessitate a new configuration may include, but are not limited to, fulfillment of the communication requirement, a loss of wireless connection between the apparatuses, sensed interference in proximity to either apparatus, a higher priority communication in one or both of the apparatuses that could conflict with current communication, a status change in either apparatus (e.g., power depletion), etc.

[0105] A flowchart of an example configuration process in accordance with at least one embodiment of the present invention is disclosed in FIG. **14**A. The process may begin in step **1400** with the realization of a communication requirement in an apparatus. A determination may then be made in step **1402** as to whether any other apparatuses that can fulfill the requirement are within communication range of the apparatus. If no other apparatuses are discovered, then in step **1404** the process may enter a failure mode, wherein the failure mode may include one or more activities executed when the requirement cannot be fulfilled. Activities may include, for example, a visible, audible or tactile notification of communication failure to an apparatus user. The process may then return to step **1400** to await subsequent requirements for communication.

[0106] If at least one other apparatus that can fulfill the communication requirement is detected within range of the apparatus, then in step **1406** a connection request may be sent to the other apparatus. Connection requests may be sent on a channel known to both apparatuses (e.g., an initialization channel). If no response is received from the other apparatus in step **1408**, then in step **1410** a determination may be made as to whether a retry condition has been exceeded. Examples of retry conditions include a duration of time since the original connection attempt, a number of retries, etc. Connection requests may continue in step **1406** until the retry condition is exceeded (step **1410**), at which point the failure mode described in step **1404** may be triggered.

[0107] If the other apparatus acknowledges the connection request, then in step **1412** an inquiry may be sent to the other apparatus. The inquiry may request, or trigger the provision of, remote characteristic information from the other apparatus. If remote characteristic information is not received in step **1414**, then a determination may be made in step **1408** as to whether the wireless connection was lost. If a response is received in step **1414** (e.g., including remote characteristics pertaining to the other apparatus), then in step **1416** local characteristics related to the initiating apparatus may be determined. As stated above, steps **1414** and **1416** do not have to occur in the order depicted in FIG. **14**A, as the determination of local characteristics may occur in the initiating apparatus before, during or after the receipt of the remote characteristics.

[0108] The initiating apparatus may then formulate a configuration based on at least the remote characteristic information and the local characteristic information in step **1418**. The completed configuration may, for example, allow an apparatus to program one or more SDR modules **1102** for wireless communication. The configuration may then be sent to the

other apparatus in step **1420**. In accordance with at least one embodiment of the present invention, the configuration may be sent from the initiating apparatus to the other apparatus on the initialization channel. For example, the configuration may be set in the initiating apparatus (step **1422**) by ceasing interaction with the other apparatus on the initialization channel, and then programming one or more SDR modules **1102** to communicate in accordance with the configuration.

[0109] In step **1424** the connection defined by the configuration may be established. The connection may be, for example, a wireless link on a channel different than the initialization channel, or even via a totally different wireless transport. If a connection fails to be established, as determined in step **1426**, then the process may return to step **1402** to determine if the other apparatus can still be detected. For example, the other apparatus originally discovered in step **1402** may have moved outside of the range of the wireless transport configured in step **1422** by the time a connection is attempted in step **1424**. If the connection (e.g., wireless link) defined by the configuration is established in step **1426**, the connection may continue in step **1428** until an event occurs that would necessitate the formulation of a new configuration. For example, completion of the current communication requirement, an interference signal sensed in proximity to one or both apparatuses, a higher priority communication in one of the apparatuses, etc. may be considered events that would cause the process to return to step **1400** in preparation for the formulation of a new configuration based on, for example, a new communication requirement.

[0110] A flowchart depicting an example process for establishing a wireless connection from the perspective of an apparatus that is receiving the initial inquiry, in accordance with at least one embodiment of the present invention, is now disclosed with respect to FIG. **14**B. Initially, a wireless communication may be received by an apparatus (e.g., apparatus B **1302**) in step **1450**. A determination may then be made in step **1452** as to whether the communication comprises an inquiry requesting characteristic information from the receiving apparatus. If no characteristic information is requested, then in step **1454** a link may be negotiated in accordance with standard communication methodology (e.g., based on the protocol for the wireless transport that is currently being utilized), which may be followed by link establishment in step **1456**.

[0111] If in step **1452** a determination is made that a characteristic information inquiry is present in the received communication, then the receiving apparatus may formulate characteristic information concerning itself (e.g., in accordance with the various examples presented herein). While characteristic information formulation is shown as step **1458** in the FIG. **14**B process, the formulation of characteristic information is not strictly limited to this instance. The formulation of characteristic information may also occur before receiving the inquiry, periodically, etc. A response may then be sent to the inquiring apparatus in step **1460**, the response comprising at least the characteristic information. The receiving device may then enter a waiting loop in steps **1462** and **1464**. For example, the receiving apparatus may wait for a configuration from the initiating apparatus until a condition is exceeded (e.g., until a duration from the time that the characteristic information response was sent, until a number of retry transmissions has been exceeded, etc.). In the example of a retry limit condition, the receiving apparatus may attempt to resend the characteristic information response in order to ensure that this information was successfully received. If no configuration is received, and the condition is exceeded in step **1464**, then in step **1466** an error condition may commence. Examples of activities that may be executed in an error condition may include, for example, displaying notification to a user that no configuration was received, reformulating and retransmitting the characteristic information to the initiating apparatus, verification of the presence of the initiating apparatus, etc. The process may then restart in step **1450** with the receiving apparatus awaiting further communication.

[0112] If in step **1462** a communication configuration is received from the initiating apparatus, then in step **1468** the received communication configuration may be implemented in the receiving apparatus. Implementation of the configuration in the receiving apparatus may include, for example, the configuration of a hardware-based radio module (or alternatively of a SDR module enabled to emulate hardware-based radio functionality) to communicate utilizing particular wireless transports, particular channels or certain features/modes (e.g., error checking, power saving, etc.). A link in accordance with the received communication configuration may then be established in step **1456**. After the communication transaction is completed, the process may again reinitiate in step **1450**, wherein the receiving apparatus awaits further communication.

[0113] Accordingly, it will be apparent to persons skilled in the relevant art that various changes in form a and detail can be made therein without departing from the spirit and scope of the invention. The breadth and scope of the present invention should not be limited by any of the above-described example embodiments, but should be defined only in accordance with the following claims and their equivalents.

What is claimed:

1. A method, comprising:

initiating an inquiry from an apparatus to at least one other apparatus;

receiving remote characteristic information into the apparatus, the remote characteristic information corresponding to the at least one other apparatus;

determining local characteristic information in the apparatus;

formulating a configuration in the apparatus, the configuration being based on the remote characteristic information and the local characteristic information;

sending the configuration from the apparatus to the at least one other apparatus;

implementing the configuration in the apparatus; and

establishing communication between the apparatus and at least one other apparatus in accordance with the configuration.

2. The method of claim **1**, wherein the inquiry is conducted via an initialization channel that is established in both the apparatus and the at least one other apparatus.

3. The method of claim **1**, wherein remote characteristic information comprises at least one of supported communication transport configuration information for the at least one other apparatus, power status information for the at least one other apparatus, processing load information for the at least one other apparatus, communication load information for the at least one other apparatus, proximate interference information for the at least one other apparatus, and user preferences configured in the at least one other apparatus.

4. The method of claim **1**, wherein local characteristic information comprises at least one of supported communica-

tion transport configuration information for the apparatus, power status information for the apparatus, processing load information for the apparatus, communication load information for the apparatus, proximate interference information for the apparatus, and user preferences configured in the apparatus.

5. The method of claim **1**, wherein the configuration comprises at least information that is required by the apparatus and the at least one other apparatus in order to establish communication via a wireless transport, the wireless transport being determined based on the remote characteristic information and the local characteristic information.

6. The method of claim **1**, wherein the configuration is sent via an initialization channel that is established in both the apparatus and the at least one other apparatus, the at least one other apparatus implementing the configuration that was sent from the apparatus.

7. The method of claim **1**, wherein implementing the configuration comprises discontinuing communication occurring on an initialization channel and resetting resources in the apparatus and the at least one other apparatus in accordance with the configuration.

8. The method of claim **1**, wherein the communication between the apparatus and the at least one other apparatus is established via a wireless transport that is different from the wireless transport utilized to transmit the inquiry from the apparatus.

9. A computer program product comprising computer executable program code recorded on a computer readable medium, the computer executable program code comprising:

computer program code configured to initiate an inquiry from an apparatus to at least one other apparatus;

computer program code configured to receive remote characteristic information into the apparatus, the remote characteristic information corresponding to the at least one other apparatus;

computer program code configured to determine local characteristic information in the apparatus;

computer program code configured to formulate a configuration in the apparatus, the configuration being based on the remote characteristic information and the local characteristic information;

computer program code configured to send the configuration from the apparatus to the at least one other apparatus;

computer program code configured to implement the configuration in the apparatus; and

computer program code configured to establish communication between the apparatus and at least one other apparatus in accordance with the configuration.

10. The computer program product of claim **9**, wherein the inquiry is conducted via an initialization channel that is established in both the apparatus and the at least one other apparatus.

11. The computer program product of claim **9**, wherein remote characteristic information comprises at least one of supported communication transport configuration information for the at least one other apparatus, power status information for the at least one other apparatus, processing load information for the at least one other apparatus, communication load information for the at least one other apparatus, proximate interference information for the at least one other apparatus, and user preferences configured in the at least one other apparatus.

12. The computer program product of claim **9**, wherein local characteristic information comprises at least one of supported communication transport configuration information for the apparatus, power status information for the apparatus, processing load information for the apparatus, communication load information for the apparatus, proximate interference information for the apparatus, and user preferences configured in the apparatus.

13. The computer program product of claim **9**, wherein the configuration comprises at least information that is required by the apparatus and the at least one other apparatus in order to establish communication via a wireless transport, the wireless transport being determined based on the remote characteristic information and the local characteristic information.

14. The computer program product of claim **9**, wherein the configuration is sent via an initialization channel that is established in both the apparatus and the at least one other apparatus, the at least one other apparatus implementing the configuration that was sent from the apparatus.

15. The computer program product of claim **9**, wherein implementing the configuration comprises discontinuing communication occurring on an initialization channel and resetting resources in the apparatus and the at least one other apparatus in accordance with the configuration.

16. The computer program product of claim **9**, wherein the communication between the apparatus and the at least one other apparatus is established via a wireless transport that is different from the wireless transport utilized to transmit the inquiry from the apparatus.

17. An apparatus, comprising:

at least one software-defined radio module; and

a processor, the processor being configured to:

initiate an inquiry from to at least one other apparatus;

receive remote characteristic information, the remote characteristic information corresponding to the at least one other apparatus;

determine local characteristic information;

formulate a configuration, the configuration being based on the remote characteristic information and the local characteristic information;

send the configuration to the at least one other apparatus;

implement the configuration; and

establish communication with at least one other apparatus in accordance with the configuration.

18. The apparatus of claim **17**, wherein the inquiry is conducted via an initialization channel that is established in both the apparatus and the at least one other apparatus.

19. The apparatus of claim **17**, wherein remote characteristic information comprises at least one of supported communication transport configuration information for the at least one other apparatus, power status information for the at least one other apparatus, processing load information for the at least one other apparatus, communication load information for the at least one other apparatus, proximate interference information for the at least one other apparatus, and user preferences configured in the at least one other apparatus.

20. The apparatus of claim **17**, wherein local characteristic information comprises at least one of supported communication transport configuration information for the apparatus, power status information for the apparatus, processing load information for the apparatus, communication load information for the apparatus, proximate interference information for the apparatus, and user preferences configured in the apparatus.

21. The apparatus of claim **17**, wherein the configuration comprises at least information that is required by the apparatus and the at least one other apparatus in order to establish communication via a wireless transport, the wireless transport being determined based on the remote characteristic information and the local characteristic information.

22. The apparatus of claim **17**, wherein the configuration is sent via an initialization channel that is established in both the apparatus and the at least one other apparatus, the at least one other apparatus implementing the configuration that was sent from the apparatus.

23. The apparatus of claim **17**, wherein implementing the configuration comprises discontinuing communication occurring on an initialization channel and resetting resources in the apparatus and the at least one other apparatus in accordance with the configuration.

24. The apparatus of claim **17**, wherein the communication between the apparatus and the at least one other apparatus is established via a wireless transport that is different from the wireless transport utilized to transmit the inquiry from the apparatus.

25. An apparatus, comprising:

means for initiating an inquiry from the apparatus to at least one other apparatus;

means for receiving remote characteristic information into the apparatus, the remote characteristic information corresponding to the at least one other apparatus;

means for determining local characteristic information in the apparatus;

means for formulating a configuration in the apparatus, the configuration being based on the remote characteristic information and the local characteristic information;

means for sending the configuration from the apparatus to the at least one other apparatus;

means for implementing the configuration in the apparatus; and

means for establishing communication between the apparatus and at least one other apparatus in accordance with the configuration.

26. A method, comprising:

receiving wireless communication in an apparatus;

if the wireless communication includes an inquiry requesting characteristic information, determining characteristic information corresponding to the apparatus;

responding to the inquiry, the response comprising the characteristic information;

receiving further wireless communication in the apparatus, the further wireless communication including a configuration;

implementing the configuration in the apparatus; and

establishing communication in accordance with the configuration.

27. A computer program product comprising computer executable program code recorded on a computer readable medium, the computer executable program code comprising:

computer program code configured to receive wireless communication in an apparatus;

computer program code configured to, if the wireless communication includes an inquiry requesting characteristic information, determine characteristic information corresponding to the apparatus;

computer program code configured to respond to the inquiry, the response comprising the characteristic information;

computer program code configured to receive further wireless communication in the apparatus, the further wireless communication including a configuration;

computer program code configured to implement the configuration in the apparatus; and

computer program code configured to establish communication in accordance with the configuration.

28. An apparatus, comprising:

at least one radio module; and

a processor, the processor being configured to:

receive wireless communication in an apparatus;

if the wireless communication includes an inquiry requesting characteristic information, determine characteristic information corresponding to the apparatus;

respond to the inquiry, the response comprising the characteristic information;

receive further wireless communication in the apparatus, the further wireless communication including a configuration;

implement the configuration in the apparatus; and

establish communication in accordance with the configuration.

29. An apparatus, comprising:

means for receiving wireless communication in an apparatus;

means for, if the wireless communication includes an inquiry requesting characteristic information, determining characteristic information corresponding to the apparatus;

means for responding to the inquiry, the response comprising the characteristic information;

means for receiving further wireless communication in the apparatus, the further wireless communication including a configuration;

means for implementing the configuration in the apparatus; and

means for establishing communication in accordance with the configuration.

* * * * *