Blackfin® Embedded Processor

ADSP-BF531/ADSP-BF532

FEATURES

Up to 400 MHz high performance Blackfin processor
- **Two 16-bit MACs, two 40-bit ALUs, four 8-bit video ALUs, 40-bit shifter**
- **RISC-like register and instruction model for ease of programming and compiler-friendly support**
- **Advanced debug, trace, and performance monitoring**

0.8 V to 1.2 V core V_{DD} with on-chip voltage regulation
1.8 V, 2.5 V, and 3.3 V compliant I/O
160-ball mini-BGA, 169-ball lead free PBGA, and 176-lead LQFP packages

MEMORY

Up to 84K bytes of on-chip memory:
- **16K bytes of instruction SRAM/Cache**
- **32K bytes of instruction SRAM**
- **32K bytes of data SRAM/Cache**
- **4K bytes of scratchpad SRAM**

Two dual-channel memory DMA controllers
Memory management unit providing memory protection
External memory controller with glueless support for SDRAM, SRAM, FLASH, and ROM
Flexible memory booting options from SPI® and external memory

PERIPHERALS

Parallel peripheral interface PPI/GPIO, supporting ITU-R 656 video data formats
Two dual-channel, full duplex synchronous serial ports, supporting eight stereo I^2S channels
12-channel DMA controller
SPI-compatible port
Three timer/counters with PWM support
UART with support for IrDA®
Event handler
Real-time clock
Watchdog timer
Debug/JTAG interface
On-chip PLL capable of 0.5× to 64× frequency multiplication
Core timer

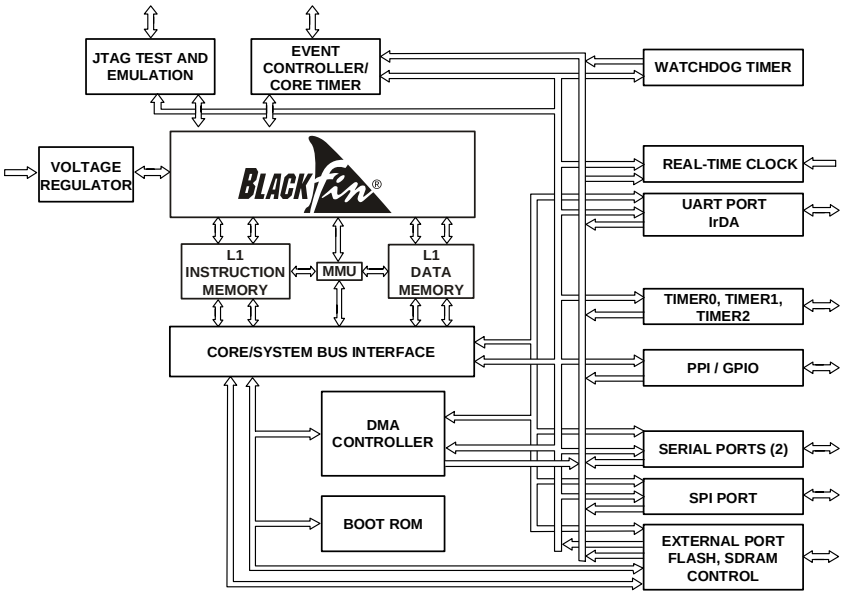

Figure 1. Functional Block Diagram

Blackfin and the Blackfin logo are registered trademarks of Analog Devices, Inc.

Rev. D

Information furnished by Analog Devices is believed to be accurate and reliable. However, no responsibility is assumed by Analog Devices for its use, nor for any infringements of patents or other rights of third parties that may result from its use. Specifications subject to change without notice. No license is granted by implication or otherwise under any patent or patent rights of Analog Devices. Trademarks and registered trademarks are the property of their respective owners.

One Technology Way, P.O. Box 9106, Norwood, MA 02062-9106 U.S.A.
Tel: 781.329.4700 **www.analog.com**
Fax: 781.461.3113 **© 2006 Analog Devices, Inc. All rights reserved.**

TransCore LP
Exhibit 1007

TABLE OF CONTENTS

General Description 4
- Portable Low Power Architecture 4
- System Integration 4
- ADSP-BF531/ADSP-BF532 Processor Peripherals 4
- Blackfin Processor Core 4
- Memory Architecture 5
- DMA Controllers 8
- Real-Time Clock 9
- Watchdog Timer 9
- Timers 10
- Serial Ports (SPORTs) 10
- Serial Peripheral Interface (SPI) Port 10
- UART Port 10
- Programmable Flags (PFx) 11
- Parallel Peripheral Interface 11
- Dynamic Power Management 12
- Voltage Regulation 13
- Clock Signals 13
- Booting Modes 14
- Instruction Set Description 14
- Development Tools 15
- Designing an Emulator-Compatible Processor Board .. 16
- Related Documents 16

Pin Descriptions 17

Specifications 20
- Operating Conditions 20
- Electrical Characteristics 21
- Absolute Maximum Ratings 22
- Package Information 22
- ESD Sensitivity 22
- Timing Specifications 23
  - Clock and Reset Timing 24
  - Asynchronous Memory Read Cycle Timing 25
  - Asynchronous Memory Write Cycle Timing 26
  - SDRAM Interface Timing 27
  - External Port Bus Request and Grant Cycle Timing .. 28
  - Parallel Peripheral Interface Timing 29
  - Serial Ports 32
  - Serial Peripheral Interface (SPI) Port —Master Timing 37
  - Serial Peripheral Interface (SPI) Port —Slave Timing 38
  - Universal Asynchronous Receiver-Transmitter (UART) Port—Receive and Transmit Timing 39
  - Programmable Flags Cycle Timing 40
  - Timer Cycle Timing 41
  - JTAG Test and Emulation Port Timing 42
- Output Drive Currents 43
- Power Dissipation 45
- Test Conditions 45
- Environmental Conditions 48

160-Ball BGA Pinout 50

169-Ball PBGA Pinout 53

176-Lead LQFP Pinout 56

Outline Dimensions 58

Ordering Guide 60

REVISION HISTORY

8/06—Revision D: Changed from Rev. C to Rev. D

Added 1.8 V I/O to Features 1

Changed Text in Figure External Components for RTC 9

Added Text to Serial Ports (SPORTs) 10

Changed Font in Formula in Power Savings 12

Minor Edit to Figure Voltage Regulator Circuit 13

Complete Rewrite of Operating Conditions 20

Complete Rewrite of Electrical Characteristics 21

Added 1.8 V and 125°C Specifications
to Multiple Tables of Timing Specifications 23

Edit to Asynchronous Memory Read Cycle Timing 25

Edit to Asynchronous Memory Write Cycle Timing 26

Changed Data in SDRAM Interface Timing 27

Changed Data in Parallel Peripheral Interface Timing 29

Changed Data in Serial Ports 32

Deleted References to Temperature in Figures
in Output Drive Currents 43

Added 1.8 V Data to Output Drive Currents 43

Moved Data to Operating Conditions
and Rewrote Power Dissipation 45

Deleted References to Temperature in Figures
in Test Conditions 45

Added 1.8 V References in Test Conditions 45

Added 1.8 V Characterization Data Capacitive Loading ... 45

Changed Thermal Characteristics for BC-160 Package 49

Added Models to Ordering Guide 60

GENERAL DESCRIPTION

The ADSP-BF531/ADSP-BF532 processors are members of the Blackfin family of products, incorporating the Analog Devices/Intel Micro Signal Architecture (MSA). Blackfin processors combine a dual-MAC state-of-the-art signal processing engine, the advantages of a clean, orthogonal RISC-like microprocessor instruction set, and single instruction, multiple data (SIMD) multimedia capabilities into a single instruction set architecture.

The Blackfin processors are completely code and pin compatible, differing only with respect to their performance and on-chip memory. Specific performance and memory configurations are shown in Table 1.

Table 1. Processor Comparison

	ADSP-BF531	ADSP-BF532
Maximum Performance	400 MHz 800 MMACs	400 MHz 800 MMACs
Instruction SRAM/Cache	16K bytes	16K bytes
Instruction SRAM	16K bytes	32K bytes
Data SRAM/Cache	16K bytes	32K bytes
Scratchpad	4K bytes	4K bytes

By integrating a rich set of industry-leading system peripherals and memory, Blackfin processors are the platform of choice for next generation applications that require RISC-like programmability, multimedia support, and leading-edge signal processing in one integrated package.

PORTABLE LOW POWER ARCHITECTURE

Blackfin processors provide world-class power management and performance. Blackfin processors are designed in a low power and low voltage design methodology and feature dynamic power management—the ability to vary both the voltage and frequency of operation to significantly lower overall power consumption. Varying the voltage and frequency can result in a substantial reduction in power consumption, compared with just varying the frequency of operation. This translates into longer battery life for portable appliances.

SYSTEM INTEGRATION

The ADSP-BF531/ADSP-BF532 processors are highly integrated system-on-a-chip solutions for the next generation of digital communication and consumer multimedia applications. By combining industry-standard interfaces with a high performance signal processing core, users can develop cost-effective solutions quickly without the need for costly external components. The system peripherals include a UART port, an SPI port, two serial ports (SPORTs), four general-purpose timers (three with PWM capability), a real-time clock, a watchdog timer, and a parallel peripheral interface.

ADSP-BF531/ADSP-BF532 PROCESSOR PERIPHERALS

The ADSP-BF531/ADSP-BF532 processor contains a rich set of peripherals connected to the core via several high bandwidth buses, providing flexibility in system configuration as well as excellent overall system performance (see the functional block diagram in Figure 1 on Page 1). The general-purpose peripherals include functions such as UART, timers with PWM (pulse-width modulation) and pulse measurement capability, general-purpose flag I/O pins, a real-time clock, and a watchdog timer. This set of functions satisfies a wide variety of typical system support needs and is augmented by the system expansion capabilities of the part. In addition to these general-purpose peripherals, the ADSP-BF531/ADSP-BF532 processor contains high speed serial and parallel ports for interfacing to a variety of audio, video, and modem codec functions; an interrupt controller for flexible management of interrupts from the on-chip peripherals or external sources; and power management control functions to tailor the performance and power characteristics of the processor and system to many application scenarios.

All of the peripherals, except for general-purpose I/O, real-time clock, and timers, are supported by a flexible DMA structure. There is also a separate memory DMA channel dedicated to data transfers between the processor's various memory spaces, including external SDRAM and asynchronous memory. Multiple on-chip buses running at up to 133 MHz provide enough bandwidth to keep the processor core running along with activity on all of the on-chip and external peripherals.

The ADSP-BF531/ADSP-BF532 processor includes an on-chip voltage regulator in support of the ADSP-BF531/ADSP-BF532 processor dynamic power management capability. The voltage regulator provides a range of core voltage levels from a single 2.25 V to 3.6 V input. The voltage regulator can be bypassed at the user's discretion.

BLACKFIN PROCESSOR CORE

As shown in Figure 2 on Page 6, the Blackfin processor core contains two 16-bit multipliers, two 40-bit accumulators, two 40-bit ALUs, four video ALUs, and a 40-bit shifter. The computation units process 8-bit, 16-bit, or 32-bit data from the register file.

The compute register file contains eight 32-bit registers. When performing compute operations on 16-bit operand data, the register file operates as 16 independent 16-bit registers. All operands for compute operations come from the multiported register file and instruction constant fields.

Each MAC can perform a 16-bit by 16-bit multiply in each cycle, accumulating the results into the 40-bit accumulators. Signed and unsigned formats, rounding, and saturation are supported.

The ALUs perform a traditional set of arithmetic and logical operations on 16-bit or 32-bit data. In addition, many special instructions are included to accelerate various signal processing tasks. These include bit operations such as field extract and

population count, modulo 2^{32} multiply, divide primitives, saturation and rounding, and sign/exponent detection. The set of video instructions includes byte alignment and packing operations, 16-bit and 8-bit adds with clipping, 8-bit average operations, and 8-bit subtract/absolute value/accumulate (SAA) operations. Also provided are the compare/select and vector search instructions.

For certain instructions, two 16-bit ALU operations can be performed simultaneously on register pairs (a 16-bit high half and 16-bit low half of a compute register). By also using the second ALU, quad 16-bit operations are possible.

The 40-bit shifter can perform shifts and rotates and is used to support normalization, field extract, and field deposit instructions.

The program sequencer controls the flow of instruction execution, including instruction alignment and decoding. For program flow control, the sequencer supports PC relative and indirect conditional jumps (with static branch prediction), and subroutine calls. Hardware is provided to support zero-overhead looping. The architecture is fully interlocked, meaning that the programmer need not manage the pipeline when executing instructions with data dependencies.

The address arithmetic unit provides two addresses for simultaneous dual fetches from memory. It contains a multiported register file consisting of four sets of 32-bit index, modify, length, and base registers (for circular buffering), and eight additional 32-bit pointer registers (for C-style indexed stack manipulation).

Blackfin processors support a modified Harvard architecture in combination with a hierarchical memory structure. Level 1 (L1) memories are those that typically operate at the full processor speed with little or no latency. At the L1 level, the instruction memory holds instructions only. The two data memories hold data, and a dedicated scratchpad data memory stores stack and local variable information.

In addition, multiple L1 memory blocks are provided, offering a configurable mix of SRAM and cache. The memory management unit (MMU) provides memory protection for individual tasks that may be operating on the core and can protect system registers from unintended access.

The architecture provides three modes of operation: user mode, supervisor mode, and emulation mode. User mode has restricted access to certain system resources, thus providing a protected software environment, while supervisor mode has unrestricted access to the system and core resources.

The Blackfin processor instruction set has been optimized so that 16-bit opcodes represent the most frequently used instructions, resulting in excellent compiled code density. Complex DSP instructions are encoded into 32-bit opcodes, representing fully featured multifunction instructions. Blackfin processors support a limited multi-issue capability, where a 32-bit instruction can be issued in parallel with two 16-bit instructions, allowing the programmer to use many of the core resources in a single instruction cycle.

The Blackfin processor assembly language uses an algebraic syntax for ease of coding and readability. The architecture has been optimized for use in conjunction with the C/C++ compiler, resulting in fast and efficient software implementations.

MEMORY ARCHITECTURE

The ADSP-BF531/ADSP-BF532 processor views memory as a single unified 4G byte address space, using 32-bit addresses. All resources, including internal memory, external memory, and I/O control registers, occupy separate sections of this common address space. The memory portions of this address space are arranged in a hierarchical structure to provide a good cost/performance balance of some very fast, low latency on-chip memory as cache or SRAM, and larger, lower cost and performance off-chip memory systems. See Figure 3 on Page 7, and Figure 4 on Page 7.

The L1 memory system is the primary highest performance memory available to the Blackfin processor. The off-chip memory system, accessed through the external bus interface unit (EBIU), provides expansion with SDRAM, flash memory, and SRAM, optionally accessing up to 132M bytes of physical memory.

The memory DMA controller provides high bandwidth data-movement capability. It can perform block transfers of code or data between the internal memory and the external memory spaces.

Internal (On-Chip) Memory

The ADSP-BF531/ADSP-BF532 processor has three blocks of on-chip memory providing high bandwidth access to the core.

The first is the L1 instruction memory, consisting of up to 48K bytes SRAM, of which 16K bytes can be configured as a four way set-associative cache. This memory is accessed at full processor speed.

The second on-chip memory block is the L1 data memory, consisting of one bank of 32K bytes. The memory bank is configurable, offering both cache and SRAM functionality. This memory block is accessed at full processor speed.

The third memory block is a 4K byte scratchpad SRAM which runs at the same speed as the L1 memories, but is only accessible as data SRAM and cannot be configured as cache memory.

External (Off-Chip) Memory

The external bus interface can be used with both asynchronous devices such as SRAM, FLASH, EEPROM, ROM, and I/O devices, and synchronous devices such as SDRAMs. The bus width is always 16 bits. A1 is the least significant address of a 16-bit word. 8-bit peripherals should be addressed as if they were 16-bit devices, where only the lower eight bits of data should be used.

The PC133-compliant SDRAM controller can be programmed to interface to up to 128M bytes of SDRAM. The SDRAM controller allows one row to be open for each internal SDRAM bank, for up to four internal SDRAM banks, improving overall system performance.

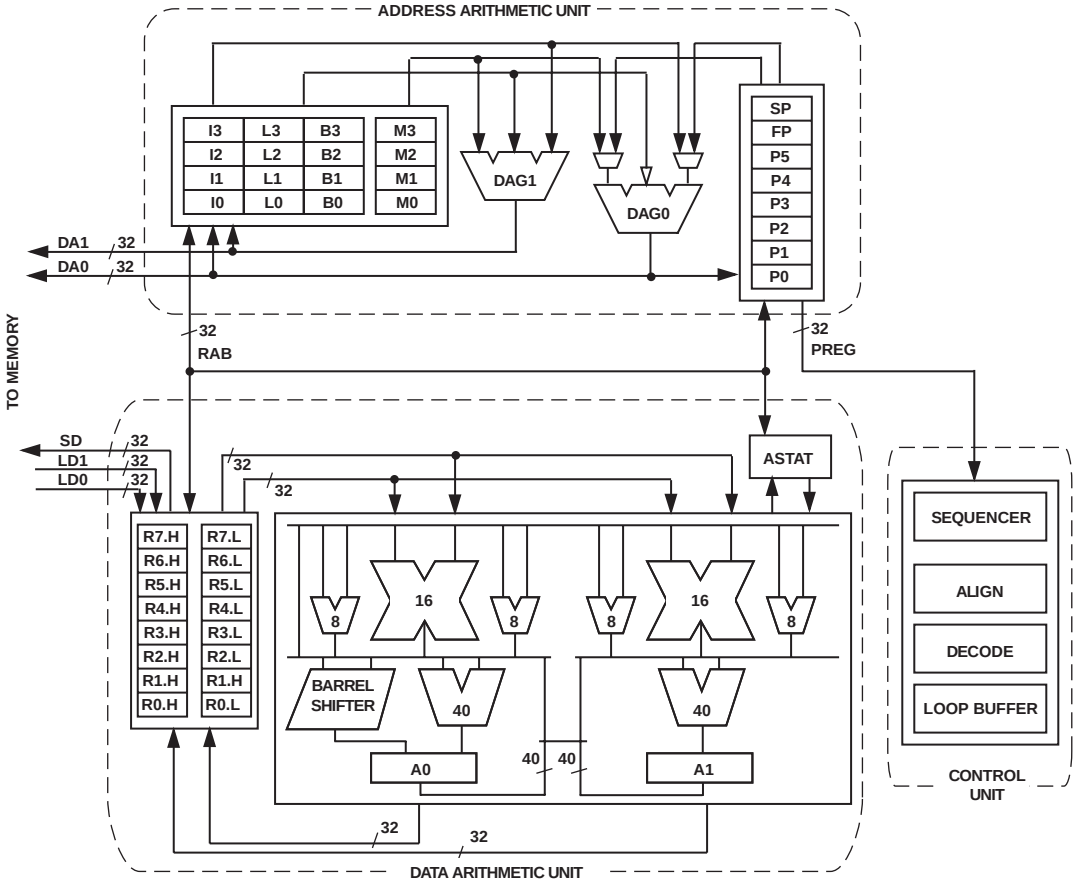

Figure 2. Blackfin Processor Core

The asynchronous memory controller can be programmed to control up to four banks of devices with very flexible timing parameters for a wide variety of devices. Each bank occupies a 1M byte segment regardless of the size of the devices used, so that these banks will only be contiguous if each is fully populated with 1M byte of memory.

I/O Memory Space

Blackfin processors do not define a separate I/O space. All resources are mapped through the flat 32-bit address space. On-chip I/O devices have their control registers mapped into memory mapped registers (MMRs) at addresses near the top of the 4G byte address space. These are separated into two smaller blocks, one of which contains the control MMRs for all core functions, and the other of which contains the registers needed for setup and control of the on-chip peripherals outside of the core. The MMRs are accessible only in supervisor mode and appear as reserved space to on-chip peripherals.

Booting

The ADSP-BF531/ADSP-BF532 processor contains a small boot kernel, which configures the appropriate peripheral for booting. If the ADSP-BF531/ADSP-BF532 processor is configured to boot from boot ROM memory space, the processor starts executing from the on-chip boot ROM. For more information, see Booting Modes on Page 14.

Event Handling

The event controller on the ADSP-BF531/ADSP-BF532 processor handles all asynchronous and synchronous events to the processor. The ADSP-BF531/ADSP-BF532 processor provides event handling that supports both nesting and prioritization. Nesting allows multiple event service routines to be active simultaneously. Prioritization ensures that servicing of a higher priority event takes precedence over servicing of a lower priority event. The controller provides support for five different types of events:

- Emulation – An emulation event causes the processor to enter emulation mode, allowing command and control of the processor via the JTAG interface.
- Reset – This event resets the processor.
- Nonmaskable Interrupt (NMI) – The NMI event can be generated by the software watchdog timer or by the NMI input signal to the processor. The NMI event is frequently used as a power-down indicator to initiate an orderly shutdown of the system.

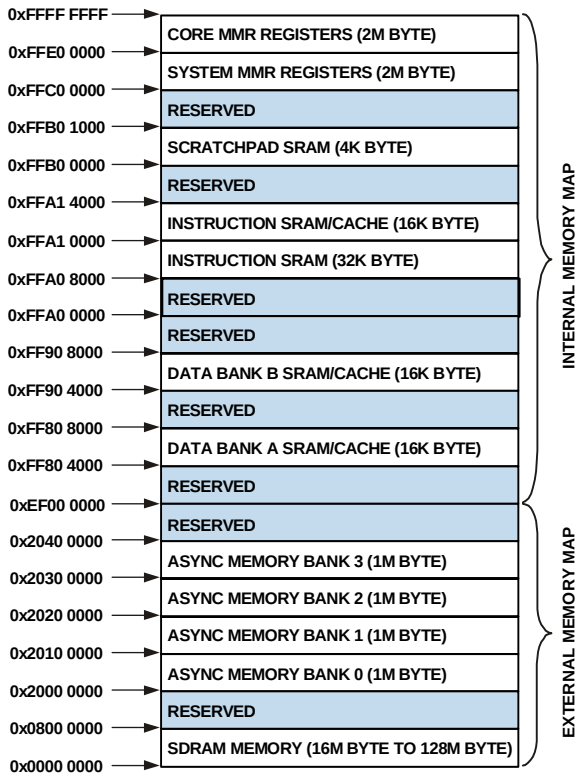

Figure 3. ADSP-BF532 Internal/External Memory Map

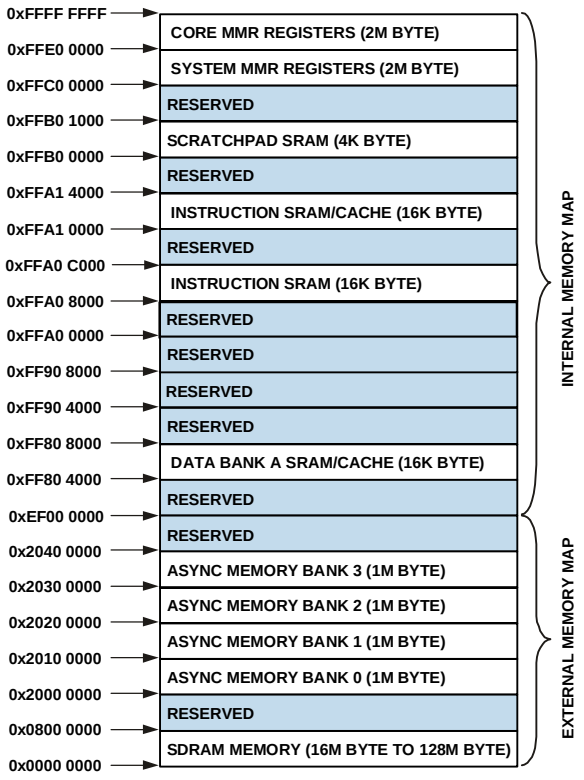

Figure 4. ADSP-BF531 Internal/External Memory Map

- Exceptions – Events that occur synchronously to program flow (i.e., the exception will be taken before the instruction is allowed to complete). Conditions such as data alignment violations and undefined instructions cause exceptions.
- Interrupts – Events that occur asynchronously to program flow. They are caused by input pins, timers, and other peripherals, as well as by an explicit software instruction.

Each event type has an associated register to hold the return address and an associated return-from-event instruction. When an event is triggered, the state of the processor is saved on the supervisor stack.

The ADSP-BF531/ADSP-BF532 processor event controller consists of two stages, the core event controller (CEC) and the system interrupt controller (SIC). The core event controller works with the system interrupt controller to prioritize and control all system events. Conceptually, interrupts from the peripherals enter into the SIC, and are then routed directly into the general-purpose interrupts of the CEC.

Core Event Controller (CEC)

The CEC supports nine general-purpose interrupts (IVG15–7), in addition to the dedicated interrupt and exception events. Of these general-purpose interrupts, the two lowest priority interrupts (IVG15–14) are recommended to be reserved for software interrupt handlers, leaving seven prioritized interrupt inputs to support the peripherals of theADSP-BF531/ADSP-BF532 processor. Table 2 describes the inputs to the CEC, identifies their names in the event vector table (EVT), and lists their priorities.

Table 2. Core Event Controller (CEC)

Priority (0 is Highest)	Event Class	EVT Entry
0	Emulation/Test Control	EMU
1	Reset	RST
2	Nonmaskable Interrupt	NMI
3	Exception	EVX
4	Reserved	
5	Hardware Error	IVHW
6	Core Timer	IVTMR
7	General Interrupt 7	IVG7
8	General Interrupt 8	IVG8
9	General Interrupt 9	IVG9
10	General Interrupt 10	IVG10
11	General Interrupt 11	IVG11
12	General Interrupt 12	IVG12
13	General Interrupt 13	IVG13
14	General Interrupt 14	IVG14
15	General Interrupt 15	IVG15

System Interrupt Controller (SIC)

The system interrupt controller provides the mapping and routing of events from the many peripheral interrupt sources to the prioritized general-purpose interrupt inputs of the CEC.

Although the ADSP-BF531/ADSP-BF532 processor provides a default mapping, the user can alter the mappings and priorities of interrupt events by writing the appropriate values into the interrupt assignment registers (IAR). Table 3 describes the inputs into the SIC and the default mappings into the CEC.

Table 3. System Interrupt Controller (SIC)

Peripheral Interrupt Event	Default Mapping
PLL Wakeup	IVG7
DMA Error	IVG7
PPI Error	IVG7
SPORT 0 Error	IVG7
SPORT 1 Error	IVG7
SPI Error	IVG7
UART Error	IVG7
Real-Time Clock	IVG8
DMA Channel 0 (PPI)	IVG8
DMA Channel 1 (SPORT 0 Receive)	IVG9
DMA Channel 2 (SPORT 0 Transmit)	IVG9
DMA Channel 3 (SPORT 1 Receive)	IVG9
DMA Channel 4 (SPORT 1 Transmit)	IVG9
DMA Channel 5 (SPI)	IVG10
DMA Channel 6 (UART Receive)	IVG10
DMA Channel 7 (UART Transmit)	IVG10
Timer 0	IVG11
Timer 1	IVG11
Timer 2	IVG11
PF Interrupt A	IVG12
PF Interrupt B	IVG12
DMA Channels 8 and 9 (Memory DMA Stream 1)	IVG13
DMA Channels 10 and 11 (Memory DMA Stream 0)	IVG13
Software Watchdog Timer	IVG13

Event Control

The ADSP-BF531/ADSP-BF532 processor provides the user with a very flexible mechanism to control the processing of events. In the CEC, three registers are used to coordinate and control events. Each register is 16 bits wide:

- CEC interrupt latch register (ILAT) – The ILAT register indicates when events have been latched. The appropriate bit is set when the processor has latched the event and cleared when the event has been accepted into the system. This register is updated automatically by the controller, but it may be written only when its corresponding IMASK bit is cleared.
- CEC interrupt mask register (IMASK) – The IMASK register controls the masking and unmasking of individual events. When a bit is set in the IMASK register, that event is unmasked and will be processed by the CEC when asserted. A cleared bit in the IMASK register masks the event, preventing the processor from servicing the event even though the event may be latched in the ILAT register. This register may be read or written while in supervisor mode. (Note that general-purpose interrupts can be globally enabled and disabled with the STI and CLI instructions, respectively.)
- CEC interrupt pending register (IPEND) – The IPEND register keeps track of all nested events. A set bit in the IPEND register indicates the event is currently active or nested at some level. This register is updated automatically by the controller but may be read while in supervisor mode.

The SIC allows further control of event processing by providing three 32-bit interrupt control and status registers. Each register contains a bit corresponding to each of the peripheral interrupt events shown in Table 3.

- SIC interrupt mask register (SIC_IMASK) – This register controls the masking and unmasking of each peripheral interrupt event. When a bit is set in the register, that peripheral event is unmasked and will be processed by the system when asserted. A cleared bit in the register masks the peripheral event, preventing the processor from servicing the event.
- SIC interrupt status register (SIC_ISR) – As multiple peripherals can be mapped to a single event, this register allows the software to determine which peripheral event source triggered the interrupt. A set bit indicates the peripheral is asserting the interrupt, and a cleared bit indicates the peripheral is not asserting the event.
- SIC interrupt wakeup enable register (SIC_IWR) – By enabling the corresponding bit in this register, a peripheral can be configured to wake up the processor, should the core be idled when the event is generated. (For more information, see Dynamic Power Management on Page 12.)

Because multiple interrupt sources can map to a single general-purpose interrupt, multiple pulse assertions can occur simultaneously, before or during interrupt processing for an interrupt event already detected on this interrupt input. The IPEND register contents are monitored by the SIC as the interrupt acknowledgement.

The appropriate ILAT register bit is set when an interrupt rising edge is detected (detection requires two core clock cycles). The bit is cleared when the respective IPEND register bit is set. The IPEND bit indicates that the event has entered into the processor pipeline. At this point the CEC will recognize and queue the next rising edge event on the corresponding event input. The minimum latency from the rising edge transition of the general-purpose interrupt to the IPEND output asserted is three core clock cycles; however, the latency can be much higher, depending on the activity within and the state of the processor.

DMA CONTROLLERS

The ADSP-BF531/ADSP-BF532 processor has multiple, independent DMA controllers that support automated data transfers with minimal overhead for the processor core. DMA transfers can occur between the ADSP-BF531/ADSP-BF532 processor's internal memories and any of its DMA-capable peripherals.

Additionally, DMA transfers can be accomplished between any of the DMA-capable peripherals and external devices connected to the external memory interfaces, including the SDRAM controller and the asynchronous memory controller. DMA-capable peripherals include the SPORTs, SPI port, UART, and PPI. Each individual DMA-capable peripheral has at least one dedicated DMA channel.

The ADSP-BF531/ADSP-BF532 processor DMA controller supports both 1-dimensional (1-D) and 2-dimensional (2-D) DMA transfers. DMA transfer initialization can be implemented from registers or from sets of parameters called descriptor blocks.

The 2-D DMA capability supports arbitrary row and column sizes up to 64K elements by 64K elements, and arbitrary row and column step sizes up to ±32K elements. Furthermore, the column step size can be less than the row step size, allowing implementation of interleaved data streams. This feature is especially useful in video applications where data can be de-interleaved on the fly.

Examples of DMA types supported by the ADSP-BF531/ADSP-BF532 processor DMA controller include:

- A single, linear buffer that stops upon completion
- A circular, autorefreshing buffer that interrupts on each full or fractionally full buffer
- 1-D or 2-D DMA using a linked list of descriptors
- 2-D DMA using an array of descriptors, specifying only the base DMA address within a common page

In addition to the dedicated peripheral DMA channels, there are two memory DMA channels provided for transfers between the various memories of the ADSP-BF531/ADSP-BF532 processor system. This enables transfers of blocks of data between any of the memories—including external SDRAM, ROM, SRAM, and flash memory—with minimal processor intervention. Memory DMA transfers can be controlled by a very flexible descriptor-based methodology or by a standard register-based autobuffer mechanism.

REAL-TIME CLOCK

The ADSP-BF531/ADSP-BF532 processor real-time clock (RTC) provides a robust set of digital watch features, including current time, stopwatch, and alarm. The RTC is clocked by a 32.768 kHz crystal external to the ADSP-BF531/ADSP-BF532 processor. The RTC peripheral has dedicated power supply pins so that it can remain powered up and clocked even when the rest of the processor is in a low power state. The RTC provides several programmable interrupt options, including interrupt per second, minute, hour, or day clock ticks, interrupt on programmable stopwatch countdown, or interrupt at a programmed alarm time.

The 32.768 kHz input clock frequency is divided down to a 1 Hz signal by a prescaler. The counter function of the timer consists of four counters: a 60 second counter, a 60 minute counter, a 24 hour counter, and a 32,768 day counter.

When enabled, the alarm function generates an interrupt when the output of the timer matches the programmed value in the alarm control register. There are two alarms: The first alarm is for a time of day. The second alarm is for a day and time of that day.

The stopwatch function counts down from a programmed value, with one second resolution. When the stopwatch is enabled and the counter underflows, an interrupt is generated.

Like other peripherals, the RTC can wake up the processor from sleep mode upon generation of any RTC wakeup event. Additionally, an RTC wakeup event can wake up the processor from deep sleep mode, and wake up the on-chip internal voltage regulator from a powered-down state.

Connect RTC pins RTXI and RTXO with external components as shown in Figure 5.

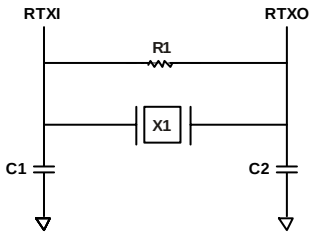

SUGGESTED COMPONENTS:
X1 = ECLIPTEK EC38J (THROUGH-HOLE PACKAGE) OR
EPSON MC405 12 pF LOAD (SURFACE-MOUNT PACKAGE)
C1 = 22 pF
C2 = 22 pF
R1 = 10 MΩ
NOTE: C1 AND C2 ARE SPECIFIC TO CRYSTAL SPECIFIED FOR X1. CONTACT CRYSTAL MANUFACTURER FOR DETAILS. C1 AND C2 SPECIFICATIONS ASSUME BOARD TRACE CAPACITANCE OF 3 pF.

Figure 5. External Components for RTC

WATCHDOG TIMER

The ADSP-BF531/ADSP-BF532 processor includes a 32-bit timer that can be used to implement a software watchdog function. A software watchdog can improve system availability by forcing the processor to a known state through generation of a hardware reset, nonmaskable interrupt (NMI), or general-purpose interrupt, if the timer expires before being reset by software. The programmer initializes the count value of the timer, enables the appropriate interrupt, then enables the timer. Thereafter, the software must reload the counter before it counts to zero from the programmed value. This protects the system from remaining in an unknown state where software, which would normally reset the timer, has stopped running due to an external noise condition or software error.

If configured to generate a hardware reset, the watchdog timer resets both the core and the ADSP-BF531/ADSP-BF532 processor peripherals. After a reset, software can determine if the watchdog was the source of the hardware reset by interrogating a status bit in the watchdog timer control register.

The timer is clocked by the system clock (SCLK), at a maximum frequency of f_{SCLK}.

TIMERS

There are four general-purpose programmable timer units in the ADSP-BF531/ADSP-BF532 processor. Three timers have an external pin that can be configured either as a pulse-width modulator (PWM) or timer output, as an input to clock the timer, or as a mechanism for measuring pulse widths and periods of external events. These timers can be synchronized to an external clock input to the PF1 pin, an external clock input to the PPI_CLK pin, or to the internal SCLK.

The timer units can be used in conjunction with the UART to measure the width of the pulses in the data stream to provide an autobaud detect function for a serial channel.

The timers can generate interrupts to the processor core providing periodic events for synchronization, either to the system clock or to a count of external signals.

In addition to the three general-purpose programmable timers, a fourth timer is also provided. This extra timer is clocked by the internal processor clock and is typically used as a system tick clock for generation of operating system periodic interrupts.

SERIAL PORTS (SPORTs)

The ADSP-BF531/ADSP-BF532 processor incorporates two dual-channel synchronous serial ports (SPORT0 and SPORT1) for serial and multiprocessor communications. The SPORTs support the following features:

- I^2S capable operation.
- Bidirectional operation – Each SPORT has two sets of independent transmit and receive pins, enabling eight channels of I^2S stereo audio.
- Buffered (8-deep) transmit and receive ports – Each port has a data register for transferring data words to and from other processor components and shift registers for shifting data in and out of the data registers.
- Clocking – Each transmit and receive port can either use an external serial clock or generate its own, in frequencies ranging from (f_{SCLK}/131,070) Hz to (f_{SCLK}/2) Hz.
- Word length – Each SPORT supports serial data words from 3 bits to 32 bits in length, transferred most-significant-bit first or least-significant-bit first.
- Framing – Each transmit and receive port can run with or without frame sync signals for each data word. Frame sync signals can be generated internally or externally, active high or low, and with either of two pulse widths and early or late frame sync.
- Companding in hardware – Each SPORT can perform A-law or μ-law companding according to ITU recommendation G.711. Companding can be selected on the transmit and/or receive channel of the SPORT without additional latencies.
- DMA operations with single-cycle overhead – Each SPORT can automatically receive and transmit multiple buffers of memory data. The processor can link or chain sequences of DMA transfers between a SPORT and memory.
- Interrupts – Each transmit and receive port generates an interrupt upon completing the transfer of a data-word or after transferring an entire data buffer or buffers through DMA.
- Multichannel capability – Each SPORT supports 128 channels out of a 1,024-channel window and is compatible with the H.100, H.110, MVIP-90, and HMVIP standards.

An additional 250 mV of SPORT input hysteresis can be enabled by setting Bit 15 of the PLL_CTL register. When this bit is set, all SPORT input pins have the increased hysteresis.

SERIAL PERIPHERAL INTERFACE (SPI) PORT

The ADSP-BF531/ADSP-BF532 processor has an SPI-compatible port that enables the processor to communicate with multiple SPI-compatible devices.

The SPI interface uses three pins for transferring data: two data pins (master output-slave input, MOSI, and master input-slave output, MISO) and a clock pin (serial clock, SCK). An SPI chip select input pin ($\overline{\text{SPISS}}$) lets other SPI devices select the processor, and seven SPI chip select output pins ($\overline{\text{SPISEL7–1}}$) let the processor select other SPI devices. The SPI select pins are reconfigured programmable flag pins. Using these pins, the SPI port provides a full-duplex, synchronous serial interface which supports both master/slave modes and multimaster environments.

The baud rate and clock phase/polarities for the SPI port are programmable, and it has an integrated DMA controller, configurable to support transmit or receive data streams. The SPI DMA controller can only service unidirectional accesses at any given time.

The SPI port clock rate is calculated as:

$$SPI\ Clock\ Rate = \frac{f_{SCLK}}{2 \times SPI_Baud}$$

Where the 16-bit SPI_Baud register contains a value of 2 to 65,535.

During transfers, the SPI port simultaneously transmits and receives by serially shifting data in and out on its two serial data lines. The serial clock line synchronizes the shifting and sampling of data on the two serial data lines.

UART PORT

The ADSP-BF531/ADSP-BF532 processor provides a full-duplex universal asynchronous receiver/transmitter (UART) port, which is fully compatible with PC-standard UARTs. The UART port provides a simplified UART interface to other peripherals or hosts, supporting full-duplex, DMA-supported, asynchronous transfers of serial data. The UART port includes support for 5 data bits to 8 data bits, 1 stop bit or 2 stop bits, and none, even, or odd parity. The UART port supports two modes of operation:

- PIO (programmed I/O) – The processor sends or receives data by writing or reading I/O-mapped UART registers. The data is double-buffered on both transmit and receive.
- DMA (direct memory access) – The DMA controller transfers both transmit and receive data. This reduces the number and frequency of interrupts required to transfer

data to and from memory. The UART has two dedicated DMA channels, one for transmit and one for receive. These DMA channels have lower default priority than most DMA channels because of their relatively low service rates.

The baud rate, serial data format, error code generation and status, and interrupts for the UART port are programmable.

The UART programmable features include:

- Supporting bit rates ranging from (f_{SCLK}/1,048,576) bits per second to (f_{SCLK}/16) bits per second.
- Supporting data formats from seven bits to 12 bits per frame.
- Both transmit and receive operations can be configured to generate maskable interrupts to the processor.

The UART port's clock rate is calculated as:

$$UART\ Clock\ Rate = \frac{f_{SCLK}}{16 \times UART_Divisor}$$

Where the 16-bit UART_Divisor comes from the DLH register (most significant 8 bits) and DLL register (least significant 8 bits).

In conjunction with the general-purpose timer functions, autobaud detection is supported.

The capabilities of the UART are further extended with support for the Infrared Data Association (IrDA) serial infrared physical layer link specification (SIR) protocol.

PROGRAMMABLE FLAGS (PFx)

The ADSP-BF531/ADSP-BF532 processor has 16 bidirectional, general-purpose programmable flag (PF15–0) pins. Each programmable flag can be individually controlled by manipulation of the flag control, status and interrupt registers:

- Flag direction control register – Specifies the direction of each individual PFx pin as input or output.
- Flag control and status registers – The ADSP-BF531/ADSP-BF532 processor employs a "write one to modify" mechanism that allows any combination of individual flags to be modified in a single instruction, without affecting the level of any other flags. Four control registers are provided. One register is written in order to set flag values, one register is written in order to clear flag values, one register is written in order to toggle flag values, and one register is written in order to specify a flag value. Reading the flag status register allows software to interrogate the sense of the flags.
- Flag interrupt mask registers – The two flag interrupt mask registers allow each individual PFx pin to function as an interrupt to the processor. Similar to the two flag control registers that are used to set and clear individual flag values, one flag interrupt mask register sets bits to enable interrupt function, and the other flag interrupt mask register clears bits to disable interrupt function. PFx pins defined as inputs can be configured to generate hardware interrupts, while output PFx pins can be triggered by software interrupts.
- Flag interrupt sensitivity registers – The two flag interrupt sensitivity registers specify whether individual PFx pins are level- or edge-sensitive and specify—if edge-sensitive—whether just the rising edge or both the rising and falling edges of the signal are significant. One register selects the type of sensitivity, and one register selects which edges are significant for edge-sensitivity.

PARALLEL PERIPHERAL INTERFACE

The processor provides a parallel peripheral interface (PPI) that can connect directly to parallel A/D and D/A converters, ITU-R 601/656 video encoders and decoders, and other general-purpose peripherals. The PPI consists of a dedicated input clock pin, up to three frame synchronization pins, and up to 16 data pins. The input clock supports parallel data rates up to half the system clock rate.

In ITU-R 656 modes, the PPI receives and parses a data stream of 8-bit or 10-bit data elements. On-chip decode of embedded preamble control and synchronization information is supported.

Three distinct ITU-R 656 modes are supported:

- Active video only – The PPI does not read in any data between the end of active video (EAV) and start of active video (SAV) preamble symbols, or any data present during the vertical blanking intervals. In this mode, the control byte sequences are not stored to memory; they are filtered by the PPI.
- Vertical blanking only – The PPI only transfers vertical blanking interval (VBI) data, as well as horizontal blanking information and control byte sequences on VBI lines.
- Entire field – The entire incoming bitstream is read in through the PPI. This includes active video, control preamble sequences, and ancillary data that may be embedded in horizontal and vertical blanking intervals.

Though not explicitly supported, ITU-R 656 output functionality can be achieved by setting up the entire frame structure (including active video, blanking, and control information) in memory and streaming the data out the PPI in a frame sync-less mode. The processor's 2-D DMA features facilitate this transfer by allowing the static frame buffer (blanking and control codes) to be placed in memory once, and simply updating the active video information on a per-frame basis.

The general-purpose modes of the PPI are intended to suit a wide variety of data capture and transmission applications. The modes are divided into four main categories, each allowing up to 16 bits of data transfer per PPI_CLK cycle:

- Data receive with internally generated frame syncs
- Data receive with externally generated frame syncs
- Data transmit with internally generated frame syncs
- Data transmit with externally generated frame syncs

These modes support ADC/DAC connections, as well as video communication with hardware signaling. Many of the modes support more than one level of frame synchronization. If desired, a programmable delay can be inserted between assertion of a frame sync and reception/transmission of data.

DYNAMIC POWER MANAGEMENT

The ADSP-BF531/ADSP-BF532 processor provides five operating modes, each with a different performance/power profile. In addition, dynamic power management provides the control functions to dynamically alter the processor core supply voltage, further reducing power dissipation. Control of clocking to each of the ADSP-BF531/ADSP-BF532 processor peripherals also reduces power consumption. See Table 5 for a summary of the power settings for each mode.

Table 4. Power Domains

Power Domain	V_{DD} Range
All internal logic, except RTC	V_{DDINT}
RTC internal logic and crystal I/O	V_{DDRTC}
All other I/O	V_{DDEXT}

Full-On Operating Mode—Maximum Performance

In the full-on mode, the PLL is enabled and is not bypassed, providing capability for maximum operational frequency. This is the power-up default execution state in which maximum performance can be achieved. The processor core and all enabled peripherals run at full speed.

Active Operating Mode—Moderate Power Savings

In the active mode, the PLL is enabled but bypassed. Because the PLL is bypassed, the processor's core clock (CCLK) and system clock (SCLK) run at the input clock (CLKIN) frequency. In this mode, the CLKIN to CCLK multiplier ratio can be changed, although the changes are not realized until the full-on mode is entered. DMA access is available to appropriately configured L1 memories.

In the active mode, it is possible to disable the PLL through the PLL control register (PLL_CTL). If disabled, the PLL must be re-enabled before transitioning to the full-on or sleep modes.

Table 5. Power Settings

Mode	PLL	PLL Bypassed	Core Clock (CCLK)	System Clock (SCLK)	Core Power
Full-On	Enabled	No	Enabled	Enabled	On
Active	Enabled/ Disabled	Yes	Enabled	Enabled	On
Sleep	Enabled		Disabled	Enabled	On
Deep Sleep	Disabled		Disabled	Disabled	On
Hibernate	Disabled		Disabled	Disabled	Off

Hibernate Operating Mode—Maximum Static Power Savings

The hibernate mode maximizes static power savings by disabling the voltage and clocks to the processor core (CCLK) and to all the synchronous peripherals (SCLK). The internal voltage regulator for the processor can be shut off by writing b#00 to the FREQ bits of the VR_CTL register. This disables both CCLK and SCLK. Furthermore, it sets the internal power supply voltage (V_{DDINT}) to 0 V to provide the lowest static power dissipation. Any critical information stored internally (memory contents, register contents, etc.) must be written to a nonvolatile storage device prior to removing power if the processor state is to be preserved. Since V_{DDEXT} is still supplied in this mode, all of the external pins three-state, unless otherwise specified. This allows other devices that may be connected to the processor to have power still applied without drawing unwanted current. The internal supply regulator can be woken up either by a real-time clock wakeup or by asserting the $\overline{\text{RESET}}$ pin.

Sleep Operating Mode—High Dynamic Power Savings

The sleep mode reduces dynamic power dissipation by disabling the clock to the processor core (CCLK). The PLL and system clock (SCLK), however, continue to operate in this mode. Typically an external event or RTC activity will wake up the processor. When in the sleep mode, assertion of wakeup will cause the processor to sense the value of the BYPASS bit in the PLL control register (PLL_CTL). If BYPASS is disabled, the processor will transition to the full-on mode. If BYPASS is enabled, the processor will transition to the active mode.

When in the sleep mode, system DMA access to L1 memory is not supported.

Deep Sleep Operating Mode—Maximum Dynamic Power Savings

The deep sleep mode maximizes dynamic power savings by disabling the clocks to the processor core (CCLK) and to all synchronous peripherals (SCLK). Asynchronous peripherals, such as the RTC, may still be running but will not be able to access internal resources or external memory. This powered-down mode can only be exited by assertion of the reset interrupt ($\overline{\text{RESET}}$) or by an asynchronous interrupt generated by the RTC. When in deep sleep mode, an RTC asynchronous interrupt causes the processor to transition to the active mode. Assertion of $\overline{\text{RESET}}$ while in deep sleep mode causes the processor to transition to the full-on mode.

Power Savings

As shown in Table 4, the ADSP-BF531/ADSP-BF532 processor supports three different power domains. The use of multiple power domains maximizes flexibility, while maintaining compliance with industry standards and conventions. By isolating the internal logic of the ADSP-BF531/ADSP-BF532 processor into its own power domain, separate from the RTC and other I/O, the processor can take advantage of dynamic power management, without affecting the RTC or other I/O devices. There are no sequencing requirements for the various power domains.

The power dissipated by a processor is largely a function of the clock frequency of the processor and the square of the operating voltage. For example, reducing the clock frequency by 25% results in a 25% reduction in dynamic power dissipation, while reducing the voltage by 25% reduces dynamic power dissipation by more than 40%. Further, these power savings are additive, in that if the clock frequency and supply voltage are both reduced, the power savings can be dramatic.

The dynamic power management feature of the ADSP-BF531/ADSP-BF532 processor allows both the processor's input voltage (V_{DDINT}) and clock frequency (f_{CCLK}) to be dynamically controlled.

The savings in power dissipation can be modeled using the power savings factor and % power savings calculations.

The power savings factor is calculated as:

$$\textit{power savings factor} = \frac{f_{CCLKRED}}{f_{CCLKNOM}} \times \left(\frac{V_{DDINTRED}}{V_{DDINTNOM}}\right)^2 \times \left(\frac{t_{RED}}{t_{NOM}}\right)$$

where the variables in the equations are:

$f_{CCLKNOM}$ is the nominal core clock frequency

$f_{CCLKRED}$ is the reduced core clock frequency

$V_{DDINTNOM}$ is the nominal internal supply voltage

$V_{DDINTRED}$ is the reduced internal supply voltage

t_{NOM} is the duration running at $f_{CCLKNOM}$

t_{RED} is the duration running at $f_{CCLKRED}$

The percent power savings is calculated as:

$$\%\ \textit{power savings} = (1 - \textit{power savings factor}) \times 100\%$$

VOLTAGE REGULATION

The Blackfin processor provides an on-chip voltage regulator that can generate processor core voltage levels 0.85 V to 1.2 V from an external 2.25 V to 3.6 V supply. Figure 6 shows the typical external components required to complete the power management system.† The regulator controls the internal logic voltage levels and is programmable with the voltage regulator control register (VR_CTL) in increments of 50 mV. To reduce standby power consumption, the internal voltage regulator can be programmed to remove power to the processor core while keeping I/O power (V_{DDEXT}) supplied. While in hibernation, V_{DDEXT} can still be applied, eliminating the need for external buffers. The voltage regulator can be activated from this power-down state either through an RTC wakeup or by asserting $\overline{\text{RESET}}$, which will then initiate a boot sequence. The regulator can also be disabled and bypassed at the user's discretion.

CLOCK SIGNALS

The ADSP-BF531/ADSP-BF532 processor can be clocked by an external crystal, a sine wave input, or a buffered, shaped clock derived from an external clock oscillator.

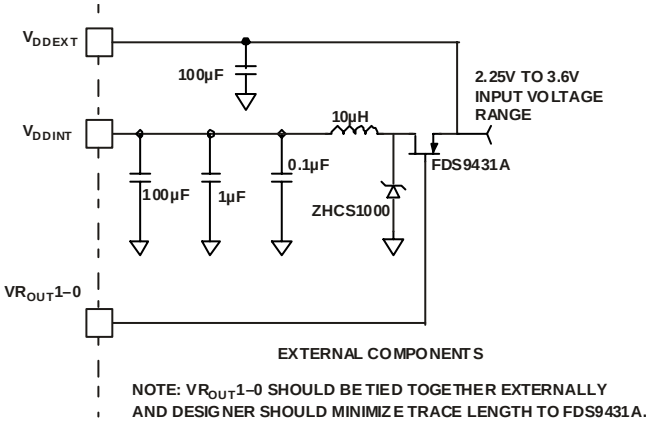

Figure 6. Voltage Regulator Circuit

If an external clock is used, it must not be halted, changed, or operated below the specified frequency during normal operation. This signal is connected to the processor's CLKIN pin. When an external clock is used, the XTAL pin must be left unconnected.

Alternatively, because the ADSP-BF531/ADSP-BF532 processor includes an on-chip oscillator circuit, an external crystal may be used. The crystal should be connected across the CLKIN and XTAL pins, with two capacitors connected as shown in Figure 7. Capacitor values are dependent on crystal type and should be specified by the crystal manufacturer. A parallel-resonant, fundamental frequency, microprocessor-grade crystal should be used.

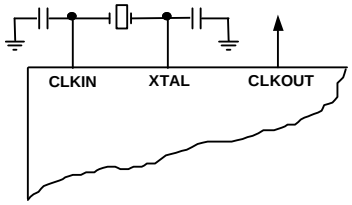

Figure 7. External Crystal Connections

As shown in Figure 8 on Page 14, the core clock (CCLK) and system peripheral clock (SCLK) are derived from the input clock (CLKIN) signal. An on-chip PLL is capable of multiplying the CLKIN signal by a user programmable 0.5× to 64× multiplication factor (bounded by specified minimum and maximum VCO frequencies). The default multiplier is 10×, but it can be modified by a software instruction sequence. On-the-fly frequency changes can be effected by simply writing to the PLL_DIV register.

All on-chip peripherals are clocked by the system clock (SCLK). The system clock frequency is programmable by means of the SSEL3–0 bits of the PLL_DIV register. The values programmed

† See EE-228: Switching Regulator Design Considerations for Blackfin Processors.

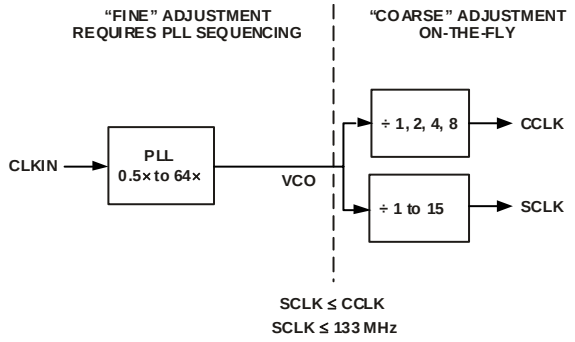

Figure 8. Frequency Modification Methods

into the SSEL fields define a divide ratio between the PLL output (VCO) and the system clock. SCLK divider values are 1 through 15. Table 6 illustrates typical system clock ratios.

Table 6. Example System Clock Ratios

Signal Name SSEL3–0	Divider Ratio VCO/SCLK	Example Frequency Ratios (MHz)	
		VCO	SCLK
0001	1:1	100	100
0011	3:1	400	133

The maximum frequency of the system clock is f_{SCLK}. Note that the divisor ratio must be chosen to limit the system clock frequency to its maximum of f_{SCLK}. The SSEL value can be changed dynamically without any PLL lock latencies by writing the appropriate values to the PLL divisor register (PLL_DIV).

The core clock (CCLK) frequency can also be dynamically changed by means of the CSEL1–0 bits of the PLL_DIV register. Supported CCLK divider ratios are 1, 2, 4, and 8, as shown in Table 7. This programmable core clock capability is useful for fast core frequency modifications.

Table 7. Core Clock Ratios

Signal Name CSEL1–0	Divider Ratio VCO/CCLK	Example Frequency Ratios (MHz)	
		VCO	CCLK
00	1:1	300	300
01	2:1	300	150
10	4:1	400	100
11	8:1	200	25

BOOTING MODES

The ADSP-BF531/ADSP-BF532 processor has two mechanisms (listed in Table 8) for automatically loading internal L1 instruction memory after a reset. A third mode is provided to execute from external memory, bypassing the boot sequence.

Table 8. Booting Modes

BMODE1–0	Description
00	Execute from 16-bit external memory (bypass boot ROM)
01	Boot from 8-bit or 16-bit FLASH
10	Boot from SPI host slave mode
11	Boot from SPI serial EEPROM (8-, 16-, or 24-bit address range)

The BMODE pins of the reset configuration register, sampled during power-on resets and software-initiated resets, implement the following modes:

- Execute from 16-bit external memory – Execution starts from address 0x2000 0000 with 16-bit packing. The boot ROM is bypassed in this mode. All configuration settings are set for the slowest device possible (3-cycle hold time; 15-cycle R/W access times; 4-cycle setup).
- Boot from 8-bit or 16-bit external flash memory – The flash boot routine located in boot ROM memory space is set up using asynchronous memory bank 0. All configuration settings are set for the slowest device possible (3-cycle hold time; 15-cycle R/W access times; 4-cycle setup).
- Boot from SPI serial EEPROM (8-, 16-, or 24-bit addressable) – The SPI uses the PF2 output pin to select a single SPI EEPROM device, submits successive read commands at addresses 0x00, 0x0000, and 0x000000 until a valid 8-, 16-, or 24-bit addressable EEPROM is detected, and begins clocking data into the beginning of L1 instruction memory.

For each of the boot modes, a 10-byte header is first read from an external memory device. The header specifies the number of bytes to be transferred and the memory destination address. Multiple memory blocks may be loaded by any boot sequence. Once all blocks are loaded, program execution commences from the start of L1 instruction SRAM.

In addition, Bit 4 of the reset configuration register can be set by application code to bypass the normal boot sequence during a software reset. For this case, the processor jumps directly to the beginning of L1 instruction memory.

INSTRUCTION SET DESCRIPTION

The Blackfin processor family assembly language instruction set employs an algebraic syntax designed for ease of coding and readability. The instructions have been specifically tuned to provide a flexible, densely encoded instruction set that compiles to a very small final memory size. The instruction set also provides fully featured multifunction instructions that allow the programmer to use many of the processor core resources in a single

instruction. Coupled with many features more often seen on microcontrollers, this instruction set is very efficient when compiling C and C++ source code. In addition, the architecture supports both user (algorithm/application code) and supervisor (O/S kernel, device drivers, debuggers, ISRs) modes of operation, allowing multiple levels of access to core processor resources.

The assembly language, which takes advantage of the processor's unique architecture, offers the following advantages:

- Seamlessly integrated DSP/CPU features are optimized for both 8-bit and 16-bit operations.
- A multi-issue load/store modified Harvard architecture, which supports two 16-bit MAC or four 8-bit ALU + two load/store + two pointer updates per cycle.
- All registers, I/O, and memory are mapped into a unified 4G byte memory space, providing a simplified programming model.
- Microcontroller features, such as arbitrary bit and bit-field manipulation, insertion, and extraction; integer operations on 8-, 16-, and 32-bit data types; and separate user and supervisor stack pointers.
- Code density enhancements, which include intermixing of 16-bit and 32-bit instructions (no mode switching, no code segregation). Frequently used instructions are encoded in 16 bits.

DEVELOPMENT TOOLS

The ADSP-BF531/ADSP-BF532 processor is supported with a complete set of CROSSCORE®† software and hardware development tools, including Analog Devices emulators and VisualDSP++®‡ development environment. The same emulator hardware that supports other Blackfin processors also fully emulates the ADSP-BF531/ADSP-BF532 processor.

The VisualDSP++ project management environment lets programmers develop and debug an application. This environment includes an easy to use assembler (which is based on an algebraic syntax), an archiver (librarian/library builder), a linker, a loader, a cycle-accurate instruction level simulator, a C/C++ compiler, and a C/C++ runtime library that includes DSP and mathematical functions. A key point for these tools is C/C++ code efficiency. The compiler has been developed for efficient translation of C/C++ code to processor assembly. The processor has architectural features that improve the efficiency of compiled C/C++ code.

The VisualDSP++ debugger has a number of important features. Data visualization is enhanced by a plotting package that offers a significant level of flexibility. This graphical representation of user data enables the programmer to quickly determine the performance of an algorithm. As algorithms grow in complexity, this capability can have increasing significance on the designer's development schedule, increasing productivity.

Statistical profiling enables the programmer to nonintrusively poll the processor as it is running the program. This feature, unique to VisualDSP++, enables the software developer to passively gather important code execution metrics without interrupting the real-time characteristics of the program. Essentially, the developer can identify bottlenecks in software quickly and efficiently. By using the profiler, the programmer can focus on those areas in the program that impact performance and take corrective action.

Debugging both C/C++ and assembly programs with the VisualDSP++ debugger, programmers can:

- View mixed C/C++ and assembly code (interleaved source and object information).
- Insert breakpoints.
- Set conditional breakpoints on registers, memory, and stacks.
- Trace instruction execution.
- Perform linear or statistical profiling of program execution.
- Fill, dump, and graphically plot the contents of memory.
- Perform source level debugging.
- Create custom debugger windows.

The VisualDSP++ IDDE lets programmers define and manage software development. Its dialog boxes and property pages let programmers configure and manage all of the Blackfin development tools, including the color syntax highlighting in the VisualDSP++ editor. This capability permits programmers to:

- Control how the development tools process inputs and generate outputs
- Maintain a one-to-one correspondence with the tool's command line switches

The VisualDSP++ Kernel (VDK) incorporates scheduling and resource management tailored specifically to address the memory and timing constraints of DSP programming. These capabilities enable engineers to develop code more effectively, eliminating the need to start from the very beginning, when developing new application code. The VDK features include threads, critical and unscheduled regions, semaphores, events, and device flags. The VDK also supports priority-based, preemptive, cooperative, and time-sliced scheduling approaches. In addition, the VDK was designed to be scalable. If the application does not use a specific feature, the support code for that feature is excluded from the target system.

Because the VDK is a library, a developer can decide whether to use it or not. The VDK is integrated into the VisualDSP++ development environment, but can also be used via standard command line tools. When the VDK is used, the development environment assists the developer with many error prone tasks and assists in managing system resources, automating the generation of various VDK-based objects, and visualizing the system state, when debugging an application that uses the VDK.

VCSE is Analog Devices technology for creating, using, and reusing software components (independent modules of substantial functionality) to quickly and reliably assemble software

† CROSSCORE is a registered trademark of Analog Devices, Inc.
‡ VisualDSP++ is a registered trademark of Analog Devices, Inc.

applications. Components can be downloaded from the Web and dropped into the application. Component archives can be published from within VisualDSP++. VCSE supports component implementation in C/C++ or assembly language.

Use the expert linker to visually manipulate the placement of code and data on the embedded system. View memory utilization in a color coded graphical form, easily move code and data to different areas of the processor or external memory with the drag of the mouse, and examine runtime stack and heap usage. The expert linker is fully compatible with existing linker definition file (LDF), allowing the developer to move between the graphical and textual environments.

Analog Devices emulators use the IEEE 1149.1 JTAG test access port of the ADSP-BF531/ADSP-BF532 processor to monitor and control the target board processor during emulation. The emulator provides full speed emulation, allowing inspection and modification of memory, registers, and processor stacks. Non-intrusive in-circuit emulation is assured by the use of the processor's JTAG interface—the emulator does not affect target system loading or timing.

In addition to the software and hardware development tools available from Analog Devices, third parties provide a wide range of tools supporting the Blackfin processor family. Hardware tools include Blackfin processor PC plug-in cards. Third party software tools include DSP libraries, real-time operating systems, and block diagram design tools.

EZ-KIT Lite Evaluation Board

For evaluation of ADSP-BF531/ADSP-BF532 processors, use the ADSP-BF531/ADSP-BF532 EZ-KIT Lite® board available from Analog Devices. Order part number ADDS-BF533-EZLITE. The board comes with on-chip emulation capabilities and is equipped to enable software development. Multiple daughter cards are available.

DESIGNING AN EMULATOR-COMPATIBLE PROCESSOR BOARD

The Analog Devices family of emulators are tools that every system developer needs to test and debug hardware and software systems. Analog Devices has supplied an IEEE 1149.1 JTAG test access port (TAP) on each JTAG processor. The emulator uses the TAP to access the internal features of the processor, allowing the developer to load code, set breakpoints, observe variables, observe memory, and examine registers. The processor must be halted to send data and commands, but once an operation has been completed by the emulator, the processor system is set running at full speed with no impact on system timing.

To use these emulators, the target board must include a header that connects the processor's JTAG port to the emulator.

For details on target board design issues including mechanical layout, single processor connections, multiprocessor scan chains, signal buffering, signal termination, and emulator pod logic, see the *EE-68: Analog Devices JTAG Emulation Technical Reference* on the Analog Devices website (www.analog.com)—use site search on "EE-68." This document is updated regularly to keep pace with improvements to emulator support.

RELATED DOCUMENTS

The following publications that describe the ADSP-BF531/ADSP-BF532 processors (and related processors) can be ordered from any Analog Devices sales office or accessed electronically on our website:

- *Getting Started With Blackfin Processors*
- *ADSP-BF533 Blackfin Processor Hardware Reference*
- *ADSP-BF53x/BF56x Blackfin Processor Programming Reference*
- *ADSP-BF531/ADSP-BF532 Blackfin Processor Anomaly List*

PIN DESCRIPTIONS

ADSP-BF531/ADSP-BF532 processor pin definitions are listed in Table 9.

All pins are three-stated during and immediately after reset, except the memory interface, asynchronous memory control, and synchronous memory control pins, which are driven high.

If $\overline{BR}$ is active, then the memory pins are also three-stated. All unused I/O pins have their input buffers disabled with the exception of the pins that need pull-ups or pull-downs as noted in the table footnotes.

In order to maintain maximum functionality and reduce package size and pin count, some pins have dual, multiplexed functionality. In cases where pin functionality is reconfigurable, the default state is shown in plain text, while alternate functionality is shown in italics.

Table 9. Pin Descriptions

Pin Name	Type	Function	Driver Type[1]	Pull-Up/Down Requirement
Memory Interface				
ADDR19–1	O	Address Bus for Async/Sync Access	A	None
DATA15–0	I/O	Data Bus for Async/Sync Access	A	None
$\overline{ABE1–0}$/SDQM1–0	O	Byte Enables/Data Masks for Async/Sync Access	A	None
$\overline{BR}$	I	Bus Request		Pull-up Required If Function Not Used
$\overline{BG}$	O	Bus Grant	A	None
$\overline{BGH}$	O	Bus Grant Hang	A	None
Asynchronous Memory Control				
$\overline{AMS3–0}$	O	Bank Select	A	None
ARDY	I	Hardware Ready Control		Pull-up Required If Function Not Used
$\overline{AOE}$	O	Output Enable	A	None
$\overline{ARE}$	O	Read Enable	A	None
$\overline{AWE}$	O	Write Enable	A	None
Synchronous Memory Control				
$\overline{SRAS}$	O	Row Address Strobe	A	None
$\overline{SCAS}$	O	Column Address Strobe	A	None
$\overline{SWE}$	O	Write Enable	A	None
SCKE	O	Clock Enable	A	None
CLKOUT	O	Clock Output	B	None
SA10	O	A10 Pin	A	None
$\overline{SMS}$	O	Bank Select	A	None
Timers				
TMR0	I/O	Timer 0	C	None
TMR1/*PPI_FS1*	I/O	Timer 1/*PPI Frame Sync1*	C	None
TMR2/*PPI_FS2*	I/O	Timer 2/*PPI Frame Sync2*	C	None

Table 9. Pin Descriptions (Continued)

Pin Name	Type	Function	Driver Type[1]	Pull-Up/Down Requirement
Parallel Peripheral Interface Port/GPIO				
PF0/*$\overline{SPISS}$*	I/O	Programmable Flag 0/*SPI Slave Select Input*	C	None
PF1/*SPISEL1/TMRCLK*	I/O	Programmable Flag 1/*SPI Slave Select Enable 1/External Timer Reference*	C	None
PF2/*SPISEL2*	I/O	Programmable Flag 2/*SPI Slave Select Enable 2*	C	None
PF3/*SPISEL3/PPI_FS3*	I/O	Programmable Flag 3/*SPI Slave Select Enable 3/PPI Frame Sync 3*	C	None
PF4/*SPISEL4/PPI15*	I/O	Programmable Flag 4/*SPI Slave Select Enable 4/PPI 15*	C	None
PF5/*SPISEL5/PPI14*	I/O	Programmable Flag 5/*SPI Slave Select Enable 5/PPI 14*	C	None
PF6/*SPISEL6/PPI13*	I/O	Programmable Flag 6/*SPI Slave Select Enable 6/PPI 13*	C	None
PF7/*SPISEL7/PPI12*	I/O	Programmable Flag 7/*SPI Slave Select Enable 7/PPI 12*	C	None
PF8/*PPI11*	I/O	Programmable Flag 8/*PPI 11*	C	None
PF9/*PPI10*	I/O	Programmable Flag 9/*PPI 10*	C	None
PF10/*PPI9*	I/O	Programmable Flag 10/*PPI 9*	C	None
PF11/*PPI8*	I/O	Programmable Flag 11/*PPI 8*	C	None
PF12/*PPI7*	I/O	Programmable Flag 12/*PPI 7*	C	None
PF13/*PPI6*	I/O	Programmable Flag 13/*PPI 6*	C	None
PF14/*PPI5*	I/O	Programmable Flag 14/*PPI 5*	C	None
PF15/*PPI4*	I/O	Programmable Flag 15/*PPI 4*	C	None
PPI3–0	I/O	*PPI3–0*	C	None
PPI_CLK	I	PPI Clock	C	None
JTAG Port				
TCK	I	JTAG Clock		Internal Pull-down
TDO	O	JTAG Serial Data Out	C	None
TDI	I	JTAG Serial Data In		Internal Pull-down
TMS	I	JTAG Mode Select		Internal Pull-down
$\overline{TRST}$	I	JTAG Reset		External Pull-down If JTAG Not Used
$\overline{EMU}$	O	Emulation Output	C	None
SPI Port				
MOSI	I/O	Master Out Slave In	C	None
MISO	I/O	Master In Slave Out	C	Pull HIGH Through a 4.7 kΩ Resistor if Booting via the SPI Port.
SCK	I/O	SPI Clock	D	None

Table 9. Pin Descriptions (Continued)

Pin Name	Type	Function	Driver Type[1]	Pull-Up/Down Requirement
Serial Ports				
RSCLK0	I/O	SPORT0 Receive Serial Clock	D	None
RFS0	I/O	SPORT0 Receive Frame Sync	C	None
DR0PRI	I	SPORT0 Receive Data Primary		None
DR0SEC	I	SPORT0 Receive Data Secondary		None
TSCLK0	I/O	SPORT0 Transmit Serial Clock	D	None
TFS0	I/O	SPORT0 Transmit Frame Sync	C	None
DT0PRI	O	SPORT0 Transmit Data Primary	C	None
DT0SEC	O	SPORT0 Transmit Data Secondary	C	None
RSCLK1	I/O	SPORT1 Receive Serial Clock	D	None
RFS1	I/O	SPORT1 Receive Frame Sync	C	None
DR1PRI	I	SPORT1 Receive Data Primary		None
DR1SEC	I	SPORT1 Receive Data Secondary		None
TSCLK1	I/O	SPORT1 Transmit Serial Clock	D	None
TFS1	I/O	SPORT1 Transmit Frame Sync	C	None
DT1PRI	O	SPORT1 Transmit Data Primary	C	None
DT1SEC	O	SPORT1 Transmit Data Secondary	C	None
UART Port				
RX	I	UART Receive		None
TX	O	UART Transmit	C	None
Real-Time Clock				
RTXI	I	RTC Crystal Input		Pull LOW when not used
RTXO	O	RTC Crystal Output		N/A
Clock				
CLKIN	I	Clock/Crystal Input		Needs to be at a Level or Clocking
XTAL	O	Crystal Output		None
Mode Controls				
$\overline{\text{RESET}}$	I	Reset		Always Active if Core Power On
NMI	I	Nonmaskable Interrupt		Pull LOW when not used
BMODE1–0	I	Boot Mode Strap		Pull-up or Pull-down Required
Voltage Regulator				
VROUT1–0	O	External FET Drive		N/A
Supplies				
V_{DDEXT}	P	I/O Power Supply		N/A
V_{DDINT}	P	Core Power Supply		N/A
V_{DDRTC}	P	Real-Time Clock Power Supply		N/A
GND	G	External Ground		N/A

[1] Refer to Figure 28 on Page 43 to Figure 39 on Page 44.

SPECIFICATIONS

Component specifications are subject to change without notice.

OPERATING CONDITIONS

Parameter		Conditions	Min	Nominal	Max	Unit
V_{DDINT}	Internal Supply Voltage[1, 2]		0.8	1.2	1.32	V
V_{DDINT}	Internal Supply Voltage[1, 3]		0.95	1.2	1.32	V
V_{DDEXT}	External Supply Voltage[2]		1.75	1.8/2.5/3.3	3.6	V
V_{DDEXT}	External Supply Voltage[3, 4]		2.7	3.3	3.6	V
V_{DDRTC}	Real-Time Clock Power Supply Voltage[2]		1.75	1.8/2.5/3.3	3.6	V
V_{DDRTC}	Real-Time Clock Power Supply Voltage[3, 4]		2.7	3.3	3.6	V
V_{IH}	High Level Input Voltage[5, 6]	V_{DDEXT} = 1.85 V	1.3		1.85	V
V_{IH}	High Level Input Voltage[5, 6]	V_{DDEXT} = Maximum	2.0		3.6	V
$V_{IHCLKIN}$	High Level Input Voltage[7]	V_{DDEXT} = Maximum	2.2		3.6	V
V_{IL}	Low Level Input Voltage[5, 8]	V_{DDEXT} = 1.75 V	–0.3		+0.3	V
V_{IL}	Low Level Input Voltage[5, 8]	V_{DDEXT} = 2.25 V	–0.3		+0.6	V
T_J	Junction Temperature	160-Ball Chip Scale Ball Grid Array (Mini-BGA) @ $T_{AMBIENT}$ = –40°C to +85°C	–40		+100	°C
T_J	Junction Temperature	160-Ball Chip Scale Ball Grid Array (Mini-BGA) @ $T_{AMBIENT}$ = –40°C to +105°C	–40		+125	°C
T_J	Junction Temperature	169-Ball Plastic Ball Grid Array (PBGA) @ $T_{AMBIENT}$ = –40°C to +85°C	–40		+100	°C
T_J	Junction Temperature	169-Ball Plastic Ball Grid Array (PBGA) @ $T_{AMBIENT}$ = –40°C to +105°C	–40		+125	°C
T_J	Junction Temperature	176-Lead Quad Flatpack (LQFP) @ $T_{AMBIENT}$ = –40°C to +85°C	–40		+100	°C

[1] The regulator can generate V_{DDINT} at levels of 0.85 V to 1.2 V with –5 % to +10 % tolerance.
[2] Nonautomotive grade parts, see Ordering Guide on Page 60.
[3] Automotive grade parts, see Ordering Guide on Page 60.
[4] Automotive grade parts in 169-Ball Plastic Ball Grid Array (PBGA) package, see Ordering Guide on Page 60.
[5] The ADSP-BF531/ADSP-BF532 processors are 3.3 V tolerant (always accepts up to 3.6 V maximum V_{IH}), but voltage compliance (on outputs, V_{OH}) depends on the input V_{DDEXT}, because V_{OH} (maximum) approximately equals V_{DDEXT} (maximum). This 3.3 V tolerance applies to bidirectional pins (DATA15–0, TMR2–0, PF15–0, PPI3–0, RSCLK1–0, TSCLK1–0, RFS1–0, TFS1–0, MOSI, MISO, SCK) and input only pins ($\overline{BR}$, ARDY, PPI_CLK, DR0PRI, DR0SEC, DR1PRI, DR1SEC, RX, RTXI, TCK, TDI, TMS, $\overline{TRST}$, CLKIN, $\overline{RESET}$, NMI, and BMODE1–0).
[6] Parameter value applies to all input and bidirectional pins except CLKIN.
[7] Parameter value applies to CLKIN pin only.
[8] Parameter value applies to all input and bidirectional pins.

ELECTRICAL CHARACTERISTICS

Parameter		Test Conditions	Min	Typical	Max	Unit
V_{OH}	High Level Output Voltage[1]	@ V_{DDEXT} = 1.75 V, I_{OH} = –0.5 mA	1.5			V
V_{OH}	High Level Output Voltage[1]	@ V_{DDEXT} = 2.25 V, I_{OH} = –0.5 mA	1.9			V
V_{OH}	High Level Output Voltage[1]	@ V_{DDEXT} = 3.0 V, I_{OH} = –0.5 mA	2.4			V
V_{OL}	Low Level Output Voltage[1]	@ V_{DDEXT} = 1.75 V, I_{OL} = 2.0 mA			0.2	V
V_{OL}	Low Level Output Voltage[1]	@ V_{DDEXT} = 2.25 V/3.0 V, I_{OL} = 2.0 mA			0.4	V
I_{IH}	High Level Input Current[2]	@ V_{DDEXT} = Maximum, V_{IN} = V_{DD} Maximum			10.0	µA
I_{IHP}	High Level Input Current JTAG[3]	@ V_{DDEXT} = Maximum, V_{IN} = V_{DD} Maximum			50.0	µA
I_{IL}[4]	Low Level Input Current[2]	@ V_{DDEXT} = Maximum, V_{IN} = 0 V			10.0	µA
I_{OZH}	Three-State Leakage Current[5]	@ V_{DDEXT} = Maximum, V_{IN} = V_{DD} Maximum			10.0	µA
I_{OZL}[4]	Three-State Leakage Current[5]	@ V_{DDEXT} = Maximum, V_{IN} = 0 V			10.0	µA
C_{IN}	Input Capacitance[6]	f_{IN} = 1 MHz, $T_{AMBIENT}$ = 25°C, V_{IN} = 2.5 V		4	8[7]	pF
$I_{DDHIBERNATE}$	V_{DDINT} Current in Hibernate Mode	V_{DDEXT} = 3.65 V with voltage regulator off (V_{DDINT} = 0 V)		50		µA
$I_{DDDEEPSLEEP}$[8]	V_{DDINT} Current in Deep Sleep Mode	V_{DDINT} = 0.8 V, $T_{JUNCTION}$ = 25°C		7.5		mA
$I_{DDSLEEP}$	V_{DDINT} Current in Sleep Mode	V_{DDINT} = 0.8 V, $T_{JUNCTION}$ = 25°C		10		mA
I_{DD_TYP}[8, 9]	V_{DDINT} Current Dissipation (Typical)	V_{DDINT} = 0.8 V, f_{IN} = 50 MHz, $T_{JUNCTION}$ = 25°C		20		mA
I_{DD_TYP}[8, 9]	V_{DDINT} Current Dissipation (Typical)	V_{DDINT} = 1.14 V, f_{IN} = 400 MHz, $T_{JUNCTION}$ = 25°C		132		mA
I_{DDRTC}	V_{DDRTC} Current	V_{DDRTC} = 3.3 V, $T_{JUNCTION}$ = 25°C		20		µA

[1] Applies to output and bidirectional pins.
[2] Applies to input pins except JTAG inputs.
[3] Applies to JTAG input pins (TCK, TDI, TMS, $\overline{\text{TRST}}$).
[4] Absolute value.
[5] Applies to three-statable pins.
[6] Applies to all signal pins.
[7] Guaranteed, but not tested.
[8] See Power Dissipation on Page 45.
[9] Processor executing 75% dual MAC, 25% ADD with moderate data bus activity.

ABSOLUTE MAXIMUM RATINGS

Stresses greater than those listed in the table may cause permanent damage to the device. These are stress ratings only. Functional operation of the device at these or any other conditions greater than those indicated in the operational sections of this specification is not implied. Exposure to absolute maximum rating conditions for extended periods may affect device reliability.

Parameter	Rating
Internal (Core) Supply Voltage (V_{DDINT})	−0.3 V to +1.4 V
External (I/O) Supply Voltage (V_{DDEXT})	−0.5 V to +3.8 V
Input Voltage[1]	−0.5 V to +3.8 V
Output Voltage Swing	−0.5 V to V_{DDEXT}+0.5 V
Load Capacitance	200 pF
Storage Temperature Range	−65°C to +150°C
Junction Temperature Under Bias	125°C

[1] Applies to 100% transient duty cycle. For other duty cycles see Table 10.

Table 10. Maximum Duty Cycle for Input Transient Voltage[1]

V_{IN} Min (V)	V_{IN} Max (V)	Maximum Duty Cycle
−0.50	+3.80	100%
−0.70	+4.00	40%
−0.80	+4.10	25%
−0.90	+4.20	15%
−1.00	+4.30	10%

[1] Applies to all signal pins with the exception of CLKIN, XTAL, VROUT1–0.

ESD SENSITIVITY

CAUTION

ESD (electrostatic discharge) sensitive device. Electrostatic charges as high as 4000 V readily accumulate on the human body and test equipment and can discharge without detection. Although the ADSP-BF531/ADSP-BF532 processor features proprietary ESD protection circuitry, permanent damage may occur on devices subjected to high energy electrostatic discharges. Therefore, proper ESD precautions are recommended to avoid performance degradation or loss of functionality.

PACKAGE INFORMATION

The information presented in Figure 9 and Table 11 provides information about how to read the package brand and relate it to specific product features. For a complete listing of product offerings, see the Ordering Guide on Page 60.

Figure 9. Product Information on Package

Table 11. Package Brand Information

Brand Key	Field Description
t	Temperature Range
pp	Package Type
Z	Lead Free Option (Optional)
ccc	See Ordering Guide
vvvvvv.x	Assembly Lot Code
n.n	Silicon Revision
yyww	Date Code

TIMING SPECIFICATIONS

Table 12 through Table 14 describe the timing requirements for the ADSP-BF531/ADSP-BF532 processor clocks. Take care in selecting MSEL, SSEL, and CSEL ratios so as not to exceed the maximum core clock and system clock as described in Absolute Maximum Ratings on Page 22, and the voltage controlled oscillator (VCO) operating frequencies described in Table 13. Table 13 describes phase-locked loop operating conditions.

Table 12. Core Clock Requirements

Parameter		$T_{JUNCTION}$ = 125°C Min	$T_{JUNCTION}$ = 125°C Max	All[1] Other $T_{JUNCTION}$ Min	All[1] Other $T_{JUNCTION}$ Max	Unit
t_{CCLK}	Core Cycle Period (V_{DDINT} = 1.14 V minimum)	2.50		2.50		ns
t_{CCLK}	Core Cycle Period (V_{DDINT} = 1.045 V minimum)	3.00		2.75		ns
t_{CCLK}	Core Cycle Period (V_{DDINT} = 0.95 V minimum)	3.39		3.00		ns
t_{CCLK}	Core Cycle Period (V_{DDINT} = 0.85 V minimum)			3.57		ns
t_{CCLK}	Core Cycle Period (V_{DDINT} = 0.8 V)			4.00		ns

[1] See Operating Conditions on Page 20.

Table 13. Phase-Locked Loop Operating Conditions

Parameter		Min	Max	Unit
f_{VCO}	Voltage Controlled Oscillator (VCO) Frequency	50	Maximum f_{CCLK}	MHz

Table 14. Maximum SCLK Conditions

Parameter[1]		V_{DDEXT} = 1.8 V	V_{DDEXT} = 2.5 V	V_{DDEXT} = 3.3 V	Unit
MBGA/PBGA					
f_{SCLK}	CLKOUT/SCLK Frequency ($V_{DDINT} \geq$ 1.14 V)	100	133	133	MHz
f_{SCLK}	CLKOUT/SCLK Frequency (V_{DDINT} < 1.14 V)	100	100	100	MHz
LQFP					
f_{SCLK}	CLKOUT/SCLK Frequency ($V_{DDINT} \geq$ 1.14 V)	100	133	133	MHz
f_{SCLK}	CLKOUT/SCLK Frequency (V_{DDINT} < 1.14 V)	83	83	83	MHz

[1] t_{SCLK} (= $1/f_{SCLK}$) must be greater than or equal to t_{CCLK}.

Clock and Reset Timing

Table 15 and Figure 10 describe clock and reset operations. Per Absolute Maximum Ratings on Page 22, combinations of CLKIN and clock multipliers must not select core/peripheral clocks in excess of 400 MHz/133 MHz.

Table 15. Clock and Reset Timing

Parameter		Min	Max	Unit
Timing Requirements				
t_{CKIN}	CLKIN Period	25.0	100.0[1]	ns
t_{CKINL}	CLKIN Low Pulse[2]	10.0		ns
t_{CKINH}	CLKIN High Pulse[1]	10.0		ns
t_{WRST}	$\overline{\text{RESET}}$ Asserted Pulse Width Low[3]	11 t_{CKIN}		ns

[1] If DF bit in PLL_CTL register is set, then the maximum t_{CKIN} period is 50 ns.
[2] Applies to bypass mode and nonbypass mode.
[3] Applies after power-up sequence is complete. At power-up, the processor's internal phase-locked loop requires no more than 2,000 CLKIN cycles, while $\overline{\text{RESET}}$ is asserted, assuming stable power supplies and CLKIN (not including start-up time of external clock oscillator).

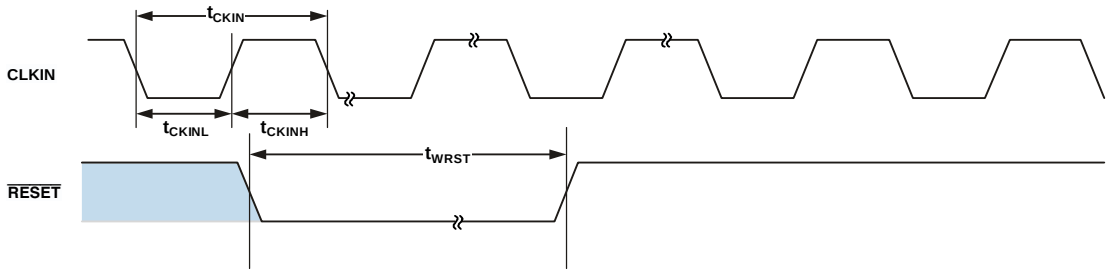

Figure 10. Clock and Reset Timing

Asynchronous Memory Read Cycle Timing

Table 16. Asynchronous Memory Read Cycle Timing

Parameter		V_{DDEXT} = 1.8 V Min	V_{DDEXT} = 1.8 V Max	V_{DDEXT} = 2.5 V/3.3 V Min	V_{DDEXT} = 2.5 V/3.3 V Max	Unit
Timing Requirements						
t_{SDAT}	DATA15–0 Setup Before CLKOUT	2.1		2.1		ns
t_{HDAT}	DATA15–0 Hold After CLKOUT	1.0		0.8		ns
t_{SARDY}	ARDY Setup Before CLKOUT	4.0		4.0		ns
t_{HARDY}	ARDY Hold After CLKOUT	1.0		0.0		ns
Switching Characteristics						
t_{DO}	Output Delay After CLKOUT[1]		6.0		6.0	ns
t_{HO}	Output Hold After CLKOUT [1]	1.0		0.8		ns

[1] Output pins include $\overline{AMS3–0}$, $\overline{ABE1–0}$, ADDR19–1, $\overline{AOE}$, $\overline{ARE}$.

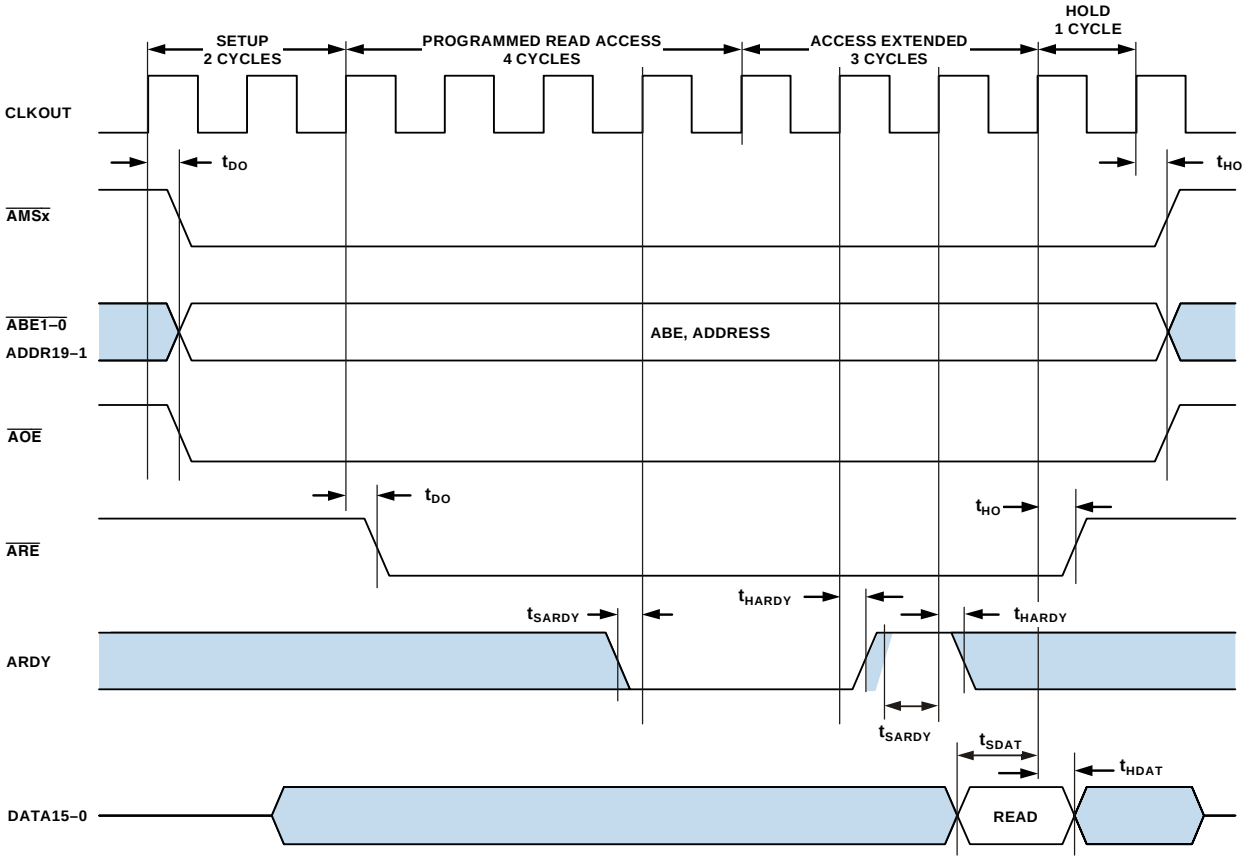

Figure 11. Asynchronous Memory Read Cycle Timing

Asynchronous Memory Write Cycle Timing

Table 17. Asynchronous Memory Write Cycle Timing

Parameter		V_{DDEXT} = 1.8 V Min	V_{DDEXT} = 1.8 V Max	V_{DDEXT} = 2.5 V/3.3 V Min	V_{DDEXT} = 2.5 V/3.3 V Max	Unit
Timing Requirements						
t_{SARDY}	ARDY Setup Before CLKOUT	4.0		4.0		ns
t_{HARDY}	ARDY Hold After CLKOUT	1.0		0.0		ns
Switching Characteristics						
t_{DDAT}	DATA15–0 Disable After CLKOUT		6.0		6.0	ns
t_{ENDAT}	DATA15–0 Enable After CLKOUT	1.0		1.0		ns
t_{DO}	Output Delay After CLKOUT[1]		6.0		6.0	ns
t_{HO}	Output Hold After CLKOUT [1]	1.0		0.8		ns

[1] Output pins include $\overline{AMS3–0}$, $\overline{ABE1–0}$, ADDR19–1, DATA15–0, $\overline{AOE}$, $\overline{AWE}$.

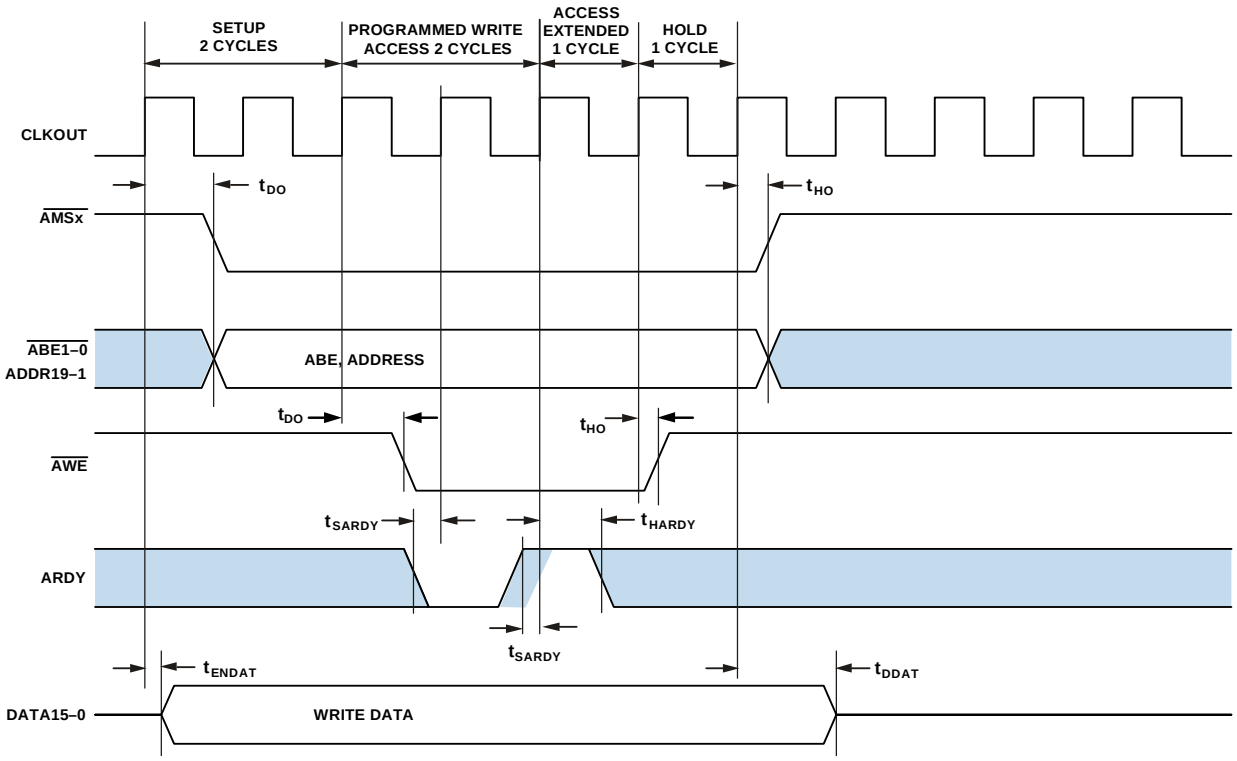

Figure 12. Asynchronous Memory Write Cycle Timing

SDRAM Interface Timing

Table 18. SDRAM Interface Timing[1]

Parameter		V_{DDEXT} = 1.8 V Min	V_{DDEXT} = 1.8 V Max	V_{DDEXT} = 2.5 V/3.3 V Min	V_{DDEXT} = 2.5 V/3.3 V Max	Unit
Timing Requirements						
t_{SSDAT}	DATA Setup Before CLKOUT	2.1		1.5		ns
t_{HSDAT}	DATA Hold After CLKOUT	0.0		0.8		ns
Switching Characteristics						
t_{SCLK}	CLKOUT Period[2]	10.0		7.5		ns
t_{SCLKH}	CLKOUT Width High	2.5		2.5		ns
t_{SCLKL}	CLKOUT Width Low	2.5		2.5		ns
t_{DCAD}	Command, ADDR, Data Delay After CLKOUT[3]		6.0		4.0	ns
t_{HCAD}	Command, ADDR, Data Hold After CLKOUT[1]	1.0		1.0		ns
t_{DSDAT}	Data Disable After CLKOUT		6.0		4.0	ns
t_{ENSDAT}	Data Enable After CLKOUT	1.0		1.0		ns

[1] SDRAM timing for $T_{JUNCTION}$ = 125°C is limited to 100 MHz.
[2] Refer to Table 14 on Page 23 for maximum f_{SCLK} at various V_{DDINT}.
[3] Command pins include: $\overline{SRAS}$, $\overline{SCAS}$, $\overline{SWE}$, SDQM, $\overline{SMS}$, SA10, SCKE.

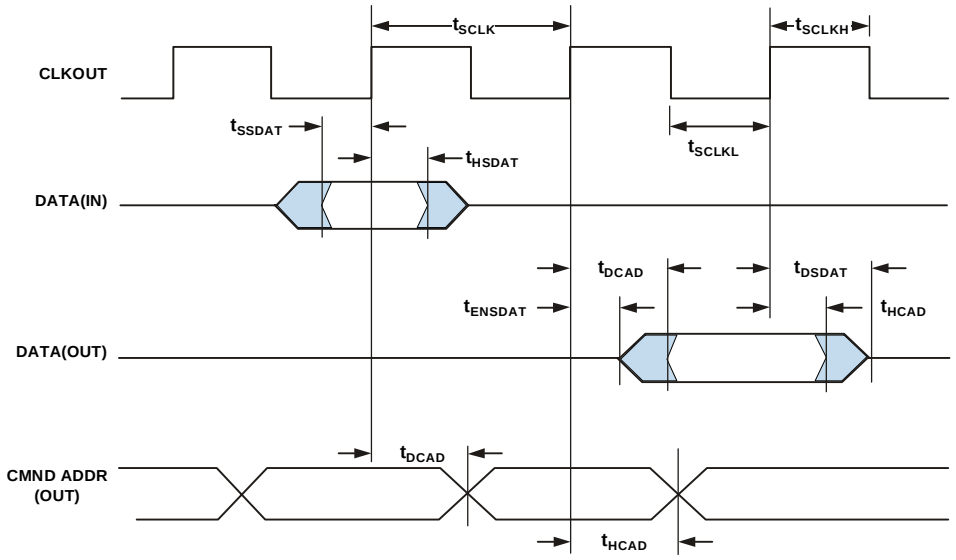

NOTE: COMMAND = $\overline{SRAS}$, $\overline{SCAS}$, $\overline{SWE}$, SDQM, $\overline{SMS}$, SA10, SCKE.

Figure 13. SDRAM Interface Timing

External Port Bus Request and Grant Cycle Timing

Table 19 and Figure 14 describe external port bus request and bus grant operations.

Table 19. External Port Bus Request and Grant Cycle Timing

Parameter		V_{DDEXT} = 1.8 V Min	V_{DDEXT} = 1.8 V Max	V_{DDEXT} = 2.5 V/3.3 V Min	V_{DDEXT} = 2.5 V/3.3 V Max	Unit
Timing Requirements						
t_{BS}	$\overline{BR}$ Asserted to CLKOUT High Setup	4.6		4.6		ns
t_{BH}	CLKOUT High to $\overline{BR}$ Deasserted Hold Time	1.0		0.0		ns
Switching Characteristics						
t_{SD}	CLKOUT Low to $\overline{xMS}$, Address, and $\overline{RD}$/$\overline{WR}$ Disable		4.5		4.5	ns
t_{SE}	CLKOUT Low to $\overline{xMS}$, Address, and $\overline{RD}$/$\overline{WR}$ Enable		4.5		4.5	ns
t_{DBG}	CLKOUT High to $\overline{BG}$ High Setup		4.6		3.6	ns
t_{EBG}	CLKOUT High to $\overline{BG}$ Deasserted Hold Time		4.6		3.6	ns
t_{DBH}	CLKOUT High to $\overline{BGH}$ High Setup		4.6		3.6	ns
t_{EBH}	CLKOUT High to $\overline{BGH}$ Deasserted Hold Time		4.6		3.6	ns

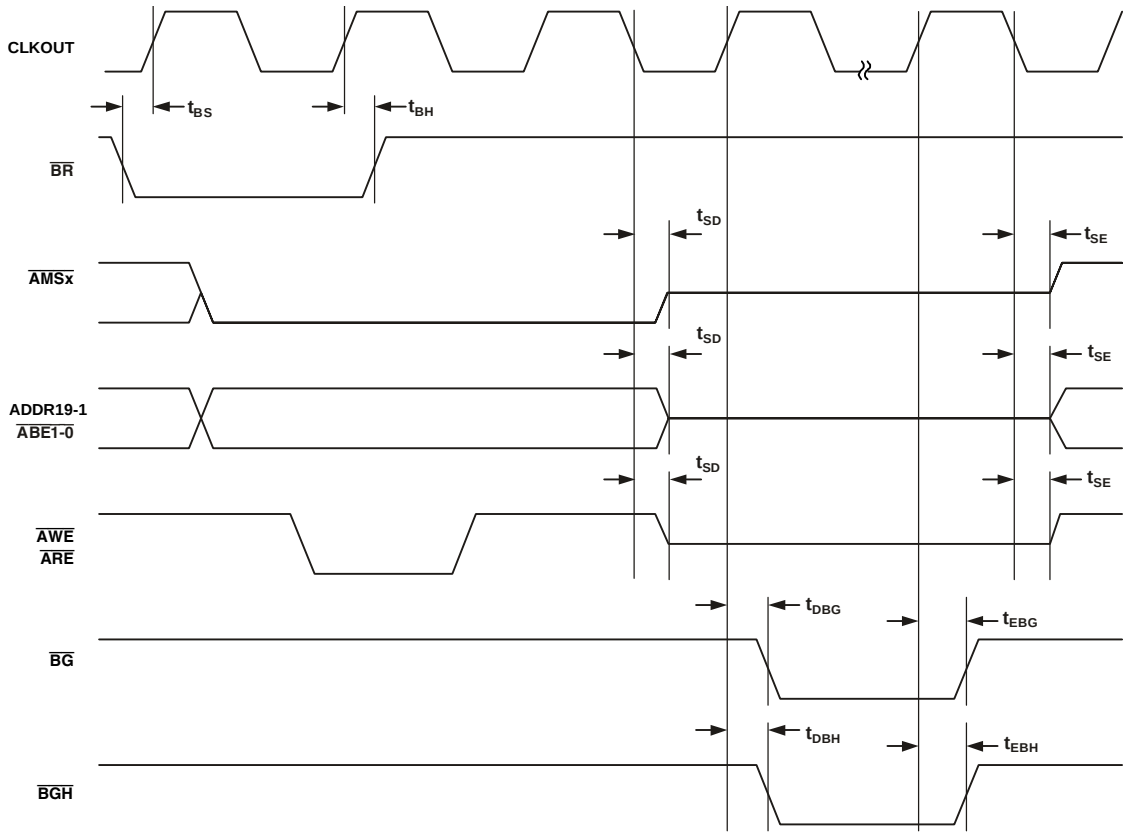

Figure 14. External Port Bus Request and Grant Cycle Timing

Parallel Peripheral Interface Timing

Table 20 and Figure 15 on Page 29 describe parallel peripheral interface operations.

Table 20. Parallel Peripheral Interface Timing

Parameter		V_{DDEXT} = 1.8 V Min	V_{DDEXT} = 1.8 V Max	V_{DDEXT} = 2.5 V/3.3 V Min	V_{DDEXT} = 2.5 V/3.3 V Max	Unit
Timing Requirements						
t_{PCLKW}	PPI_CLK Width	6.0		6.0		ns
t_{PCLK}	PPI_CLK Period[1]	15.0		15.0		ns
t_{SFSPE}	External Frame Sync Setup Before PPI_CLK Edge (Nonsampling Edge for Rx, Sampling Edge for Tx)	6.0		4.0		ns
t_{HFSPE}	External Frame Sync Hold After PPI_CLK	1.0		1.0		ns
t_{SDRPE}	Receive Data Setup Before PPI_CLK	3.5		3.5		ns
t_{HDRPE}	Receive Data Hold After PPI_CLK	1.5		1.5		ns
Switching Characteristics—GP Output and Frame Capture Modes						
t_{DFSPE}	Internal Frame Sync Delay After PPI_CLK		8.0		8.0	ns
t_{HOFSPE}	Internal Frame Sync Hold After PPI_CLK	1.7		1.7		ns
t_{DDTPE}	Transmit Data Delay After PPI_CLK		9.0		9.0	ns
t_{HDTPE}	Transmit Data Hold After PPI_CLK	1.8		1.8		ns

[1] PPI_CLK frequency cannot exceed $f_{SCLK}/2$

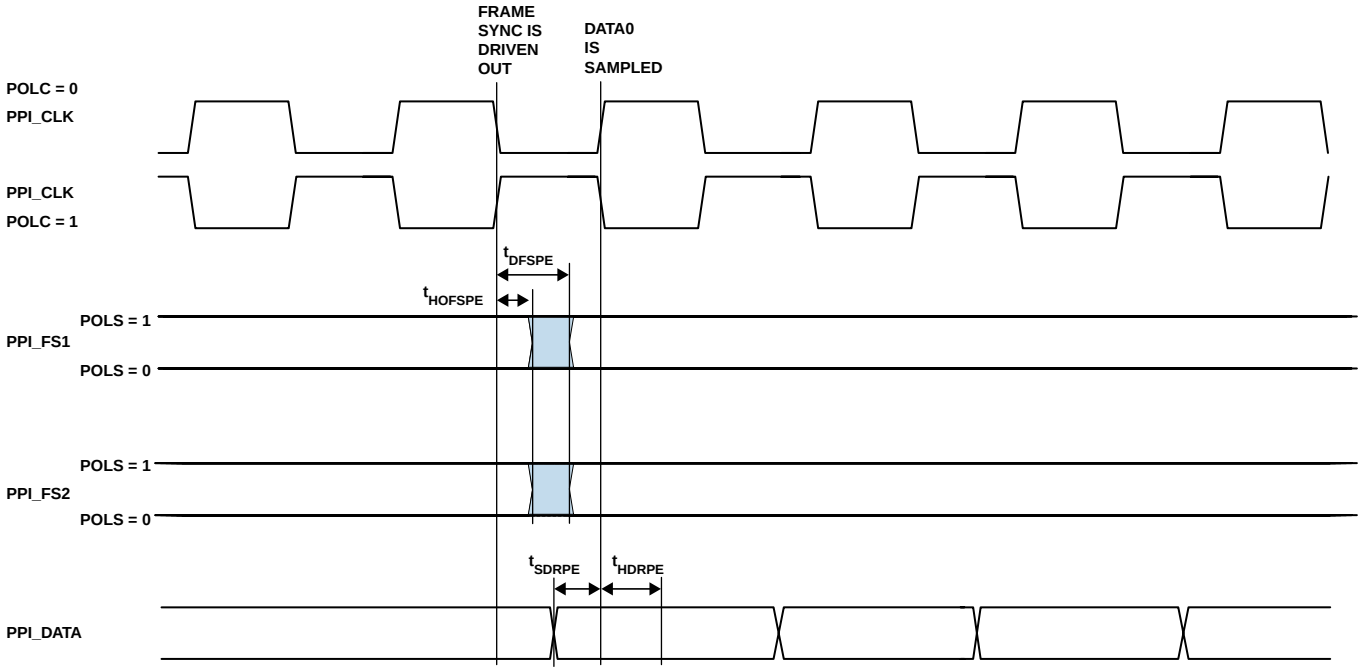

Figure 15. PPI GP Rx Mode with Internal Frame Sync Timing

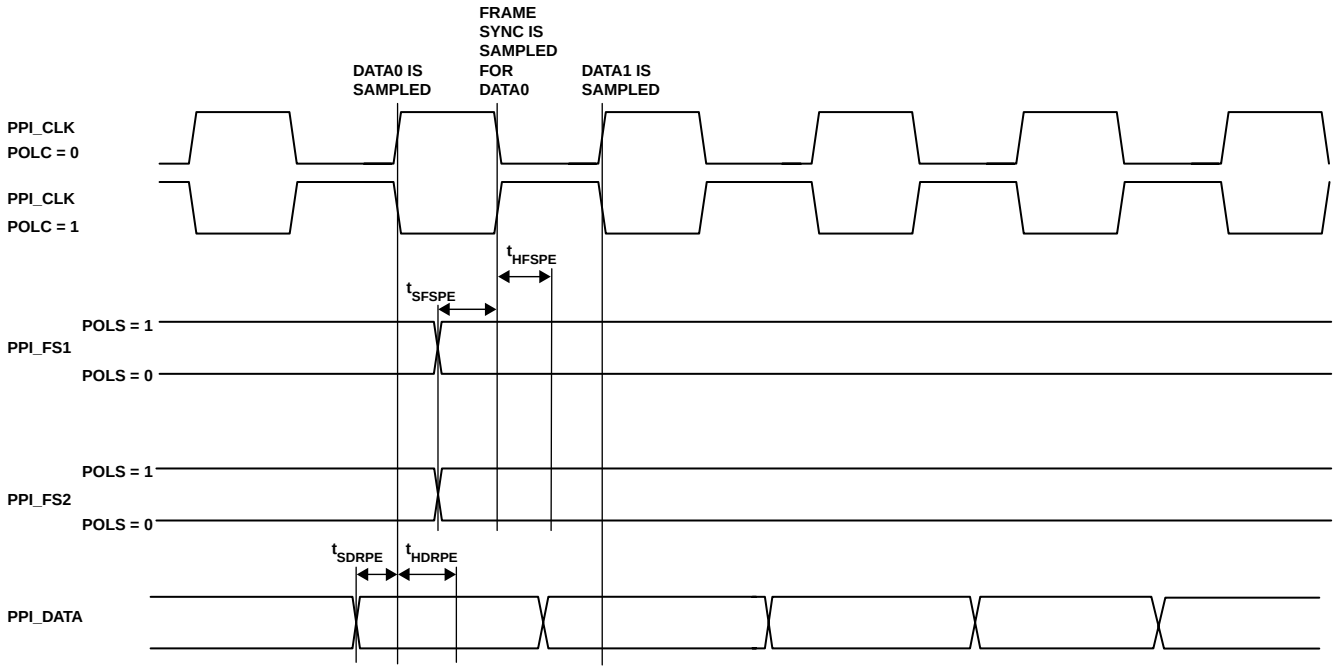

Figure 16. PPI GP Rx Mode with External Frame Sync Timing

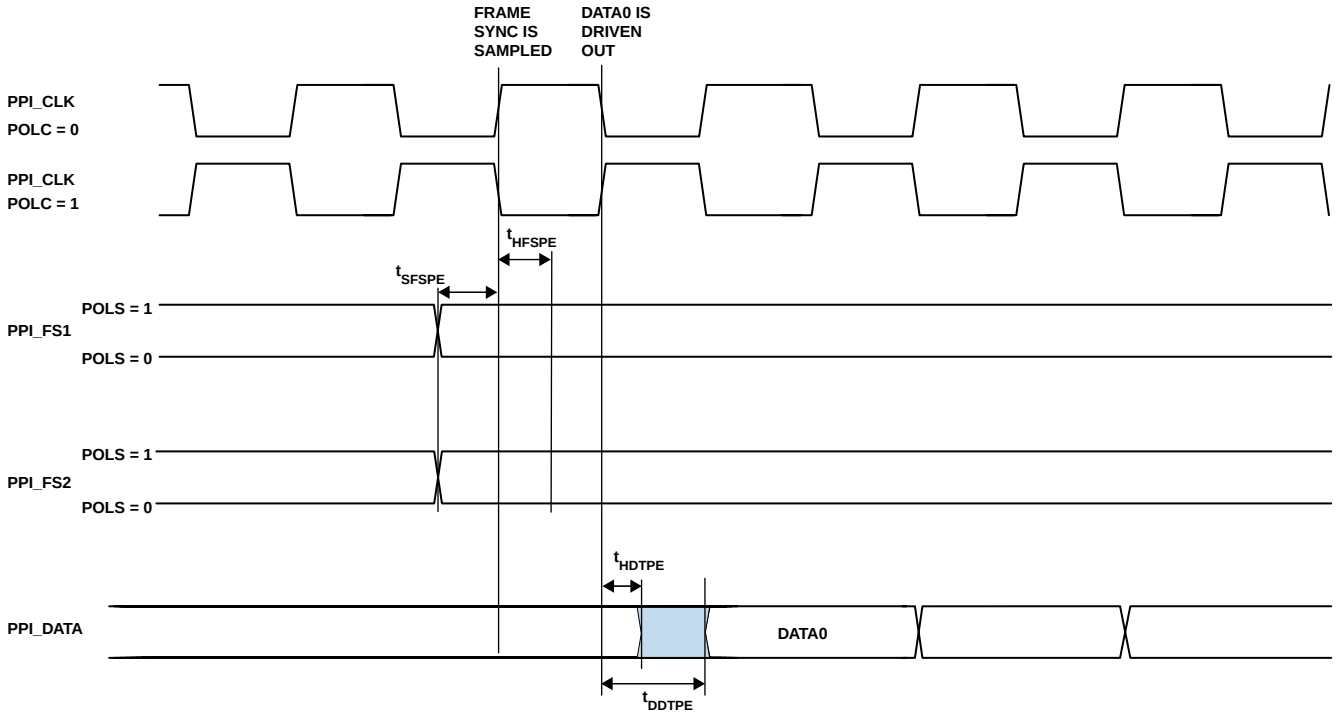

Figure 17. PPI GP Tx Mode with External Frame Sync Timing

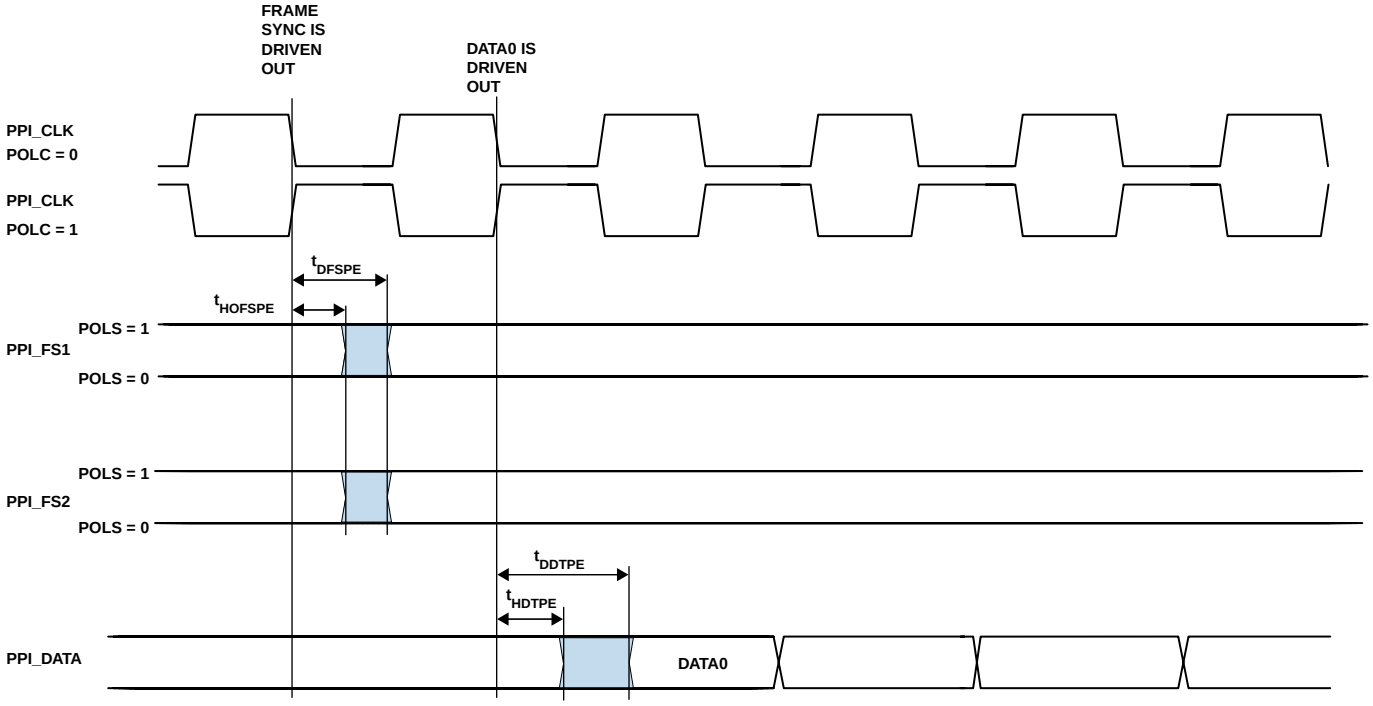

Figure 18. PPI GP Tx Mode with Internal Frame Sync Timing

Serial Ports

Table 21 on Page 32 through Table 24 on Page 33 and Figure 19 on Page 34 through Figure 21 on Page 36 describe Serial Port operations.

Table 21. Serial Ports—External Clock

Parameter		V_{DDEXT} = 1.8 V Min	V_{DDEXT} = 1.8 V Max	V_{DDEXT} = 2.5 V/3.3 V Min	V_{DDEXT} = 2.5 V/3.3 V Max	Unit
Timing Requirements						
t_{SFSE}	TFS/RFS Setup Before TSCLK/RSCLK[1]	3.0		3.0		ns
t_{HFSE}	TFS/RFS Hold After TSCLK/RSCLK[1]	3.0		3.0		ns
t_{SDRE}	Receive Data Setup Before RSCLK[1]	3.0		3.0		ns
t_{HDRE}	Receive Data Hold After RSCLK[1]	3.0		3.0		ns
t_{SCLKEW}	TSCLK/RSCLK Width	4.5		4.5		ns
t_{SCLKE}	TSCLK/RSCLK Period	15.0		15.0		ns
Switching Characteristics						
t_{DFSE}	TFS/RFS Delay After TSCLK/RSCLK (Internally Generated TFS/RFS)[2]		10.0		10.0	ns
t_{HOFSE}	TFS/RFS Hold After TSCLK/RSCLK (Internally Generated TFS/RFS)[1]	0.0		0.0		ns
t_{DDTE}	Transmit Data Delay After TSCLK[1]		10.0		10.0	ns
t_{HDTE}	Transmit Data Hold After TSCLK[1]	0.0		0.0		ns

[1] Referenced to sample edge.
[2] Referenced to drive edge.

Table 22. Serial Ports—Internal Clock

Parameter		V_{DDEXT} = 1.8 V Min	V_{DDEXT} = 1.8 V Max	V_{DDEXT} = 2.5 V/3.3 V Min	V_{DDEXT} = 2.5 V/3.3 V Max	Unit
Timing Requirements						
t_{SFSI}	TFS/RFS Setup Before TSCLK/RSCLK[1]	11.0		9.0		ns
t_{HFSI}	TFS/RFS Hold After TSCLK/RSCLK[1]	–2.0		–2.0		ns
t_{SDRI}	Receive Data Setup Before RSCLK[1]	9.0		9.0		ns
t_{HDRI}	Receive Data Hold After RSCLK[1]	0.0		0.0		ns
t_{SCLKEW}	TSCLK/RSCLK Width	4.5		4.5		ns
t_{SCLKE}	TSCLK/RSCLK Period	15.0		15.0		ns
Switching Characteristics						
t_{DFSI}	TFS/RFS Delay After TSCLK/RSCLK (Internally Generated TFS/RFS)[2]		3.0		3.0	ns
t_{HOFSI}	TFS/RFS Hold After TSCLK/RSCLK (Internally Generated TFS/RFS)[1]	–1.0		–1.0		ns
t_{DDTI}	Transmit Data Delay After TSCLK[1]		3.0		3.0	ns
t_{HDTI}	Transmit Data Hold After TSCLK[1]	–2.0		–2.0		ns
t_{SCLKIW}	TSCLK/RSCLK Width	4.5		4.5		ns

[1] Referenced to sample edge.
[2] Referenced to drive edge.

Table 23. Serial Ports—Enable and Three-State

Parameter		V_{DDEXT} = 1.8 V Min	V_{DDEXT} = 1.8 V Max	V_{DDEXT} = 2.5 V/3.3 V Min	V_{DDEXT} = 2.5 V/3.3 V Max	Unit
Switching Characteristics						
t_{DTENE}	Data Enable Delay from External TSCLK[1]	0		0		ns
t_{DDTTE}	Data Disable Delay from External TSCLK[1]		10.0		10.0	ns
t_{DTENI}	Data Enable Delay from Internal TSCLK[1]	−2.0		−2.0		ns
t_{DDTTI}	Data Disable Delay from Internal TSCLK[1]		3.0		3.0	ns

[1] Referenced to drive edge.

Table 24. External Late Frame Sync

Parameter		V_{DDEXT} = 1.8 V Min	V_{DDEXT} = 1.8 V Max	V_{DDEXT} = 2.5 V/3.3 V Min	V_{DDEXT} = 2.5 V/3.3 V Max	Unit
Switching Characteristics						
$t_{DDTLFSE}$	Data Delay from Late External TFS or External RFS with MCE = 1, MFD = 0[1, 2]		10.0		10.0	ns
$t_{DTENLFS}$	Data Enable from Late FS or MCE = 1, MFD = 0[1,2]	0		0		ns

[1] MCE = 1, TFS enable and TFS valid follow $t_{DTENLFS}$ and $t_{DDTLFSE}$.
[2] If external RFS/TFS setup to RSCLK/TSCLK > $t_{SCLKE}/2$, then $t_{DDTE/I}$ and $t_{DTENE/I}$ apply; otherwise $t_{DDTLFSE}$ and $t_{DTENLFS}$ apply.

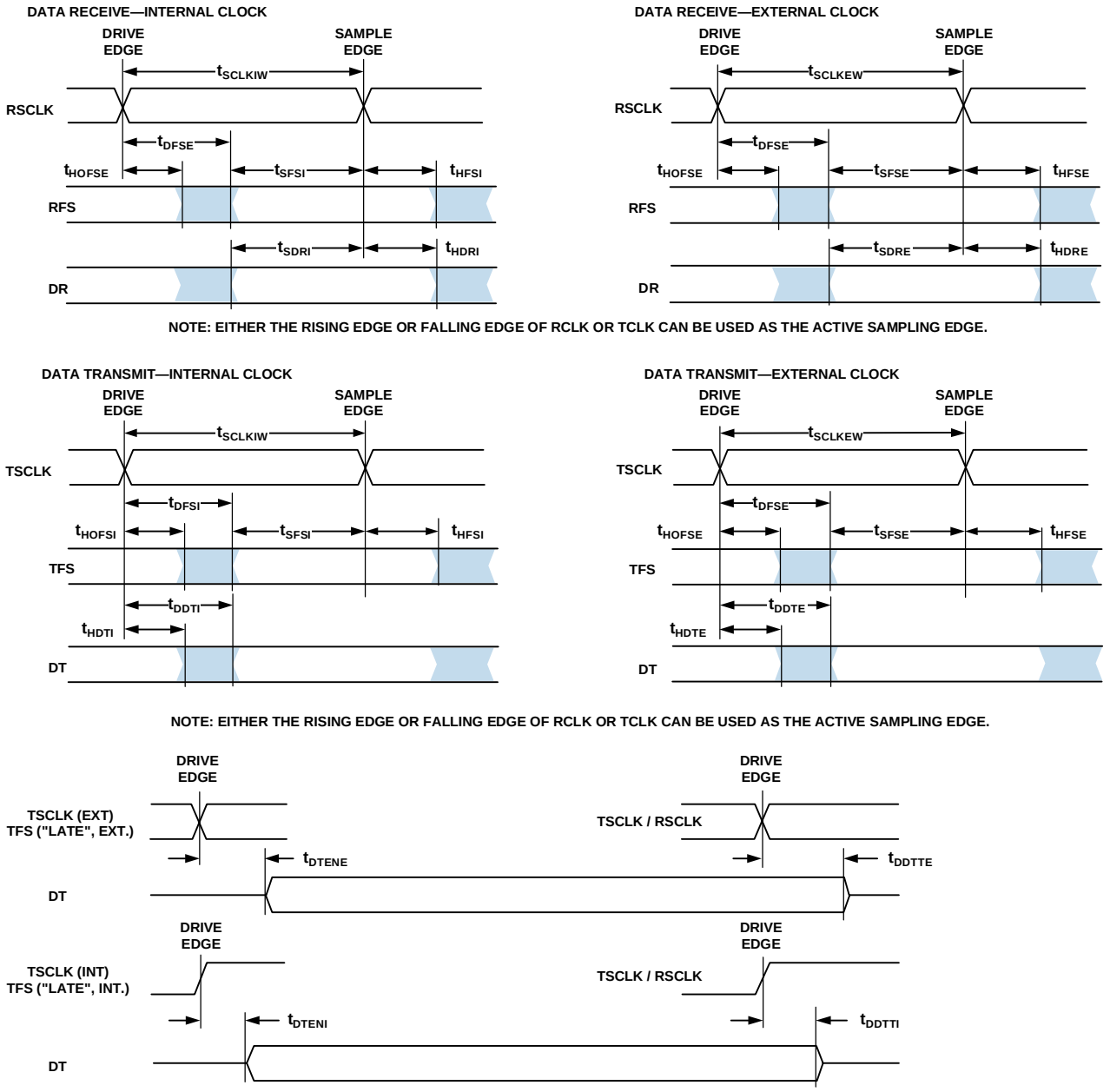

Figure 19. Serial Ports

EXTERNAL RFS WITH MCE = 1, MFD = 0

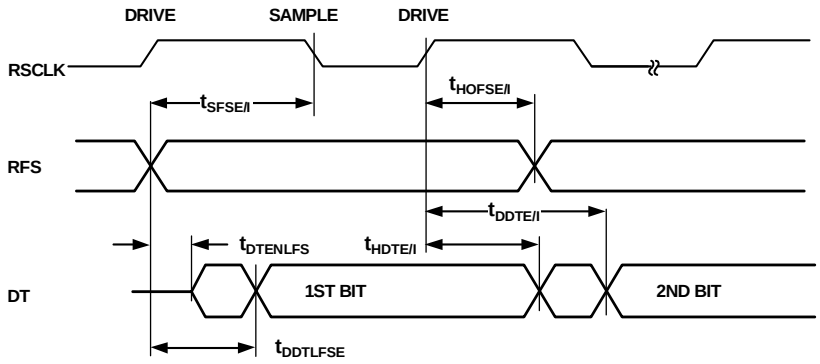

LATE EXTERNAL TFS

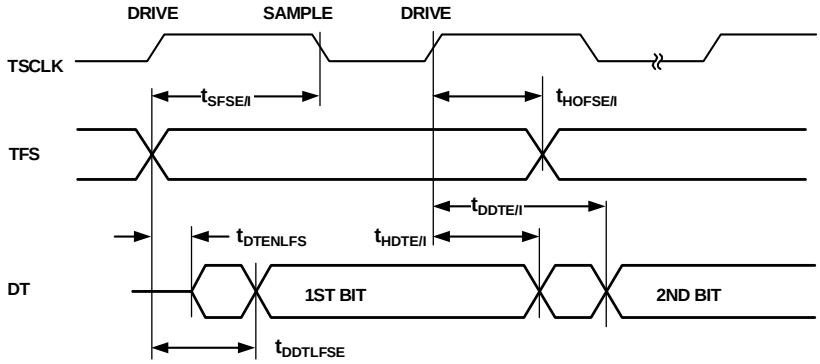

Figure 20. External Late Frame Sync (Frame Sync Setup < t_{SCLKE}/2)

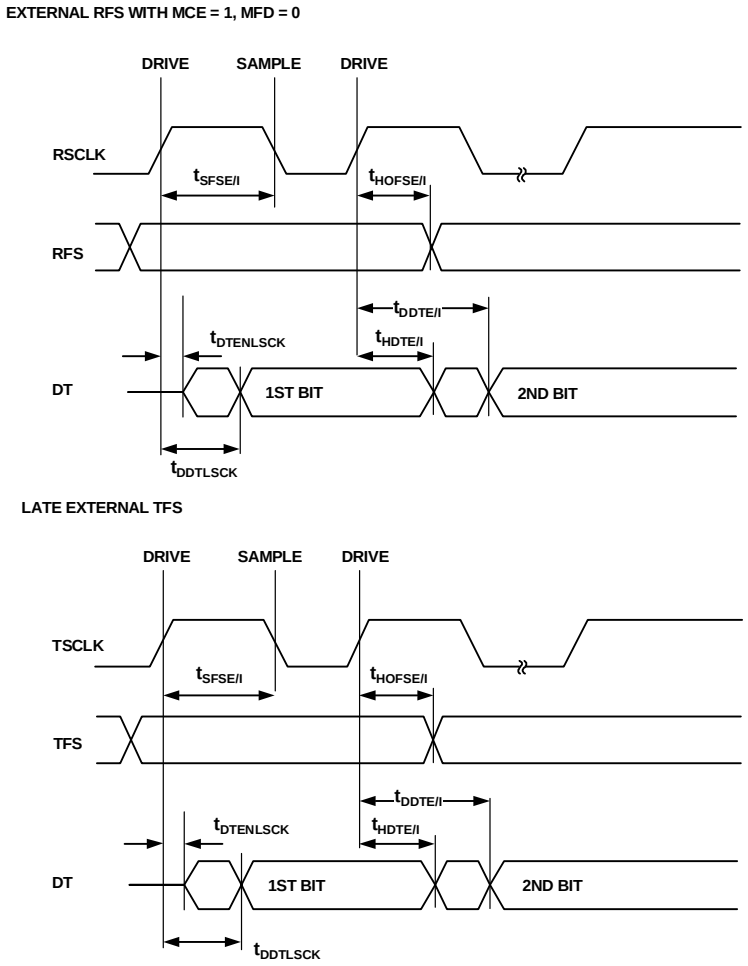

Figure 21. External Late Frame Sync (Frame Sync Setup > $t_{SCLKE}/2$)

Serial Peripheral Interface (SPI) Port —Master Timing

Table 25 and Figure 22 describe SPI port master operations.

Table 25. Serial Peripheral Interface (SPI) Port—Master Timing

Parameter		V_{DDEXT} = 1.8 V Min	Max	V_{DDEXT} = 2.5 V/3.3 V Min	Max	Unit
Timing Requirements						
t_{SSPIDM}	Data Input Valid to SCK Edge (Data Input Setup)	8.5		7.5		ns
t_{HSPIDM}	SCK Sampling Edge to Data Input Invalid	–1.5		–1.5		ns
Switching Characteristics						
t_{SDSCIM}	$\overline{SPISELx}$ Low to First SCK Edge (x=0 or x=1)	$2t_{SCLK}$ –1.5		$2t_{SCLK}$ –1.5		ns
t_{SPICHM}	Serial Clock High Period	$2t_{SCLK}$ – 1.5		$2t_{SCLK}$ – 1.5		ns
t_{SPICLM}	Serial Clock Low Period	$2t_{SCLK}$ – 1.5		$2t_{SCLK}$ – 1.5		ns
t_{SPICLK}	Serial Clock Period	$4t_{SCLK}$ – 1.5		$4t_{SCLK}$ – 1.5		ns
t_{HDSM}	Last SCK Edge to $\overline{SPISELx}$ High (x=0 or x=1)	$2t_{SCLK}$ – 1.5		$2t_{SCLK}$ – 1.5		ns
t_{SPITDM}	Sequential Transfer Delay	$2t_{SCLK}$ – 1.5		$2t_{SCLK}$ – 1.5		ns
$t_{DDSPIDM}$	SCK Edge to Data Out Valid (Data Out Delay)	0	6	0	6	ns
$t_{HDSPIDM}$	SCK Edge to Data Out Invalid (Data Out Hold)	–1.0	+4.0	–1.0	+4.0	ns

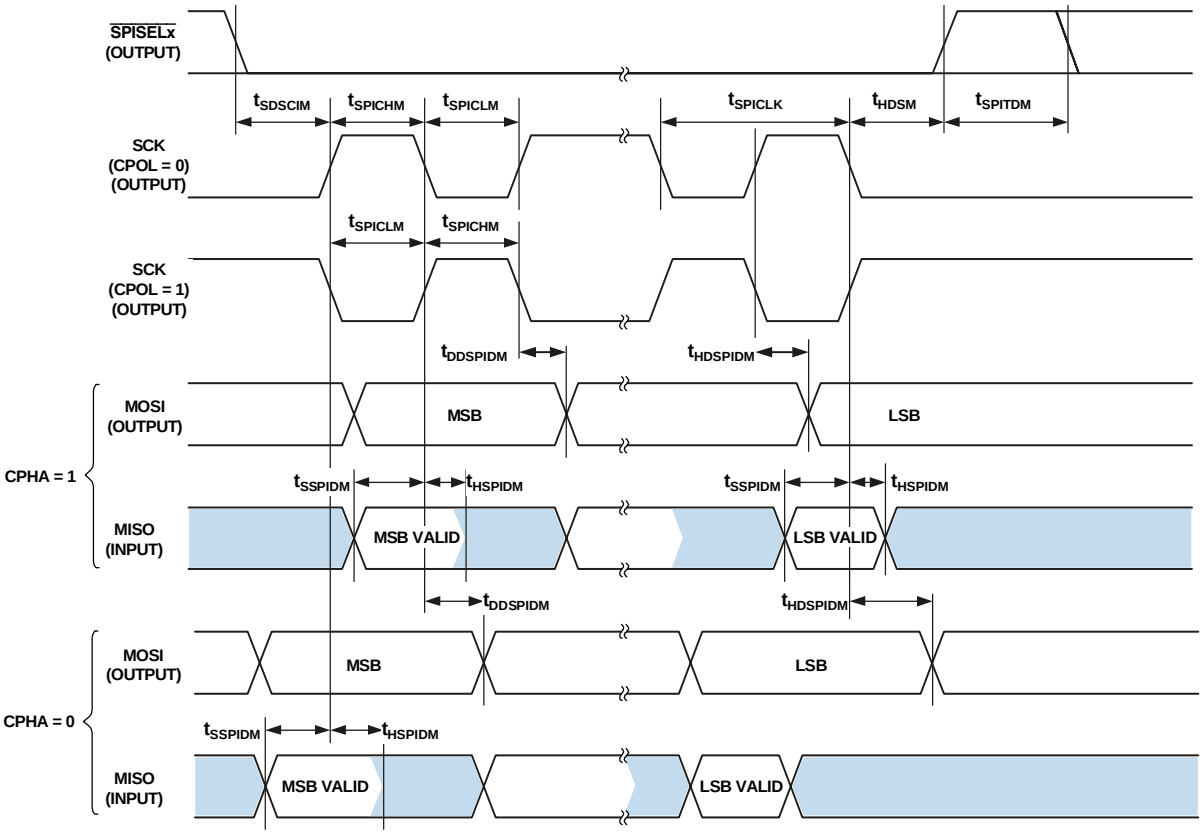

Figure 22. Serial Peripheral Interface (SPI) Port—Master Timing

Serial Peripheral Interface (SPI) Port —Slave Timing

Table 26 and Figure 23 describe SPI port slave operations.

Table 26. Serial Peripheral Interface (SPI) Port—Slave Timing

Parameter		V_{DDEXT} = 1.8 V Min	V_{DDEXT} = 1.8 V Max	V_{DDEXT} = 2.5 V/3.3 V Min	V_{DDEXT} = 2.5 V/3.3 V Max	Unit
Timing Requirements						
t_{SPICHS}	Serial Clock High Period	$2t_{SCLK} - 1.5$		$2t_{SCLK} - 1.5$		ns
t_{SPICLS}	Serial Clock Low Period	$2t_{SCLK} - 1.5$		$2t_{SCLK} - 1.5$		ns
t_{SPICLK}	Serial Clock Period	$4t_{SCLK} - 1.5$		$4t_{SCLK} - 1.5$		ns
t_{HDS}	Last SCK Edge to $\overline{SPISS}$ Not Asserted	$2t_{SCLK} - 1.5$		$2t_{SCLK} - 1.5$		ns
t_{SPITDS}	Sequential Transfer Delay	$2t_{SCLK} - 1.5$		$2t_{SCLK} - 1.5$		ns
t_{SDSCI}	$\overline{SPISS}$ Assertion to First SCK Edge	$2t_{SCLK} - 1.5$		$2t_{SCLK} - 1.5$		ns
t_{SSPID}	Data Input Valid to SCK Edge (Data Input Setup)	1.6		1.6		ns
t_{HSPID}	SCK Sampling Edge to Data Input Invalid	1.6		1.6		ns
Switching Characteristics						
t_{DSOE}	$\overline{SPISS}$ Assertion to Data Out Active	0	9	0	8	ns
t_{DSDHI}	$\overline{SPISS}$ Deassertion to Data High Impedance	0	9	0	8	ns
t_{DDSPID}	SCK Edge to Data Out Valid (Data Out Delay)	0	10	0	10	ns
t_{HDSPID}	SCK Edge to Data Out Invalid (Data Out Hold)	0	10	0	10	ns

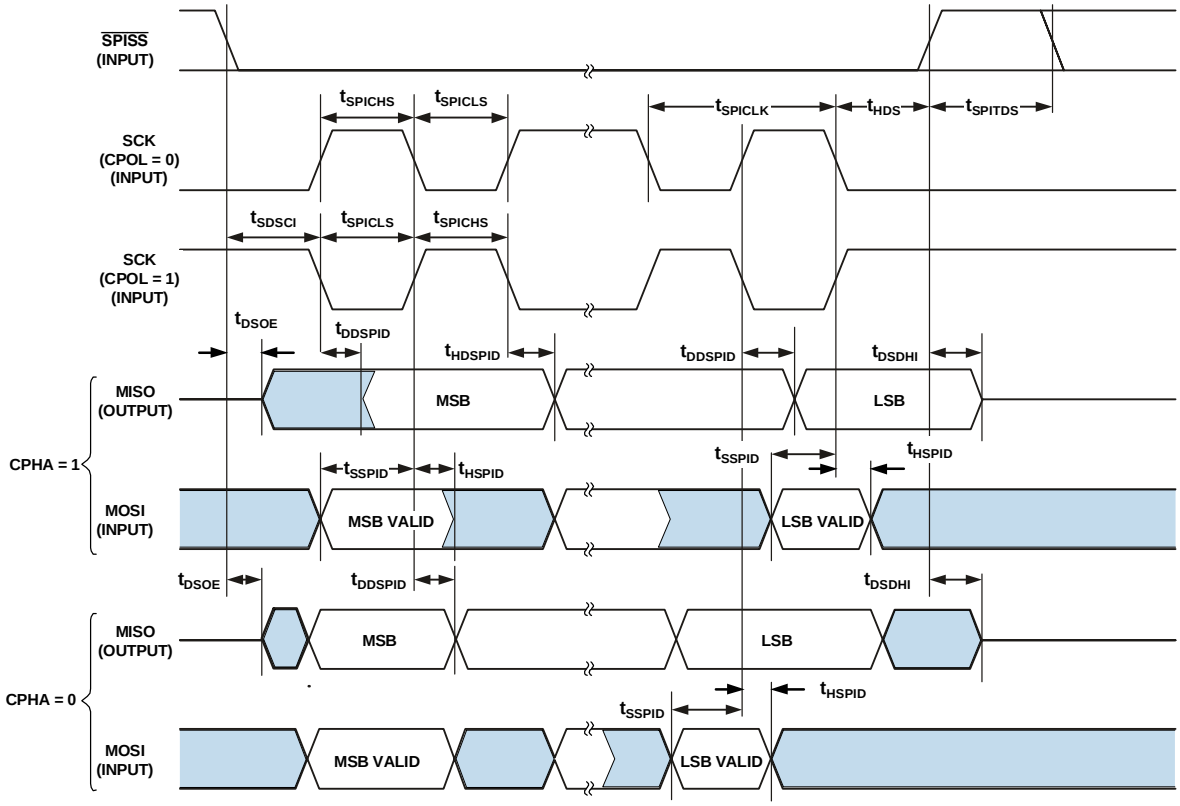

Figure 23. Serial Peripheral Interface (SPI) Port—Slave Timing

Universal Asynchronous Receiver-Transmitter (UART) Port—Receive and Transmit Timing

Figure 24 describes UART port receive and transmit operations. The maximum baud rate is SCLK/16. As shown in Figure 24 there is some latency between the generation internal UART interrupts and the external data operations. These latencies are negligible at the data transmission rates for the UART.

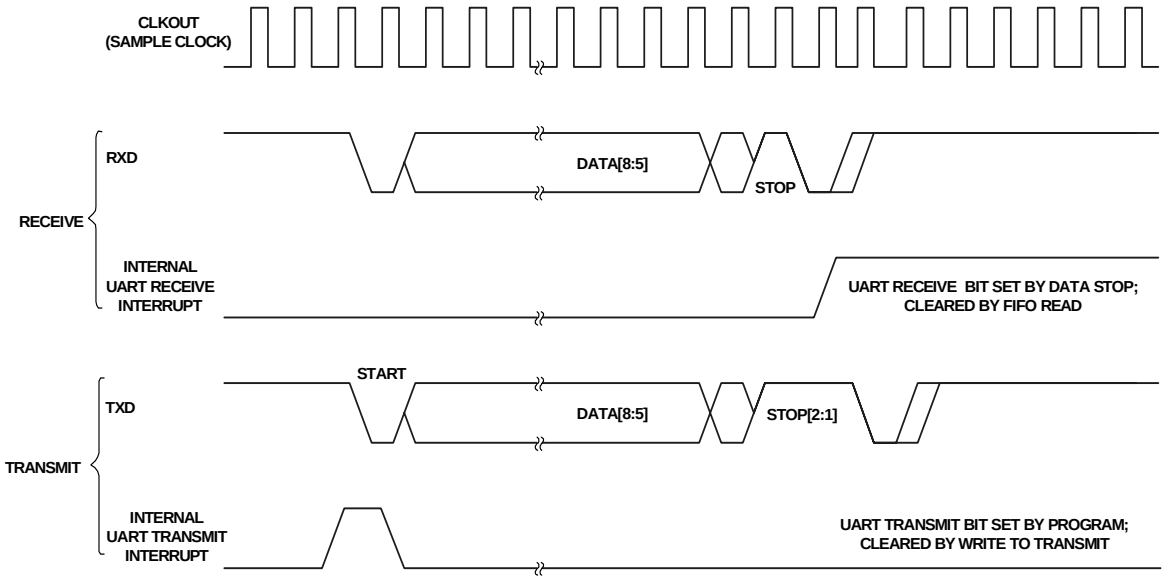

Figure 24. UART Port—Receive and Transmit Timing

Programmable Flags Cycle Timing

Table 27 and Figure 25 describe programmable flag operations.

Table 27. Programmable Flags Cycle Timing

Parameter		V_{DDEXT} = 1.8 V Min	V_{DDEXT} = 1.8 V Max	V_{DDEXT} = 2.5 V/3.3 V Min	V_{DDEXT} = 2.5 V/3.3 V Max	Unit
Timing Requirement						
t_{WFI}	Flag Input Pulse Width	t_{SCLK} + 1		t_{SCLK} + 1		ns
Switching Characteristic						
t_{DFO}	Flag Output Delay from CLKOUT Low		6		6	ns

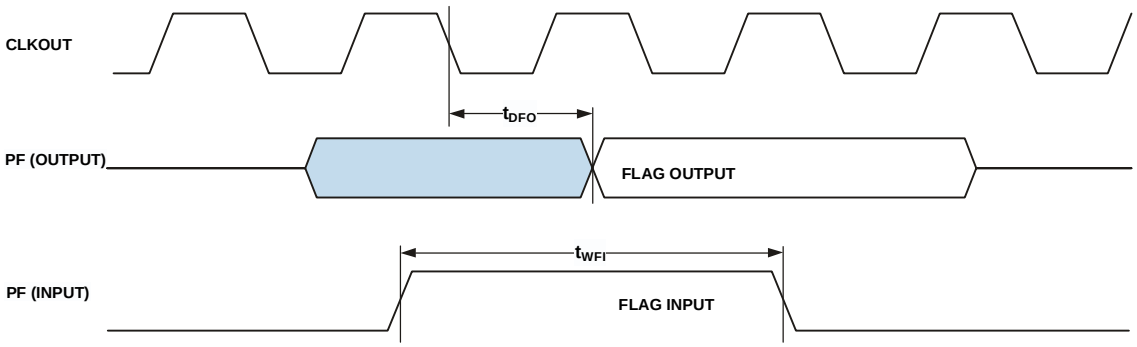

Figure 25. Programmable Flags Cycle Timing

Timer Cycle Timing

Table 28 and Figure 26 describe timer expired operations. The input signal is asynchronous in width capture mode and external clock mode and has an absolute maximum input frequency of $f_{SCLK}/2$ MHz.

Table 28. Timer Cycle Timing

Parameter		V_{DDEXT} = 1.8 V Min	V_{DDEXT} = 1.8 V Max	V_{DDEXT} = 2.5 V/3.3 V Min	V_{DDEXT} = 2.5 V/3.3 V Max	Unit
Timing Characteristics						
t_{WL}	Timer Pulse Width Input Low[1] (Measured in SCLK Cycles)	1		1		SCLK
t_{WH}	Timer Pulse Width Input High[1] (Measured in SCLK Cycles)	1		1		SCLK
Switching Characteristic						
t_{HTO}	Timer Pulse Width Output[2] (Measured in SCLK Cycles)	1	$(2^{32}-1)$	1	$(2^{32}-1)$	SCLK

[1] The minimum pulse widths apply for TMRx input pins in width capture and external clock modes. They also apply to the PF1 or PPI_CLK input pins in PWM output mode.
[2] The minimum time for t_{HTO} is one cycle, and the maximum time for t_{HTO} equals $(2^{32}-1)$ cycles.

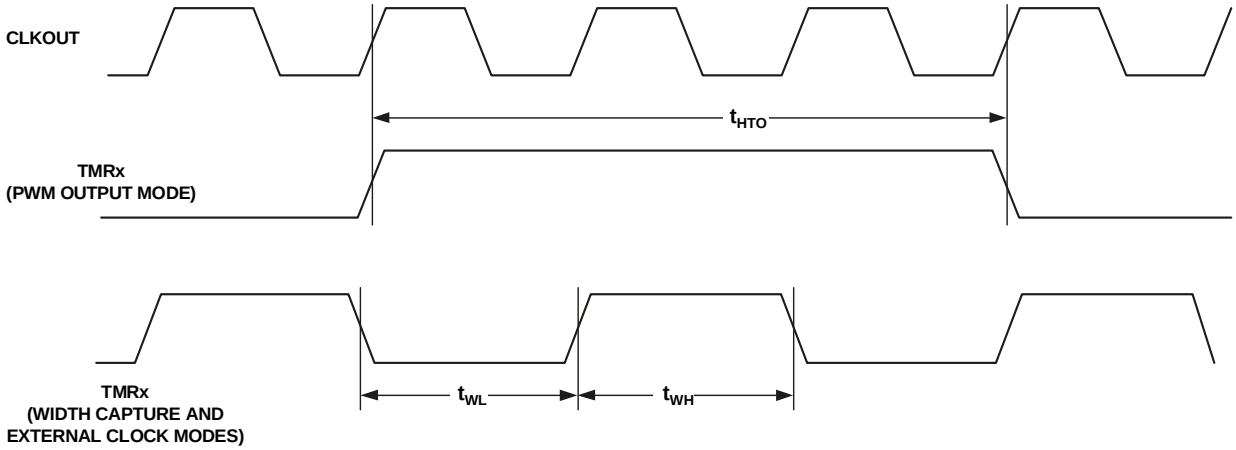

Figure 26. Timer PWM_OUT Cycle Timing

JTAG Test and Emulation Port Timing

Table 29 and Figure 27 describe JTAG port operations.

Table 29. JTAG Port Timing

Parameter		V_{DDEXT} = 1.8 V Min	V_{DDEXT} = 1.8 V Max	V_{DDEXT} = 2.5 V/3.3 V Min	V_{DDEXT} = 2.5 V/3.3 V Max	Unit
Timing Requirements						
t_{TCK}	TCK Period	20		20		ns
t_{STAP}	TDI, TMS Setup Before TCK High	4		4		ns
t_{HTAP}	TDI, TMS Hold After TCK High	4		4		ns
t_{SSYS}	System Inputs Setup Before TCK High[1]	4		4		ns
t_{HSYS}	System Inputs Hold After TCK High[1]	5		5		ns
t_{TRSTW}	$\overline{TRST}$ Pulse Width[2] (Measured in TCK Cycles)	4		4		TCK
Switching Characteristics						
t_{DTDO}	TDO Delay from TCK Low		10		10	ns
t_{DSYS}	System Outputs Delay After TCK Low[3]	0	12	0	12	ns

[1] System Inputs = DATA15–0, ARDY, TMR2–0, PF15–0, PPI_CLK, RSCLK0–1, RFS0–1, DR0PRI, DR0SEC, TSCLK0–1, TFS0–1, DR1PRI, DR1SEC, MOSI, MISO, SCK, RX, $\overline{RESET}$, NMI, BMODE1–0, $\overline{BR}$, PP3–0.

[2] 50 MHz maximum

[3] System Outputs = DATA15–0, ADDR19–1, $\overline{ABE1–0}$, $\overline{AOE}$, $\overline{ARE}$, $\overline{AWE}$, $\overline{AMS3–0}$, $\overline{SRAS}$, $\overline{SCAS}$, $\overline{SWE}$, SCKE, CLKOUT, SA10, $\overline{SMS}$, TMR2–0, PF15–0, RSCLK0–1, RFS0–1, TSCLK0–1, TFS0–1, DT0PRI, DT0SEC, DT1PRI, DT1SEC, MOSI, MISO, SCK, TX, $\overline{BG}$, $\overline{BGH}$, PPI3–0.

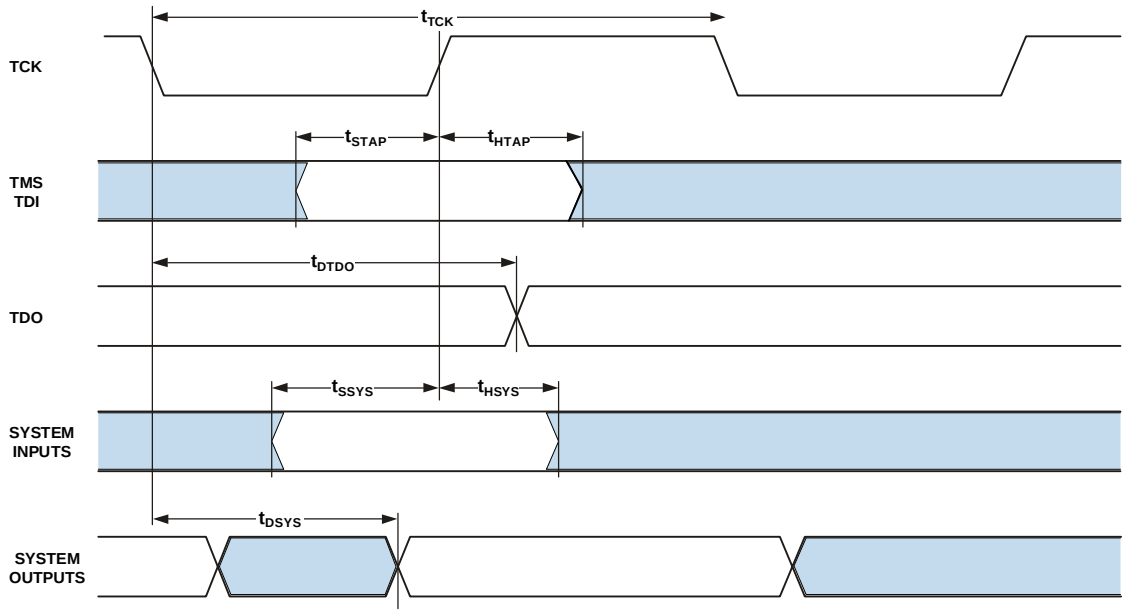

Figure 27. JTAG Port Timing

OUTPUT DRIVE CURRENTS

Figure 28 through Figure 39 show typical current-voltage characteristics for the output drivers of the ADSP-BF531/ADSP-BF532 processor. The curves represent the current drive capability of the output drivers as a function of output voltage.

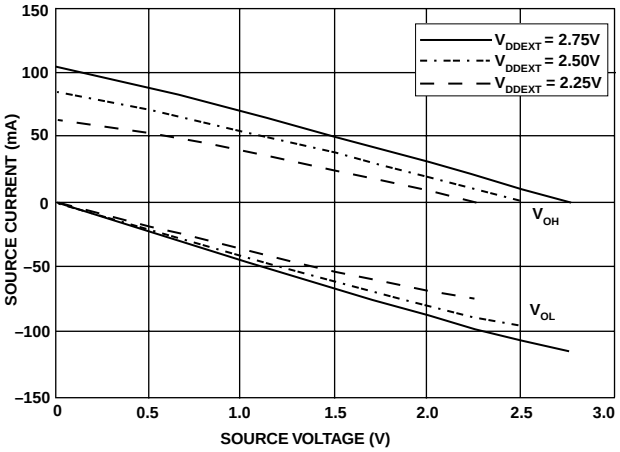

Figure 28. Drive Current A (V_{DDEXT} = 2.5 V)

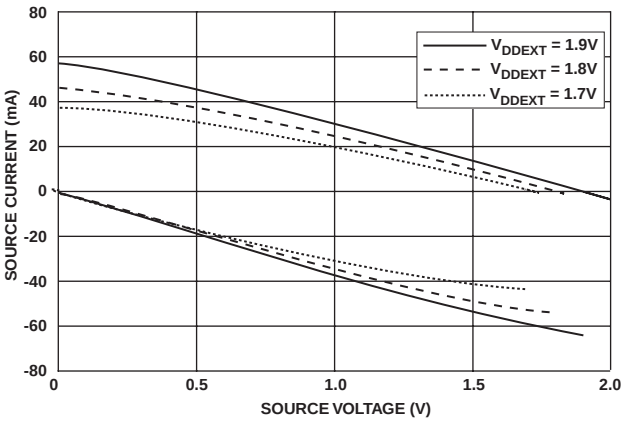

Figure 29. Drive Current A (V_{DDEXT} = 1.8 V)

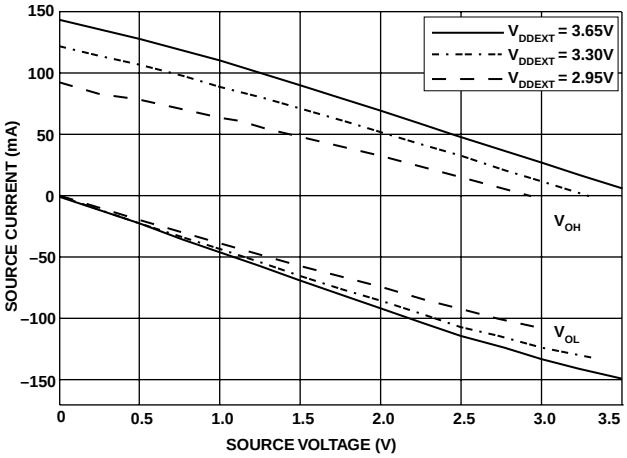

Figure 30. Drive Current A (V_{DDEXT} = 3.3 V)

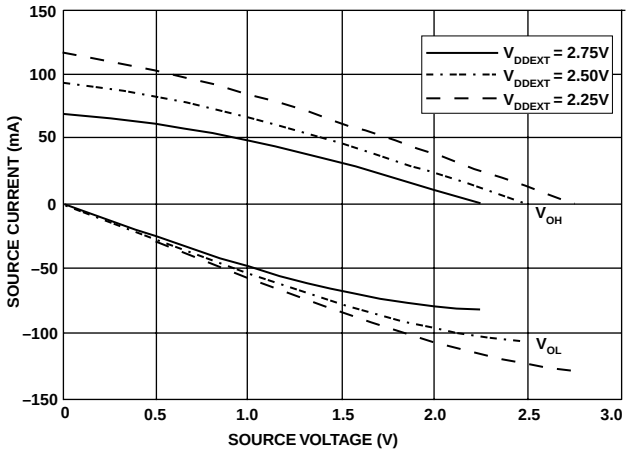

Figure 31. Drive Current B (V_{DDEXT} = 2.5 V)

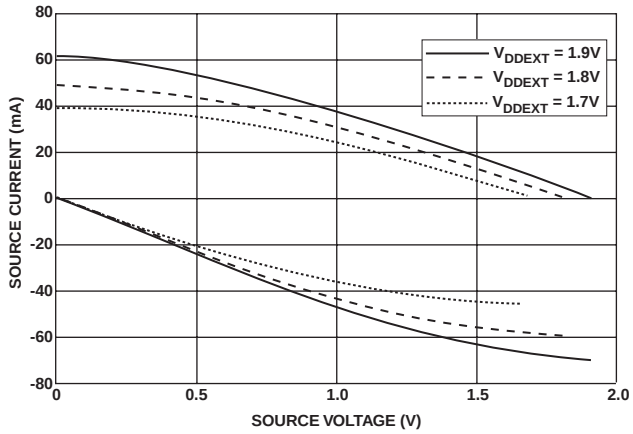

Figure 32. Drive Current B (V_{DDEXT} = 1.8 V)

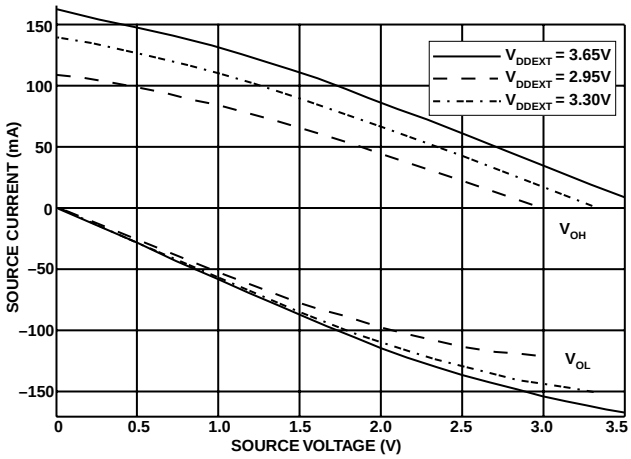

Figure 33. Drive Current B (V_{DDEXT} = 3.3 V)

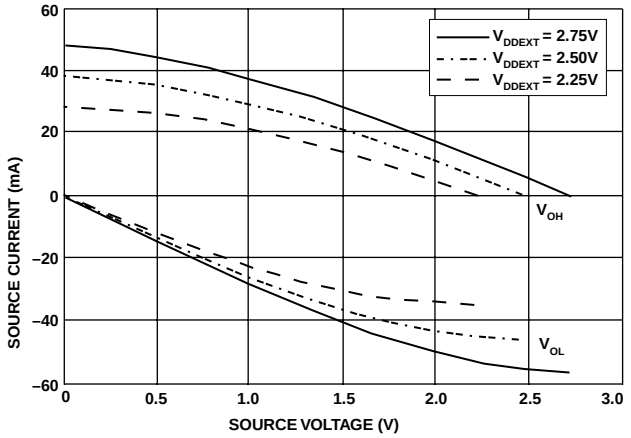

Figure 34. Drive Current C (V_{DDEXT} = 2.5 V)

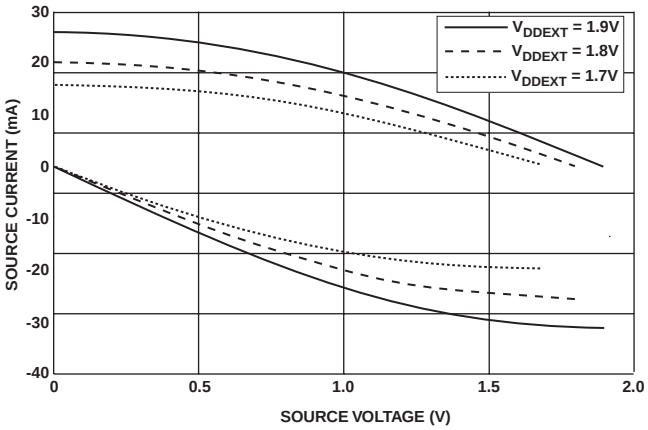

Figure 35. Drive Current C (V_{DDEXT} = 1.8 V)

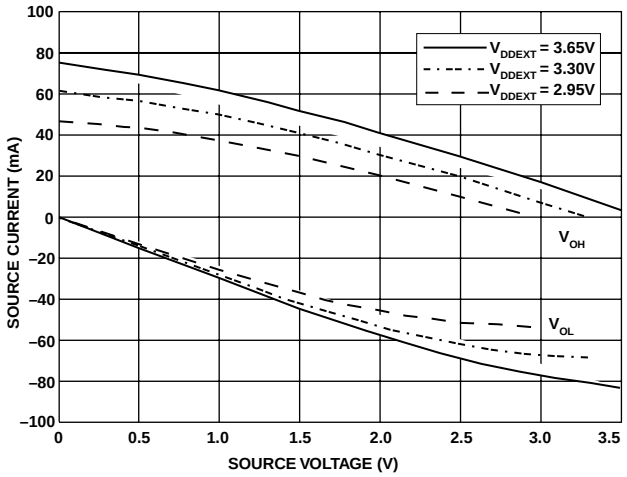

Figure 36. Drive Current C (V_{DDEXT} = 3.3 V)

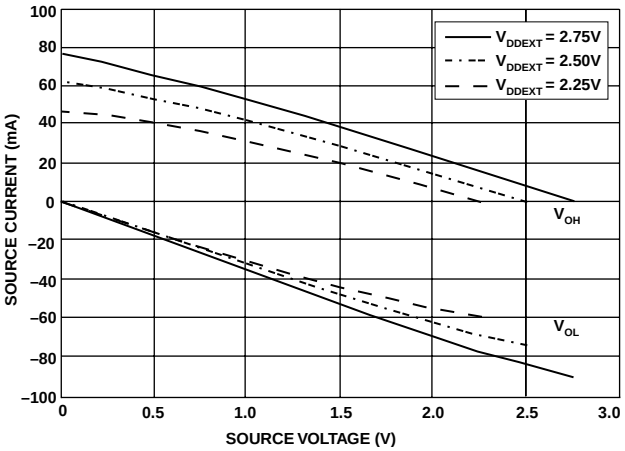

Figure 37. Drive Current D (V_{DDEXT} = 2.5 V)

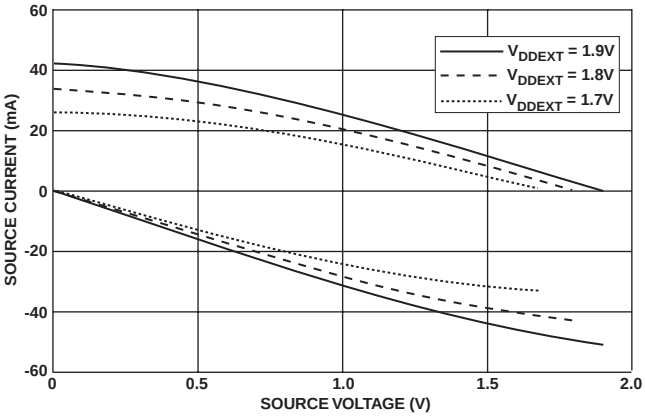

Figure 38. Drive Current D (V_{DDEXT} = 1.8 V)

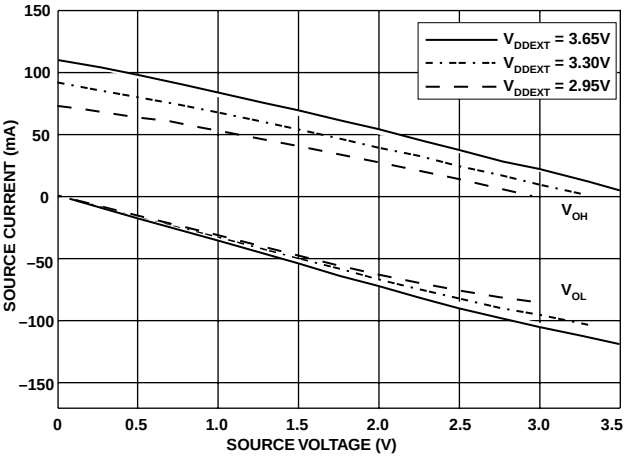

Figure 39. Drive Current D (V_{DDEXT} = 3.3 V)

POWER DISSIPATION

Many operating conditions can affect power dissipation. System designers should refer to *EE-229: Estimating Power for ADSP-BF531/ADSP-BF532/ADSP-BF533 Blackfin Processors* on the Analog Devices website (www.analog.com)—use site search on "EE-229." This document provides detailed information for optimizing your design for lowest power.

See the *ADSP-BF53x Blackfin Processor Hardware Reference Manual* for definitions of the various operating modes and for instructions on how to minimize system power.

TEST CONDITIONS

All timing parameters appearing in this data sheet were measured under the conditions described in this section. Figure 40 shows the measurement point for ac measurements (except output enable/disable). The measurement point V_{MEAS} is 0.95 V for V_{DDEXT} (nominal) = 1.8 V, and 1.5 V for V_{DDEXT} (nominal) = 2.5 V/3.3 V.

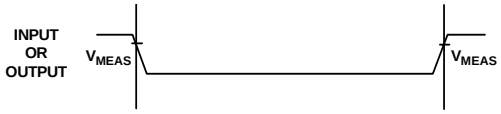

Figure 40. Voltage Reference Levels for AC Measurements (Except Output Enable/Disable)

Output Enable Time Measurement

Output pins are considered to be enabled when they have made a transition from a high impedance state to the point when they start driving.

The output enable time t_{ENA} is the interval from the point when a reference signal reaches a high or low voltage level to the point when the output starts driving as shown on the right side of Figure 41.

The time $t_{ENA_MEASURED}$ is the interval, from when the reference signal switches, to when the output voltage reaches V_{TRIP}(high) or V_{TRIP} (low). For V_{DDEXT} (nominal) = 1.8 V—V_{TRIP} (high) is 1.3 V and V_{TRIP} (low) is 0.7 V. For V_{DDEXT} (nominal) = 2.5 V/3.3 V—V_{TRIP} (high) is 2.0 V and V_{TRIP} (low) is 1.0 V . Time t_{TRIP} is the interval from when the output starts driving to when the output reaches the V_{TRIP} (high) or V_{TRIP} (low) trip voltage.

Time t_{ENA} is calculated as shown in the equation:

$$t_{ENA} = t_{ENA_MEASURED} - t_{TRIP}$$

If multiple pins (such as the data bus) are enabled, the measurement value is that of the first pin to start driving.

Output Disable Time Measurement

Output pins are considered to be disabled when they stop driving, go into a high impedance state, and start to decay from their output high or low voltage. The output disable time t_{DIS} is the difference between $t_{DIS_MEASURED}$ and t_{DECAY} as shown on the left side of Figure 40.

$$t_{DIS} = t_{DIS_MEASURED} - t_{DECAY}$$

The time for the voltage on the bus to decay by ΔV is dependent on the capacitive load C_L and the load current I_L. This decay time can be approximated by the equation:

$$t_{DECAY} = (C_L \Delta V)/I_L$$

The time t_{DECAY} is calculated with test loads C_L and I_L, and with ΔV equal to 0.1 V for V_{DDEXT} (nominal) = 1.8 V or 0.5 V for V_{DDEXT} (nominal) = 2.5 V/3.3 V.

The time $t_{DIS_MEASURED}$ is the interval from when the reference signal switches, to when the output voltage decays ΔV from the measured output high or output low voltage.

Example System Hold Time Calculation

To determine the data output hold time in a particular system, first calculate t_{DECAY} using the equation given above. Choose ΔV to be the difference between the ADSP-BF531/ADSP-BF532 processor's output voltage and the input threshold for the device requiring the hold time. C_L is the total bus capacitance (per data line), and I_L is the total leakage or three-state current (per data line). The hold time will be t_{DECAY} plus the various output disable times as specified in the Timing Specifications on Page 23 (for example t_{DSDAT} for an SDRAM write cycle as shown in SDRAM Interface Timing on Page 27).

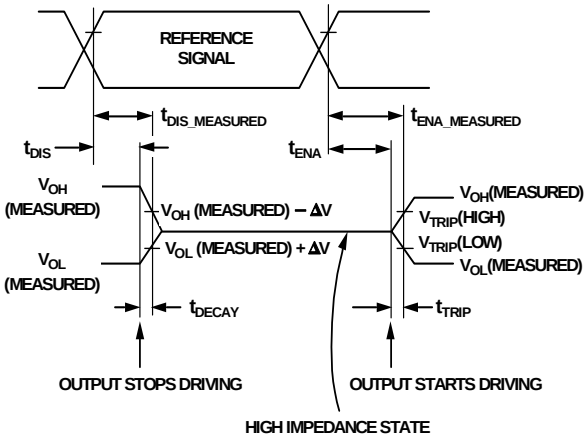

Figure 41. Output Enable/Disable

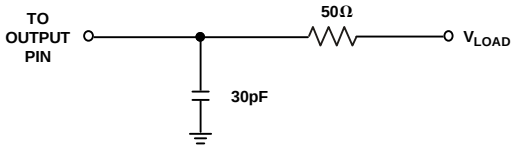

Figure 42. Equivalent Device Loading for AC Measurements (Includes All Fixtures)

Capacitive Loading

Output delays and holds are based on standard capacitive loads: 30 pF on all pins (see Figure 42). V_{LOAD} is 0.95 V for V_{DDEXT} (nominal) = 1.8 V, and 1.5 V for V_{DDEXT} (nominal) = 2.5 V/3.3 V. Figure 43 on Page 46 through Figure 54 on Page 48 show how output rise time varies with capacitance. The delay

and hold specifications given should be derated by a factor derived from these figures. The graphs in these figures may not be linear outside the ranges shown.

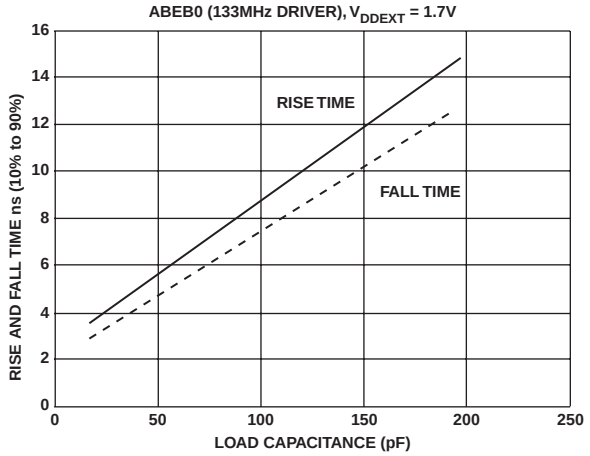

Figure 43. Typical Rise and Fall Times (10% to 90%) versus Load Capacitance for Driver A at V_{DDEXT} = 1.8 V

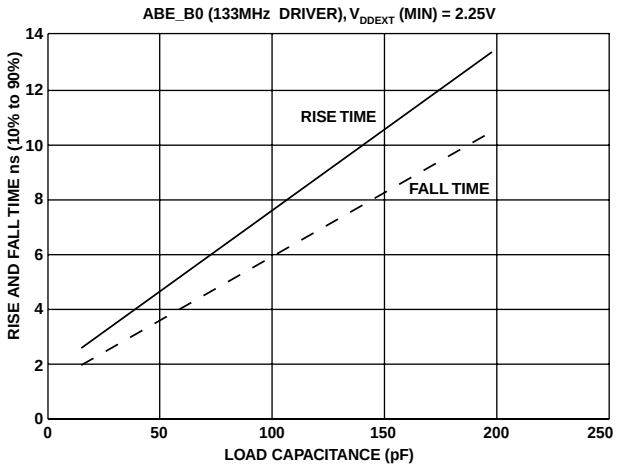

Figure 44. Typical Rise and Fall Times (10% to 90%) versus Load Capacitance for Driver A at V_{DDEXT} = 2.25 V

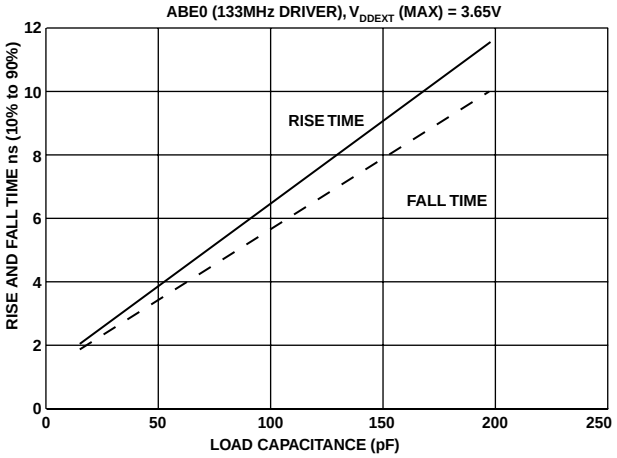

Figure 45. Typical Rise and Fall Times (10% to 90%) versus Load Capacitance for Driver A at V_{DDEXT} = 3.65 V

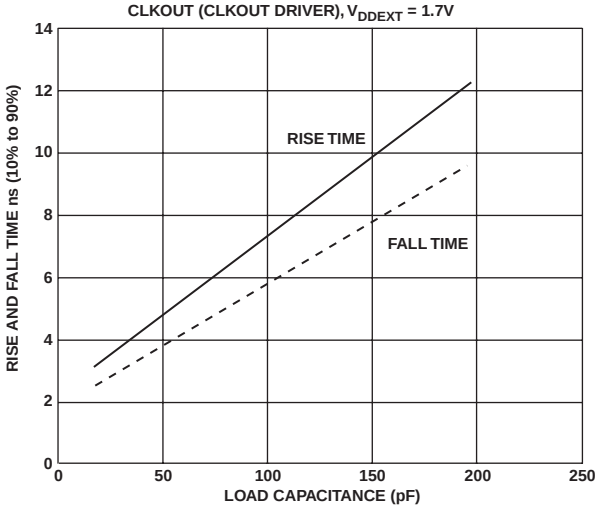

Figure 46. Typical Rise and Fall Times (10% to 90%) versus Load Capacitance for Driver B at V_{DDEXT} = 1.8 V

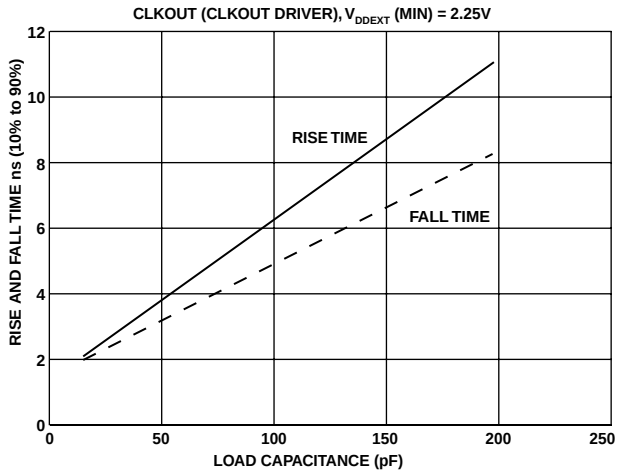

Figure 47. Typical Rise and Fall Times (10% to 90%) versus Load Capacitance for Driver B at V_{DDEXT} = 2.25 V

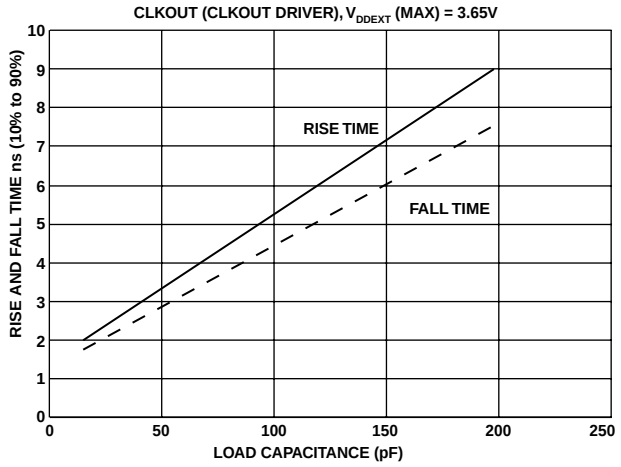

Figure 48. Typical Rise and Fall Times (10% to 90%) versus Load Capacitance for Driver B at V_{DDEXT} = 3.65 V

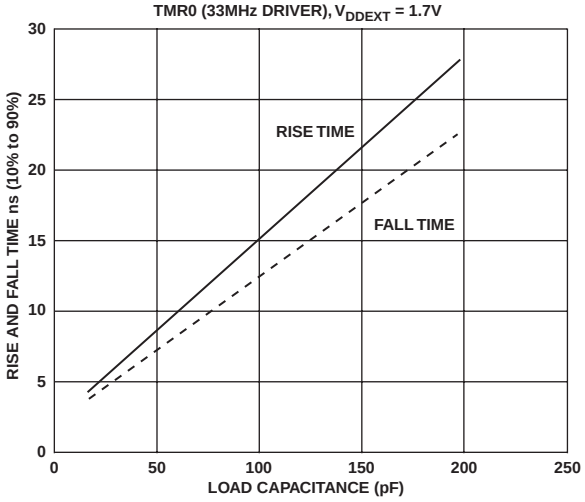

Figure 49. Typical Rise and Fall Times (10% to 90%) versus Load Capacitance for Driver C at V_{DDEXT} = 1.8 V

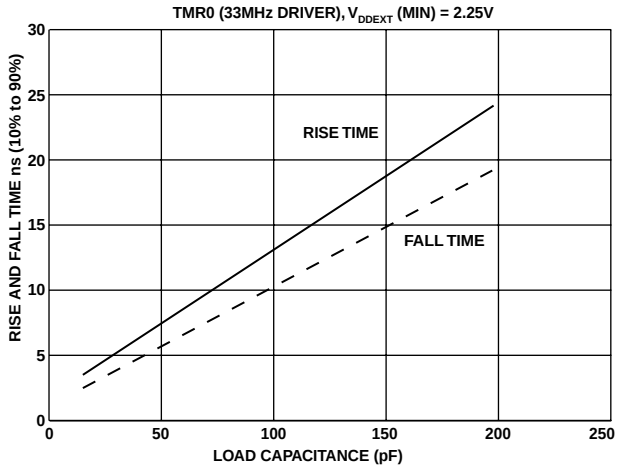

Figure 50. Typical Rise and Fall Times (10% to 90%) versus Load Capacitance for Driver C at V_{DDEXT} = 2.25 V

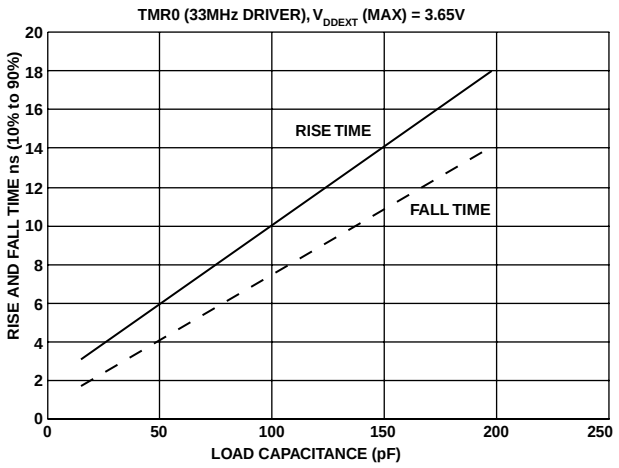

Figure 51. Typical Rise and Fall Times (10% to 90%) versus Load Capacitance for Driver C at V_{DDEXT} = 3.65 V

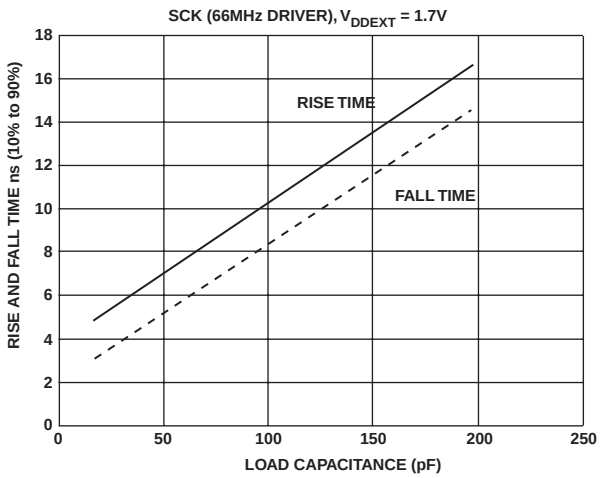

Figure 52. Typical Rise and Fall Times (10% to 90%) versus Load Capacitance for Driver D at V_{DDEXT} = 1.8 V

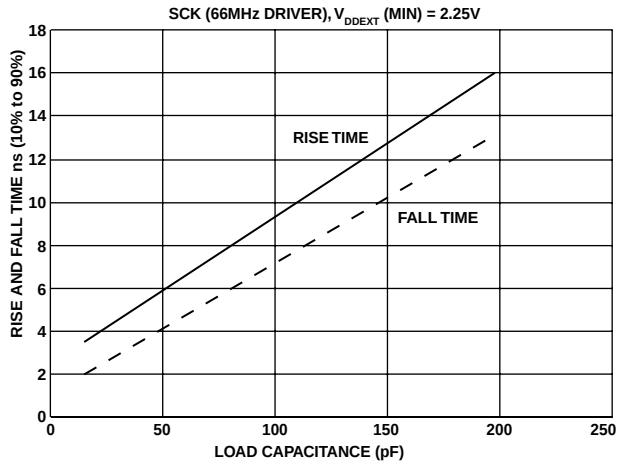

Figure 53. Typical Rise and Fall Times (10% to 90%) versus Load Capacitance for Driver D at V_{DDEXT} = 2.25 V

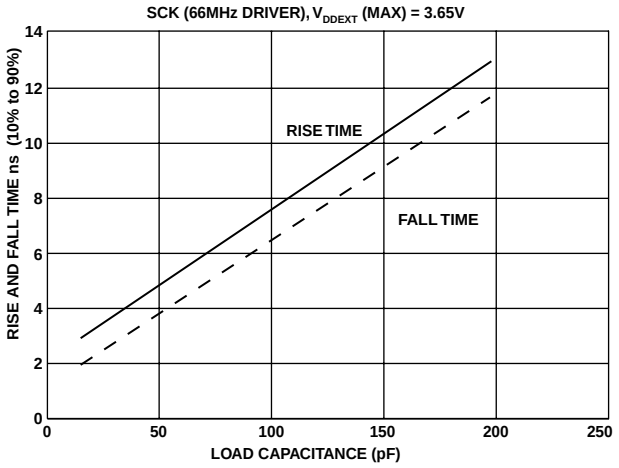

Figure 54. Typical Rise and Fall Times (10% to 90%) versus Load Capacitance for Driver D at V_{DDEXT} = 3.65 V

ENVIRONMENTAL CONDITIONS

To determine the junction temperature on the application printed circuit board use:

$$T_J = T_{CASE} + (\Psi_{JT} \times P_D)$$

where:

T_J = junction temperature (°C).

T_{CASE} = case temperature (°C) measured by customer at top center of package.

Ψ_{JT} = from Table 30 through Table 32.

P_D = power dissipation (see Power Dissipation on Page 45 for the method to calculate P_D).

Values of θ_{JA} are provided for package comparison and printed circuit board design considerations. θ_{JA} can be used for a first order approximation of T_J by the equation:

$$T_J = T_A + (\theta_{JA} \times P_D)$$

where:

T_A = ambient temperature (°C).

In Table 30 through Table 32, airflow measurements comply with JEDEC standards JESD51–2 and JESD51–6, and the junction-to-board measurement complies with JESD51–8. The junction-to-case measurement complies with MIL-STD-883 (Method 1012.1). All measurements use a 2S2P JEDEC test board.

Thermal resistance θ_{JA} in Table 30 through Table 32 is the figure of merit relating to performance of the package and board in a convective environment. θ_{JMA} represents the thermal resistance under two conditions of airflow. Ψ_{JT} represents the correlation between T_J and T_{CASE}.

Table 30. Thermal Characteristics for BC-160 Package

Parameter	Condition	Typical	Unit
θ_{JA}	0 Linear m/s Airflow	27.1	°C/W
θ_{JMA}	1 Linear m/s Airflow	23.85	°C/W
θ_{JMA}	2 Linear m/s Airflow	22.7	°C/W
θ_{JC}	Not Applicable	7.26	°C/W
Ψ_{JT}	0 Linear m/s Airflow	0.14	°C/W
Ψ_{JT}	1 Linear m/s Airflow	0.26	°C/W
Ψ_{JT}	2 Linear m/s Airflow	0.35	°C/W

Table 31. Thermal Characteristics for ST-176-1 Package

Parameter	Condition	Typical	Unit
θ_{JA}	0 Linear m/s Airflow	34.9	°C/W
θ_{JMA}	1 Linear m/s Airflow	33.0	°C/W
θ_{JMA}	2 Linear m/s Airflow	32.0	°C/W
Ψ_{JT}	0 Linear m/s Airflow	0.50	°C/W
Ψ_{JT}	1 Linear m/s Airflow	0.75	°C/W
Ψ_{JT}	2 Linear m/s Airflow	1.00	°C/W

Table 32. Thermal Characteristics for B-169 Package

Parameter	Condition	Typical	Unit
θ_{JA}	0 Linear m/s Airflow	22.8	°C/W
θ_{JMA}	1 Linear m/s Airflow	20.3	°C/W
θ_{JMA}	2 Linear m/s Airflow	19.3	°C/W
θ_{JC}	Not Applicable	10.39	°C/W
Ψ_{JT}	0 Linear m/s Airflow	0.59	°C/W
Ψ_{JT}	1 Linear m/s Airflow	0.88	°C/W
Ψ_{JT}	2 Linear m/s Airflow	1.37	°C/W

160-BALL BGA PINOUT

Table 33 lists the BGA pinout by signal. Table 34 on Page 51 lists the BGA pinout by ball number.

Table 33. 160-Ball Mini-BGA Ball Assignment (Alphabetically by Signal)

Signal	Ball No.	Signal	Ball No.	Signal	Ball No.	Signal	Ball No.
$\overline{\text{ABE0}}$	H13	DATA4	N8	GND	L6	SCK	D1
$\overline{\text{ABE1}}$	H12	DATA5	P8	GND	L8	SCKE	B13
ADDR1	J14	DATA6	M7	GND	L10	$\overline{\text{SMS}}$	C13
ADDR2	K14	DATA7	N7	GND	M4	$\overline{\text{SRAS}}$	D13
ADDR3	L14	DATA8	P7	GND	M10	$\overline{\text{SWE}}$	D12
ADDR4	J13	DATA9	M6	GND	P14	TCK	P2
ADDR5	K13	DATA10	N6	MISO	E2	TDI	M3
ADDR6	L13	DATA11	P6	MOSI	D3	TDO	N3
ADDR7	K12	DATA12	M5	NMI	B10	TFS0	H3
ADDR8	L12	DATA13	N5	PF0	D2	TFS1	E1
ADDR9	M12	DATA14	P5	PF1	C1	TMR0	L2
ADDR10	M13	DATA15	P4	PF2	C2	TMR1	M1
ADDR11	M14	DR0PRI	K1	PF3	C3	TMR2	K2
ADDR12	N14	DR0SEC	J2	PF4	B1	TMS	N2
ADDR13	N13	DR1PRI	G3	PF5	B2	$\overline{\text{TRST}}$	N1
ADDR14	N12	DR1SEC	F3	PF6	B3	TSCLK0	J1
ADDR15	M11	DT0PRI	H1	PF7	B4	TSCLK1	F1
ADDR16	N11	DT0SEC	H2	PF8	A2	TX	K3
ADDR17	P13	DT1PRI	F2	PF9	A3	VDDEXT	A1
ADDR18	P12	DT1SEC	E3	PF10	A4	VDDEXT	C7
ADDR19	P11	$\overline{\text{EMU}}$	M2	PF11	A5	VDDEXT	C12
$\overline{\text{AMS0}}$	E14	GND	A10	PF12	B5	VDDEXT	D5
$\overline{\text{AMS1}}$	F14	GND	A14	PF13	B6	VDDEXT	D9
$\overline{\text{AMS2}}$	F13	GND	B11	PF14	A6	VDDEXT	F12
$\overline{\text{AMS3}}$	G12	GND	C4	PF15	C6	VDDEXT	G4
$\overline{\text{AOE}}$	G13	GND	C5	PPI_CLK	C9	VDDEXT	J4
ARDY	E13	GND	C11	PPI0	C8	VDDEXT	J12
$\overline{\text{ARE}}$	G14	GND	D4	PPI1	B8	VDDEXT	L7
$\overline{\text{AWE}}$	H14	GND	D7	PPI2	A7	VDDEXT	L11
$\overline{\text{BG}}$	P10	GND	D8	PPI3	B7	VDDEXT	P1
$\overline{\text{BGH}}$	N10	GND	D10	$\overline{\text{RESET}}$	C10	VDDINT	D6
BMODE0	N4	GND	D11	RFS0	J3	VDDINT	E4
BMODE1	P3	GND	F4	RFS1	G2	VDDINT	E11
$\overline{\text{BR}}$	D14	GND	F11	RSCLK0	L1	VDDINT	J11
CLKIN	A12	GND	G11	RSCLK1	G1	VDDINT	L4
CLKOUT	B14	GND	H4	RTXI	A9	VDDINT	L9
DATA0	M9	GND	H11	RTXO	A8	VDDRTC	B9
DATA1	N9	GND	K4	RX	L3	VROUT0	A13
DATA2	P9	GND	K11	SA10	E12	VROUT1	B12
DATA3	M8	GND	L5	$\overline{\text{SCAS}}$	C14	XTAL	A11

Table 34. 160-Ball Mini-BGA Ball Assignment (Numerically by Ball Number)

Ball No.	Signal	Ball No.	Signal	Ball No.	Signal	Ball No.	Signal
A1	VDDEXT	C13	$\overline{\text{SMS}}$	H1	DT0PRI	M3	TDI
A2	PF8	C14	$\overline{\text{SCAS}}$	H2	DT0SEC	M4	GND
A3	PF9	D1	SCK	H3	TFS0	M5	DATA12
A4	PF10	D2	PF0	H4	GND	M6	DATA9
A5	PF11	D3	MOSI	H11	GND	M7	DATA6
A6	PF14	D4	GND	H12	$\overline{\text{ABE1}}$	M8	DATA3
A7	PPI2	D5	VDDEXT	H13	$\overline{\text{ABE0}}$	M9	DATA0
A8	RTXO	D6	VDDINT	H14	$\overline{\text{AWE}}$	M10	GND
A9	RTXI	D7	GND	J1	TSCLK0	M11	ADDR15
A10	GND	D8	GND	J2	DR0SEC	M12	ADDR9
A11	XTAL	D9	VDDEXT	J3	RFS0	M13	ADDR10
A12	CLKIN	D10	GND	J4	VDDEXT	M14	ADDR11
A13	VROUT0	D11	GND	J11	VDDINT	N1	$\overline{\text{TRST}}$
A14	GND	D12	$\overline{\text{SWE}}$	J12	VDDEXT	N2	TMS
B1	PF4	D13	$\overline{\text{SRAS}}$	J13	ADDR4	N3	TDO
B2	PF5	D14	$\overline{\text{BR}}$	J14	ADDR1	N4	BMODE0
B3	PF6	E1	TFS1	K1	DR0PRI	N5	DATA13
B4	PF7	E2	MISO	K2	TMR2	N6	DATA10
B5	PF12	E3	DT1SEC	K3	TX	N7	DATA7
B6	PF13	E4	VDDINT	K4	GND	N8	DATA4
B7	PPI3	E11	VDDINT	K11	GND	N9	DATA1
B8	PPI1	E12	SA10	K12	ADDR7	N10	$\overline{\text{BGH}}$
B9	VDDRTC	E13	ARDY	K13	ADDR5	N11	ADDR16
B10	NMI	E14	$\overline{\text{AMS0}}$	K14	ADDR2	N12	ADDR14
B11	GND	F1	TSCLK1	L1	RSCLK0	N13	ADDR13
B12	VROUT1	F2	DT1PRI	L2	TMR0	N14	ADDR12
B13	SCKE	F3	DR1SEC	L3	RX	P1	VDDEXT
B14	CLKOUT	F4	GND	L4	VDDINT	P2	TCK
C1	PF1	F11	GND	L5	GND	P3	BMODE1
C2	PF2	F12	VDDEXT	L6	GND	P4	DATA15
C3	PF3	F13	$\overline{\text{AMS2}}$	L7	VDDEXT	P5	DATA14
C4	GND	F14	$\overline{\text{AMS1}}$	L8	GND	P6	DATA11
C5	GND	G1	RSCLK1	L9	VDDINT	P7	DATA8
C6	PF15	G2	RFS1	L10	GND	P8	DATA5
C7	VDDEXT	G3	DR1PRI	L11	VDDEXT	P9	DATA2
C8	PPI0	G4	VDDEXT	L12	ADDR8	P10	$\overline{\text{BG}}$
C9	PPI_CLK	G11	GND	L13	ADDR6	P11	ADDR19
C10	$\overline{\text{RESET}}$	G12	$\overline{\text{AMS3}}$	L14	ADDR3	P12	ADDR18
C11	GND	G13	$\overline{\text{AOE}}$	M1	TMR1	P13	ADDR17
C12	VDDEXT	G14	$\overline{\text{ARE}}$	M2	$\overline{\text{EMU}}$	P14	GND

Figure 55 lists the top view of the BGA ball configuration.
Figure 56 lists the bottom view of the BGA ball configuration.

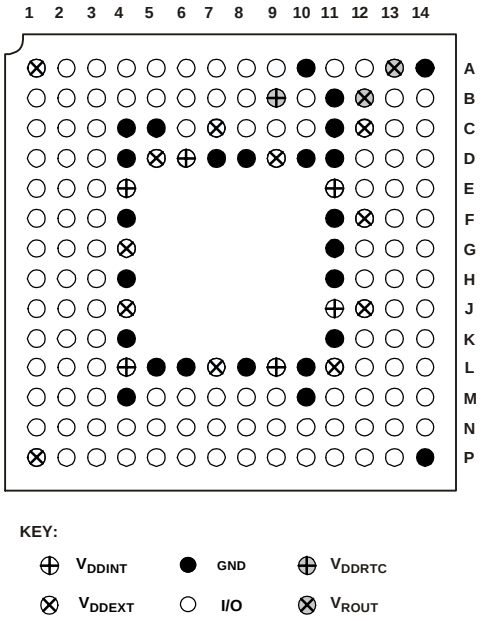

Figure 55. 160-Ball Mini-BGA Ground Configuration (Top View)

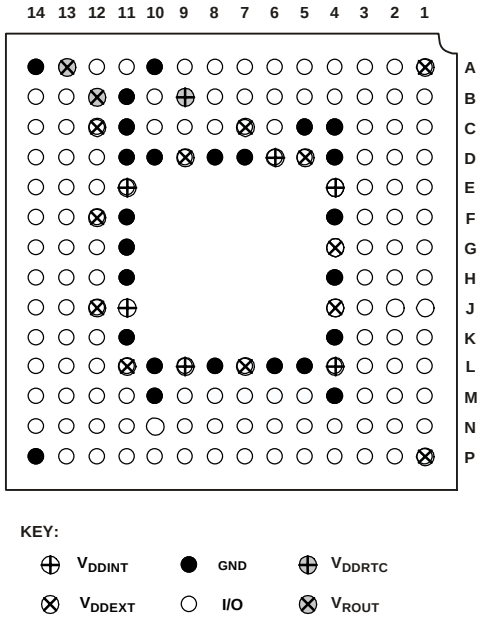

Figure 56. 160-Ball Mini-BGA Ground Configuration (Bottom View)

169-BALL PBGA PINOUT

Table 35 lists the PBGA pinout by signal. Table 36 on Page 54 lists the PBGA pinout by ball number.

Table 35. 169-Ball PBGA Ball Assignment (Alphabetically by Signal)

Signal	Ball No.	Signal	Ball No.	Signal	Ball No.	Signal	Ball No.	Signal	Ball No.
$\overline{\text{ABE0}}$	H16	DATA4	U12	GND	K9	RTXI	A10	VDDEXT	K6
$\overline{\text{ABE1}}$	H17	DATA5	U11	GND	K10	RTXO	A11	VDDEXT	L6
ADDR1	J16	DATA6	T10	GND	K11	RX	T1	VDDEXT	M6
ADDR2	J17	DATA7	U10	GND	L7	SA10	B15	VDDEXT	M7
ADDR3	K16	DATA8	T9	GND	L8	$\overline{\text{SCAS}}$	A16	VDDEXT	M8
ADDR4	K17	DATA9	U9	GND	L9	SCK	D1	VDDEXT	T2
ADDR5	L16	DATA10	T8	GND	L10	SCKE	B14	VROUT0	B12
ADDR6	L17	DATA11	U8	GND	L11	$\overline{\text{SMS}}$	A17	VROUT1	B13
ADDR7	M16	DATA12	U7	GND	M9	$\overline{\text{SRAS}}$	A15	XTAL	A13
ADDR8	M17	DATA13	T7	GND	T16	$\overline{\text{SWE}}$	B17		
ADDR9	N17	DATA14	U6	MISO	E2	TCK	U4		
ADDR10	N16	DATA15	T6	MOSI	E1	TDI	U3		
ADDR11	P17	DR0PRI	M2	NMI	B11	TDO	T4		
ADDR12	P16	DR0SEC	M1	PF0	D2	TFS0	L1		
ADDR13	R17	DR1PRI	H1	PF1	C1	TFS1	G2		
ADDR14	R16	DR1SEC	H2	PF2	B1	TMR0	R1		
ADDR15	T17	DT0PRI	K2	PF3	C2	TMR1	P2		
ADDR16	U15	DT0SEC	K1	PF4	A1	TMR2	P1		
ADDR17	T15	DT1PRI	F1	PF5	A2	TMS	T3		
ADDR18	U16	DT1SEC	F2	PF6	B3	$\overline{\text{TRST}}$	U2		
ADDR19	T14	$\overline{\text{EMU}}$	U1	PF7	A3	TSCLK0	L2		
$\overline{\text{AMS0}}$	D17	GND	B16	PF8	B4	TSCLK1	G1		
$\overline{\text{AMS1}}$	E16	GND	F11	PF9	A4	TX	R2		
$\overline{\text{AMS2}}$	E17	GND	G7	PF10	B5	VDD	F12		
$\overline{\text{AMS3}}$	F16	GND	G8	PF11	A5	VDD	G12		
$\overline{\text{AOE}}$	F17	GND	G9	PF12	A6	VDD	H12		
ARDY	C16	GND	G10	PF13	B6	VDD	J12		
$\overline{\text{ARE}}$	G16	GND	G11	PF14	A7	VDD	K12		
$\overline{\text{AWE}}$	G17	GND	H7	PF15	B7	VDD	L12		
$\overline{\text{BG}}$	T13	GND	H8	PPI_CLK	B10	VDD	M10		
$\overline{\text{BGH}}$	U17	GND	H9	PPI0	B9	VDD	M11		
BMODE0	U5	GND	H10	PPI1	A9	VDD	M12		
BMODE1	T5	GND	H11	PPI2	B8	VDDEXT	B2		
$\overline{\text{BR}}$	C17	GND	J7	PPI3	A8	VDDEXT	F6		
CLKIN	A14	GND	J8	$\overline{\text{RESET}}$	A12	VDDEXT	F7		
CLKOUT	D16	GND	J9	RFS0	N1	VDDEXT	F8		
DATA0	U14	GND	J10	RFS1	J1	VDDEXT	F9		
DATA1	T12	GND	J11	RSCLK0	N2	VDDEXT	G6		
DATA2	U13	GND	K7	RSCLK1	J2	VDDEXT	H6		
DATA3	T11	GND	K8	RTCVDD	F10	VDDEXT	J6		

Table 36. 169-Ball PBGA Ball Assignment (Numerically by Ball Number)

Ball No.	Signal	Ball No.	Signal	Ball No.	Signal	Ball No.	Signal	Ball No.	Signal
A1	PF4	D16	CLKOUT	J2	RSCLK1	M12	VDD	U9	DATA9
A2	PF5	D17	$\overline{\text{AMS0}}$	J6	VDDEXT	M16	ADDR7	U10	DATA7
A3	PF7	E1	MOSI	J7	GND	M17	ADDR8	U11	DATA5
A4	PF9	E2	MISO	J8	GND	N1	RFS0	U12	DATA4
A5	PF11	E16	$\overline{\text{AMS1}}$	J9	GND	N2	RSCLK0	U13	DATA2
A6	PF12	E17	$\overline{\text{AMS2}}$	J10	GND	N16	ADDR10	U14	DATA0
A7	PF14	F1	DT1PRI	J11	GND	N17	ADDR9	U15	ADDR16
A8	PPI3	F2	DT1SEC	J12	VDD	P1	TMR2	U16	ADDR18
A9	PPI1	F6	VDDEXT	J16	ADDR1	P2	TMR1	U17	$\overline{\text{BGH}}$
A10	RTXI	F7	VDDEXT	J17	ADDR2	P16	ADDR12		
A11	RTXO	F8	VDDEXT	K1	DT0SEC	P17	ADDR11		
A12	$\overline{\text{RESET}}$	F9	VDDEXT	K2	DT0PRI	R1	TMR0		
A13	XTAL	F10	RTCVDD	K6	VDDEXT	R2	TX		
A14	CLKIN	F11	GND	K7	GND	R16	ADDR14		
A15	$\overline{\text{SRAS}}$	F12	VDD	K8	GND	R17	ADDR13		
A16	$\overline{\text{SCAS}}$	F16	$\overline{\text{AMS3}}$	K9	GND	T1	RX		
A17	$\overline{\text{SMS}}$	F17	$\overline{\text{AOE}}$	K10	GND	T2	VDDEXT		
B1	PF2	G1	TSCLK1	K11	GND	T3	TMS		
B2	VDDEXT	G2	TFS1	K12	VDD	T4	TDO		
B3	PF6	G6	VDDEXT	K16	ADDR3	T5	BMODE1		
B4	PF8	G7	GND	K17	ADDR4	T6	DATA15		
B5	PF10	G8	GND	L1	TFS0	T7	DATA13		
B6	PF13	G9	GND	L2	TSCLK0	T8	DATA10		
B7	PF15	G10	GND	L6	VDDEXT	T9	DATA8		
B8	PPI2	G11	GND	L7	GND	T10	DATA6		
B9	PPI0	G12	VDD	L8	GND	T11	DATA3		
B10	PPI_CLK	G16	$\overline{\text{ARE}}$	L9	GND	T12	DATA1		
B11	NMI	G17	$\overline{\text{AWE}}$	L10	GND	T13	$\overline{\text{BG}}$		
B12	VROUT0	H1	DR1PRI	L11	GND	T14	ADDR19		
B13	VROUT1	H2	DR1SEC	L12	VDD	T15	ADDR17		
B14	SCKE	H6	VDDEXT	L16	ADDR5	T16	GND		
B15	SA10	H7	GND	L17	ADDR6	T17	ADDR15		
B16	GND	H8	GND	M1	DR0SEC	U1	$\overline{\text{EMU}}$		
B17	$\overline{\text{SWE}}$	H9	GND	M2	DR0PRI	U2	$\overline{\text{TRST}}$		
C1	PF1	H10	GND	M6	VDDEXT	U3	TDI		
C2	PF3	H11	GND	M7	VDDEXT	U4	TCK		
C16	ARDY	H12	VDD	M8	VDDEXT	U5	BMODE0		
C17	$\overline{\text{BR}}$	H16	$\overline{\text{ABE0}}$	M9	GND	U6	DATA14		
D1	SCK	H17	$\overline{\text{ABE1}}$	M10	VDD	U7	DATA12		
D2	PF0	J1	RFS1	M11	VDD	U8	DATA11		

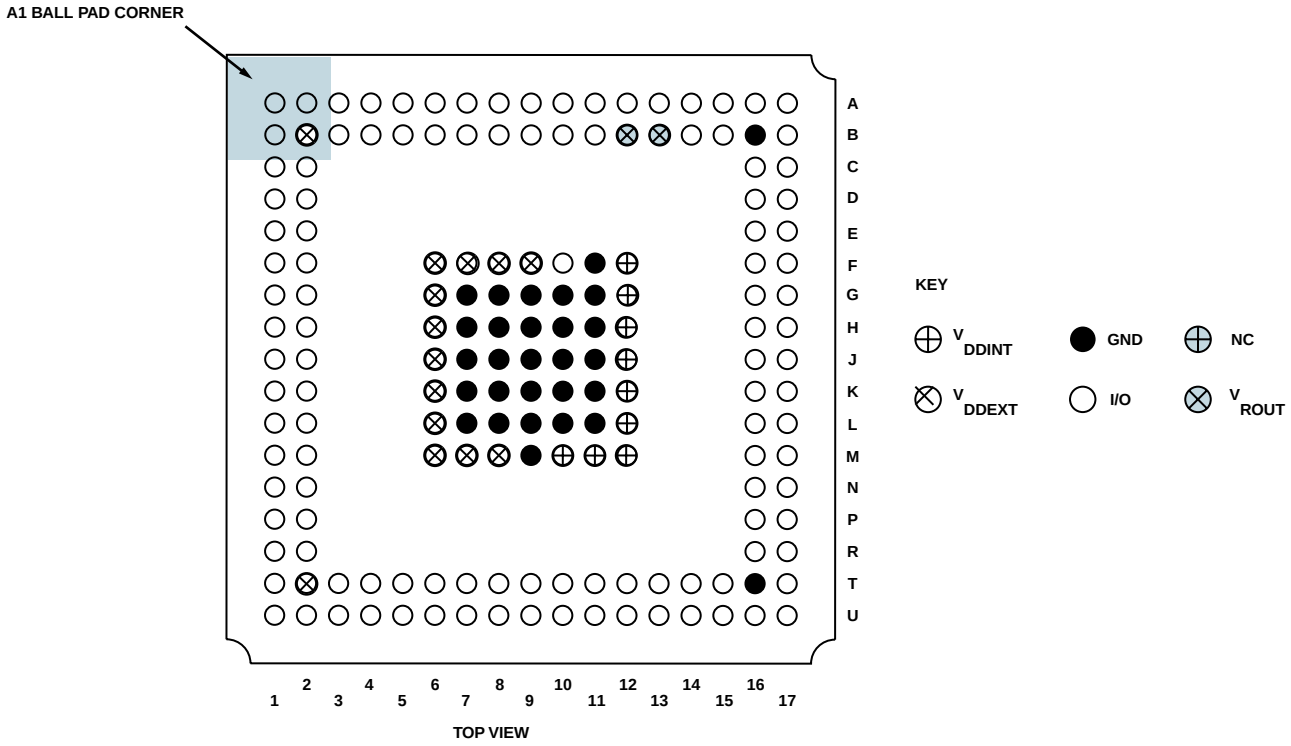

Figure 57. 169-Ball PBGA Ground Configuration (Top View)

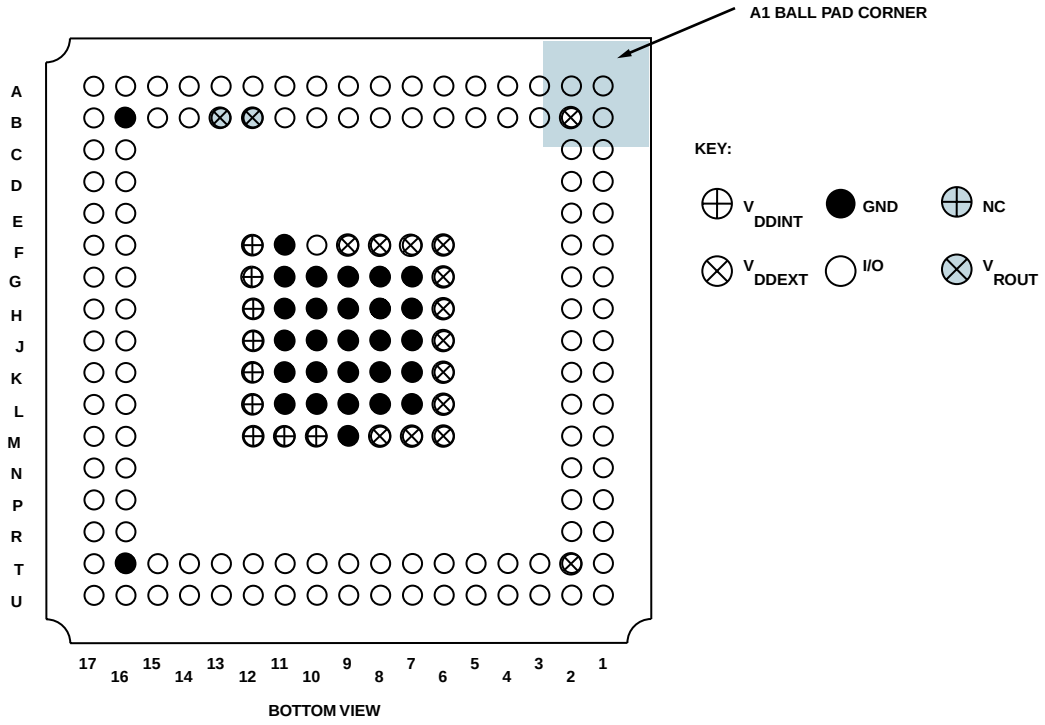

Figure 58. 169-Ball PBGA Ground Configuration (Bottom View)

176-LEAD LQFP PINOUT

Table 37 lists the LQFP pinout by signal. Table 38 on Page 57 lists the LQFP pinout by lead number.

Table 37. 176-Lead LQFP Pin Assignment (Alphabetically by Signal)

Signal	Lead No.	Signal	Lead No.	Signal	Lead No.	Signal	Lead No.	Signal	Lead No.
$\overline{\text{ABE0}}$	151	DATA3	113	GND	88	PPI_CLK	21	VDDEXT	71
$\overline{\text{ABE1}}$	150	DATA4	112	GND	89	PPI0	22	VDDEXT	93
ADDR1	149	DATA5	110	GND	90	PPI1	23	VDDEXT	107
ADDR2	148	DATA6	109	GND	91	PPI2	24	VDDEXT	118
ADDR3	147	DATA7	108	GND	92	PPI3	26	VDDEXT	134
ADDR4	146	DATA8	105	GND	97	$\overline{\text{RESET}}$	13	VDDEXT	145
ADDR5	142	DATA9	104	GND	106	RFS0	75	VDDEXT	156
ADDR6	141	DATA10	103	GND	117	RFS1	64	VDDEXT	171
ADDR7	140	DATA11	102	GND	128	RSCLK0	76	VDDINT	25
ADDR8	139	DATA12	101	GND	129	RSCLK1	65	VDDINT	52
ADDR9	138	DATA13	100	GND	130	RTXI	17	VDDINT	66
ADDR10	137	DATA14	99	GND	131	RTXO	16	VDDINT	80
ADDR11	136	DATA15	98	GND	132	RX	82	VDDINT	111
ADDR12	135	DR0PRI	74	GND	133	SA10	164	VDDINT	143
ADDR13	127	DR0SEC	73	GND	144	$\overline{\text{SCAS}}$	166	VDDINT	157
ADDR14	126	DR1PRI	63	GND	155	SCK	53	VDDINT	168
ADDR15	125	DR1SEC	62	GND	170	SCKE	173	VDDRTC	18
ADDR16	124	DT0PRI	68	GND	174	$\overline{\text{SMS}}$	172	VROUT0	5
ADDR17	123	DT0SEC	67	GND	175	$\overline{\text{SRAS}}$	167	VROUT1	4
ADDR18	122	DT1PRI	59	GND	176	$\overline{\text{SWE}}$	165	XTAL	11
ADDR19	121	DT1SEC	58	MISO	54	TCK	94		
$\overline{\text{AMS0}}$	161	$\overline{\text{EMU}}$	83	MOSI	55	TDI	86		
$\overline{\text{AMS1}}$	160	GND	1	NMI	14	TDO	87		
$\overline{\text{AMS2}}$	159	GND	2	PF0	51	TFS0	69		
$\overline{\text{AMS3}}$	158	GND	3	PF1	50	TFS1	60		
$\overline{\text{AOE}}$	154	GND	7	PF2	49	TMR0	79		
ARDY	162	GND	8	PF3	48	TMR1	78		
$\overline{\text{ARE}}$	153	GND	9	PF4	47	TMR2	77		
$\overline{\text{AWE}}$	152	GND	15	PF5	46	TMS	85		
$\overline{\text{BG}}$	119	GND	19	PF6	38	$\overline{\text{TRST}}$	84		
$\overline{\text{BGH}}$	120	GND	30	PF7	37	TSCLK0	72		
BMODE0	96	GND	39	PF8	36	TSCLK1	61		
BMODE1	95	GND	40	PF9	35	TX	81		
$\overline{\text{BR}}$	163	GND	41	PF10	34	VDDEXT	6		
CLKIN	10	GND	42	PF11	33	VDDEXT	12		
CLKOUT	169	GND	43	PF12	32	VDDEXT	20		
DATA0	116	GND	44	PF13	29	VDDEXT	31		
DATA1	115	GND	56	PF14	28	VDDEXT	45		
DATA10	103	GND	70	PF15	27	VDDEXT	57		

Table 38. 176-Lead LQFP Pin Assignment (Numerically by Lead Number)

Lead No.	Signal	Lead No.	Signal	Lead No.	Signal	Lead No.	Signal	Lead No.	Signal
1	GND	41	GND	81	TX	121	ADDR19	161	$\overline{\text{AMS0}}$
2	GND	42	GND	82	RX	122	ADDR18	162	ARDY
3	GND	43	GND	83	$\overline{\text{EMU}}$	123	ADDR17	163	$\overline{\text{BR}}$
4	VROUT1	44	GND	84	$\overline{\text{TRST}}$	124	ADDR16	164	SA10
5	VROUT0	45	VDDEXT	85	TMS	125	ADDR15	165	$\overline{\text{SWE}}$
6	VDDEXT	46	PF5	86	TDI	126	ADDR14	166	$\overline{\text{SCAS}}$
7	GND	47	PF4	87	TDO	127	ADDR13	167	$\overline{\text{SRAS}}$
8	GND	48	PF3	88	GND	128	GND	168	VDDINT
9	GND	49	PF2	89	GND	129	GND	169	CLKOUT
10	CLKIN	50	PF1	90	GND	130	GND	170	GND
11	XTAL	51	PF0	91	GND	131	GND	171	VDDEXT
12	VDDEXT	52	VDDINT	92	GND	132	GND	172	$\overline{\text{SMS}}$
13	$\overline{\text{RESET}}$	53	SCK	93	VDDEXT	133	GND	173	SCKE
14	NMI	54	MISO	94	TCK	134	VDDEXT	174	GND
15	GND	55	MOSI	95	BMODE1	135	ADDR12	175	GND
16	RTXO	56	GND	96	BMODE0	136	ADDR11	176	GND
17	RTXI	57	VDDEXT	97	GND	137	ADDR10		
18	VDDRTC	58	DT1SEC	98	DATA15	138	ADDR9		
19	GND	59	DT1PRI	99	DATA14	139	ADDR8		
20	VDDEXT	60	TFS1	100	DATA13	140	ADDR7		
21	PPI_CLK	61	TSCLK1	101	DATA12	141	ADDR6		
22	PPI0	62	DR1SEC	102	DATA11	142	ADDR5		
23	PPI1	63	DR1PRI	103	DATA10	143	VDDINT		
24	PPI2	64	RFS1	104	DATA9	144	GND		
25	VDDINT	65	RSCLK1	105	DATA8	145	VDDEXT		
26	PPI3	66	VDDINT	106	GND	146	ADDR4		
27	PF15	67	DT0SEC	107	VDDEXT	147	ADDR3		
28	PF14	68	DT0PRI	108	DATA7	148	ADDR2		
29	PF13	69	TFS0	109	DATA6	149	ADDR1		
30	GND	70	GND	110	DATA5	150	$\overline{\text{ABE1}}$		
31	VDDEXT	71	VDDEXT	111	VDDINT	151	$\overline{\text{ABE0}}$		
32	PF12	72	TSCLK0	112	DATA4	152	$\overline{\text{AWE}}$		
33	PF11	73	DR0SEC	113	DATA3	153	$\overline{\text{ARE}}$		
34	PF10	74	DR0PRI	114	DATA2	154	$\overline{\text{AOE}}$		
35	PF9	75	RFS0	115	DATA1	155	GND		
36	PF8	76	RSCLK0	116	DATA0	156	VDDEXT		
37	PF7	77	TMR2	117	GND	157	VDDINT		
38	PF6	78	TMR1	118	VDDEXT	158	$\overline{\text{AMS3}}$		
39	GND	79	TMR0	119	$\overline{\text{BG}}$	159	$\overline{\text{AMS2}}$		
40	GND	80	VDDINT	120	$\overline{\text{BGH}}$	160	$\overline{\text{AMS1}}$		

OUTLINE DIMENSIONS

Dimensions in the outline dimension figures are shown in millimeters.

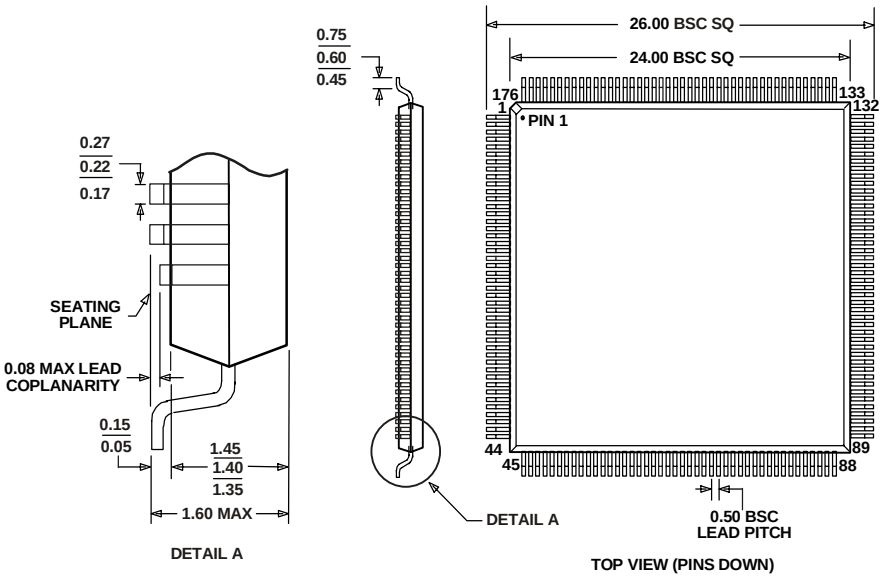

NOTES
1. DIMENSIONS IN MILLIMETERS
2. ACTUAL POSITION OF EACH LEAD IS WITHIN 0.08 OF ITS IDEAL POSITION, WHEN MEASURED IN THE LATERAL DIRECTION.
3. CENTER DIMENSIONS ARE NOMINAL

Figure 59. Quad Flatpack (LQFP) ST-176-1

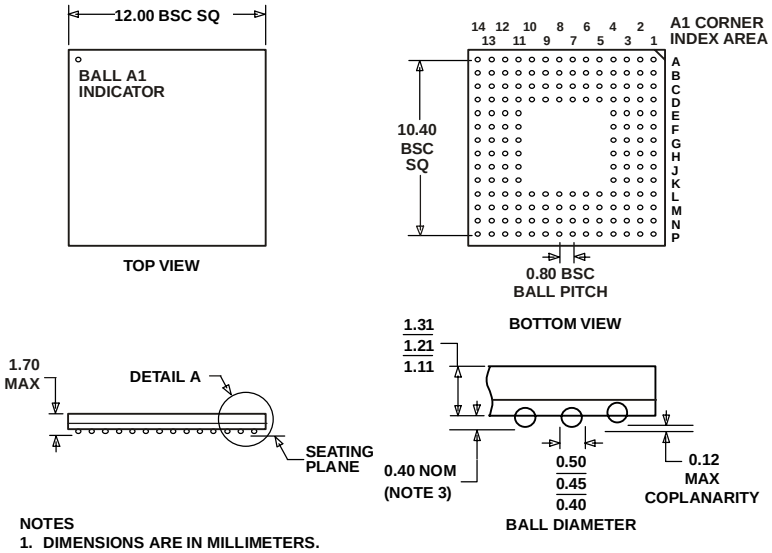

NOTES
1. DIMENSIONS ARE IN MILLIMETERS.
2. COMPLIES WITH JEDEC REGISTERED OUTLINE MO-205, VARIATION AE WITH EXCEPTION OF THE BALL DIAMETER.
3. MINIMUM BALL HEIGHT 0.25.

Figure 60. Chip Scale Package Ball Grid Array (Mini-BGA) BC-160

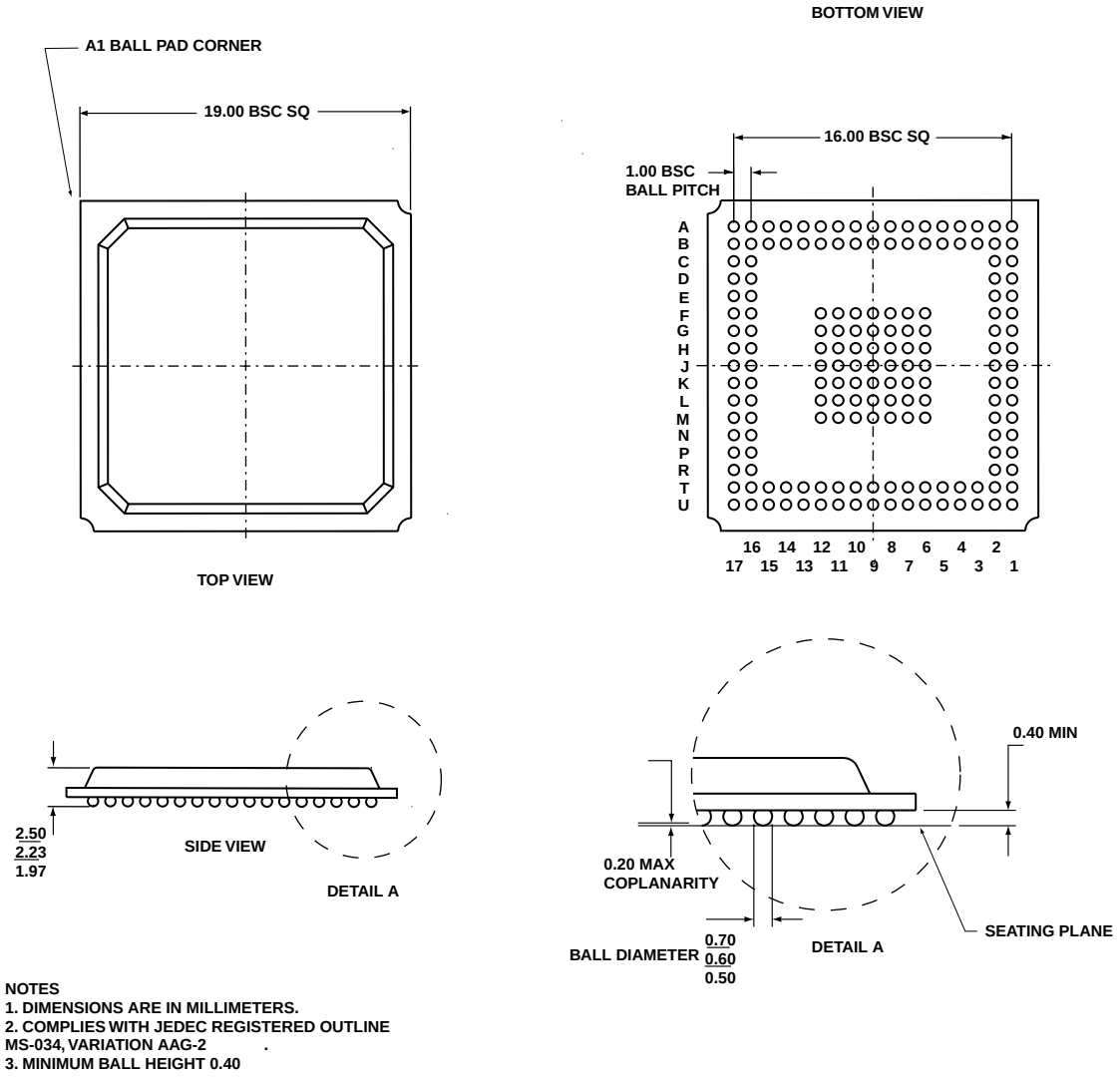

Figure 61. Plastic Ball Grid Array (PBGA) B-169

SURFACE MOUNT DESIGN

Table 39 is provided as an aid to PCB design. For industry-standard design recommendations, refer to IPC-7351, *Generic Requirements for Surface Mount Design and Land Pattern Standard.*

Table 39. BGA Data for Use with Surface Mount Design

Package	Ball Attach Type	Solder Mask Opening	Ball Pad Size
Chip Scale Package Ball Grid Array (Mini-BGA) BC-160	Solder Mask Defined	0.40 mm diameter	0.55 mm diameter
Plastic Ball Grid Array (PBGA) B-169	Solder Mask Defined	0.43 mm diameter	0.56 mm diameter

ORDERING GUIDE

Model	Temperature Range[1]	Package Description	Package Option	Instruction Rate (Max)	Operating Voltage (Nom)
ADSP-BF532SBBC400	–40°C to +85°C	160-Ball Chip Scale Package Ball Grid Array (Mini-BGA)	BC-160	400 MHz	1.2 V internal, 1.8 V, 2.5 V or 3.3 V I/O
ADSP-BF532SBBCZ400[2]	–40°C to +85°C	160-Ball Chip Scale Package Ball Grid Array (Mini-BGA)	BC-160	400 MHz	1.2 V internal, 1.8 V, 2.5 V or 3.3 V I/O
ADSP-BF532WBBCZ-4A[2, 3]	–40°C to +85°C	160-Ball Chip Scale Package Ball Grid Array (Mini-BGA)	BC-160	400 MHz	1.2 V internal, 3.0 V or 3.3 V I/O
ADSP-BF532WYBCZ-4A[2, 3]	–40°C to +105°C	160-Ball Chip Scale Package Ball Grid Array (Mini-BGA)	BC-160	400 MHz	1.2 V internal, 3.0 V or 3.3 V I/O
ADSP-BF532SBST400	–40°C to +85°C	176-Lead Quad Flatpack (LQFP)	ST-176-1	400 MHz	1.2 V internal, 2.5 V or 3.3 V I/O
ADSP-BF532SBSTZ400[2]	–40°C to +85°C	176-Lead Quad Flatpack (LQFP)	ST-176-1	400 MHz	1.2 V internal, 2.5 V or 3.3 V I/O
ADSP-BF532WBSTZ-4A[2, 3]	–40°C to +85°C	176-Lead Quad Flatpack (LQFP)	ST-176-1	400 MHz	1.2 V internal, 3.0 V or 3.3 V I/O
ADSP-BF532SBB400	–40°C to +85°C	169-Ball Plastic Ball Grid Array (PBGA)	B-169	400 MHz	1.2 V internal, 2.5 V or 3.3 V I/O
ADSP-BF532SBBZ400[2]	–40°C to +85°C	169-Ball Plastic Ball Grid Array (PBGA)	B-169	400 MHz	1.2 V internal, 2.5 V or 3.3 V I/O
ADSP-BF532WBBZ-4A[2, 3]	–40°C to +85°C	169-Ball Plastic Ball Grid Array (PBGA)	B-169	400 MHz	1.2 V internal, 3.0 V or 3.3 V I/O
ADSP-BF532WYBZ-4A[2, 3]	–40°C to +105°C	169-Ball Plastic Ball Grid Array (PBGA)	B-169	400 MHz	1.2 V internal, 3.0 V or 3.3 V I/O
ADSP-BF531SBBC400	–40°C to +85°C	160-Ball Chip Scale Package Ball Grid Array (Mini-BGA)	BC-160	400 MHz	1.2 V internal, 1.8 V, 2.5 V or 3.3 V I/O
ADSP-BF531SBBCZ400[2]	–40°C to +85°C	160-Ball Chip Scale Package Ball Grid Array (Mini-BGA)	BC-160	400 MHz	1.2 V internal, 1.8 V, 2.5 V or 3.3 V I/O
ADSP-BF531WBBCZ-4A[2, 3]	–40°C to +85°C	160-Ball Chip Scale Package Ball Grid Array (Mini-BGA)	BC-160	400 MHz	1.2 V internal, 3.0 V or 3.3 V I/O
ADSP-BF531WYBCZ-4A[2, 3]	–40°C to +105°C	160-Ball Chip Scale Package Ball Grid Array (Mini-BGA)	BC-160	400 MHz	1.2 V internal, 3.0 V or 3.3 V I/O
ADSP-BF531SBST400	–40°C to +85°C	176-Lead Quad Flatpack (LQFP)	ST-176-1	400 MHz	1.2 V internal, 2.5 V or 3.3 V I/O
ADSP-BF531SBSTZ400[2]	–40°C to +85°C	176-Lead Quad Flatpack (LQFP)	ST-176-1	400 MHz	1.2 V internal, 2.5 V or 3.3 V I/O
ADSP-BF531WBSTZ-4A[2, 3]	–40°C to +85°C	176-Lead Quad Flatpack (LQFP)	ST-176-1	400 MHz	1.2 V internal, 3.0 V or 3.3 V I/O
ADSP-BF531SBB400	–40°C to +85°C	169-Ball Plastic Ball Grid Array (PBGA)	B-169	400 MHz	1.2 V internal, 2.5 V or 3.3 V I/O
ADSP-BF531SBBZ400[2]	–40°C to +85°C	169-Ball Plastic Ball Grid Array (PBGA)	B-169	400 MHz	1.2 V internal, 2.5 V or 3.3 V I/O
ADSP-BF531WBBZ-4A[2, 3]	–40°C to +85°C	169-Ball Plastic Ball Grid Array (PBGA)	B-169	400 MHz	1.2 V internal, 3.0 V or 3.3 V I/O
ADSP-BF531WYBZ-4A[2, 3]	–40°C to +105°C	169-Ball Plastic Ball Grid Array (PBGA)	B-169	400 MHz	1.2 V internal, 3.0 V or 3.3 V I/O

[1] Referenced temperature is ambient temperature.
[2] Z = Pb-free part.
[3] Automotive grade part.

©2006 Analog Devices, Inc. All rights reserved. Trademarks and registered trademarks are the property of their respective owners.
D03728-0-8/06(D)

ANALOG DEVICES

www.analog.com