UNITED STATES PATENT AND TRADEMARK OFFICE

PATENT TRIAL AND APPEAL BOARD

DISH NETWORK LLC,
Petitioner,

v.

ENTROPIC COMMUNICATIONS, LLC,
Patent Owner.

CASE: IPR2024-00393
U.S. PATENT NO. 7,295,518

PATENT OWNER'S NOTICE OF APPEAL

Notice is hereby given, pursuant to 37 C.F.R. §§ 90.2(a), 90.3, and 35 U.S.C. §§ 141 and 142, that Patent Owner Entropic Communications, LLC ("Patent Owner") appeals to the United States Court of Appeals for the Federal Circuit from the Final Written Decision of the Patent Trial and Appeal Board in IPR2024-00393, entered on July 22, 2025 (Paper 42), and from all underlying orders, decisions, rulings, and opinions. A copy of the Final Written Decision is attached hereto as Exhibit A. This Notice of Appeal is timely under 37 C.F.R § 90.3, having been filed within 63 days of the Final Written Decision.

In accordance with 37 C.F.R. § 90.2(a)(3)(ii), Patent Owner states that the issues on appeal include, but are not limited to, the Board's determination that the challenged claims of U.S. Patent No. 7,295,518 are unpatentable, and any related issues, findings, or determinations, leading thereto or underlying that decision.

Patent Owner is filing a copy of this Notice of Appeal with the Director of the United States Patent and Trademark Office, and a copy of this Notice of Appeal is being filed electronically with the Board. In addition, a copy of this Notice of Appeal is being electronically filed with the United States Court of Appeals for the Federal Circuit, along with the required docketing fee.

Dated: September 19, 2025

Respectfully submitted,

By: /*Erik J. Halverson*/

Erik J. Halverson
Reg. No. 73,552
K&L GATES LLP
4 Embarcadero Center, Suite 1200
San Francisco, CA 94111
erik.halverson@klgates.com
T: (415) 882-8238
F: (415) 882-8220

Counsel for Patent Owner

CERTIFICATE OF SERVICE

Pursuant to 37 C.F.R. § 90.2(a)(1), on September 19, 2025, the foregoing Notice of Appeal was electronically filed with the Patent Trial and Appeal Board via the P-TACTS System in accordance with 37 C.F.R. § 42.6(b)(1), and submitted electronically to the Director via email at efileSO@uspto.gov, in accordance with 37 C.F.R. § 90.2(a)(1)(i).

Pursuant to 37 C.F.R. § 90.2(a)(2) on September 19, 2025, the foregoing Notice of Appeal was electronically filed with the Court of Appeals for the Federal Circuit via CM/ECF with requisite fees paid via pay.gov.

Pursuant to 37 C.F.R. § 42.6(e) and the parties' agreement to accept electronic service, on September 19, 2025, the foregoing Notice of Appeal was served via email on the following counsel of record for Petitioner:

Adam R. Shartzer
Ruffin B. Cordell
Michael J. Ballanco
Matthew P. Mosteller
John J. Thuermer
Timothy Riffe
Usman Khan
Alyaman Amer
Christopher Marchese
Fish & Richardson P.C.
60 South Sixth Street
Minneapolis, MN 55402
Tel: 202-783-5070
Fax: 877-769-7945
Email: IPR45035-0025IP1@fr.com

By: /*Erik J. Halverson*/
Erik J. Halverson
Reg. No. 73,552

EXHIBIT A

Trials@uspto.gov
571-272-7822

Paper 42
Date: July 22, 2025

UNITED STATES PATENT AND TRADEMARK OFFICE

BEFORE THE PATENT TRIAL AND APPEAL BOARD

DISH NETWORK LLC,
Petitioner,

v.

ENTROPIC COMMUNICATIONS, LLC,
Patent Owner.

IPR2024-00393[1]
Patent 7,295,518 B1

Before JON M. JURGOVAN, SCOTT B. HOWARD, and AARON W. MOORE, *Administrative Patent Judges.*

JURGOVAN, *Administrative Patent Judge.*

DECISION
Final Written Decision
Determining All Challenged Claims Unpatentable
35 U.S.C. § 318(a)

[1] IPR2024-01059 has been joined to this case. *See* Paper 20.

I. INTRODUCTION

A. Background and Summary

Dish Network, LLC ("Petitioner") filed a Petition requesting *inter partes* review ("IPR") of claims 1 and 3 of U.S. Patent No. 7,295,518 B1 (Ex. 1001, the "'518 patent"). Paper 2 ("Petition" or "Pet."). Patent Owner, Entropic Communications, LLC, filed a Preliminary Response to the Petition. Paper 6. After consideration of the briefs and evidence, we granted institution of *inter partes* review on July 29, 2024. Paper 7 ("Institution Decision" or "Inst. Dec.").

Thereafter, Patent Owner filed a Response on November 8, 2024. Paper 16 ("PO Resp."). Petitioner filed a Reply on January 31, 2025 (Paper 21, "Pet. Reply"). Patent Owner filed a Sur-Reply on March 13, 2025 (Paper 30, "PO Sur-Reply").

On July 1, 2024, DIRECTV, LLC filed a petition and motion for joinder[2] to this proceeding, which we granted on December 23, 2024. Paper 20.

Petitioner and Patent Owner each requested oral argument. Papers 28, 29. The Board held an oral hearing on May 12, 2025, and entered the hearing transcript in the record. Paper 41.

We have jurisdiction under 35 U.S.C. § 6. This Final Written Decision is entered pursuant to 35 U.S.C. § 318(a). Having reviewed the complete trial record, we determine that Petitioner has shown, by a preponderance of the evidence, that the challenged claims are unpatentable.

---

[2] *See* note 1.

B. Real Parties in Interest

Petitioner identifies itself and Dish Network Service LLC, DISH Network Corporation, and Dish Network California Service Corporation as real parties-in-interest. Pet. 88 (Petitioner's Mandatory Notices).

DIRECTV, LLC identifies itself as the real party-in interest. IPR2024-01059, Paper 1, 83. DIRECTV, LLC also identifies DIRECTV Holdings LLC, The DIRECTV Group, Inc., and DIRECTV Group Holdings, LLC as related entities, and states that each "maintains its own independent status, identity, and structure." *Id.*

Patent Owner identifies itself as the real party-in-interest. Paper 5, 1 (Patent Owner's Mandatory Notice).

C. Related Matters

Petitioner and Patent Owner ("the parties") identify the following as matters related to this proceeding:

Entropic Communications, LLC v. DirecTV, LLC, 2-23-cv-05253 (CDCA), filed July 1, 2023;

Entropic Communications, LLC v. DISH Network Corporation, 2-23-cv-01043 (CDCA), filed February 10, 2023;

Entropic Communications, LLC v. Cox Communications, Inc., 2-23-cv-01047 (CDCA), filed February 10, 2023;

Entropic Communications, LLC v. Comcast Corporation, 2-23-cv-01048 (CDCA), filed February 10, 2023;

Entropic Communications, LLC v. Charter Communications, Inc., 2-23-cv-00050 (EDTX), filed February 10, 2023; and

Entropic Communications, Inc. v. ViXS Systems, Inc., 3-13-cv-01102 (SDCA), filed May 8, 2023.

Pet. 89, Paper 5, 1–2 (Patent Owner's Mandatory Notices).

Patent Owner indicates that the following related patents are asserted in the above-referenced matters:

U.S. Patent No. 7,106,715;

U.S. Patent No. 7,594,249;

U.S. Patent No. 7,889,759;

U.S. Patent No. 8,085,802;

U.S. Patent No. 8,228,910;

U.S. Patent No. 8,320,566;

U.S. Patent No. 8,363,681;

U.S. Patent No. 8,411,565;

U.S. Patent No. 8,621,539;

U.S. Patent No. 8,631,450;

U.S. Patent No. 9,838,213;

U.S. Patent No. 10,257,566; and

U.S. Patent No. 10,432,422.

Paper 5, 2.

Patent Owner further indicates that Petitioner has requested the following *inter partes* reviews:

IPR2024-00373 (U.S. Patent No. 7,594,249)

IPR2024-00462 (U.S. Patent No. 7,889,759)

IPR2024-00546 (U.S. Patent No. 8,621,539).

Id. at 2–3.

D. The '518 Patent

The '518 patent is titled "Broadband Network for Coaxial Cable Using Multi-Carrier Modulation." Ex. 1001, code (54). The patent discloses a broadband local area network that uses coaxial cable wiring for interconnecting terminal devices. *Id.* at code (57). Orthogonal frequency division multiplexing (OFDM) with bit loading is used to overcome channel impairments to provide a path for terminal devices to transmit signals to and receive signals from other terminal devices. *Id.* Probe messages are used to characterize the channel between terminal devices to determine the optimum bit loading for the channel. *Id.*

Figure 2 of the '518 patent is shown below.

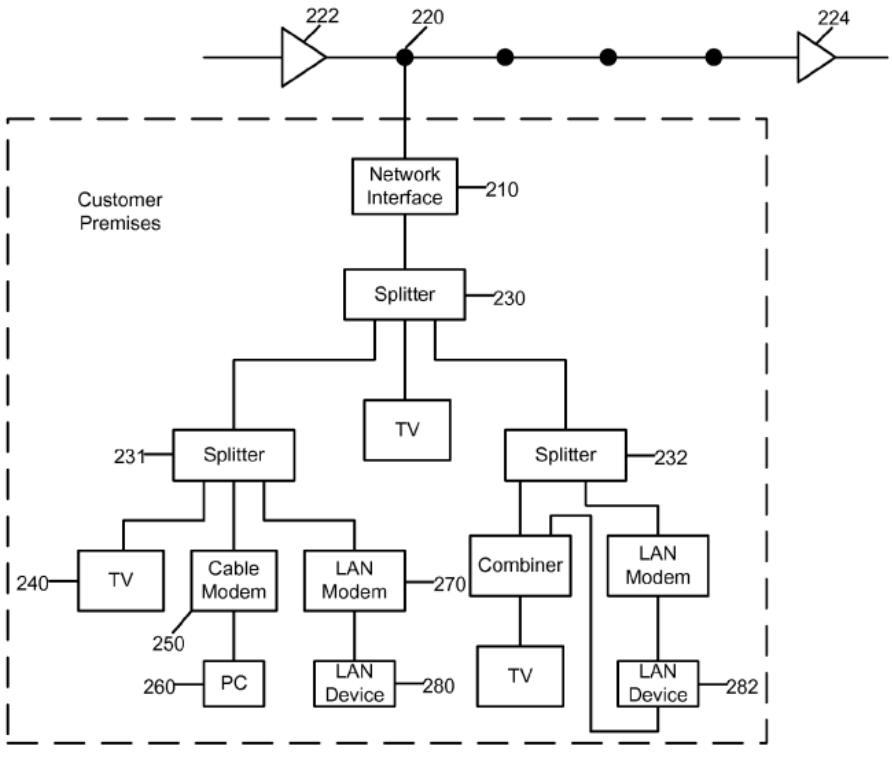

Fig. 2

Figure 2 depicts "a signal distribution plan" of the '518 patent. *Id.* at 5:12–13. LAN modem 270 modulates and demodulates a waveform transmitted over the cable, and has an interface to communicate with LAN

device 280, which is the source or destination of data transmitted over the LAN. *Id.* at 5:36–40. LAN device 280 can be a personal computer (PC) and LAN device 282 can be a modulator to produce a signal for driving a TV through a signal combiner. *Id.* at 5:40–43.

LAN devices 280 and 282 can be used for digital video or data services. *Id.* at 5:51–52. LAN device 282 can extract digital video data from a transport stream and produce a signal for a standard TV set. *Id.* at 5:52–56. Existing devices, such as TV 240, cable modem 250, and PC 260, use frequency bands distinct from the frequency band used by the LAN and operate in the normal manner. *Id.* at 5:57–60. The frequencies used by the LAN can be located above the standard cable frequencies. *Id.* at 5:61–63.

The ’518 patent describes multi-tone modulation as including discrete multi-tone (DMT) and OFDM. *Id.* at 7:20–27. The ’518 patent states that OFDM uses quadrature phase shift keying (QPSK) and multi-level quadrature amplitude modulation (QAM) in which each OFDM carrier is modulated using an amplitude/phase-varying signal. The modulated carriers are then summed together for transmission over the channel. *Id.* at 7:39–40.

The ’518 patent describes bit loading as a method of allocating higher order signal constellations for modulation to carriers that have higher signal-to-noise ratios, and lower order constellations for modulation to carriers that have lower signal-to-noise ratios. *Id.* at 8:9–26.

The ’518 patent further describes the use of probe messages transmitted between network devices to estimate channel characteristics. *Id.* at 9:35–41. The probe messages have a known bit sequence that can be used by the receiving device to compute a bit loading profile to send back to the transmitting device to use if the channel is asymmetric, or the receiving

device may calculate a bit loading profile for its own use if the channel is symmetric. *Id.* at 9:42–58.

E. Challenged Claims

Claim 1 is independent and claim 3 depends from claim 1. The claims are set forth below with Petitioner's limitation identifiers indicated in brackets.

> **[1pre]** A data communication network comprising:
>
> **[1a.i]** at least two network devices,
>
> **[1a.ii]** each network device comprising a multi-carrier modulator for modulating data, an up converter for translating the modulated data to an RF carrier frequency, a down converter for translating an RF signal, and a multi-carrier demodulator for demodulating the translated RF signal to produce data; and
>
> **[1b]** cable wiring comprising a splitter with a common port and a plurality of tap ports, and a plurality of segments of coaxial cable connecting between the splitter tap ports and the network devices;
>
> **[1c]** whereby network devices communicate with each other through the cable wiring using multi-carrier signaling;
>
> **[1d.i]** wherein network devices transmit probe messages through the cable wiring and analyze received probe message signals to determine channel characteristics and
>
> **[1d.ii]** bit loading is selected based on the determined channel characteristics.

Ex. 1001, 12:8–26.

Claim 3 is set forth below with Petitioner's limitation identifiers.

> **[3a]** The data communication network of claim 1 wherein the network shares the cable wiring with a cable television service
>
> **[3b]** and the network device up converter translates the modulated data to an RF carrier frequency above the frequency used by the cable television service.

Id. at 12:31–35.

F. Evidence of Record

Petitioner relies upon the following prior art references[3]:

Name	Reference	Date	Exhibit No.
Kliger	US 2002/0069417 A1	Published Jun. 6, 2002	1007
Isaksson	WO 98/10545	Published Mar. 12, 1998	1013
Amit	US 7,127,734 B1	Issued Oct. 24, 2006	1014
Jacobsen	Krista S. Jacobsen et al., *An Efficient Digital Modulation Scheme for Multimedia Transmission on the Cable Television Network*, 1994 NCTA Technical Papers, 305–312	Published Sept. 19, 1995	1016

Petitioner also supports its challenges with declarations from Dr. Tim Williams. Ex. 1004; Ex. 1036. Patent Owner supports its arguments for patentability with a declaration from Mr. Albert Garrett. Ex. 2002. Depositions of these declarants are in the record. Ex. 1039;

[3] Petitioner alleges that all of the prior art references were filed, issued or published before the '518 patent's earliest alleged priority date of August 30, 2001. Pet. 2. Petitioner contends that all of these prior art references are prior art under 35 U.S.C. §§ 102(b) and (e) (pre-Leahy-Smith America Invents Act, Pub. L. No. 112-29, 125 Stat. 284 (2011) ("AIA")). *Id.* Patent Owner does not refute these assertions.

Ex. 2003. The record also contains other documentary and testimonial evidence.

G. The Asserted Challenges to Patentability

Petitioner asserts the following challenges to patentability:

Ground	Challenged Claims	35 U.S.C. §	Reference(s)/Basis
1	1, 3	103(a)	Kliger, Isaksson
2	1, 3	103(a)	Amit, Jacobsen, Isaksson

Pet. 3.

II. ANALYSIS AND DISCUSSION

In this section, we discuss Petitioner's challenges to claims 1 and 3 of the '518 patent and Patent Owner's arguments for patentability. For the reasons that follow, we determine that Petitioner has shown by a preponderance of the evidence that claims 1 and 3 of the '518 patent are unpatentable.

A. Legal Standards for Obviousness

A patent claim is unpatentable under 35 U.S.C. § 103(a) if the differences between the claimed invention and the prior art are such that the claimed invention as a whole would have been obvious at the time the invention was made to a person having ordinary skill in the art to which the claimed invention pertains. *KSR Int'l Co. v. Teleflex Inc.*, 550 U.S. 398, 406 (2007). The question of obviousness is resolved on the basis of underlying factual determinations including: (1) the scope and content of the prior art; (2) any differences between the claimed subject matter and the prior art; (3) the level of ordinary skill in the art; and (4) where present,

objective evidence of nonobviousness.[4] *Graham v. John Deere Co.*, 383 U.S. 1, 17–18 (1966).

B. Level of Ordinary Skill in the Art

The person of ordinary skill in the art ("POSITA") is a hypothetical person who is presumed to know the relevant prior art. *In re GPAC Inc.*, 57 F.3d 1573, 1579 (Fed. Cir. 1995) (citing *Custom Accessories, Inc. v. Jeffrey-Allan Indus., Inc.*, 807 F.2d 955, 962 (Fed. Cir. 1986)). In determining the skill level, the Board may consider various factors including "the type of problems encountered in the prior art; prior art solutions to those problems; rapidity with which innovations are made; sophistication of the technology; and educational level of active workers in the field." *Id.* In a given case, every factor may not be present, and one or more factors may predominate. *Id.*

Petitioner defines the level of skill as follows:

> A POSITA would have a degree in electrical engineering, computer engineering, or a related field and experience working in signal processing and/or communication systems/networks, *e.g.*, a bachelor's and three or more years of experience; a master's and at least one year of experience; or a doctorate and some work experience. Additional education could substitute for professional experience, or *vice versa*.

Pet. 13 (citing Ex. 1004 ¶¶ 22–23).

Patent Owner's expert, Mr. Garrett, proposes the following skill level:

> In my opinion, a person of ordinary skill in the art ("POSITA") with respect to the '518 Patent would have had at least a bachelor's degree in electrical engineering, computer engineering, or an equivalent field with at least two years of experience with coaxial cables. I based my opinion on the

[4] The parties did not present any such objective evidence of obviousness or nonobviousness.

> disclosure of the ’518 Patent, including the title, the abstract, and the specification.

Ex. 2002 ¶ 37.

The parties’ proposed skill levels are similar except for the POSITA’s experience. Petitioner states that the POSITA’s experience should relate to “signal processing and/or communication systems/networks” whereas Patent Owner asserts it should include experience with “coaxial cables.”

Although Patent Owner points to various parts of the ’518 patent as supporting its proposal, other parts of the patent are not so limited. For example, the ’518 patent repeatedly mentions prior art patents disclosing communication techniques applied to twisted pair wiring, including discrete multi-tone (DMT) modulation and bit loading. Ex. 1001, 3:49–50, 3:67–4:2, 8:19–26. The patent further mentions that its data network overlays cable or satellite services. *See, e.g.*, *id.* at 5:1–6. Thus, a POSITA would not be limited to experience only with “coaxial cables” as opposed to work involving signal processing and/or communication systems/networks more generally.

The ’518 patent describes the “Technical Field” as “broadband communication networks and specifically . . . communications using coaxial cable building wiring.” *Id.* at 1:25–30. We find it appropriate here to use the broader statement of “broadband communication networks” as the field of a POSITA’s experience. The challenged claims of the ’518 patent relate to a “data communication network” comprising “cable wiring” with “segments of coaxial cable.” *Id.* at 12:16–19. This does not mean that the “cable wiring” is strictly coaxial—only that it includes segments that are.

Furthermore, the ’518 patent’s teachings are applicable to any network experiencing multipath reflections which degrade the ability to

achieve high data rates regardless of the media over which those signals are transmitted. *Id.* at 4:19–32.

Consequently, we determine the skill level as follows:

> A POSITA would have at least a bachelor's degree in electrical engineering, computer engineering, or a related field and two to three years of experience working in broadband communication networks. Additional education could substitute for professional experience, or *vice versa*.

For the foregoing reasons, our adopted skill level is consisted with the problems and solutions identified in the '518 patent and the prior art references asserted by Petitioner. In addition, we find the adopted skill level consistent with the education and experience that a POSITA would have had. Ex. 1004 ¶ 22; Ex. 2002 ¶ 37; Ex. 1036 ¶¶ 7–10.

C. Claim Construction

We construe the challenged claims under the same standard used by a federal court in a civil action under 35 U.S.C. § 282(b). 37 C.F.R. § 42.100(b). This standard is articulated in *Phillips v. AWH Corp.*, 415 F.3d 1303 (Fed. Cir. 2005) (en banc) and its progeny, and includes "construing the claim in accordance with the ordinary and customary meaning of such claim as understood by one of ordinary skill in the art and the prosecution history pertaining to the patent." 37 C.F.R. § 42.100(b).

Only claim terms in controversy need to be construed, and only to the extent necessary to resolve the controversy. *See Vivid Techs., Inc. v. Am. Sci. & Eng'g, Inc.*, 200 F.3d 795, 803 (Fed. Cir. 1999).

Petitioner contends that the challenged claims are "obvious under any reasonable interpretation," so "no express constructions are required." Pet. 3. Patent Owner does not offer construction of any claim term, so there

is no dispute over claim construction that we need to resolve. We apply the ordinary and customary meanings consistent with 37 C.F.R. § 42.100(b).

D. Ground 1: Obviousness over Kliger and Isaksson

Petitioner contends that claims 1 and 3 would have been obvious over the combination of Kliger and Isaksson. Pet. 13–41. Patent Owner disputes Petitioner's contentions. PO Resp. 13–32.

For the following reasons, we determine that Petitioner has shown by a preponderance of the evidence that claims 1 and 3 would have been obvious over the combination of Kliger and Isaksson.

1. Kliger (Ex. 1007)

Kliger is titled "Home Network System and Method" and "relates to communication networks . . . suitable for use in residential buildings." Ex. 1007, code (54), ¶ 2. Kliger implements its home network on "cable TV equipment . . . already installed in many homes." *Id.* ¶ 41, Fig. 1.

Kliger's Figure 1 is reproduced below.

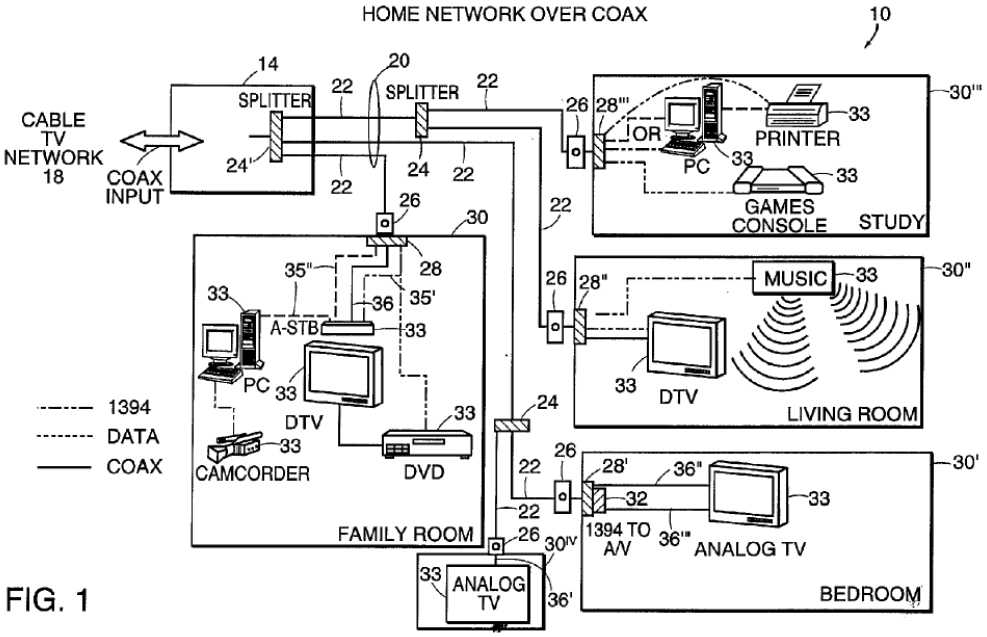

FIG. 1

Kliger's Figure 1 shows home network 10 with "demarcation point unit (DPU) 14 located at the entry point of a home, which operates as the interfaces between the home network 10 and an external network 18 such as a cable television (TV) network or the Internet." *Id.* ¶ 40. "DPU 14 is in communication with a plurality of home-network modules (HNM) 28, 28', 28'', 28''' (generally 28), each located in one of various rooms of the home." *Id.* "Each HNM 28 is the interface between devices in a room (e.g., home entertainment devices and computer devices) and the DPU 14." *Id.*

"HNMs 28 communicate with the DPU 14 and with each other over standard cable equipment" including "coaxial (or coax) cables 22, splitters (generally 24), and cable TV outlets 26." *Id.* ¶ 41. "Although the home network 10 can operate with existing coax wiring, the principles of the invention apply also to other types of wiring, such as CAT-5 or plastic fiber." *Id.* "In general, the home network 10 operates in parallel to cable TV services, leaving legacy cable TV signals and devices (such as set top boxes and cable modems) unaffected." *Id.*

"[I]n an exemplary embodiment of the home network 10, HNMs 28, 28', 28'', 28''' in respective rooms 30, 30', 30'', 30''' (generally 30) are connected to the home network backbone through cable TV outlets 26." *Id.* ¶ 43. "The home network backbone [20] includes a plurality of coax cables 22 that connect cable TV outlets 26, and thus the HNMs 28, to the DPU 14." *Id.* "The coax cables 22 connect to the splitters 24, which distribute the signals received from the external network 18 and from the HNMs 28 to each of the rooms 30 connected to the home network 10." *Id.*

"In each room 30 having a device 33 that the resident of the home wants to make available for intra-room communication, there is located a

HNM 28 that connects the device 33 to the backbone 20." *Id.* ¶ 44. "Each HNM 28 communicates with the DPU 14 and each other HNM 28 on the backbone 20 with analog signals and converts analog signals received from the DPU 14 and the HNMs 28 into digital signals for delivery to devices 33 connected to that HNM 28." *Id.* ¶ 47.

The HNMs communicate using "an efficient modulation scheme, like QAM, multi QAM, Orthogonal Frequency Division Multiplexing (OFDM) or Discrete Multitone (DMT)." *Id.* ¶ 73. "The use of efficient bandwidth modulations achieves higher data rates for a specific frequency band [and] produces less cross talk between potentially interfering signals." *Id.* A further advantage of the modulation employed by the HNM's modem 114 is it enables home network 10 to coexist with pre-existing low-quality splitters found in home cable networks which cause reflection and resulting inter-symbol interference (ISI). *Id.*

2. Isaksson (Ex. 1013)

Isaksson is titled "Improvements in, or Relating to, Multi-Carrier Transmission Systems." Ex. 1013, code (54). Isaksson discloses "multi-carrier transmission systems having the facility to dynamically change carrier bit-loading." *Id.* at 1:3–7.[5] Isaksson states that demand for multi-media and other services creates a need for high bit-rate traffic over copper pairs. *Id.* at 1:8–11. Isaksson further mentions transmission schemes such as ADSL and VDSL, and discloses that modulation systems for these transmission schemes may be DMT or OFDM. *Id.* at 1:11–18.

[5] Citations are to Isaksson's actual page and line numbering, not Petitioner's Bates numbering (to avoid mixing Bates page numbers and actual line numbers).

Isaksson further describes bit-loading techniques where the number of transmitted bits per symbol is adapted or regulated to the signal-to-noise ratio (SNR) of the current carrier wave. *Id.* at 3:24–27. Isaksson states that adapting the number of bits dynamically affects the total bandwidth of the system and requires synchronous configuration of the transmitter and receiver in terms of coded/decoded bits per symbol in order to maintain the connection. *Id.* at 3:29–34.

Isaksson's Figure 22 is reproduced below.

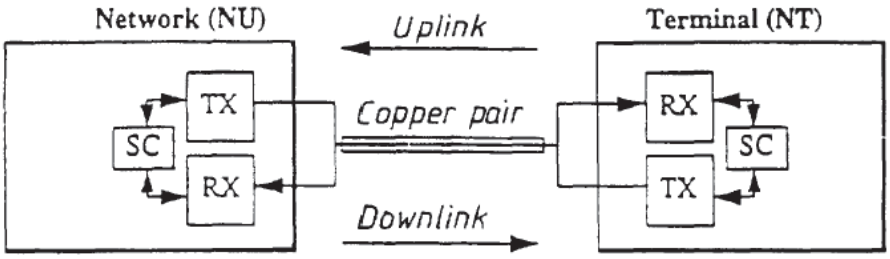

Isaksson states that Figure 22 is a schematic of two modems interconnected to create a multi-tone carrier transmission system. *Id.* at 19:20–24. Isaksson discloses that channel estimation may be carried out, by periodic transmission of one of the transceivers, using a base sync frame with predetermined content and comparing in the other transceiver the received sync frame with a reference frame. *Id.* at 16:8–12. The receivers in both transceivers then transmit the measurements to the transmitter in the uplink transceiver. *Id.* at 77:21–79:4.

Isaksson further discloses that bit-loading factors are calculated for each carrier based on signal-to-noise ratios. *Id.* at 5:14–6:1, 54:16–21. The "multi-carrier system is adapted to synchronously update, at said first and second transceivers, the bit loading parameters associated with each channel." *Id.* at 5:27–30, 54:13–21.

3. Analogousness of Isaksson

A reference is analogous art to the claimed invention if: (1) the reference is from the same field of endeavor as the claimed invention; or (2) the reference is reasonably pertinent to the problem faced by the inventor. *In re ICON Health and Fitness, Inc.*, 496 F.3d 1374, 1379–80 (Fed. Cir. 2007) (quoting *In re Clay*, 966 F.2d 656, 658 (Fed. Cir. 1992)); *In re Klein*, 647 F.3d 1343 (Fed. Cir. 2011).

Petitioner contends that "a POSITA would have understood that Kliger and Isaksson are analogous art to the '518 patent because they are from the same field of endeavor as the patent—wired networking systems—and because they are reasonably pertinent to the problem at issue in the patent—overcoming wired-network signal impairments." Pet. 27 (citing Ex. 1004 ¶¶ 76–80); Pet. Reply 3–12. Patent Owner disagrees with Petitioner's contention that Isaksson is analogous art. PO Resp. 12–26; PO Sur-Reply 16–25. For the following reasons, we determine that Petitioner has shown by a preponderance of the evidence that Isaksson is analogous art to the '518 patent because it is reasonably pertinent to the problems identified in the '518 patent.

The '518 patent seeks to overcome channel impairments by using probe messages to characterize the communication channel and determine optimum bit loading. Ex. 1001, code (57). These impairments include signal reflections, ISI, and signal attenuation. Pet. Reply 9–10 (citing Ex. 1001, 3:5–19). Similarly, Isaksson estimates channel characteristics by periodic transmission of a base sync frame from one transceiver to another where it is compared with a reference frame. Ex. 1013, 10. Isaksson's channel characteristics may include attenuation, phase shifting, and variance,

which are similar to the problems identified in the ’518 patent. *Id.* Both the ’518 patent and Isaksson address the problem of ISI by using bit loading to transmit data using sub-carriers less affected. Ex. 1001, 3:5–20; Ex. 1013, 16, 35, 79. Hence, we find the problems identified in the ’518 patent and Isaksson of how to overcome channel impairments reasonably pertinent such that Isaksson is analogous art to the ’518 patent.

We find unavailing Patent Owner’s arguments that the ’518 patent is specific to in-home networks with coaxial cables and splitters whereas Isaksson is restricted to twisted pair, point-to-point networks having no intervening devices and which are located outside of homes. PO Resp. 15–20; PO Sur-Reply 21–24. Any such differences do not change the fundamental nature of the problems of noise and interference affecting these environments. Such differences go more toward the field of endeavor than the reasonable pertinence of the problems each address. *See* Pet. Reply 10 (citing *Donner Tech., LLC v. Pro Stage Gear, LLC*, 979 F.3d 1353, 1360 (Fed. Cir. 2020)). Specifically, both the ’518 patent and Isaksson address the problem of channel impairments such as interference (e.g., ISI) and noise, and use the solution of bit loading to overcome them. *See, e.g.*, Ex. 1001, 4:42–47; Ex. 1013, 1:3–7, 6:17–20, 16:10–16, 79:5–14.

Hence, we find that the ’518 patent and Isaksson are analogous art because Isaksson is reasonably pertinent to the problems addressed in the ’518 patent notwithstanding Patent Owner’s arguments. We do not reach the question of whether the two are in the same field of endeavor.

4. Motivation to Combine Kliger and Isaksson

Petitioner contends that a POSITA would have been motivated to combine Kliger and Isaksson. Pet. 23–27; Pet. Reply 22–27. Patent Owner disagrees. PO Resp. 49–63; PO Sur-Reply 13–15.

We determine that Petitioner has shown by a preponderance of the evidence that a POSITA would have been motivated to combine Kliger with Isaksson for the following reasons.

Kliger identifies the problems of splitter reflections causing inter-symbol interference, external noise, and dynamic network conditions adversely affecting home network communications. Pet. 23–24 (citing Ex. 1007 ¶ 73; Ex. 1010, 5; Ex. 1004 ¶¶ 65–68). Isaksson teaches using multi-carrier modulation, such as DMT and OFDM, to address frequency dependent loss and noise using synchronized bit-loading based on carrier SNR. *Id.* at 24 (citing Ex. 1004 ¶ 69; Ex. 1013, code (57), 26:4–20). We agree with Petitioner that the combination of Kliger and Isaksson amounts to the use of known techniques (Isaksson's synchronized bit-loading) to improve similar devices in the same way (overcoming interference and maintaining connections with other modems). *Id.* at 26–27 (citing *KSR*, 550 U.S. at 415–421).

We do not agree with Patent Owner's argument that Kliger already solves the issues that Petitioner identifies such that a POSITA would not have looked to Isaksson's synchronized bit-loading. PO Resp. 50. Petitioner has established that Isaksson's solutions would improve Kliger's modulation by determining the number of bits-per-carrier based on SNR, disabling noisy carriers, and synchronizing bit loading. Pet. 23–28; Pet. Reply 23–24. Hence, a POSITA would have been motivated to improve

Kliger with Isaksson. *See KSR*, 550 U.S. at 417 ("if a technique has been used to improve one device, and a [POSITA] would recognize that it would improve similar devices in the same way, using the technique is obvious unless its actual application is beyond his or her skill").

Patent Owner alleges that Kliger's network is coaxial whereas Isaksson's is point-to-point, twisted pair with no intermediary devices such as splitters which would cause the interference, noise, and attenuation that the '518 patent addresses. PO Resp. 50–55. However, we do not agree that these alleged differences would have precluded a POSITA from making the combination of references. "Signal impairments such as reflections, noise, attenuation, and inter-symbol interference (ISI) are common challenges in nearly all communication mediums." Ex. 1036 ¶¶ 23–27. Communication networks experience these challenges, whether point-to-point or shared, twisted pair or coaxial, in-home or out-of-home, with or without splitters. *Id.*

As Petitioner's expert, Dr. Williams, puts it, "a POSITA can draw from the same toolbox of known solutions to address these impairments regardless of the medium." *Id.* ¶ 27. Among those solutions is Isaksson's approach of synchronized bit-loading. Moreover, Isaksson expressly states that "[i]t should be emphasized that the present invention can be used not only with the MUSIC system as herein described, but with *other multi-carrier systems* employing dynamic bit loading." Ex. 1013, 72:5–8 (emphasis added); Ex. 1004 ¶¶ 81–82. Hence, a POSITA would have been led to consider using Isaksson's synchronized bit-loading with Kliger's coaxial network which uses a multi-tone transmitter to determine whether to transmit power on each particular tone. *See, e.g.*, Ex. 1007 ¶ 166; Ex. 1013

1:1–7. Further facilitating the combination is Kliger's disclosure of using "a regular multi-tone transmitter (either OFDM or DMT) to determine whether to transmit power on each particular tone wherein tones can be silenced (which is, in effect, a form of bit-loading). *See, e.g.*, Ex. 1007 ¶¶ 6, 166, Fig. 1; Ex. 1013, 1:1–7, 3:24–34, 4:21–25, 16:8–12. In addition, Kliger expressly recognizes and seeks to address signal impairments caused by splitters, including poor signal isolation, return loss performance, degradation at higher frequencies, and inter-symbol interference due to reflections (the same problems the '518 patent addresses). Ex. 1007 ¶¶ 61, 73. Accordingly, a POSITA would have been motivated to combine teachings of Kliger and Isaksson.

Patent Owner argues that Petitioner did not explain how a control channel would exist across a coaxial splitter's multipath signal. PO Resp. 56–58 (citing Pet. 26; Ex. 1013, 73:4–15, 74:22–31, Fig. 33; Ex. 2002 ¶¶ 147–148). Patent Owner does not explain why it would be necessary to use Isaksson's control channel in Kliger, particularly when Kliger has its own control channel. Ex. 1007 ¶¶ 63–64, 166. Patent Owner's argument amounts to bodily incorporation of Isaksson in Kliger, which is not a proper approach to obviousness. *See In re Keller*, 642 F.2d 413, 426 (CCPA 1981).

We further disagree with Patent Owner's argument that Isaksson's base sync frames (equivalent to the claimed probe messages) would not function in Kliger's network. PO Resp. 58–60 (citing Pet. 26; Ex. 1007 ¶¶ 55–57; Ex. 1013, 24:8–28, Fig. 1; Ex. 2002 ¶¶ 149–154). Patent Owner's arguments are directed toward an embodiment of Isaksson that Petitioner did not cite in its Petition. Pet. Reply 26. In any case, Patent Owner does not establish that using Isaksson's base sync messages in Kliger's system would

have been beyond a POSITA's skill. *Id.* at 25–26 (citing Ex. 1036 ¶¶ 90–93).

Patent Owner argues that Isaksson's base sync frames would alter the principle of operation of Kliger because Kliger requires all devices to transmit fixed constellation size based on overall network characteristics rather than specific channel characteristics between each HNM. PO Resp. 60–63 (citing Ex. 1007, code (57), ¶¶ 40–44, 91, 99, Fig. 1; Ex. 1013, 3:24–27, 20:24–25, 26:14–17, 78:5–79:5, Fig. 36; Ex. 2002 ¶¶ 155–157). Patent Owner has not established, however, that fixed constellation size is a "principle of operation" of Kliger, or that Kliger would require substantial reconstruction or redesign to incorporate variable constellation sizes. *See In re Ratti*, 270 F.2d 810, 813 (CCPA 1959). We agree with Dr. Williams that a POSITA would have sought to improve Kliger with Isaksson's techniques. Ex. 1036 ¶ 95.

Patent Owner's Sur-Reply arguments are likewise unavailing. Petitioner's alleged mischaracterization of Patent Owner's arguments or confusion of an issue does not affect that Petitioner met its burden to demonstrate by a preponderance of the evidence that a POSITA would have been motivated to combine Kliger and Isaksson. PO Sur-Reply 14.

Although Patent Owner complains that Petitioner introduced a new theory on how to transmit base sync frames from Isaksson in its proposed combination, we understand Petitioner's argument to be responsive to Patent Owner's assertion that this could not be done, and the argument had basis in the Petition. *Id.*; Pet. 25–26; Pet. Reply 10–11; *see Rembrandt Diagnostics, LP v. Alere, Inc.*, 76 F.4th 1376, 1385 (Fed. Cir. 2023). We thus do not agree that Petitioner presented a new theory in its Reply.

Accordingly, for the foregoing reasons, we determine that Petitioner has shown by a preponderance of the evidence that a POSITA would have had reasons to combine Kliger and Isaksson.

5. Reasonable Expectation of Success

Petitioner contends that a "POSITA would have a reasonable expectation that the Kliger-Isaksson combination would produce a successful outcome." Pet. 27. Petitioner notes that Isaksson expressly extends its solutions to other systems, including Isaksson's coaxial network. *Id.* (citing Ex. 1013, 3:4–15, 72:5–8; Ex. 1004 ¶¶ 81–82). Petitioner also asserts that because Kliger's home network uses multi-carrier modulation, a POSITA would have reasonably expected Isaksson's teachings to work with Kliger's network. *Id.* (citing Ex. 1004 ¶¶ 83–84). Petitioner asserts that Isaksson's improvements would have been within the POSITA's skill because its multi-carrier modulation is used in many applications and taught in engineering courses that the POSITA would have taken. *Id.* at 27–28. Petitioner further asserts that using "Isaksson's improvements in Kliger's network would have predictably resulted in improved multi-carrier signaling between Kliger's HNMs, by controlling the bit-loading based on channel characteristics to overcome noise and synchronizing bit-loading parameters between the modems to maintain connectivity." *Id.* at 28.

Patent Owner does not present any arguments specific to Petitioner's assertion that a POSITA would have had a reasonable expectation of success in making the combination of Kliger and Isaksson.

Petitioner has shown by a preponderance of the evidence that a POSITA would have combined Kliger and Isaksson with a reasonable

expectation of success based on the teachings of the prior art and the education and experience the POSITA would have had.

6. Claim 1

We now address Petitioner's contentions that the combination of Kliger and Isaksson teaches or suggests each limitation of claim 1. Pet. 28–41. Patent Owner does not dispute Petitioner's contentions that the combination discloses each limitation of claim 1.

a) Preamble 1pre: Data Communications Network

The preamble of claim 1 recites "A data communication network comprising."

Petitioner contends that Kliger teaches a "network[] suitable for use in residential buildings" as shown in Kliger's Figure 1. Pet. 28–29 (citing Ex. 1007 ¶¶ 2, 40, 85–91; Ex. 1008, 5; Ex. 1009, 9) (emphasis omitted, alteration in original).

We find that Petitioner has shown by a preponderance of the evidence that Kliger's network discloses claim 1's preamble. Therefore, we need not decide whether the preamble is limiting.

b) Limitation 1a.i: Network Devices

Limitation 1a.i of claim 1 recites "at least two network devices." Petitioner contends that Kliger's "home network modules 28" (HNMs) disclose limitation 1.a.i. Pet. 29–30 (citing Ex. 1007 ¶¶ 10, 43, Fig. 1; Ex. 1008, 7, 10–11; Ex. 1011, 7; Ex. 1004 ¶¶ 92–97).

We find that Petitioner has shown by a preponderance of the evidence that Kliger's HNMs disclose claim 1's limitation 1.a.i.

c) Limitation 1a.ii: Modulator, Demodulator, Up Converter, Down Converter

Limitation 1a.ii recites "each network device comprising a multi-carrier modulator for modulating data, an up converter for translating the modulated data to an RF carrier frequency, a down converter for translating an RF signal, and a multi-carrier demodulator for demodulating the translated RF signal to produce data."

Petitioner contends that Kliger's HNMs disclose the features of limitation 1a.ii. Pet. 30–34 (citing Ex. 1007 ¶¶ 61, 65, 69–71, 73, 75, 78, 80, 81, Fig. 1; Ex. 1008, 7, 10; Ex. 1009, 4–6, 12–13; Ex. 1010, 4–5; Ex. 1004 ¶¶ 98–111).

Petitioner provides an annotated version of Kliger's Figure 4, shown below. *Id.* at 32.

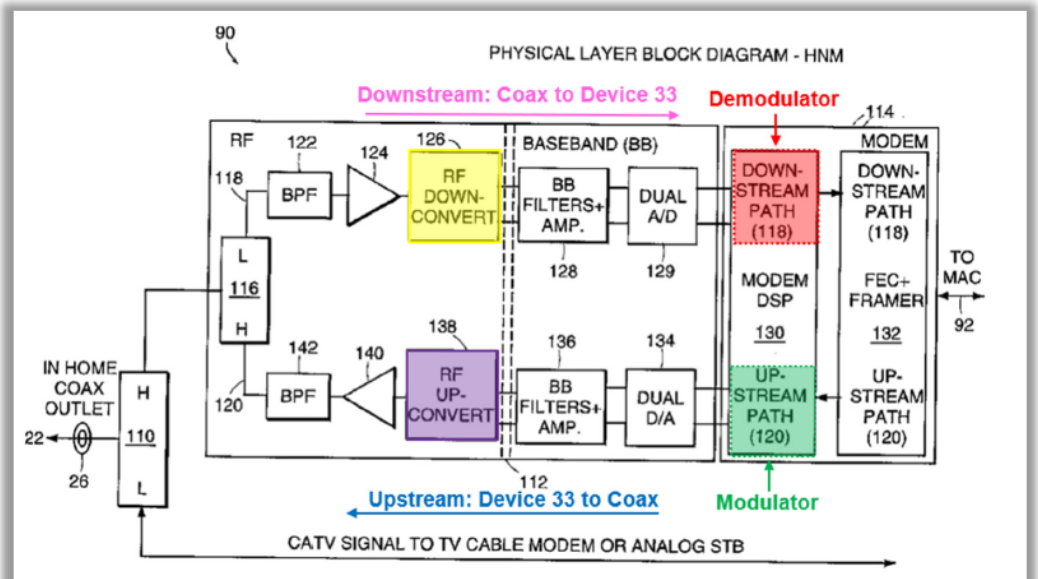

KLIGER FIG. 4 (Annotated); DISH-1010, 4

Petitioner's annotated Figure 4 shows that Kliger's HNM includes equivalents of the claimed multi-carrier modulator (green), up converter (purple), down converter (yellow), and multi-carrier demodulator (red).

We find that Petitioner has shown by a preponderance of the evidence that Kliger's HNMs include equivalents of the features recited in limitation 1a.ii and thus discloses the limitation.

d) Limitation 1b: Cable Wiring with Splitter

Limitation 1b recites "cable wiring comprising a splitter with a common port and a plurality of tap ports, and a plurality of segments of coaxial cable connecting between the splitter tap ports and the network devices."

Petitioner contends that Kliger discloses that the HNMs 28 communicate with DPU 14 and with each other over standard cable equipment including "coaxial (or coax) cables 22, splitters (generally 24), and cable TV outlets 26." Pet. 34–36 (citing Ex. 1007 ¶ 41, Figs. 1–2; Ex. 1008, 6–7; Ex. 1012, 5, 7; Ex. 1004 ¶¶ 112–117) (emphasis omitted).

Petitioner provides an annotated version of Kliger's Figure 1, shown below, to illustrate these features (*id.* at 35).

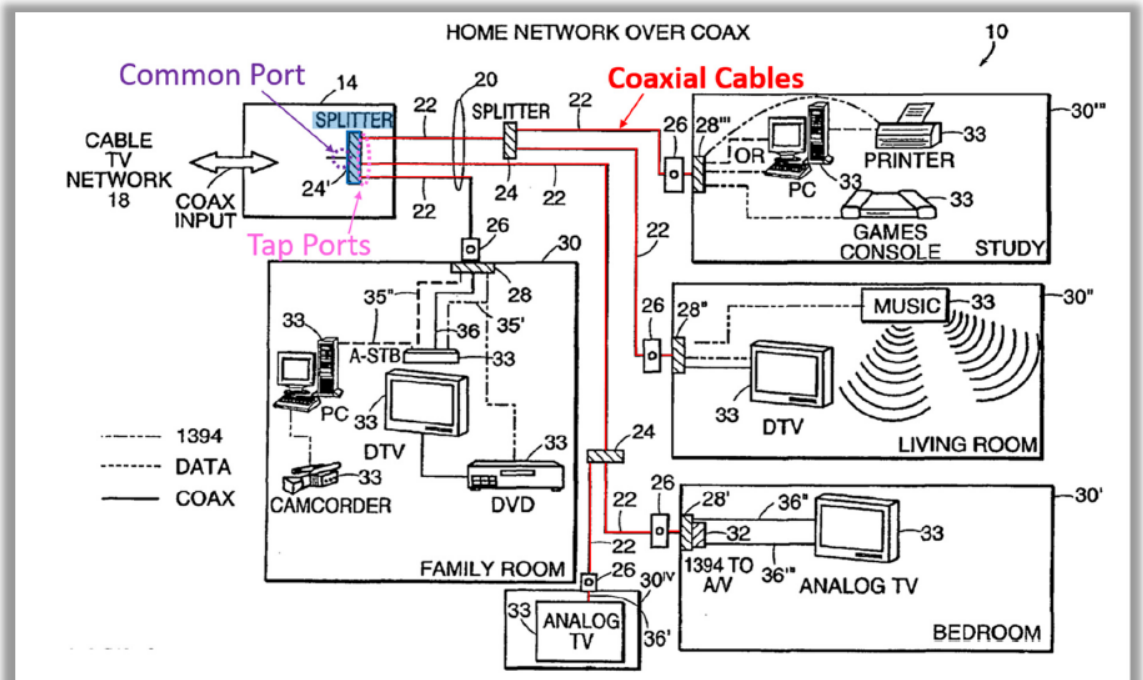

KLIGER FIG. 1 (Annotated); DISH-1008, 7

Petitioner's annotated Figure 1 shows segments of coaxial cables (red) and the demarcation point unit's splitter 24 (blue) with common port (purple) and tap ports (pink).

Petitioner provides an annotated version of Kliger's Figure 2, shown below (*id.* at 35).

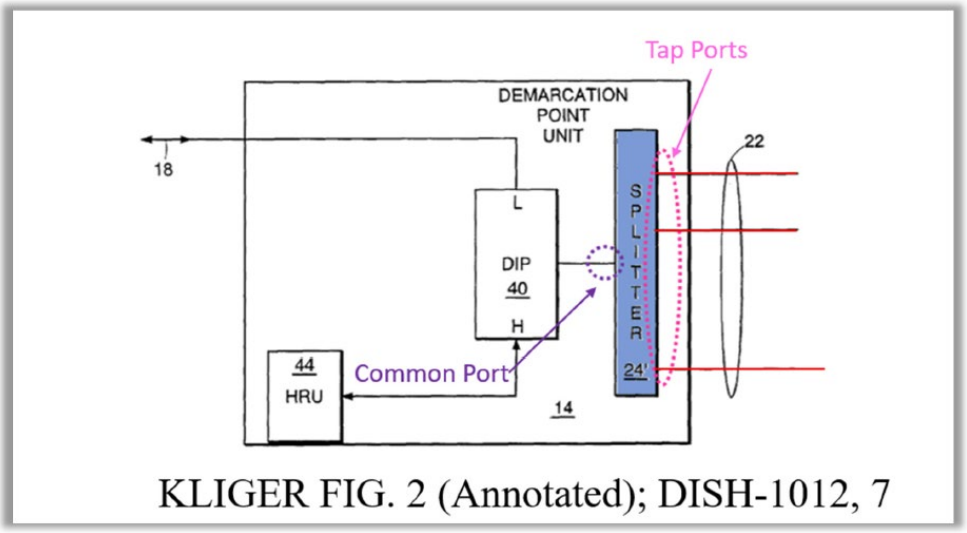

KLIGER FIG. 2 (Annotated); DISH-1012, 7

Petitioner's annotated version of Kliger's Figure 2 shows details of demarcation point unit (DPU) 14 including splitter 24 (blue), common port (purple) and tap ports (pink) connected to coaxial cable segments (red).

We find that Petitioner has shown by a preponderance of the evidence that Kliger's network discloses the features claimed in limitation 1b.

e) Limitation 1c: Multi-Carrier Signaling

Limitation 1c recites "whereby network devices communicate with each other through the cable wiring using multi-carrier signaling."

Petitioner contends that Kliger's HNMs communicate with each other through the coaxial cables and splitters using multi-carrier signaling. Pet. 36 (citing Ex. 1007 ¶¶ 41, 43; Ex. 1008, 7, 10; Ex. 1009, 6; Ex. 1004 ¶¶ 118–123); *see also id.* at 30–34 (discussing components of HNMs that perform multi-carrier signaling).

We find that Petitioner has shown by a preponderance of the evidence that Kliger's HNMs communicate with one another through the cable wiring using multi-carrier signaling, and thus Kliger discloses limitation 1c.

f) Limitation 1d.i: Probe Messages

Limitation 1d.i recites "wherein network devices transmit probe messages through the cable wiring and analyze received probe message signals to determine channel characteristics."

Petitioner contends that Isaksson's base sync frames are used to characterize channels, and are the equivalent of the claimed probe messages. Pet. 36–39 (citing Ex. 1013, 1:1–18, 4:1–8, 4:21–25, 10:10–14, 16:8–12, 16:15–20, 77:27–79:14, Fig. 22; Ex. 1004 ¶¶ 124–133).

Isaksson's Figure 22, annotated by Petitioner, is reproduced below (*id.* at 37).

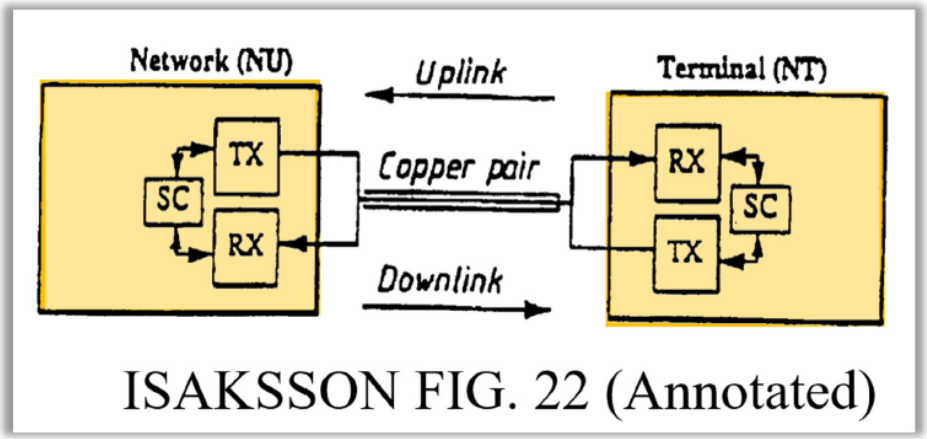

Petitioner's annotated Figure 22 shows Isaksson's multi-carrier transmission system that includes two multi-carrier transceivers/modems (orange), where each transceiver has a receiver and a transmitter. *Id.* at 37 (citing Ex. 1013, 1:1–18; Ex. 1004 ¶¶ 124–127). The transceivers estimate channel characteristics by periodic transmission of base sync frames of predetermined content, which the receiving transceivers compare to reference frames to determine channel attenuation, phase shift, and variance. *Id.* at 37–38 (citing Ex. 1013, 1:1–18, 4:1–8, 10:10–14, 16:8–12, 79:5–14; Ex. 1004 ¶¶ 124–128).

We determine that Petitioner has shown by a preponderance of the evidence that Isaksson's base sync frames are equivalent to the claimed "probe messages" and that the combination of Kliger and Isaksson discloses limitation 1d.i.

g) Limitation 1d.ii: Bit Loading Selected Based on Channel Characteristics

Limitation 1d.ii recites "bit loading is selected based on the determined channel characteristics."

Petitioner contends that Isaksson discloses this feature. Pet. 39–41. For example, Petitioner asserts that Isaksson's transceivers dynamically

change the number of coded/decoded bits per carrier wave by continuously measuring channel characteristics (such as frequency-dependent loss and noise), evaluating performance for each sub-channel (e.g., based on SNR), and reconfiguring the transmitted number of bits per symbol for each carrier wave. *Id.* (citing Ex. 1013, 3:24–27, 4:1–20, 16:8–12, 25:26–26:20, 77:27–79:14; Ex. 1004 ¶¶ 134–142).

We determine that Petitioner has shown by a preponderance of the evidence that the combination of Kliger and Isaksson discloses limitation 1d.ii.

h) Conclusion for Claim 1

Petitioner has shown by a preponderance of the evidence that Isaksson is analogous art to the ’518 patent, that a POSITA would have combined Kliger and Isaksson with a reasonable expectation of success, and that each limitation of claim 1 is taught or at least suggested by the combination.

Accordingly, Petitioner has demonstrated by preponderant evidence that claim 1 would have been obvious over the combination of Kliger and Isaksson notwithstanding Patent Owner’s arguments.

7. Claim 3

Petitioner contends that claim 3 would have been obvious over the combination of Kliger and Isaksson. Pet. 41. Patent Owner relies on its arguments for claim 1 from which claim 3 depends, and does not present any additional arguments regarding claim 3’s specific limitations. PO Resp. 7–8.

a) Limitation 3a: Shared Cable Wiring

Limitation 3a recites “[t]he data communication network of claim 1 wherein the network shares the cable wiring with a cable television service.”

Petitioner relies on Kliger's statement that "each HNM 28 permits those devices 33 connected to that HNM 28 to communicate with other devices 33 in different rooms 30, **to receive programming from the cable television**, and to have broadband access to the Internet." Pet. 41 (citing Ex. 1007 ¶ 50; Ex. 1008, 10–11; Ex. 1009, 5–6). Petitioner further contends that Kliger provides an example of a digital television in a home network 18 that combines the upstream signal with a CaTV signal for transmission over the home backbone. *Id.* (citing Ex. 1008, 10–11; Ex. 1012, 6; Ex. 1004 ¶¶ 143–145).

We find that Petitioner has shown by a preponderance of the evidence that limitation 3a is disclosed by Kliger.

b) Limitation 3b: RF Carrier Frequency above Cable Television Frequency

Limitation 3b recites "the network device up converter translates the modulated data to an RF carrier frequency above the frequency used by the cable television service."

Petitioner notes that Kliger discloses that the "CaTV signal (including the signal from Internet providers) is in the frequency range of 5 to 860 MHz" whereas the "home network signal transmitted over the home network backbone 20 is in the 960 to 1046 MHz frequency range, but other frequency bands above the CaTV signals can be used." Pet. 41 (citing Ex. 1007 ¶ 61; Ex. 1010, 5–6; Ex. 1004 ¶¶ 146–149) (emphasis omitted).

We find that Petitioner has shown by a preponderance of the evidence that Kliger discloses limitation 3b.

c) Conclusion for Claim 3

Petitioner has shown by a preponderance of the evidence that each limitation of claim 3 is disclosed by Kliger, and that claim 3 is unpatentable as obvious over the combination of Kliger and Isaksson.

E. Ground 2: Obviousness over Amit, Jacobsen, and Isaksson

Petitioner contends that claims 1 and 3 would have been obvious over the combination of Amit, Jacobsen, and Isaksson. Pet. 42–81. Patent Owner disagrees and presents arguments for patentability for this ground contending that Jacobsen is not prior art, that Isaksson is not analogous to the ’518 patent, and that a POSITA would not have been motivated to combine Amit, Jacobsen, and Isaksson. PO Resp. 12–26, 32–45.

We have already determined that Isaksson is analogous art to the ’518 patent. *See* § II.D.3, *supra*. We address the parties’ remaining contentions, and for the reasons that follow, determine that Petitioner has shown by a preponderance of the evidence that the challenged claims would have been unpatentable as obvious under § 103.

1. Amit (Ex. 1014)

Amit is titled “System and Methods for Home Network Communications.” Ex. 1014, code (54). Amit provides “a method and system which allows home networking over . . . coax cables.” *Id.* at 2:53–55.

Amit’s Figure 2 is shown below.

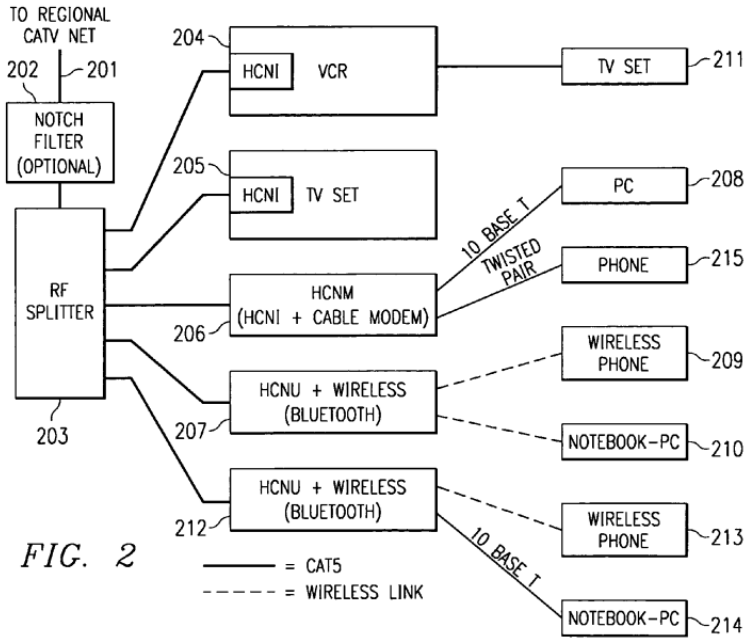

FIG. 2

Figure 2 shows Home Cable Networking (HomeCN/HCN) having five home networking devices (also called "nodes" or "home units") 204–207 and 212 connected to a regional CATV plant via cable 201. *Id.* at 2:13–17, 4:23–24, 6:24–26. Amit's nodes include a VCR 204 and TV Set 205 with Home Cable Networking Interfaces (HCNI). *Id.* at 6:44–46. Amit's nodes further include Home Cable Networking Modem (HCNM) 206, and Home Cable Networking Units (HCNUs) 207, 212. *Id.* at 6:3–23.

As shown in Figure 2, Amit's HCNUs are connected to home network equipment 209, 210, 213, 214 via various interfaces (e.g., 10BaseT, USB, and wireless). *Id.* at 6:7–13. The HCNU bridges or routes communications between the home cable networking (HCN) and other network interfaces. *Id.* at 6:11–13.

Also as shown in Figure 2, the HCNM includes an HCNU and a cable modem. *Id.* at 6:14–16. The HCNM provides connections between the HCN including home network equipment 208, 215 and the cable network

via interfaces (e.g., 10BaseT, USB, wireless, twisted pair). *Id.* at 6:14–18. The HCNUs and HCNM can communicate with each other by RF signaling over cable using reflection from RF splitter 203 to transmit signals back to the home network. *Id.* at 3:19–21, 6:29–41.

2. Jacobsen (Ex. 1016)

Jacobsen is an IEEE[6] article titled "An Efficient Digital Modulation Scheme for Multimedia Transmission on the Cable Television Network." Ex. 1016, 6.[7] Jacobsen "present[s] a comparison between the performances of single-carrier modulation with equalization and multicarrier modulation on simulated cable television (CATV) channels." *Id.* at 8. Jacobsen states that service providers at the time were investigating "[t]he feasibility of offering high-speed interactive data services to customers on CATV networks or similar broadband coaxial networks." *Id.* Jacobsen states that "there are several electrical transmission problems that must be overcome before these services can be supplied reliably over CATV networks." *Id.*

Jacobsen recognizes that "[t]aps, amplifiers, and splitters can all cause signals to be reflected at their insertion points." *Id.* Jacobsen states that these reflections can produce "[v]ariations in a channel's frequency response caus[ing] successively transmitted symbols to interfere with one another, an effect known as intersymbol interference (ISI)." *Id.*

Jacobsen teaches that multi-carrier modulation, such as DMT, may be used to combat ISI. *Id.* at 9, 11. Jacobsen states that "bits are originally assigned to subchannels just after training during system initialization in

---

[6] Institute of Electrical and Electronics Engineers.

[7] Citations are to Petitioner's Bates numbering rather than the actual page numbers of the article (because some pages of Jacobsen lack numbers).

direct proportion to the subchannel signal-to-noise ratios." *Id.* at 10. "As a result, subchannels that suffer from little attenuation and/or little noise carry the most bits, while subchannels that are severely attenuated and/or very noisy might not carry any bits." *Id.*

Jacobsen's Figure 1 is shown below.

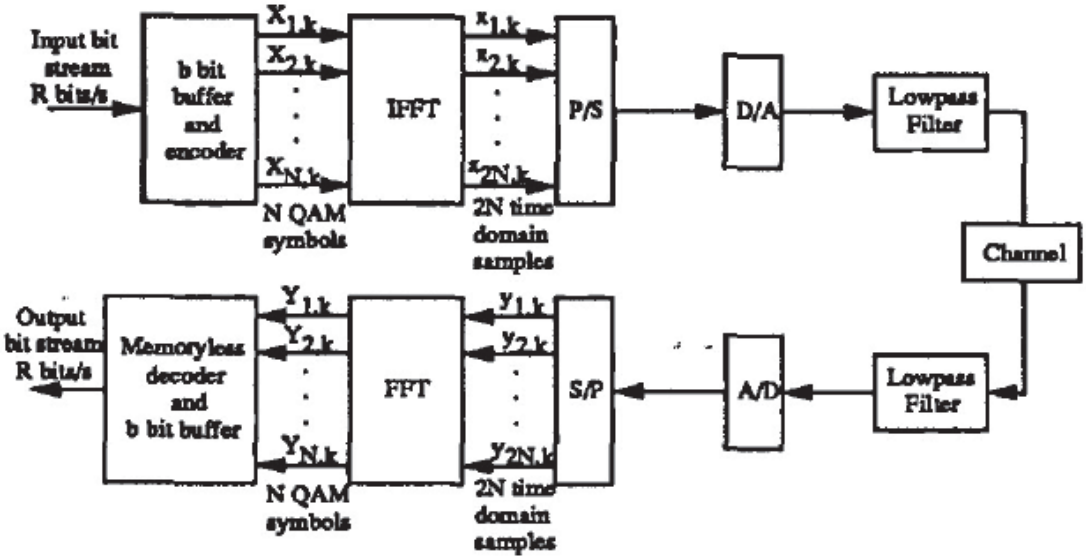

The components in the upper part of Jacobsen's Figure 1 constitute a DMT transmitter, and components in the lower part constitute a DMT receiver. *Id.* at 10.

3. Jacobsen's Status as Prior Art

"A reference is deemed publicly available if it has been 'disseminated or otherwise made available to the extent that persons interested and ordinarily skill in the subject matter or art, exercising reasonable diligence, can locate it.'" *Telefonaktiebolaget LM Ericsson v. TCL Corp.*, 941 F.3d 1341, 1346 (Fed. Cir. 2019) (citing *Jazz Pharm., Inc. v. Amneal Pharm., LLC*, 895 F.3d 1347, 1355 (Fed. Cir. 2018)). "Because there are many ways in which a reference may be disseminated to the interested public, 'public accessibility' has been called the touchstone in determining whether a

reference constitutes a 'printed publication.'" *In re Hall*, 781 F.2d 897, 898–99 (Fed. Cir. 1986).

The '518 patent issued from U.S. Patent Application 10/322,834 filed December 18, 2002. Ex. 1001, codes (21), (22). The '518 patent is a continuation of U.S. Non-Provisional Application 10, 230,687 filed August 29, 2002, and also claims priority to U.S. Provisional Applications 60/385,361 filed June 3, 2002, 60/363,420 filed March 12, 2002, and 60/316,820 filed August 30, 2001. *Id.* at code (60). The earliest possible priority date for the '518 patent is thus August 30, 2001.

Petitioner contends that Jacobsen was published no later than September 19, 1995, more than one year before the '518 patent's priority date of August 30, 2001, and is thus prior art under § 102(b). Pet. 44 (citing Ex. 1016, cover; Ex. 1006 ¶ 9).

As support for its assertion, Petitioner relies on the declaration of June Munford, a librarian. Ex. 1006 ¶¶ 1–3. She states that she retrieved a Machine-Readable Catalog ("MARC") record for the Jacobsen reference from the Linda Hall Library indicating that it was included in a 1994 edition of National Cable Television Association Technical Papers. *Id.* ¶¶ 7–9. She further indicates that the "008 field" of the MARC record indicates that Linda Hall Library first acquired the Jacobsen on September 19, 1995 and that it was made available to the public "shortly after" this date. *Id.* ¶ 9.

Patent Owner argues that Ms. Munford has training in information science and asserts that a POSITA without that training would not have been able to locate Jacobsen. PO Resp. 45 (citing Ex. 2004, 6:25–7:19; Ex. 2005, 11:2–7; *Blue Calypso, LLC v. Groupon, Inc.*, 815 F.3d 1331, 1348 (Fed. Cir. 2016)). Patent Owner further argues that Dr. Williams did not offer any

opinions on the public availability of Jacobsen, and that there is no testimony that any POSITA would know how to use MARC records. *Id.* at 46–47 (citing Ex. 2003, 72:15–24; *Voter Verified, Inc. v. Premier Election Sols., Inc.*, 698 F.3d 1374, 1380 (Fed. Cir. 2012)).

Petitioner replies that a second Munford Declaration removes all doubt that Jacobsen was publicly accessible to POSITAs before the critical date. Pet. Reply 22 (citing Ex. 1035 ¶¶ 3–18; *VidStream LLC v. Twitter, Inc.*, 981 F.3d 1060, 1065–67 (Fed. Cir. 2020)).

Patent Owner responds that neither the Reply nor Ms. Munford have provided any evidence that a POSITA would have been able to identify and locate Jacobsen. PO Sur-Reply 13. Patent Owner argues that Ms. Munford's testimony confirms that MARC records are editable and "cannot be the basis of public availability in a library for a serial publication as a 'MARC record does not tell us explicitly when a given issue of the periodical is made available.'" *Id.* (citing Ex. 2010, 22:7–21, 25:23–26:7, 23:17–26:19). Patent Owner further argues that Ms. Munford did not, and cannot, offer an opinion from the perspective of a POSITA because she is "wholly unaware of what that means in the context of this proceeding." *Id.* (citing Ex. 2010, 10:5–8, 10:13–22).

On this record, we find that Petitioner has shown by a preponderance of the evidence that Jacobsen was publicly accessible more than one year before the '518 patent. Jacobsen is thus § 102(b) prior art.

By its own terms, Jacobsen indicates that it is one of the National Cable Television Association ("NCTA") 1994 Technical Papers related to the 43rd Annual NCTA Convention and Exposition, New Orleans, Louisiana, May 22–25, 1994. Ex. 1016, 1–3, 6. This event and related papers address

topics that would have interested persons in the field as we define their skill level. *See* § II.B, *supra*. The event's listing of Jacobsen as one of the papers covered in the event schedule suggests that POSITAs attending this event would have had access to Jacobsen. Ex. 1016, 2–3.

The evidence further demonstrates that Jacobsen was acquired by the Linda Hall Library, Kansas City, Missouri, on September 19, 1995 and made available to the public shortly afterward. Ex. 1006 ¶ 9; Ex. 1035 ¶ 17. Availability to interested persons more than one year before the '518 patent is corroborated by other publications of Jacobsen, as well as Dr. Williams's testimony. Ex. 1006 ¶¶ 8, 27–28, Appendices; Ex. 1035 ¶¶ 3, 16, 18, Appendices; Ex. 1004 ¶ 157.

We do not agree with Patent Owner's arguments against Jacobsen. There is no requirement in the law for Ms. Munford to be an interested person or POSITA in order for her to testify about how the Linda Hall Library acquired and cataloged Jacobsen so that interested persons would be able to access it. Her testimony relates to the public accessibility of Jacobsen, not its technical content. *See, e.g.*, Ex. 1006 ¶ 9. She need not qualify as a POSITA to offer this testimony.

Ms. Munford further testified that MARC records are used by the public to discover materials within a library's collection, and that library users, which would include interested persons and POSITAs, do not require knowledge of how MARC records are maintained in order to use them. Ex. 1035 ¶ 8.

And even if MARC records are editable, as Patent Owner argues, Patent Owner has not shown that the MARC record for Jacobsen was

altered, and Ms. Munford states that such an alteration would have been "highly unusual" practice for a library. *Id.* ¶ 14.

Accordingly, Petitioner has shown by a preponderance of the evidence that Jacobsen was publicly accessible to interested persons more than one year before the '518 patent. It is thus § 102(b) prior art.

4. Motivation to Combine Amit, Jacobsen, and Isaksson

Petitioner contends that a POSITA would have been motivated to combine Amit, Jacobsen, and Isaksson. Pet. 47–54; Pet. Reply 18–22. Patent Owner disagrees. PO Resp. 36–44; PO Sur-Reply 2–13. We determine that Petitioner has shown by a preponderance of the evidence that a POSITA would have been motivated to combine Amit, Jacobsen, and Isaksson for the following reasons.

Petitioner contends that Amit discloses there may be problems associated with reflection from splitters and other devices in its home network. Pet. 47 (citing Ex. 1014, 13:54–14:1, 20:42–43). Amit further discloses that varying channel conditions may require different modulation. *Id.* at 47–48 (citing Ex. 1014, 8:30–32; Ex. 1004 ¶ 165).

Petitioner further asserts that Jacobsen similarly observes that taps, amplifiers, and splitters can cause signal reflections and that resulting variations in frequency response cause successively transmitted symbols to interfere with one another, an effect known as inter-symbol interference (ISI). *Id.* at 48 (citing Ex. 1016, 8; Ex. 1004 ¶ 166). Petitioner argues that Jacobsen teaches that multi-carrier modulation reduces effects of distortion on a cable television (CATV) network, easily adapts to a variety of channel degradations, and is more computationally efficient than single-carrier modulation with equalization. *Id.* (citing Ex. 1016, 8–9; Ex. 1004 ¶ 167).

In addition, Petitioner asserts that "Jacobsen's findings that multi-carrier modulation provides advantages over single-carrier for digital communications over coaxial networks" would have motivated a POSITA "to replace [Amit's] single-carrier modulation in Amit's HomeCN with Jacobsen's multi-carrier signaling to overcome potential signal impairments in the HomeCN." *Id.* at 49–50 (citing Ex. 1016, 15; Ex. 1004 ¶ 173).

Furthermore, Petitioner contends that, like Jacobsen, Isaksson teaches multi-carrier modulation with bit loading based on channel characteristics. *Id.* at 51 (citing Ex. 1013, 1:19–26, 3:24–34; Ex. 1004 ¶ 177). Petitioner further states that Isaksson's bit-loading causes time variation of system bandwidth, which imposes a "requirement for synchronous configuration of the transmitter and the receiver, in terms of the number of coded/decoded bits per symbol and carrier wave. If this requirement is not met, the system will be unable to maintain a connection." *Id.* at 51 (citing Ex. 1013, 3:24–34). Petitioner asserts that "Isaksson's solution involves transceivers sending and measuring base sync frames (i.e., "channel probes") to determine channel characteristics for configuring bit-loading." *Id.* (citing § IV.A.2; Ex. 1004 ¶ 178).

Petitioner contends that a "POSITA would have been motivated to improve the Amit-Jacobsen HomeCN with Isaksson's synchronized bit-loading" in order "to maintain connections between Amit's HCN devices." *Id.* at 52 (citing Ex. 1004 ¶¶ 179–181). Petitioner further asserts that a "POSITA reading Amit's and Jacobsen's teachings about coaxial networks would have been motivated to improve such networks with methods used in related wired networks, such as Isaksson's." *Id.* at 53 (citing Ex. 1014,

28:67, 2:24–30). Petitioner alleges that Isaksson recognizes that its features can extend to coaxial networks. *Id.* (citing Ex. 1013, 1:8–18, 3:4–15).

Petitioner contends that a POSITA would have considered the Amit-Jacobsen-Isaksson combination to be the use of known techniques (Isaksson's synchronized bit-loading) to improve similar devices (Amit-Jacobsen's HCN devices) in the same way (overcoming interference and maintaining connections with other HCN devices). Pet. 53–54 (citing *KSR*, 550 U.S. at 415–21; Ex. 1004 ¶¶ 182–184).

Patent Owner argues that Amit solves the problem of reflections by separating the frequencies of upstream and downstream signals using a module, and does not require additional modification. PO Resp. 27–28 (citing Ex. 1014, 20:42–43, 20:26–31; Ex. 2002 ¶ 85). Nonetheless, we agree with Petitioner that a POSITA would not have been restricted to Amit's solution and would have looked for other ways to address problematic reflections and varying channel conditions affecting home network communications. *See KSR*, 550 U.S. at 420 ("any need or problem known in the field of endeavor at the time of the invention, and addressed by the patent can provide a reason for combining elements in the manner claimed"); *In re ICON Health*, 496 F.3d at 1380–1381 ("[A POSITA] would naturally look to prior art addressing the same problem as the invention at hand"; "analogous art . . . goes a long way towards demonstrating a reason to combine the . . . references.").

Patent Owner further argues that Amit's reflections are beneficial to achieve on-premises communication, and a POSITA would not look to Jacobsen's teachings to reduce those reflections. PO Resp. 30–31 (citing Ex. 1014, 3:37–42, 6:41–44, cl. 12, 14:1–7; Ex. 2002 ¶¶ 92–94). However,

as Patent Owner concedes, Amit also discloses that there are "houses where there is a problem with reflection." *Id.* at 30 n.5 (citing Ex. 1014, 13:54–14:1, 20:42–43). Amit thus teaches that reflections can be beneficial or deleterious, depending on the circumstances.

In addition, Patent Owner argues that the addition of Jacobsen's multi-carrier modulation frustrates Amit's goal to lower cost and complexity. *Id.* at 31–36 (citing Ex. 1014, 2:40–43; Ex. 2002 ¶¶ 95–96); PO Sur-Reply 3–8. According to Patent Owner, Amit's goal of providing a simple, low-cost home network is reflected in Amit's design choices, including "low-cost implementation" and using "low-cost devices." PO Resp. 32–33 (citing Ex. 1014, 1:67–2:3, 2:40–43, 2:53–56, 3:15–18, 3:49–53, 4:1–8, 4:37–39, 8:30–37, 9:53–55, 10:8–9, 17:10–11, 17:33–35, 18:24–34, 19:46–48, 21:44; Ex. 1004 ¶ 156; Ex. 2002 ¶¶ 97–98). Patent Owner argues that combining Jacobsen's multi-carrier modulation contradicts Amit because it would increase costs and complexities through added hardware, operational costs (due to power consumption), and complexity (due to adding fast Fourier transform, larger DACs and ADCs, and RF hardware to accommodate dynamic range and compensation algorithms). *Id.* at 33–36 (citing Ex. 1014, 8:30–33; Ex. 2002 ¶¶ 95–96, 99–102).

However, Petitioner shows that adding Jacobsen's multi-carrier modulation to Amit's system would not frustrate Amit's goals. Pet. Reply 15–17. Petitioner indicates the costs and benefits in making the combination should be weighed against one another, and asserts that Patent Owner only focuses on the drawbacks. *Id.* at 15 (citing *Winner Int'l Royalty Corp. v. Wang*, 202 F.3d 1340, 1349 n.8 (Fed. Cir. 2000)). Petitioner contends that it was known that costs could be lowered by dividing channels into

subchannels, segmenting subchannels into disjointed groups, decreasing FFT size, and reducing the number of active channels. *Id.* at 15–16 (citing Ex. 1023, 374, 378–79; Ex. 1036 ¶¶ 68–70). According to Petitioner, Patent Owner's expert, Mr. Garrett, exaggerated power concerns by using a specialized form of multi-carrier modulation (OFDM) which is not required by the challenged claims, and that his methodology was unreliable because it relied on his recollections despite not having worked in the field since 2019. *Id.* at 16 (citing Ex. 1014, 8:30–33; Ex. 1039, 92:7–11, 92:14–21; Ex. 2002 ¶¶ 95–96, 99–102). Petitioner contends that Mr. Garrett did not consider cost-savings techniques such as lowering the FFT size, nor did he account for how Jacobsen's modulation alleviates problems with frequency-domain ripple and interferers, improves computational efficiency, improves transmission efficiency, and achieves high spectral efficiencies, each of which can offset power increases. *Id.* at 16–17 (citing Ex. 1039, 88:14–16; Ex. 1016, 10, 15; Ex. 1023, 374; Ex. 1031, 443; Ex. 1036 ¶¶ 71–72). Petitioner further asserts that Amit's modulation architecture is implemented in silicon and the costs of scaling to multi-carrier modulation would not have been significant. *Id.* at 17 (citing Ex. 1023, 379; Ex. 1036 ¶ 73).

Patent Owner replies that Mr. Garrett's analysis concerning power consumption was not limited to OFDM. PO Sur-Reply 4. Patent Owner further asserts that Mr. Garrett's example was from his industry experience using typical operating conditions, and established that Jacobsen frustrates Amit's goals by adding operational costs via increased power consumption. *Id.* at 4–6 (citing Ex. 1039, 90:6–10, 90:15–91:1, 91:20–92:16; Ex. 2002 ¶ 101).

We find Patent Owner's arguments unavailing to overcome Petitioner's showing that a POSITA would have recognized overall benefits from the combination. Pet Reply 16–17. For example, Patent Owner does not address the benefits resulting from the measures that Petitioner contends a POSITA would have known to use to reduce costs and complexities in the combination (reduced FFT size, alleviation of frequency-domain ripple and interferers, improved computational efficiency, improved transmission frequency, and high spectral efficiencies). *Id.*

Patent Owner further criticizes Petitioner's expert, Dr. Williams, for failing to consider disadvantages caused by the proposed combinations, or to weigh them against purported advantages, in conducting his analysis. PO Sur-Reply 6–8 (citing Ex. 2008, 23–25; Ex. 2009, 29:24–32:11, 31:18–32:11, 33:9–34:15; Ex. 1036 ¶ 6). Dr. Williams indicates, however, that "a POSITA properly weighing the benefits, both lost and gained, would implement Jacobsen's multi-carrier modulation in Amit's network." Ex. 1036 ¶ 70, *see also id.* ¶¶ 68–69, 71–73.

We agree with Petitioner that a POSITA, weighing the benefits and drawbacks of implementing Jacobsen's multi-carrier modulation in Amit, would have found the combination overall beneficial in at least some circumstances. Pet. Reply 17–18 (citing *Grit Energy Sols., LLC v. Oren Techs., LLC*, 957 F.3d 1309, 1323–24 (Fed. Cir. 2020)).

Patent Owner further argues that a POSITA would not have been motivated to combine Amit and Jacobsen with Isaksson to achieve synchronized base sync messages. PO Resp. 36–44. Specifically, Patent Owner argues that Isaksson's base sync frames would not function on Amit's shared medium, and Isaksson does not extend to coaxial cables. *Id.*

at 36 (citing Ex. 2002 ¶¶ 105, 108). Patent Owner argues that Isaksson provides a two node, full-duplex system whereas Amit is a half-duplex, unsynchronized system. *Id.* at 37–39 (citing Ex. 1013, Fig. 33; Ex. 1014, 27:2–3; Ex. 2003, 61:11–14, 63:10–24, 74:22–31, 75:4–15; Ex. 2002 ¶¶ 104–107). Patent Owner further criticizes Petitioner for not mentioning a control channel which Isaksson describes as an "absolute requirement." *Id.* at 38 (citing Ex. 2002 ¶ 106).

Petitioner replies that Isaksson's base sync frames would function in Amit's network. Pet. Reply 18–19. Specifically, Petitioner asserts that incorporating signaling from a full-duplex system into a half-duplex system is within a POSITA's capabilities, and that a POSITA would treat base sync frames as a message allocated to the control aspects of the Amit-Jacobsen network. *Id.* at 18 (citing Ex. 1036 ¶¶ 74–75). Petitioner argues that Amit's communication protocol uses management messages for control messaging and a POSITA would have used these messages to implement Isaksson's base sync frames in Amit. *Id.* (citing Ex. 1036 ¶¶ 76–77; Ex. 1038, 606–609). We agree with Petitioner that a POSITA would have implemented Isaksson's base sync frames in Amit's network, particularly when Amit already uses management messages suitable for this purpose.

Petitioner further notes that Isaksson teaches that its system can be used with "other multicarrier systems employing bit loading," which suggests its combination with Amit's coaxial system. *Id.* at 19 (citing Ex. 1013, 72:5–8; Ex. 1036 ¶ 79). Isaksson expressly discloses the distribution of VDSL signals over coaxial cables, implying Isaksson's base sync frames could be used in Amit's coaxial network. *Id.* at 20 (citing Ex. 1039, 18:18–19:15, 109:4–22; Ex. 1036 ¶ 81).

Patent Owner further argues that neither Amit nor Jacobsen suffer from failing to provide synchronized bit loading, and asserts that Jacobsen already provides this feature, so a POSITA would not make the combination. PO Resp. 43–44 (citing Ex. 1013, 3:29–34; Ex. 1016, 10; Ex. 2003, 61:22–62:11; Ex. 2002 ¶¶ 119–123). We agree with Petitioner, however, that even if Jacobsen teaches synchronism, a POSITA would still look to Isaksson for details on how to implement synchronism. Pet. 21–22 (citing Ex. 1036 ¶ 84; *Unwired Planet, LLC v. Google Inc.*, 841 F.3d 995, 1003–1004 (Fed. Cir. 2016)).

Accordingly, we determine that Petitioner has shown by a preponderance of the evidence that a POSITA would have been motivated to combine Amit, Jacobsen, and Isaksson notwithstanding Patent Owner's arguments.

5. Reasonable Expectation of Success

Petitioner contends that a POSITA would have a reasonable expectation in making the combination of Amit, Jacobsen, and Isaksson. Pet. 54–56. Specifically, Petitioner contends that a POSITA would have had a reasonable expectation of success because Amit and Jacobsen similarly describe coaxial networks, and because single carrier and multi-carrier modulation were known techniques that would have been straightforward for a POSITA to implement. *Id.* at 54–55 (citing Ex. 1004 ¶¶ 185–187, 192–197; Ex. 1017; Ex. 1018; Ex. 1022; Ex. 1014, 8:30–33, 25:1–10). Petitioner further contends that Jacobsen describes how to implement multi-carrier modulation. *Id.* at 50.

Petitioner asserts that the Amit-Jacobsen combination teaches multi-carrier modulation, and applying Isaksson's multi-carrier teachings would

have been using known techniques to improve similar devices in the same way. *Id.* at 55 (citing *KSR*, 550 U.S. at 415–421; Ex. 1013, 72:5–8; Ex. 1004 ¶ 188). Petitioner notes that Isaksson states that its disclosure can be used with other multi-carrier systems than those described. *Id.* (citing Ex. 1013, 72:5–8; Ex. 1004 ¶ 188).

Petitioner alleges that a POSITA would have expected Isaksson's multi-carrier improvements to work in the Amit-Jacobsen network because Jacobsen already employed bit loading calculated in initial training, and adapted the number of transmitted bits according to the subchannel signal-to-noise (SNR) ratio. *Id.* at 55–56 (citing Ex. 1013, code (57), 54; Ex. 1016, 8, 10; Ex. 1004 ¶¶ 189–190).

Petitioner further contends that using Isaksson's improvement is "a straightforward adaptation that permits dynamic adjustments to bit-loading to maintain synchronism between devices on the network." *Id.* at 56 (citing Ex. 1013, 3:23–34; Ex. 1004 ¶ 191). Petitioner contends that "[i]mplementing Isaksson's improvements would have been within the skill level of a POSITA because . . . multi-carrier modulation is used in many applications and taught in courses that a POSITA would have taken." *Id.*

Although Patent Owner asserts that a POSITA would not have expected success in implementing the combination, Patent Owner provides no specific reasons to support its general assertion. PO Resp. 26 (citing Ex. 2002 ¶¶ 80–81).

We determine that Petitioner has shown by a preponderance of the evidence that a POSITA would have had a reasonable expectation of success in combining Amit, Jacobsen, and Isaksson due to their similarities and teachings, and the knowledge and skill a POSITA would have had.

6. Claim 1

We now address Petitioner's contentions that the combination of Amit, Jacobsen, and Isaksson teaches or suggests each limitation of claim 1. Pet. 56–80. Patent Owner does not dispute Petitioner's contentions that the combination discloses each limitation of claim 1.

a) Preamble 1pre: Data Communications Network

The preamble of claim 1 recites "A data communication network comprising."

Petitioner contends that "Amit's Home Cable Network (HomeCN or HCN) 'allow[s] very high-speed digital and analog communications within the home and from the home to external devices or networks.'" Pet. 56 (citing Ex. 1014, 1:10–12, 2:40–43) (emphasis omitted, alteration in original). Petitioner contends that Amit's Figures 2 and 13 (annotated by Petitioner) show examples of the HomeCN corresponding to the claimed "data communication network." *Id.* at 56–57 (citing Ex. 1014, 3:10–13, 3:19–21, 6:58–60, Figs. 2, 9, 13 (annotated); Ex. 1004 ¶¶ 198–200).

We find that Petitioner has shown by a preponderance of the evidence that Amit's HCN is a data communication network, and thus discloses claim 1's preamble. Therefore, we need not decide whether the preamble is limiting.

b) Limitation 1a.i: Network Devices

Limitation 1a.i of claim 1 recites "at least two network devices."

Petitioner contends that Amit's HomeCN includes at least two HCN devices to enable networking over coaxial cables. Pet. 59 (citing Ex. 1014, 3:10–12). According to Petitioner, the HCN devices include Home Cable Networking Units (HCNUs) and Home Cable Networking Modems

(HCNMs) 206, 207, 212 shown in Figures 2 and 13 (annotated by Petitioner). *Id.* at 59–60 (citing Ex. 1014, 6:7–16, 6:3–23, 6:57–60; Ex. 1004 ¶¶ 204–210).

We find that Petitioner has shown by a preponderance of the evidence that Amit's HCN devices including HCNUs and HCNMs disclose the limitation 1a.i.

c) Limitation 1a.ii: Modulator, Demodulator, Up Converter, Down Converter

Limitation 1a.ii recites "each network device comprising a multi-carrier modulator for modulating data, an up converter for translating the modulated data to an RF carrier frequency, a down converter for translating an RF signal, and a multi-carrier demodulator for demodulating the translated RF signal to produce data."

Petitioner contends that Amit's "HomeCN is a data communication network in which the HCN devices, including HCNUs and HCNMs, communicate with each other, *e.g.*, to deliver data from one device to another." Pet. 62.

Petitioner further contends that Amit's HCN devices communicate using RF signaling over the HomeCN's coaxial cables. *Id.* (citing Ex. 1014, 3:19–21). Petitioner asserts that the frequency range of the RF signaling, or RF carrier frequency, can be 900–960 MHz. *Id.* (citing Ex. 1014, 3:24–27, 8:21–29). Petitioner contends that each HCN device includes transmitter (TX) and receiver (RX) circuitry that enables the device to communicate using RF signaling. *Id.* at 62–63 (citing Ex. 1014, 29:10–21, Figs. 18, 19; Ex. 1004 ¶¶ 211–215, 221).

Petitioner contends that Amit's HCN device circuitry includes frequency converters, including the claimed "up converter" and "down

converter." *Id.* at 62–64 (citing Ex. 1014, 3:24–30, 11:61–65, 19:32–37, Fig. 11 (annotated); Ex. 1004 ¶ 216)). Petitioner provides the following annotated version of Amit's Figure 11 to show the claimed "up converter" and "down converter." *Id.* at 64.

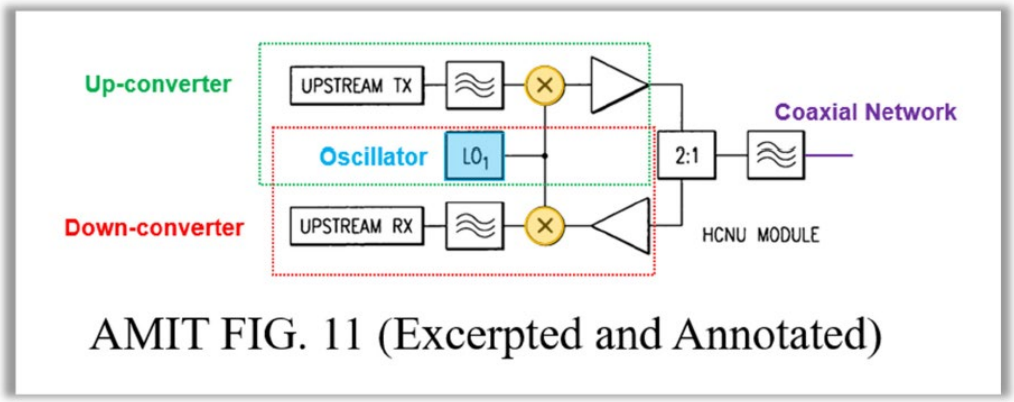

Amit's Figure 11 as annotated shows the components of an HCNU module including up-converter (green) and down-converter (red) connected to a coaxial network (purple). Petitioner states that, to transmit a signal, Amit's upstream TX block obtains data that originates from a node (e.g., a PC) connected to the HCN Device. *Id.* (citing Ex. 1004 ¶ 217). The TX signal is up-converted by multiplier/local oscillator (LO) blocks, amplified, and transmitted on the coaxial network (the claimed "translating . . . data to an RF carrier frequency"). *Id.* (citing Ex. 1004 ¶ 217) (alteration in original).

Petitioner contends that, to receive a signal, Amit's multiplier/LO blocks down-convert an RF signal received over the coaxial network (the claimed "translating an RF signal"), which the upstream RX block routes to the node. *Id.* (citing Ex. 1014, 20:32–35; Ex. 1004 ¶ 217).

Petitioner contends that a POSITA would have understood that it is well known in the art that Amit's Figure 11 depicts frequency conversion

circuitry. *Id.* at 64–66 (citing Ex. 1017, 93, 99–100, Fig. 3.6a; Ex. 1004 ¶¶ 218–220).

Petitioner contends that Amit discloses the claimed "modulator" and "demodulator." Pet. 66–68. Specifically, Petitioner asserts that each HCN device includes a modulator that employs QPSK, QAM 16, QAM 64 or QAM 256 according to channel conditions and equipment capabilities. *Id.* at 66 (citing Ex. 1014, 3:7–8, 3:19–20, 8:30–37). Petitioner states that, because Amit's HCN devices are transceivers, a POSITA would have understood that each HCN device includes a modulator providing "modulated data to the up-converter to be up-converted to the RF carrier frequency for transmission on the coaxial network," and a demodulator for performing the "inverse of the up-converter operations." *Id.* at 66–67 (citing Ex. 1014, Fig. 11; Ex. 1004 ¶¶ 222–227). Petitioner's declarant, Dr. Williams, contends that transmitter and receiver architectures in cable modems that operate on coaxial networks were known to a POSITA. *Id.* at 67 (citing Ex. 1004 ¶¶ 230–231; Ex. 1019). Petitioner thus contends that Amit discloses the claimed "modulator for modulating data" and "demodulator for demodulating the translated RF signal to produce data." *Id.* at 67–68 (citing Ex. 1004 ¶ 232).

Petitioner contends that Jacobsen discloses the "multi-carrier" elements of limitation 1a.ii. *Id.* at 68–72. Specifically, Petitioner contends that Jacobsen discloses multi-carrier modulation using discrete multitone modulation (DMT). *Id.* at 68 (citing Ex. 1016, 9; Ex. 1004 ¶ 233). Petitioner asserts that Jacobsen's Figure 1 shows a DMT transmitter that includes a multi-carrier modulator for modulating signals to be transmitted on the coaxial cable, and a receiver that includes a multi-carrier demodulator

for demodulating the modulated signals received on the coaxial cable. *Id.* (citing Ex. 1016, 10; Ex. 1004 ¶ 234).

Petitioner asserts that the advantages afforded by multi-carrier modulation (*see* § II.E.4, *supra*) would have prompted a POSITA to implement Jacobsen's multi-carrier modulator and demodulator in place of Amit's single-carrier modulator and demodulator. Pet. 69–72 (citing Ex. 1014, Fig. 11 (annotated); Ex. 1016, Fig. 1 (annotated); Ex. 1004 ¶¶ 236–238).

We determine that Petitioner has shown by a preponderance of the evidence that Amit and Jacobsen each disclose limitation 1a.ii.

d) Limitation 1b: Cable Wiring with Splitter

Limitation 1b recites "cable wiring comprising a splitter with a common port and a plurality of tap ports, and a plurality of segments of coaxial cable connecting between the splitter tap ports and the network devices."

Petitioner contends that Amit discloses "home networking over coaxial TV cables." Pet. 72 (citing Ex. 1014, 2:38–40, 3:19–23; Ex. 1004 ¶¶ 241–242). Petitioner further asserts that, in Amit's Figure 2, RF splitter 203 splits the signal coming from and to the regional CATV plant 201, to signals coming to and from HCN devices 206, 207, 212, respectively. *Id.* at 72–73 (citing Ex. 1014, 2:36–39, Fig. 2 (annotated); Ex. 1003 ¶ 243).

Petitioner's annotated version of Amit's Figure 2 is reproduced below.

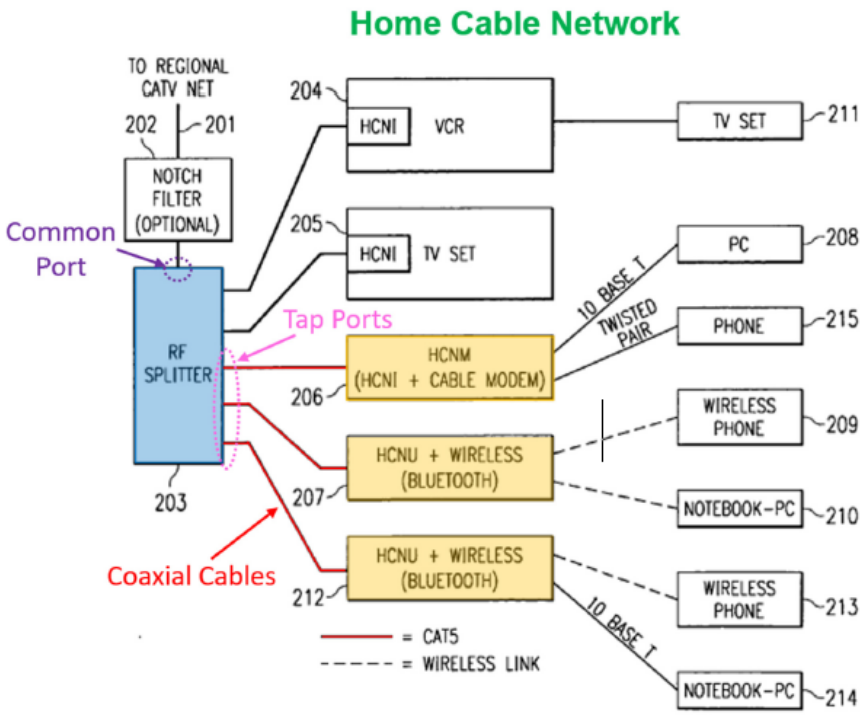

Referring to Amit's Figure 2 above, Petitioner states that RF splitter 203 (blue) has a common port (purple) and a plurality of tap ports (pink) connecting to HCN devices (orange) via segments of coaxial cable (red). *Id.* at 73 (citing Ex. 1014, 8:66–67; Ex. 1004 ¶¶ 244–245).

We determine that Petitioner has shown by a preponderance of the evidence that Amit discloses limitation 1b.

e) Limitation 1c: Multi-Carrier Signaling

Limitation 1c recites "whereby network devices communicate with each other through the cable wiring using multi-carrier signaling."

Petitioner contends that Amit discloses limitation 1c. Pet. 73–75. Specifically, Petitioner argues that the Amit-Jacobsen HCN devices each include a multi-carrier modulator for generating multi-carrier RF signals and multi-carrier demodulators for processing received multi-carrier RF signals. *Id.* at 73–74.

Petitioner further contends that Amit's HCN devices communicate with each other over coaxial cables (the claimed "network devices communicate with each other through the cable wiring"). *Id.* at 74 (citing Ex. 1014, 2:34–38, 3:10–13, 3:19–21, 6:57–59; Ex. 1004 ¶¶ 246–248). Petitioner annotates Amit's Figure 9 to show an example of how the HCN devices may communicate with one another through the splitter. *Id.* at 74–75 (citing Ex. 1014, 16:9–21, Fig. 9 (annotated); Ex. 1004 ¶ 249).

Petitioner further asserts that because the Amit-Jacobsen HCN devices are using multi-carrier modulation, the communication between the devices through the cable wiring of the HomeCN is multi-carrier signaling (the claimed "network devices communicate with each other through the cable wiring using multi-carrier signaling"). *Id.* at 75 (citing Ex. 1004 ¶¶ 250–251).

We determine that Petitioner has shown by a preponderance of the evidence that the combination of Amit and Jacobsen discloses limitation 1c.

f) Limitation 1d.i: Probe Messages

Limitation 1d.i recites "wherein network devices transmit probe messages through the cable wiring and analyze received probe message signals to determine channel characteristics."

Petitioner contends that Isaksson's system includes two multi-carrier transceivers/modems (the claimed "network devices") (shown in "orange") that communicate using multi-carrier signaling. Pet. 76 (citing Ex. 1013, 1:1–18, Fig. 22). Petitioner asserts that each transceiver has a receiver (RX) and transmitter (TX). *Id.* (citing Ex. 1004 ¶¶ 252–254).

Petitioner contends that, in Isaksson's multi-carrier transmission system, the receivers in both transceivers continuously measure and estimate

channel characteristics and changes in the channel. *Id.* (citing Ex. 1013, 4:1–8). "Channel characteristics may be estimated by periodic transmission, by one of the transceivers, of a base sync frame having predetermined content and comparing, in the other of said transceivers, the received sync frame with a reference frame." *Id.* at 76–77 (citing Ex. 1013, 10:10–14, 16:8–12, 16:15–20, 79:5–14; Ex. 1004 ¶¶ 255–256) (brackets omitted). Petitioner further contends that Isaksson transmits base sync frames periodically at a base sync interval, but may transmit additional sync frames between base sync frames, and thus transmit and receive multiple base sync frames to one another through the cable wiring. *Id.* at 77 (citing Ex. 1013, 16:15–20; Ex. 1004 ¶ 256). Petitioner contends that a POSITA would have understood Isaksson's "base sync frame" "is effectively identical to the '518 patent's definition of 'probe message.'" *Id.* (citing § IV.A.4; Ex. 1004 ¶ 257).

Petitioner contends that "a POSITA would have found it obvious to modify the combined Amit-Jacobsen HCN devices with Isaksson's synchronized bit-loading." *Id.* at 77–78 (citing Ex. 1013, 4:21–25; Ex. 1004 ¶ 258).

Petitioner contends that each of Amit-Jacobsen's HCN devices—as an uplink device—would periodically transmit base sync frames ("probe messages") to other HCN devices—as downlink HCN devices—through coaxial cables (the claimed "network devices transmit probe messages through the cable wiring"). *Id.* at 78 (citing Ex. 1013, 16:8–12). The downlink HCN devices would analyze the received frames by comparing them with reference frames to determine channel characteristics in terms of attenuation, phase shift, and variance (the claimed "analyze received probe

message signals to determine channel characteristics"). *Id.* (citing Ex. 1013, 16:15–20). Petitioner contends that "[t]he receiver in the uplink HCN device also analyzes received frames from the downlink HCN devices." *Id.* (citing Ex. 1013, 77:21–79:4; Ex. 1004 ¶¶ 259–260).

We determine that Petitioner has shown by a preponderance of the evidence that Amit-Jacobsen modified to use Isaksson's base sync frames ("probe messages") discloses limitation 1d.i.

g) Limitation 1d.ii: Bit Loading Selected Based on Channel Characteristics

Limitation 1d.ii recites "bit loading is selected based on the determined channel characteristics."

Petitioner contends that Isaksson discloses "that bit-loading parameters are selected based on the determined channel characteristics." Pet. 78 (citing Ex. 1004 ¶¶ 261–263). Petitioner contends that Isaksson teaches that its transceivers communicate using multiple carriers, and that they dynamically change the number of coded bits per carrier by measuring channel characteristics and, based on those measurements, reconfigure the number of bits per symbol for each carrier wave. Pet. 78–79 (citing Ex. 1013, 4:1–20, 25:26–26:20; Ex. 1004 ¶ 264).

Specifically, Petitioner asserts that Isaksson's receivers send information about the measured channels to Isaksson's transmitter in the uplink transceiver, which selects the bit-loading for each carrier and transmits the bit-loading constellation to the downlink transceiver while also changing the bit-loading constellation in the uplink transceiver. *Id.* at 79 (citing Ex. 1013, 77:27–79:14; Ex. 1004 ¶ 265).

Petitioner further contends that Isaksson's system selects bit-loading based on SNR, and that attenuation, phase shift, and variance measured by

Isaksson's receivers, can be used to calculate SNR. *Id.* (citing Ex. 1013, 3:24–27, 26:12–14; Ex. 1004 ¶ 266).

By way of explaining the overall operation of the Amit-Jacobsen-Isaksson combination, Petitioner contends that Amit-Jacobsen's HCN device, operating as an uplink device, would periodically transmit base sync frames to other HCN devices operating as downlink HCN devices. *Id.* at 80 (citing Ex. 1013, 16:8–12). The downlink HCN devices would analyze the received frames to determine channel characteristics, e.g., SNR, and send that information to the uplink HCN device which selects bit-loading parameters for the channel based on the received channel characteristics (the claimed "bit loading is selected based on the determined channel characteristics"). *Id.* (citing Ex. 1013, 4:1–20, 77:27–79:14; Ex. 1004 ¶¶ 267–269).

We determine that Petitioner has shown that the combination of Amit and Jacobsen, modified to include Isaksson's SNR-based, synchronized bit-loading, discloses limitation 1d.ii.

h) Conclusion for Claim 1

We determine that Petitioner has shown by a preponderance of the evidence that Jacobsen is ¶ 102(b) prior art to the '518 patent, and that a POSITA would have been motivated to combine Amit, Jacobsen, and Isaksson with a reasonable expectation of success, notwithstanding Patent Owner's arguments. Petitioner has further shown that each limitation of claim 1 is disclosed by the combination.

Accordingly, Petitioner has demonstrated by a preponderance of the evidence that claim 1 is unpatentable as obvious over the combination of Amit, Jacobsen, and Isaksson.

7. Claim 3

We now address Petitioner's contentions that the combination of Amit, Jacobsen, and Isaksson teaches or suggests each limitation of claim 3, which depends from claim 1. Pet. 80–81. Patent Owner does not dispute that each limitation of claim 1 is disclosed by the combination.

a) Limitation 3a: Shared Cable Wiring

Limitation 3a recites "[t]he data communication network of claim 1 wherein the network shares the cable wiring with a cable television service."

Petitioner quotes Amit as disclosing that "[t]he home networking equipment coexists with the other services on the cable network . . . [such that] [i]t is spectrally aligned with any combination of television and other signals in the cables; and [i]t does not cause harmful interference to any other services that are assigned to the cable network." Pet. 80 (citing Ex. 1014, 18:46–56; Ex. 1004 ¶¶ 270–272) (alterations in original).

We determine that Petitioner has shown by a preponderance of the evidence that Amit's network shares cable wiring with cable television services and therefore discloses limitation 3a.

b) Limitation 3b: RF Carrier Frequency Above Cable Television Frequency

Limitation 3b recites "the network device up converter translates the modulated data to an RF carrier frequency above the frequency used by the cable television service."

Petitioner contends that Amit discloses an up-converter that translates the modulated data to an RF carrier frequency for the reasons explained in the Petition with respect to limitation 1a.ii. Pet. 80.

Petitioner asserts that "Amit also discloses that the carrier frequency used by the HomeCN is above the frequency used by the cable television service." *Id.* at 80–81 (Ex. 1014, 3:24–27).

Petitioner points to Amit's Figure 5, reproduced below, as showing this feature.

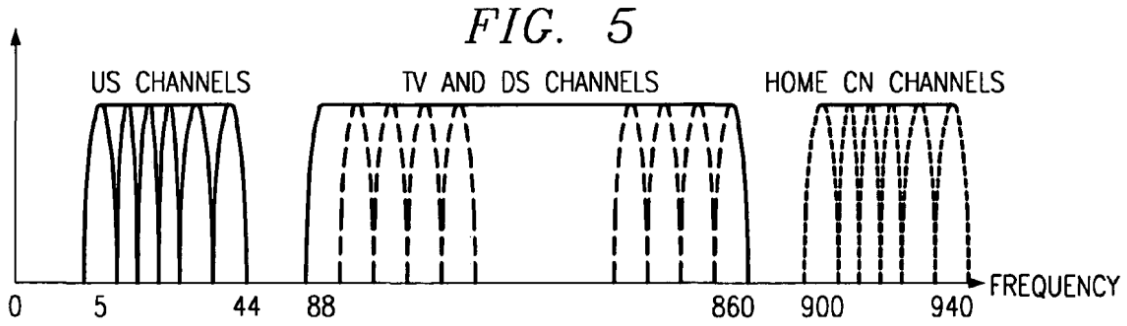

Figure 5 shows Amit's frequency allocation. Ex. 1014, 5:28–29. Petitioner asserts that, as shown in Amit's Figure 5, the frequency band used by cable television service is below 860 MHz whereas the frequency band dedicated to the HomeCN channels, the claimed "RF carrier frequency," is 900–940 MHz and thus is "above the frequency used by the cable television service" as claimed. Pet. 81 (citing Ex. 1014, 7:61–8:3, 8:22–28, Fig. 5; Ex. 1004 ¶¶ 273–277).

We determine that Petitioner has shown by a preponderance of the evidence that Amit's up converter translates modulated data to an RF carrier frequency above the frequency used by the cable television service, as shown, for example, in Amit's Figure 5.

c) Conclusion for Claim 3

We determine that Petitioner has shown by a preponderance of the evidence that Jacobsen is prior art to the '518 patent, that a POSITA would have been motivated to combine Amit, Jacobsen, and Isaksson with a reasonable expectation of success, and that each limitation of claim 3 is

disclosed by the combination. Accordingly, Petitioner has shown by preponderant evidence that claim 3 is unpatentable as obvious over the combination of Amit. Jacobsen, and Isaksson.

III. CONCLUSION

We have determined that Petitioner has shown by a preponderance of the evidence that claims 1 and 3 challenged in ground 1 are obvious over the combination of Kliger and Isaksson. We further have determined that Petitioner has shown by a preponderance of the evidence that claims 1 and 3 challenged in ground 2 are obvious over the combination of Amit, Jacobsen, and Isaksson.

IV. ORDER

For the foregoing reasons, it is

ORDERED that, pursuant to 35 U.S.C. § 318(a), claims 1 and 3 of the '518 patent have been shown to be unpatentable; and

FURTHER ORDERED that any party seeking judicial review must comply with the notice and service requirements of 37 C.F.R. § 90.2.[8]

---

[8] Should Patent Owner wish to pursue amendment of the challenged claims in a reissue or reexamination proceeding subsequent to the issuance of this Decision, we draw Patent Owner's attention to the April 2019 Notice Regarding Options for Amendments by Patent Owner Through Reissue or Reexamination During a Pending AIA Trial Proceeding. *See* 84 Fed. Reg. 16,654 (Apr. 22, 2019). If Patent Owner chooses to file a reissue application or a request for reexamination of the challenged patent, we remind Patent Owner of its continuing obligation to notify the Board of any such related matters in updated mandatory notices. *See* 37 C.F.R. § 42.8(a)(3), (b)(2).

In summary:

Claim(s)	35 U.S.C. §	Reference(s)/Basis	Claim(s) Shown Unpatentable	Claim(s) Not shown Unpatentable
1, 3	103(a)	Kliger, Isaksson	1, 3	
1, 3	103(a)	Amit, Kliger, Isaksson	1, 3	
Overall Outcome			1, 3	

For PETITIONER:

Adam R. Shartzer
Ruffin B. Cordell
Matthew P. Mosteller
Alyaman Amer
John J. Thuermer
Timothy Riffe
Usman Khan
FISH & RICHARDSON P.C.
shartzer@fr.com
cordell@fr.com
mosteller@fr.com
amer@fr.com
thuermer@fr.com
riffe@fr.com
khan@fr.com

For PATENT OWNER:

Jason A. Engel
Erik J. Halverson
Jared R. Lund
K&L GATES LLP
jason.engel.ptab@klgates.com
erik.halverson@klgates.com
jared.lund@klgates.com