IN THE UNITED STATES PATENT AND TRADEMARK OFFICE

Docket No.:	BIKN005C9
First Named Inventor:	John W. Howard
Filing Date:	Herewith
Title:	WIRELESS DEVICE AND METHODS FOR USE THEREWITH

Date: 1/19/2022

United States Patent and Trademark Office
P. O. Box 1450
Alexandria, VA 22313-1450

The present application claims priority, as a continuation, continuation-in-part, or a divisional of U.S. Utility Application No. 17/036,535, filed 9/29/2020, co-pending, entitled "WIRELESS DEVICE AND METHODS FOR USE IN A PAGING NETWORK," may also claim priority to one or more other applications and/or patents, and may be related to other applications and/or related patents, as detailed within the Application Data Sheet and/or the Specification of the present application along with any other applications and/or patents that claim priority from any of the foregoing (collectively, "Predecessor Applications").

The Examiner is advised that the prior art cited in the Predecessor Applications should be reviewed and cited during examination of the present application per the Manual of Patent Examining Procedure Section 904. The Examiner is advised that the rejections made, amendments made, and arguments made in the Predecessor Applications should be reviewed and considered during examination of the present application.

Pursuant to 37 CFR 1.56, an Information Disclosure Statement listing references is provided herewith. Listed references are of record in U.S. Application No. 17/036,535, filed 9/29/2020, which is relied upon for an earlier filing date under either 35 U.S.C. 120 or 35 U.S.C. 121. Copies of the references are not submitted pursuant to 37 CFR 1.98(d).

The Examiner is advised that any disclaimer that may be made in the present application should not be read into or against the Predecessor Applications or any patents issuing therefrom. Further, the Examiner is also advised that any disclaimer made in a Predecessor Application is not to be read into or against the present application.

RESPECTFULLY SUBMITTED,

By: /Bruce Stuckman, Ph.D./Reg. No. 36693
Bruce E. Stuckman

Garlick & Markison
100 Congress Avenue, Suite 2000
Austin, TX 78701
Phone: 512-487-7241
E-mail: bstuckman@texaspatents.com

TITLE OF THE INVENTION
WIRELESS DEVICE AND METHODS FOR USE THEREWITH

CROSS REFERENCE TO RELATED APPLICATIONS

The present U.S. Utility Patent Application claims priority pursuant to 35 U.S.C. § 120 as a continuation of U.S. Utility Application No. 17/036,535, entitled WIRELESS DEVICE AND METHODS FOR USE IN A PAGING NETWORK, filed 9/29/2020, which is a continuation of U.S. Utility Application No. 16/837,481, entitled WIRELESS DEVICE AND METHODS FOR USE IN A PAGING NETWORK, filed 4/1/2020, issued as U.S. Patent No. 10,834,539 on 11/10/2020, which is a continuation of U.S. Utility Application No. 16/540,665, entitled WIRELESS DEVICE AND METHODS FOR USE IN A PAGING NETWORK, filed 8/14/2019, issued as U.S. Patent No. 10,645,537 on 5/5/2020, which is a continuation of U.S. Utility Application No. 16/150,498, entitled WIRELESS DEVICE AND METHODS FOR USE IN A PAGING NETWORK, filed 10/3/2018, issued as U.S. Patent No. 10,440,501 on 10/8/2019, which is a continuation of U.S. Utility Application No. 15/910,654, entitled WIRELESS DEVICE AND METHODS FOR USE IN A PAGING NETWORK, filed 3/2/2018, issued as U.S. Patent No. 10,123,161 on 11/6/2018, which is a continuation of U.S. Utility Application No. 15/000,903, entitled WIRELESS DEVICE AND METHODS FOR USE IN A PAGING NETWORK, filed 1/19/2016, issued as U.S. Patent No. 9,942,700 on 4/10/2018, which is a continuation of U.S. Utility Application No. 14/281,077, entitled WIRELESS DEVICE AND METHODS FOR USE IN A PAGING NETWORK, filed 5/19/2014, issued as U.S. Patent No. 9,295,024 on 3/22/2016, which is a continuation of U.S. Utility Application No. 14/044,202, entitled WIRELESS DEVICE AND METHODS FOR USE IN A PAGING NETWORK, filed 10/2/2013, issued as U.S. Patent No. 8,768,381 on 7/1/2014, which is a continuation of U.S. Utility Patent Application No. 12/713,346, entitled WIRELESS DEVICE AND METHODS FOR USE IN A PAGING NETWORK, filed 2/26/2010, issued as U.S. Patent No. 8,588,806 on 11/19/2013, all of which are hereby incorporated herein by reference in their entirety and made part of the present U.S. Utility Patent Application for all purposes.

The present application is related to the following U.S. patent applications that are commonly assigned:

SYSTEM AND WIRELESS DEVICE FOR LOCATING A REMOTE OBJECT, having serial number 12/713,316 filed on 2/26/2010, issued as U.S. Patent No. 8,253,559 on 8/28/2012;

ADJUNCT DEVICE AND A HANDHELD WIRELESS COMMUNICATION DEVICE WITH LOCATION FEATURES, having serial number 12/713,319, filed on 2/26/2010, issued as U.S. Patent No. 8,253,560 on 8/28/2012;

MULTI-FUNCTION ADJUNCT DEVICE FOR USE WITH A HANDHELD WIRELESS COMMUNICATION DEVICE, having serial number 12/713,329, filed on 2/26/2010, issued as U.S. Patent No. 8,285,248 on 10/9/2012;

METHODS FOR USE IN CONJUNCTION WITH A HANDHELD WIRELESS COMMUNICATION DEVICE HAVING AN ADJUNCT DEVICE COUPLED THERETO, having serial number 12/713,334, filed on 2/26/2010, issued as U.S. Patent No. 8,254,878 on 8/28/2012;

ADJUNCT DEVICE FOR USE WITH A HANDHELD WIRELESS COMMUNICATION DEVICE AS A SCREEN POINTER, having serial number 12/713,350, filed on 2/26/2010, issued as U.S. Patent No. 8,884,871 on 11/11/2014;

the contents of which are expressly incorporated herein in their entirety by reference thereto.

TECHNICAL FIELD OF THE INVENTION

The present invention relates to wireless communication devices.

DESCRIPTION OF RELATED ART

As is known, wireless communication devices are commonly used to access long range communication networks as well as broadband data networks that provide text messaging, email services, Internet access and enhanced features such as streaming audio and video, television service, etc., in accordance with international wireless communications standards such as 2G, 2.5G, 3G and 4G. Examples of such networks include wireless telephone networks that operate cellular, personal communications service (PCS), general packet radio service (GPRS), global system for mobile communications (GSM), and integrated digital enhanced network (iDEN).

Many wireless telephones have operating systems that can run applications that perform additional features and functions. Apart from strictly wireless telephony and messaging, wireless telephones have become general platforms for a plethora of functions associated with, for example, navigational systems, social networking, electronic organizers, audio/video players, shopping tools, and electronic games. Users have the ability to choose a wireless telephone and associated applications that meet the particular needs of that user. Consequently, the wireless telephone has, in some ways, become an important device for many aspects of the user's life. Misplacing a user's wireless telephone can be an annoying experience. Further, while a wide range of wireless telephones and applications are available today, other functions and features are desirable, particularly for use in conjunction with other wireless devices.

The disadvantages of conventional approaches will be evident to one skilled in the art when presented the disclosure that follows.

BRIEF SUMMARY OF THE INVENTION

The present invention is directed to various system, apparatus and methods of operation that are further described in the following Brief Description of the Drawings, the Detailed Description of the Invention, and the claims. Other features and advantages of the present invention will become apparent from the following detailed description of the invention made with reference to the accompanying drawings.

BRIEF DESCRIPTION OF THE SEVERAL VIEWS OF THE DRAWINGS

FIG. 1 presents a pictorial representation of a location system for use with a handheld wireless communication device 110 in accordance with an embodiment of the present invention.

FIG. 2 presents a pictorial representation of handheld wireless communication device 110 and adjunct device 100 in accordance with an embodiment of the present invention.

FIG. 3 presents a pictorial representation of handheld wireless communication device 110 and adjunct device 100 in accordance with an embodiment of the present invention.

FIG. 4 presents a pictorial representation of a location system for use with a handheld wireless communication device 110 in accordance with an embodiment of the present invention.

FIG. 5 presents a schematic block diagram of a wireless device 120 and adjunct device 100 in accordance with an embodiment of the present invention.

FIG. 6 presents a pictorial representation of a location system for use with a handheld wireless communication device 110 in accordance with an embodiment of the present invention.

FIG. 7 presents a graphical representation of an antenna pattern in accordance with an embodiment of the present invention.

FIG. 8 presents a pictorial representation of handheld wireless communication device 110 and adjunct device 100 in accordance with an embodiment of the present invention.

FIG. 9 presents a schematic block diagram of an antenna 148 in accordance with an embodiment of the present invention.

FIG. 10 presents a schematic block diagram of an antenna 148' in accordance with an embodiment of the present invention.

FIG. 11 presents a schematic block diagram of an antenna 148'' in accordance with an embodiment of the present invention.

FIG. 12 presents a graphical representation of a signal magnitude in accordance with an embodiment of the present invention.

FIG. 13 presents a schematic block diagram of adjunct device 100 in accordance with an embodiment of the present invention.

FIG. 14 presents a graphical representation of a difference signal in accordance with an embodiment of the present invention.

FIG. 15 presents a pictorial representation of handheld wireless communication device 110 and adjunct device 100 in accordance with an embodiment of the present invention.

FIG. 16 presents a schematic block diagram of wireless devices 70 and 72 in accordance with an embodiment of the present invention.

FIG. 17 presents a schematic block diagram of paging networks 90 and 92 in accordance with an embodiment of the present invention.

FIG. 18 presents a pictorial representation of a screen display 170 in accordance with an embodiment of the present invention.

FIG. 19 presents a pictorial representation of a screen display 172 in accordance with an embodiment of the present invention.

FIG. 20 presents a schematic block diagram of a wireless device 122 and adjunct device 101 in accordance with an embodiment of the present invention.

FIG. 21 presents a schematic block diagram of devices 91, 93 and 94 in accordance with an embodiment of the present invention.

FIG. 22 presents a pictorial representation of a screen display 190 in accordance with an embodiment of the present invention.

FIG. 23 presents a pictorial representation of a screen display 192 in accordance with an embodiment of the present invention.

FIG. 24 presents a schematic block diagram of a wireless device 123 and adjunct device 101 in accordance with an embodiment of the present invention.

FIG. 25 presents a schematic block diagram of devices 210, 212 and 214 in accordance with an embodiment of the present invention.

FIG. 26 presents a pictorial representation of a screen display 220 in accordance with an embodiment of the present invention.

FIG. 27 presents a pictorial representation of a screen display 222 in accordance with an embodiment of the present invention.

FIG. 28 presents a pictorial representation of handheld wireless communication device 110 and adjunct device 100 in accordance with an embodiment of the present invention.

FIG. 29 presents a pictorial representation of handheld wireless communication device 110 and adjunct device 100 in accordance with an embodiment of the present invention.

FIG. 30 presents a pictorial representation of screen pointing system in accordance with an embodiment of the present invention.

FIG. 31 presents a schematic block diagram of video device 254 in accordance with an embodiment of the present invention.

FIG. 32 presents a schematic block diagram representation of a location system in accordance with an embodiment of the present invention.

FIG. 33 presents a schematic block diagram of a handheld wireless communication device 300 in accordance with an embodiment of the present invention.

FIG. 34 presents a pictorial representation of a back view of an adjunct device 330 in accordance with an embodiment of the present invention.

FIG. 35 presents a pictorial representation of a cutaway side view of an adjunct device 330 in accordance with an embodiment of the present invention.

FIG. 36 presents a pictorial representation of a front view of a wireless device 325 in accordance with an embodiment of the present invention.

FIG. 37 presents a flowchart representation of a method in accordance with an embodiment of the present invention.

FIG. 38 presents a flowchart representation of a method in accordance with an embodiment of the present invention.

FIG. 39 presents a flowchart representation of a method in accordance with an embodiment of the present invention.

FIG. 40 presents a flowchart representation of a method in accordance with an embodiment of the present invention.

DETAILED DESCRIPTION OF THE INVENTION

FIG. 1 presents a pictorial representation of a location system for use with a handheld wireless communication device 110 in accordance with an embodiment of the present invention. In particular, a handheld wireless communication device 110, such as a smart phone, digital book, netbook, personal computer with wireless data communication or other wireless communication device that includes a wireless transceiver for communicating over a long range wireless network such as a cellular, PCS, CDMA, GPRS, GSM, iDEN or other wireless communications network and/or a short-range wireless network such as an IEEE 802.11 compatible network, a Wimax network, another wireless local area network connection or other communications link. Handheld wireless communication device 110 is capable of engaging in wireless communications such as

sending and receiving telephone calls and/or wireless data in conjunction with text messages such as emails, short message service (SMS) messages, pages and other data messages that may include multimedia attachments, such as documents, audio files, video files, images and other graphics. Handheld wireless communication device 110 includes one or more processing devices for executing other applications and a user interface that includes, for example, buttons, a display screen such as a touch screen, a speaker, a microphone, a camera for capturing still and/or video images and/or other user interface devices.

Wireless device 120 is shown that includes a user interface that includes push buttons 10, a light emitter 14 such as a light emitting diode (LED) or other emitter, and sound emitter 12 such as a beeper, buzzer, speaker or other audio device. While particular user interface devices are shown, the wireless device can similarly include other devices such as a touch screen or other display screen, a thumb wheel, trackball, and/or other input or output devices. The user interface of the wireless device 120 generates a location request signal in response to an indication from a user by for instance, pushing one of the push buttons 10.

Wireless device 120 further includes a short-range wireless transmitter that transmits an RF paging signal, such as paging signal 16 in response to the location request signal. The short-range wireless transmitter can be part of a transceiver that operates in conjunction with a communication standard such as 802.11, Bluetooth, ZigBee, ultra-wideband, Wimax or other standard short or medium range communication protocol, or other protocol.

Adjunct device 100 includes a housing that is coupleable to the handheld wireless communication device 110 via a communication port of the handheld wireless communication device 110. The adjunct device 100 includes a short-range wireless receiver that receives the RF paging signal, such as paging signal 16. The short-range wireless receiver of adjunct 100 can also be part of a transceiver that operates in conjunction with a communication standard such as 802.11, Bluetooth, ZigBee, ultra-wideband, Wimax or other standard short or medium range communication protocol, or other protocol. In particular, the short-range wireless receiver of adjunct device 100 is configured to receive the paging signal 16 generated by wireless device 120.

Adjunct device includes its own user interface having push buttons 20, sound emitter 22 and light emitter 24 that emit audio and/or visual alert signals in response to the paging signal 16 to assist the user in locating the handheld wireless communication device. As with the user interface of wireless device 120, the user interface of adjunct device 100 can similarly include other devices such as a touch screen or other display screen, a thumb wheel, trackball, and/or other input or output devices.

In operation, a user can attach the adjunct device 100 to his or her handheld wireless communication device 110. If the handheld wireless communication device 110 is lost or mislaid, the user can locate the handheld wireless communication device by activating a paging button on the wireless device 120 that causes paging signal 16 to be broadcast. The adjunct device 100 responds to the paging signal 16 by flashing light emitter 24 and/or emitting a loud sound such as a beeping, buzzing or other alarm signal via sound emitter 22. The user can locate the handheld wireless communication device 110 by homing in on the visual and/or audio emissions.

The further operation of wireless device 120 and adjunct device 100, including several optional implementations, different features and functions spanning complementary embodiments are presented in conjunction with FIGs. 2-40 that follow.

FIGs. 2 and 3 present pictorial representations of handheld wireless communication device 110 and adjunct device 100 in accordance with an embodiment of the present invention. As shown in FIG. 2, adjunct device 100 and handheld wireless communication device 110 are decoupled. Handheld wireless communication device 110 includes a communication port 26' and adjunct device 100 includes a mating plug 26 for coupling the adjunct device 100 to the communication port 26' of handheld wireless communication device 110. In an embodiment of the present invention, the communication port 26' and plug 26 are configured in conjunction with a standard interface such as universal serial bus (USB), Firewire, or other standard interface, however, a device specific communication port such as an Apple iPod/iPhone port, a Motorola communication port or other communication port can likewise be employed. Further, while a physical connection is shown, a wireless connection, such as a Bluetooth link, 802.11 compatible link, an RFID

connection or other wireless connection can be employed in accordance with alternative embodiments.

As shown in FIG. 3, adjunct device 100 is coupled to the handheld wireless communication device 110 by plug 26 being inserted in communication port 26'. Further, adjunct device 100 includes its own communication port 28' for coupling, via a mating plug 28, the adjunct device 100 to an external device 25, such as a computer or other host device, external charger or peripheral device. In an embodiment of the present invention, the communication port 28' and plug 28 are configured in conjunction with a standard interface such as universal serial bus (USB), Firewire, or other standard interface, however, a device specific communication port such as an Apple iPod/iPhone port, a Motorola communication port or other communication port can likewise be employed.

In an embodiment of the present invention, the adjunct device passes signaling between the external device 25 and the handheld wireless communication device 110 including, for instance, charging signals from the external connection and data communicated between the handheld wireless communication device 110 and the external device 25. In this fashion, the external device can communicate with and/or charge the handheld wireless communication device with the adjunct device 100 attached, via pass through of signals from plug 28 to communication port 26'. It should be noted however, that while communication ports 28' and 26' can share a common physical configuration, in another embodiment of the present invention, the communication ports 28' and 26' can be implemented via different physical configurations. For example, communication port 26' can be implemented via a device specific port that carries USB formatted data and charging signals and communication port 28' can be implemented via a standard USB port. Other examples are likewise possible.

In an embodiment of the present invention, when the adjunct device 100 is coupled to handheld wireless communication device 110, the adjunct device 100 initiates communication via the communication port 26' to determine if an application is loaded in the handheld wireless communication device 110 -- to support the interaction with the adjunct device 100. Examples of such applications include a location application or other application that operates in conjunction

with the adjunct 100. If no such application is detected, the adjunct 100 can communicate via communication port 26' to initiate a download of such an application directly or to send the browser of the handheld wireless communication device 110 to a website store at a remote server or other location where supporting applications can be browsed, purchased or otherwise selected for download to the handheld wireless communication device 110.

In a further embodiment of the present invention, when a supporting application is loaded in handheld wireless communication device 110, the handheld wireless communication device 110 initiates communications via the communication port 26' to determine if an adjunct device 100 is coupled thereto or whether or not an adjunct device has never been coupled thereto. If no such adjunct device 100 is detected, the application can instruct the user to connect the adjunct device 100. Further, the application can, in response to user selection and/or an indication that an adjunct device has not been previously coupled to the handheld wireless communication device 110, automatically direct a browser of the handheld wireless communication device 110 to a website store at a remote server or other location where a supporting adjunct devices 100 can be selected and purchased, in order to facilitate the purchase of an adjunct device, via the handheld wireless communication device 110.

In a further embodiment, the application maintains a flag that indicates if an adjunct device 100 has previously been connected. In response to an indication that an adjunct device has not been previously coupled to the handheld wireless communication device 110, the application can automatically direct a browser of the handheld wireless communication device 110 to a website store at a remote server or other location where a supporting adjunct devices 100 can be selected and purchased, in order to facilitate the purchase of an adjunct device, via the handheld wireless communication device 110.

FIG. 4 presents a pictorial representation of a location system for use with a handheld wireless communication device 110 in accordance with an embodiment of the present invention. In particular, adjunct device 100 and wireless device 120 can operate in a reciprocal fashion to locate wireless device 120. In particular, wireless device 120 includes a housing that is attachable to or includes a ring, clip or other fastener that can be coupled to key 30 as shown or to another

personal object such as a coat, a person, a pet or other thing. Further, wireless device 120 can be embodied as a card or other device that can be slipped into a wallet, an article of clothing, a bag or other thing to be located.

In any of these cases, the wireless device 120 includes its own short-range wireless receiver that receives a paging signal 112 transmitted by adjunct device 110. In response to the paging signal 112, a light or sound emitter of wireless device 120 emits a detectable alert signal that helps the user locate the personal object. In an embodiment of the present invention, the adjunct device 100 operates in a similar fashion to wireless device 120 to initiate the paging signal 112. In particular, the transmission of paging signal 112 can be initiated by pressing a button or otherwise interacting with the user interface of adjunct 100. In a further embodiment, handheld wireless communication device 100 includes an interactive application that generates application data that is passed to adjunct device 100 via the communication port of the handheld wireless communication device 100. Adjunct device 100 responds to such application data by initiating the transmission of the paging signal 112. In either case, a user of handheld wireless communication device 110 that wishes to locate his or her key 30, or other object coupled to wireless device 120, initiates the paging signal 112. The user can then locate the wireless device 120 and corresponding object by homing in on the visual and/or audio emissions of the wireless device 120.

FIG. 5 presents a schematic block diagram of a wireless device 120 and adjunct device 100 in accordance with an embodiment of the present invention. In particular, wireless device 120 includes short-range wireless transceiver 130 coupled to antenna 138, processing module 131, user interface 132 and memory 133. While not expressly shown, wireless device 120 can include a replaceable battery for powering the components of wireless device 120. In the alternative, wireless device 120 can include a battery that is rechargeable via an external charging port, for powering the components of wireless device 120. Adjunct device 100 includes short-range wireless transceiver 140 coupled to antenna 148, processing module 141, user interface 142 and memory 143, device interface 144, and battery 146. The processing modules 131 and 141 control the operation of the wireless device 120 and adjunct device 100, respectively and provide further

functionality described in conjunction with, and as a supplement to, the functions provided by the other components of wireless device 120 and adjunct device 100.

As discussed in conjunction with FIGs. 1-4, the short-range wireless transceivers 130 and 140 each can be implemented via a transceiver that operates in conjunction with a communication standard such as 802.11, Bluetooth, ZigBee, ultra-wideband, Wimax or other standard short or medium range communication protocol, or other protocol. User interfaces 132 and 142 each can contain one or more push buttons, a sound emitter, light emitter, a touch screen or other display screen, a thumb wheel, trackball, and/or other user interface devices.

The processing module 131 can be implemented using a microprocessor, micro-controller, digital signal processor, microcomputer, central processing unit, field programmable gate array, programmable logic device, state machine, logic circuitry, analog circuitry, digital circuitry, and/or any device that manipulates signals (analog and/or digital) based on operational instructions that are stored in memory, such as memory 133. Note that when the processing module 131 implements one or more of its functions via a state machine, analog circuitry, digital circuitry, and/or logic circuitry, the memory storing the corresponding operational instructions may be embedded within, or external to, the circuitry comprising the state machine, analog circuitry, digital circuitry, and/or logic circuitry. Further note that, the memory module 133 stores, and the processing module 131 executes, operational instructions corresponding to at least some of the steps and/or functions illustrated herein.

The memory module 133 may be a single memory device or a plurality of memory devices. Such a memory device may be a read-only memory, random access memory, volatile memory, non-volatile memory, static memory, dynamic memory, flash memory, cache memory, and/or any device that stores digital information. While the components of wireless device 120 are shown as being coupled by a particular bus structure, other architectures are likewise possible that include additional data busses and/or direct connectivity between components. Wireless device 120 can include additional components that are not expressly shown.

Likewise, the processing module 141 can be implemented using a microprocessor, micro-controller, digital signal processor, microcomputer, central processing unit, field programmable gate array, programmable logic device, state machine, logic circuitry, analog circuitry, digital circuitry, and/or any device that manipulates signals (analog and/or digital) based on operational instructions that are stored in memory, such as memory 143. Note that when the processing module 141 implements one or more of its functions via a state machine, analog circuitry, digital circuitry, and/or logic circuitry, the memory storing the corresponding operational instructions may be embedded within, or external to, the circuitry comprising the state machine, analog circuitry, digital circuitry, and/or logic circuitry. Further note that, the memory module 143 stores, and the processing module 141 executes, operational instructions corresponding to at least some of the steps and/or functions illustrated herein.

The memory module 143 may be a single memory device or a plurality of memory devices. Such a memory device may be a read-only memory, random access memory, volatile memory, non-volatile memory, static memory, dynamic memory, flash memory, cache memory, and/or any device that stores digital information. While the components of adjunct device 100 are shown as being coupled by a particular bus structure, other architectures are likewise possible that include additional data busses and/or direct connectivity between components. Adjunct device 100 can include additional components that are not expressly shown.

As shown, the adjunct device includes a battery 146 that is separate from the battery of the handheld wireless communication device 110 and can supply power to short-range wireless transceiver 140, processing module 141, user interface 142, memory 143, and device interface 144 in conjunction with a power management circuit, one or more voltage regulators or other supply circuitry. By being separately powered from the handheld wireless communication device 110, the adjunct 100 can operate even if the battery of the handheld wireless communication device is discharged. In this fashion, the user can still page the adjunct device 100 to locate the handheld wireless communication device 110 when the battery of the handheld wireless communication device is discharged.

Device interface 144 provides an interface between the adjunct device 100 and the handheld wireless communication device 110 and an external device 25, such as a computer or other host device, peripheral or charging unit. As previously discussed in conjunction with FIGs. 1-4, the housing of adjunct device 100 includes a plug, such as plug 26, or other coupling device for connection to the communication port 26' of the handheld wireless communication device 110. In addition, the housing of adjunct device 100 further includes its own communication port, such as communication port 28 or other coupler for connecting to an external device 25. Device interface 144 is coupled to the communication port 28 that operates as a charging port. When adjunct device 100 is connected to an external source of power, such as external device 25, device interface 144 couples a power signal from the external power source to charge the battery 146. In addition, the device interface 144 couples the power signal from the external power source to the communication port of the handheld wireless communication device 110 to charge the battery of the handheld wireless communication device. In this fashion, both the handheld wireless communication device 110 and the adjunct device 100 can be charged at the same time. Further, the handheld wireless communication device 110 can be charged while the devices are still coupled -- without removing the adjunct device 100 from the handheld wireless communication device 110.

While the battery 146 is separate from the battery of the handheld wireless communication device 110, in an embodiment of the present invention, the device interface 144 is switchable between an auxiliary power mode and a battery isolation mode. In the battery isolation mode, the device interface 144 decouples the battery 146 from the battery of the handheld wireless communication device 110, for instance, to preserve the charge of battery 146 for operation even if the battery of the handheld wireless communication device 110 is completely or substantially discharged. In the auxiliary power mode, the device interface 144 couples the power from the battery 146 to the handheld wireless communication device 110 via the communication port to charge the battery of the handheld wireless communication device 110. In this fashion, the user of the handheld wireless communication device 110 at or near a discharged state of the handheld wireless communication device battery could opt to draw power from the battery 146. In an embodiment of the present invention, signaling from user interface 142 could be used to switch the device interface 144 between the battery isolation mode and the auxiliary power mode.

Alternatively or in addition, signaling received from the handheld wireless communication device via the communication port, or remotely from wireless device 120, could be used to switch the device interface 144 between the battery isolation mode and the auxiliary power mode.

Device interface 144 includes one or more switches, transistors, relays, or other circuitry for selectively directing the flow of power between the external device 25, the battery 146, and the handheld wireless communication device 110 as previously described. In addition, the device interface 144 includes one or more signal paths, buffers or other circuitry to couple communications between the communication port of the adjunct device 110 and the communication port of the handheld wireless communication device 110 to pass through communications between the handheld wireless communication device 110 and an external device 25. In addition, the device interface 144 can send and receive data from the handheld wireless communication device 110 for communication between the adjunct device 100 and handheld wireless communication device 110.

FIG. 6 presents a pictorial representation of a location system for use with a handheld wireless communication device 110 in accordance with an embodiment of the present invention. In this embodiment, adjunct device 100 operates as previously described to transmit a paging signal 112. In this embodiment however, wireless device 120 transmits a location signal 114 via short-range wireless transceiver 130, such as a beacon signal or other location signal. Adjunct device 100 aids the user of handheld wireless communication device 110 in homing in on the location signal 114 based on the signal strength of the location signal 114 as received by short-range wireless transceiver 140.

In an embodiment of the present invention, the handheld wireless communication device 110 executes a location application that operates under user control to initiate the transmission of paging signal 112 to locate key or keys 30 or other object associated with wireless device 120. The signal strength of the location signal 114 from short-range wireless transceiver 140 is converted to signal strength data by processor 141 and sent to handheld wireless communication device 110 via device interface 144 and the communication port of the handheld wireless communication device 110. The signal strength data is used by the location application to generate

a graphical user interface including display screen 150. As shown, display screen 150 includes an indication 152 of the particular object being located and a visual signal strength indication 154. In this fashion, the user can move around with the handheld wireless communication device 110 and hunt for the key or keys 30, guided by changes in the visual signal strength indication 154. In particular, the user of handheld wireless communication device 110 can move about, seeking to maximize the visual signal strength indication 154 until the key or keys 30 are located.

While signal strength is described above as a measure of approximate distance to a remote device, the time of flight methodology described in conjunction with FIG. 37 or other distance approximations can likewise be employed.

FIG. 7 presents a graphical representation of an antenna pattern in accordance with an embodiment of the present invention. A possible reception pattern of antenna 148 of adjunct device 100 is shown. The antenna pattern 160 is shown in two dimensions, corresponding to, for instance, the horizontal plane of the user. In particular, antenna 148 can include a pair of loop antennas, monopoles or dipoles or other antenna configurations that are aligned in position and phase to have a directional pattern that includes a single null. While a cardioid pattern is presented, other antenna patterns with a single null or with multiple nulls, such as multiple closely spaced nulls may also be employed.

As previously discussed, the short-range wireless transceiver 140 generates signal strength in response to the location signal 114 from wireless device 120. The signal strength is used to generate signal strength data that is communicated to the location application of handheld wireless communication device 110 via the communication port of the handheld wireless communication device. The use of a directional antenna in the implementation of antenna 148 can assist the location application in determining a direction to the wireless device 120. For example, the user can change the orientation of the handheld wireless communication device to determine the direction to the wireless device 120. The location application can detect when the orientation of the handheld wireless communication device corresponds to the direction of the wireless device, based on the signal strength data. When the null direction of the antenna 148 is pointing toward the wireless device 120, a null signal strength reading will occur. The location application can

indicate a match to the user to inform him or her that the handheld wireless communication device 110 is pointed toward the wireless device 120.

In an alternative embodiment, the user is instructed to "turn around" to gather 360 degrees of directional data. The signal strength data can be analyzed in conjunction with one or more orientation sensors of the handheld wireless communication device 110, to determine a direction to the wireless device 120. In particular, the location application can determine the particular orientation of the device corresponding to the point where the null of antenna pattern 160 is aligned with the direction to the wireless device 120, and feedback that direction to the user via a directional indicator.

In an alternative embodiment, the antenna 148 includes a steerable pattern 150 that includes a steerable null. The location application of handheld wireless communication device 110 can, for example, instruct the user to stand still while the short-range wireless transceiver 140 completes a directional sweep. The location application sends application data to the adjunct device via device interface 144 that instructs the processor 141 to command the programmable antenna to sweep the null direction by 360 degrees and to collect corresponding signal strength data. Analysis of the signal strength data by the location application can be used to determine the direction to the wireless device 120 based on the direction corresponding to the null. Feedback of that direction can be provided to the user via a directional indicator generated by the location application.

Further discussion of these features including several different embodiments and optional features are discussed in conjunction with FIGs. 8-15 that follow.

FIG. 8 presents a pictorial representation of handheld wireless communication device 110 and adjunct device 100 in accordance with an embodiment of the present invention. In particular, a display screen 162 is shown that includes a signal strength indication 164 and an indication of direction 166 that can be used in conjunction with the location application examples discussed in association with FIG. 7. It should be noted that the location application of handheld wireless communication device 110 can operate to invert the signal strength data to generate the signal strength indication 164 so that when the null direction of the antenna pattern 160 is aligned with

direction to wireless device 120, the low signal strength caused by the null is translated into a high signal strength indication, indicating to the user the device is pointed in the right direction.

In this particular embodiment, the indication of direction 166 is fixed, and is pointed in the null direction of the antenna 148. As the user changes the orientation of the handheld wireless communication device 110, the (inverted) signal strength indication 164 varies. When the inverted signal strength indication 164 peaks, this indicates that the null direction of the antenna 148 (and the indication of direction 166) is pointing toward the wireless device 120.

FIG. 9 presents a schematic block diagram of an antenna 148 in accordance with an embodiment of the present invention. In particular, antenna 148 includes two separate antennas 168 and 169 that are selectable by switch 161 in response to control signal 165. In an embodiment of the present invention, the antenna 168 is an omnidirectional or substantially omnidirectional antenna and antenna 169 has a radiation pattern that includes a null, as described in conjunction with FIGs. 7-8. RF signals 167 are sent or received by the particular antenna 168 or 169 that is selected. The control signal 165 can be generated by processor 141 or application data from a location application of handheld wireless communication device 110.

In operation, control signal 165 is generated to select antenna 168 for standard operation. In this fashion, when the adjunct device 100 sends paging signals 112 or receives paging signal 16, signals can be received from all directions. When the adjunct device 100 is receiving location signals 114 from a remote wireless device 120, control signal 165 is generated to switch antenna 148 to antenna 169. In this fashion the null pattern of antenna 169 can be used by the location application of handheld wireless communication device 110 to provide directional feedback to the user.

FIG. 10 presents a schematic block diagram of an antenna 148' in accordance with an embodiment of the present invention. In particular, antenna 148 is implemented via a programmable antenna 148' that has a controllable radiation pattern. In one mode of operation, the programmable antenna is controlled via control signal 163 to an omnidirectional or substantially omnidirectional antenna pattern. The control signal 163 can be generated by

processor 141 or application data from a location application of handheld wireless communication device 110. This mode of operation is selected when the adjunct device 100 sends paging signals 112 or receives paging signal 16. In this fashion, signals can be received from all directions.

When the adjunct device is receiving location signals 114 from a remote wireless device 120, control signal 163 is generated to switch antenna 148' to an antenna pattern, such as antenna pattern 160, and optionally to steer the null direction in conjunction with a directional sweep. In this mode of operation, the null pattern of antenna 148' can be used by the location application of handheld wireless communication device 110 to provide directional feedback to the user.

FIG. 11 presents a schematic block diagram of an antenna 148'' in accordance with an embodiment of the present invention. In particular, antenna 148'' is a programmable antenna that includes two separate antenna elements 176 and 174. The antenna 148'' is configurable to a first configuration where switch 161 decouples antenna element 174 and only antenna element 176 is active. In a second configuration, switch 161 coupled antenna element 174 to antenna element 176 and both elements are active.

In an embodiment of the present invention, antenna elements 174 and 176 are separate loops, monopoles, dipoles or other antenna elements. The antenna formed by only antenna element 176 produces an omnidirectional or substantially omnidirectional antenna pattern. The antenna formed by the combined antenna with antenna elements 174 and 176 has a radiation pattern that includes a null. Antenna 148'' can be operated in response to control signals 165 in a similar fashion to the antenna 148 of FIG. 9.

In operation, control signal 165 is generated to select the omnidirectional antenna configuration for standard operation. In this fashion, when the adjunct device 100 sends paging signals 112 or receives paging signal 16, signals can be received from all directions. When the adjunct device is receiving location signals 114 from a remote wireless device 120, control signal 165 is generated to switch antenna 148'' to the second configuration. In this fashion the null pattern of antenna 148'' can be used by the location application of handheld wireless communication device 110 to provide directional feedback to the user.

FIG. 12 presents a graphical representation of a signal magnitude in accordance with an embodiment of the present invention. In particular, signal strength *M* represents signal strength data collected by short-range wireless transceiver 140 in response to location signal 114. As discussed in conjunction with FIGs. 7-11, an antenna having a null direction is used in this mode of operation of adjunct 100. Signal strength *M* is generated over a range of directions, such as over 360 degrees of rotation, either by manually steering the handheld wireless communication device 110 coupled to adjunct 100 in the case of a fixed antenna such as antenna 148 or 148'', or by steering the beam of the antenna in an implementation of a programmable antenna, such as antenna 148'. In either case the direction to the wireless device 120 can be determined based on the direction θ_1, where the antenna null is pointed at the wireless device 120. As shown, the null in the antenna pattern causes the signal strength data to dip in a recognizable way.

In an embodiment of the present invention, the direction θ_1 is determined based on the direction of lowest signal magnitude *M*. However other methodologies including pattern recognition can be employed to analyze the characteristics of the signal strength data to recognize the null direction.

FIG. 13 presents a schematic block diagram representation of adjunct device 100' in accordance with an embodiment of the present invention. In particular, a further embodiment of adjunct device 100 is shown that includes many common elements of the embodiment of FIG. 5 that are referred to by common reference numerals. In addition, adjunct device 100' includes a second short-range wireless transceiver 140' and a second antenna 169.

In this embodiment, the antenna 168 is an omnidirectional or substantially omnidirectional antenna and antenna 169' has either a fixed or steerable radiation pattern that includes a null, as described in conjunction with antennas 148, 148', 148'' or 169. In operation, when the adjunct device 100 sends paging signals 112 or receives paging signal 16, short-range wireless transceiver 140 is used and signals can be received from all directions. When the adjunct device is receiving location signals 114 from a remote wireless device 120, short-range wireless transceivers 140 and 140' are both engaged and generate separate signal strength data. A difference between the signal

strength data corresponding to antennas 168 and 148' is used to determine the null direction. In this fashion, the difference between the signal strength data from the two signal paths can be used to distinguish between high loss conditions and a direction corresponding to a null.

FIG. 14 presents a graphical representation of a difference signal in accordance with an embodiment of the present invention. In particular, signal strength $D(\theta)$ represents the difference between the magnitude of the signal strength data collected by short-range wireless transceivers 140 and 140' in response to location signal 114. Representing the signal strength generated by the short-range wireless transceiver 140 as $SS_o(\theta)$, and the signal strength of the short-range wireless transceiver 140 as $SS_n(\theta)$, the difference $D(\theta)$, can be determined based on:

$$D(\theta) = |SS_o(\theta)| - |SS_n(\theta)|$$

As discussed in conjunction with FIGs. 7-13, signal strength difference $D(\theta)$ is generated over a range of directions, such as over 360 degrees of rotation, either by manually steering the handheld wireless communication device 110 coupled to adjunct 100 in the case of a fixed antenna, or by steering the null of the antenna in an implementation of a programmable antenna. In either case the direction to the wireless device 120 can be determined based on the direction θ_1, where the antenna null is pointed at the wireless device 120. As shown, the null in the antenna pattern causes the difference in signal strength data to increase in a recognizable way.

In an embodiment of the present invention, the direction θ_1 is determined based on the direction of highest signal magnitude $D(\theta)$. However other methodologies including pattern recognition can be employed to analyze the characteristics of the signal strength data to recognize the null direction.

FIG. 15 presents a pictorial representation of handheld wireless communication device 110 and adjunct device 100 in accordance with an embodiment of the present invention. In particular, a display screen is shown that includes an indication of direction 166' that can be used in conjunction with the location application examples discussed in association with FIG. 7-14.

In this particular embodiment, the indication of direction 166' moves based on the repeated directional sweeps by a steerable antenna such as antenna 148'. Indication of direction 166' indicates, for instance, the direction θ_1 as previously discussed. As the user changes the orientation of the handheld wireless communication device 110, indication of direction 166' varies based on the updated direction θ_1. The indication of direction 166' can be used in this fashion to point the user in the direction of the wireless device 120.

It should be noted that while the embodiment of FIGs. 7-15 have discussed the use of one or more antennas with a null, an antenna with a single lobe pattern or a steerable lobe pattern could be employed in a similar fashion to detect signal peaks instead of signal nulls.

In yet another embodiment of the present invention, a single antenna 148 is employed that has an omnidirectional pattern at one frequency or range of frequencies, yet exhibits a null at another frequency or range of frequencies. In particular, a location signal, such as location signal 114, can be sent at frequency corresponding to the null pattern and received by short range wireless transceiver 140. Instead of switching antennas 168 and 169, or programming an antenna 148' to different patterns as described in conjunction with FIGs. 9-11, two different patterns can be implemented in the same antenna to support both omnidirectional and null modes of operation.

In a further embodiment of the present invention, a receive antenna is employed that includes a plurality of null directions at different compass points in two dimensions that are realized at different frequencies. For example, an antenna, such as antenna 148 can exhibit a plurality of null directions θ_i, that each have a corresponding null frequency f_i. In particular, a location signal, such as location signal 114, can include a swept frequency chirp that begins at a low frequency and ends at a high frequency that includes each of the discrete frequencies f_i. The short range wireless transceiver 140 can determine the direction to the remote device by detecting the frequency f_i where the null occurs, for example based on a lowest signal level, and correlating the null frequency, via a lookup table or other data structure, to the corresponding direction θ_i.

While the foregoing description has focused on location in a two dimensional sense, three-dimensional location can be accomplished in a similar fashion. In particular, directional antennas

can be employed in both the x-y and x-z or y-z planes to distinguish z-axis, as well as x and y axis, coordinates. It should be noted that multiple directional antennas can be employed that are arranged orthogonally or non-orthogonally as long as the null directions span either all or substantially all of three dimensional space or a portion of three dimensional space that is of interest. Further more complex antenna designs with three-dimensional antenna patterns can likewise be employed in a similar fashion to determine directionality in three-dimensions. Three dimensional location can be useful, for example, in locating objects on different floors of a building or other structure such as a mine or a ship, determining of a person with a remote device has fallen overboard, as well as other three-dimensional applications. In addition or alternative to providing three dimensional direction finding, multiple antennas can be employed in a diversity receiver that, for example includes two or more receivers. Such configurations can be employed to mitigate the effects of fading, multipath interference and other path losses to provide more stable reception of signals, and more stable measurement of signal strength, round trip signal delay, etc.

FIG. 16 presents a schematic block diagram of wireless devices 70 and 72 in accordance with an embodiment of the present invention. In particular, the devices 70 and 72 can each be either a wireless device 120 or an adjunct device 100. The two devices can be sold as a set and are pre-paired to communicate with one another. In another embodiment of the present invention, the user can configure the devices 70 and 72 to be paired with one another.

In pairing, one or both devices 70 and 72 initiate the pairing procedure. For example, a user interface, such as user interface 132 or 142 generates a pairing signal in response to an indication from a user to pair the devices. A short-range wireless transceiver, such as short-range wireless transceiver 130 or 140, communicates RF signals, such as pairing signals 116 to pair the devices 70 and 72.

While two devices 70 and 72 are shown, three or more devices can be paired together in this fashion to form a paging network. In one mode of operation, paging signals, such as paging signals 16 or 112 sent by a single device are received by all other devices and cause each of the receiving devices to generate a detectable alert signal. In another mode of operation, paging signals 16 or 112 can be generated that are addressed to a particular unit, based on addresses or

other identifiers received from or assigned to, each device during the pairing procedure. For example, each device 70, 72, . . . includes a unique device identifier that is shared with other devices during the pairing procedure. Paging signals, such as paging signals 16 or 112 can include the unique identifier to direct a paging signal to a particular device. In other words, when a device 70 or 72, receives a paging signal, it extracts the device identifier from the signal and compares it to its own device identifier stored in memory. If they match, the device emits a detectable alert. If the identifiers do not match, the page is presumed to be directed to another device and no alert is generated.

In an embodiment of the present invention, the paging signals 16 and/or 112 can further contain an identifier of the device that initiated the page. In this fashion, a device that receives a page and that is paired with multiple devices can determine which other device initiated the paging signal 16 or 112.

In an embodiment of the present invention, the paging signals 16 and/or 112 can also contain an paging data such as text, a text message, voice, graphics or other data that is conveyed from the device 70, 72 . . . that initiated the paging signal 16 or 112 and the device to the device that receives the page. This functionality creates the possibility of wireless device 120 and adjunct device 100 being used for applications, other than simply location of a lost object.

FIG. 17 presents a schematic block diagram of paging networks 90 and 92 in accordance with an embodiment of the present invention. In particular, paging network 90 includes devices 80-83 that have been paired together. In addition, paging network 92 includes devices 83-85 that have been paired together. The devices 80-85 can each be either a wireless device 120 or an adjunct device 100. As shown, device 83 has been paired with devices from both paging networks.

In a broadcast mode of operation, paging signals, such as paging signals 16 or 112 sent by a single device, are received by all other devices in a network and cause each of the receiving devices to generate a detectable alert signal. In this fashion, devices 80-83 can each page all of the remaining devices in paging network 90. Devices 83-85 can each page all of the remaining devices in paging network 92. In an unicast mode of operation, paging signals 16 or 112 can be

generated that are addressed to a particular unit, based on addresses or other identifiers received from or assigned to, each device during the pairing procedure. In this fashion, devices 80-83 can each page one of the remaining devices in paging network 90. Devices 83-85 can each page one of the remaining devices in paging network 92.

As discussed above, device 83 resides in both networks. Consequently, device 83 can be paged by a device from either network or can page devices from either network. However, in this configuration, device 80 from paging network 90 cannot page device 85 from paging network 92, and vice versa.

In an embodiment of the present invention, a device wishing to interact with another device repeatedly transmits a paging signal 16 or 112 for an interval of time greater than a listening device's wake-up-and-listen period. Say for example, a device wakes up every two seconds to "listen," the issuing device can transmit a paging signal 16 or 112 for three seconds. This strategy has obvious power consumption advantages.

While a paging application is discussed above, other applications, such as device tracking, can be enabled by the formation of paging networks 90 and 92 described above. Tracking can be implemented slightly differently. On wake-up, say every two seconds, a device transmits "tracking" information one time, then goes into listen mode to see if a paging signal 16 or 112 has been issued. The additional power consumption for the short transmit is nominal, as most of the power is consumed in the wake-up cycle itself. A device that "cares" to listen for location information can be placed into a state of listening for an extended time, say 3 seconds in our example, but it might do this only every 30 seconds, so this power hungry operation is not repeated very often. This tracking mode of operation allows a listening device to transmit useful information to any device that might care to take the time to listen periodically or on demand. In accordance with this example, a particular device 83 can be configured to track all other devices in the networks 90 and/or 92 in near real-time. The device 83 simply listens at appropriate intervals, as commanded, until all the desired information is collected from devices that are present in networks 90 and/or 92 without having to issue a paging signal 16 or 112, thus conserving battery power for both listener and talker.

In one application, the generation of location signals between devices can be used to determine if two devices are in proximity to one another. For example, devices 80-85 are associated with different people, objects, etc., and the location signals received by device 83 from devices 80-82 or 84-85, indicates which of these devices are present.

In this fashion, device 83 can determine which people or objects are in its proximity, or not in its proximity. For example, if device 83 is an adjunct associated with mom's wireless phone, device 80 is attached to the car keys and device 81 is an adjunct associated with her son's telephone, a mom can determine the proximity of her son and her keys. In response to location signals received by the adjunct device 83, the mom can determine whether or not her son and/or the car keys are in her proximity. A proximity application executed by her wireless phone can keep track of which of the devices 80-82 or 84-85 are in range and which are not, present alerts such as audible or visual alerts when a device comes in range or goes out of range, etc. In addition, the use of directional and/or distance information can augment the application to determine a nearest neighboring device or devices, plot estimated positions on a map, etc.

In addition to the applications listed above, other applications are possible including geo-caching and other social networking or gaming applications enabled by one or more devices that have been previously paired are auto-detected to determine the proximity of these devices and or the objects or persons associated therewith.

FIG. 18 presents a pictorial representation of a screen display 170 in accordance with an embodiment of the present invention. In particular, a screen display 170 is shown for display via a graphical user interface generated by a location application of handheld wireless communication device 110. As shown, the graphical user interface includes a menu that indicates the plurality of personal objects, that each correspond to one of a plurality of remote device such as devices 70 or 72, or devices 80-85.

In an embodiment of the present invention, the pairing procedure described in conjunction with FIGs. 16-17 generates a list that identifies the plurality of remote devices and the plurality of

personal objects. In particular, as a device is paired with the adjunct device 100, the location application of handheld wireless communication device queries the user to enter a name of an object or other identifier associated with the particular remote device being paired with the adjunct device 100. The names so entered are stored in the list in association with the device identifiers or other address information for the corresponding paired device that is either generated or received during the pairing process.

As shown, the paging menu is generated based on the list of objects – in this case, the objects identified 1-6. The user initiates a page to locate one of the objects via its wireless device 120 or adjunct device 100, by selecting the particular object from the menu.

FIG. 19 presents a pictorial representation of a screen display 172 in accordance with an embodiment of the present invention. In particular, a screen display 172 is shown for display via a graphical user interface generated by an application of handheld wireless communication device 110, such as a general paging application. As shown, the graphical user interface includes paging data received via paging signal 16 that indicates both the source of the page "Sue's Phone" and a text message, in this case, "Are you ready to leave?".

In operation, the text message is generated by a similar paging application of Sue's Phone that is coupled to its own adjunct device 100. The text message is included in the paging data and paging signals 112 sent via the adjunct device 100 of Sue's Phone. The paging data is received and decoded by the short-range wireless transceiver 140 of adjunct device 100 – associated with the handheld wireless communication device 110 that generates screen display 172. The processing module 141 passes the paging data via the device interface 144 and communication port 26' of handheld wireless communication device 110 to the paging application. In addition to generating the detectable alert signal via the user interface 142 of adjunct device, the screen display 172 is generated by the paging application of handheld wireless communication device. As shown, this feature provides greater functionality in support of more advanced and complex applications.

FIG. 20 presents a schematic block diagram of a wireless device 122 and adjunct device 101 in accordance with an embodiment of the present invention. In particular, wireless device 122

and adjunct device 101 include each of the components of wireless device 120 and adjunct device 100 previously described. In addition, the wireless device 122 and adjunct device 101 include short-range wireless transceivers 130' and 140' that each include infrared (IR) transmitters for sending IR signals, such as IR signals 182 and 183 to a remote device, such as device 94. Device 94 can be an automobile, alarm system, audio component, video component, game or other home media device or other device that is controlled in response to IR signals from an IR remote controller.

In an embodiment of the present invention, the adjunct device 100 is coupled to a handheld wireless communication device 110 that executes a remote control application that operates in a similar fashion to a universal remote control device for controlling the operation of a device 94 that operates based on IR remote control signals. In operation, the device interface 144 receives application data from the remote control application of the handheld wireless communication device 110 via the communication port of the handheld wireless communication device 110. The application data includes remote control data for controlling the operation of device 94. While a single device 94 is shown, the handheld wireless communication device 110 and adjunct device 101 can control a plurality of such devices in a similar fashion.

In an embodiment of the present invention, the short-range wireless transceiver 140' generates IR signals 182 based on the remote control data to directly control the operation of device 94. In a further embodiment, adjunct device 101 is paired with wireless device 122 to operate as an IR relay device. In this embodiment, the remote control data is transmitted via short-range wireless transceiver 140 via RF signals 180. Short-range wireless transceiver 130 receives and decodes the remote control data and retransmits the remote control data as IR signals 183 via short-range wireless transceiver 130'. In this further embodiment, the wireless device 122 can be located in close proximity and within line of sight with the device 94. The adjunct device 101 and handheld wireless communication device 110 can control the operation of device 94 from a different room or otherwise, while wireless device 122 is in range of RF signals 180.

While the foregoing description has focused on IR devices, in a similar fashion, devices 101, 122 and/or device 92 can include a short range wireless transceiver 130' or 140', such as a

Bluetooth transceiver, 802.11 transceiver or other wireless transceiver that operates via RF signals. In one application, devices 101, 122 and/or device 92 can control a compatible remote device, such as device 94. In addition, the RF implementation of short-range wireless transceiver 130‘ or 140’ can be used for other uses. In an embodiment of the present invention, paging signals or other messages can be transmitted to a home computer via a Bluetooth or 802.11 connection and relayed indirectly to the handheld wireless communication device 110 via the internet, wireless local area network and/or the long range wireless transceiver of the handheld wireless communication device 110.

FIG. 21 presents a schematic block diagram of devices 91, 93 and 94 in accordance with an embodiment of the present invention. In an embodiment of the present invention device 91 is implemented via adjunct device 101 and handheld wireless communication device 110, and device 93 is implemented via either wireless device 122 or adjunct device 101 and handheld wireless communication device 110 operating in a similar fashion to wireless device 122.

In a similar fashion to the system of FIG. 20, device 91 is paired with wireless device 93 to operate as an IR relay device. Remote control data is transmitted via RF signals 180. Device 93 receives the RF signals 184 and decodes the remote control data and retransmits the remote control data as IR signals 186 to control device 94.

FIG. 22 presents a pictorial representation of a screen display 190 in accordance with an embodiment of the present invention. In particular, a screen display 190 is shown that is generated by a remote control application for display on handheld wireless communication device 110. As shown, the user interacts with the remote control setup menu to enter one or more devices to be emulated. In the example shown, a hypothetical “Cony 1200XR DVR” device is selected. In response to the selection, the remote control application retrieves a remote control data configuration for this device from memory, such as the memory 143 of adjunct device 100 or the memory of the handheld wireless communication device so that remote control data transmitted as either RF signals 180 or IR signals 182 are properly formatted for control of the selected device. In an embodiment of the present invention, instead of storing remote control configuration data locally, the application contacts a remote server via the internet to retrieve the remote control

configuration data. In this fashion, the long range transceiver or other wireless transceiver of handheld wireless communication device 110 can be used to gather remote control configuration data from an up to date list of current and legacy devices.

In a further mode of operation, remote graphics data corresponding to the look of the native remote control device for the selected "Cony 1200XR DVR" is also retrieved from memory, such as the memory 143 of adjunct device 100, the memory of the handheld wireless communication device, or from a remote server as described above. This remote graphics data can be used by the remote control application for emulating the look of the native remote control device for the selected "Cony 1200XR DVR", as will be shown further in conjunction with FIG. 23.

While not shown, the set-up menu may further prompt the user to establish one or more tasks to be performed by one or more devices to be controlled. In response, to these selections and the remote control configuration data retrieved for each device, the application can automatically establish a macro program to implement each task. In an example involving the control of a home media center, tasks might include: playing a DVD, watching TV, playing a CD, listening to the radio, playing a stored audio file or stored video file, accessing the internet to listen to streaming audio, accessing the internet to watch a streaming video, etc. For each selected task, the application configures the specific remote control operations required to control the devices of the home media center to states that correspond to the particular task.

In addition to task selection, the set-up menu may further prompt the user to establish one or more groups of devices to be controlled, and set up tasks associated with each group. For example, one group of devices might include the home media center in the living room, a second group of device might include the stereo in the bedroom, a third group of devices might include the lights in the dining room, etc.

FIG. 23 presents a pictorial representation of a screen display 192 in accordance with an embodiment of the present invention. In particular, a screen display 192 is shown that is generated by a remote control application for display on handheld wireless communication device 110. As shown, the display of handheld wireless communication device 110 creates a virtual remote control

that emulates the look of the native remote control device for the device selected to be controlled – in this case, the "Cony 1200XR DVR". In operation, the user interacts with the virtual remote control to generate remote control data for controlling the selected device, either directly from adjunct device 100 or via an IR relay device such as wireless device 122.

In an alternative embodiment involving one or more tasks established as described in conjunction with FIG. 22, the screen display be "task oriented" instead of device oriented as shown in FIG. 23. For each selected task, the remote control application configures the screen display of the handheld wireless communication device 110 to implement a menu of the particular remote control commands associated with that particular task.

For instance, the user can be presented with a menu of groups that have been configured. Once a group has been selected, a menu of tasks associated with that group is presented. Once a particular task is selected, the menu presents user options to control the particular actions associated with the selected task. For example, when a "watch TV" task is selected, the user can be presented options to increase or decrease the TV volume, change the channel, go to an electronic program guide, etc. In a further example, when a "play a DVD" task is selected, the user can be presented options to increase the volume, decrease the volume, play, stop, pause, eject, fast forward, skip to the next section, go to the main menu, etc. It should be noted that each task may routinely involve the control of multiple devices of the home media center, and the particular actions associated with the selected task may require different devices of the home media center to be controlled.

FIG. 24 presents a schematic block diagram of a wireless device 123 and adjunct device 103 in accordance with an embodiment of the present invention. In particular, adjunct device 103 includes each of the components of adjunct device 100 previously described. In addition, the adjunct device 103 includes short-range wireless transceiver 140'' that includes a transmitter for RF signals that contain home automation data. Device 123 includes similar components to wireless device 120 but further contains a control interface 134, such as a relay, triac, transistor or other control device for controlling the operation of device 214, such as a lamp or other home lighting, an appliance, a thermostat, or other home device. In an embodiment of the present

invention, the wireless device 123 is paired with the adjunct device 103 and operates in a similar fashion to a Homelink, Insteon or other home automation device controller to control the operation of an external device 214 in response to RF signals 200 from adjunct device 103.

In an embodiment of the present invention, the adjunct device 100 is coupled to a handheld wireless communication device 110 that executes a home automation application for controlling the operation of a device 214. In operation, the device interface 144 receives application data from the home automation application of the handheld wireless communication device 110 via the communication port of the handheld wireless communication device 110. The application data includes control data for controlling the operation of device 214 via wireless device 123. While a single device 214 is shown, the handheld wireless communication device 110 and adjunct device 101 can control a plurality of such devices in a similar fashion. The short-range wireless transceiver 140'' generates RF signals 200 based on the control data to control the operation of the device coupled to device 123. The adjunct device 101 and handheld wireless communication device 110 can control the operation of device 214 from a different room or otherwise, while wireless device 123 is in range of RF signals 200.

FIG. 25 presents a schematic block diagram of devices 210, 212 and 214 in accordance with an embodiment of the present invention. In an embodiment of the present invention device 210 is implemented via adjunct device 103 and handheld wireless communication device 110, and device 212 is implemented via a home automation device controller. In a similar fashion to the system of FIG. 24, device 210 is paired with wireless device 212 to operate in a home automation mode. Control data is transmitted via RF signals 200. Device 212 receives the RF signals 200 and decodes the control data to control device 214.

FIG. 26 presents a pictorial representation of a screen display 220 in accordance with an embodiment of the present invention. In particular, a screen display 220 is shown for display via a graphical user interface generated by a home automation application of handheld wireless communication device 110. As shown, the graphical user interface includes a menu that indicates the plurality of devices 214 to be controlled, that each correspond to one of a plurality of devices 212.

In an embodiment of the present invention, the pairing procedure described in conjunction with FIG. 25 generates a list that identifies the plurality of devices 212 and the plurality of devices 214. In particular, as a device 212 is paired with the adjunct device 100, the home automation application of handheld wireless communication device queries the user to enter a name of an object or other identifier of the device 214 associated with the device 212 being paired with the adjunct device 100. The names so entered are stored in the list in association with the device identifiers or other address information for the corresponding paired device 212 that is either generated or received during the pairing process.

As shown, the home automation menu is generated based on the list of devices 214 – in this case, the devices identified 1-6. The user initiates the control of a device 214 via its wireless device 120 or adjunct device 100, by selecting the assigned name of the device 214 from the menu.

While not shown, the set-up menu may further prompt the user to establish one or more tasks to be performed by one or more devices to be controlled. These tasks might include: watching TV, reading a book, having a party, etc. For each selected task, the application configures the specific remote control operations required to control the devices of the home to states that correspond to the particular task. In the watching TV task, the lights might be dimmed to a particular level, particular lights might be turned on for reading a book. For a party, all of the lights might be turned in areas of the home associated with entertaining while the temperature of the heating and cooling system may be decreased to compensate for the additional heat produced by the guests themselves.

As discussed in conjunction with the remote control application, in addition to task selection, the set-up menu may further prompt the user to establish one or more groups of devices to be controlled, and set up tasks associated with each group. For example, one group of devices might include the living room lighting, a second group of device might include outdoor lighting, a third group of devices might include the home heating/cooling system, etc.

Further, the set-up menu may further prompt the user to establish one or more complex tasks. The operation of lights, TV's, and the like, can be logged over time. This log could be re-played in "vacation-mode" to give a more realistic simulation of being home, compared with the use of timers, not to mention the increased convenience of this method. In addition to remote control and/or home automation devices, the tasks can further involve interaction with one or more remote wireless devices such as remote wireless device 120. For instance, a more complex task might include, turning on an overhead light when a person carrying the remote wireless device enters a room between the hours of x and y, but during other hours illuminate the night light, otherwise turn off all lights.

FIG. 27 presents a pictorial representation of a screen display 222 in accordance with an embodiment of the present invention. In particular, a screen display 222 is shown for display via a graphical user interface generated by an application of handheld wireless communication device 110, such as a general paging application. As shown, the graphical user interface includes an identified device 214 "Bedroom Lamp" and interactive controls for controlling the operation of the selected device 214.

In operation, control data is generated by the home automation application is response to the user's interaction with the screen 222. The control data is passed from the handheld wireless communication device to the adjunct device 103 via the communication port and the device interface 144. RF signals 200 containing the control data are generated by short-range wireless transceiver 140'' and transmitted to the device 212 for control of the selected device 214.

In an alternative embodiment involving one or more tasks established as described in conjunction with FIG. 26, the screen display be "task oriented" instead of device oriented as shown in FIG. 27. For each selected task, the home automation application configures the screen display of the handheld wireless communication device 110 to implement a menu of the particular home automation commands associated with that particular task. For instance, the user can be presented with a menu of groups that gave been configured. Once a group has been selected, a menu of tasks associated with that group is presented. Once a particular task is selected, the menu presents user options to control the particular actions associated with the selected task.

FIG. 28 presents a pictorial representation of handheld wireless communication device 110 and adjunct device 100 in accordance with an embodiment of the present invention. In particular, handheld wireless communication device 110 includes a wireless telephony transceiver and further includes a wireless telephony application for sending and receiving telephone calls via the wireless telephony transceiver in communication with a wireless telephony network.

The wireless telephony application receives a 911 signal generated by the adjunct device 100 via the communication port of the handheld wireless communication device 110. In particular, the 911 signal can be generated in response to a user interaction with the user interface 142 of the adjunct device 100 – such as by the user pressing an emergency call button on the adjunct device 100. In response to the 911 signal from the adjunct device, the wireless telephony application initiates an emergency call, such as a 911 telephone call, or other emergency call. In addition, emergency call can be initiated to a monitoring service as an alternative to a traditional 911 call. In this fashion, a telephone call such as an automated voice call or other call, SMS message, text message, email or other communication can be initiated to alert the service to an emergency or distress situation. The monitoring service can include an eldercare monitoring service that can respond via its own resources to emergency or distress calls. In addition or in the alternative, the monitoring service can itself initiate a 911 call in response to the receipt of the emergency call from the handheld wireless communication device 110. As will be understood by one skilled in the art, the emergency call, can include location information, such as GPS coordinates or other position information that is relayed to the monitoring service, or the 911 call center to facilitate the location of the handheld wireless communication device 110 that initiated the emergency call.

In this fashion, the user of handheld wireless communication device 110 with adjunct device 100 need only to press a single button on the adjunct device to launch an emergency call, saving time in the event of an actual emergency.

In a further embodiment of the present invention, the handheld wireless communication device 110 can initiate an emergency call in response to the activation of a remote wireless device 120, for example, by the user pressing an emergency call button on the remote wireless device

120. In particular, the wireless device 120 transmits a special paging signal, similar to paging signal 16, that includes data or another indication that an emergency call should be initiated. When the adjunct device 100 receives the special paging signal, the adjunct device communicates the 911 signal to the handheld wireless communication device 100 to initiate the 911 call, as if an emergency call button of the adjunct device 100 had been directly pressed by the user as described above.

As discussed in conjunction with FIG. 5, the adjunct device 100 can include a device interface 144 that is switchable between an auxiliary power mode and a battery isolation mode. In the battery isolation mode, the device interface 144 decouples the battery 146 from the battery of the handheld wireless communication device 110, for instance, to preserve the charge of battery 146 for operation even if the battery of the handheld wireless communication device 110 is completely or substantially discharged. In the auxiliary power mode, the device interface 144 couples the power from the battery 146 to the handheld wireless communication device 110 via the communication port to charge the battery of the handheld wireless communication device 110. In an embodiment of the present invention, activation of the emergency call feature in the adjunct device 100 can automatically initiate a switch of the device interface 144 to the auxiliary power mode to support emergency calling. In a further embodiment, if the device interface 144 detects a low battery condition during an emergency calling event, the device interface 144 can automatically switch to auxiliary power mode to support emergency calling.

FIG. 29 presents a pictorial representation of handheld wireless communication device 110 and adjunct device 100 in accordance with an embodiment of the present invention. In particular, adjunct device 100 includes a plurality of infrared emitters 240 that emit a corresponding plurality of infrared signals, such as IR location signals 242 for use by a sensor coupled to a screen to generate a screen pointer graphic on the display screen. The adjunct device 100 provides feedback to a video device on the position, orientation and or the perspective of the user and/or to otherwise allow the user to interact with a media application on a remote monitor, television or other display device.

The plurality of infrared emitters 240 can be implemented using IR light emitting diodes that emit light with a wavelength of 880 nM, however, other infrared emitters can likewise be used. The plurality of infrared emitters 240 can be arranged in a row, a grid or other pattern to facilitate a remote device to determine the position, orientation and or the perspective of the handheld wireless communication device 110 and/or by inference, the user of the handheld wireless communication device 110.

In an embodiment of the present invention, the handheld wireless communication device 110 includes a processor that executes a screen pointer application or other application and wherein the plurality of IR emitters 240 are controlled based on application data from the screen pointer application received by the adjunct device 100 via the communication port of the handheld wireless communication device 110 and device interface 144. In this fashion, the IR emitters 240 can be selectively enabled or disabled. In addition, the IR emitters can be used in conjunction with other applications such as short-range wireless transceiver 140', an infrared data association (IrDA) transceiver or to support other applications of the adjunct device 100 and handheld wireless communication device 110. While a particular form factor for adjunct device 100 is shown, as previously discussed, adjunct 100 can likewise be implemented as a case that encloses a portion of the handheld wireless communication device 110.

Further examples of this embodiment, including the interoperability between the adjunct device 100 and a display screen are presented in conjunction with FIG. 30 that follows.

FIG. 30 presents a pictorial representation of screen pointing system in accordance with an embodiment of the present invention. In particular, a handheld device 256, such as handheld wireless communication device 110 equipped with adjunct device 100 emits IR location signals 242, that are viewed by video camera 250. In an embodiment of the present invention, video camera 250 includes a charged coupled device (CCD) array that responds to the infrared location signals 242. In particular, an infrared sensor such as video camera 250 generates a video signal that includes bright spots corresponding to each of the IR emitters 240. In an embodiment of the present invention, the video camera 250 includes an infrared filter such as a plastic window injected with an infrared die that allows transmission of infrared light through the window while

filtering visible light and other light wavelengths. In this fashion, other light sources can be attenuated providing a clearer video image of the IR emitters 240.

Video device 254 receives the video signal from video camera 250 and analyzes the video signal to determine the position and/or orientation of the IR emitters 240 in the video image. In response, the video device 254 generates a graphical overlay for display screen 252 of the screen pointer that appears on the display screen 252. In this fashion, as the position of the handheld device 256 changes, the position of the screen pointer displayed on display screen 252 changes as well. Further, changes of orientation, such as the rotation of the handheld device 256 about roll, pitch or yaw axes can be detected and used to adjust the orientation of the screen pointer.

In an embodiment of the present invention, the video device 254 can include a video game console, computer, set top box, digital video disc player or other video device that operates in conjunction with a display screen 252. While shown as separate elements, the video camera 250 and/or video device 254 can both be incorporated within a display screen 252, such as a television or computer monitor.

It should also be noted that, in other embodiments, the positioning of the video camera 250 and the IR emitters 240 can be reversed. In particular, the plurality of IR emitters 242 can be placed above the display screen 252 and the handheld device 256 can include video camera 250. In the embodiment where handheld device 256 is implemented via handheld wireless communication device 110 and adjunct device 100, the short-range wireless transceiver 140 of adjunct device 100 or other wireless transceiver of adjunct device 100 or handheld wireless communication device 110 can be used to send the video signal produced by the video camera 250 wirelessly to a complementary wireless transceiver included in video device 254.

While the foregoing description has focused on a screen pointer application, other applications including the display of three-dimensional video content including 3D movies or video games can also be adapted to the use of position and directional information of a player or viewer. In particular, in presentations with a single player or viewer, the video content displayed

on display screen 252 can be transformed based on the position and/or orientation of the handheld device 256 to present the illusion of a three-dimensional display.

For example, the handheld device 256 can be replaced by an alternative device such as glasses, a hat or other object that tracks the position and/or orientation of a user's head. Objects in the background of either a static or dynamic video image can be shifted up when the user's head moves down, and shifted right when a user's head moves left to provide the illusion, via the two-dimensional display screen, that the user is interacting with a three-dimensional virtual world. It should be noted that such an embodiment can be implemented without polarized or colored lenses or other optical filtering used in conjunction with standard three-dimensional programs.

FIG. 31 presents a schematic block diagram of video device 254 in accordance with an embodiment of the present invention. In particular, video device 254 includes pattern recognition module 260, position/orientation generator 264, and graphics overlay generator 268. In operation, video device 254 receives the video signal from video camera 250. Pattern recognition module 260 analyzes frames of the video image to recognize the line, grid or other pattern of the IR emitters 240 in the frames, based on the bright spots produced by IR location signals 242.

After the bright spots produced by IR location signals 242 are located, position/orientation sensor 264 generates position and/or orientation signals corresponding to, for instance, x, y, and z-axis translations and roll, pitch and yaw axis orientations of the handheld device 256. These position and/or orientation signals are presented to graphics overlay generator 268, that generates a graphic, such as a screen pointer graphic, curser, icon or other graphic corresponding to the position and/or orientation determined by position/orientation generator 264. In addition, graphics overlay generator 268 overlays the generated graphic on video signal 262 to generate a video output signal to display device 252. The video input signal can be a locally generated video input signal in embodiments where the video device 254 is a video game console, computer, set top box, digital video disc player or other video device generates its own video signals. In the alternative, video signal 262 can be coupled from an external source such as a video game console, computer, set top box, digital video disc player or other video device that operates in conjunction with a display screen 252.

The video signal from video camera 250, video signal 262 and the video output to video display device 252 can each be analog or digital video signals. While not expressly shown, video device 254 can include one or more video decoders, video encoders or video transcoders for converting the video format, frame rate and/or resolution of the video signal from video camera 250, video signal 262 and the video output to video display device 252 for processing in conjunction with video device 254.

In the embodiment discussed in conjunction with FIG. 30 where position and orientation information is used to present the illusion of three-dimensions, video device 254 can include a transformation generator in place of graphics overlay generator 268. In particular, the transformation generator can transform the video signal 262, based on the position and/or orientation determined by position/orientation generator 264 to present a video output signal that video display device 252 that presents the illusion of three-dimensions, without the need for polarized or colored lenses or other optical filtering.

The components of video device 254 can be implemented using a microprocessor, micro-controller, digital signal processor, microcomputer, central processing unit, field programmable gate array, programmable logic device, state machine, logic circuitry, analog circuitry, digital circuitry, and/or any device that manipulates signals (analog and/or digital) based on operational instructions that are stored in memory. Note that when the components of video device 254 implement one or more functions via a state machine, analog circuitry, digital circuitry, and/or logic circuitry, the memory storing the corresponding operational instructions may be embedded within, or external to, the circuitry comprising the state machine, analog circuitry, digital circuitry, and/or logic circuitry. Video device 254 can include additional components that are not expressly shown.

FIG. 32 presents a schematic block diagram representation of a location system in accordance with an embodiment of the present invention. In particular, a layout is shown of a building that includes a plurality of paging devices 270, 272, 274, 276, 278 and 280 that have been paired together to form a paging network. Each of the paging devices 270, 272, 274 and 276 is a

stationary device that is positioned in a fixed location, such as being attached to a wall or ceiling, or placed in another location that is stationary. The paging devices 270, 272, 274 and 276 can each be implemented, for instance, via any of the embodiments of wireless device 120. The paging device 278 is a mobile paging device to be located. In particular, paging device 278 can be implemented via either any of the embodiments of wireless device 120 or adjunct device 100 and handheld wireless communication device 110.

After these devices have been paired, the mobile paging device 278 can be located as follows. A paging signal, such as paging signal 16 or 112 is transmitted to the paging device 278 by paging device 280. The paging device 280 can either be a fixed paging device or mobile paging device having a short-range wireless transmitter capable of transmitting such a paging signal -- such as any of the embodiments of wireless device 120 or adjunct device 100 and handheld wireless communication device 110. In an embodiment of the present invention, the paging signal includes a broadcast listen command. The broadcast listen command can, for example, instruct the fixed paging devices 270, 272, 274 and/or 276 to beginning listening for a location signal from the device to be located. In response to the paging signal, the mobile paging device 278 generates the location signal, such as location signal 114 or other location signal generated by an adjunct device 100.

The location signal is received by one or more of the fixed paging devices 270, 272, 274 and/or 276. In response, the fixed paging devices 270, 272, 274 and/or 276 that received the location signal generate location information that is transmitted to the paging device 280. The paging device 280 receives location information pertaining to the mobile paging device 278 via its short-range wireless receiver. In response, the paging device 280 determines a location of the mobile paging device 278 based on the location information.

In an embodiment of the present invention, the location information includes directional information gathered by one or more of the fixed paging devices 270, 272, 274 and/or 276 that describe a direction between that fixed paging device and the mobile paging device 278. When directional information is received by two or more of the fixed paging devices 270, 272, 274 and/or

276, the paging device 280 can triangulate the position of the mobile paging device in two dimensions, based on the directional information.

In an embodiment of the present invention, the fixed paging devices are each implemented via a wireless device 120 that includes an antenna 138, such as antenna 148' that is programmable. In this embodiment, wireless device 120 operates in a similar fashion to adjunct device 100 and handheld wireless communication device 110 described in conjunction with FIGs. 7-15 to locate a remote paging device that is transmitting a location signal, such as location signal 112.

For example, the processing device 131 of a particular fixed paging device 270, 272, 274 or 276, generates control signals 163 to scan a null or lobe of the programmable antenna 148' over different orientations, determines signal strengths corresponding to the different orientations and determines a direction θ_1, between the particular fixed paging device and the mobile paging device 278, based on a lowest or highest signal strength M, lowest or highest differential signal strength $D(\theta_1)$, etc. Each such fixed paging device 270, 272, 274 or 276 generates directional information that indicates the direction θ_1, and transmits this data to the paging device 280 for analysis. In an embodiment of the present invention, the paging device 280 stores the position of each of the fixed paging devices 270, 272, 274 and 276, and uses this information in conjunction with each of the received directions θ_1, to triangulate the location of the mobile paging device 278.

In another embodiment of the present invention, the fixed paging devices 270, 272, 274 and 276 generate location information that includes signal strength information of the received location signal from mobile paging device 278. The fixed paging devices 270, 272, 274 and 276 transmit this information to the paging device 280. In response, the paging device 280 determines which of the fixed devices 270, 272, 274 and 276 has the greatest signal strength. In this fashion, the paging device can infer that the mobile paging device 278 is closest to the fixed paging device 270, 272, 274 or 276 having the greatest signal strength.

It should be noted that the handheld wireless communication device 110 can include an internal compass that generates an indication of its own orientation. This orientation information

can also be used in conjunction with the received directions θ_1, to triangulate the location of the mobile paging device 278 or provide absolute directional information.

The location system of FIG. 32 enables many interesting applications. For example, a restaurant can be equipped with a plurality of fixed paging devices that are paired with a plurality of mobile paging devices and a master console that operates as paging device 280. When a customer enters the restaurant, he or she is assigned a mobile paging device, such as mobile paging device 278. The master console can be used to page the mobile paging device when a table is ready. When the customer is assigned a table, the customer continues to use the mobile paging device 278. For instance, the mobile paging device 278 can be used to initiate pages to the master console to place an order or supplement an existing order, to request a server, etc. In conjunction with these activities, the location system provided by the fixed paging devices can be used to locate the mobile paging device, correlate the location to a table and server, locate a lost paging device, etc.

In other applications, the location system of the present invention can be used in conjunction with the location of persons in hospitals, nursing homes and hospices; the location of files or records in an office building; or the location of boxes or inventory in a warehouse or manufacturing facility or for a host of other applications. In pertinent part, the mobile paging device 278 is constructed with a form factor that can be enclosed in or attached to an object, person or other thing to be located.

It should be noted further that the applications described above can alternatively be implemented without the use of a fixed network of paging devices. A remote wireless device 120 or adjunct device 100 can be associated with each table via a table ID or other data structure. A notebook computer, wireless telephone, iPad device other handheld wireless computing device 110 can be paired with and used to receive pages or other signaling to monitor each of the remote wireless devices 120 and overlay information on a map or other layout of the restaurant's layout. This provides a simpler implementation without the need of a plurality of fixed paging devices. In this case, the table ID provides the location information used to identify the table associated with each mobile device.

It should be specifically noted that the emergency monitoring functionality described in conjunction with FIG. 28 can be combined in the implementations above for applications in a hospital, hospice, nursing home or other care facility. Location and tracking information gathered as described above can be combined with emergency calling to a monitoring center or other emergency messaging to inform a monitoring center of an emergency event and further to provide enhanced location information.

In a further embodiment, accelerometer information from the handheld wireless communication device 110, such as an iPhone can be used to trigger an emergency call. For example, if a period of inactivity is detected based on a lack of motion over an inactivity period, such as 30, 60, or 90 minutes, a fail-safe distress call can be initiated to the monitoring center to check on the person associated with the device.

While the foregoing description has focused on emergency calling, other automatic calling and alerts can also be implemented in accordance with various implementations of the present invention. In particular, the pairing procedure described in conjunction with FIG. 18 can be expanded to set-up additional options such as those described below.

1) If Sue's phone is not located at home at a particular time (such as when Sue should be home from school in the afternoon), as determined by proximity to one or more fixed paging devices 270, 272, 274, 276, etc., initiate a text message, email, telephone call or other communication to Mom's phone.

2) If Sue's phone initiates a 911 call, automatically broadcast a paging signal 112 to all remote devices 120.

3) If Sue's phone initiates any telephone call or text message after 11:00pm at night, initiate a paging signal to Mom's phone that indicates a call or text message and the destination number.

As discussed in conjunction with FIG. 20, the RF implementation of short-range wireless transceivers 130‘ and 140’ can be used for other uses. In an embodiment of the present invention, distress signals, emergency calling signals and other automatic messages and alerts can be transmitted to a home computer via a Bluetooth or 802.11 connection and relayed indirectly to the handheld wireless communication device 110 via the internet, wireless local area network and/or the long range wireless transceiver of the handheld wireless communication device 110.

FIG. 33 presents a schematic block diagram of a handheld wireless communication device 300 in accordance with an embodiment of the present invention. While many of the descriptions of the present invention contained herein focus on functions and features ascribed to an adjunct device operating in conjunction with a handheld wireless communication device, the functions and features of the adjunct device handheld wireless communication device combination can be implemented in an enhanced handheld wireless communication device that includes structure and functionality drawn from an adjunct device, such as adjunct devices 100, 100’, 101 and 103. Handheld wireless communication device 300 presents such a device that includes a handheld wireless communication device portion having the standard components of a handheld wireless communication device and an adjunct portion that adds the components necessary to provide the additional functions and features of the adjunct device 100, 100’, 101 and 103. In summary, handheld wireless communication device 300 includes the structure and functionality of any of the embodiments of handheld wireless communication device 110 and adjunct device 100, 100’, 101 and 103, within a single housing, and without the external connections required to couple adjunct device 100, 100’, 101 or 103 to handheld wireless communication device 110.

In particular, handheld wireless communication device 300 includes long range wireless transceiver module 306, such as a wireless telephony receiver for communicating voice and/or data signals in conjunction with a handheld wireless communication device network, wireless local area network or other wireless network. In addition, handheld wireless communication device 300 includes a user interface 312 that include one or more pushbuttons such as a keypad or other buttons, a touch screen or other display screen, a microphone, speaker, headphone port or other audio port, a thumbwheel, touch pad and/or other user interface device. User interface 312 includes the user interface devices ascribed to handheld wireless communication device 110 and further

provides the functionality and/or structure of the user interface devices 142 described in conjunction with adjunct device 100, 100', 101 and 103.

Handheld wireless communication device 300 includes a main battery 308 that operates in a similar fashion to the battery of handheld wireless communication device 110, while a separate battery 146 provides the functions and features described in conjunction with adjunct device 100, 100', 101 and 103. For example, in isolation mode, battery 146 provides power to the adjunct portions of handheld wireless communication device 300, while main battery 308 provides power to the wireless telephony portions of the handheld wireless communication device 300. Device interface 310 functions as device interface 310 without, however, an internal communication port and plug connection between the adjunct device 100 and handheld wireless communication device 110. Short-range wireless transceiver module 304 includes one or more short-range wireless transceivers such as short-range wireless transceivers 140, 140', 140'', etc.

The handheld wireless communication device 300 includes a processing module 314 that operates in conjunction with memory 316 to execute a plurality of applications including a wireless telephony application and other general applications of the handheld wireless communication device and other specific applications described in conjunction with the operation of adjunct device 100, 100', 101 and 103 and handheld wireless communication device 110.

The processing module 314 can be implemented using a microprocessor, micro-controller, digital signal processor, microcomputer, central processing unit, field programmable gate array, programmable logic device, state machine, logic circuitry, analog circuitry, digital circuitry, and/or any device that manipulates signals (analog and/or digital) based on operational instructions that are stored in memory, such as memory 316. Note that when the processing module 314 implements one or more of its functions via a state machine, analog circuitry, digital circuitry, and/or logic circuitry, the memory storing the corresponding operational instructions may be embedded within, or external to, the circuitry comprising the state machine, analog circuitry, digital circuitry, and/or logic circuitry. Further note that, the memory module 316 stores, and the processing module 314 executes, operational instructions corresponding to at least some of the steps and/or functions illustrated herein.

The memory module 316 may be a single memory device or a plurality of memory devices. Such a memory device may be a read-only memory, random access memory, volatile memory, non-volatile memory, static memory, dynamic memory, flash memory, cache memory, and/or any device that stores digital information. While the components of handheld wireless communication device 300 are shown as being coupled by a particular bus structure, other architectures are likewise possible that include additional data busses and/or direct connectivity between components. Handheld wireless communication device 300 can include additional components that are not expressly shown.

Further, while the present invention has been described in conjunction with a handheld wireless communication device 300 or 110, it should be noted that the functions and features of the present invention can be implemented in conjunction with an adjunct device coupled to another mobile or stationary computing device capable of executing one or more of the applications described herein in conjunction with handheld wireless communication device 110 or in an another integrated device that includes one or more functions and features of adjunct device 100, 100', 101 and 103 and handheld wireless communication device 110.

FIG. 34 presents a pictorial representation of a back view of an adjunct device 330 in accordance with an embodiment of the present invention. In particular, adjunct device 330, such as adjunct device 100, 100', 101 and/or 103, is implemented as a case for an Apple iPhone, iPod or iTouch device. The case includes a camera hole for the camera of the iPhone, an external device connector 334, such as communication port 28' implemented as a micro-USB port. An audio port 336 is included for a beeper, buzzer or other sound emitter included in user interface 142. IR port 332 is included for coupling to the emitters/detectors of short-range wireless transceiver 140', IR emitters 240, or a video camera that operates in an embodiment of FIGs. 29 - 30, where the IR emitters are mounted in association with the display screen 252.

FIG. 35 presents a pictorial representation of a cutaway side view of an adjunct device 330 in accordance with an embodiment of the present invention. As shown, the adjunct device 330 includes a connector 340, that operates in a similar fashion to plug 26 to couple the adjunct device

330 to the communication port of the Apple iPhone, iPod or iTouch device. The case is constructed of a flexible plastic or other flexible material so as to be clipped onto the iPhone, iPod or iTouch device, while enclosing the back, sides, top and bottom of the iPhone, iPod or iTouch device, yet leaving open substantially all of the front to allow the user to interact with the touch screen and optionally the front panel button of the device. Internal components 338 include the components of adjunct device 100, 100', 101 and/or 103. The internal components 338 can include one or more flexible circuit boards to support the flexibility of adjunct device 330, without damage to the components of adjunct device 330.

While not expressly shown, the adjunct device 330 includes one or more other ports to provide user access to the headphone jack, power button, speaker and microphone of the iPhone, iPod or iTouch device. While the adjunct device 330 is shown as a case for an Apple iPhone, iPod or iTouch device, similar adjunct devices are possible for use with other handheld wireless communication devices and handheld devices in accordance with the present invention.

FIG. 36 presents a pictorial representation of a front view of a wireless device 325 in accordance with an embodiment of the present invention. In particular, a wireless device 325, such as wireless device 120, 122 or 123, includes a keychain hole 328. In addition, wireless device 325 includes audio emitter 322, LED 326 and push button 324 that are included in user interface 132. Infrared port 320 is coupled to an infrared wireless transceiver, such as short-range wireless transceiver 130'. While not shown, the wireless device 325 includes a back connector interface for connection to an external charger for charging an internal rechargeable battery.

As previously discussed, the wireless device 325 can be implemented using a ZigBee short-range wireless transceiver that operates in conjunction with the RF4CE standard. When the button is pressed and released on a wireless device 325, a broadcast message will be sent to all devices in its paging network. Paging commands can use the NLDE-Data request primitive as described in section 3.1.1.1 of the RF4CE specification with the TxOptions: Broadcast, IEEE Address, Acknowledged, Security on, Single Channel, Specify. A broadcast message can optionally be sent from the adjunct 330 as well, or specific items can be paged. If specific items are targeted, then the PairingRef field is specified, and "broadcast" in the TxOptions field is not enabled. The

remainder of the data service messaging can proceed as specified in section 3.1.1 of the RF4CE specification.

The wireless device 325 can be paired with similar devices as well as adjunct device 100, 100', 101, 103 or 330 as set forth in the RF4CE standard. Two such wireless devices 325 can implement a pairing procedure that includes, for instance, pressing and holding down the pushbuttons 324 or some other button, such as a small recessed button of both devices for at least four seconds. When they are paired with each other, they will both chirp twice via sound emitter 322 and the LED 326 will stop flashing. Pairing can be cleared by pressing and holding the pushbutton for 8 seconds. Clearing can be acknowledged by a single chirp via sound emitter 322 and the flashing of LED 326. Other compatible devices can be configured for pairing or cleared in a similar fashion, however, the user interface of handheld wireless communication device 110 can optionally be used to assist the pairing process.

In operation, when the pushbutton on one unit is depressed, all the other units in the same paging network can emit a loud alarm via audio emitter 322, flash a light such as LED 326, etc. In one example of operation, a user may purchase a wireless device 325 that he puts on his key ring and one in his wallet. If the user misplaces his wallet but has his keys in his pocket, he simply pages his wallet using the key ring wireless device 325, or vice versa. A very forgetful person may buy one more wireless device 325, so he had two for the keys and the wallet and one more stuck on the wall next his bed. If both the keys and wallet are lost he pushes the wireless device 325 next to his bed and the buzzer sounds on both items.

In a further example, a mother of five children in a supermarket may put one wireless device 325 in the pocket of each child to retrieve them should they wander off. Wireless device 325 can be programmed to send signals such as periodic beacons or polling signals to determine if all other wireless devices 325 are present in the network. In this fashion, a wireless devices 325 can be programmed to sound an alarm if a child wonders outside of a certain range, based on lack of a response to a poll, low signal power, etc. As previously discussed, the adjunct device 330 can operate as a wireless device 325 in any of the examples discussed above.

As discussed in conjunction with FIGs. 20-23, wireless device 325 can respond to wireless commands from an adjunct device 330, to relay infrared commands to other wireless device 325 of other devices to be controlled. So, a user can tape a tag on the inside door of a home entertainment system and control that system from places that are not possible with standard infrared remotes. The system can be used to control multiple TVs or entertainment centers within the same home or across multiple sites based on a user selected group of devices and/or selected tasks including complex tasks based on, for example, GPS position information, time of day, compass direction, distance and other parameters.

As discussed in conjunction with FIGs. 24-27, a user can replace their existing garage door opener button with a wireless device 325 and control their garage door from their handheld wireless communication device via an adjunct device 330. Since many smartphones have GPS, this would allow intelligent handheld wireless communication device applications such as automatically opening the garage door as the user drives up. Home lighting can be similarly controlled, where the lights in the house automatically turn off if there is no wireless device 325 or adjunct 330 present in the home.

As previously discussed a wireless device 325 will be able to function as both a pager and IR relay device at the same time. The network topology for IR Relay devices is slightly different, however. Where the paging function was performed among peers, IR relay can operate based on a master-slave relationship between the adjunct device 330 and the wireless device 325. Multiple adjunct devices 330 can control a single wireless device 325 and one adjunct device 330 can control many wireless devices 325.

In an example of operation, three wireless devices 325 are set up in various places for IR relay, one in front of the TV, one inside a cabinet in front of the DVD and VCR, and a third on the other side of the room where the CD player sits. Each has its own network for IR relay. Both Mom's iPhone and the teenager's iPhone (via corresponding adjunct devices 330) can control all three devices. The adjunct devices 330 can initiate data delivery.

To save power, wireless devices 325 may only be awake a small percentage of the time during in a standby mode of operation. For example, a wireless device 325 may typically be awake to transmit and receive a small amount of time every two or more seconds while waiting for a command. The wireless devices 325 can switch itself to an active state when a command or other signaling is received from another device. For instance, following the example discussed above, the adjunct device 330 can send to the target wireless devices 325 the RX-ENABLE.request signal for a reasonable active period such as 5 seconds, to wake up the device and keep it awake for a period of time. After that, the adjunct device 330 can transmit codes such as commands and other control data.

FIG. 37 presents a flowchart representation of a method in accordance with an embodiment of the present invention. In particular, a method is presented for use in conjunction with one or more functions and features described in FIGs. 1-36. In step 400, data is generated to present for display on a handheld wireless communication device a graphical user interface that receives an indication of a user to locate at least one personal object and that generates a location signal in response thereto. In step 402, the location signal is communicated to an adjunct device via the communication port of the handheld wireless communication device to cause the adjunct device to transmit an RF paging signal to at least one remote wireless device via a short-range wireless transceiver of the adjunct device.

In an embodiment of the present invention, the at least one personal object includes a plurality of personal objects and the at least one remote wireless device includes a plurality of remote wireless devices. The graphical user interface can include a menu that indicates the plurality of personal objects. The indication of the user to locate the at least one personal object can include a selected one of the plurality of personal objects. The location signals can indicate a corresponding one of the plurality of remote wireless devices.

The method can also include a pairing procedure for pairing the adjunct device with the plurality of remote wireless devices. The pairing procedure can generate a list that identifies the plurality of remote devices and the plurality of personal objects. The menu that indicates the plurality of personal objects can be generated based on the list.

In an embodiment of the present invention the remote device can generate a location signal in response to the paging signal. The adjunct device can include a directional antenna, coupled to the short-range wireless receiver. The short-range wireless receiver of the adjunct device can generate a signal strength in response to the location signal. The homing application can further include receiving the signal strength via the communication port and the graphical user interface can further generate a signal strength indication to the user. The directional antenna can have a reception pattern that includes a null.

In an embodiment of the present invention, a time of flight can be used instead of or in addition to signal strength to determine the distance to a remote device. In particular, the time can be measured from the transmission of the paging signal to the reception of the location signal. This time delay (round trip flight time) can indicate the distance to the remote device. The time delay, T_d, can be represented as follows:

$$T_d = T_{f1} + T_{f2} + T_p$$

where, T_p represents the processing time to generate the location signal in response to the paging signal and to recognize the location signal, T_{f1} represents the flight time for the paging signal to travel to the remote device and T_{f2} represents the flight time for the location signal to travel from the remote device to the adjunct device. Considering the processing time T_p to be fixed, the distance to a remote device, D_{ft}, can be approximated based on the following:

$$D_{ft} = c(T_f) = c(T_d - T_p)$$

where is c is a proportionality constant that is based on the speed of light in air and $T_f = (T_{f1} + T_{f2})$.

It should be noted that signal strength and flight time and both be considered in estimating the distance to a remote device. Consider for example, a distance measurement can be expressed as a function *f* of signal strength, D_{ss}, as follows:

$$D_{ss} = f(\text{RSSI})$$

where RSSI is a received signal strength indication. A final distance measurement D can be determined based on either:

$$D = g(D_{ft}, D_{ss}) \text{ or}$$

$$D = h(T_f, \text{RSSI})$$

where g and h are either linear or nonlinear functions. For example, distance can be calculated both ways and averaged to determine a more refined measurement. In a further example, the difference between the two measurements can be used to determine a relative accuracy of the distance estimate.

It should be noted that he functions g or h can be generated to determine distance differently under different conditions. For example, for longer distances determined for instance by either a value of T_f that is above a high flight time threshold and/or a RSSI below a low signal strength threshold, the distance D can be estimated either exclusively based on either T_f or D_{ft} or by predominately weighting the values of T_f or D_{ft} in combination with D_{ft} or RSSI. Further, for midrange distances determined for instance by either a value of T_f that is below a high flight time threshold, but above a low flight time threshold and/or a RSSI above a low signal strength threshold and below a high signal strength threshold, the distance D can be estimated based on a more equal weighting of the values of T_f or D_{ft} in combination with D_{ft} or RSSI. In addition, for shorter distances determined for instance by either a value of T_f that is below a low flight time threshold and/or a RSSI above a high signal strength threshold, the distance D can be estimated either exclusively based on either D_{ft} or RSSI or by predominately weighting the values of D_{ft} or RSSI in combination with T_f or D_{ft}. In this fashion, greater importance can be attributed to high values of RSSI and/or T_f.

FIG. 38 presents a flowchart representation of a method in accordance with an embodiment of the present invention. In particular, a method is presented for use in conjunction with one or

more functions and features described in FIGs. 1-37. In step 410, data is generated to present for display on the handheld wireless communication device a graphical user interface that receives an indication of a user to control at least one home device and that generates a control signal in response thereto. In step 412, the control signal is communicated to an adjunct device via the communication port of a handheld wireless communication device to cause the adjunct device to transmit a wireless signal to at least one wireless interface via a short-range wireless transmitter of the adjunct device.

In an embodiment of the present invention, the home devices can include a plurality of home devices, each of the plurality of home devices having a wireless interface. The graphical user interface can include a menu that indicates the plurality of home devices and the indication of the user to control the home device can include a selected one of the plurality of home device. The control signal can indicate a corresponding one of the plurality of home devices.

In an embodiment of the present invention, the remote control application further includes a pairing procedure for pairing the adjunct device with the plurality of home devices. The pairing procedure can generate a list that identifies the plurality of home devices and the menu that indicates the plurality of home devices can be generated, based on the list. Home devices can include a home automation device or a home media device. The short-range wireless transmitter can include an infrared transmitter.

FIG. 39 presents a flowchart representation of a method in accordance with an embodiment of the present invention. In particular, a method is presented for use in conjunction with one or more functions and features described in FIGs. 1-38. In step 420, a 911 signal generated by an adjunct device is received via a communication port of the handheld wireless communication device. In step 422, a 911 call is initiated via the wireless telephony transceiver in response to the 911 signal. As discussed in conjunction with FIG. 28, the emergency call can include location information, such as GPS coordinates or other position information that is relayed to a monitoring service, or a 911 call center to facilitate the location of the handheld wireless communication device 110 that initiated the emergency call.

FIG. 40 presents a flowchart representation of a method in accordance with an embodiment of the present invention. In particular, a method is presented for use in conjunction with one or more functions and features described in FIGs. 1-39. In step 430, a plurality of paging devices are paired to form a paging network, the plurality of paging devices including a plurality of fixed paging devices and the mobile paging device. In step 432, a paging signal is transmitted to the plurality of paging devices via a short-range wireless transmitter. In step 434, location information is received via a short-range wireless receiver pertaining to the mobile paging device from at least one of the plurality of fixed paging devices. In step 436, a location of the mobile paging device is determined based on the location information.

In an embodiment of the present invention, the location information includes directional and distance information between the at least one of the plurality of fixed devices to the at least one mobile device and wherein determining the location of the at least one mobile device includes a triangulation of the directional information. The method can further include receiving a location signal, at the at least one of the plurality of fixed paging devices; scanning a programmable antenna in the at least one of the plurality of fixed paging devices to determine signal strengths corresponding to a plurality of null directions; determining a lowest of the signal strengths; and determining the directional information based on the one of the plurality of null directions corresponding to the lowest of the signal strengths. In this method, the paging signal can be transmitted via a handheld wireless communication device or via an adjunct device coupled to a handheld wireless communication device or other device.

In an embodiment of the present invention, the location information includes signal strength information and step 436 includes: determining the at least one of the plurality of fixed devices having the greatest signal strength; and determining a proximity to the at least one of the plurality of fixed devices having the greatest signal strength.

As previously discussed, distance can be determined based on a time of flight methodology that looks to round trip signal delay to determine a measure of distance to a remote device.

While the description above has set forth several different modes of operation, the devices described here may simultaneously be in two or more of these modes, unless, by their nature, these modes necessarily cannot be implemented simultaneously. While the foregoing description includes the description of many different embodiments and implementations, the functions and features of these implementations and embodiments can be combined in additional embodiments of the present invention not expressly disclosed by any single implementation or embodiment, yet nevertheless understood by one skilled in the art when presented this disclosure.

As one of ordinary skill in the art will appreciate, the term "substantially" or "approximately", as may be used herein, provides an industry-accepted tolerance to its corresponding term and/or relativity between items. Such an industry-accepted tolerance ranges from less than one percent to twenty percent and corresponds to, but is not limited to, component values, integrated circuit process variations, temperature variations, rise and fall times, and/or thermal noise. Such relativity between items ranges from a difference of a few percent to magnitude differences. As one of ordinary skill in the art will further appreciate, the term "coupled", as may be used herein, includes direct coupling and indirect coupling via another component, element, circuit, or module where, for indirect coupling, the intervening component, element, circuit, or module does not modify the information of a signal but may adjust its current level, voltage level, and/or power level. As one of ordinary skill in the art will also appreciate, inferred coupling (i.e., where one element is coupled to another element by inference) includes direct and indirect coupling between two elements in the same manner as "coupled". As one of ordinary skill in the art will further appreciate, the term "compares favorably", as may be used herein, indicates that a comparison between two or more elements, items, signals, etc., provides a desired relationship. For example, when the desired relationship is that signal 1 has a greater magnitude than signal 2, a favorable comparison may be achieved when the magnitude of signal 1 is greater than that of signal 2 or when the magnitude of signal 2 is less than that of signal 1.

In preferred embodiments, the various circuit components are implemented using 0.35 micron or smaller CMOS technology and can include one or more system on a chip integrated circuits that implement any combination of the devices, modules, submodules and other functional components presented herein. Provided however that other circuit technologies including other

transistor, diode and resistive logic, both integrated or non-integrated, may be used within the broad scope of the present invention. Likewise, various embodiments described herein can also be implemented as software programs running on a computer processor. It should also be noted that the software implementations of the present invention can be stored on a tangible storage medium such as a magnetic or optical disk, read-only memory or random access memory and also be produced as an article of manufacture.

Thus, there has been described herein an apparatus and method, as well as several embodiments including a preferred embodiment. Various embodiments of the present invention herein-described have features that distinguish the present invention from the prior art.

It will be apparent to those skilled in the art that the disclosed invention may be modified in numerous ways and may assume many embodiments other than the preferred forms specifically set out and described above. Accordingly, it is intended by the appended claims to cover all modifications of the invention which fall within the true spirit and scope of the invention.

CLAIMS

What is claimed is:

1. A mobile communication device comprising:

a plurality of wireless transceivers including a Bluetooth transceiver, a long-range transceiver configured to send and receive telephone calls via a telephony network and to communicate Internet data, and one or more ultra-wideband transceivers coupled to two or more antennas;

a memory that stores operational instructions;

a touch screen; and

a processor coupled to the plurality of wireless transceivers, the memory, and the touch screen, wherein the processor is configured to execute the operational instructions, which upon execution, cause the processor to:

present a graphical user interface via the touch screen;

in response to a pair request from a user received at the graphical user interface, pair the mobile communication device with at least one remote device;

in response to an audio alert request from the user received at the graphical user interface, transmit an audio alert request signal to the at least one remote device via the Bluetooth transceiver;

estimate a distance between the mobile communication device and the at least one remote device based on ultra-wideband communication between the one or more ultra-wideband transceivers and the at least one remote device and time of flight calculations;

determine a direction to the at least one remote device based on signal delay of ultra-wideband communications between the two or more antennas and the at least one remote device; and

output to the graphical user interface the estimated distance to the at least one remote device and an arrow pointing in the direction of the at least one remote device.

2. The mobile communication device of claim 1, wherein the operational instructions, upon execution, further cause the processor to output to the touch screen an estimated position of the at least one remote device based on information received at one of the plurality of wireless transceivers via a wireless network.

3. The mobile communication device of claim 2, wherein, the operational instructions, upon execution, further cause the processor to output on the touch screen the estimated position of the at least one remote device based on information received from a second mobile communication device.

4. The mobile communication device of claim 3, wherein the second mobile communication device is paired with the at least one remote device.

5. The mobile communication device of claim 3, wherein the second mobile communication device is not paired with the at least one remote device.

6. The mobile communication device of claim 3, wherein the operational instructions, upon execution, further cause the processor to transmit an audio alert request signal to the at least one remote device via the wireless network.

7. The mobile communication device of claim 6, wherein the at least one remote device includes a plurality of remote devices and wherein the operational instructions further cause the processor to (i) output to the touch screen a representation of the plurality of remote devices, (ii) receive user input from the touch screen selecting one of the plurality of remote devices, and (iii)

output to the touch screen the estimated distance to the selected one of the plurality of remote devices and the direction to the selected one of the plurality of remote devices.

8. The mobile communication device of claim 7, wherein the operational instructions, upon execution, further cause the processor to receive input from the touch screen defining names for one or more of the plurality of remote devices.

9. The mobile communication device of claim 7, additionally comprising an orientation sensor coupled to the processor and wherein the operational instructions further cause the processor to determine a direction to one or more of the plurality of remote devices based on a manual rotation of the mobile communication device.

10. The mobile communication device of claim 9, wherein the operational instructions, upon execution, further cause the processor to determine a direction to one or more of the plurality of remote devices based on a strength of a signal received from the one or more of the plurality of remote devices at one or more of the plurality of wireless transceivers.

11. A mobile communication device comprising:

a plurality of wireless transceivers including a Bluetooth transceiver, a long-range transceiver configured to send and receive telephone calls via a telephony network and to communicate Internet data, and one or more ultra-wideband transceivers coupled to two or more antennas;

a memory that stores operational instructions;

a touch screen;

an orientation sensor to detect rotation of the mobile communication device; and

a processor coupled to the plurality of wireless transceivers, the memory, the touch screen and the orientation sensor, wherein the processor is configured to execute the operational instructions, which upon execution, cause the processor to:

present a graphical user interface via the touch screen;

in response to a pair request from a user received at the graphical user interface, pair the mobile communication device with at least one remote device;

in response to an audio alert request from the user received at the graphical user interface, transmit an audio alert request signal to the at least one remote device via the Bluetooth transceiver;

estimate a distance between the mobile communication device and the at least one remote device based on ultra-wideband communication between the one or more ultra-wideband transceivers and the at least one remote device and time of flight calculations;

determine a direction to the at least one remote device based on signal delay of ultra-wideband communications between the two or more antennas and the at least one remote device and on rotation of the mobile communication device detected by the orientation sensor; and

output to the graphical user interface the estimated distance to the at least one remote device and an arrow pointing in the direction of the at least one remote device.

12. The mobile communication device of claim 11, wherein the at least one remote device includes a plurality of remote devices and wherein the operational instructions further cause the processor to (i) output to the touch screen a representation of the plurality of remote devices, (ii) receive user input from the touch screen selecting one of the plurality of remote devices, and (iii) output to the touch screen the estimated distance to the selected one of the plurality of remote devices and the direction to the selected one of the plurality of remote devices.

13. The mobile communication device of claim 12, wherein the operational instructions, upon execution, further cause the processor to receive input from the touch screen defining names for one or more of the plurality of remote devices.

14. The mobile communication device of claim 13, wherein the operational instructions, upon execution, further cause the processor to determine the direction to one or more of the plurality of remote devices based on a strength of a signal received from the one or more of the plurality of remote devices at one or more of the plurality of wireless transceivers.

15. The mobile communication device of claim 14, wherein the operational instructions, upon execution, further cause the processor to output to the touch screen an estimated position of the one or more of the plurality of remote devices based on information received at one of the plurality of wireless transceivers from a wireless network.

16. The mobile communication device of claim 15, wherein the operational instructions, upon execution, further cause the processor to output on the touch screen an estimated position of the one or more of the plurality of remote devices based on information received from a second mobile communication device.

17. The mobile communication device of claim 16, wherein the second mobile communication device is paired with the at least one remote device.

18. The mobile communication device of claim 16, wherein the second mobile communication device is not paired with the at least one remote device.

19. The mobile communication device of claim 16, wherein the operational instructions, upon execution, further cause the processor to transmit an audio alert request signal to the at least one remote device via the wireless network.

20. A mobile communication device comprising:

a plurality of wireless transceivers including a Bluetooth transceiver, a long-range transceiver configured to send and receive telephone calls via a telephony network and to communicate Internet data and one or more ultra-wideband transceivers coupled to two or more antennas;

a memory that stores operational instructions;

a touch screen; and

a processor coupled to the memory and to the touch screen, wherein the processor is configured to execute the operational instructions, which upon execution, cause the processor to:

present a graphical user interface via the touch screen;

generate pairing signals in response to indications from a user via the graphical user interface to pair the mobile communication device to each of a plurality of remote devices, wherein the Bluetooth transceiver responds to the pairing signals by communicating RF signals to pair the mobile communication device to each of the plurality of remote devices, wherein a unique device identifier associated with each of the plurality of remote devices is shared with the mobile communication device during pairing;

display, via the graphical user interface, a name associated with each of the plurality of remote devices;

receive a selection of a selected remote device of the plurality of remote devices in response to selection, via the graphical user interface, of the name associated with the selected remote device, wherein the graphical user interface visually indicates the selection of the selected remote device;

determine whether the selected remote device is in range of the Bluetooth transceiver, wherein the selected remote device is determined to be in range of the Bluetooth transceiver based on reception, via the Bluetooth transceiver, of a beacon from the selected remote device;

generate an audio alert signal in response to a second indication from the user via the graphical user interface, wherein the Bluetooth transceiver transmits a first RF signal to the selected remote device in response to the audio alert signal, wherein the first RF

signal indicates a request to the selected remote device to emit an audio alert to audibly assist the user in determining a location of the selected remote device;

determine an estimated distance to the selected remote device, based on the reception, via the Bluetooth transceiver, of the beacon from the selected remote device; and

present at least one display, via the graphical user interface, wherein the at least one display includes an estimated position of the selected remote device on a map, and wherein the at least one display indicates the estimated distance to the selected remote device.

21. The mobile communication device of claim 20, wherein the estimated position of the selected remote device is determined based on information received at one of the plurality of wireless transceivers via a wireless network.

22. The mobile communication device of claim 21, wherein the information is received from a second mobile communication device.

23. The mobile communication device of claim 22, wherein the information indicates one or more of: position information, signal strength information, proximity information, or coordinate information.

24. The mobile communication device of claim 23, wherein the information is based on GPS coordinates.

25. The mobile communication device of claim 22 wherein the second mobile communication device is paired with the selected remote device.

26. The mobile communication device of claim 22 wherein the second mobile communication device is not paired with the selected remote device.

27. The mobile communication device of claim 20, wherein the estimated distance to the selected remote device is determined based on a strength of the beacon from the selected remote device.

28. The mobile communication device of claim 27, wherein the estimated distance to the selected remote device is determined based on at least three distance ranges.

29. The mobile communication device of claim 28 wherein the at least three distance ranges include a long-range distance, a midrange distance that is less than the long-range distance, and a short-range distance that is less than the midrange distance.

30. A mobile communication device comprising:

a plurality of wireless transceivers including a Bluetooth transceiver, a long-range transceiver configured to send and receive telephone calls via a telephony network and to communicate Internet data and one or more ultra-wideband transceivers coupled to two or more antennas;

a memory that stores operational instructions;

an orientation sensor;

a touch screen; and

a processor coupled to the memory and to the touch screen, wherein the processor is configured to execute the operational instructions, which upon execution, cause the processor to:

present a graphical user interface via the touch screen;

generate pairing signals in response to indications from a user via the graphical user interface to pair the mobile communication device to each of a plurality of remote devices, wherein the Bluetooth transceiver responds to the pairing signals by

communicating RF signals to pair the mobile communication device to each of the plurality of remote devices, wherein a unique device identifier associated with each of the plurality of remote devices is shared with the mobile communication device during pairing;

display, via the graphical user interface, a name of an item associated with each remote device of the plurality of remote devices;

receive a selection of one remote device of the plurality of remote devices in response to selection, via the graphical user interface, of the name of the item associated with the one remote device, wherein the graphical user interface visually indicates the selection of the one remote device;

determine whether the one remote device is in range of the Bluetooth transceiver, wherein the one remote device is determined to be in range of the Bluetooth transceiver based on reception, via the Bluetooth transceiver, of a beacon from the one remote device;

generate an audio alert signal in response to a second indication from the user via the graphical user interface, wherein the Bluetooth transceiver transmits a first RF signal to the one remote device in response to the audio alert signal, wherein the first RF signal indicates a request to the one remote device to emit an audio alert to audibly assist the user in determining a location of the one remote device;

determine an estimated distance to the one remote device, based on ultra-wideband communication between the one or more ultra-wideband transceivers and the one remote device, and based on time of flight calculations, wherein the ultra-wideband communication includes a second RF signal sent to the one remote device via the one or more ultra-wideband transceivers and a third RF signal received from the one remote device via the one or more ultra-wideband transceivers, wherein the third RF signal is a response to the second RF signal, and wherein the time of flight calculations are based on a time difference between sending the second RF signal and receiving the third RF signal;

determine a direction to the one remote device based on instructions to perform a manual rotation of the mobile communication device over different directions, utilizing the orientation sensor and based on signal delays of signals of the ultra-wideband communications, wherein the signals are received at the one or more ultra-wideband transceivers via the two or more antennas; and

present at least one display, via the graphical user interface, wherein the at least one display includes an estimated position of the one remote device on a map, wherein the at least one display indicates the estimated distance to the one remote device, and wherein the at least one display includes an arrow pointing in the direction to the one remote device.

ABSTRACT OF THE DISCLOSURE

A wireless device includes a user interface that generates a pairing signal in response to an indication from a user to pair the wireless device to at least one remote device and generates a first location request signal in response to a second indication from a user to locate the at least one remote device. A short-range wireless transceiver communicates RF signals to pair the wireless device to the at least one remote device and that transmits a first RF paging signal to the at least one remote device in response to the location request signal.

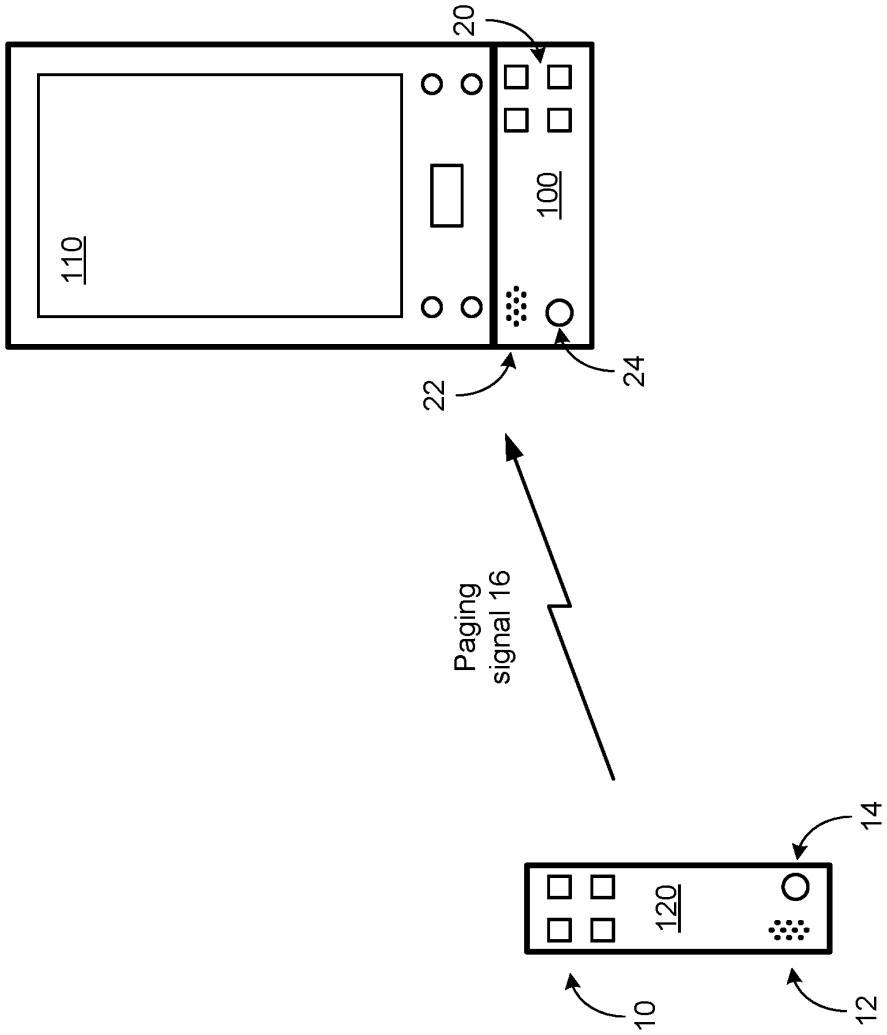

FIG. 1

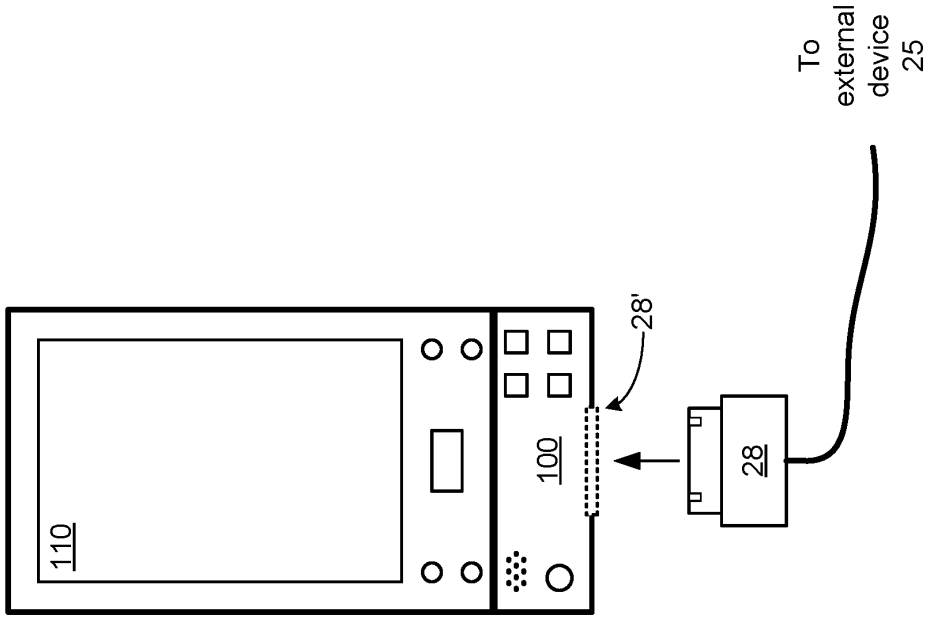

FIG. 3

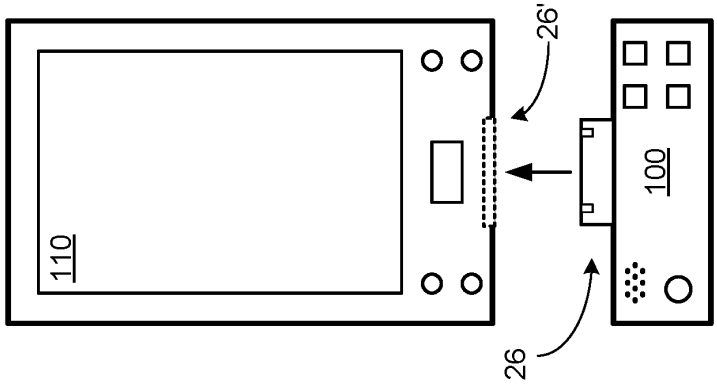

FIG. 2

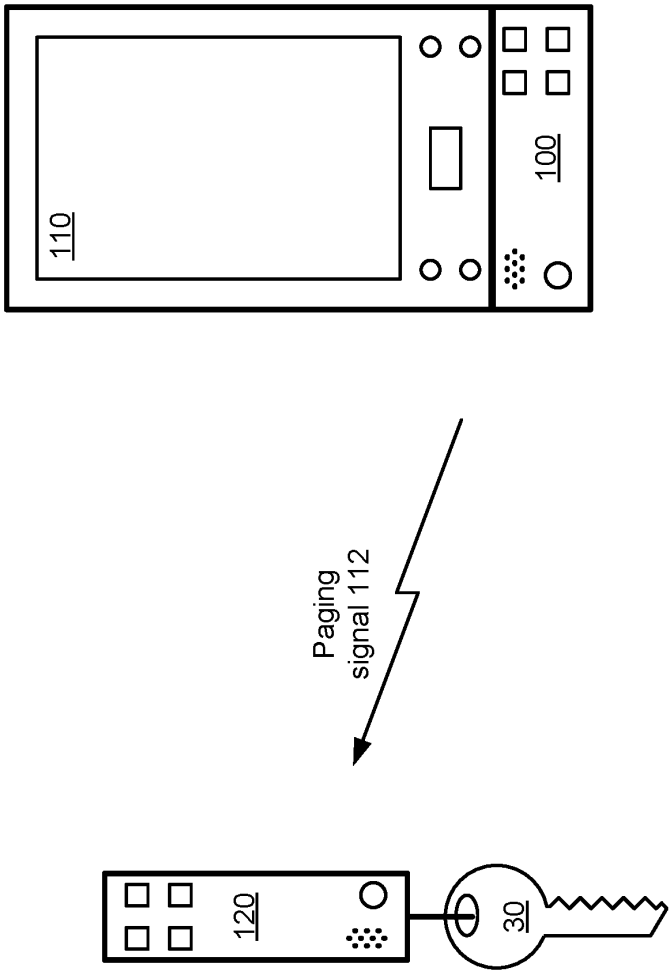

FIG. 4

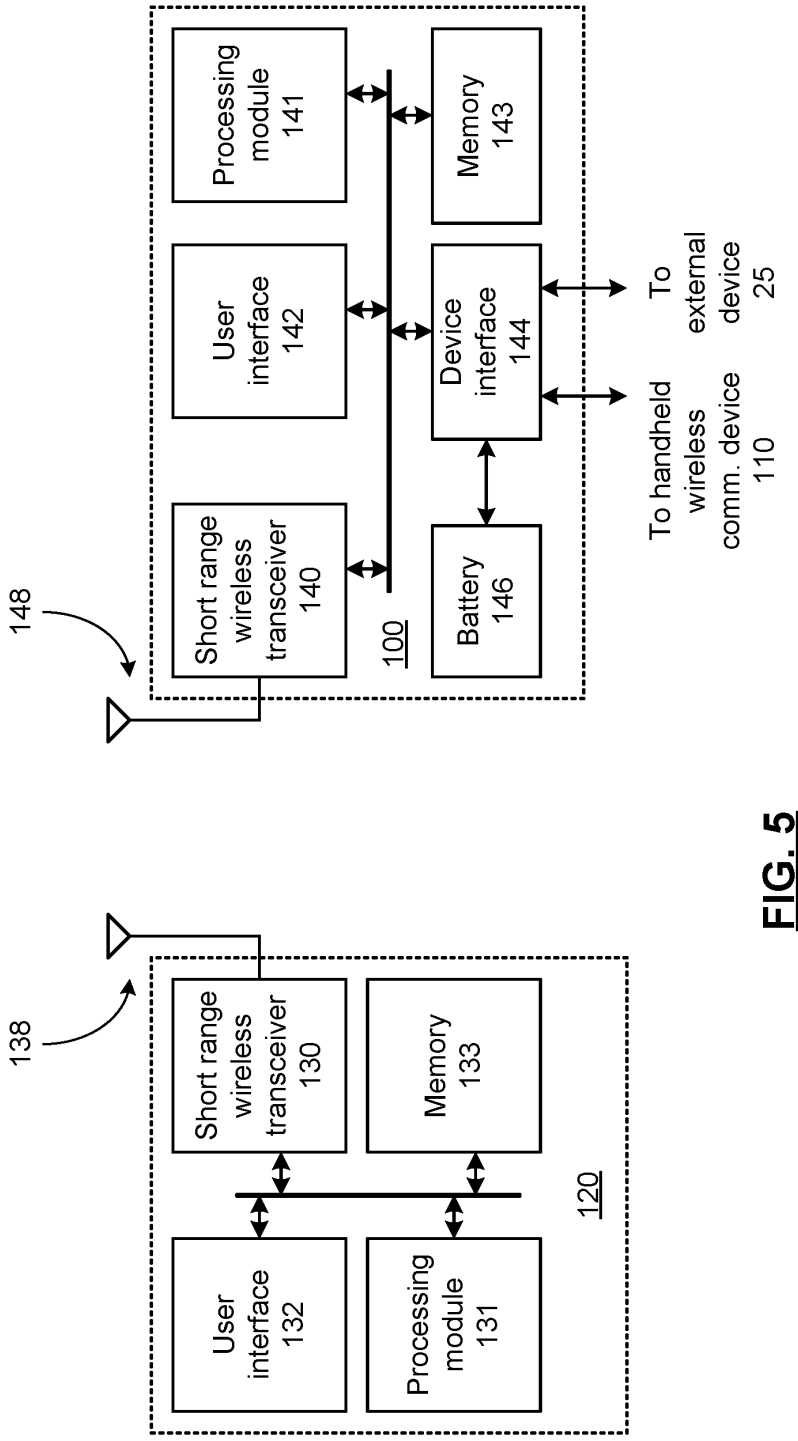
148
Short range wireless transceiver 140
User interface 142
Processing module 141
100
Battery 146
Device interface 144
Memory 143
To handheld wireless comm. device 110
To external device 25
138
Short range wireless transceiver 130
Memory 133
User interface 132
Processing module 131
120

FIG. 5

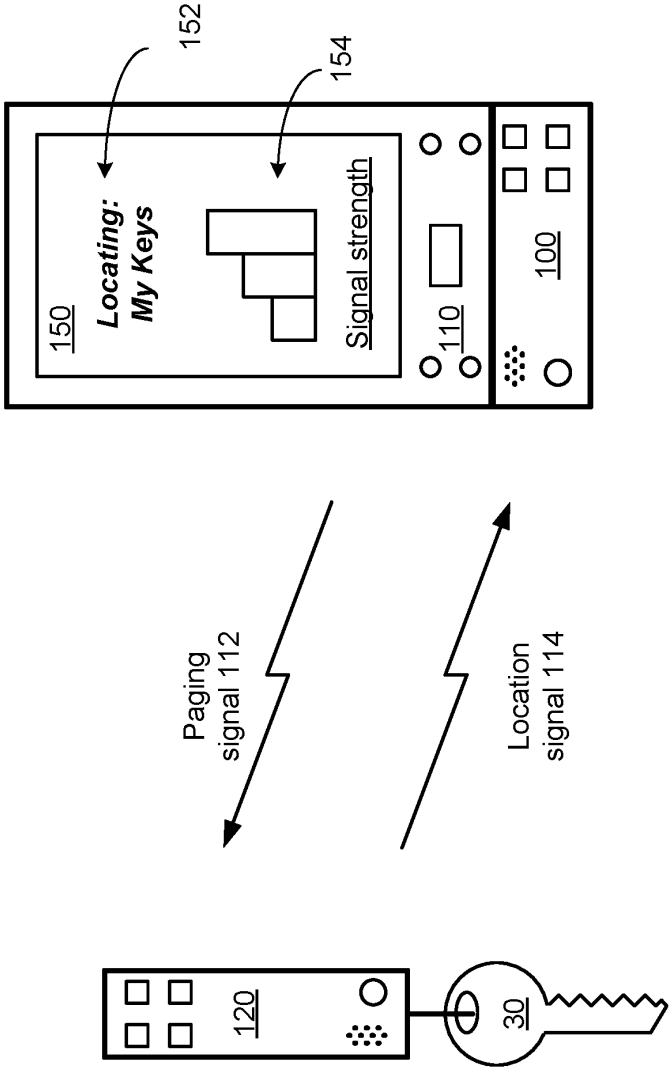
152
154
150
Locating:
My Keys
Signal strength
110
100
Paging
signal 112
Location
signal 114
120
30

FIG. 6

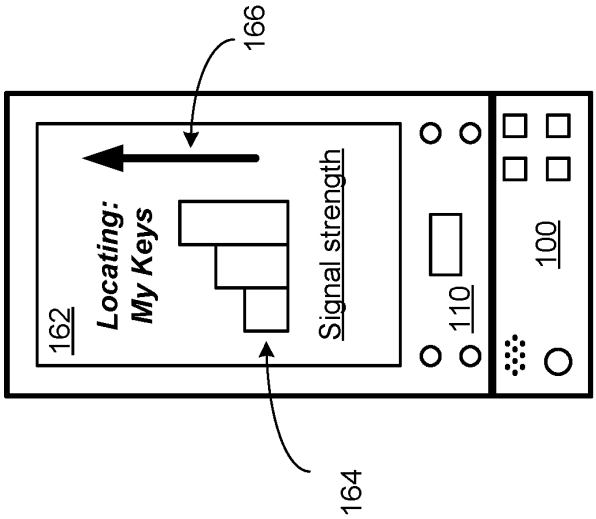

FIG. 8

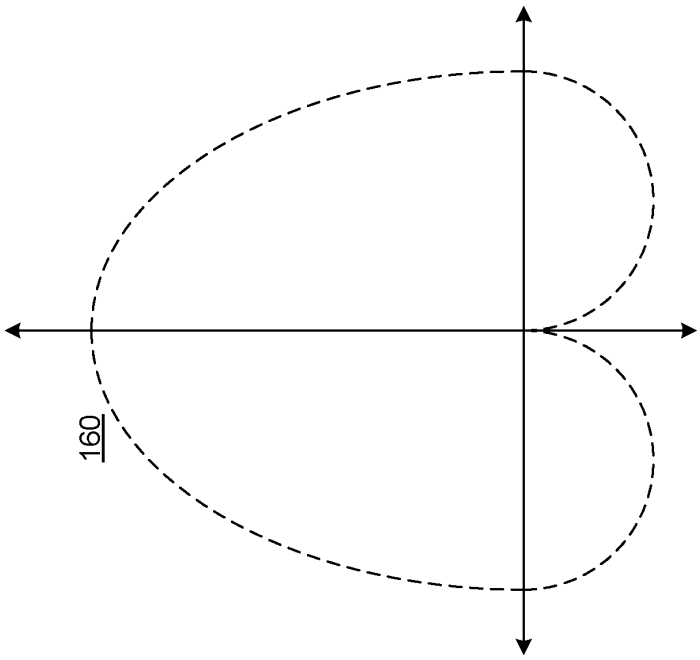

FIG. 7

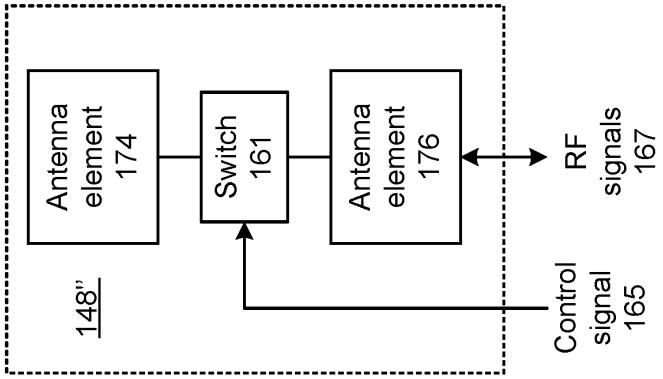

FIG. 11

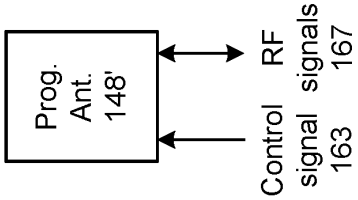

FIG. 10

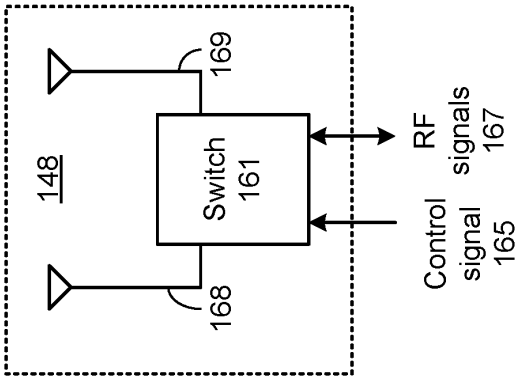

FIG. 9

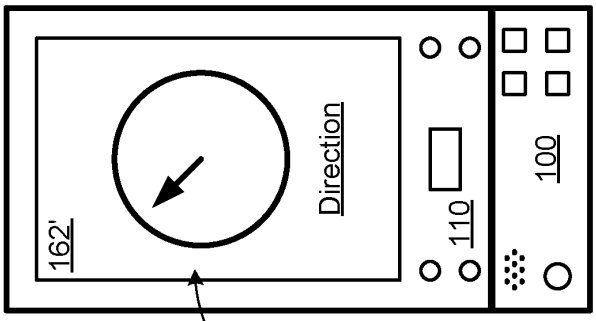

FIG. 15

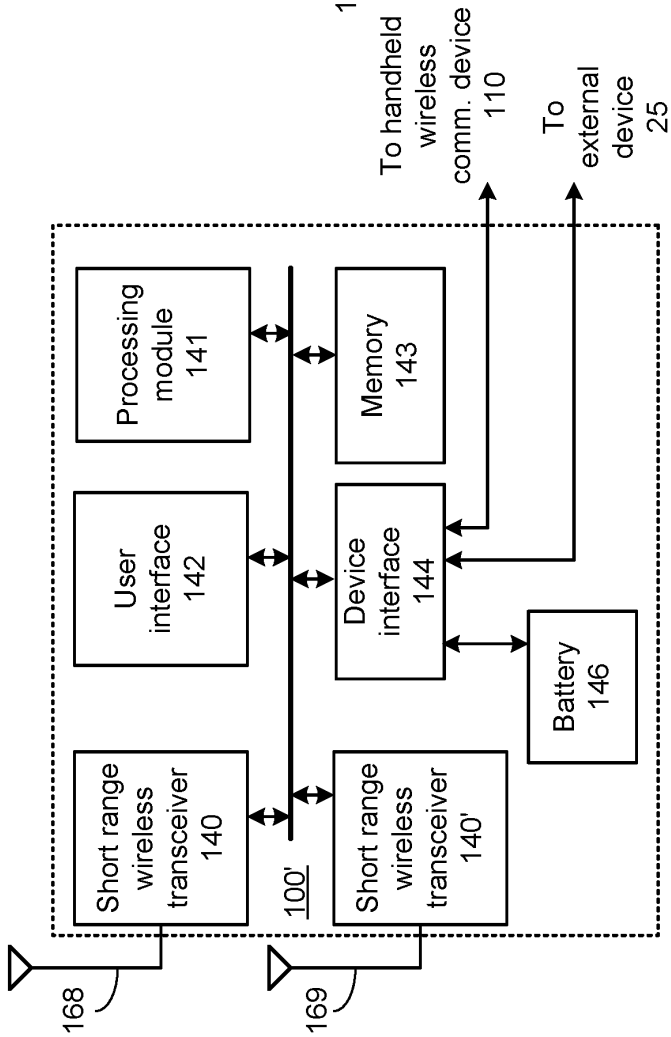

FIG. 13

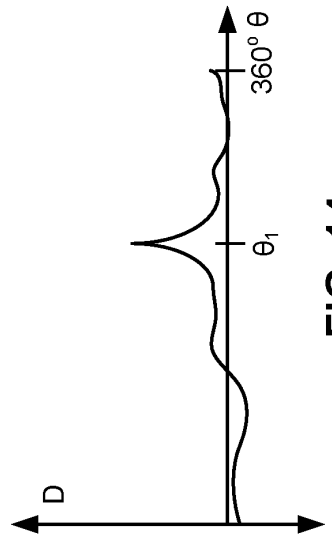

FIG. 14

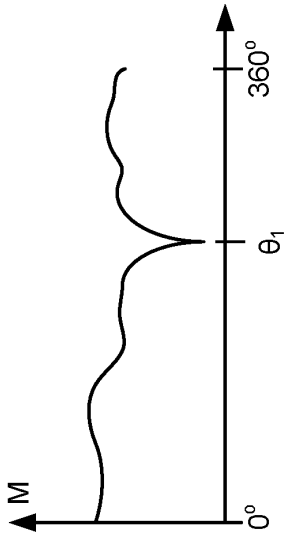

FIG. 12

Device 70
Pairing signals 116
Device 72

FIG. 16

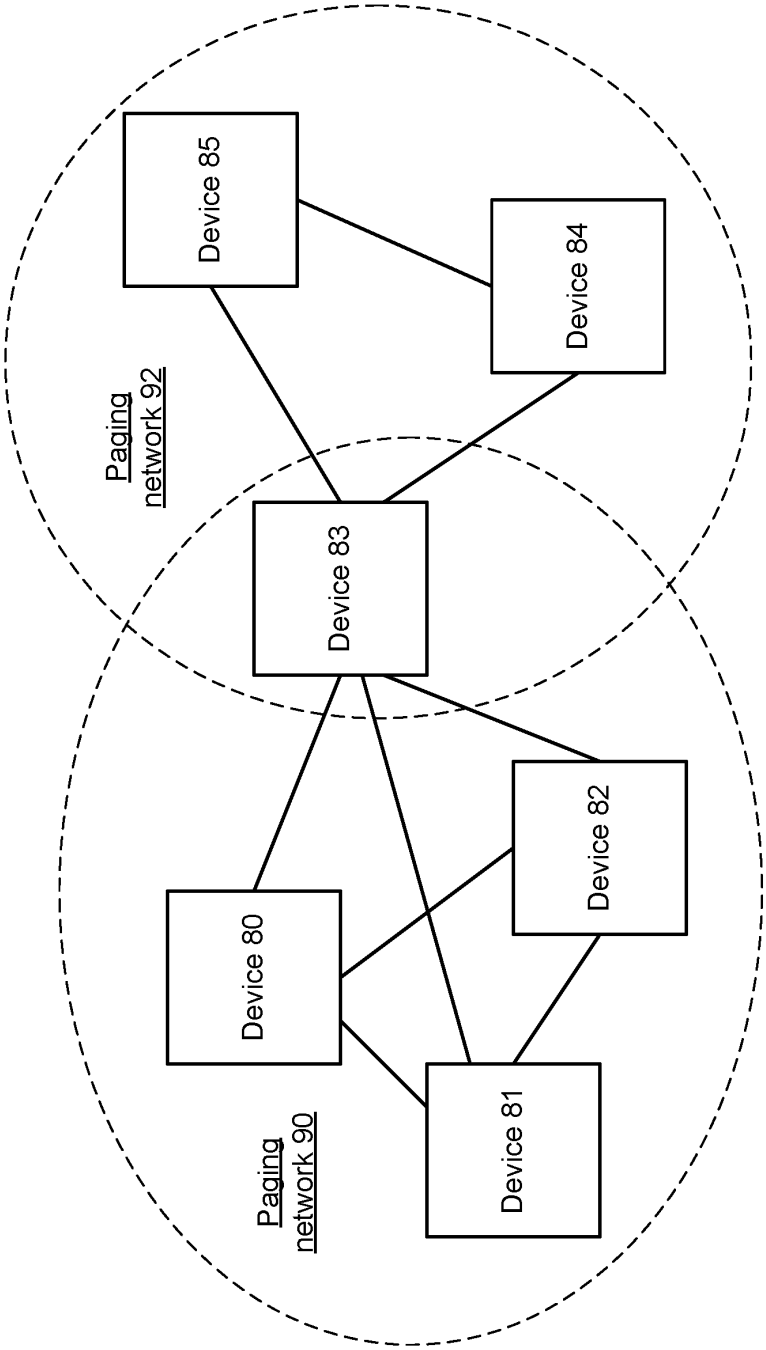
Paging network 92
Device 85
Device 84
Device 83
Paging network 90
Device 80
Device 81
Device 82

FIG. 17

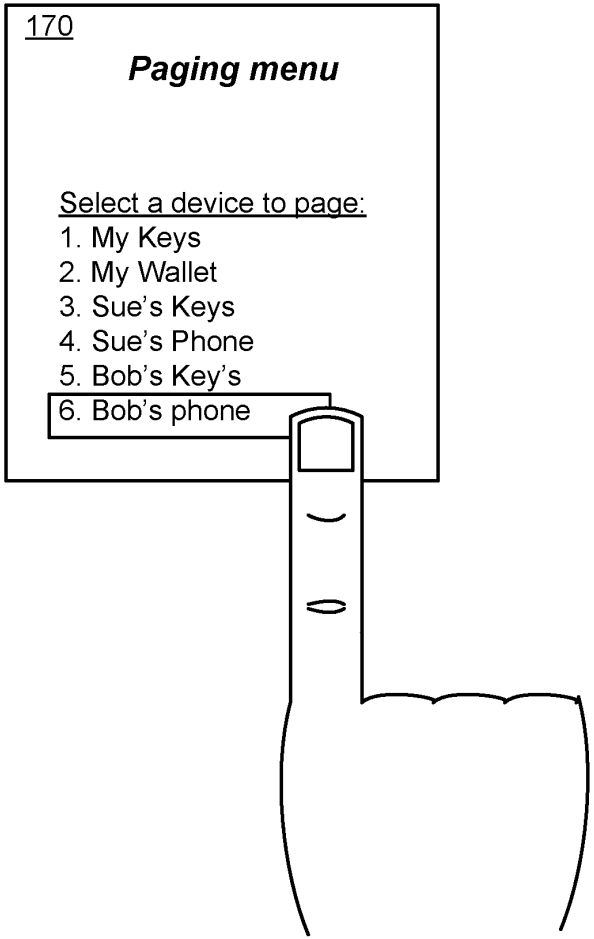
170
Paging menu
Select a device to page:
1. My Keys
2. My Wallet
3. Sue's Keys
4. Sue's Phone
5. Bob's Key's
6. Bob's phone

FIG. 18

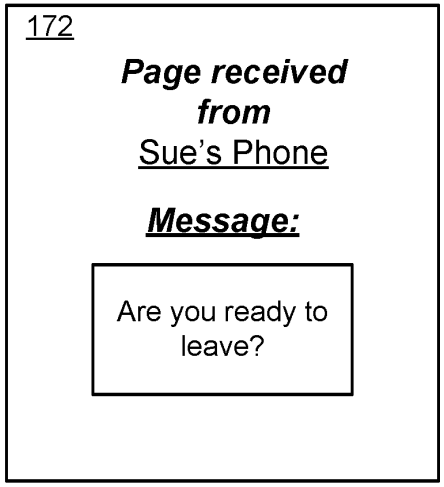
172
Page received from
Sue's Phone
Message:
Are you ready to leave?

FIG. 19

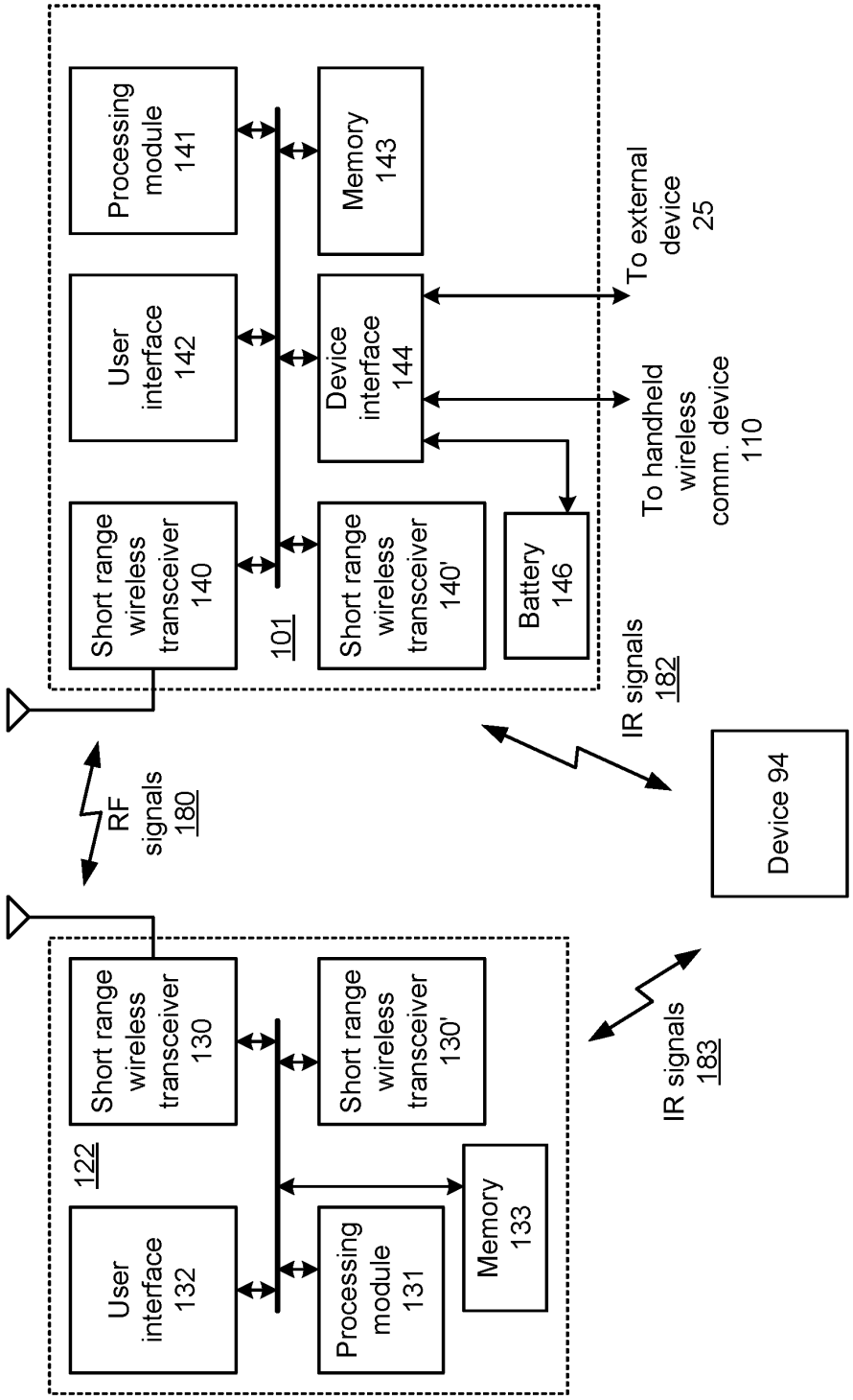
Processing module 141
User interface 142
Short range wireless transceiver 140
Memory 143
Device interface 144
Short range wireless transceiver 140'
Battery 146
101
To external device 25
To handheld wireless comm. device 110
IR signals 182
RF signals 180
Device 94
IR signals 183
122
User interface 132
Short range wireless transceiver 130
Processing module 131
Short range wireless transceiver 130'
Memory 133

FIG. 20

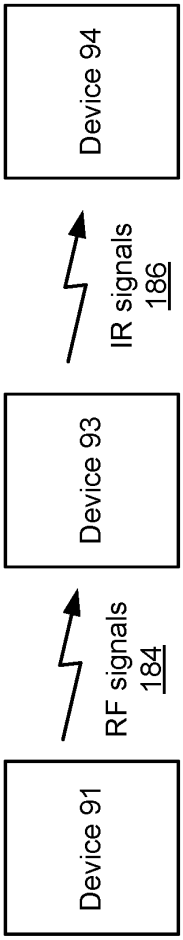

FIG. 21

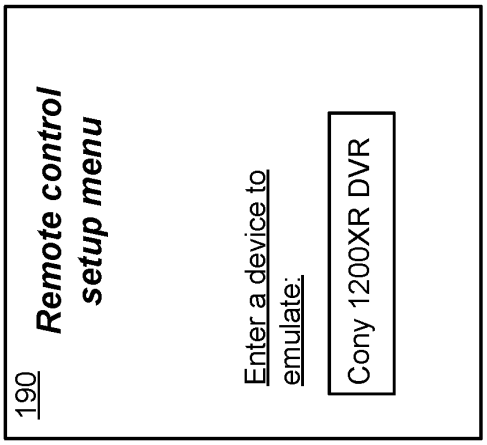

FIG. 22

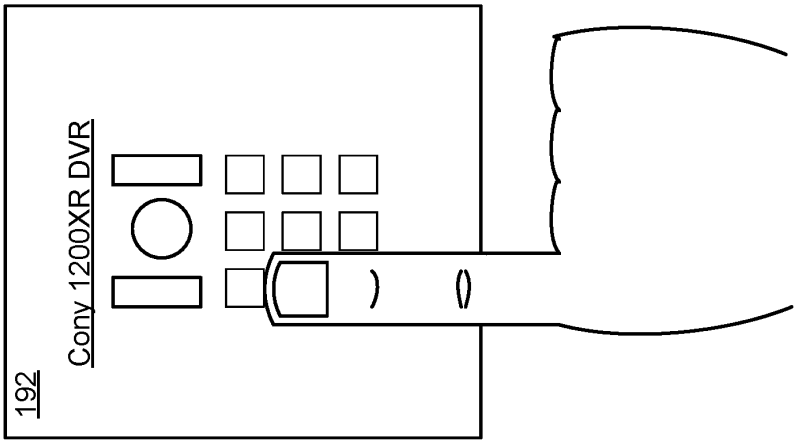

FIG. 23

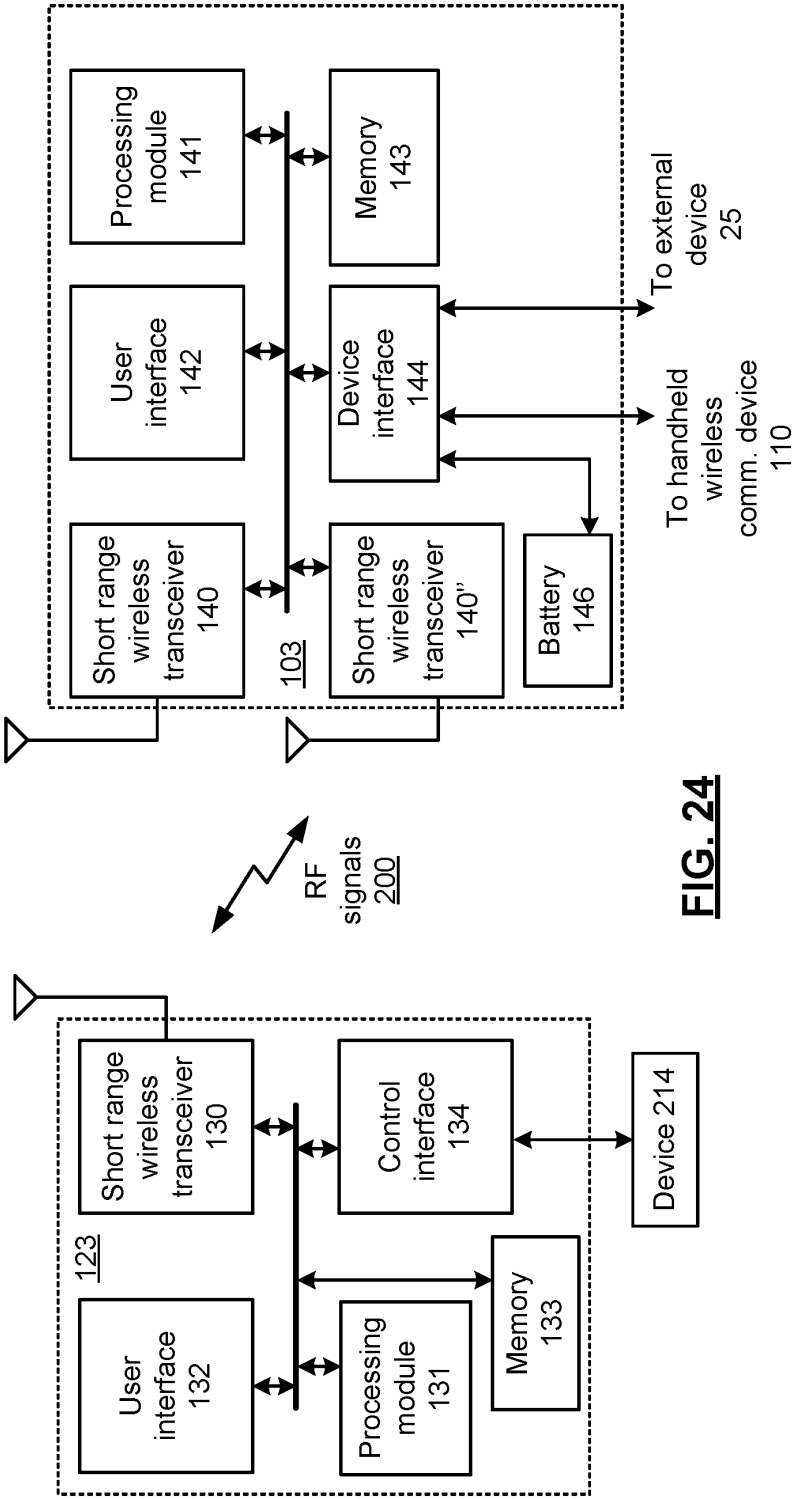
Processing module 141
Memory 143
User interface 142
Device interface 144
Short range wireless transceiver 140
103
Short range wireless transceiver 140"
Battery 146
To external device 25
To handheld wireless comm. device 110
RF signals 200
123
Short range wireless transceiver 130
Control interface 134
Device 214
User interface 132
Processing module 131
Memory 133

FIG. 24

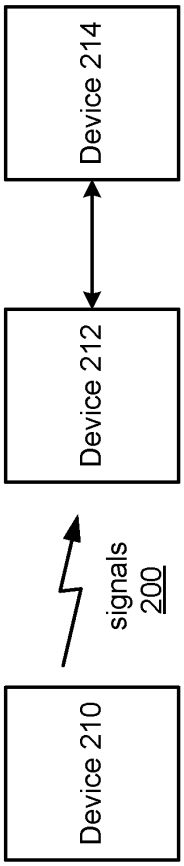
Device 214
Device 212
signals 200
Device 210

FIG. 25

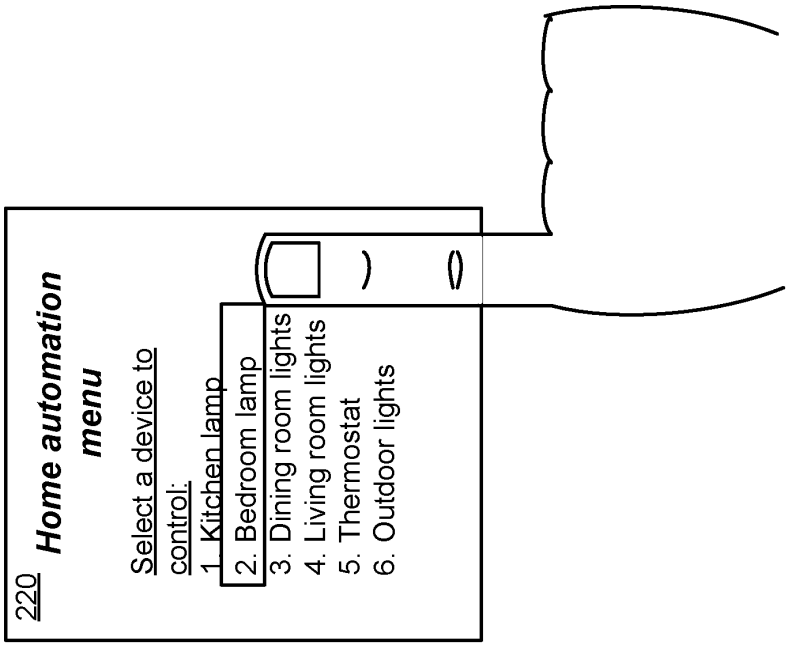
220
Home automation menu
Select a device to control:
1. Kitchen lamp
2. Bedroom lamp
3. Dining room lights
4. Living room lights
5. Thermostat
6. Outdoor lights

FIG. 26

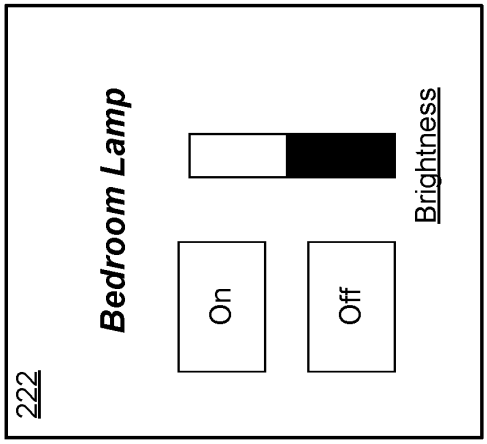
222
Bedroom Lamp
On
Off
Brightness

FIG. 27

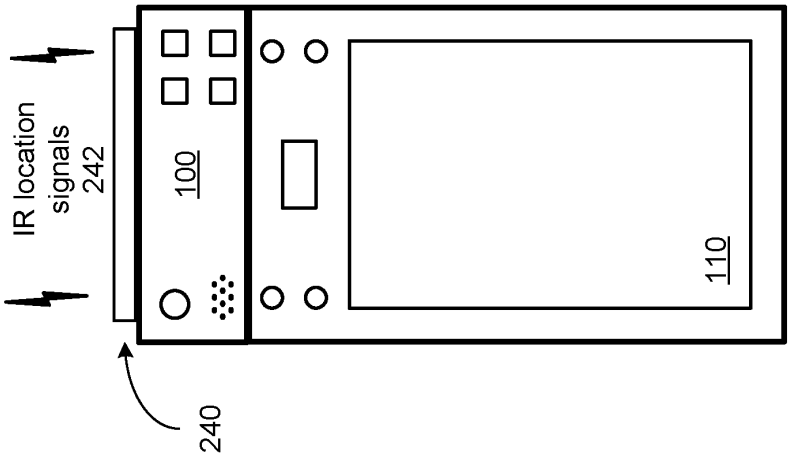
IR location signals 242
100
110
240

FIG. 29

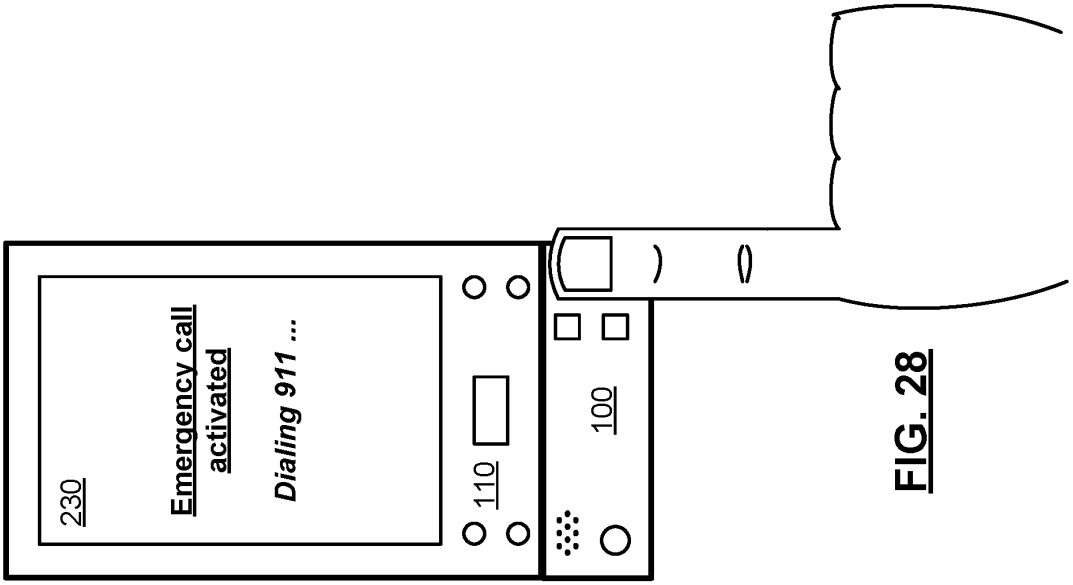
230
Emergency call activated
Dialing 911 ...
110
100

FIG. 28

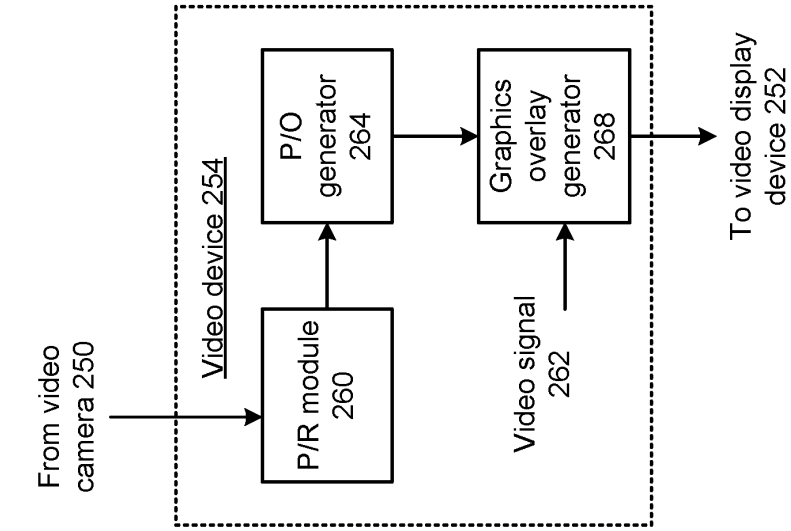
From video camera 250
Video device 254
P/R module 260
P/O generator 264
Video signal 262
Graphics overlay generator 268
To video display device 252

FIG. 31

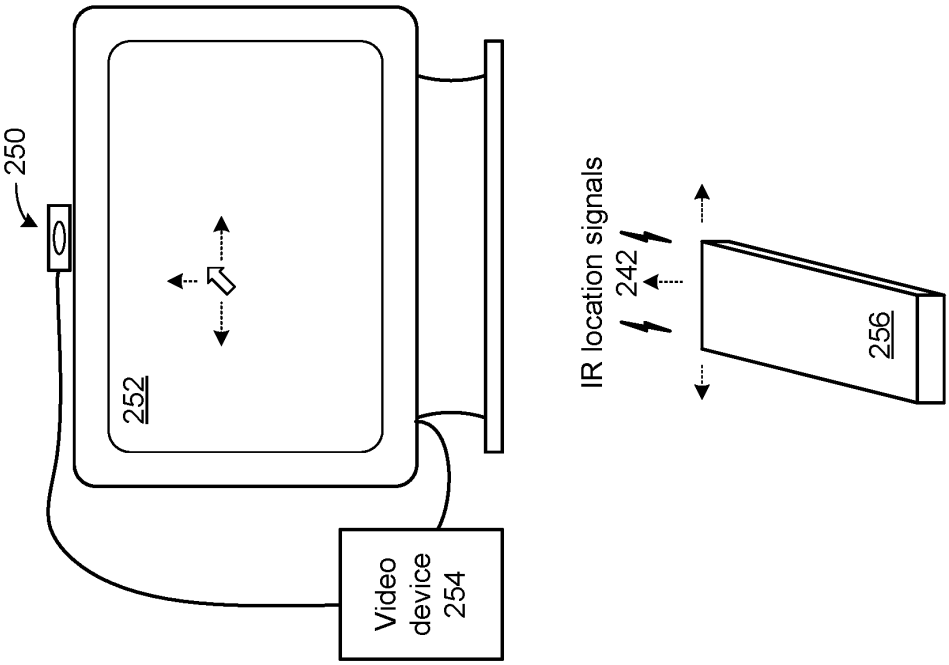
250
252
Video device 254
IR location signals
242
256

FIG. 30

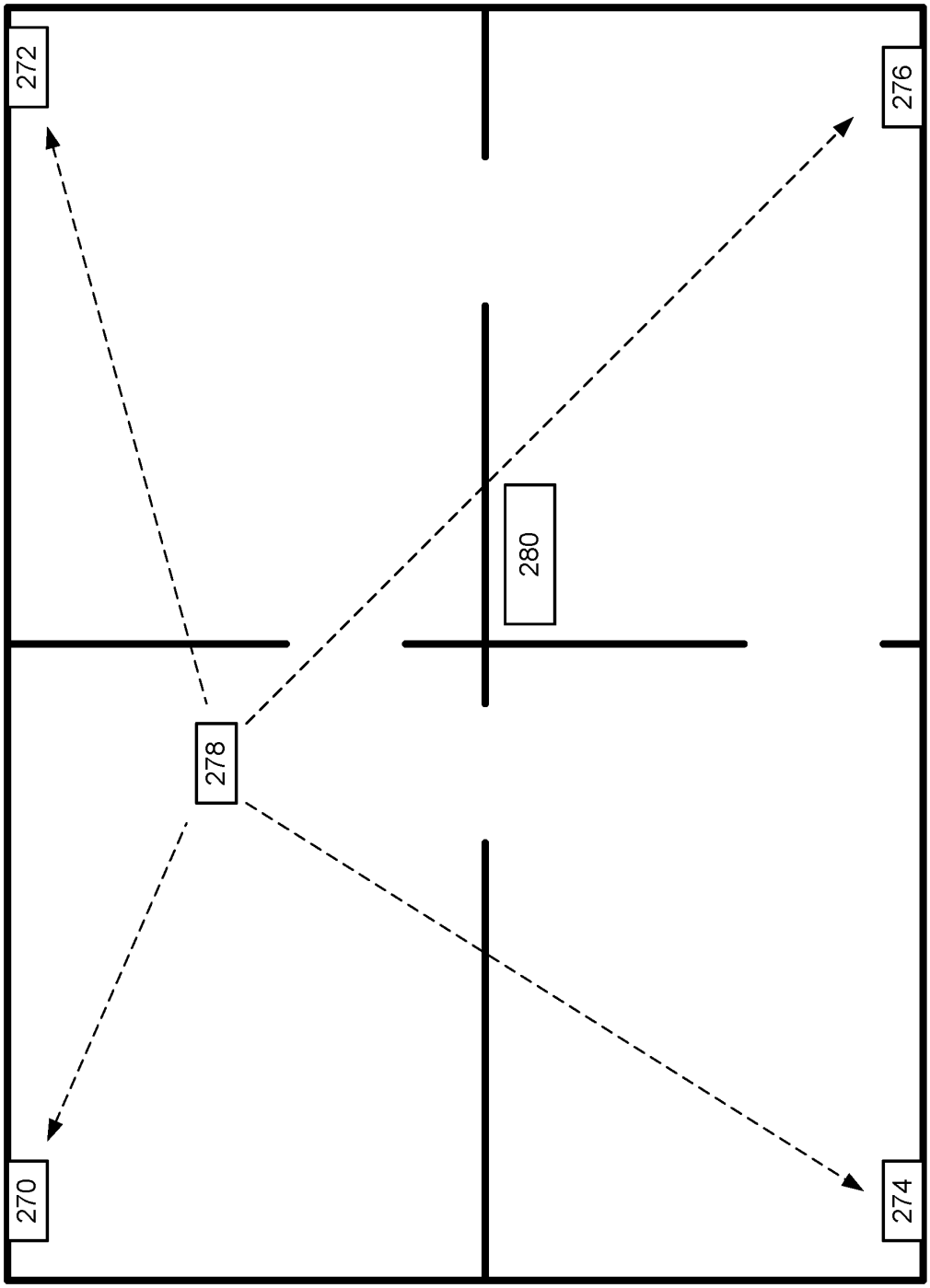

FIG. 32

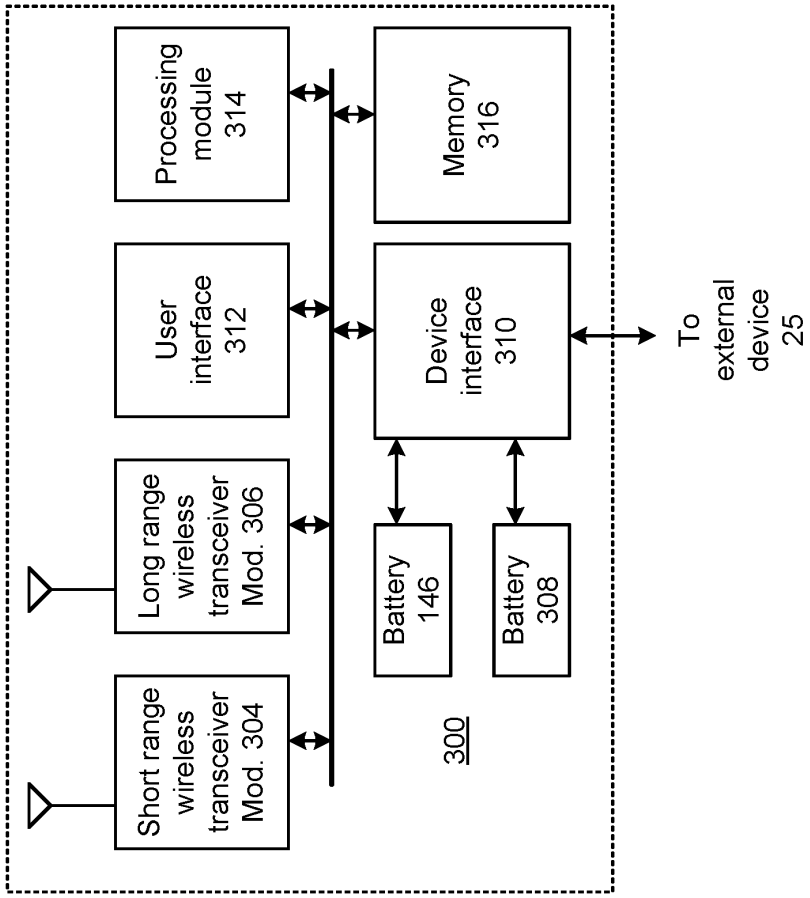
Short range wireless transceiver Mod. 304
Long range wireless transceiver Mod. 306
User interface 312
Processing module 314
300
Battery 146
Battery 308
Device interface 310
Memory 316
To external device 25

FIG. 33

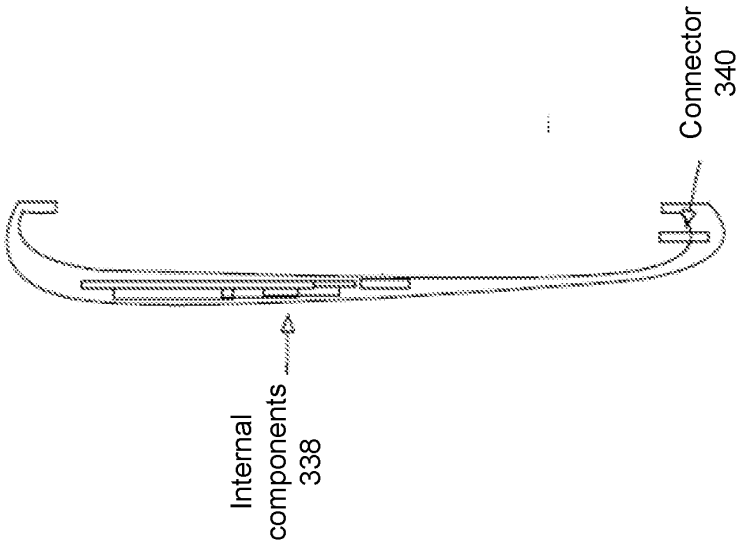
Internal components 338
Connector 340

FIG. 35

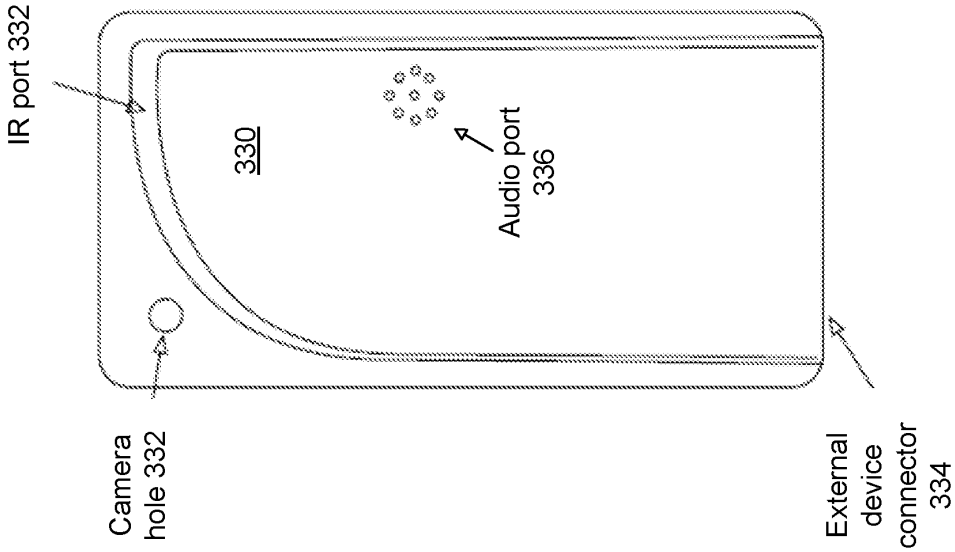
IR port 332
330
Audio port 336
Camera hole 332
External device connector 334

FIG. 34

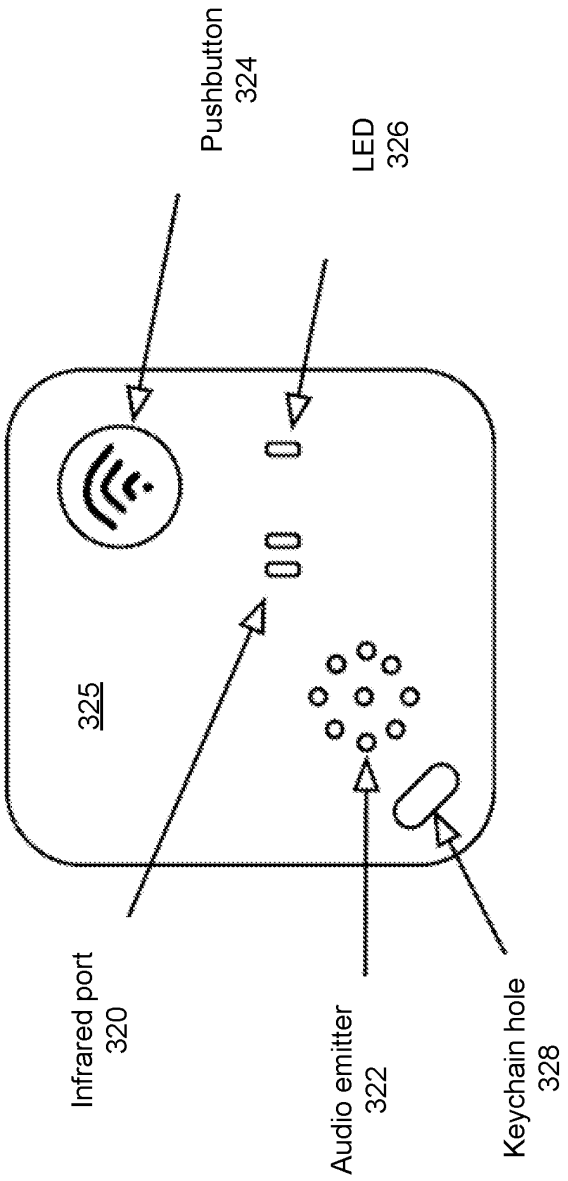
Pushbutton
324
LED
326
325
Infrared port
320
Audio emitter
322
Keychain hole
328

FIG. 36

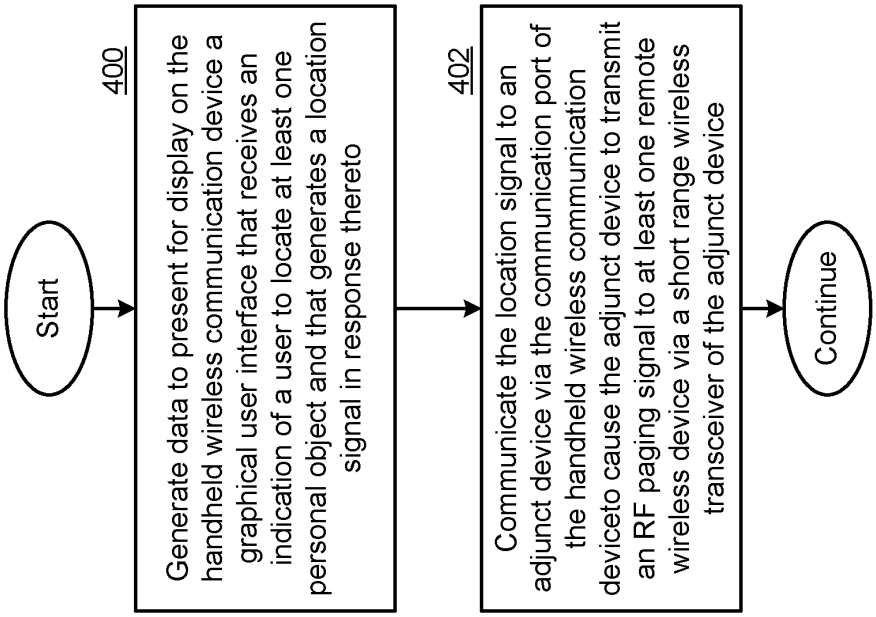
Start
400
Generate data to present for display on the handheld wireless communication device a graphical user interface that receives an indication of a user to locate at least one personal object and that generates a location signal in response thereto
402
Communicate the location signal to an adjunct device via the communication port of the handheld wireless communication deviceto cause the adjunct device to transmit an RF paging signal to at least one remote wireless device via a short range wireless transceiver of the adjunct device
Continue

FIG. 37

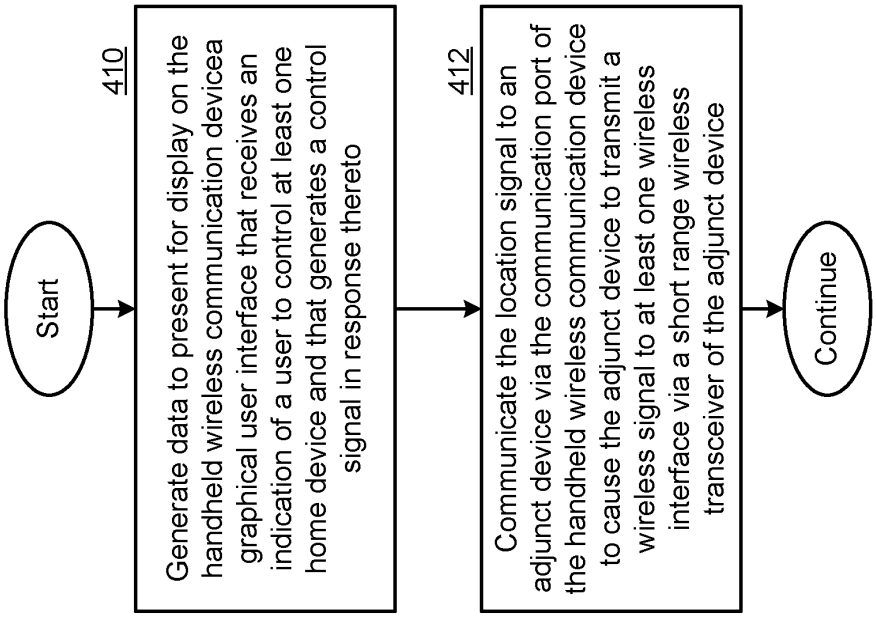
Start
410
Generate data to present for display on the handheld wireless communication deviceа graphical user interface that receives an indication of a user to control at least one home device and that generates a control signal in response thereto
412
Communicate the location signal to an adjunct device via the communication port of the handheld wireless communication device to cause the adjunct device to transmit a wireless signal to at least one wireless interface via a short range wireless transceiver of the adjunct device
Continue

FIG. 38

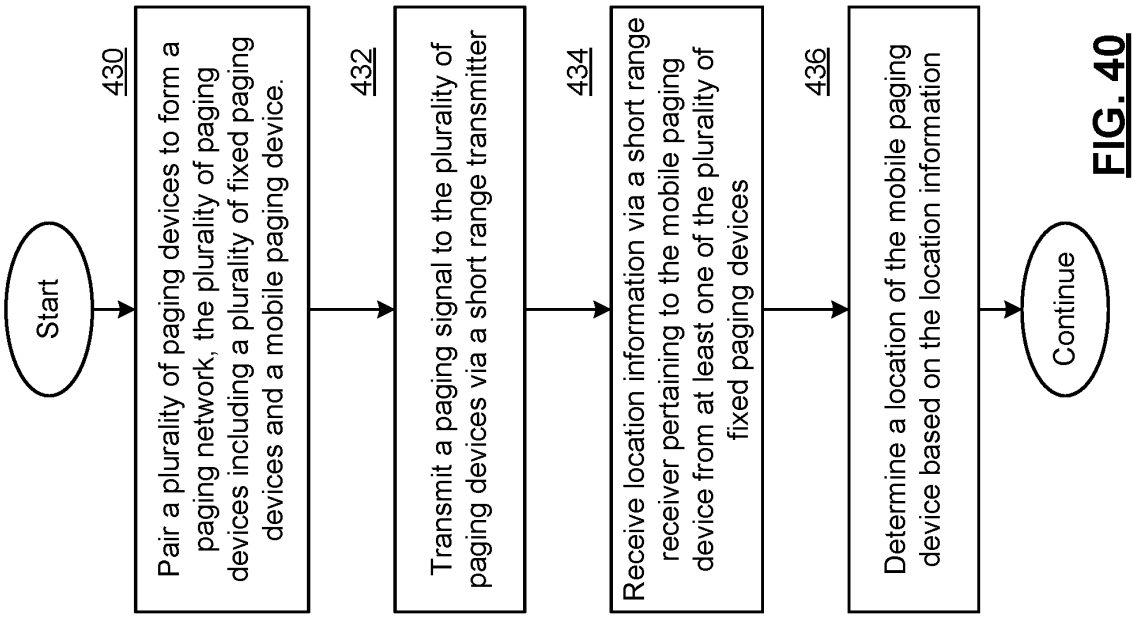
Start
430
Pair a plurality of paging devices to form a paging network, the plurality of paging devices including a plurality of fixed paging devices and a mobile paging device.
432
Transmit a paging signal to the plurality of paging devices via a short range transmitter
434
Receive location information via a short range receiver pertaining to the mobile paging device from at least one of the plurality of fixed paging devices
436
Determine a location of the mobile paging device based on the location information
Continue

FIG. 40

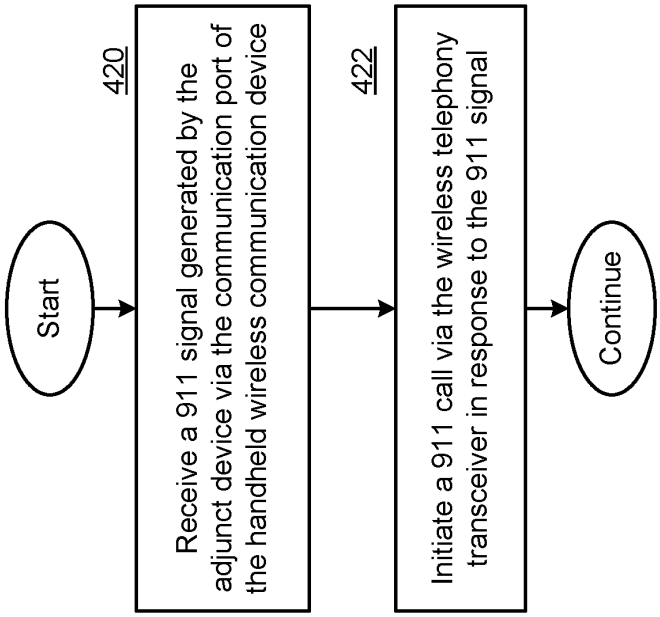
Start
420
Receive a 911 signal generated by the adjunct device via the communication port of the handheld wireless communication device
422
Initiate a 911 call via the wireless telephony transceiver in response to the 911 signal
Continue

FIG. 39

BIKN005C3

PTO/AIA/01 (06-12)
Approved for use through 01/31/2014. OMB 0651-0032
U.S. Patent and Trademark Office; U.S. DEPARTMENT OF COMMERCE
Under the Paperwork Reduction Act of 1995, no persons are required to respond to a collection of information unless it displays a valid OMB control number.

DECLARATION (37 CFR 1.63) FOR UTILITY OR DESIGN APPLICATION USING AN APPLICATION DATA SHEET (37 CFR 1.76)

Title of Invention	WIRELESS DEVICE AND METHODS FOR USE IN A PAGING NETWORK

As the below named inventor, I hereby declare that:

This declaration is directed to:

☐ The attached application, or

☒ United States application or PCT international application number 15/000,903

filed on 19 Jan 2016.

The above-identified application was made or authorized to be made by me.

I believe that I am the original inventor or an original joint inventor of a claimed invention in the application.

I hereby acknowledge that any willful false statement made in this declaration is punishable under 18 U.S.C. 1001 by fine or imprisonment of not more than five (5) years, or both.

WARNING:

Petitioner/applicant is cautioned to avoid submitting personal information in documents filed in a patent application that may contribute to identity theft. Personal information such as social security numbers, bank account numbers, or credit card numbers (other than a check or credit card authorization form PTO-2038 submitted for payment purposes) is never required by the USPTO to support a petition or an application. If this type of personal information is included in documents submitted to the USPTO, petitioners/applicants should consider redacting such personal information from the documents before submitting them to the USPTO. Petitioner/applicant is advised that the record of a patent application is available to the public after publication of the application (unless a non-publication request in compliance with 37 CFR 1.213(a) is made in the application) or issuance of a patent. Furthermore, the record from an abandoned application may also be available to the public if the application is referenced in a published application or an issued patent (see 37 CFR 1.14). Checks and credit card authorization forms PTO-2038 submitted for payment purposes are not retained in the application file and therefore are not publicly available.

LEGAL NAME OF INVENTOR

Inventor: John W. Howard Date (Optional) :

Signature:

Note: An application data sheet (PTO/SB/14 or equivalent), including naming the entire inventive entity, must accompany this form or must have been previously filed. Use an additional PTO/AIA/01 form for each additional inventor.

This collection of information is required by 35 U.S.C. 115 and 37 CFR 1.63. The information is required to obtain or retain a benefit by the public which is to file (and by the USPTO to process) an application. Confidentiality is governed by 35 U.S.C. 122 and 37 CFR 1.11 and 1.14. This collection is estimated to take 1 minute to complete, including gathering, preparing, and submitting the completed application form to the USPTO. Time will vary depending upon the individual case. Any comments on the amount of time you require to complete this form and/or suggestions for reducing this burden, should be sent to the Chief Information Officer, U.S. Patent and Trademark Office, U.S. Department of Commerce, P.O. Box 1450, Alexandria, VA 22313-1450. DO NOT SEND FEES OR COMPLETED FORMS TO THIS ADDRESS. **SEND TO: Commissioner for Patents, P.O. Box 1450, Alexandria, VA 22313-1450.**

If you need assistance in completing the form, call 1-800-PTO-9199 and select option 2.

BIKN005C3

PTO/AIA/01 (06-12)
Approved for use through 01/31/2014 OMB 0651-0032
U.S. Patent and Trademark Office; U.S. DEPARTMENT OF COMMERCE
Under the Paperwork Reduction Act of 1995, no persons are required to respond to a collection of information unless it displays a valid OMB control number.

DECLARATION (37 CFR 1.63) FOR UTILITY OR DESIGN APPLICATION USING AN APPLICATION DATA SHEET (37 CFR 1.76)

Title of Invention	WIRELESS DEVICE AND METHODS FOR USE IN A PAGING NETWORK

As the below named inventor, I hereby declare that:

This declaration is directed to:

☐ The attached application, or

☒ United States application or PCT international application number 15/000,903

filed on 19 Jan 2016.

The above-identified application was made or authorized to be made by me.

I believe that I am the original inventor or an original joint inventor of a claimed invention in the application.

I hereby acknowledge that any willful false statement made in this declaration is punishable under 18 U.S.C. 1001 by fine or imprisonment of not more than five (5) years, or both.

WARNING:

Petitioner/applicant is cautioned to avoid submitting personal information in documents filed in a patent application that may contribute to identity theft. Personal information such as social security numbers, bank account numbers, or credit card numbers (other than a check or credit card authorization form PTO-2038 submitted for payment purposes) is never required by the USPTO to support a petition or an application. If this type of personal information is included in documents submitted to the USPTO, petitioners/applicants should consider redacting such personal information from the documents before submitting them to the USPTO. Petitioner/applicant is advised that the record of a patent application is available to the public after publication of the application (unless a non-publication request in compliance with 37 CFR 1.213(a) is made in the application) or issuance of a patent. Furthermore, the record from an abandoned application may also be available to the public if the application is referenced in a published application or an issued patent (see 37 CFR 1.14). Checks and credit card authorization forms PTO-2038 submitted for payment purposes are not retained in the application file and therefore are not publicly available.

LEGAL NAME OF INVENTOR

Inventor: Richard Cutler Date (Optional) :

Signature:

Note: An application data sheet (PTO/SB/14 or equivalent), including naming the entire inventive entity, must accompany this form or must have been previously filed. Use an additional PTO/AIA/01 form for each additional inventor.

This collection of information is required by 35 U.S.C. 115 and 37 CFR 1.63. The information is required to obtain or retain a benefit by the public which is to file (and by the USPTO to process) an application. Confidentiality is governed by 35 U.S.C. 122 and 37 CFR 1.11 and 1.14. This collection is estimated to take 1 minute to complete, including gathering, preparing, and submitting the completed application form to the USPTO. Time will vary depending upon the individual case. Any comments on the amount of time you require to complete this form and/or suggestions for reducing this burden, should be sent to the Chief Information Officer, U.S. Patent and Trademark Office, U.S. Department of Commerce, P.O. Box 1450, Alexandria, VA 22313-1450. DO NOT SEND FEES OR COMPLETED FORMS TO THIS ADDRESS. **SEND TO: Commissioner for Patents, P.O. Box 1450, Alexandria, VA 22313-1450.**

If you need assistance in completing the form, call 1-800-PTO-9199 and select option 2.

BIKN005C3

PTO/AIA/01 (06-12)
Approved for use through 01/31/2014. OMB 0651-0032
U.S. Patent and Trademark Office; U.S. DEPARTMENT OF COMMERCE
Under the Paperwork Reduction Act of 1995, no persons are required to respond to a collection of information unless it displays a valid OMB control number.

DECLARATION (37 CFR 1.63) FOR UTILITY OR DESIGN APPLICATION USING AN APPLICATION DATA SHEET (37 CFR 1.76)

Title of Invention	WIRELESS DEVICE AND METHODS FOR USE IN A PAGING NETWORK

As the below named inventor, I hereby declare that:

This declaration is directed to:

☐ The attached application, or

☒ United States application or PCT international application number 15/000,903

filed on 19 Jan 2016.

The above-identified application was made or authorized to be made by me.

I believe that I am the original inventor or an original joint inventor of a claimed invention in the application.

I hereby acknowledge that any willful false statement made in this declaration is punishable under 18 U.S.C. 1001 by fine or imprisonment of not more than five (5) years, or both.

WARNING:

Petitioner/applicant is cautioned to avoid submitting personal information in documents filed in a patent application that may contribute to identity theft. Personal information such as social security numbers, bank account numbers, or credit card numbers (other than a check or credit card authorization form PTO-2038 submitted for payment purposes) is never required by the USPTO to support a petition or an application. If this type of personal information is included in documents submitted to the USPTO, petitioners/applicants should consider redacting such personal information from the documents before submitting them to the USPTO. Petitioner/applicant is advised that the record of a patent application is available to the public after publication of the application (unless a non-publication request in compliance with 37 CFR 1.213(a) is made in the application) or issuance of a patent. Furthermore, the record from an abandoned application may also be available to the public if the application is referenced in a published application or an issued patent (see 37 CFR 1.14). Checks and credit card authorization forms PTO-2038 submitted for payment purposes are not retained in the application file and therefore are not publicly available.

LEGAL NAME OF INVENTOR

Inventor: Robert M. Kennard Date (Optional): 03.25.17

Signature: Robert M Kennard

Note: An application data sheet (PTO/SB/14 or equivalent), including naming the entire inventive entity, must accompany this form or must have been previously filed. Use an additional PTO/AIA/01 form for each additional inventor.

This collection of information is required by 35 U.S.C. 115 and 37 CFR 1.63. The information is required to obtain or retain a benefit by the public which is to file (and by the USPTO to process) an application. Confidentiality is governed by 35 U.S.C. 122 and 37 CFR 1.11 and 1.14. This collection is estimated to take 1 minute to complete, including gathering, preparing, and submitting the completed application form to the USPTO. Time will vary depending upon the individual case. Any comments on the amount of time you require to complete this form and/or suggestions for reducing this burden, should be sent to the Chief Information Officer, U.S. Patent and Trademark Office, U.S. Department of Commerce, P.O. Box 1450, Alexandria, VA 22313-1450. DO NOT SEND FEES OR COMPLETED FORMS TO THIS ADDRESS. **SEND TO: Commissioner for Patents, P.O. Box 1450, Alexandria, VA 22313-1450.**

If you need assistance in completing the form, call 1-800-PTO-9199 and select option 2.

PTO/SB/08a (02-18)
Approved for use through 11/30/2020. OMB 0651-0031
U.S. Patent and Trademark Office; U.S. DEPARTMENT OF COMMERCE

Under the Paperwork Reduction Act of 1995, no persons are required to respond to a collection of information unless it contains a valid OMB control number.

INFORMATION DISCLOSURE STATEMENT BY APPLICANT (Not for submission under 37 CFR 1.99)		
	Application Number	
	Filing Date	2022-01-19
	First Named Inventor	John W. Howard
	Art Unit	
	Examiner Name	
	Attorney Docket Number	BIKN005C9

U.S.PATENTS						Remove
Examiner Initial*	Cite No	Patent Number	Kind Code[1]	Issue Date	Name of Patentee or Applicant of cited Document	Pages,Columns,Lines where Relevant Passages or Relevant Figures Appear
	1	4476469		1984-10-09	Lander	
	2	5146231		1992-09-08	Ghaem et al.	
	3	5343136		1994-08-30	Yamaguchi	
	4	5448261		1995-09-05	Koike	
	5	5497339		1996-03-05	Bernard	
	6	5545857		1996-08-13	Lee	
	7	5675524		1997-10-07	Bernard	
	8	5714932		1998-02-03	Castellon et al.	

INFORMATION DISCLOSURE STATEMENT BY APPLICANT (Not for submission under 37 CFR 1.99)	Application Number	
	Filing Date	2022-01-19
	First Named Inventor	John W. Howard
	Art Unit	
	Examiner Name	
	Attorney Docket Number	BIKN005C9

	9	5752205		1998-05-12	Dzung et al.	
	10	5857148		1999-01-05	Weisshappel et al.	
	11	5857157		1999-01-05	Shindo	
	12	5939981	A	1999-08-17	RENNEY MARJORIE	
	13	6067018		2000-05-23	Skelton et al.	
	14	6172640		2001-01-09	Durst et al.	
	15	6286060		2001-09-04	DiGiorgio et al.	
	16	6400270	A1	2002-06-04	Person	
	17	6446127		2002-09-03	Schuster et al.	
	18	6624752		2003-09-23	Klitsgaard et al.	
	19	6625472		2003-09-23	Farazmandnia et al.	

INFORMATION DISCLOSURE STATEMENT BY APPLICANT (Not for submission under 37 CFR 1.99)	Application Number	
	Filing Date	2022-01-19
	First Named Inventor	John W. Howard
	Art Unit	
	Examiner Name	
	Attorney Docket Number	BIKN005C9

	20	6774787		2004-08-10	Melbourne	
	21	6889057		2005-05-03	Tordera et al.	
	22	6980546		2005-12-27	Purpura et al.	
	23	6995654	B2	2006-02-07	NYSEN PAUL	
	24	7034684		2006-04-25	Boman et al.	
	25	7110789		2006-09-19	Curtiss et al.	
	26	7266391		2007-09-04	Warren	
	27	7330122	B2	2008-02-12	DERRICK BRUCE G	
	28	7340260	B2	2008-03-04	MCALEXANDER JOSEPH C	
	29	7375632	B1	2008-05-20	SEBANC JOHN	
	30	7453357		2008-11-18	Bernal-Silva et al.	

INFORMATION DISCLOSURE STATEMENT BY APPLICANT (Not for submission under 37 CFR 1.99)	Application Number	
	Filing Date	2022-01-19
	First Named Inventor	John W. Howard
	Art Unit	
	Examiner Name	
	Attorney Docket Number	BIKN005C9

	31	7647511	B2	2010-01-12	Misawa	
	32	7690994		2010-04-06	Dohta	
	33	7714737	B1	2010-05-11	MORNINGSTAR JAMES	
	34	7843427	B2	2010-11-30	Ording	
	35	7912503		2011-03-22	Chang et al.	
	36	8000647		2011-08-16	Hill	
	37	8018726	B2	2011-09-13	Friedlander	
	38	8078787		2011-12-13	Lydon et al.	
	39	8174359	B1	2012-05-08	VENI III SALVATORE	
	40	8253559	B2	2012-08-28	Howard	
	41	8253560	B2	2012-08-28	Howard	

INFORMATION DISCLOSURE STATEMENT BY APPLICANT (Not for submission under 37 CFR 1.99)	Application Number	
	Filing Date	2022-01-19
	First Named Inventor	John W. Howard
	Art Unit	
	Examiner Name	
	Attorney Docket Number	BIKN005C9

	42	8254878	B2	2012-08-28	Howard	
	43	8285248	B2	2012-10-09	Howard	
	44	8422954	B2	2013-04-16	Howard	
	45	8588806		2013-11-19	Howard et al.	
	46	8750928		2014-06-10	Moran et al.	
	47	9295024	B2	2016-03-22	Howard	
	48	10123161	B2	2018-11-06	Howard	

If you wish to add additional U.S. Patent citation information please click the Add button. Add

U.S.PATENT APPLICATION PUBLICATIONS Remove

Examiner Initial*	Cite No	Publication Number	Kind Code[1]	Publication Date	Name of Patentee or Applicant of cited Document	Pages,Columns,Lines where Relevant Passages or Relevant Figures Appear
	1	20020103008	A1	2002-08-01	Rahn Michael D. et al.	
	2	20030052860	A1	2003-03-20	Park Hee-Seon et al.	

INFORMATION DISCLOSURE STATEMENT BY APPLICANT (Not for submission under 37 CFR 1.99)	Application Number	
	Filing Date	2022-01-19
	First Named Inventor	John W. Howard
	Art Unit	
	Examiner Name	
	Attorney Docket Number	BIKN005C9

	3	20030162574	A1	2003-08-28	Fan	
	4	20030193399	A1	2003-10-16	Hum Peng Jong et al.	
	5	20040009748	A1	2004-01-15	HEINONEN TOMI	
	6	20040097127	A1	2004-05-20	Smith Simon et al.	
	7	20040125080	A1	2004-07-01	Ha	
	8	20040167820	A1	2004-08-26	Melick Diana et al.	
	9	20040204074	A1	2004-10-14	Desai Nimesh R.	
	10	20050065851	A1	2005-03-24	Aronoff	
	11	20050186968	A1	2005-08-25	Durst Jennifer et al.	
	12	20050231361	A1	2005-10-20	Godbey Darren Lee	
	13	20060012488	A1	2006-01-19	Hilbrink Marcel et al.	

INFORMATION DISCLOSURE STATEMENT BY APPLICANT (Not for submission under 37 CFR 1.99)	Application Number	
	Filing Date	2022-01-19
	First Named Inventor	John W. Howard
	Art Unit	
	Examiner Name	
	Attorney Docket Number	BIKN005C9

	14	20060152487	A1	2006-07-13	Grunnet-Jepsen Anders et al.	
	15	20060152488	A1	2006-07-13	Salsman Kenneth et al.	
	16	20060152489	A1	2006-07-13	Sweetser John et al.	
	17	20060154642	A1	2006-07-13	Scannell Robert F. JR.	
	18	20060259942	A1	2006-11-16	Toyama Kentaro et al.	
	19	20070005840	A1	2007-01-04	Cheng Yi-Tsung et al.	
	20	20070013526	A1	2007-01-18	Kazdin Ronald S. et al.	
	21	20070021148	A1	2007-01-25	Mahini Hassan	
	22	20070038785	A1	2007-02-15	Varanda Marcelo et al.	
	23	20070052177	A1	2007-03-08	Ikeda Akio et al.	
	24	20070060228	A1	2007-03-15	Akasaka Hideya et al.	

INFORMATION DISCLOSURE STATEMENT BY APPLICANT (Not for submission under 37 CFR 1.99)	Application Number	
	Filing Date	2022-01-19
	First Named Inventor	John W. Howard
	Art Unit	
	Examiner Name	
	Attorney Docket Number	BIKN005C9

	25	20070060384	A1	2007-03-15	Dohta	
	26	20070066394	A1	2007-03-22	Ikeda Akio et al.	
	27	20070077883	A1	2007-04-05	CHILDERS GARRETT D	
	28	20070080933	A1	2007-04-12	Chen et al.	
	29	20070130592	A1	2007-06-07	Haeusel Fred C.	
	30	20070136264	A1	2007-06-14	Tran Bao Q.	
	31	20070194925	A1	2007-08-23	KARR LAWRENCE J	
	32	20070279245	A1	2007-12-06	Sholem Steven	
	33	20080001814	A1	2008-01-03	Durst Jennifer et al.	
	34	20080012824	A1	2008-01-17	Grunnet-Jepsen Anders et al.	
	35	20080032713	A1	2008-02-07	Yang Shengqiang	

INFORMATION DISCLOSURE STATEMENT BY APPLICANT (Not for submission under 37 CFR 1.99)	Application Number	
	Filing Date	2022-01-19
	First Named Inventor	John W. Howard
	Art Unit	
	Examiner Name	
	Attorney Docket Number	BIKN005C9

	36	20080052750	A1	2008-02-28	Grunnet-Jepsen Anders et al.	
	37	20080062120	A1	2008-03-13	Wheeler Lorraine et al.	
	38	20080166968	A1	2008-07-10	Tang John et al.	
	39	20080218358	A1	2008-09-11	DERRICK BRUCE	
	40	20080278445	A1	2008-11-13	Sweetser John et al.	
	41	20090074051	B2	2009-03-19	MANAPRAGADA SAI C	
	42	20090207014	A1	2009-08-20	AYED MOURAD BEN	
	43	20090217335	A1	2009-08-27	Wong Richard Sai Kit et al.	
	44	20090237209	A1	2009-09-24	Seal Brian William et al.	
	45	20090240814	A1	2009-09-24	Brubacher	
	46	20090249247	A1	2009-10-01	Tseng	

INFORMATION DISCLOSURE STATEMENT BY APPLICANT (Not for submission under 37 CFR 1.99)	Application Number	
	Filing Date	2022-01-19
	First Named Inventor	John W. Howard
	Art Unit	
	Examiner Name	
	Attorney Docket Number	BIKN005C9

	47	20090284664	A1	2009-11-19	Barry Keith et al.	
	48	20110210849	A1	2011-09-01	Howard John W. et al.	
	49	20110210959	A1	2011-09-01	Howard	
	50	20110212699	A1	2011-09-01	Howard	
	51	20110212702	A1	2011-09-01	Howard	
	52	20110215921	A1	2011-09-08	Ben Ayed	
	53	20120077439	A1	2012-03-29	Howard	
	54	20140194148	A1	2014-07-10	Griffin	
	55	20160227362		2016-08-04	Howard	
	56	20180192236	A1	2018-07-05	Howard	

If you wish to add additional U.S. Published Application citation information please click the Add button. Add

FOREIGN PATENT DOCUMENTS Remove

INFORMATION DISCLOSURE STATEMENT BY APPLICANT (Not for submission under 37 CFR 1.99)	Application Number	
	Filing Date	2022-01-19
	First Named Inventor	John W. Howard
	Art Unit	
	Examiner Name	
	Attorney Docket Number	BIKN005C9

Examiner Initial*	Cite No	Foreign Document Number[3]	Country Code[2]	Kind Code[4]	Publication Date	Name of Patentee or Applicant of cited Document	Pages,Columns,Lines where Relevant Passages or Relevant Figures Appear	T[5]
	1	2006022645	WO	A1	2006-03-02	Cochlear Americas		

If you wish to add additional Foreign Patent Document citation information please click the Add button Add

NON-PATENT LITERATURE DOCUMENTS Remove

Examiner Initials*	Cite No	Include name of the author (in CAPITAL LETTERS), title of the article (when appropriate), title of the item (book, magazine, journal, serial, symposium, catalog, etc), date, pages(s), volume-issue number(s), publisher, city and/or country where published.	T[5]
	1	International Preliminary Report on Patentability; PCT Application No. PCT/US11/24923; February 10, 2012, 11 pages	
	2	International Search Report, Application Number PCTIUS2011/024923, April 19, 2011, 11 Pages	

If you wish to add additional non-patent literature document citation information please click the Add button Add

EXAMINER SIGNATURE

Examiner Signature		Date Considered	

*EXAMINER: Initial if reference considered, whether or not citation is in conformance with MPEP 609. Draw line through a citation if not in conformance and not considered. Include copy of this form with next communication to applicant.

[1] See Kind Codes of USPTO Patent Documents at www.USPTO.GOV or MPEP 901.04. [2] Enter office that issued the document, by the two-letter code (WIPO Standard ST.3). [3] For Japanese patent documents, the indication of the year of the reign of the Emperor must precede the serial number of the patent document. [4] Kind of document by the appropriate symbols as indicated on the document under WIPO Standard ST.16 if possible. [5] Applicant is to place a check mark here if English language translation is attached.

INFORMATION DISCLOSURE STATEMENT BY APPLICANT (Not for submission under 37 CFR 1.99)	Application Number	
	Filing Date	2022-01-19
	First Named Inventor	John W. Howard
	Art Unit	
	Examiner Name	
	Attorney Docket Number	BIKN005C9

CERTIFICATION STATEMENT

Please see 37 CFR 1.97 and 1.98 to make the appropriate selection(s):

That each item of information contained in the information disclosure statement was first cited in any communication from a foreign patent office in a counterpart foreign application not more than three months prior to the filing of the information disclosure statement. See 37 CFR 1.97(e)(1).

OR

☐ That no item of information contained in the information disclosure statement was cited in a communication from a foreign patent office in a counterpart foreign application, and, to the knowledge of the person signing the certification after making reasonable inquiry, no item of information contained in the information disclosure statement was known to any individual designated in 37 CFR 1.56(c) more than three months prior to the filing of the information disclosure statement. See 37 CFR 1.97(e)(2).

See attached certification statement.

The fee set forth in 37 CFR 1.17 (p) has been submitted herewith.

☒ A certification statement is not submitted herewith.

SIGNATURE

A signature of the applicant or representative is required in accordance with CFR 1.33, 10.18. Please see CFR 1.4(d) for the form of the signature.

Signature	/Bruce E. Stuckman, Ph.D./	Date (YYYY-MM-DD)	2022-01-19
Name/Print	Bruce E. Stuckman, Ph.D.	Registration Number	36693

This collection of information is required by 37 CFR 1.97 and 1.98. The information is required to obtain or retain a benefit by the public which is to file (and by the USPTO to process) an application. Confidentiality is governed by 35 U.S.C. 122 and 37 CFR 1.14. This collection is estimated to take 1 hour to complete, including gathering, preparing and submitting the completed application form to the USPTO. Time will vary depending upon the individual case. Any comments on the amount of time you require to complete this form and/or suggestions for reducing this burden, should be sent to the Chief Information Officer, U.S. Patent and Trademark Office, U.S. Department of Commerce, P.O. Box 1450, Alexandria, VA 22313-1450. DO NOT SEND FEES OR COMPLETED FORMS TO THIS ADDRESS. **SEND TO: Commissioner for Patents, P.O. Box 1450, Alexandria, VA 22313-1450.**

Privacy Act Statement

The Privacy Act of 1974 (P.L. 93-579) requires that you be given certain information in connection with your submission of the attached form related to a patent application or patent. Accordingly, pursuant to the requirements of the Act, please be advised that: (1) the general authority for the collection of this information is 35 U.S.C. 2(b)(2); (2) furnishing of the information solicited is voluntary; and (3) the principal purpose for which the information is used by the U.S. Patent and Trademark Office is to process and/or examine your submission related to a patent application or patent. If you do not furnish the requested information, the U.S. Patent and Trademark Office may not be able to process and/or examine your submission, which may result in termination of proceedings or abandonment of the application or expiration of the patent.

The information provided by you in this form will be subject to the following routine uses:

1. The information on this form will be treated confidentially to the extent allowed under the Freedom of Information Act (5 U.S.C. 552) and the Privacy Act (5 U.S.C. 552a). Records from this system of records may be disclosed to the Department of Justice to determine whether the Freedom of Information Act requires disclosure of these record s.

2. A record from this system of records may be disclosed, as a routine use, in the course of presenting evidence to a court, magistrate, or administrative tribunal, including disclosures to opposing counsel in the course of settlement negotiations.

3. A record in this system of records may be disclosed, as a routine use, to a Member of Congress submitting a request involving an individual, to whom the record pertains, when the individual has requested assistance from the Member with respect to the subject matter of the record.

4. A record in this system of records may be disclosed, as a routine use, to a contractor of the Agency having need for the information in order to perform a contract. Recipients of information shall be required to comply with the requirements of the Privacy Act of 1974, as amended, pursuant to 5 U.S.C. 552a(m).

5. A record related to an International Application filed under the Patent Cooperation Treaty in this system of records may be disclosed, as a routine use, to the International Bureau of the World Intellectual Property Organization, pursuant to the Patent Cooperation Treaty.

6. A record in this system of records may be disclosed, as a routine use, to another federal agency for purposes of National Security review (35 U.S.C. 181) and for review pursuant to the Atomic Energy Act (42 U.S.C. 218(c)).

7. A record from this system of records may be disclosed, as a routine use, to the Administrator, General Services, or his/her designee, during an inspection of records conducted by GSA as part of that agency's responsibility to recommend improvements in records management practices and programs, under authority of 44 U.S.C. 2904 and 2906. Such disclosure shall be made in accordance with the GSA regulations governing inspection of records for this purpose, and any other relevant (i.e., GSA or Commerce) directive. Such disclosure shall not be used to make determinations about individuals.

8. A record from this system of records may be disclosed, as a routine use, to the public after either publication of the application pursuant to 35 U.S.C. 122(b) or issuance of a patent pursuant to 35 U.S.C. 151. Further, a record may be disclosed, subject to the limitations of 37 CFR 1.14, as a routine use, to the public if the record was filed in an application which became abandoned or in which the proceedings were terminated and which application is referenced by either a published application, an application open to public inspections or an issued patent.

9. A record from this system of records may be disclosed, as a routine use, to a Federal, State, or local law enforcement agency, if the USPTO becomes aware of a violation or potential violation of law or regulation.

Doc Code: PA..
Document Description: Power of Attorney

PTO/AIA/82A (07-13)
Approved for use through 11/30/2014. OMB 0651-0051
U.S. Patent and Trademark Office; U.S. DEPARTMENT OF COMMERCE
Under the Paperwork Reduction Act of 1995, no persons are required to respond to a collection of information unless it displays a valid OMB control number.

TRANSMITTAL FOR POWER OF ATTORNEY TO ONE OR MORE REGISTERED PRACTITIONERS

NOTE: This form is to be submitted with the Power of Attorney by Applicant form (PTO/AIA/82B) to identify the application to which the Power of Attorney is directed, in accordance with 37 CFR 1.5, unless the application number and filing date are identified in the Power of Attorney by Applicant form. If neither form PTO/AIA/82A nor form PTO/AIA82B identifies the application to which the Power of Attorney is directed, the Power of Attorney will not be recognized in the application.

Application Number	
Filing Date	**2022-01-19**
First Named Inventor	**John W. Howard**
Title	**WIRELESS DEVICE AND METHODS FOR USE THEREWITH**
Art Unit	
Examiner Name	
Attorney Docket Number	**BIKN005C9**

SIGNATURE of Applicant or Patent Practitioner

Signature	**/Bruce Stuckman, Ph.D./**	Date (Optional)	**2022-01-19**
Name	**Bruce E. Stuckman**	Registration Number	**36,693**
Title (if Applicant is a juristic entity)			
Applicant Name (if Applicant is a juristic entity)			

NOTE: This form must be signed in accordance with 37 CFR 1.33. See 37 CFR 1.4(d) for signature requirements and certifications. If more than one applicant, use multiple forms.

☒ *Total of **1** forms are submitted.

This collection of information is required by 37 CFR 1.131, 1.32, and 1.33. The information is required to obtain or retain a benefit by the public which is to file (and by the USPTO to process) an application. Confidentiality is governed by 35 U.S.C. 122 and 37 CFR 1.11 and 1.14. This collection is estimated to take 3 minutes to complete, including gathering, preparing, and submitting the completed application form to the USPTO. Time will vary depending upon the individual case. Any comments on the amount of time you require to complete this form and/or suggestions for reducing this burden, should be sent to the Chief Information Officer, U.S. Patent and Trademark Office, U.S. Department of Commerce, P.O. Box 1450, Alexandria, VA 22313-1450. DO NOT SEND FEES OR COMPLETED FORMS TO THIS ADDRESS. **SEND TO: Commissioner for Patents, P.O. Box 1450, Alexandria, VA 22313-1450.**

If you need assistance in completing the form, call 1-800-PTO-9199 and select option 2.

Doc Code: PA..
Document Description: Power of Attorney

PTO/AIA/82B (07-13)
Approved for use through 11/30/2014. OMB 0651-0051
U.S. Patent and Trademark Office; U.S. DEPARTMENT OF COMMERCE
Under the Paperwork Reduction Act of 1995, no persons are required to respond to a collection of information unless it displays a valid OMB control number

POWER OF ATTORNEY BY APPLICANT

I hereby revoke all previous powers of attorney given in the application identified in either the attached transmittal letter or the boxes below.

Application Number	Filing Date

(Note: The boxes above may be left blank if information is provided on form PTO/AIA/82A.)

☑ I hereby appoint the Patent Practitioner(s) associated with the following Customer Number as my/our attorney(s) or agent(s), and to transact all business in the United States Patent and Trademark Office connected therewith for the application referenced in the attached transmittal letter (form PTO/AIA/82A) or identified above: 34399

OR

☐ I hereby appoint Practitioner(s) named in the attached list (form PTO/AIA/82C) as my/our attorney(s) or agent(s), and to transact all business in the United States Patent and Trademark Office connected therewith for the patent application referenced in the attached transmittal letter (form PTO/AIA/82A) or identified above. (Note: Complete form PTO/AIA/82C.)

Please recognize or change the correspondence address for the application identified in the attached transmittal letter to:

☐ The address associated with the above-mentioned Customer Number

OR

☑ The address associated with Customer Number: 34399

OR

Firm or Individual Name					
Address					
City		State		Zip	
Country					
Telephone		Email			

I am the Applicant (if the Applicant is a juristic entity, list the Applicant name in the box):

THL Holding Company, LLC

☐ Inventor or Joint Inventor (title not required below)

☐ Legal Representative of a Deceased or Legally Incapacitated Inventor (title not required below)

☑ Assignee or Person to Whom the Inventor is Under an Obligation to Assign (provide signer's title if applicant is a juristic entity)

☐ Person Who Otherwise Shows Sufficient Proprietary Interest (e.g., a petition under 37 CFR 1.46(b)(2) was granted in the application or is concurrently being filed with this document) (provide signer's title if applicant is a juristic entity)

SIGNATURE of Applicant for Patent

The undersigned (whose title is supplied below) is authorized to act on behalf of the applicant (e.g., where the applicant is a juristic entity).

Signature		Date (Optional)	November 27, 2013
Name	John W. Howard		
Title	CEO		

NOTE: Signature - This form must be signed by the applicant in accordance with 37 CFR 1.33. See 37 CFR 1.4 for signature requirements and certifications. If more than one applicant, use multiple forms.

☑ Total of ONE forms are submitted.

This collection of information is required by 37 CFR 1.131, 1.32, and 1.33. The information is required to obtain or retain a benefit by the public which is to file (and by the USPTO to process) an application. Confidentiality is governed by 35 U.S.C. 122 and 37 CFR 1.11 and 1.14. This collection is estimated to take 3 minutes to complete, including gathering, preparing, and submitting the completed application form to the USPTO. Time will vary depending upon the individual case. Any comments on the amount of time you require to complete this form and/or suggestions for reducing this burden, should be sent to the Chief Information Officer, U.S. Patent and Trademark Office, U.S. Department of Commerce, P.O. Box 1450, Alexandria, VA 22313-1450. DO NOT SEND FEES OR COMPLETED FORMS TO THIS ADDRESS. **SEND TO: Commissioner for Patents, P.O. Box 1450, Alexandria, VA 22313-1450.**

If you need assistance in completing the form, call 1-800-PTO-9199 and select option 2.

Electronic Patent Application Fee Transmittal

Application Number:	
Filing Date:	
Title of Invention:	WIRELESS DEVICE AND METHODS FOR USE THEREWITH
First Named Inventor/Applicant Name:	John W. Howard
Filer:	Bruce Edward Stuckman/Debbie Watson
Attorney Docket Number:	BIKN005C9

Filed as Small Entity

Filing Fees for Track I Prioritized Examination - Nonprovisional Application under 35 USC 111(a)

Description	Fee Code	Quantity	Amount	Sub-Total in USD($)
Basic Filing:				
UTILITY FILING FEE (ELECTRONIC FILING)	4011	1	80	80
UTILITY SEARCH FEE	2111	1	350	350
UTILITY EXAMINATION FEE	2311	1	400	400
REQUEST FOR PRIORITIZED EXAMINATION	2817	1	2100	2100
Pages:				
Claims:				
CLAIMS IN EXCESS OF 20	2202	10	50	500
INDEPENDENT CLAIMS IN EXCESS OF 3	2201	1	240	240

Description	Fee Code	Quantity	Amount	Sub-Total in USD($)
Miscellaneous-Filing:				
PUBL. FEE- EARLY, VOLUNTARY, OR NORMAL	1504	1	0	0
PROCESSING FEE, EXCEPT PROV. APPLS.	2830	1	70	70
Petition:				
Patent-Appeals-and-Interference:				
Post-Allowance-and-Post-Issuance:				
Extension-of-Time:				
Miscellaneous:				
			Total in USD ($)	**3740**

Electronic Acknowledgement Receipt	
EFS ID:	44772586
Application Number:	17578676
International Application Number:	
Confirmation Number:	1996
Title of Invention:	WIRELESS DEVICE AND METHODS FOR USE THEREWITH
First Named Inventor/Applicant Name:	John W. Howard
Customer Number:	34399
Filer:	Bruce Edward Stuckman/Debbie Watson
Filer Authorized By:	Bruce Edward Stuckman
Attorney Docket Number:	BIKN005C9
Receipt Date:	19-JAN-2022
Filing Date:	
Time Stamp:	12:06:14
Application Type:	Utility under 35 USC 111(a)

Payment information:

Submitted with Payment	yes
Payment Type	CARD
Payment was successfully received in RAM	$3740
RAM confirmation Number	E20221IC07074716
Deposit Account	502126
Authorized User	Debbie Watson
The Director of the USPTO is hereby authorized to charge indicated fees and credit any overpayment as follows: 37 CFR 1.16 (National application filing, search, and examination fees) 37 CFR 1.17 (Patent application and reexamination processing fees)	

37 CFR 1.20 (Post Issuance fees)

File Listing:

Document Number	Document Description	File Name	File Size(Bytes)/ Message Digest	Multi Part /.zip	Pages (if appl.)
1	TrackOne Request	BIKN005C9_TRACKONEREQ.pdf	114466 73b9623cc5a6bd866a96370c61a6b4e1501d25fb	no	2
Warnings:					
Information:					
2	Application Data Sheet	BIKN005C9_ADS.pdf	1227173 b8d8178f74d1e52c4ae12245781bfd051c378675	no	10
Warnings:					
Information:					
3	Transmittal of New Application	BIKN005C9_APPSTMT.pdf	82725 34f04b21656fc776d6ded5476e6f5ba9e73d7124	no	1
Warnings:					
Information:					
4		BIKN005C9_APP.pdf	263777 2a0bce257c6a11a7a728f183f9237f43060fa472	yes	68

Multipart Description/PDF files in .zip description

Document Description	Start	End
Specification	1	57
Claims	58	67
Abstract	68	68

Warnings:					
Information:					
5	Drawings-only black and white line drawings	BIKN005C9_DWGS.pdf	802695 1fc8b75d064c83123db283c824e80d8ab7c6f56a	no	22

Warnings:					
Information:					
6	Oath or Declaration filed	BIKN005C9_DEC.pdf	951360 0b89291712d75dee6c7b128d8f921e81da3d58bd	no	3
Warnings:					
Information:					
7	Information Disclosure Statement (IDS) Form (SB08)	BIKN005C9_IDS.pdf	1055933 fdb4e4656cf26c6ac7cc671083dbc8c64b2f4009	no	13
Warnings:					
Information:					
8	Petition for Expedited Foreign Filing Licenses	BIKN005C9_POA.pdf	663566 62a49e80b3773473e12d2bf6667455d9f0e2e30d	no	2
Warnings:					
Information:					
9	Fee Worksheet (SB06)	fee-info.pdf	55480 1ed6c032c3875dfb301690e2c12a8b0ffe3287ca	no	2
Warnings:					
Information:					
			Total Files Size (in bytes):	5217175	

This Acknowledgement Receipt evidences receipt on the noted date by the USPTO of the indicated documents, characterized by the applicant, and including page counts, where applicable. It serves as evidence of receipt similar to a Post Card, as described in MPEP 503.

<u>New Applications Under 35 U.S.C. 111</u>
If a new application is being filed and the application includes the necessary components for a filing date (see 37 CFR 1.53(b)-(d) and MPEP 506), a Filing Receipt (37 CFR 1.54) will be issued in due course and the date shown on this Acknowledgement Receipt will establish the filing date of the application.
<u>National Stage of an International Application under 35 U.S.C. 371</u>
If a timely submission to enter the national stage of an international application is compliant with the conditions of 35 U.S.C. 371 and other applicable requirements a Form PCT/DO/EO/903 indicating acceptance of the application as a national stage submission under 35 U.S.C. 371 will be issued in addition to the Filing Receipt, in due course.
<u>New International Application Filed with the USPTO as a Receiving Office</u>
If a new international application is being filed and the international application includes the necessary components for an international filing date (see PCT Article 11 and MPEP 1810), a Notification of the International Application Number and of the International Filing Date (Form PCT/RO/105) will be issued in due course, subject to prescriptions concerning national security, and the date shown on this Acknowledgement Receipt will establish the international filing date of the application.

Doc Code: TRACK1.REQ
Document Description: TrackOne Request

PTO/AIA/424 (04-14)

CERTIFICATION AND REQUEST FOR PRIORITIZED EXAMINATION UNDER 37 CFR 1.102(e) (Page 1 of 1)

First Named Inventor:	John W. Howard	Nonprovisional Application Number (if known):	
Title of Invention:	WIRELESS DEVICE AND METHODS FOR USE THEREWITH		

APPLICANT HEREBY CERTIFIES THE FOLLOWING AND REQUESTS PRIORITIZED EXAMINATION FOR THE ABOVE-IDENTIFIED APPLICATION.

1. The processing fee set forth in 37 CFR 1.17(i)(1) and the prioritized examination fee set forth in 37 CFR 1.17(c) have been filed with the request. The publication fee requirement is met because that fee, set forth in 37 CFR 1.18(d), is currently $0. The basic filing fee, search fee, and examination fee are filed with the request or have been already been paid. I understand that any required excess claims fees or application size fee must be paid for the application.

2. I understand that the application may not contain, or be amended to contain, more than four independent claims, more than thirty total claims, or any multiple dependent claims, and that any request for an extension of time will cause an outstanding Track I request to be dismissed.

3. The applicable box is checked below:

I. ☑ Original Application (Track One) - Prioritized Examination under § 1.102(e)(1)

i. (a) The application is an original nonprovisional utility application filed under 35 U.S.C. 111(a). This certification and request is being filed with the utility application via EFS-Web.

---OR---

(b) The application is an original nonprovisional plant application filed under 35 U.S.C. 111(a). This certification and request is being filed with the plant application in paper.

ii. An executed inventor's oath or declaration under 37 CFR 1.63 or 37 CFR 1.64 for each inventor, **or** the application data sheet meeting the conditions specified in 37 CFR 1.53(f)(3)(i) is filed with the application.

II. ☐ Request for Continued Examination - Prioritized Examination under § 1.102(e)(2)

i. A request for continued examination has been filed with, or prior to, this form.
ii. If the application is a utility application, this certification and request is being filed via EFS-Web.
iii. The application is an original nonprovisional utility application filed under 35 U.S.C. 111(a), or is a national stage entry under 35 U.S.C. 371.
iv. This certification and request is being filed prior to the mailing of a first Office action responsive to the request for continued examination.
v. No prior request for continued examination has been granted prioritized examination status under 37 CFR 1.102(e)(2).

Signature /Bruce E. Stuckman, Ph.D./	Date 2022-01-19
Name (Print/Typed) Bruce E. Stuckman, Ph.D.	Practitioner Registration Number 36693

Note: *This form must be signed in accordance with 37 CFR 1.33. See 37 CFR 1.4(d) for signature requirements and certifications. Submit multiple forms if more than one signature is required.**

☑ *Total of one forms are submitted.

Privacy Act Statement

The **Privacy Act of 1974 (P.L. 93-579)** requires that you be given certain information in connection with your submission of the attached form related to a patent application or patent. Accordingly, pursuant to the requirements of the Act, please be advised that: (1) the general authority for the collection of this information is 35 U.S.C. 2(b)(2); (2) furnishing of the information solicited is voluntary; and (3) the principal purpose for which the information is used by the U.S. Patent and Trademark Office is to process and/or examine your submission related to a patent application or patent. If you do not furnish the requested information, the U.S. Patent and Trademark Office may not be able to process and/or examine your submission, which may result in termination of proceedings or abandonment of the application or expiration of the patent.

The information provided by you in this form will be subject to the following routine uses:

1. The information on this form will be treated confidentially to the extent allowed under the Freedom of Information Act (5 U.S.C. 552) and the Privacy Act (5 U.S.C 552a). Records from this system of records may be disclosed to the Department of Justice to determine whether disclosure of these records is required by the Freedom of Information Act.
2. A record from this system of records may be disclosed, as a routine use, in the course of presenting evidence to a court, magistrate, or administrative tribunal, including disclosures to opposing counsel in the course of settlement negotiations.
3. A record in this system of records may be disclosed, as a routine use, to a Member of Congress submitting a request involving an individual, to whom the record pertains, when the individual has requested assistance from the Member with respect to the subject matter of the record.
4. A record in this system of records may be disclosed, as a routine use, to a contractor of the Agency having need for the information in order to perform a contract. Recipients of information shall be required to comply with the requirements of the Privacy Act of 1974, as amended, pursuant to 5 U.S.C. 552a(m).
5. A record related to an International Application filed under the Patent Cooperation Treaty in this system of records may be disclosed, as a routine use, to the International Bureau of the World Intellectual Property Organization, pursuant to the Patent Cooperation Treaty.
6. A record in this system of records may be disclosed, as a routine use, to another federal agency for purposes of National Security review (35 U.S.C. 181) and for review pursuant to the Atomic Energy Act (42 U.S.C. 218(c)).
7. A record from this system of records may be disclosed, as a routine use, to the Administrator, General Services, or his/her designee, during an inspection of records conducted by GSA as part of that agency's responsibility to recommend improvements in records management practices and programs, under authority of 44 U.S.C. 2904 and 2906. Such disclosure shall be made in accordance with the GSA regulations governing inspection of records for this purpose, and any other relevant (*i.e.*, GSA or Commerce) directive. Such disclosure shall not be used to make determinations about individuals.
8. A record from this system of records may be disclosed, as a routine use, to the public after either publication of the application pursuant to 35 U.S.C. 122(b) or issuance of a patent pursuant to 35 U.S.C. 151. Further, a record may be disclosed, subject to the limitations of 37 CFR 1.14, as a routine use, to the public if the record was filed in an application which became abandoned or in which the proceedings were terminated and which application is referenced by either a published application, an application open to public inspection or an issued patent.
9. A record from this system of records may be disclosed, as a routine use, to a Federal, State, or local law enforcement agency, if the USPTO becomes aware of a violation or potential violation of law or regulation.

PTO/AIA/14 (02-18)
Approved for use through 11/30/2020. OMB 0651-0032
U.S. Patent and Trademark Office; U.S. DEPARTMENT OF COMMERCE
Under the Paperwork Reduction Act of 1995, no persons are required to respond to a collection of information unless it contains a valid OMB control number.

Application Data Sheet 37 CFR 1.76	Attorney Docket Number	BIKN005C9
	Application Number	
Title of Invention	WIRELESS DEVICE AND METHODS FOR USE THEREWITH	

The application data sheet is part of the provisional or nonprovisional application for which it is being submitted. The following form contains the bibliographic data arranged in a format specified by the United States Patent and Trademark Office as outlined in 37 CFR 1.76.
This document may be completed electronically and submitted to the Office in electronic format using the Electronic Filing System (EFS) or the document may be printed and included in a paper filed application.

Secrecy Order 37 CFR 5.2:

☐ Portions or all of the application associated with this Application Data Sheet may fall under a Secrecy Order pursuant to 37 CFR 5.2 (Paper filers only. Applications that fall under Secrecy Order may not be filed electronically.)

Inventor Information:

Inventor 1 Remove

Legal Name

Prefix	Given Name	Middle Name	Family Name	Suffix
	John	W.	Howard	

Residence Information (Select One) ● US Residency Non US Residency Active US Military Service

City	Cedar Park	State/Province	TX	Country of Residence i	US

Mailing Address of Inventor:

Address 1	111 Buckshot Way		
Address 2			
City	Cedar Park	State/Province	TX
Postal Code	78618	Country i	US

Inventor 2 Remove

Legal Name

Prefix	Given Name	Middle Name	Family Name	Suffix
	Richard		Cutler	

Residence Information (Select One) ◉ US Residency Non US Residency Active US Military Service

City	Round Rock	State/Province	TX	Country of Residence i	US

Mailing Address of Inventor:

Address 1	3613 Laurel Bay Loop		
Address 2			
City	Round Rock	State/Province	TX
Postal Code	78681	Country i	US

Inventor 3 Remove

Legal Name

Prefix	Given Name	Middle Name	Family Name	Suffix
	Robert	M.	Kennard	

Residence Information (Select One) ◉ US Residency Non US Residency Active US Military Service

PTO/AIA/14 (02-18)
Approved for use through 11/30/2020. OMB 0651-0032
U.S. Patent and Trademark Office; U.S. DEPARTMENT OF COMMERCE
Under the Paperwork Reduction Act of 1995, no persons are required to respond to a collection of information unless it contains a valid OMB control number.

Application Data Sheet 37 CFR 1.76	Attorney Docket Number	BIKN005C9
	Application Number	
Title of Invention	WIRELESS DEVICE AND METHODS FOR USE THEREWITH	

City	Dallas	State/Province	TX	Country of Residence i	US

Mailing Address of Inventor:

Address 1	2919 Bookhout Street		
Address 2			
City	Dallas	**State/Province**	TX
Postal Code	75201	**Country i**	US

All Inventors Must Be Listed - Additional Inventor Information blocks may be generated within this form by selecting the **Add** button. Add

Correspondence Information:

Enter either Customer Number or complete the Correspondence Information section below. For further information see 37 CFR 1.33(a).

☐ **An Address is being provided for the correspondence Information of this application.**

Customer Number	34399		
Email Address	bstuckman@texaspatents.com	Add Email	Remove Email

Application Information:

Title of the Invention	WIRELESS DEVICE AND METHODS FOR USE THEREWITH		
Attorney Docket Number	BIKN005C9	**Small Entity Status Claimed**	☒
Application Type	Nonprovisional		
Subject Matter	Utility		
Total Number of Drawing Sheets (if any)	22	**Suggested Figure for Publication (if any)**	

Filing By Reference:

Only complete this section when filing an application by reference under 35 U.S.C. 111(c) and 37 CFR 1.57(a). Do not complete this section if application papers including a specification and any drawings are being filed. Any domestic benefit or foreign priority information must be provided in the appropriate section(s) below (i.e., "Domestic Benefit/National Stage Information" and "Foreign Priority Information").

For the purposes of a filing date under 37 CFR 1.53(b), the description and any drawings of the present application are replaced by this reference to the previously filed application, subject to conditions and requirements of 37 CFR 1.57(a).

Application number of the previously filed application	Filing date (YYYY-MM-DD)	Intellectual Property Authority or Country

Publication Information:

☐ Request Early Publication (Fee required at time of Request 37 CFR 1.219)

☐ **Request Not to Publish.** I hereby request that the attached application not be published under 35 U.S.C. 122(b) and certify that the invention disclosed in the attached application **has not and will not** be the subject of an application filed in another country, or under a multilateral international agreement, that requires publication at eighteen months after filing.

Under the Paperwork Reduction Act of 1995, no persons are required to respond to a collection of information unless it contains a valid OMB control number.

Application Data Sheet 37 CFR 1.76	Attorney Docket Number	BIKN005C9
	Application Number	
Title of Invention	WIRELESS DEVICE AND METHODS FOR USE THEREWITH	

Representative Information:

Representative information should be provided for all practitioners having a power of attorney in the application. Providing this information in the Application Data Sheet does not constitute a power of attorney in the application (see 37 CFR 1.32).
Either enter Customer Number or complete the Representative Name section below. If both sections are completed the customer Number will be used for the Representative Information during processing.

Please Select One:	● Customer Number	US Patent Practitioner	◯ Limited Recognition (37 CFR 11.9)
Customer Number	84399		

Domestic Benefit/National Stage Information:

This section allows for the applicant to either claim benefit under 35 U.S.C. 119(e), 120, 121, 365(c), or 386(c) or indicate National Stage entry from a PCT application. Providing benefit claim information in the Application Data Sheet constitutes the specific reference required by 35 U.S.C. 119(e) or 120, and 37 CFR 1.78.
When referring to the current application, please leave the "Application Number" field blank.

Prior Application Status	Pending		Remove
Application Number	Continuity Type	Prior Application Number	Filing or 371(c) Date (YYYY-MM-DD)
	Continuation of	17/036535	2020-09-29

Prior Application Status	Patented				Remove
Application Number	Continuity Type	Prior Application Number	Filing Date (YYYY-MM-DD)	Patent Number	Issue Date (YYYY-MM-DD)
17/036535	Continuation of	16/837481	2020-04-01	10834539	2020-11-10

Prior Application Status	Patented				Remove
Application Number	Continuity Type	Prior Application Number	Filing Date (YYYY-MM-DD)	Patent Number	Issue Date (YYYY-MM-DD)
16/837481	Continuation of	16/540665	2019-08-14	10645537	2020-05-05

Prior Application Status	Patented				Remove
Application Number	Continuity Type	Prior Application Number	Filing Date (YYYY-MM-DD)	Patent Number	Issue Date (YYYY-MM-DD)
16/540665	Continuation of	16/150498	2018-10-03	10440501	2019-10-08

Prior Application Status	Patented				Remove
Application Number	Continuity Type	Prior Application Number	Filing Date (YYYY-MM-DD)	Patent Number	Issue Date (YYYY-MM-DD)
16/150498	Continuation of	15/910654	2018-03-02	10123161	2018-11-06

Under the Paperwork Reduction Act of 1995, no persons are required to respond to a collection of information unless it contains a valid OMB control number.

Application Data Sheet 37 CFR 1.76	Attorney Docket Number	BIKN005C9
	Application Number	
Title of Invention	WIRELESS DEVICE AND METHODS FOR USE THEREWITH	

Prior Application Status	Patented				Remove
Application Number	Continuity Type	Prior Application Number	Filing Date (YYYY-MM-DD)	Patent Number	Issue Date (YYYY-MM-DD)
15/910654	Continuation of	15/000903	2016-01-19	9942700	2018-04-10
Prior Application Status	Patented				Remove
Application Number	Continuity Type	Prior Application Number	Filing Date (YYYY-MM-DD)	Patent Number	Issue Date (YYYY-MM-DD)
15/000903	Continuation of	14/281077	2014-05-19	9295024	2016-03-22
Prior Application Status	Patented				Remove
Application Number	Continuity Type	Prior Application Number	Filing Date (YYYY-MM-DD)	Patent Number	Issue Date (YYYY-MM-DD)
14/281077	Continuation of	14/044202	2013-10-02	8768381	2014-07-01
Prior Application Status	Patented				Remove
Application Number	Continuity Type	Prior Application Number	Filing Date (YYYY-MM-DD)	Patent Number	Issue Date (YYYY-MM-DD)
14/044202	Continuation of	12/713346	2010-02-26	8588806	2013-11-19

Additional Domestic Benefit/National Stage Data may be generated within this form by selecting the **Add** button. Add

Foreign Priority Information:

This section allows for the applicant to claim priority to a foreign application. Providing this information in the application data sheet constitutes the claim for priority as required by 35 U.S.C. 119(b) and 37 CFR 1.55. When priority is claimed to a foreign application that is eligible for retrieval under the priority document exchange program (PDX)[i] the information will be used by the Office to automatically attempt retrieval pursuant to 37 CFR 1.55(i)(1) and (2). Under the PDX program, applicant bears the ultimate responsibility for ensuring that a copy of the foreign application is received by the Office from the participating foreign intellectual property office, or a certified copy of the foreign priority application is filed, within the time period specified in 37 CFR 1.55(g)(1).

Remove

Application Number	Country[i]	Filing Date (YYYY-MM-DD)	Access Code[i] (if applicable)

Additional Foreign Priority Data may be generated within this form by selecting the **Add** button. Add

Statement under 37 CFR 1.55 or 1.78 for AIA (First Inventor to File) Transition Applications

PTO/AIA/14 (02-18)
Approved for use through 11/30/2020. OMB 0651-0032
U.S. Patent and Trademark Office; U.S. DEPARTMENT OF COMMERCE
Under the Paperwork Reduction Act of 1995, no persons are required to respond to a collection of information unless it contains a valid OMB control number.

Application Data Sheet 37 CFR 1.76	Attorney Docket Number	BIKN005C9
	Application Number	
Title of Invention	WIRELESS DEVICE AND METHODS FOR USE THEREWITH	

☐ This application (1) claims priority to or the benefit of an application filed before March 16, 2013 and (2) also contains, or contained at any time, a claim to a claimed invention that has an effective filing date on or after March 16, 2013.
NOTE: By providing this statement under 37 CFR 1.55 or 1.78, this application, with a filing date on or after March 16, 2013, will be examined under the first inventor to file provisions of the AIA.

Application Data Sheet 37 CFR 1.76	Attorney Docket Number	BIKN005C9
	Application Number	
Title of Invention	WIRELESS DEVICE AND METHODS FOR USE THEREWITH	

Authorization or Opt-Out of Authorization to Permit Access:

When this Application Data Sheet is properly signed and filed with the application, applicant has provided written authority to permit a participating foreign intellectual property (IP) office access to the instant application-as-filed (see paragraph A in subsection 1 below) and the European Patent Office (EPO) access to any search results from the instant application (see paragraph B in subsection 1 below).

Should applicant choose not to provide an authorization identified in subsection 1 below, applicant **must opt-out** of the authorization by checking the corresponding box A or B or both in subsection 2 below.

NOTE: This section of the Application Data Sheet is **ONLY** reviewed and processed with the **INITIAL** filing of an application. After the initial filing of an application, an Application Data Sheet cannot be used to provide or rescind authorization for access by a foreign IP office(s). Instead, Form PTO/SB/39 or PTO/SB/69 must be used as appropriate.

1. Authorization to Permit Access by a Foreign Intellectual Property Office(s)

A. Priority Document Exchange (PDX) - Unless box A in subsection 2 (opt-out of authorization) is checked, the undersigned hereby **grants the USPTO authority** to provide the European Patent Office (EPO), the Japan Patent Office (JPO), the Korean Intellectual Property Office (KIPO), the State Intellectual Property Office of the People's Republic of China (SIPO), the World Intellectual Property Organization (WIPO), and any other foreign intellectual property office participating with the USPTO in a bilateral or multilateral priority document exchange agreement in which a foreign application claiming priority to the instant patent application is filed, access to: (1) the instant patent application-as-filed and its related bibliographic data, (2) any foreign or domestic application to which priority or benefit is claimed by the instant application and its related bibliographic data, and (3) the date of filing of this Authorization. See 37 CFR 1.14(h)(1).

B. Search Results from U.S. Application to EPO - Unless box B in subsection 2 (opt-out of authorization) is checked, the undersigned hereby **grants the USPTO authority** to provide the EPO access to the bibliographic data and search results from the instant patent application when a European patent application claiming priority to the instant patent application is filed. See 37 CFR 1.14(h)(2).

The applicant is reminded that the EPO's Rule 141(1) EPC (European Patent Convention) requires applicants to submit a copy of search results from the instant application without delay in a European patent application that claims priority to the instant application.

2. Opt-Out of Authorizations to Permit Access by a Foreign Intellectual Property Office(s)

☐ A. Applicant **DOES NOT** authorize the USPTO to permit a participating foreign IP office access to the instant application-as-filed. If this box is checked, the USPTO will not be providing a participating foreign IP office with any documents and information identified in subsection 1A above.

☐ B. Applicant **DOES NOT** authorize the USPTO to transmit to the EPO any search results from the instant patent application. If this box is checked, the USPTO will not be providing the EPO with search results from the instant application.

NOTE: Once the application has published or is otherwise publicly available, the USPTO may provide access to the application in accordance with 37 CFR 1.14.

Under the Paperwork Reduction Act of 1995, no persons are required to respond to a collection of information unless it contains a valid OMB control number.

Application Data Sheet 37 CFR 1.76	Attorney Docket Number	BIKN005C9
	Application Number	
Title of Invention	WIRELESS DEVICE AND METHODS FOR USE THEREWITH	

Applicant Information:

Providing assignment information in this section does not substitute for compliance with any requirement of part 3 of Title 37 of CFR to have an assignment recorded by the Office.

Applicant 1 Remove

If the applicant is the inventor (or the remaining joint inventor or inventors under 37 CFR 1.45), this section should not be completed. The information to be provided in this section is the name and address of the legal representative who is the applicant under 37 CFR 1.43; or the name and address of the assignee, person to whom the inventor is under an obligation to assign the invention, or person who otherwise shows sufficient proprietary interest in the matter who is the applicant under 37 CFR 1.46. If the applicant is an applicant under 37 CFR 1.46 (assignee, person to whom the inventor is obligated to assign, or person who otherwise shows sufficient proprietary interest) together with one or more joint inventors, then the joint inventor or inventors who are also the applicant should be identified in this section.

Clear

● Assignee	Legal Representative under 35 U.S.C. 117	Joint Inventor
Person to whom the inventor is obligated to assign.	Person who shows sufficient proprietary interest	

If applicant is the legal representative, indicate the authority to file the patent application, the inventor is:

Name of the Deceased or Legally Incapacitated Inventor:

If the Applicant is an Organization check here. ☒

Organization Name	THL Holding Company, LLC		
Mailing Address Information For Applicant:			
Address 1	11044 Research Blvd, Suite D500		
Address 2			
City	Austin	**State/Province**	TX
Country	US	Postal Code	78759
Phone Number		Fax Number	
Email Address			

Additional Applicant Data may be generated within this form by selecting the Add button. Add

Assignee Information including Non-Applicant Assignee Information:

Providing assignment information in this section does not substitute for compliance with any requirement of part 3 of Title 37 of CFR to have an assignment recorded by the Office.

Application Data Sheet 37 CFR 1.76	Attorney Docket Number	BIKN005C9
	Application Number	
Title of Invention	WIRELESS DEVICE AND METHODS FOR USE THEREWITH	

Assignee 1

Complete this section if assignee information, including non-applicant assignee information, is desired to be included on the patent application publication. An assignee-applicant identified in the "Applicant Information" section will appear on the patent application publication as an applicant. For an assignee-applicant, complete this section only if identification as an assignee is also desired on the patent application publication.

Remove

If the Assignee or Non-Applicant Assignee is an Organization check here. ☒

Organization Name	THL Holding Company, LLC

Mailing Address Information For Assignee including Non-Applicant Assignee:

Address 1	11044 Research Blvd, Suite D500		
Address 2			
City	Austin	**State/Province**	TX
Country i	US	Postal Code	78759
Phone Number		Fax Number	
Email Address			

Additional Assignee or Non-Applicant Assignee Data may be generated within this form by selecting the Add button. Add

Signature:

Remove

NOTE: This Application Data Sheet must be signed in accordance with 37 CFR 1.33(b). **However, if this Application Data Sheet is submitted with the INITIAL filing of the application and either box A or B is not checked in subsection 2 of the "Authorization or Opt-Out of Authorization to Permit Access" section, then this form must also be signed in accordance with 37 CFR 1.14(c).**

This Application Data Sheet **must** be signed by a patent practitioner if one or more of the applicants is a **juristic entity** (e.g., corporation or association). If the applicant is two or more joint inventors, this form must be signed by a patent practitioner, **all** joint inventors who are the applicant, or one or more joint inventor-applicants who have been given power of attorney (e.g., see USPTO Form PTO/AIA/81) on behalf of **all** joint inventor-applicants.

See 37 CFR 1.4(d) for the manner of making signatures and certifications.

Signature	/Bruce Stuckman, Ph.D./			Date (YYYY-MM-DD)	2022-01-19
First Name	Bruce E.	Last Name	Stuckman, Ph.D.	Registration Number	36693

Additional Signature may be generated within this form by selecting the Add button. Add

PTO/AIA/14 (02-18)
Approved for use through 11/30/2020. OMB 0651-0032
U.S. Patent and Trademark Office; U.S. DEPARTMENT OF COMMERCE
Under the Paperwork Reduction Act of 1995, no persons are required to respond to a collection of information unless it contains a valid OMB control number.

Application Data Sheet 37 CFR 1.76	Attorney Docket Number	BIKN005C9
	Application Number	
Title of Invention	WIRELESS DEVICE AND METHODS FOR USE THEREWITH	

This collection of information is required by 37 CFR 1.76. The information is required to obtain or retain a benefit by the public which is to file (and by the USPTO to process) an application. Confidentiality is governed by 35 U.S.C. 122 and 37 CFR 1.14. This collection is estimated to take 23 minutes to complete, including gathering, preparing, and submitting the completed application data sheet form to the USPTO. Time will vary depending upon the individual case. Any comments on the amount of time you require to complete this form and/or suggestions for reducing this burden, should be sent to the Chief Information Officer, U.S. Patent and Trademark Office, U.S. Department of Commerce, P.O. Box 1450, Alexandria, VA 22313-1450. DO NOT SEND FEES OR COMPLETED FORMS TO THIS ADDRESS. **SEND TO: Commissioner for Patents, P.O. Box 1450, Alexandria, VA 22313-1450.**

Privacy Act Statement

The Privacy Act of 1974 (P.L. 93-579) requires that you be given certain information in connection with your submission of the attached form related to a patent application or patent. Accordingly, pursuant to the requirements of the Act, please be advised that: (1) the general authority for the collection of this information is 35 U.S.C. 2(b)(2); (2) furnishing of the information solicited is voluntary; and (3) the principal purpose for which the information is used by the U.S. Patent and Trademark Office is to process and/or examine your submission related to a patent application or patent. If you do not furnish the requested information, the U.S. Patent and Trademark Office may not be able to process and/or examine your submission, which may result in termination of proceedings or abandonment of the application or expiration of the patent.

The information provided by you in this form will be subject to the following routine uses:

1 The information on this form will be treated confidentially to the extent allowed under the Freedom of Information Act (5 U.S.C. 552) and the Privacy Act (5 U.S.C. 552a). Records from this system of records may be disclosed to the Department of Justice to determine whether the Freedom of Information Act requires disclosure of these records.

2. A record from this system of records may be disclosed, as a routine use, in the course of presenting evidence to a court, magistrate, or administrative tribunal, including disclosures to opposing counsel in the course of settlement negotiations.

3 A record in this system of records may be disclosed, as a routine use, to a Member of Congress submitting a request involving an individual, to whom the record pertains, when the individual has requested assistance from the Member with respect to the subject matter of the record.

4. A record in this system of records may be disclosed, as a routine use, to a contractor of the Agency having need for the information in order to perform a contract. Recipients of information shall be required to comply with the requirements of the Privacy Act of 1974, as amended, pursuant to 5 U.S.C. 552a(m).

5. A record related to an International Application filed under the Patent Cooperation Treaty in this system of records may be disclosed, as a routine use, to the International Bureau of the World Intellectual Property Organization, pursuant to the Patent CooperationTreaty.

6. A record in this system of records may be disclosed, as a routine use, to another federal agency for purposes of National Security review (35 U.S.C. 181) and for review pursuant to the Atomic Energy Act (42 U.S.C. 218(c)).

7. A record from this system of records may be disclosed, as a routine use, to the Administrator, General Services, or his/her designee, during an inspection of records conducted by GSA as part of that agency's responsibility to recommend improvements in records management practices and programs, under authority of 44 U.S.C. 2904 and 2906. Such disclosure shall be made in accordance with the GSA regulations governing inspection of records for this purpose, and any other relevant (i.e., GSA or Commerce) directive. Such disclosure shall not be used to make determinations about individuals.

8. A record from this system of records may be disclosed, as a routine use, to the public after either publication of the application pursuant to 35 U.S.C. 122(b) or issuance of a patent pursuant to 35 U.S.C. 151. Further, a record may be disclosed, subject to the limitations of 37 CFR 1.14, as a routine use, to the public if the record was filed in an application which became abandoned or in which the proceedings were terminated and which application is referenced by either a published application, an application open to public inspections or an issued patent.

9. A record from this system of records may be disclosed, as a routine use, to a Federal, State, or local law enforcement agency, if the USPTO becomes aware of a violation or potential violation of law or regulation.

UNITED STATES PATENT AND TRADEMARK OFFICE

UNITED STATES DEPARTMENT OF COMMERCE
United States Patent and Trademark Office
Address: COMMISSIONER FOR PATENTS
P.O. Box 1450
Alexandria, Virginia 22313-1450
www.uspto.gov

APPLICATION NUMBER	FILING or 371(c) DATE	GRP ART UNIT	FIL FEE REC'D	ATTY.DOCKET.NO	TOT CLAIMS	IND CLAIMS
17/578,676	01/19/2022	2656	1570	BIKN005C9	30	4

CONFIRMATION NO. 1996

FILING RECEIPT

34399
GARLICK & MARKISON
100 CONGRESS AVENUE
SUITE 2000
AUSTIN, TX 78701

OC000000131375500

Date Mailed: 01/27/2022

Receipt is acknowledged of this non-provisional utility patent application. The application will be taken up for examination in due course. Applicant will be notified as to the results of the examination. Any correspondence concerning the application must include the following identification information: the U.S. APPLICATION NUMBER, FILING DATE, NAME OF FIRST INVENTOR, and TITLE OF INVENTION. Fees transmitted by check or draft are subject to collection.

Please verify the accuracy of the data presented on this receipt. If an error is noted on this Filing Receipt, please submit a written request for a corrected Filing Receipt, including a properly marked-up ADS showing the changes with strike-through for deletions and underlining for additions. If you received a "Notice to File Missing Parts" or other Notice requiring a response for this application, please submit any request for correction to this Filing Receipt with your reply to the Notice. When the USPTO processes the reply to the Notice, the USPTO will generate another Filing Receipt incorporating the requested corrections provided that the request is grantable.

Inventor(s)

John W. Howard, Cedar Park, TX;
Richard Cutler, Round Rock, TX;
Robert M. Kennard, Dallas, TX;

Applicant(s)

THL Holding Company, LLC, Austin, TX;

Assignment For Published Patent Application

THL Holding Company, LLC, Austin, TX

Power of Attorney: The patent practitioners associated with Customer Number 34399

Domestic Priority data as claimed by applicant

This application is a CON of 17/036,535 09/29/2020
which is a CON of 16/837,481 04/01/2020 PAT 10834539
which is a CON of 16/540,665 08/14/2019 PAT 10645537
which is a CON of 16/150,498 10/03/2018 PAT 10440501
which is a CON of 15/910,654 03/02/2018 PAT 10123161
which is a CON of 15/000,903 01/19/2016 PAT 9942700
which is a CON of 14/281,077 05/19/2014 PAT 9295024
which is a CON of 14/044,202 10/02/2013 PAT 8768381
which is a CON of 12/713,346 02/26/2010 PAT 8588806

Foreign Applications for which priority is claimed (You may be eligible to benefit from the **Patent Prosecution Highway** program at the USPTO. Please see http://www.uspto.gov for more information.) - None.

Foreign application information must be provided in an Application Data Sheet in order to constitute a claim to foreign priority. See 37 CFR 1.55 and 1.76.

Permission to Access Application via Priority Document Exchange: Yes

Permission to Access Search Results: Yes

Applicant may provide or rescind an authorization for access using Form PTO/SB/39 or Form PTO/SB/69 as appropriate.

If Required, Foreign Filing License Granted: 01/26/2022
The country code and number of your priority application, to be used for filing abroad under the Paris Convention, is **US 17/578,676**
Projected Publication Date: 05/05/2022
Non-Publication Request: No
Early Publication Request: No
**** SMALL ENTITY ****
Title

WIRELESS DEVICE AND METHODS FOR USE THEREWITH

Preliminary Class

379

Statement under 37 CFR 1.55 or 1.78 for AIA (First Inventor to File) Transition Applications: No

PROTECTING YOUR INVENTION OUTSIDE THE UNITED STATES

Since the rights granted by a U.S. patent extend only throughout the territory of the United States and have no effect in a foreign country, an inventor who wishes patent protection in another country must apply for a patent in a specific country or in regional patent offices. Applicants may wish to consider the filing of an international application under the Patent Cooperation Treaty (PCT). An international (PCT) application generally has the same effect as a regular national patent application in each PCT-member country. The PCT process **simplifies** the filing of patent applications on the same invention in member countries, but **does not result** in a grant of "an international patent" and does not eliminate the need of applicants to file additional documents and fees in countries where patent protection is desired.

Almost every country has its own patent law, and a person desiring a patent in a particular country must make an application for patent in that country in accordance with its particular laws. Since the laws of many countries differ in various respects from the patent law of the United States, applicants are advised to seek guidance from specific foreign countries to ensure that patent rights are not lost prematurely.

Applicants also are advised that in the case of inventions made in the United States, the Director of the USPTO must issue a license before applicants can apply for a patent in a foreign country. The filing of a U.S. patent application serves as a request for a foreign filing license. The application's filing receipt contains further information and guidance as to the status of applicant's license for foreign filing.

Applicants may wish to consult the USPTO booklet, "General Information Concerning Patents" (specifically, the section entitled "Treaties and Foreign Patents") for more information on timeframes and deadlines for filing foreign

patent applications. The guide is available either by contacting the USPTO Contact Center at 800-786-9199, or it can be viewed on the USPTO website at http://www.uspto.gov/web/offices/pac/doc/general/index.html.

For information on preventing theft of your intellectual property (patents, trademarks and copyrights), you may wish to consult the U.S. Government website, http://www.stopfakes.gov. Part of a Department of Commerce initiative, this website includes self-help "toolkits" giving innovators guidance on how to protect intellectual property in specific countries such as China, Korea and Mexico. For questions regarding patent enforcement issues, applicants may call the U.S. Government hotline at 1-866-999-HALT (1-866-999-4258).

LICENSE FOR FOREIGN FILING UNDER

Title 35, United States Code, Section 184

Title 37, Code of Federal Regulations, 5.11 & 5.15

GRANTED

The applicant has been granted a license under 35 U.S.C. 184, if the phrase "IF REQUIRED, FOREIGN FILING LICENSE GRANTED" followed by a date appears on this form. Such licenses are issued in all applications where the conditions for issuance of a license have been met, regardless of whether or not a license may be required as set forth in 37 CFR 5.15. The scope and limitations of this license are set forth in 37 CFR 5.15(a) unless an earlier license has been issued under 37 CFR 5.15(b). The license is subject to revocation upon written notification. The date indicated is the effective date of the license, unless an earlier license of similar scope has been granted under 37 CFR 5.13 or 5.14.

This license is to be retained by the licensee and may be used at any time on or after the effective date thereof unless it is revoked. This license is automatically transferred to any related applications(s) filed under 37 CFR 1.53(d). This license is not retroactive.

The grant of a license does not in any way lessen the responsibility of a licensee for the security of the subject matter as imposed by any Government contract or the provisions of existing laws relating to espionage and the national security or the export of technical data. Licensees should apprise themselves of current regulations especially with respect to certain countries, of other agencies, particularly the Office of Defense Trade Controls, Department of State (with respect to Arms, Munitions and Implements of War (22 CFR 121-128)); the Bureau of Industry and Security, Department of Commerce (15 CFR parts 730-774); the Office of Foreign AssetsControl, Department of Treasury (31 CFR Parts 500+) and the Department of Energy.

NOT GRANTED

No license under 35 U.S.C. 184 has been granted at this time, if the phrase "IF REQUIRED, FOREIGN FILING LICENSE GRANTED" DOES NOT appear on this form. Applicant may still petition for a license under 37 CFR 5.12, if a license is desired before the expiration of 6 months from the filing date of the application. If 6 months has lapsed from the filing date of this application and the licensee has not received any indication of a secrecy order under 35 U.S.C. 181, the licensee may foreign file the application pursuant to 37 CFR 5.15(b).

SelectUSA

The United States represents the largest, most dynamic marketplace in the world and is an unparalleled location for business investment, innovation, and commercialization of new technologies. The U.S. offers tremendous resources and advantages for those who invest and manufacture goods here. Through SelectUSA, our nation works to promote and facilitate business investment. SelectUSA provides information assistance to the international investor community; serves as an ombudsman for existing and potential investors; advocates on behalf of U.S. cities, states, and regions competing for global investment; and counsels U.S. economic development organizations on investment attraction best practices. To learn more about why the United States is the best country in the world to develop technology, manufacture products, deliver services, and grow your business, visit http://www.SelectUSA.gov or call +1-202-482-6800.

PATENT APPLICATION FEE DETERMINATION RECORD Substitute for Form PTO-875	Application or Docket Number 17/578,676

APPLICATION AS FILED - PART I

FOR	(Column 1) NUMBER FILED	(Column 2) NUMBER EXTRA	SMALL ENTITY RATE($)	SMALL ENTITY FEE($)	OR	OTHER THAN SMALL ENTITY RATE($)	OTHER THAN SMALL ENTITY FEE($)
BASIC FEE (37 CFR 1.16(a), (b), or (c))	N/A	N/A	N/A	80		N/A	
SEARCH FEE (37 CFR 1.16(k), (i), or (m))	N/A	N/A	N/A	350		N/A	
EXAMINATION FEE (37 CFR 1.16(o), (p), or (q))	N/A	N/A	N/A	400		N/A	
TOTAL CLAIMS (37 CFR 1.16(i))	30 minus 20 =	* 10	x 50 =	500	OR		
INDEPENDENT CLAIMS (37 CFR 1.16(h))	4 minus 3 =	* 1	x 240 =	240			
APPLICATION SIZE FEE (37 CFR 1.16(s))	If the specification and drawings exceed 100 sheets of paper, the application size fee due is $310 ($155 for small entity) for each additional 50 sheets or fraction thereof. See 35 U.S.C. 41(a)(1)(G) and 37 CFR 1.16(s).			0.00			
MULTIPLE DEPENDENT CLAIM PRESENT (37 CFR 1.16(j))				0.00			
* If the difference in column 1 is less than zero, enter "0" in column 2.			TOTAL	1570		TOTAL	

APPLICATION AS AMENDED - PART II

		(Column 1) CLAIMS REMAINING AFTER AMENDMENT		(Column 2) HIGHEST NUMBER PREVIOUSLY PAID FOR	(Column 3) PRESENT EXTRA	SMALL ENTITY RATE($)	SMALL ENTITY ADDITIONAL FEE($)	OR	OTHER THAN SMALL ENTITY RATE($)	OTHER THAN SMALL ENTITY ADDITIONAL FEE($)
AMENDMENT A	Total (37 CFR 1.16(i))	*	Minus	**	=	x =		OR	x =	
AMENDMENT A	Independent (37 CFR 1.16(h))	*	Minus	***	=	x =		OR	x =	
AMENDMENT A	Application Size Fee (37 CFR 1.16(s))									
AMENDMENT A	FIRST PRESENTATION OF MULTIPLE DEPENDENT CLAIM (37 CFR 1.16(j))							OR		
						TOTAL ADD'L FEE		OR	TOTAL ADD'L FEE	

		(Column 1) CLAIMS REMAINING AFTER AMENDMENT		(Column 2) HIGHEST NUMBER PREVIOUSLY PAID FOR	(Column 3) PRESENT EXTRA	RATE($)	ADDITIONAL FEE($)	OR	RATE($)	ADDITIONAL FEE($)
AMENDMENT B	Total (37 CFR 1.16(i))	*	Minus	**	=	x =		OR	x =	
AMENDMENT B	Independent (37 CFR 1.16(h))	*	Minus	***	=	x =		OR	x =	
AMENDMENT B	Application Size Fee (37 CFR 1.16(s))									
AMENDMENT B	FIRST PRESENTATION OF MULTIPLE DEPENDENT CLAIM (37 CFR 1.16(j))							OR		
						TOTAL ADD'L FEE		OR	TOTAL ADD'L FEE	

* If the entry in column 1 is less than the entry in column 2, write "0" in column 3.
** If the "Highest Number Previously Paid For" IN THIS SPACE is less than 20, enter "20".
*** If the "Highest Number Previously Paid For" IN THIS SPACE is less than 3, enter "3".
The "Highest Number Previously Paid For" (Total or Independent) is the highest found in the appropriate box in column 1.

UNITED STATES PATENT AND TRADEMARK OFFICE

UNITED STATES DEPARTMENT OF COMMERCE
United States Patent and Trademark Office
Address: COMMISSIONER FOR PATENTS
P.O. Box 1450
Alexandria, Virginia 22313-1450
www.uspto.gov

APPLICATION NO.	FILING DATE	FIRST NAMED INVENTOR	ATTORNEY DOCKET NO.	CONFIRMATION NO.
17/578,676	01/19/2022	John W. Howard	BIKN005C9	1996

34399 7590 03/02/2022
GARLICK & MARKISON
100 CONGRESS AVENUE
SUITE 2000
AUSTIN, TX 78701

EXAMINER
CENTRAL, DOCKET

ART UNIT	PAPER NUMBER
2646	

NOTIFICATION DATE	DELIVERY MODE
03/02/2022	ELECTRONIC

Please find below and/or attached an Office communication concerning this application or proceeding.

The time period for reply, if any, is set in the attached communication.

Notice of the Office communication was sent electronically on above-indicated "Notification Date" to the following e-mail address(es):

MMurdock@TEXASPATENTS.COM
bpierotti@texaspatents.com

PTOL-90A (Rev. 04/07)

Decision Granting Request for Prioritized Examination (Track I)	**Application No.** 17/578,676	**Applicant(s)** Howard et al.	
	Examiner CHERYL P GIBSON BAYLOR	**Art Unit** OPET	**AIA (FITF) Status** No

1. THE REQUEST FILED 19 January 2022 IS **GRANTED** .

   The above-identified application has met the requirements for prioritized examination
   A. ☑ for an original nonprovisional application (Track I).
   B. ☐ for an application undergoing continued examination (RCE).

2. **The above-identified application will undergo prioritized examination**. The application will be accorded special status throughout its entire course of prosecution until one of the following occurs:

   A. filing a **petition for extension of time** to extend the time period for filing a reply;

   B. filing an **amendment to amend the application to contain more than four independent claims, more than thirty total claims** , or a multiple dependent claim;

   C. filing a **request for continued examination** ;

   D. filing a notice of appeal;

   E. filing a request for suspension of action;

   F. mailing of a notice of allowance;

   G. mailing of a final Office action;

   H. completion of examination as defined in 37 CFR 41.102; or

   I. abandonment of the application.

Telephone inquiries with regard to this decision should be directed to CHERYL GIBSON BAYLOR at (571)272-3213. In his/her absence, calls may be directed to Petition Help Desk at (571) 272-3282.

/CHERYL GIBSON BAYLOR/ Paralegal Specialist, OPET	

U.S. Patent and Trademark Office
PTO-2298 (Rev. 02-2012)

UNITED STATES PATENT AND TRADEMARK OFFICE

UNITED STATES DEPARTMENT OF COMMERCE
United States Patent and Trademark Office
Address: COMMISSIONER FOR PATENTS
P.O. Box 1450
Alexandria, Virginia 22313-1450
www.uspto.gov

APPLICATION NO.	FILING DATE	FIRST NAMED INVENTOR	ATTORNEY DOCKET NO.	CONFIRMATION NO.
17/578,676	01/19/2022	John W. Howard	BIKN005C9	1996

34399 7590 04/01/2022
GARLICK & MARKISON
100 CONGRESS AVENUE
SUITE 2000
AUSTIN, TX 78701

EXAMINER
TAYLOR, BARRY W

ART UNIT	PAPER NUMBER
2646	

NOTIFICATION DATE	DELIVERY MODE
04/01/2022	ELECTRONIC

Please find below and/or attached an Office communication concerning this application or proceeding.

The time period for reply, if any, is set in the attached communication.

Notice of the Office communication was sent electronically on above-indicated "Notification Date" to the following e-mail address(es):

MMurdock@TEXASPATENTS.COM
bpierotti@texaspatents.com

PTOL-90A (Rev. 04/07)

Office Action Summary	Application No. 17/578,676	Applicant(s) Howard et al.	
	Examiner BARRY W TAYLOR	Art Unit 2646	AIA (FITF) Status No

-- The MAILING DATE of this communication appears on the cover sheet with the correspondence address --

Period for Reply

A SHORTENED STATUTORY PERIOD FOR REPLY IS SET TO EXPIRE 3 MONTHS FROM THE MAILING DATE OF THIS COMMUNICATION.

- Extensions of time may be available under the provisions of 37 CFR 1.136(a). In no event, however, may a reply be timely filed after SIX (6) MONTHS from the mailing date of this communication.
- If NO period for reply is specified above, the maximum statutory period will apply and will expire SIX (6) MONTHS from the mailing date of this communication.
- Failure to reply within the set or extended period for reply will, by statute, cause the application to become ABANDONED (35 U.S.C. § 133). Any reply received by the Office later than three months after the mailing date of this communication, even if timely filed, may reduce any earned patent term adjustment. See 37 CFR 1.704(b).

Status

1)☐ Responsive to communication(s) filed on _____.

☐ A declaration(s)/affidavit(s) under **37 CFR 1.130(b)** was/were filed on _____.

2a)☐ This action is **FINAL.** 2b) ☑ This action is non-final.

3)☐ An election was made by the applicant in response to a restriction requirement set forth during the interview on _____; the restriction requirement and election have been incorporated into this action.

4)☐ Since this application is in condition for allowance except for formal matters, prosecution as to the merits is closed in accordance with the practice under *Ex parte Quayle*, 1935 C.D. 11, 453 O.G. 213.

Disposition of Claims*

5) ☑ Claim(s) 1-30 is/are pending in the application.

5a) Of the above claim(s) _____ is/are withdrawn from consideration.

6) ☑ Claim(s) 30 is/are allowed.

7) ☑ Claim(s) 1-29 is/are rejected.

8) ☐ Claim(s) _____ is/are objected to.

9) ☐ Claim(s) _____ are subject to restriction and/or election requirement

* If any claims have been determined allowable, you may be eligible to benefit from the **Patent Prosecution Highway** program at a participating intellectual property office for the corresponding application. For more information, please see http://www.uspto.gov/patents/init_events/pph/index.jsp or send an inquiry to **PPHfeedback@uspto.gov.**

Application Papers

10)☐ The specification is objected to by the Examiner.

11)☑ The drawing(s) filed on 19 Jan 2022 is/are: a)☑ accepted or b)☐ objected to by the Examiner.

Applicant may not request that any objection to the drawing(s) be held in abeyance. See 37 CFR 1.85(a).

Replacement drawing sheet(s) including the correction is required if the drawing(s) is objected to. See 37 CFR 1.121(d).

Priority under 35 U.S.C. § 119

12)☐ Acknowledgment is made of a claim for foreign priority under 35 U.S.C. § 119(a)-(d) or (f).

Certified copies:

a)☐ All b)☐ Some** c)☐ None of the:

1.☐ Certified copies of the priority documents have been received.

2.☐ Certified copies of the priority documents have been received in Application No. _____.

3.☐ Copies of the certified copies of the priority documents have been received in this National Stage application from the International Bureau (PCT Rule 17.2(a)).

** See the attached detailed Office action for a list of the certified copies not received.

Attachment(s)

1) ☑ Notice of References Cited (PTO-892)

2) ☑ Information Disclosure Statement(s) (PTO/SB/08a and/or PTO/SB/08b) Paper No(s)/Mail Date _____.

3) ☐ Interview Summary (PTO-413) Paper No(s)/Mail Date _____.

4) ☐ Other: _____.

DETAILED ACTION

Notice of Pre-AIA or AIA Status

The present application is being examined under the pre-AIA first to invent provisions.

Double Patenting

The nonstatutory double patenting rejection is based on a judicially created doctrine grounded in public policy (a policy reflected in the statute) so as to prevent the unjustified or improper timewise extension of the "right to exclude" granted by a patent and to prevent possible harassment by multiple assignees. A nonstatutory double patenting rejection is appropriate where the conflicting claims are not identical, but at least one examined application claim is not patentably distinct from the reference claim(s) because the examined application claim is either anticipated by, or would have been obvious over, the reference claim(s). See, e.g., *In re Berg*, 140 F.3d 1428, 46 USPQ2d 1226 (Fed. Cir. 1998); *In re Goodman*, 11 F.3d 1046, 29 USPQ2d 2010 (Fed. Cir. 1993); *In re Longi*, 759 F.2d 887, 225 USPQ 645 (Fed. Cir. 1985); *In re Van Ornum*, 686 F.2d 937, 214 USPQ 761 (CCPA 1982); *In re Vogel*, 422 F.2d 438, 164 USPQ 619 (CCPA 1970); *In re Thorington*, 418 F.2d 528, 163 USPQ 644 (CCPA 1969).

A timely filed terminal disclaimer in compliance with 37 CFR 1.321(c) or 1.321(d) may be used to overcome an actual or provisional rejection based on nonstatutory double patenting provided the reference application or patent either is shown to be commonly owned with the examined application, or claims an invention made as a result of activities undertaken within the scope of a joint research agreement. See MPEP § 717.02 for applications subject to examination under the first inventor to file

provisions of the AIA as explained in MPEP § 2159. See MPEP §§ 706.02(l)(1) - 706.02(l)(3) for applications not subject to examination under the first inventor to file provisions of the AIA. A terminal disclaimer must be signed in compliance with 37 CFR 1.321(b).

The USPTO Internet website contains terminal disclaimer forms which may be used. Please visit www.uspto.gov/patent/patents-forms. The filing date of the application in which the form is filed determines what form (e.g., PTO/SB/25, PTO/SB/26, PTO/AIA/25, or PTO/AIA/26) should be used. A web-based eTerminal Disclaimer may be filled out completely online using web-screens. An eTerminal Disclaimer that meets all requirements is auto-processed and approved immediately upon submission. For more information about eTerminal Disclaimers, refer to www.uspto.gov/patents/process/file/efs/guidance/eTD-info-I.jsp.

1. Claims 1-4 and 6 are rejected on the ground of nonstatutory double patenting as being unpatentable over claims 10-11 of U.S. Patent No: 11,265,680 in view of Karaoguz (2004/0233872) and Wheeler et al (2008/0062120).

Regarding claim 1. Claim 10 of U.S. Patent 11,265,680 recites all the elements of claim 1 of the instant application with the exception of “estimating distance using ultra-wideband and TOF calculations”.

Karaoguz teaches transmitting UWB pulses to a plurality of devices. Then the devices transmits UWB pulses back. Finally, ranging is then performed using a time duration of a round trip of the UWB pulses thereby determining relative precise positions of the devices (0020, 0093).

It would have been obvious for one of ordinary skill in the art at the time of the invention to modify claim 10 of U.S. Patent 10,834,539 to use UWB pulses as taught by Karaoguz in order to determine precise positions of devices.

U.S. Patent 11,256,680 in view of Karaoguz do not teach "using an arrow to visually assist the user in determining the location of at least one device".

Wheeler teaches an arrow is used on mom's phone enabling mom to quickly locate at least one remote device associated with a child (figure 4, 0040).

It would have been obvious for one of ordinary skill in the art at the time of the invention to modify U.S. Patent 11,256,680 use an arrow on a display as taught by Wheeler in order to enable the user to quickly find/track a nearby device.

Claim 2 of the instant application is met by claims 10 and 11 of U.S. Patent 11,256,680.

Regarding Claim 3. U.S. Patent 11,256,680 does not teach estimating the position of a remote device based on information received from a second device.

Karaoguz teaches transmitting UWB pulses to a plurality of devices. Then the devices transmits UWB pulses back. Finally, ranging is then performed using a time duration of a round trip of the UWB pulses thereby determining relative precise positions of the devices (0020 – this information, in conjunction with ranging information from a second device may be used to perform triangulation thereby determining the specific locations of the two devices).

It would have been obvious for one of ordinary skill in the art at the time of the invention to modify U.S. Patent 10,834,539 to use UWB pulse from a second device as taught by Karaoguz in order to determine the specific positions of devices.

Claim 4 of the instant application is met by claims 10 of U.S. Patent 11,256,680.

Claim 6 of the instant application is met by claim 10 of U.S. Patent 11,256,680.

2. Claims 5, and 7-19 are rejected on the ground of nonstatutory double patenting as being unpatentable over U.S. Patent No: 11,265,680 in view of Karaoguz and Wheeler further in view of Lee (2009/0270093).

Regarding claim 11. Claims 10 and 5 of U.S. Patent 11,265,680 recites all the elements of claim 11 of the instant application with the exception of "estimating distance using ultra-wideband and TOF calculations".

Karaoguz teaches transmitting UWB pulses to a plurality of devices. Then the devices transmits UWB pulses back. Finally, ranging is then performed using a time duration of a round trip of the UWB pulses thereby determining relative precise positions of the devices (0020, 0093).

It would have been obvious for one of ordinary skill in the art at the time of the invention to modify U.S. Patent 10,834,539 to use UWB pulses as taught by Karaoguz in order to determine precise positions of devices.

U.S. Patent 11,256,680 in view of Karaoguz do not teach "using an arrow to pointing in the direction of the at least one remote device".

Wheeler teaches an arrow is used on mom's phone enabling mom to quickly locate at least one remote device associated with a child (figure 4, 0040).

It would have been obvious for one of ordinary skill in the art at the time of the invention to modify U.S. Patent 11,256,680 use an arrow on a display as taught by Wheeler in order to enable the user to quickly find/track a nearby device.

U.S. Patent 11,256,680 in view of Karaoguz and Wheeler do not teach **orientation sensor.**

Lee teaches an **orientation sensor** (figure 1, item 140) to detect orientation or acceleration of the wireless device (0038). Lee teaches displaying distance and direction of the paired devices (0091). Displays wireless devices on the pairing list according to each type based on each distance or signal strength. In addition, display 2D or 3D (0105-0106, 0119). Figures 9B, 9C and 9D and 0109-0110 – display paired device(s) according to direction and power levels and can also display the names of the paired devices (0111, 0116). For example, figures 9B-9D show an area 1 can be for wireless devices within 1m, the area 2 can be for wireless devices within 2m, and the area 3 can be for devices within 3m. Thus, the user can easily see the names and locations of the wireless devices, and select a particular device (0117). Lee teaches the user can set a Range Setting for Ultra-Wideband pairing (0033). For example, the user selects the range 1m and ONLY the devices within 1M are display for the user to select (figures 6A-6B, 0091-0099) and the other devices outside the range of 1M are not displayed (e.g., not paired).

It would have been obvious for one of ordinary skill in the art at the time of the invention to modify U.S. Patent 10,834,539 in view of Karaoguz and Wheeler to display direction, distances and names for a plurality of wireless devices as taught by Lee thus, the user can easily see the names, locations and/or directions of the wireless devices, and select a particular device.

Regarding Claims 5 and 18 of the instant application. U.S. Patent 11,256,680 in view of Karaoguz and Wheeler do not teach wherein the second device is not paired with the at least one remote device.

Lee teaches the user can set a Range Setting for Ultra-Wideband pairing (0033). For example, the user selects the range 1m and ONLY the devices within 1M are display for the user to select (figures 6A-6B, 0091-0099) and the other devices outside the range of 1M are not displayed (e.g., not paired).

It would have been obvious for one of ordinary skill in the art at the time of the invention to modify U.S. Patent 10,834,539 in view of Karaoguz and Wheeler to provide the user with an option to select a pairing range as taught by Lee thereby saving on battery power (Lee at 0094).

Regarding claims 7 and 12. U.S. Patent 11,256,680 teaches at least one remote device includes a plurality of remote devices and wherein the operational instructions further cause the processor to (i) output to the touch screen a representation of the plurality of devices (see claim 10 – interaction with the touchscreen to select at least one remote from a plurality of remote devices), (ii) receive user input from the touchscreen selecting one of the plurality of remote devices (see claim 10 – interaction with the touchscreen to select at least one remote from a plurality of remote devices) but does not teach, and (iii) output to the touchscreen the estimated distances to the selected one of the plurality of remote devices and the direction to the selected one of the plurality of remote devices.

Lee teaches displaying distance and direction of the paired devices (0091). Displays wireless devices on the pairing list according to each type based on each

distance or signal strength. In addition, display 2D or 3D (0105-0106, 0119). Figures 9B, 9C and 9D and 0109-0110 – display paired device(s) according to direction and power levels and can also display the names of the paired devices (0111, 0116). For example, figures 9B-9D show an area 1 can be for wireless devices within 1m, the area 2 can be for wireless devices within 2m, and the area 3 can be for devices within 3m. Thus, the user can easily see the names and locations of the wireless devices, and select a particular device (0117). Lee teaches the user can set a Range Setting for Ultra-Wideband pairing (0033). For example, the user selects the range 1m and ONLY the devices within 1M are display for the user to select (figures 6A-6B, 0091-0099) and the other devices outside the range of 1M are not displayed (e.g., not paired).

It would have been obvious for one of ordinary skill in the art at the time of the invention to modify U.S. Patent 10,834,539 in view of Karaoguz and Wheeler to display direction and distances for a plurality of wireless devices as taught by Lee thus, the user can easily see the names and locations of the wireless devices, and select a particular device.

Regarding claims 8 and 13. U.S. Patent 11,256,680 in view of Karaoguz and Wheeler do not teach displaying names for one or more of the plurality of devices.

Lee teaches displaying distance and direction of the paired devices (0091). Displays wireless devices on the pairing list according to each type based on each distance or signal strength. In addition, display 2D or 3D (0105-0106, 0119). Figures 9B, 9C and 9D and 0109-0110 – display paired device(s) according to direction and power levels and can also display the names of the paired devices (0111, 0116). For example, figures 9B-9D show an area 1 can be for wireless devices within 1m, the area

2 can be for wireless devices within 2m, and the area 3 can be for devices within 3m. Thus, the user can easily see the names and locations of the wireless devices, and select a particular device (0117). Lee teaches the user can set a Range Setting for Ultra-Wideband pairing (0033). For example, the user selects the range 1m and ONLY the devices within 1M are display for the user to select (figures 6A-6B, 0091-0099) and the other devices outside the range of 1M are not displayed (e.g., not paired).

It would have been obvious for one of ordinary skill in the art at the time of the invention to modify U.S. Patent 10,834,539 in view of Karaoguz and Wheeler to display direction, distances **and names** for a plurality of wireless devices as taught by Lee thus, the user can easily see the names and locations of the wireless devices, and select a particular device.

Regarding claim 9. U.S. Patent 11,256,680 in view of Karaoguz and Wheeler do not teach orientation sensor.

Lee teaches an **orientation sensor** (figure 1, item 140) to detect orientation or acceleration of the wireless device (0038). Lee teaches displaying distance and direction of the paired devices (0091). Displays wireless devices on the pairing list according to each type based on each distance or signal strength. In addition, display 2D or 3D (0105-0106, 0119). Figures 9B, 9C and 9D and 0109-0110 – display paired device(s) according to direction and power levels and can also display the names of the paired devices (0111, 0116). For example, figures 9B-9D show an area 1 can be for wireless devices within 1m, the area 2 can be for wireless devices within 2m, and the area 3 can be for devices within 3m. Thus, the user can easily see the names and locations of the wireless devices, and select a particular device (0117). Lee teaches the

user can set a Range Setting for Ultra-Wideband pairing (0033). For example, the user selects the range 1m and ONLY the devices within 1M are display for the user to select (figures 6A-6B, 0091-0099) and the other devices outside the range of 1M are not displayed (e.g., not paired).

It would have been obvious for one of ordinary skill in the art at the time of the invention to modify U.S. Patent 10,834,539 in view of Karaoguz and Wheeler to display direction, distances and names for a plurality of wireless devices as taught by Lee thus, the user can easily see the names, locations and/or directions of the wireless devices, and select a particular device.

Claims 10 and 14 of the instant application is met by claim 11 of U.S. Patent 11,256,680.

Claim 15 of the instant application is met by claims 10 and 11 of U.S. Patent 11,256,680.

Regarding Claim 16 of the instant application. U.S. Patent 11,256,680 does not teach estimating the position of a remote device based on information received from a second device.

Karaoguz teaches transmitting UWB pulses to a plurality of devices. Then the devices transmits UWB pulses back. Finally, ranging is then performed using a time duration of a round trip of the UWB pulses thereby determining relative precise positions of the devices (0020 – this information, in conjunction with ranging information from a second device may be used to perform triangulation thereby determining the specific locations of the two devices).

It would have been obvious for one of ordinary skill in the art at the time of the invention to modify claim 10 of U.S. Patent 10,834,539 to use UWB pulse from a second device as taught by Karaoguz in order to determine the specific positions of devices.

Claim 17 of the instant application is met by claims 10 of U.S. Patent 11,256,680.

Claim 19 of the instant application is met by claim 10 of U.S. Patent 11,256,680.

3. Claims 20-29 are rejected on the ground of nonstatutory double patenting as being unpatentable over U.S. Patent No: 11,265,680 in view of Wheeler et al (2008/0062120) and Lee (2009/0270093).

Regarding claim 20. Claims 10 and 5 of U.S. Patent 11,265,680 recites all the elements of claim 20 of the instant application with the exception of "using Bluetooth to determine range between a selected device and display on map".

Wheeler teaches an arrow is used on mom's phone enabling mom to quickly locate at least one remote device associated with a child on a map (figure 4, 0040-0041) using Bluetooth (0009, 0011, 0024, 0027, see claim 6).

It would have been obvious for one of ordinary skill in the art at the time of the invention to modify claim 10 of U.S. Patent 11,256,680 use Bluetooth and map overlay as taught by Wheeler in order to enable the user to quickly find/track a nearby device.

U.S. Patent 11,265,680 in view of Wheeler do not teach displaying a name associated with each of the remote devices.

Lee teaches displaying distance and direction of the paired devices (0091). Displays wireless devices on the pairing list according to each type based on each distance or signal strength. In addition, display 2D or 3D (0105-0106, 0119). Figures

9B, 9C and 9D and 0109-0110 – display paired device(s) according to direction and power levels and can also display the names of the paired devices (0111, 0116). For example, figures 9B-9D show an area 1 can be for wireless devices within 1m, the area 2 can be for wireless devices within 2m, and the area 3 can be for devices within 3m. Thus, the user can easily see the names and locations of the wireless devices, and select a particular device (0117). Lee teaches the user can set a Range Setting for Ultra-Wideband pairing (0033). For example, the user selects the range 1m and ONLY the devices within 1M are display for the user to select (figures 6A-6B, 0091-0099) and the other devices outside the range of 1M are not displayed (e.g., not paired).

It would have been obvious for one of ordinary skill in the art at the time of the invention to modify U.S. Patent 10,834,539 in view of Karaoguz and Wheeler to display direction, distances **and names** for a plurality of wireless devices as taught by Lee thus, the user can easily see the names and locations of the wireless devices, and select a particular device.

Claim 21 of the instant application is met by claims 10 and 11 of U.S. Patent 11,256,680.

Regarding claim 22. U.S. Patent 11,265,680 teaches wherein the information is received from a second mobile communication device (claim 10 – received from at least one remote device).

Claim 23 of the instant application is met by claims 15 or 16 of U.S. Patent 11,256,680.

Regarding claim 24. U.S. Patent 11,265,680 does not teach using GPS.

Wheeler teaches an arrow is used on mom's phone enabling mom to quickly locate at least one remote device associated with a child on a map (figure 4, 0040-0041) using Bluetooth (0009, 0011, 0024, 0027, see claim 6) and/or GPS (abstract, 0010, figure 4, 0039).

Lee teaches displaying distance and direction of the paired devices (0091) in conjunction with GPS data (0089, 0034).

It would have been obvious for one of ordinary skill in the art at the time of the invention to modify U.S. Patent 11,256,680 use GPS as taught by Wheeler or Lee in order to enable the user to more accurately find/track a nearby device.

Claim 25 of the instant application is met by claims 10 of U.S. Patent 11,256,680.

Regarding claim 26. U.S. Patent 11,256,680 in view of Wheeler do not teach wherein the second device is not paired with the at least one remote device.

Lee teaches the user can set a Range Setting for Ultra-Wideband pairing (0033). For example, the user selects the range 1m and ONLY the devices within 1M are display for the user to select (figures 6A-6B, 0091-0099) and the other devices outside the range of 1M are not displayed (e.g., not paired).

It would have been obvious for one of ordinary skill in the art at the time of the invention to modify U.S. Patent 10,834,539 in view of Wheeler to provide the user with an option to select a pairing range as taught by Lee thereby saving on battery power (Lee at 0094).

Claim 27 is met by claim 11 of U.S. Patent 11,256,680.

Regarding claim 28. U.S. Patent 11,256,680 in view of Wheeler do not teach wherein the distance to the selected remote device is determined base on at least three distance ranges.

Lee teaches at least three distance ranges (figure 6A – first is 1m, second is 3m and the third can be no limit). Lee teaches displaying distance and direction of the paired devices (0091). Displays wireless devices on the pairing list according to each type based on each distance or signal strength. In addition, display 2D or 3D (0105-0106, 0119). Figures 9B, 9C and 9D and 0109-0110 – display paired device(s) according to direction and power levels and can also display the names of the paired devices (0111, 0116). For example, figures 9B-9D show an area 1 can be for wireless devices within 1m, the area 2 can be for wireless devices within 2m, and the area 3 can be for devices within 3m. Thus, the user can easily see the names and locations of the wireless devices, and select a particular device (0117). Lee teaches the user can set a Range Setting for Ultra-Wideband pairing (0033). For example, the user selects the range 1m and ONLY the devices within 1M are display for the user to select (figures 6A-6B, 0091-0099) and the other devices outside the range of 1M are not displayed (e.g., not paired).

It would have been obvious for one of ordinary skill in the art at the time of the invention to modify U.S. Patent 10,834,539 in view of Wheeler to display direction, distances (e.g., according to 1m, 2m or maximum distance) for a plurality of wireless devices as taught by Lee thus, the user can easily see the names and locations of the wireless devices, and select a particular device.

Regarding claim 29. U.S. Patent 11,256,680 in view of Wheeler do not teach wherein the three distance ranges include long-range, short-range and midrange.

Lee teaches at least three distance ranges (**figure 6A – first is 1m, second is 3m and the third can be no limit which are clearly a design choice**). Lee teaches displaying distance and direction of the paired devices (0091). Displays wireless devices on the pairing list according to each type based on each distance or signal strength. In addition, display 2D or 3D (0105-0106, 0119). Figures 9B, 9C and 9D and 0109-0110 – display paired device(s) according to direction and power levels and can also display the names of the paired devices (0111, 0116). For example, figures 9B-9D show an area 1 can be for wireless devices within 1m, the area 2 can be for wireless devices within 2m, and the area 3 can be for devices within 3m. Thus, the user can easily see the names and locations of the wireless devices, and select a particular device (0117). Lee teaches the user can set a Range Setting for Ultra-Wideband pairing (0033). For example, the user selects the range 1m and ONLY the devices within 1M are display for the user to select (figures 6A-6B, 0091-0099) and the other devices outside the range of 1M are not displayed (e.g., not paired).

It would have been obvious for one of ordinary skill in the art at the time of the invention to modify U.S. Patent 10,834,539 in view of Wheeler to display direction, distances (e.g., according to 1m, 2m or maximum distance) for a plurality of wireless devices as taught by Lee thus, the user can easily see the names and locations of the wireless devices, and select a particular device.

Allowable Subject Matter

4. Claim 30 is allowed.

Conclusion

5. The prior art made of record and not relied upon is considered pertinent to applicant's disclosure.

---(5,379,447) Bonta et al teaches determining distance between devices by using round-trip signal delays (col. 3 lines 8-15).

6. Any inquiry concerning this communication or earlier communications from the examiner should be directed to BARRY W TAYLOR whose telephone number is (571)272-7509. The examiner can normally be reached on Monday-Thursday: 7-5.

Examiner interviews are available via telephone, in-person, and video conferencing using a USPTO supplied web-based collaboration tool. To schedule an interview, applicant is encouraged to use the USPTO Automated Interview Request (AIR) at http://www.uspto.gov/interviewpractice.

If attempts to reach the examiner by telephone are unsuccessful, the examiner's supervisor, Lester Kincaid can be reached on 571-272-7922. The fax phone number for the organization where this application or proceeding is assigned is 571-273-8300.

Information regarding the status of an application may be obtained from the Patent Application Information Retrieval (PAIR) system. Status information for published applications may be obtained from either Private PAIR or Public PAIR. Status information for unpublished applications is available through Private PAIR only. For more information about the PAIR system, see http://pair-direct.uspto.gov. Should you have questions on access to the Private PAIR system, contact the Electronic Business Center (EBC) at 866-217-9197 (toll-free). If you would like assistance from a USPTO Customer Service Representative or access to the automated information system, call 800-786-9199 (IN USA OR CANADA) or 571-272-1000.

/BARRY W TAYLOR/
Primary Examiner, Art Unit 2646

Notice of References Cited	Application/Control No. 17/578,676	Applicant(s)/Patent Under Reexamination Howard et al.	
	Examiner BARRY W TAYLOR	Art Unit 2646	Page 1 of 1

U.S. PATENT DOCUMENTS

*		Document Number Country Code-Number-Kind Code	Date MM-YYYY	Name	CPC Classification	US Classification
*	A	US-5379447-A	01-1995	Bonta; Jeffrey D.	H04W36/30	455/437
*	B	US-20040233972-A1	11-2004	Karaoguz, Jeyhan	H04B1/719	375/141
*	C	US-20080062120-A1	03-2008	Wheeler; Lorraine	G08B25/016	345/156
*	D	US-20090270093-A1	10-2009	LEE; Dong-Hyun	H04L67/16	455/434
	E					
	F					
	G					
	H					
	I					
	J					
	K					
	L					
	M					

FOREIGN PATENT DOCUMENTS

*		Document Number Country Code-Number-Kind Code	Date MM-YYYY	Country	Name	CPC Classification
	N					
	O					
	P					
	Q					
	R					
	S					
	T					

NON-PATENT DOCUMENTS

*		Include as applicable: Author, Title Date, Publisher, Edition or Volume, Pertinent Pages)
	U	
	V	
	W	
	X	

*A copy of this reference is not being furnished with this Office action. (See MPEP § 707.05(a).)
Dates in MM-YYYY format are publication dates. Classifications may be US or foreign.

Index of Claims	Application/Control No.	Applicant(s)/Patent Under Reexamination
	17/578,676	Howard et al.
	Examiner	**Art Unit**
	BARRY W TAYLOR	2646

✓	Rejected	-	Cancelled	N	Non-Elected	A	Appeal
=	Allowed	÷	Restricted	I	Interference	O	Objected

CLAIMS

☐ Claims renumbered in the same order as presented by applicant ☐ CPA ☐ T.D. ☐ R.1.47

CLAIM		DATE								
Final	Original	03/22/2022								
	1	✓								
	2	✓								
	3	✓								
	4	✓								
	5	✓								
	6	✓								
	7	✓								
	8	✓								
	9	✓								
	10	✓								
	11	✓								
	12	✓								
	13	✓								
	14	✓								
	15	✓								
	16	✓								
	17	✓								
	18	✓								
	19	✓								
	20	✓								
	21	✓								
	22	✓								
	23	✓								
	24	✓								
	25	✓								
	26	✓								
	27	✓								
	28	✓								
	29	✓								
	30	=								

Search Notes	Application/Control No.	Applicant(s)/Patent Under Reexamination
	17/578,676	Howard et al.
	Examiner	**Art Unit**
	BARRY W TAYLOR	2646

CPC - Searched*		
Symbol	**Date**	**Examiner**
H04W 4/ 029, 024, 80, 02	03/22/2022	BWT
H04W 64/00	03/22/2022	BWT
G08B 21/0269, 0272, 0277	03/22/2022	BWT

CPC Combination Sets - Searched*		
Symbol	**Date**	**Examiner**

US Classification - Searched*			
Class	**Subclass**	**Date**	**Examiner**

* See search history printout included with this form or the SEARCH NOTES box below to determine the scope of the search.

Search Notes		
Search Notes	**Date**	**Examiner**
updated search for parent applicaions. google scholar, global dossier and Palmn inventor name.	03/22/2022	BWT

Interference Search			
US Class/CPC Symbol	**US Subclass/CPC Group**	**Date**	**Examiner**

/BARRY W TAYLOR/ Primary Examiner, Art Unit 2646	

IPR2024-00400
Apple EX1002 Page 154

Experimental results from an **ultra wideband** precision geolocation system
RJ Fontana - Ultra-Wideband, Short-Pulse Electromagnetics 5, 2002 - Springer
... **Ultra wideband** waveforms can achieve extremely fine, ... An **ultra wideband** (UWB) based system has been described which ... **time**-of-**flight** measurement ambiguities to **determine position**...
Save Cite Cited by 91 Related articles All 5 versions

Commercialization of an **ultra wideband** precision asset **location** system
RJ Fontana, E Richley... - ... on Ultra Wideband ..., 2003 - ieeexplore.ieee.org
... One problem that is unique to asset tracking systems is that, in order to accurately **determine** tag **position**, a minimum number of receivers (typically three) must have a direct line-of-sight ...
Save Cite Cited by 401 Related articles All 2 versions

Ultra-wideband for navigation and communications
JC Adams, W Gregorwich, L Capots... - 2001 IEEE Aerospace ..., 2001 - ieeexplore.ieee.org
... Formation **flying** of multiple spacecraft is an enabling technology for many future ... **determine** relative vehicle **position** and orientation will play an important role. We define formation **flying** ...
Save Cite Cited by 123 Related articles All 5 versions

Polypoint: Guiding indoor quadrotors with **ultra-wideband** localization
B Kempke, P Pannuto, P Dutta - ... of the 2nd International Workshop on ..., 2015 - dl.acm.org
... uses one-way **time**-of-**flight** measurements to derive range estimates between a mobile tag and fixed-**location** infrastructure (anchors) to **determine** a tag's **position**. By collecting range ...
Save Cite Cited by 72 Related articles All 9 versions

Rapid automated monitoring of construction site activities using **ultra-wideband**
J Teizer, D Lao, M Sofer - ... of the 24th International Symposium on ..., 2007 - researchgate.net
... technology called **Ultra Wide Band** (UWB) for real-**time location** sensing ... industry in **determining** the **location** and trajectories of ... the applicability of **Ultra Wide Band** for construction and in ...
Save Cite Cited by 150 Related articles

Ultra-wideband aiding of GPS for quick deployment of anchors in a GPS-denied ad-hoc sensor tracking and communication system
J Johnson, B Dewberry - Proceedings of the 24th International Technical ..., 2011 - ion.org
... The landmark nodes again use GPS only to **determine** their initial **locations** followed by the use of UWB range measurements between landmarks. In this manner all information ...
Save Cite Cited by 78 Related articles All 4 versions

Accurate and platform-agnostic **time**-of-**flight** estimation in **ultra-wide band**
F Despaux, K Jaffres-Runser... - 2016 IEEE 27th ..., 2016 - ieeexplore.ieee.org
... for systems in which the **position** information should be kept ... to **determine** the impact of the antenna's **position** over the ToF. ... An original correction method for indoor **ultra wide band** ...
Save Cite Cited by 18 Related articles All 5 versions

Ultra-wideband-based localization for quadcopter navigation
K Guo, Z Qiu, C Miao, AH Zaini, CL Chen... - Unmanned ..., 2016 - World Scientific
... coordinates to uniquely **determine** the target **position** in a 3D space. Denote the known ... **flight** controller on-board. By default, it is connected to the GPS module for the absolute **position**...
Save Cite Cited by 105 Related articles All 2 versions

Ultra-wideband radar methods and techniques of medical sensing and imaging
CN Paulson, JT Chang, CE Romero... - Smart Medical and ..., 2005 - spiedigitallibrary.org
... A single UWB ranging sensor can provide **position** and motion information in one ... cannot **determine** the target angle. If two sensors are used, it is possible to **determine** the **position** of a ...
Save Cite Cited by 81 Related articles All 8 versions

Indoor positioning using **Ultra-wide band** (UWB) technologies: Positioning accuracies and sensors' performances

P Dabove, V Di Pietra, M Piras... - ... Position, Location ..., 2018 - ieeexplore.ieee.org

... **Ultrawideband** (UWB) indoor positioning commercial system is presented which exploits two-way **time** of **flight** (... It is very hard to **determine** the peak of a wide pulse accurately; moreover ...

☆ Save 99 Cite Cited by 60 Related articles All 2 versions

Bibliographic Data

Application No: 17/578,676

Foreign Priority claimed: ○ Yes ◉ No

35 USC 119 (a-d) conditions met: ☑ Yes ☐ No ☐ Met After Allowance

Verified and Acknowledged: /BARRY W TAYLOR/ (Examiner's Signature) BWT (Initials)

Title: WIRELESS DEVICE AND METHODS FOR USE THEREWITH

FILING or 371(c) DATE	CLASS	GROUP ART UNIT	ATTORNEY DOCKET NO.
01/19/2022	455	2646	BIKN005C9
RULE			

APPLICANTS

THL Holding Company, LLC, Austin, TX,

INVENTORS

John W. Howard, Cedar Park, TX, UNITED STATES

Richard Cutler, Round Rock, TX, UNITED STATES

Robert M. Kennard, Dallas, TX, UNITED STATES

CONTINUING DATA

This application is a CON of 17036535 09/29/2020 PAT 11265680

17036535 is a CON of 16837481 04/01/2020 PAT 10834539

16837481 is a CON of 16540665 08/14/2019 PAT 10645537

16540665 is a CON of 16150498 10/03/2018 PAT 10440501

16150498 is a CON of 15910654 03/02/2018 PAT 10123161

15910654 is a CON of 15000903 01/19/2016 PAT 9942700

15000903 is a CON of 14281077 05/19/2014 PAT 9295024

14281077 is a CON of 14044202 10/02/2013 PAT 8768381

14044202 is a CON of 12713346 02/26/2010 PAT 8588806

FOREIGN APPLICATIONS

IF REQUIRED, FOREIGN LICENSE GRANTED**

01/26/2022

**** SMALL ENTITY ****

STATE OR COUNTRY

UNITED STATES

ADDRESS

GARLICK & MARKISON

100 CONGRESS AVENUE
SUITE 2000
AUSTIN, TX 78701
UNITED STATES

FILING FEE RECEIVED

$3,740

PE2E SEARCH - Search History (Prior Art)

Ref #	Hits	Search Query	DBs	Default Operator	Plurals	British Equivalents	Time Stamp
L1	1	"8354878"	(US-PGPUB; USPAT)	OR	ON	ON	2017/02/08 07:40 PM
L2	12	"8254878"	(US-PGPUB; USPAT)	OR	ON	ON	2017/02/08 07:40 PM
L3	11	"8588806"	(US-PGPUB; USPAT)	OR	ON	ON	2017/02/08 07:52 PM
L4	1	"8588806".pn.	(US-PGPUB; USPAT)	OR	ON	ON	2017/02/08 07:52 PM
L5	1	L4 and pair$5	(US-PGPUB; USPAT)	OR	ON	ON	2017/02/08 07:52 PM
L6	1	"20160227362"	(US-PGPUB; USPAT)	OR	ON	ON	2017/08/09 03:06 PM
L7	1	L6 and (plac$4 adj3 order)	(US-PGPUB; USPAT)	OR	ON	ON	2017/08/09 03:06 PM
L8	1	"9295024".pn.	(US-PGPUB; USPAT)	OR	ON	ON	2017/08/09 03:07 PM
L9	1	L8 and (plac$4 adj3 order)	(US-PGPUB; USPAT)	OR	ON	ON	2017/08/09 03:07 PM
L10	1	"8768381".pn.	(US-PGPUB; USPAT)	OR	ON	ON	2017/08/09 03:07 PM
L11	1	L10 and (plac$4 adj3 order)	(US-PGPUB; USPAT)	OR	ON	ON	2017/08/09 03:07 PM
L12	1	"8588806".pn.	(US-PGPUB; USPAT)	OR	ON	ON	2017/08/09 03:08 PM
L13	1	L12 and (plac$4 adj3 order)	(US-PGPUB; USPAT)	OR	ON	ON	2017/08/09 03:08 PM
L14	3	"9295024"	(US-PGPUB; USPAT)	OR	ON	ON	2017/08/09 03:14 PM
L15	0	("9295024").URPN.	(USPAT)	OR	ON	ON	2017/08/09 03:14 PM
L16	81	("20020103008" | "20030052860" | "20030162574" | "20030193399" | "20040097127" | "20040125080" | "20040167820" | "20040204074" | "20050186968" | "20050231361" | "20060012488" | "20060152487" | "20060152488" | "20060152489" | "20060154642" | "20060259942" | "20070005840" | "20070013526" |	(US-PGPUB; USPAT; USOCR)	OR	ON	ON	2017/08/09 03:14 PM

		"20070021148" | "20070038785" | "20070052177" | "20070060228" | "20070060384" | "20070066394" | "20070080933" | "20070130592" | "20070136264" | "20070279245" | "20080001814" | "20080012824" | "20080032713" | "20080052750" | "20080062120" | "20080166968" | "20080278445" | "20090217335" | "20090237209" | "20090284664" | "20110210849" | "20110210959" | "20110212699" | "20110212702" | "20120077439" | "4476469" | "5146231" | "5343136" | "5448261" | "5497339" | "5545857" | "5675524" | "5714932" | "5752205" | "5857148" | "5857157" | "6067018" | "6172640" | "6286060" | "6446127" | "6624752" | "6625472" | "6774787" | "6889057" | "6980546" | "7034684" | "7110789" | "7266391" | "7453357" | "7647511" | "7690994" | "7843427" | "7912503" | "8000647" | "8018726" | "8078787" | "8253559" | "8253560" | "8254878" | "8285248" | "8422954" | "8588806" | "8750928").PN.					
L17	84	L14 or L16	(US-PGPUB; USPAT)	OR	ON	ON	2017/08/09 03:14 PM
L18	8	"8768381"	(US-PGPUB; USPAT)	OR	ON	ON	2017/08/09 03:15 PM
L19	1	("8588806").PN.	(US-PGPUB; USPAT; USOCR)	OR	ON	ON	2017/08/09 03:15 PM
L20	89	L17 or L18	(US-PGPUB; USPAT)	OR	ON	ON	2017/08/09 03:16 PM
L21	1	"8588806".pn.	(US-PGPUB; USPAT)	OR	ON	ON	2017/08/09 03:16 PM
L22	28	("20050186968" |	(US-PGPUB; USPAT;	OR	ON	ON	2017/08/09

		"20050231361" | "20060012488" | "20060152487" | "20060152488" | "20060152489" | "20060154642" | "20070013526" | "20070052177" | "20070060228" | "20070060384" | "20070066394" | "20080012824" | "20080032713" | "20080052750" | "20080166968" | "20080278445" | "20090217335" | "20090237209" | "20090284664" | "20110210849" | "4476469" | "5146231" | "6889057" | "7110789" | "7690994" | "8000647" | "8078787").PN.	USOCR)				03:16 PM
L23	12	"8588806"	(US-PGPUB; USPAT)	OR	ON	ON	2017/08/09 03:16 PM
L24	93	L20 or L22 or L23	(US-PGPUB; USPAT)	OR	ON	ON	2017/08/09 03:17 PM
L25	75	L24 and order	(US-PGPUB; USPAT)	OR	ON	ON	2017/08/09 03:17 PM
L26	19	L24 and (plac$4 adj2 order)	(US-PGPUB; USPAT)	OR	ON	ON	2017/08/09 03:17 PM
L27	1	L6 and (plac$4 adj3 order)	(US-PGPUB; USPAT)	OR	ON	ON	2017/08/09 03:36 PM
L28	1	L6 and (download$4)	(US-PGPUB; USPAT)	OR	ON	ON	2017/08/09 03:39 PM
L29	1	L6 and (attach$4 near7 object)	(US-PGPUB; USPAT)	OR	ON	ON	2017/08/09 03:41 PM
L30	1	L6 and (housing)	(US-PGPUB; USPAT)	OR	ON	ON	2017/08/09 03:43 PM
L31	0	L6 and (housing same opening)	(US-PGPUB; USPAT)	OR	ON	ON	2017/08/09 03:46 PM
L32	1	L6 and (attach$6)	(US-PGPUB; USPAT)	OR	ON	ON	2017/08/09 03:47 PM
L33	1	L6 and (light)	(US-PGPUB; USPAT)	OR	ON	ON	2017/08/09 03:49 PM
L34	1	L6 and (touch adj2 screen)	(US-PGPUB; USPAT)	OR	ON	ON	2017/08/09 04:34 PM
L35	1	L6 and (display)	(US-PGPUB; USPAT)	OR	ON	ON	2017/08/09 04:38 PM
L36	1	"8588506".pn.	(US-PGPUB; USPAT)	OR	ON	ON	2017/08/09 04:56 PM
L37	21	L24 and (thumb adj2	(US-PGPUB; USPAT)	OR	ON	ON	2017/08/09

		wheel)					05:28 PM
L38	48	L24 and (pair$4)	(US-PGPUB; USPAT)	OR	ON	ON	2017/08/09 05:52 PM
L39	4	("20060035205" | "20080040502" | "20080272905" | "5956696").PN.	(US-PGPUB; USPAT; USOCR)	OR	ON	ON	2017/08/09 05:57 PM
L40	1	"20160227362".pn.	(US-PGPUB; USPAT; USOCR)	OR	ON	ON	2017/08/09 06:07 PM
L41	1	L40 and pair$5	(US-PGPUB; USPAT; USOCR)	OR	ON	ON	2017/08/09 06:07 PM
L42	1	"8254878".pn.	(US-PGPUB; USPAT; USOCR)	OR	ON	ON	2017/08/09 06:20 PM
L43	1	"8253559".pn.	(US-PGPUB; USPAT; USOCR)	OR	ON	ON	2017/08/09 06:21 PM
L44	15	"8253560"	(US-PGPUB; USPAT; USOCR)	OR	ON	ON	2017/08/09 06:21 PM
L45	7	"8285248"	(US-PGPUB; USPAT; USOCR)	OR	ON	ON	2017/08/09 06:24 PM
L46	3	"8422954"	(US-PGPUB; USPAT; USOCR)	OR	ON	ON	2017/08/09 06:27 PM
L47	1	L6 and (generat$5 adj2 pair$4 adj2 signal)	(US-PGPUB; USPAT; USOCR)	OR	ON	ON	2017/08/09 06:37 PM
L48	2932	(generat$5 adj2 pair$4 adj2 signal)	(US-PGPUB; USPAT; USOCR)	OR	ON	ON	2017/08/09 06:39 PM
L49	1	L6 and (order)	(US-PGPUB; USPAT)	OR	ON	ON	2017/08/09 06:44 PM
L50	71	restaurant same (paging adj2 device)	(US-PGPUB; USPAT)	OR	ON	ON	2017/08/09 06:46 PM
L51	70	L50 and (@ad<="20100226" or @rlad<="20100226" or @pd<="20100226")	(US-PGPUB; USPAT)	OR	ON	ON	2017/08/09 06:46 PM
L52	4	("20060035205" | "20080040502" | "20080272905" | "5956696").PN.	(US-PGPUB; USPAT; USOCR)	OR	ON	ON	2017/08/09 07:25 PM
L53	0	L48 same pager	(US-PGPUB; USPAT)	OR	ON	ON	2017/08/09 07:27 PM
L54	9	(pair$4 adj2 signal) same pager	(US-PGPUB; USPAT; USOCR)	OR	ON	ON	2017/08/09 07:27 PM
L55	1243	(pair$4 same pager)	(US-PGPUB; USPAT; USOCR)	OR	ON	ON	2017/08/09 07:28 PM
L56	98	L55 and restaurant	(US-PGPUB; USPAT; USOCR)	OR	ON	ON	2017/08/09 07:29 PM
L57	80	L56 and (@ad<="20100226" or @rlad<="20100226" or @pd<="20100226")	(US-PGPUB; USPAT)	OR	ON	ON	2017/08/09 07:29 PM
L58	993	L55 and (@ad<="20100226" or	(US-PGPUB; USPAT)	OR	ON	ON	2017/08/09 07:33 PM

		@rlad<="20100226" or @pd<="20100226")					
L59	114	(pair$4 near7 pager$1)	(US-PGPUB; USPAT; USOCR)	OR	ON	ON	2017/08/09 07:33 PM
L60	100	L59 and (@ad<="20100226" or @rlad<="20100226" or @pd<="20100226")	(US-PGPUB; USPAT)	OR	ON	ON	2017/08/09 07:33 PM
L61	1	"20160227362"	(US-PGPUB; USPAT)	OR	ON	ON	2017/08/10 06:48 AM
L62	1	L61 and (pairing near3 signal$1)	(US-PGPUB; USPAT)	OR	ON	ON	2017/08/10 06:49 AM
L63	1	L61 and (pair$5)	(US-PGPUB; USPAT)	OR	ON	ON	2017/08/10 06:52 AM
L64	1	L61 and (short-range or (short adj2 range))	(US-PGPUB; USPAT)	OR	ON	ON	2017/08/10 07:14 AM
L65	8	(US-20070080933-$ or US-20110081866-$ or US-20080094185-$ or US-20050065851-$ or US-20030088469-$).did. or (US-8078787-$ or US-8174359-$ or US-6681109-$).did.	(US-PGPUB; USPAT)	OR	ON	ON	2017/08/10 07:21 AM
L66	3	L65 and (pair$5 or sync$9)	(US-PGPUB; USPAT)	OR	ON	ON	2017/08/10 07:21 AM
L67	2	"20080320190"	(US-PGPUB; USPAT)	OR	ON	ON	2017/08/10 07:25 AM
L68	9	(US-20070080933-$ or US-20110081866-$ or US-20080094185-$ or US-20050065851-$ or US-20030088469-$ or US-20080320190-$).did. or (US-8078787-$ or US-8174359-$ or US-6681109-$).did.	(US-PGPUB; USPAT)	OR	ON	ON	2017/08/10 07:25 AM
L69	6	L68 and (pair$5 or sync$6 or blu or bluetooth$4)	(US-PGPUB; USPAT)	OR	ON	ON	2017/08/10 07:26 AM
L70	255	((blu or bluetooth$4) near3 pair$4) same ((press$4 or hold$4) near3 button)	(US-PGPUB; USPAT)	OR	ON	ON	2017/08/10 07:39 AM
L71	105	L70 and (@ad<="20100226" or @rlad<="20100226" or @pd<="20100226")	(US-PGPUB; USPAT)	OR	ON	ON	2017/08/10 07:40 AM
L72	6	L71 and restaurant	(US-PGPUB; USPAT)	OR	ON	ON	2017/08/10 07:40 AM
L73	0	L71 and "20080320190"	(US-PGPUB; USPAT)	OR	ON	ON	2017/08/10 07:46 AM
L74	492	((blu or bluetooth$4)	(US-PGPUB; USPAT)	OR	ON	ON	2017/08/10

		near3 pair$4) same (((press$4 or hold$4) near3 button) or (prompt$4 near3 user))					07:48 AM
L75	558	((blu or bluetooth$4) near3 pair$4) same (((press$4 or hold$4) near3 button) or ((prompt$4 or quer$5 or ask$4) near3 user))	(US-PGPUB; USPAT)	OR	ON	ON	2017/08/10 07:48 AM
L76	187	L75 and (@ad<="20100226" or @rlad<="20100226" or @pd<="20100226")	(US-PGPUB; USPAT)	OR	ON	ON	2017/08/10 07:48 AM
L77	14	L76 and (restaurant or (plac$4 adj2 order) or waitress)	(US-PGPUB; USPAT)	OR	ON	ON	2017/08/10 07:50 AM
L78	2	L75 and "20080320190"	(US-PGPUB; USPAT)	OR	ON	ON	2017/08/10 07:53 AM
L79	708	((blu or bluetooth$4) near7 pair$4) same (((press$4 or hold$4) near3 button) or ((prompt$4 or quer$5 or ask$4) near3 user))	(US-PGPUB; USPAT)	OR	ON	ON	2017/08/10 07:55 AM
L80	54	L79 and (restaurant or (plac$4 adj2 order) or waitress)	(US-PGPUB; USPAT)	OR	ON	ON	2017/08/10 07:55 AM
L81	243	L79 and (@ad<="20100226" or @rlad<="20100226" or @pd<="20100226")	(US-PGPUB; USPAT)	OR	ON	ON	2017/08/10 07:56 AM
L82	15	L81 and (restaurant or (plac$4 adj2 order) or waitress)	(US-PGPUB; USPAT)	OR	ON	ON	2017/08/10 07:57 AM
L83	1	"20090074951".pn.	(US-PGPUB; USPAT)	OR	ON	ON	2017/08/10 08:05 AM
L84	1	L83 and (position or location or gps or latitude)	(US-PGPUB; USPAT)	OR	ON	ON	2017/08/10 08:05 AM
L85	2	"20090074051"	(US-PGPUB; USPAT)	OR	ON	ON	2017/08/10 08:05 AM
L86	2	L85 and (position or location or gps or latitude)	(US-PGPUB; USPAT)	OR	ON	ON	2017/08/10 08:05 AM
L87	2	L85 and (headset)	(US-PGPUB; USPAT)	OR	ON	ON	2017/08/10 08:08 AM
L88	2	L85 and (display)	(US-PGPUB; USPAT)	OR	ON	ON	2017/08/10 08:08 AM
L89	2	L85 and (headset)	(US-PGPUB; USPAT)	OR	ON	ON	2017/08/10 08:10 AM
L90	1	"20160227362"	(US-PGPUB; USPAT)	OR	ON	ON	2017/08/10 08:16 AM

L91	46348	(G08B13/1427 OR G08B21/0244 OR G08B21/0247 OR G08B21/0269 OR G08B21/0272 OR G08B21/0277 OR G08B25/016 OR H04L41/0618 OR H04W4/008 OR H04W4/02 OR H04W4/20 OR H04W64/00).CPC.	(US-PGPUB; USPAT)	OR	ON	ON	2017/08/10 08:23 AM
L92	1	"20040167820"	(US-PGPUB; USPAT)	OR	ON	ON	2017/08/10 09:49 AM
L93	1	L92 and order$5	(US-PGPUB; USPAT)	OR	ON	ON	2017/08/10 09:50 AM
L94	1	"20090240814"	(US-PGPUB; USPAT)	OR	ON	ON	2017/08/10 10:31 AM
L95	1	L94 and (pda or pager)	(US-PGPUB; USPAT)	OR	ON	ON	2017/08/10 10:31 AM
L96	1	"20160227362"	(US-PGPUB; USPAT)	OR	ON	ON	2017/08/10 10:35 AM
L97	1	L96 and (down or download$5)	(US-PGPUB; USPAT)	OR	ON	ON	2017/08/10 10:36 AM
L98	8170	(select$5 near7 (app or application$1) near7 (download$4 or (down adj2 load$4)))	(US-PGPUB; USPAT)	OR	ON	ON	2017/08/10 10:38 AM
L99	14	(US-20070080933-$ or US-20110081866-$ or US-20080094185-$ or US-20050065851-$ or US-20030088469-$ or US-20080320190-$ or US-20090074051-$ or US-20070141989-$ or US-20090270036-$ or US-20090240814-$ or US-20090058663-$).did. or (US-8078787-$ or US-8174359-$ or US-6681109-$).did.	(US-PGPUB; USPAT)	OR	ON	ON	2017/08/10 10:38 AM
L100	0	L98 and L99	(US-PGPUB; USPAT)	OR	ON	ON	2017/08/10 10:38 AM
L101	3797	L98 and (@ad<="20100226" or @rlad<="20100226" or @pd<="20100226")	(US-PGPUB; USPAT)	OR	ON	ON	2017/08/10 10:38 AM
L102	8670	((blu or bluetooth$4 or wifi or wi-fi or (blude adj2 tooth)) near3 pair$4)	(US-PGPUB; USPAT)	OR	ON	ON	2017/08/10 10:39 AM
L103	12096	((blu or bluetooth$4 or wifi or wi-fi or (blude	(US-PGPUB; USPAT)	OR	ON	ON	2017/08/10 10:39 AM

		adj2 tooth)) near7 pair$4)					
L104	96	L101 and L103	(US-PGPUB; USPAT)	OR	ON	ON	2017/08/10 10:40 AM
L105	16	(US-20070080933-$ or US-20110081866-$ or US-20080094185-$ or US-20050065851-$ or US-20030088469-$ or US-20080320190-$ or US-20090074051-$ or US-20070141989-$ or US-20090270036-$ or US-20090240814-$ or US-20090058663-$ or US-20090249247-$ or US-20070080934-$).did. or (US-8078787-$ or US-8174359-$ or US-6681109-$).did.	(US-PGPUB; USPAT)	OR	ON	ON	2017/08/10 10:54 AM
L106	9	L105 and (attach$5 or clip$5 or ring$5 or fastener)	(US-PGPUB; USPAT)	OR	ON	ON	2017/08/10 10:54 AM
L107	1	L105 and "20070080933"	(US-PGPUB; USPAT)	OR	ON	ON	2017/08/10 11:01 AM
L108	780	(pager and ((form adj2 factor) same (attached or clipped or ring)))	(US-PGPUB; USPAT)	OR	ON	ON	2017/08/10 11:04 AM
L109	10	L103 and L108	(US-PGPUB; USPAT)	OR	ON	ON	2017/08/10 11:05 AM
L110	5014	(pager same (attached or clipped or ring))	(US-PGPUB; USPAT)	OR	ON	ON	2017/08/10 11:05 AM
L111	60	L103 and L110	(US-PGPUB; USPAT)	OR	ON	ON	2017/08/10 11:06 AM
L112	49	L111 and (@ad<="20100226" or @rlad<="20100226" or @pd<="20100226")	(US-PGPUB; USPAT)	OR	ON	ON	2017/08/10 11:06 AM
L113	1146	(pager same (keychain or keyring or (key adj2 (ring or chain))))	(US-PGPUB; USPAT)	OR	ON	ON	2017/08/10 11:16 AM
L114	31	L103 and L113	(US-PGPUB; USPAT)	OR	ON	ON	2017/08/10 11:17 AM
L115	41	L103 same (keychain or keyring or (key adj2 (ring or chain)))	(US-PGPUB; USPAT)	OR	ON	ON	2017/08/10 11:18 AM
L116	28	L115 and (@ad<="20100226" or @rlad<="20100226" or @pd<="20100226")	(US-PGPUB; USPAT)	OR	ON	ON	2017/08/10 11:18 AM
L117	18	(US-20070080933-$ or US-20110081866-$ or US-20080094185-$ or	(US-PGPUB; USPAT)	OR	ON	ON	2017/08/10 11:26 AM

		US-20050065851-$ or US-20030088469-$ or US-20080320190-$ or US-20090074051-$ or US-20070141989-$ or US-20090270036-$ or US-20090240814-$ or US-20090058663-$ or US-20090249247-$ or US-20070080934-$ or US-20110215921-$ or US-20060199538-$).did. or (US-8078787-$ or US-8174359-$ or US-6681109-$).did.					
L118	1	L117 and ((led or light or (light adj2 emitting adj2 diode)) same (push adj2 button$1))	(US-PGPUB; USPAT)	OR	ON	ON	2017/08/10 11:27 AM
L119	1	"20160227362"	(US-PGPUB; USPAT)	OR	ON	ON	2017/08/10 01:14 PM
L120	1	L119 and (pair$5 same (remote adj4 device))	(US-PGPUB; USPAT)	OR	ON	ON	2017/08/10 01:15 PM
L121	1	L119 and (paging adj2 device)	(US-PGPUB; USPAT)	OR	ON	ON	2017/08/10 01:48 PM
L122	1	L119 and (attach$5 or opening)	(US-PGPUB; USPAT)	OR	ON	ON	2017/08/10 01:51 PM
L123	1	"20090240814"	(US-PGPUB; USPAT)	OR	ON	ON	2017/08/10 02:40 PM
L124	0	L123 and transceiver	(US-PGPUB; USPAT)	OR	ON	ON	2017/08/10 02:40 PM
L125	1	"20040167820".pn.	(US-PGPUB; USPAT)	OR	ON	ON	2017/08/10 03:33 PM
L126	1	L125 and (phone or cell or cellular or smartphone)	(US-PGPUB; USPAT)	OR	ON	ON	2017/08/10 03:33 PM
L127	18	(US-20070080933-$ or US-20110081866-$ or US-20080094185-$ or US-20050065851-$ or US-20030088469-$ or US-20080320190-$ or US-20090074051-$ or US-20070141989-$ or US-20090270036-$ or US-20090240814-$ or US-20090058663-$ or US-20090249247-$ or US-20070080934-$ or US-20110215921-$ or US-20060199538-$).did. or (US-8078787-$ or US-8174359-$ or US-6681109-$).did.	(US-PGPUB; USPAT)	OR	ON	ON	2017/08/10 04:09 PM

L128	4	L127 and (form adj2 factor)	(US-PGPUB; USPAT)	OR	ON	ON	2017/08/10 04:09 PM
L129	3	L128 and (pair$5 or bluetooth$5)	(US-PGPUB; USPAT)	OR	ON	ON	2017/08/10 04:20 PM
L130	2	L127 and (button same led)	(US-PGPUB; USPAT)	OR	ON	ON	2017/08/10 04:36 PM
L131	0	"9942700"	(US-PGPUB; USPAT)	OR	ON	ON	2018/03/30 01:34 PM
L132	0	"9942700"	(US-PGPUB; USPAT)	OR	ON	ON	2018/03/30 01:34 PM
L133	40600	(G08B13/1427 OR G08B21/0244 OR G08B21/0247 OR G08B21/0269 OR G08B21/0272 OR G08B21/0277 OR G08B25/016 OR H04L41/0618 OR H04W4/008 OR H04W4/02 OR H04W4/20 OR H04W64/00).CPC.	(US-PGPUB; USPAT)	OR	ON	ON	2018/07/02 10:27 AM
L134	7	L133 and (((blu or bluetooth$4 or wifi or wi-fi or (blude adj2 tooth)) near7 pair$4) same (keychain or keyring or (key adj2 (ring or chain))))	(US-PGPUB; USPAT)	OR	ON	ON	2018/07/02 10:29 AM
L135	0	"10123161"	(US-PGPUB; USPAT)	OR	ON	ON	2018/10/29 11:14 AM
L136	0	"10123161".pn.	(US-PGPUB; USPAT)	OR	ON	ON	2018/10/29 11:14 AM
L137	18	(US-20070080933-$ or US-20110081866-$ or US-20080094185-$ or US-20050065851-$ or US-20030088469-$ or US-20080320190-$ or US-20090074051-$ or US-20070141989-$ or US-20090270036-$ or US-20090240814-$ or US-20090058663-$ or US-20090249247-$ or US-20070080934-$ or US-20110215921-$ or US-20060199538-$).did. or (US-8078787-$ or US-8174359-$ or US-6681109-$).did.	(US-PGPUB; USPAT)	OR	ON	ON	2019/03/07 12:45 PM
L138	1	L137 and (web$5 adj3 server)	(US-PGPUB; USPAT)	OR	ON	ON	2019/03/07 12:46 PM
L139	10	L137 and (server)	(US-PGPUB; USPAT)	OR	ON	ON	2019/03/07

							12:47 PM
L140	1	L137 and (download$5 same server)	(US-PGPUB; USPAT)	OR	ON	ON	2019/03/07 12:47 PM
L141	1	"20050065851"	(US-PGPUB; USPAT)	OR	ON	ON	2019/03/07 12:57 PM
L142	0	L141 and distance	(US-PGPUB; USPAT)	OR	ON	ON	2019/03/07 12:57 PM
L143	1	L141 and (location or position)	(US-PGPUB; USPAT)	OR	ON	ON	2019/03/07 12:57 PM
L144	0	"200190037340"	(US-PGPUB; USPAT)	OR	ON	ON	2019/03/07 01:13 PM
L145	1	"20190037340"	(US-PGPUB; USPAT)	OR	ON	ON	2019/03/07 01:13 PM
L146	46702	(G08B13/1427 OR H04W4/02 OR H04W4/80).CPC.	(US-PGPUB; USPAT)	OR	ON	ON	2019/03/07 01:16 PM
L147	2	"20180192236"	(US-PGPUB; USPAT)	OR	ON	ON	2019/03/07 01:22 PM
L148	1	"20050065851"	(US-PGPUB; USPAT)	OR	ON	ON	2019/03/07 01:30 PM
L149	27	"2005/0065851"	(US-PGPUB; USPAT)	OR	ON	ON	2019/03/07 01:31 PM
L150	1	"20190037340"	(US-PGPUB; USPAT)	OR	ON	ON	2019/05/13 07:17 PM
L151	43748	(G08B13/1427 OR G08B21/0244 OR G08B21/0247 OR G08B21/0269 OR G08B21/0272 OR G08B21/0277 OR G08B25/016 OR H04L41/0618 OR H04W4/008 OR H04W4/02 OR H04W4/20 OR H04W64/00).CPC.	(US-PGPUB; USPAT)	OR	ON	ON	2019/05/13 07:18 PM
L152	6	L151 and (((blu or bluetooth$4 or wifi or wi-fi or (blude adj2 tooth)) near7 pair$4) same (keychain or keyring or (key adj2 (ring or chain))))	(US-PGPUB; USPAT)	OR	ON	ON	2019/05/13 07:18 PM
L153	6	L151 and (((blu or bluetooth$4 or wifi or wi-fi or (blue adj2 tooth)) near7 pair$4) same (keychain or keyring or (key adj2 (ring or chain))))	(US-PGPUB; USPAT)	OR	ON	ON	2019/05/13 07:18 PM
L154	47862	(G08B13/1427 OR G08B21/0244 OR G08B21/0247 OR	(US-PGPUB; USPAT)	OR	ON	ON	2019/08/29 08:44 AM

		G08B21/0269 OR G08B21/0272 OR G08B21/0277 OR G08B25/016 OR H04L41/0618 OR H04W4/80 OR H04W4/02 OR H04W4/20 OR H04W64/00).CPC.					
L155	899	((blu or bluetooth$4) near3 pair$4) same (((press$4 or hold$4) near3 button) or ((prompt$4 or quer$5 or ask$4) near3 user))	(US-PGPUB; USPAT)	OR	ON	ON	2019/08/29 08:44 AM
L156	18761	((blu or bluetooth$4 or wifi or wi-fi or (blue adj2 tooth)) near7 pair$4)	(US-PGPUB; USPAT)	OR	ON	ON	2019/08/29 08:45 AM
L157	3849	L154 and L156	(US-PGPUB; USPAT)	OR	ON	ON	2019/08/29 08:46 AM
L158	18	L154 and (((blu or bluetooth$4 or wifi or wi-fi or (blue adj2 tooth)) near7 pair$4) same (keychain or keyring or (key adj2 (ring or chain))))	(US-PGPUB; USPAT)	OR	ON	ON	2019/08/29 08:46 AM
L159	2	L158 and (@ad<="20100226" or @rlad<="20100226" or @pd<="20100226")	(US-PGPUB; USPAT)	OR	ON	ON	2019/08/29 08:47 AM
L160	377	L157 and (@ad<="20100226" or @rlad<="20100226" or @pd<="20100226")	(US-PGPUB; USPAT)	OR	ON	ON	2019/08/29 08:48 AM
L161	17	L160 and (web adj2 server)	(US-PGPUB; USPAT)	OR	ON	ON	2019/08/29 08:48 AM
L162	1	"20190373418"	(US-PGPUB; USPAT)	OR	ON	ON	2019/12/09 09:29 AM
L163	66198	(G08B13/1427 OR G08B21/0244 OR G08B21/0247 OR G08B21/0269 OR G08B21/0272 OR G08B21/0277 OR G08B25/016 OR H04L41/0618 OR H04W4/024 OR H04W4/029 OR H04W4/80 OR H04W64/00).CPC.	(US-PGPUB; USPAT)	OR	ON	ON	2019/12/09 09:30 AM
L164	19	L163 and (((blu or bluetooth$4 or wifi or wi-fi or (blude adj2 tooth)) near7 pair$4)	(US-PGPUB; USPAT)	OR	ON	ON	2019/12/09 09:32 AM

		same (keychain or keyring or (key adj2 (ring or chain))))					
L165	3	L164 and (@ad<="20100226" or @rlad<="20100226" or @pd<="20100226")	(US-PGPUB; USPAT)	OR	ON	ON	2019/12/09 09:33 AM
L166	10665	(select$5 near7 (app or application) near7 (download$4 or (down adj2 load$4)))	(US-PGPUB; USPAT)	OR	ON	ON	2019/12/09 09:35 AM
L167	4030	L166 and (@ad<="20100226" or @rlad<="20100226" or @pd<="20100226")	(US-PGPUB; USPAT)	OR	ON	ON	2019/12/09 09:36 AM
L168	19745	((blu or bluetooth$4 or wifi or wi-fi or (blue adj2 tooth)) near7 pair$4)	(US-PGPUB; USPAT)	OR	ON	ON	2019/12/09 09:37 AM
L169	107	L167 and L168	(US-PGPUB; USPAT)	OR	ON	ON	2019/12/09 09:37 AM
L170	107	L169 and (distance or location or locate or find)	(US-PGPUB; USPAT)	OR	ON	ON	2019/12/09 09:38 AM
L171	10	L169 and ((paged or paging or page or probe) same (distance or location or locate or find))	(US-PGPUB; USPAT)	OR	ON	ON	2019/12/09 09:39 AM
L172	25	"8254878"	(US-PGPUB; USPAT)	OR	ON	ON	2020/06/29 04:39 PM
L173	0	"8254878"".pn.",	(US-PGPUB; USPAT)	OR	ON	ON	2020/06/29 04:39 PM
L174	0	"8254878"".pn."	(US-PGPUB; USPAT)	OR	ON	ON	2020/06/29 04:39 PM
L175	1	"8254878".pn.	(US-PGPUB; USPAT)	OR	ON	ON	2020/06/29 04:39 PM
L176	17	L172 and (emit$5 or sound or alert$5 or audible or audio).clm.	(US-PGPUB; USPAT)	OR	ON	ON	2020/06/29 04:43 PM
L177	120	"8253559"	(US-PGPUB; USPAT)	OR	ON	ON	2020/06/29 04:47 PM
L178	1	"8253559".pn.	(US-PGPUB; USPAT)	OR	ON	ON	2020/06/29 04:47 PM
L179	1	L178 and (emit$5 or sound or alert$5 or audible or audio).clm.	(US-PGPUB; USPAT)	OR	ON	ON	2020/06/29 04:47 PM
L180	25	L177 and (emit$5 or sound or alert$5 or audible or audio).clm.	(US-PGPUB; USPAT)	OR	ON	ON	2020/06/29 04:50 PM
L181	25	"8253560"	(US-PGPUB; USPAT)	OR	ON	ON	2020/06/29 04:53 PM
L182	1	"8253560".pn.	(US-PGPUB; USPAT)	OR	ON	ON	2020/06/29

							04:54 PM
L183	1	L182 and (emit$5 or sound or alert$5 or audible or audio).clm.	(US-PGPUB; USPAT)	OR	ON	ON	2020/06/29 04:54 PM
L184	20	L181 and (emit$5 or sound or alert$5 or audible or audio).clm.	(US-PGPUB; USPAT)	OR	ON	ON	2020/06/29 04:56 PM
L185	18	(US-20070080933-$ or US-20110081866-$ or US-20080094185-$ or US-20050065851-$ or US-20030088469-$ or US-20080320190-$ or US-20090074051-$ or US-20070141989-$ or US-20090270036-$ or US-20090240814-$ or US-20090058663-$ or US-20090249247-$ or US-20070080934-$ or US-20110215921-$ or US-20060199538-$).did. or (US-8078787-$ or US-8174359-$ or US-6681109-$).did.	(US-PGPUB; USPAT)	OR	ON	ON	2020/06/29 05:01 PM
L186	16	L185 and (emit$5 or sound or alert$5 or audible or audio)	(US-PGPUB; USPAT)	OR	ON	ON	2020/06/29 05:01 PM
L187	14	"8285248"	(US-PGPUB; USPAT)	OR	ON	ON	2020/06/29 05:32 PM
L188	1	"8285248".pn.	(US-PGPUB; USPAT)	OR	ON	ON	2020/06/29 05:33 PM
L189	1	L188 and (emit$5 or sound or alert$5 or audible or audio)	(US-PGPUB; USPAT)	OR	ON	ON	2020/06/29 05:33 PM
L190	0	L188 and (emit$5 or sound or alert$5 or audible or audio).clm.	(US-PGPUB; USPAT)	OR	ON	ON	2020/06/29 05:33 PM
L191	14	L187 and (emit$5 or sound or alert$5 or audible or audio)	(US-PGPUB; USPAT)	OR	ON	ON	2020/06/29 05:34 PM
L192	6	"8422954"	(US-PGPUB; USPAT)	OR	ON	ON	2020/06/29 05:35 PM
L193	1	"8422954".pn.	(US-PGPUB; USPAT)	OR	ON	ON	2020/06/29 05:35 PM
L194	1	L193 and (emit$5 or sound or alert$5 or audible or audio)	(US-PGPUB; USPAT)	OR	ON	ON	2020/06/29 05:35 PM
L195	0	L193 and (emit$5 or sound or alert$5 or audible or audio).clm.	(US-PGPUB; USPAT)	OR	ON	ON	2020/06/29 05:36 PM
L196	5	L192 and (emit$5 or sound or alert$5 or	(US-PGPUB; USPAT)	OR	ON	ON	2020/06/29 05:36 PM

		audible or audio)					
L197	2	"12713350"	(US-PGPUB; USPAT)	OR	ON	ON	2020/06/29 05:39 PM
L198	2	"20110210959"	(US-PGPUB; USPAT)	OR	ON	ON	2020/06/29 05:40 PM
L199	2	L198 and (emit$5 or sound or alert$5 or audible or audio).clm.	(US-PGPUB; USPAT)	OR	ON	ON	2020/06/29 05:40 PM
L200	20	"2011/0210959"	(US-PGPUB; USPAT)	OR	ON	ON	2020/06/29 05:41 PM
L201	20	L200 and (emit$5 or sound or alert$5 or audible or audio)	(US-PGPUB; USPAT)	OR	ON	ON	2020/06/29 05:41 PM
L202	2	"13309728"	(US-PGPUB; USPAT)	OR	ON	ON	2020/06/29 05:43 PM
L203	18	(((blu or bluetooth$4 or wifi or wi-fi or (blude adj2 tooth)) near7 pair$4) same (keychain or keyring or (key adj2 (ring or chain))) same (sound or alarm or alert or audible or audio))	(US-PGPUB; USPAT)	OR	ON	ON	2020/06/29 05:46 PM
L204	2	"20100323657"	(US-PGPUB; USPAT)	OR	ON	ON	2020/06/29 05:49 PM
L205	1	L204 and alert	(US-PGPUB; USPAT)	OR	ON	ON	2020/06/29 05:50 PM
L206	4	"20120077439"	(US-PGPUB; USPAT)	OR	ON	ON	2020/06/29 05:52 PM
L207	44	(((blu or bluetooth$4 or wifi or wi-fi or (blue adj2 tooth)) same pair$4) same (keychain or keyring or (key adj2 (ring or chain))) same (sound or alarm or alert or audible or audio))	(US-PGPUB; USPAT)	OR	ON	ON	2020/06/29 05:53 PM
L208	23	L207 and (@ad<="20100226" or @rlad<="20100226" or @pd<="20100226")	(US-PGPUB; USPAT)	OR	ON	ON	2020/06/29 05:53 PM
L209	78	((page or paged or paging) same (keychain or keyring or (key adj2 (ring or chain))) same (sound or alarm or alert or audible or audio))	(US-PGPUB; USPAT)	OR	ON	ON	2020/06/29 05:55 PM
L210	77	L209 and (@ad<="20100226" or @rlad<="20100226" or @pd<="20100226")	(US-PGPUB; USPAT)	OR	ON	ON	2020/06/29 05:55 PM
L211	0	"20099297014"	(US-PGPUB; USPAT)	OR	ON	ON	2020/06/29 06:01 PM

L212	1	"20090207014"	(US-PGPUB; USPAT)	OR	ON	ON	2020/06/29 06:01 PM
L213	1	L212 and (emit$5 or sound or alert$5 or audible or audio or alarm)	(US-PGPUB; USPAT)	OR	ON	ON	2020/06/29 06:02 PM
L214	25	"12713346"	(US-PGPUB; USPAT)	OR	ON	ON	2020/06/29 06:10 PM
L215	2	"20110210849"	(US-PGPUB; USPAT)	OR	ON	ON	2020/06/29 06:11 PM
L216	2	L215 and (emit$5 or sound or alert$5 or audible or audio or alarm)	(US-PGPUB; USPAT)	OR	ON	ON	2020/06/29 06:11 PM
L217	1	"7714737".pn.	(US-PGPUB; USPAT)	OR	ON	ON	2020/06/29 06:14 PM
L218	1	L217 and (emit$5 or sound or alert$5 or audible or audio)	(US-PGPUB; USPAT)	OR	ON	ON	2020/06/29 06:15 PM
L219	1	L217 and (keychain or (key adj2 chain))	(US-PGPUB; USPAT)	OR	ON	ON	2020/06/29 06:16 PM
L220	3972	((lost or find) same (page or paged or paging) same (sound or alarm or alert or audible or audio))	(US-PGPUB; USPAT)	OR	ON	ON	2020/06/29 06:32 PM
L221	2879	L220 and (@ad<="20100226" or @rlad<="20100226" or @pd<="20100226")	(US-PGPUB; USPAT)	OR	ON	ON	2020/06/29 06:32 PM
L222	1208	((lost or find) same ((page or paged or paging) near7 (sound or alarm or alert or audible or audio)))	(US-PGPUB; USPAT)	OR	ON	ON	2020/06/29 06:33 PM
L223	921	L222 and (@ad<="20100226" or @rlad<="20100226" or @pd<="20100226")	(US-PGPUB; USPAT)	OR	ON	ON	2020/06/29 06:33 PM
L224	17	L222 same pair$6	(US-PGPUB; USPAT)	OR	ON	ON	2020/06/29 06:34 PM
L225	329	((lost or misplaced) same ((page or paged or paging) near7 (sound or alarm or alert or audible or audio)))	(US-PGPUB; USPAT)	OR	ON	ON	2020/06/29 06:44 PM
L226	267	L225 and (@ad<="20100226" or @rlad<="20100226" or @pd<="20100226")	(US-PGPUB; USPAT)	OR	ON	ON	2020/06/29 06:45 PM
L227	194	L226 and (key or keychain)	(US-PGPUB; USPAT)	OR	ON	ON	2020/06/29 06:59 PM
L228	37	L226 and (key-chain or	(US-PGPUB; USPAT)	OR	ON	ON	2020/06/29

		keychain)					06:59 PM
L229	90	("10123161"|"20020103008"|"20030052860"|"20030162574"|"20030193399"|"20040097127"|"20040125080"|"20040167820"|"20040204074"|"20050065851"|"20050186968"|"20050231361"|"20060012488"|"20060152487"|"20060152488"|"20060152489"|"20060154642"|"20060259942"|"20070005840"|"20070013526"|"20070021148"|"20070038785"|"20070052177"|"20070060228"|"20070060384"|"20070066394"|"20070080933"|"20070130592"|"20070136264"|"20070279245"|"20080001814"|"20080012824"|"20080032713"|"20080052750"|"20080062120"|"20080166968"|"20080278445"|"20090074051"|"20090217335"|"20090237209"|"20090240814"|"20090249247"|"20090284664"|"20110210849"|"20110210959"|"20110212699"|"20110212702"|"20110215921"|"20120077439"|"20160227362"|"20180192236"|"4476469"|"5146231"|"5343136"|"5448261"|"5497339"|"5545857"|"5675524"|"5714932"|"5752205"|"5857148"|"5857157"|"6067018"|"6172640"|"6286060"|"6446127"|"6624752"|"6625472"|"6774787"|"6889057"|"6980546"|"7034684"|"7110789"|"7266391"|"7453357"|"7647511"|"7690994"|"7843427"|"7912503"|"8000647"|"8018726"|"8078787"|"8253559"|"8253560"|"8254878"|"8285248"|"8422954"|"8588806"|"8750928"|"9295024").PN.	(US-PGPUB; USPAT)	OR	ON	ON	2020/06/29 07:06 PM
L230	79	L229 and (emit$5 or sound or alert$5 or	(US-PGPUB; USPAT)	OR	ON	ON	2020/06/29 07:06 PM

		audible or audio)					
L231	79	L230 and (@ad<="20100226" or @rlad<="20100226" or @pd<="20100226")	(US-PGPUB; USPAT)	OR	ON	ON	2020/06/29 07:06 PM
L232	23	"7453357"	(US-PGPUB; USPAT)	OR	ON	ON	2020/06/29 07:21 PM
L233	2	"20110159917"	(US-PGPUB; USPAT)	OR	ON	ON	2020/06/29 07:24 PM
L234	2	"20100171612"	(US-PGPUB; USPAT)	OR	ON	ON	2020/06/29 07:28 PM
L235	0	"2010/0171612"	(US-PGPUB; USPAT)	OR	ON	ON	2020/06/29 07:28 PM
L236	0	"2011/0159917"	(US-PGPUB; USPAT)	OR	ON	ON	2020/06/29 07:28 PM
L237	2	"10645537"	(US-PGPUB; USPAT)	OR	ON	ON	2020/06/30 07:57 AM
L238	1	"20200228930"	(US-PGPUB; USPAT)	OR	ON	ON	2020/09/08 08:44 AM
L239	77352	(G08B13/1427 OR G08B21/0244 OR G08B21/0247 OR G08B21/0269 OR G08B21/0272 OR G08B21/0277 OR G08B25/016 OR H04L41/0618 OR H04W4/02 OR H04W4/024 OR H04W4/029 OR H04W4/20 OR H04W4/80 OR H04W64/00).CPC.	(US-PGPUB; USPAT)	OR	ON	ON	2020/09/08 08:45 AM
L240	90	("10123161"|"20020103008"|"20030052860"|"20030162574"|"20030193399"|"20040097127"|"20040125080"|"20040167820"|"20040204074"|"20050065851"|"20050186968"|"20050231361"|"20060012488"|"20060152487"|"20060152488"|"20060152489"|"20060154642"|"20060259942"|"20070005840"|"20070013526"|"20070021148"|"20070038785"|"20070052177"|"20070060228"|"20070060384"|"20070066394"|"20070080933"|"20070130592"|"20070136264"|"20070279245"|"20080001814"|"20080012824"|"2008	(US-PGPUB; USPAT)	OR	ON	ON	2020/09/08 08:45 AM

		0032713"|"2008005275 0"|"20080062120"|"200 80166968"|"200802784 45"|"20090074051"|"20 090217335"|"20090237 209"|"20090240814"|"2 0090249247"|"2009028 4664"|"20110210849"|" 20110210959"|"201102 12699"|"20110212702"| "20110215921"|"20120 077439"|"20160227362 "|"20180192236"|"4476 469"|"5146231"|"53431 36"|"5448261"|"549733 9"|"5545857"|"5675524" |"5714932"|"5752205"|" 5857148"|"5857157"|"6 067018"|"6172640"|"62 86060"|"6446127"|"662 4752"|"6625472"|"6774 787"|"6889057"|"69805 46"|"7034684"|"711078 9"|"7266391"|"7453357" |"7647511"|"7690994"|" 7843427"|"7912503"|"8 000647"|"8018726"|"80 78787"|"8253559"|"825 3560"|"8254878"|"8285 248"|"8422954"|"85888 06"|"8750928"|"929502 4").PN.					
L241	79	L240 and (emit$5 or sound or alert$5 or audible or audio)	(US-PGPUB; USPAT)	OR	ON	ON	2020/09/08 08:45 AM
L242	79	L241 and (@ad<="20100226" or @rlad<="20100226" or @pd<="20100226")	(US-PGPUB; USPAT)	OR	ON	ON	2020/09/08 08:45 AM
L243	53684	L239 and (emit$5 or sound or alert$5 or audible or audio)	(US-PGPUB; USPAT)	OR	ON	ON	2020/09/08 08:46 AM
L244	335	((lost or misplaced) same ((page or paged or paging) near7 (sound or alarm or alert or audible or audio)))	(US-PGPUB; USPAT)	OR	ON	ON	2020/09/08 08:46 AM
L245	271	L244 and (@ad<="20100226" or @rlad<="20100226" or @pd<="20100226")	(US-PGPUB; USPAT)	OR	ON	ON	2020/09/08 08:46 AM
L246	331	L244 and (emit$5 or sound or alert$5 or audible or audio)	(US-PGPUB; USPAT)	OR	ON	ON	2020/09/08 08:47 AM
L247	64	L239 and L246	(US-PGPUB; USPAT)	OR	ON	ON	2020/09/08 08:47 AM

L248	56	L247 and (@ad<="20100226" or @rlad<="20100226" or @pd<="20100226")	(US-PGPUB; USPAT)	OR	ON	ON	2020/09/08 08:48 AM
L249	1	"20200228930"	(US-PGPUB; USPAT)	OR	ON	ON	2020/09/08 09:06 AM
L250	27	(US-20070080933-$ or US-20110081866-$ or US-20080094185-$ or US-20050065851-$ or US-20030088469-$ or US-20080320190-$ or US-20090074051-$ or US-20070141989-$ or US-20090270036-$ or US-20090240814-$ or US-20090058663-$ or US-20090249247-$ or US-20070080934-$ or US-20110215921-$ or US-20060199538-$ or US-20050200478-$ or US-20070279245-$ or US-20070049241-$ or US-20080062120-$ or US-20110159917-$ or US-20100171612-$).did. or (US-8078787-$ or US-8174359-$ or US-6681109-$ or US-6400270-$ or US-7453357-$ or US-8736445-$).did.	(US-PGPUB; USPAT)	OR	ON	ON	2021/09/16 03:07 PM
L251	1	"20210029506"	(US-PGPUB; USPAT)	OR	ON	ON	2021/09/16 03:08 PM
L252	0	L251 and arrow	(US-PGPUB; USPAT)	OR	ON	ON	2021/09/16 03:08 PM
L253	1	L251 and direction$5	(US-PGPUB; USPAT)	OR	ON	ON	2021/09/16 03:11 PM
L254	10	L250 and (direction)	(US-PGPUB; USPAT)	OR	ON	ON	2021/09/16 03:13 PM
L255	2	"20070080933"	(US-PGPUB; USPAT)	OR	ON	ON	2021/09/16 03:21 PM
L256	2	L255 and (arrow or indicator)	(US-PGPUB; USPAT)	OR	ON	ON	2021/09/16 03:21 PM
L257	2	L255 and ("9g")	(US-PGPUB; USPAT)	OR	ON	ON	2021/09/16 03:22 PM
L258	21	L250 and (arrow or indication or indicator or indicat$5)	(US-PGPUB; USPAT)	OR	ON	ON	2021/09/16 03:27 PM
L259	1	"20080062120"	(US-PGPUB; USPAT)	OR	ON	ON	2021/09/16 03:46 PM
L260	1	L259 and "304"	(US-PGPUB; USPAT)	OR	ON	ON	2021/09/16 03:46 PM

L261	6	L250 not L258	(US-PGPUB; USPAT)	OR	ON	ON	2021/09/16 03:50 PM
L262	3	"10834539"	(US-PGPUB; USPAT)	OR	ON	ON	2021/09/16 03:59 PM
L263	1	"10834539".pn.	(US-PGPUB; USPAT)	OR	ON	ON	2021/09/16 04:00 PM
L264	1	L263 and long.clm.	(US-PGPUB; USPAT)	OR	ON	ON	2021/09/16 04:00 PM
L265	1	L263 and distance.clm.	(US-PGPUB; USPAT)	OR	ON	ON	2021/09/16 04:08 PM
L266	87052	(H04W4/02 OR H04W4/024 OR H04W4/029 OR H04W4/80 OR H04W64/00).CPC.	(US-PGPUB; USPAT)	OR	ON	ON	2021/09/16 04:16 PM
L267	3456	L266 and (direction same arrow)	(US-PGPUB; USPAT)	OR	ON	ON	2021/09/16 04:17 PM
L268	909	L266 and ((display$4 or visually) same (direction same arrow) same (location or position))	(US-PGPUB; USPAT)	OR	ON	ON	2021/09/16 04:18 PM
L269	253	L268 and (@ad<="20100226" or @rlad<="20100226" or @pd<="20100226")	(US-PGPUB; USPAT)	OR	ON	ON	2021/09/16 04:18 PM
L270	93	("10123161"|"20020103008"|"20030052860"|"20030162574"|"20030193399"|"20040097127"|"20040125080"|"20040167820"|"20040204074"|"20050065851"|"20050186968"|"20050231361"|"20060012488"|"20060152487"|"20060152488"|"20060152489"|"20060154642"|"20060259942"|"20070005840"|"20070013526"|"20070021148"|"20070038785"|"20070052177"|"20070060228"|"20070060384"|"20070066394"|"20070080933"|"20070130592"|"20070136264"|"20070279245"|"20080001814"|"20080012824"|"20080032713"|"20080052750"|"20080062120"|"20080166968"|"20080278445"|"20090074051"|"20090217335"|"20090237209"|"20090240814"|"20090249247"|"20090284664"|"20110210849"|	(US-PGPUB; USPAT)	OR	ON	ON	2021/09/16 04:32 PM

		20110210959"|"20110212699"|"20110212702"|"20110215921"|"20120077439"|"20160227362"|"20180192236"|"4476469"|"5146231"|"5343136"|"5448261"|"5497339"|"5545857"|"5675524"|"5714932"|"5752205"|"5857148"|"5857157"|"6067018"|"6172640"|"6286060"|"6400270"|"6446127"|"6624752"|"6625472"|"6774787"|"6889057"|"6980546"|"7034684"|"7110789"|"7266391"|"7453357"|"7647511"|"7690994"|"7714737"|"7843427"|"7912503"|"8000647"|"8018726"|"8078787"|"8174359"|"8253559"|"8253560"|"8254878"|"8285248"|"8422954"|"8588806"|"8750928"|"9295024").PN.					
L271	6	L270 and ((display$4 or visually) same (direction same arrow) same (location or position))	(US-PGPUB; USPAT)	OR	ON	ON	2021/09/16 04:33 PM
L272	1	"20070080933".pn.	(US-PGPUB; USPAT)	OR	ON	ON	2021/09/16 04:54 PM
L273	1	"20140194148".pn.	(US-PGPUB; USPAT)	OR	ON	ON	2021/09/16 04:56 PM
L274	24	("2007/0080933").urpn. AND (PGPB | USPT | USOC).dbnm.	(US-PGPUB; USPAT; USOCR)	OR	ON	ON	2021/11/17 07:51 AM
L275	86	("8253559").urpn. AND (PGPB | USPT | USOC).dbnm.	(US-PGPUB; USPAT; USOCR)	OR	ON	ON	2021/11/17 07:53 AM
L276	17	("8253560").urpn. AND (PGPB | USPT | USOC).dbnm.	(US-PGPUB; USPAT; USOCR)	OR	ON	ON	2021/11/17 07:56 AM
L277	30	((US-20070080934-A1 OR US-20140194148-A1 OR US-20080182589-A1 OR US-20100171612-A1 OR US-20110159917-A1 OR US-20080062120-A1 OR US-20070049241-A1 OR US-20070279245-A1 OR US-20050200478-A1 OR US-20060199538-A1 OR US-20110215921-	(USPAT; US-PGPUB; FPRS; USOCR; IBM_TDB; EPO; JPO; DERWENT; FIT (AU, AP, AT, BE, BG, BR, BY, CA, CH, CN, CS, CU, CZ, DD, DE, DK, EA, EE, EP, ES, FI, FR, GB, HR, HU, ID, IE, IL, IS, IT, JP, KR, LT, LU, LV, MA, OA, RU, SU, WO, MC, MD, MY, NL, NO, NZ, PH, PL, PT, RO, RS, SE, SG, SI,	OR	ON	ON	2021/11/17 07:58 AM

		A1 OR US-20070080933-A1 OR US-20090249247-A1 OR US-20090058663-A1 OR US-20090240814-A1 OR US-20090270036-A1 OR US-20070141989-A1 OR US-20090074051-A1 OR US-20080320190-A1 OR US-20030088469-A1 OR US-20050065851-A1 OR US-20080094185-A1 OR US-20110081866-A1).did. AND PGPB.dbnm.) OR ((US-9264856-B1 OR US-8736445-B2 OR US-7453357-B2 OR US-6400270-B1 OR US-6681109-B1 OR US-8174359-B1 OR US-8078787-B2).did. AND USPT.dbnm.)	SK, TH, TN, TR, TW, UA, VN))				
L278	4	L277 AND ((display$4 OR visually) SAME (direction SAME arrow) SAME (location OR position))	(US-PGPUB; USPAT)	OR	ON	ON	2021/11/17 07:59 AM
L279	88616	(H04W4/02 OR H04W4/024 OR H04W4/029 OR H04W4/80 OR H04W64/00).CPC.	(US-PGPUB; USPAT)	OR	ON	ON	2021/11/17 08:02 AM
L280	925	L279 AND ((display$4 OR visually) SAME (direction SAME arrow) SAME (location OR position))	(US-PGPUB; USPAT)	OR	ON	ON	2021/11/17 08:03 AM
L281	3445	(generat$5 adj2 pair$4 adj2 signal)	(US-PGPUB; USPAT; USOCR)	OR	ON	ON	2021/11/17 08:05 AM
L282	1	280 AND 281	(US-PGPUB; USPAT; USOCR)	OR	ON	ON	2021/11/17 08:05 AM
L283	1	L280 AND L281	(US-PGPUB; USPAT; USOCR)	OR	ON	ON	2021/11/17 08:06 AM
L284	62	L279 AND L281	(US-PGPUB; USPAT; USOCR)	OR	ON	ON	2021/11/17 08:06 AM
L285	1226	L281 AND ((location OR direction) SAME (arrow OR point$4 OR indicat$5))	(US-PGPUB; USPAT; USOCR)	OR	ON	ON	2021/11/17 08:13 AM
L286	733	L285 AND (@ad<="20100226" OR	(US-PGPUB; USPAT)	OR	ON	ON	2021/11/17 08:14 AM

		@rlad<="20100226" OR @pd<="20100226")					
L287	373	L286 AND display$4	(US-PGPUB; USPAT)	OR	ON	ON	2021/11/17 08:15 AM
L288	233	(serving adj3 cell) SAME paging SAME occasion$1	(US-PGPUB; USPAT; USOCR)	OR	ON	ON	2021/11/17 05:13 PM
L289	2	"11265680"	(US-PGPUB; USPAT; USOCR)	OR	ON	ON	2022/03/21 01:05 PM
L290	1	"11265680".pn.	(US-PGPUB; USPAT; USOCR)	OR	ON	ON	2022/03/21 01:07 PM
L291	1	L290 AND (ultra$10 OR ultr-wideband OR wideband OR (ultra adj2 wideband))	(US-PGPUB; USPAT; USOCR)	OR	ON	ON	2022/03/21 01:08 PM
L292	0	L290 AND ((TOF OR (time adj3 flight)) SAME (ultra$10 OR ultr-wideband OR wideband OR (ultra adj2 wideband)))	(US-PGPUB; USPAT; USOCR)	OR	ON	ON	2022/03/21 01:10 PM
L293	1	L290 AND (TOF OR (time adj3 flight))	(US-PGPUB; USPAT; USOCR)	OR	ON	ON	2022/03/21 01:10 PM
L294	14	"9942700"	(US-PGPUB; USPAT; USOCR)	OR	ON	ON	2022/03/21 01:23 PM
L295	10	"10440501"	(US-PGPUB; USPAT; USOCR)	OR	ON	ON	2022/03/21 01:25 PM
L296	2	"11265680"	(US-PGPUB; USPAT; USOCR)	OR	ON	ON	2022/03/21 01:46 PM
L297	1	L296 AND (flight OR round)	(US-PGPUB; USPAT; USOCR)	OR	ON	ON	2022/03/21 01:47 PM
L298	1	L296 AND (ultra)	(US-PGPUB; USPAT; USOCR)	OR	ON	ON	2022/03/21 01:49 PM
L299	1	L296 AND (estimate)	(US-PGPUB; USPAT; USOCR)	OR	ON	ON	2022/03/21 01:51 PM
L300	2	L296 AND (distance)	(US-PGPUB; USPAT; USOCR)	OR	ON	ON	2022/03/21 01:51 PM
L301	1	L296 AND (orientation)	(US-PGPUB; USPAT; USOCR)	OR	ON	ON	2022/03/21 01:53 PM
L302	1	L296 AND (orientation SAME rotation)	(US-PGPUB; USPAT; USOCR)	OR	ON	ON	2022/03/21 01:55 PM
L303	1	L296 AND (names)	(US-PGPUB; USPAT; USOCR)	OR	ON	ON	2022/03/21 01:56 PM
L304	1	L296 AND (bluetooth$3)	(US-PGPUB; USPAT; USOCR)	OR	ON	ON	2022/03/21 01:57 PM
L305	1	L296 AND (nam$3)	(US-PGPUB; USPAT; USOCR)	OR	ON	ON	2022/03/21 01:58 PM
L306	4	"10834539"	(US-PGPUB; USPAT; USOCR)	OR	ON	ON	2022/03/21 02:03 PM
L307	4	L306 AND (time OR flight OR round)	(US-PGPUB; USPAT; USOCR)	OR	ON	ON	2022/03/21 02:03 PM

L308	3	L306 AND (orientation)	(US-PGPUB; USPAT; USOCR)	OR	ON	ON	2022/03/21 02:04 PM
L309	3	L306 AND (orientation OR rotation)	(US-PGPUB; USPAT; USOCR)	OR	ON	ON	2022/03/21 02:07 PM
L310	6	"10645537"	(US-PGPUB; USPAT; USOCR)	OR	ON	ON	2022/03/21 02:08 PM
L311	5	L310 AND (orientation OR rotation)	(US-PGPUB; USPAT; USOCR)	OR	ON	ON	2022/03/21 02:08 PM
L312	10	"10440501"	(US-PGPUB; USPAT; USOCR)	OR	ON	ON	2022/03/21 02:10 PM
L313	1	"10440501".pn.	(US-PGPUB; USPAT; USOCR)	OR	ON	ON	2022/03/21 02:10 PM
L314	1	L313 AND (orientation OR rotation)	(US-PGPUB; USPAT; USOCR)	OR	ON	ON	2022/03/21 02:10 PM
L315	1	L314 AND (time OR flight OR round)	(US-PGPUB; USPAT; USOCR)	OR	ON	ON	2022/03/21 02:11 PM
L316	1	"10123161".pn.	(US-PGPUB; USPAT; USOCR)	OR	ON	ON	2022/03/21 02:12 PM
L317	1	L316 AND (time OR flight OR round)	(US-PGPUB; USPAT; USOCR)	OR	ON	ON	2022/03/21 02:13 PM
L318	1	L317 AND (orientation OR rotation)	(US-PGPUB; USPAT; USOCR)	OR	ON	ON	2022/03/21 02:13 PM
L319	1	L317 AND (rotation)	(US-PGPUB; USPAT; USOCR)	OR	ON	ON	2022/03/21 02:14 PM
L320	1	L316 AND (rotation)	(US-PGPUB; USPAT; USOCR)	OR	ON	ON	2022/03/21 02:15 PM
L321	1	"9942700".pn.	(US-PGPUB; USPAT; USOCR)	OR	ON	ON	2022/03/21 02:16 PM
L322	1	L321 AND rotation$4	(US-PGPUB; USPAT; USOCR)	OR	ON	ON	2022/03/21 02:16 PM
L323	1	L321 AND (time OR flight OR round)	(US-PGPUB; USPAT; USOCR)	OR	ON	ON	2022/03/21 02:17 PM
L324	1	L321 AND (TOF OR (time adj3 flight))	(US-PGPUB; USPAT; USOCR)	OR	ON	ON	2022/03/21 02:18 PM
L325	1	"9295024".pn.	(US-PGPUB; USPAT; USOCR)	OR	ON	ON	2022/03/21 02:19 PM
L326	1	L325 AND (TOF OR (time adj3 flight))	(US-PGPUB; USPAT; USOCR)	OR	ON	ON	2022/03/21 02:19 PM
L327	1	L325 AND rotation$4	(US-PGPUB; USPAT; USOCR)	OR	ON	ON	2022/03/21 02:20 PM
L328	1	L325 AND (ultra$8 OR wideband)	(US-PGPUB; USPAT; USOCR)	OR	ON	ON	2022/03/21 02:21 PM
L329	1	"8768381".pn.	(US-PGPUB; USPAT; USOCR)	OR	ON	ON	2022/03/21 02:21 PM
L330	1	L329 AND (ultra$8 OR wideband)	(US-PGPUB; USPAT; USOCR)	OR	ON	ON	2022/03/21 02:21 PM
L331	1	L329 AND rotation$4	(US-PGPUB; USPAT; USOCR)	OR	ON	ON	2022/03/21 02:21 PM
L332	1	L329 AND (TOF OR (time adj3 flight))	(US-PGPUB; USPAT; USOCR)	OR	ON	ON	2022/03/21 02:22 PM

L333	1	"8588806".pn.	(US-PGPUB; USPAT; USOCR)	OR	ON	ON	2022/03/21 02:23 PM
L334	1	L333 AND (TOF OR (time adj3 flight))	(US-PGPUB; USPAT; USOCR)	OR	ON	ON	2022/03/21 02:23 PM
L335	1	L333 AND rotation$4	(US-PGPUB; USPAT; USOCR)	OR	ON	ON	2022/03/21 02:23 PM
L336	1	L333 AND (ultra$8 OR wideband)	(US-PGPUB; USPAT; USOCR)	OR	ON	ON	2022/03/21 02:24 PM
L337	30	((US-20070080934-A1 OR US-20140194148-A1 OR US-20080182589-A1 OR US-20100171612-A1 OR US-20110159917-A1 OR US-20080062120-A1 OR US-20070049241-A1 OR US-20070279245-A1 OR US-20050200478-A1 OR US-20060199538-A1 OR US-20110215921-A1 OR US-20070080933-A1 OR US-20090249247-A1 OR US-20090058663-A1 OR US-20090240814-A1 OR US-20090270036-A1 OR US-20070141989-A1 OR US-20090074051-A1 OR US-20080320190-A1 OR US-20030088469-A1 OR US-20050065851-A1 OR US-20080094185-A1 OR US-20110081866-A1).did. AND PGPB.dbnm.) OR ((US-9264856-B1 OR US-8736445-B2 OR US-7453357-B2 OR US-6400270-B1 OR US-6681109-B1 OR US-8174359-B1 OR US-8078787-B2).did. AND USPT.dbnm.)	(US-PGPUB; USPAT; USOCR; FIT (AU, AP, AT, BE, BG, BR, BY, CA, CH, CN, CS, CU, CZ, DD, DE, DK, EA, EE, EP, ES, FI, FR, GB, HR, HU, ID, IE, IL, IS, IT, JP, KR, LT, LU, LV, MA, OA, RU, SU, WO, MC, MD, MY, NL, NO, NZ, PH, PL, PT, RO, RS, SE, SG, SI, SK, TH, TN, TR, TW, UA, VN); FPRS; EPO; JPO; DERWENT; IBM_TDB)	OR	ON	ON	2022/03/21 02:24 PM
L338	6	L337 AND (ultra$8 OR wideband OR ultra?wideband OR (ultra adj2 wideband))	(US-PGPUB; USPAT; USOCR)	OR	ON	ON	2022/03/21 02:25 PM
L339	6	L337 AND (UWB OR ultra$8 OR wideband OR ultra?wideband OR (ultra adj2 wideband))	(US-PGPUB; USPAT; USOCR)	OR	ON	ON	2022/03/21 02:27 PM

L340	6	L337 AND (UWB OR ultra$8 OR wideband OR ultra?wideband OR (ultra adj2 wideband) OR (ultra adj2 wide adj2 band))	(US-PGPUB; USPAT; USOCR)	OR	ON	ON	2022/03/21 02:27 PM
L341	1	L333 AND (map)	(US-PGPUB; USPAT; USOCR)	OR	ON	ON	2022/03/21 02:32 PM
L342	0	L337 AND (TOF OR time?of?flight OR (time adj3 flight) OR (round adj3 trip))	(US-PGPUB; USPAT; USOCR)	OR	ON	ON	2022/03/21 02:34 PM
L343	6	L337 AND (TOF OR time?of?flight OR (time adj3 flight) OR (round adj3 trip) OR delay)	(US-PGPUB; USPAT; USOCR)	OR	ON	ON	2022/03/21 02:34 PM
L344	23695	(TOF OR time?of?flight OR (time adj3 flight) OR (round adj3 trip)) SAME (UWB OR ultra$8 OR wideband OR ultra?wideband OR (ultra adj2 wideband) OR (ultra adj2 wide adj2 band))	(US-PGPUB; USPAT; USOCR)	OR	ON	ON	2022/03/21 02:36 PM
L345	7337	L344 AND (@ad<="20100226" OR @rlad<="20100226" OR @pd<="20100226")	(US-PGPUB; USPAT)	OR	ON	ON	2022/03/21 02:37 PM
L346	9643	(distance OR position) SAME (TOF OR time?of?flight OR (time adj3 flight) OR (round adj3 trip)) SAME (UWB OR ultra$8 OR wideband OR ultra?wideband OR (ultra adj2 wideband) OR (ultra adj2 wide adj2 band))	(US-PGPUB; USPAT; USOCR)	OR	ON	ON	2022/03/21 02:37 PM
L347	1112	estimat$5 SAME (distance OR position) SAME (TOF OR time?of?flight OR (time adj3 flight) OR (round adj3 trip)) SAME (UWB OR ultra$8 OR wideband OR ultra?wideband OR (ultra adj2 wideband) OR (ultra adj2 wide adj2 band))	(US-PGPUB; USPAT; USOCR)	OR	ON	ON	2022/03/21 02:37 PM
L348	297	L347 AND (@ad<="20100226" OR @rlad<="20100226"	(US-PGPUB; USPAT)	OR	ON	ON	2022/03/21 02:37 PM

		OR @pd<="20100226")					
L349	314	(arrow adj3 pointing adj3 direction).clm.	(US-PGPUB; USPAT; USOCR)	OR	ON	ON	2022/03/21 03:40 PM
L350	153	L349 AND (@ad<="20100226" OR @rlad<="20100226" OR @pd<="20100226")	(US-PGPUB; USPAT)	OR	ON	ON	2022/03/21 03:40 PM
L351	1	"20160227362".pn.	(US-PGPUB; USPAT; USOCR)	OR	ON	ON	2022/03/21 06:03 PM
L352	1	L351 AND (time OR flight OR (round adj3 trip) OR (time adj2 delay))	(US-PGPUB; USPAT; USOCR)	OR	ON	ON	2022/03/21 06:03 PM
L353	193	(distance OR position OR location) SAME (round adj3 trip adj2 signal adj2 delay)	(US-PGPUB; USPAT; USOCR)	OR	ON	ON	2022/03/21 06:10 PM
L354	1	L351 AND (wideband OR uwb OR (wide adj2 band))	(US-PGPUB; USPAT; USOCR)	OR	ON	ON	2022/03/21 06:15 PM
L355	367854	".353" AND (@ad<="20100226" OR @rlad<="20100226" OR @pd<="20100226")	(US-PGPUB; USPAT)	OR	ON	ON	2022/03/21 06:21 PM
L356	130	L353 AND (@ad<="20100226" OR @rlad<="20100226" OR @pd<="20100226")	(US-PGPUB; USPAT)	OR	ON	ON	2022/03/21 06:21 PM
L357	36	((US-20070080934-A1 OR US-20140194148-A1 OR US-20080182589-A1 OR US-20100171612-A1 OR US-20110159917-A1 OR US-20080062120-A1 OR US-20070049241-A1 OR US-20070279245-A1 OR US-20050200478-A1 OR US-20060199538-A1 OR US-20110215921-A1 OR US-20070080933-A1 OR US-20090249247-A1 OR US-20090058663-A1 OR US-20090240814-A1 OR US-20090270036-A1 OR US-20070141989-A1 OR US-20090074051-A1 OR US-20080320190-A1 OR US-20030088469-A1 OR US-	(US-PGPUB; USPAT; USOCR; FIT (AU, AP, AT, BE, BG, BR, BY, CA, CH, CN, CS, CU, CZ, DD, DE, DK, EA, EE, EP, ES, FI, FR, GB, HR, HU, ID, IE, IL, IS, IT, JP, KR, LT, LU, LV, MA, OA, RU, SU, WO, MC, MD, MY, NL, NO, NZ, PH, PL, PT, RO, RS, SE, SG, SI, SK, TH, TN, TR, TW, UA, VN); FPRS; EPO; JPO; DERWENT; IBM_TDB)	OR	ON	ON	2022/03/21 06:37 PM

		20050065851-A1 OR US-20080094185-A1 OR US-20110081866-A1 OR US-20040170136-A1).did. AND PGPB.dbnm.) OR ((US-9264856-B1 OR US-8736445-B2 OR US-7453357-B2 OR US-6400270-B1 OR US-6681109-B1 OR US-8174359-B1 OR US-8078787-B2 OR US-5416478-A OR US-7487043-B2 OR US-7260399-B1 OR US-8200240-B1 OR US-5379447-A).did. AND USPT.dbnm.)					
L358	697827	(display$5 SAME pair$4 SAME device$1)	(US-PGPUB; USPAT; USOCR; FIT (AU, AP, AT, BE, BG, BR, BY, CA, CH, CN, CS, CU, CZ, DD, DE, DK, EA, EE, EP, ES, FI, FR, GB, HR, HU, ID, IE, IL, IS, IT, JP, KR, LT, LU, LV, MA, OA, RU, SU, WO, MC, MD, MY, NL, NO, NZ, PH, PL, PT, RO, RS, SE, SG, SI, SK, TH, TN, TR, TW, UA, VN); FPRS; EPO; JPO; DERWENT; IBM_TDB)	OR	ON	ON	2022/03/21 06:45 PM
L359	28328	(display$5 SAME name SAME pair$4 SAME device$1)	(US-PGPUB; USPAT; USOCR; FIT (AU, AP, AT, BE, BG, BR, BY, CA, CH, CN, CS, CU, CZ, DD, DE, DK, EA, EE, EP, ES, FI, FR, GB, HR, HU, ID, IE, IL, IS, IT, JP, KR, LT, LU, LV, MA, OA, RU, SU, WO, MC, MD, MY, NL, NO, NZ, PH, PL, PT, RO, RS, SE, SG, SI, SK, TH, TN, TR, TW, UA, VN); FPRS; EPO; JPO; DERWENT; IBM_TDB)	OR	ON	ON	2022/03/21 06:45 PM
L360	1210	L359 AND (@ad<="20100226" OR @rlad<="20100226" OR @pd<="20100226")	(US-PGPUB; USPAT)	OR	ON	ON	2022/03/21 06:46 PM
L361	6170	(display$5 SAME name SAME (pair$4 near5	(US-PGPUB; USPAT; USOCR; FIT (AP, AT,	OR	ON	ON	2022/03/21 06:47 PM

		device$1))	AU, BE, BG, BR, BY, CA, CH, CN, CS, CU, CZ, DD, DE, DK, EA, EE, EP, ES, FI, FR, GB, HR, HU, ID, IE, IL, IS, IT, JP, KR, LT, LU, LV, MA, MC, MD, MY, NL, NO, NZ, OA, PH, PL, PT, RO, RS, RU, SE, SG, SI, SK, SU, TH, TN, TR, TW, UA, VN, WO); FPRS; EPO; JPO; DERWENT; IBM_TDB)				
L362	316	L361 AND (@ad<="20100226" OR @rlad<="20100226" OR @pd<="20100226")	(US-PGPUB; USPAT)	OR	ON	ON	2022/03/21 06:47 PM
L363	1	L351 AND orientation	(US-PGPUB; USPAT)	OR	ON	ON	2022/03/21 07:20 PM
L364	1	L351 AND manual$5	(US-PGPUB; USPAT)	OR	ON	ON	2022/03/21 07:27 PM
L365	39	((US-20070080934-A1 OR US-20140194148-A1 OR US-20080182589-A1 OR US-20100171612-A1 OR US-20110159917-A1 OR US-20080062120-A1 OR US-20070049241-A1 OR US-20070279245-A1 OR US-20050200478-A1 OR US-20060199538-A1 OR US-20110215921-A1 OR US-20070080933-A1 OR US-20090249247-A1 OR US-20090058663-A1 OR US-20090240814-A1 OR US-20090270036-A1 OR US-20070141989-A1 OR US-20090074051-A1 OR US-20080320190-A1 OR US-20030088469-A1 OR US-20050065851-A1 OR US-20080094185-A1 OR US-20110081866-A1 OR US-20040170136-A1 OR US-20090156123-A1 OR US-20090034591-A1 OR US-	(US-PGPUB; USPAT; USOCR; FIT (AP, AT, AU, BE, BG, BR, BY, CA, CH, CN, CS, CU, CZ, DD, DE, DK, EA, EE, EP, ES, FI, FR, GB, HR, HU, ID, IE, IL, IS, IT, JP, KR, LT, LU, LV, MA, MC, MD, MY, NL, NO, NZ, OA, PH, PL, PT, RO, RS, RU, SE, SG, SI, SK, SU, TH, TN, TR, TW, UA, VN, WO); FPRS; EPO; JPO; DERWENT; IBM_TDB)	OR	ON	ON	2022/03/21 07:27 PM

		20090270093-A1).did. AND PGPB.dbnm.) OR ((US-9264856-B1 OR US-8736445-B2 OR US-7453357-B2 OR US-6400270-B1 OR US-6681109-B1 OR US-8174359-B1 OR US-8078787-B2 OR US-5416478-A OR US-7487043-B2 OR US-7260399-B1 OR US-8200240-B1 OR US-5379447-A).did. AND USPT.dbnm.)					
L366	39	((US-20070080934-A1 OR US-20140194148-A1 OR US-20080182589-A1 OR US-20100171612-A1 OR US-20110159917-A1 OR US-20080062120-A1 OR US-20070049241-A1 OR US-20070279245-A1 OR US-20050200478-A1 OR US-20060199538-A1 OR US-20110215921-A1 OR US-20070080933-A1 OR US-20090249247-A1 OR US-20090058663-A1 OR US-20090240814-A1 OR US-20090270036-A1 OR US-20070141989-A1 OR US-20090074051-A1 OR US-20080320190-A1 OR US-20030088469-A1 OR US-20050065851-A1 OR US-20080094185-A1 OR US-20110081866-A1 OR US-20040170136-A1 OR US-20090156123-A1 OR US-20090034591-A1 OR US-20090270093-A1).did. AND PGPB.dbnm.) OR ((US-9264856-B1 OR US-8736445-B2 OR US-7453357-B2 OR US-6400270-B1 OR US-6681109-B1 OR US-8174359-B1 OR	(US-PGPUB; USPAT; USOCR; FIT (AP, AT, AU, BE, BG, BR, BY, CA, CH, CN, CS, CU, CZ, DD, DE, DK, EA, EE, EP, ES, FI, FR, GB, HR, HU, ID, IE, IL, IS, IT, JP, KR, LT, LU, LV, MA, MC, MD, MY, NL, NO, NZ, OA, PH, PL, PT, RO, RS, RU, SE, SG, SI, SK, SU, TH, TN, TR, TW, UA, VN, WO); FPRS; EPO; JPO; DERWENT; IBM_TDB)	OR	ON	ON	2022/03/21 07:27 PM

		US-8078787-B2 OR US-5416478-A OR US-7487043-B2 OR US-7260399-B1 OR US-8200240-B1 OR US-5379447-A).did. AND USPT.dbnm.)					
L367	7	L366 AND (orientation)	(US-PGPUB; USPAT; USOCR; FIT (AP, AT, AU, BE, BG, BR, BY, CA, CH, CN, CS, CU, CZ, DD, DE, DK, EA, EE, EP, ES, FI, FR, GB, HR, HU, ID, IE, IL, IS, IT, JP, KR, LT, LU, LV, MA, MC, MD, MY, NL, NO, NZ, OA, PH, PL, PT, RO, RS, RU, SE, SG, SI, SK, SU, TH, TN, TR, TW, UA, VN, WO); FPRS; EPO; JPO; DERWENT; IBM_TDB)	OR	ON	ON	2022/03/21 07:27 PM
L368	0	L366 AND (chang$5 near7 orientation)	(US-PGPUB; USPAT; USOCR; FIT (AP, AT, AU, BE, BG, BR, BY, CA, CH, CN, CS, CU, CZ, DD, DE, DK, EA, EE, EP, ES, FI, FR, GB, HR, HU, ID, IE, IL, IS, IT, JP, KR, LT, LU, LV, MA, MC, MD, MY, NL, NO, NZ, OA, PH, PL, PT, RO, RS, RU, SE, SG, SI, SK, SU, TH, TN, TR, TW, UA, VN, WO); FPRS; EPO; JPO; DERWENT; IBM_TDB)	OR	ON	ON	2022/03/21 07:32 PM
L369	11720	pair$5 SAME (locatrion OR position) SAME (chang$5 near7 orientation)	(US-PGPUB; USPAT; USOCR; FIT (AP, AT, AU, BE, BG, BR, BY, CA, CH, CN, CS, CU, CZ, DD, DE, DK, EA, EE, EP, ES, FI, FR, GB, HR, HU, ID, IE, IL, IS, IT, JP, KR, LT, LU, LV, MA, MC, MD, MY, NL, NO, NZ, OA, PH, PL, PT, RO, RS, RU, SE, SG, SI, SK, SU, TH, TN, TR, TW, UA, VN, WO); FPRS; EPO; JPO; DERWENT; IBM_TDB)	OR	ON	ON	2022/03/21 07:32 PM
L370	313	pair$5 SAME (locatrion OR position) SAME	(US-PGPUB; USPAT; USOCR; FIT (AP, AT,	OR	ON	ON	2022/03/21 07:32 PM

		(user near7 chang$5 near7 orientation)	AU, BE, BG, BR, BY, CA, CH, CN, CS, CU, CZ, DD, DE, DK, EA, EE, EP, ES, FI, FR, GB, HR, HU, ID, IE, IL, IS, IT, JP, KR, LT, LU, LV, MA, MC, MD, MY, NL, NO, NZ, OA, PH, PL, PT, RO, RS, RU, SE, SG, SI, SK, SU, TH, TN, TR, TW, UA, VN, WO); FPRS; EPO; JPO; DERWENT; IBM_TDB)				
L371	12723374	L370AND (@ad<="20100226" OR @rlad<="20100226" OR @pd<="20100226")	(US-PGPUB; USPAT)	OR	ON	ON	2022/03/21 07:32 PM
L372	29	L370 AND (@ad<="20100226" OR @rlad<="20100226" OR @pd<="20100226")	(US-PGPUB; USPAT)	OR	ON	ON	2022/03/21 07:32 PM
L373	0	L366 AND (turn$4 adj4 around)	(US-PGPUB; USPAT)	OR	ON	ON	2022/03/21 07:34 PM
L374	1278	(turn$4 adj4 around) SAME (determin$5 nEAR7 (position OR location))	(US-PGPUB; USPAT)	OR	ON	ON	2022/03/21 07:34 PM
L375	594	L374 AND (@ad<="20100226" OR @rlad<="20100226" OR @pd<="20100226")	(US-PGPUB; USPAT)	OR	ON	ON	2022/03/21 07:35 PM
L376	40	((US-8078787-B2 OR US-9264856-B1 OR US-8736445-B2 OR US-7453357-B2 OR US-6400270-B1 OR US-8174359-B1 OR US-6681109-B1 OR US-5416478-A OR US-7487043-B2 OR US-7260399-B1 OR US-8200240-B1 OR US-5379447-A).did. AND USPT.dbnm.) OR ((US-20140194148-A1 OR US-20080182589-A1 OR US-20100171612-A1 OR US-20110159917-A1 OR US-20080062120-A1 OR US-20070049241-A1 OR US-20070279245-A1 OR US-20050200478-A1 OR US-20060199538-	(US-PGPUB; USPAT; USOCR; FIT (AU, AP, AT, BE, BG, BR, BY, CA, CH, CN, CS, CU, CZ, DD, DE, DK, EA, EE, EP, ES, FI, FR, GB, HR, HU, ID, IE, IL, IS, IT, JP, KR, LT, LU, LV, MA, OA, RU, SU, WO, MC, MD, MY, NL, NO, NZ, PH, PL, PT, RO, RS, SE, SG, SI, SK, TH, TN, TR, TW, UA, VN); FPRS; EPO; JPO; DERWENT; IBM_TDB)	OR	ON	ON	2022/03/22 07:00 AM

		A1 OR US-20110215921-A1 OR US-20090249247-A1 OR US-20070080933-A1 OR US-20110081866-A1 OR US-20080094185-A1 OR US-20050065851-A1 OR US-20030088469-A1 OR US-20090074051-A1 OR US-20070141989-A1 OR US-20090270036-A1 OR US-20090240814-A1 OR US-20090058663-A1 OR US-20070080934-A1 OR US-20080320190-A1 OR US-20040170136-A1 OR US-20090156123-A1 OR US-20090034591-A1 OR US-20090270093-A1 OR US-20050062604-A1).did. AND PGPB.dbnm.)					
L377	85	"7260399"	(US-PGPUB; USPAT; USOCR; FIT (AU, AP, AT, BE, BG, BR, BY, CA, CH, CN, CS, CU, CZ, DD, DE, DK, EA, EE, EP, ES, FI, FR, GB, HR, HU, ID, IE, IL, IS, IT, JP, KR, LT, LU, LV, MA, OA, RU, SU, WO, MC, MD, MY, NL, NO, NZ, PH, PL, PT, RO, RS, SE, SG, SI, SK, TH, TN, TR, TW, UA, VN); FPRS; EPO; JPO; DERWENT; IBM_TDB)	OR	ON	ON	2022/03/22 07:00 AM
L378	2	"7260399".pn.	(US-PGPUB; USPAT; USOCR; FIT (AU, AP, AT, BE, BG, BR, BY, CA, CH, CN, CS, CU, CZ, DD, DE, DK, EA, EE, EP, ES, FI, FR, GB, HR, HU, ID, IE, IL, IS, IT, JP, KR, LT, LU, LV, MA, OA, RU, SU, WO, MC, MD, MY, NL, NO, NZ, PH, PL, PT, RO, RS, SE, SG, SI, SK, TH, TN, TR, TW, UA, VN); FPRS; EPO;	OR	ON	ON	2022/03/22 07:01 AM

			JPO; DERWENT; IBM_TDB)				
L379	1	L377 AND compass	(US-PGPUB; USPAT; USOCR; FIT (AU, AP, AT, BE, BG, BR, BY, CA, CH, CN, CS, CU, CZ, DD, DE, DK, EA, EE, EP, ES, FI, FR, GB, HR, HU, ID, IE, IL, IS, IT, JP, KR, LT, LU, LV, MA, OA, RU, SU, WO, MC, MD, MY, NL, NO, NZ, PH, PL, PT, RO, RS, SE, SG, SI, SK, TH, TN, TR, TW, UA, VN); FPRS; EPO; JPO; DERWENT; IBM_TDB)	OR	ON	ON	2022/03/22 07:04 AM
L380	59	L377 AND (@ad<="20100226" OR @rlad<="20100226" OR @pd<="20100226")	(US-PGPUB; USPAT)	OR	ON	ON	2022/03/22 07:05 AM
L381	1	"5379447".pn.	(US-PGPUB; USPAT)	OR	ON	ON	2022/03/22 07:05 AM
L382	1	"20040170136".pn.	(US-PGPUB; USPAT)	OR	ON	ON	2022/03/22 07:07 AM
L383	4	("7260399" OR "8200240" OR "5379447" OR "20040170136").pn.	(US-PGPUB; USPAT)	OR	ON	ON	2022/03/22 07:10 AM
L384	3	L383 AND (UWB OR wideband OR (wide adj2 band) OR wide?band OR 802.11$3 OR bluetooth$3 OR BLU OR zigbee OR Wimax)	(US-PGPUB; USPAT)	OR	ON	ON	2022/03/22 07:11 AM
L385	4	("20090240814" OR "20090156123" OR "20090034591" OR "20090270093").pn.	(US-PGPUB; USPAT)	OR	ON	ON	2022/03/22 07:20 AM
L386	2	L385 AND (gyro$6 OR compass OR orientation)	(US-PGPUB; USPAT)	OR	ON	ON	2022/03/22 07:28 AM
L387	104	("10123161" OR "20020103008" OR "20030052860" OR "20030162574" OR "20030193399" OR "20040009748" OR "20040097127" OR "20040125080" OR "20040167820" OR "20040204074" OR "20050065851" OR	(US-PGPUB; USPAT)	OR	ON	ON	2022/03/22 07:38 AM

		"20050186968" OR "20050231361" OR "20060012488" OR "20060152487" OR "20060152488" OR "20060152489" OR "20060154642" OR "20060259942" OR "20070005840" OR "20070013526" OR "20070021148" OR "20070038785" OR "20070052177" OR "20070060228" OR "20070060384" OR "20070066394" OR "20070077883" OR "20070080933" OR "20070130592" OR "20070136264" OR "20070194925" OR "20070279245" OR "20080001814" OR "20080012824" OR "20080032713" OR "20080052750" OR "20080062120" OR "20080166968" OR "20080218358" OR "20080278445" OR "20090074051" OR "20090207014" OR "20090217335" OR "20090237209" OR "20090240814" OR "20090249247" OR "20090284664" OR "20110210849" OR "20110210959" OR "20110212699" OR "20110212702" OR "20110215921" OR "20120077439" OR "20140194148" OR "20160227362" OR "20180192236" OR "4476469" OR "5146231" OR "5343136" OR "5448261" OR "5497339" OR "5545857" OR "5675524" OR "5714932" OR "5752205" OR "5857148" OR "5857157" OR "5939981" OR					

		"6067018" OR "6172640" OR "6286060" OR "6400270" OR "6446127" OR "6624752" OR "6625472" OR "6774787" OR "6889057" OR "6980546" OR "6995654" OR "7034684" OR "7110789" OR "7266391" OR "7330122" OR "7340260" OR "7375632" OR "7453357" OR "7647511" OR "7690994" OR "7714737" OR "7843427" OR "7912503" OR "8000647" OR "8018726" OR "8078787" OR "8174359" OR "8253559" OR "8253560" OR "8254878" OR "8285248" OR "8422954" OR "8588806" OR "8750928" OR "9295024").pn.					
L388	49	L387 AND (gyro$6 OR compass OR orientation)	(US-PGPUB; USPAT)	OR	ON	ON	2022/03/22 07:47 AM
L389	49	L387 AND (name$1)	(US-PGPUB; USPAT)	OR	ON	ON	2022/03/22 07:55 AM
L390	22	L387 AND ((display$4 OR icon) SAME name$1)	(US-PGPUB; USPAT)	OR	ON	ON	2022/03/22 07:55 AM
L391	62	L387 AND (UWB OR wideband OR (wide adj2 band) OR wide?band OR 802.11$3 OR bluetooth$3 OR BLU OR zigbee OR Wimax)	(US-PGPUB; USPAT)	OR	ON	ON	2022/03/22 08:11 AM
L392	26	L387 AND (UWB OR wideband OR (wide adj2 band) OR wide?band)	(US-PGPUB; USPAT)	OR	ON	ON	2022/03/22 08:11 AM
L393	0	L387 AND ((UWB OR wideband OR (wide	(US-PGPUB; USPAT)	OR	ON	ON	2022/03/22 08:24 AM

		adj2 band) OR wide?band) SAME (TOF OR (time adj2 flight) OR (round adj2 trip) OR round?trip?delay))					
L394	2286	((UWB OR wideband OR (wide adj2 band) OR wide?band) SAME (TOF OR (time adj2 flight) OR (round adj2 trip) OR round?trip?delay))	(US-PGPUB; USPAT)	OR	ON	ON	2022/03/22 08:25 AM
L395	605	L394 AND (@ad<="20100226" OR @rlad<="20100226" OR @pd<="20100226")	(US-PGPUB; USPAT)	OR	ON	ON	2022/03/22 08:25 AM
L396	1634	((distance OR position OR location OR geographic) SAME (UWB OR wideband OR (wide adj2 band) OR wide?band) SAME (TOF OR (time adj2 flight) OR (round adj2 trip) OR round?trip?delay))	(US-PGPUB; USPAT)	OR	ON	ON	2022/03/22 08:26 AM
L397	339	L396 AND (@ad<="20100226" OR @rlad<="20100226" OR @pd<="20100226")	(US-PGPUB; USPAT)	OR	ON	ON	2022/03/22 08:26 AM
L398	1	"8354878"	(US-PGPUB; USPAT)	OR	ON	ON	2022/03/22 09:10 AM
L399	32	"8254878"	(US-PGPUB; USPAT)	OR	ON	ON	2022/03/22 09:10 AM
L400	37	"8588806"	(US-PGPUB; USPAT)	OR	ON	ON	2022/03/22 09:10 AM
L401	1	"8588806".pn.	(US-PGPUB; USPAT)	OR	ON	ON	2022/03/22 09:10 AM
L402	1	L4 and pair$5	(US-PGPUB; USPAT)	OR	ON	ON	2022/03/22 09:10 AM
L403	2	"20160227362"	(US-PGPUB; USPAT)	OR	ON	ON	2022/03/22 09:10 AM
L404	2	L6 and (plac$4 adj3 order)	(US-PGPUB; USPAT)	OR	ON	ON	2022/03/22 09:10 AM
L405	1	"9295024".pn.	(US-PGPUB; USPAT)	OR	ON	ON	2022/03/22 09:10 AM
L406	1	L8 and (plac$4 adj3 order)	(US-PGPUB; USPAT)	OR	ON	ON	2022/03/22 09:10 AM
L407	1	"8768381".pn.	(US-PGPUB; USPAT)	OR	ON	ON	2022/03/22 09:10 AM
L408	1	L10 and (plac$4 adj3 order)	(US-PGPUB; USPAT)	OR	ON	ON	2022/03/22 09:10 AM

L409	1	"8588806".pn.	(US-PGPUB; USPAT)	OR	ON	ON	2022/03/22 09:10 AM
L410	1	L12 and (plac$4 adj3 order)	(US-PGPUB; USPAT)	OR	ON	ON	2022/03/22 09:10 AM
L411	27	"9295024"	(US-PGPUB; USPAT)	OR	ON	ON	2022/03/22 09:10 AM
L412	8	("9295024").URPN.	(USPAT)	OR	ON	ON	2022/03/22 09:10 AM
L413	81	("20020103008" | "20030052860" | "20030162574" | "20030193399" | "20040097127" | "20040125080" | "20040167820" | "20040204074" | "20050186968" | "20050231361" | "20060012488" | "20060152487" | "20060152488" | "20060152489" | "20060154642" | "20060259942" | "20070005840" | "20070013526" | "20070021148" | "20070038785" | "20070052177" | "20070060228" | "20070060384" | "20070066394" | "20070080933" | "20070130592" | "20070136264" | "20070279245" | "20080001814" | "20080012824" | "20080032713" | "20080052750" | "20080062120" | "20080166968" | "20080278445" | "20090217335" | "20090237209" | "20090284664" | "20110210849" | "20110210959" | "20110212699" | "20110212702" | "20120077439" | "4476469" | "5146231" | "5343136" | "5448261" | "5497339" | "5545857" | "5675524" | "5714932" | "5752205" | "5857148" | "5857157" | "6067018" |	(US-PGPUB; USPAT; USOCR)	OR	ON	ON	2022/03/22 09:10 AM

		"6172640" | "6286060" | "6446127" | "6624752" | "6625472" | "6774787" | "6889057" | "6980546" | "7034684" | "7110789" | "7266391" | "7453357" | "7647511" | "7690994" | "7843427" | "7912503" | "8000647" | "8018726" | "8078787" | "8253559" | "8253560" | "8254878" | "8285248" | "8422954" | "8588806" | "8750928").PN.					
L414	108	L14 or L16	(US-PGPUB; USPAT)	OR	ON	ON	2022/03/22 09:10 AM
L415	31	"8768381"	(US-PGPUB; USPAT)	OR	ON	ON	2022/03/22 09:10 AM
L416	1	("8588806").PN.	(US-PGPUB; USPAT; USOCR)	OR	ON	ON	2022/03/22 09:10 AM
L417	113	L17 or L18	(US-PGPUB; USPAT)	OR	ON	ON	2022/03/22 09:10 AM
L418	1	"8588806".pn.	(US-PGPUB; USPAT)	OR	ON	ON	2022/03/22 09:10 AM
L419	28	("20050186968" | "20050231361" | "20060012488" | "20060152487" | "20060152488" | "20060152489" | "20060154642" | "20070013526" | "20070052177" | "20070060228" | "20070060384" | "20070066394" | "20080012824" | "20080032713" | "20080052750" | "20080166968" | "20080278445" | "20090217335" | "20090237209" | "20090284664" | "20110210849" | "4476469" | "5146231" | "6889057" | "7110789" | "7690994" | "8000647" | "8078787").PN.	(US-PGPUB; USPAT; USOCR)	OR	ON	ON	2022/03/22 09:10 AM
L420	37	"8588806"	(US-PGPUB; USPAT)	OR	ON	ON	2022/03/22 09:10 AM
L421	119	L20 or L22 or L23	(US-PGPUB; USPAT)	OR	ON	ON	2022/03/22 09:10 AM
L422	100	L24 and order	(US-PGPUB; USPAT)	OR	ON	ON	2022/03/22 09:10 AM

L423	36	L24 and (plac$4 adj2 order)	(US-PGPUB; USPAT)	OR	ON	ON	2022/03/22 09:10 AM
L424	2	L6 and (plac$4 adj3 order)	(US-PGPUB; USPAT)	OR	ON	ON	2022/03/22 09:10 AM
L425	2	L6 and (download$4)	(US-PGPUB; USPAT)	OR	ON	ON	2022/03/22 09:10 AM
L426	2	L6 and (attach$4 near7 object)	(US-PGPUB; USPAT)	OR	ON	ON	2022/03/22 09:10 AM
L427	2	L6 and (housing)	(US-PGPUB; USPAT)	OR	ON	ON	2022/03/22 09:10 AM
L428	0	L6 and (housing same opening)	(US-PGPUB; USPAT)	OR	ON	ON	2022/03/22 09:10 AM
L429	2	L6 and (attach$6)	(US-PGPUB; USPAT)	OR	ON	ON	2022/03/22 09:10 AM
L430	2	L6 and (light)	(US-PGPUB; USPAT)	OR	ON	ON	2022/03/22 09:10 AM
L431	2	L6 and (touch adj2 screen)	(US-PGPUB; USPAT)	OR	ON	ON	2022/03/22 09:10 AM
L432	2	L6 and (display)	(US-PGPUB; USPAT)	OR	ON	ON	2022/03/22 09:10 AM
L433	1	"8588506".pn.	(US-PGPUB; USPAT)	OR	ON	ON	2022/03/22 09:10 AM
L434	41	L24 and (thumb adj2 wheel)	(US-PGPUB; USPAT)	OR	ON	ON	2022/03/22 09:10 AM
L435	73	L24 and (pair$4)	(US-PGPUB; USPAT)	OR	ON	ON	2022/03/22 09:10 AM
L436	4	("20060035205" | "20080040502" | "20080272905" | "5956696").PN.	(US-PGPUB; USPAT; USOCR)	OR	ON	ON	2022/03/22 09:10 AM
L437	1	"20160227362".pn.	(US-PGPUB; USPAT; USOCR)	OR	ON	ON	2022/03/22 09:10 AM
L438	1	L40 and pair$5	(US-PGPUB; USPAT; USOCR)	OR	ON	ON	2022/03/22 09:10 AM
L439	1	"8254878".pn.	(US-PGPUB; USPAT; USOCR)	OR	ON	ON	2022/03/22 09:10 AM
L440	1	"8253559".pn.	(US-PGPUB; USPAT; USOCR)	OR	ON	ON	2022/03/22 09:10 AM
L441	32	"8253560"	(US-PGPUB; USPAT; USOCR)	OR	ON	ON	2022/03/22 09:10 AM
L442	21	"8285248"	(US-PGPUB; USPAT; USOCR)	OR	ON	ON	2022/03/22 09:10 AM
L443	8	"8422954"	(US-PGPUB; USPAT; USOCR)	OR	ON	ON	2022/03/22 09:10 AM
L444	2	L6 and (generat$5 adj2 pair$4 adj2 signal)	(US-PGPUB; USPAT; USOCR)	OR	ON	ON	2022/03/22 09:10 AM
L445	3477	(generat$5 adj2 pair$4 adj2 signal)	(US-PGPUB; USPAT; USOCR)	OR	ON	ON	2022/03/22 09:10 AM
L446	2	L6 and (order)	(US-PGPUB; USPAT)	OR	ON	ON	2022/03/22 09:10 AM

L447	99	restaurant same (paging adj2 device)	(US-PGPUB; USPAT)	OR	ON	ON	2022/03/22 09:10 AM
L448	90	L50 and (@ad<="20100226" or @rlad<="20100226" or @pd<="20100226")	(US-PGPUB; USPAT)	OR	ON	ON	2022/03/22 09:10 AM
L449	4	("20060035205" | "20080040502" | "20080272905" | "5956696").PN.	(US-PGPUB; USPAT; USOCR)	OR	ON	ON	2022/03/22 09:10 AM
L450	0	L48 same pager	(US-PGPUB; USPAT)	OR	ON	ON	2022/03/22 09:10 AM
L451	9	(pair$4 adj2 signal) same pager	(US-PGPUB; USPAT; USOCR)	OR	ON	ON	2022/03/22 09:10 AM
L452	1495	(pair$4 same pager)	(US-PGPUB; USPAT; USOCR)	OR	ON	ON	2022/03/22 09:10 AM
L453	90	L55 and restaurant	(US-PGPUB; USPAT; USOCR)	OR	ON	ON	2022/03/22 09:10 AM
L454	58	L56 and (@ad<="20100226" or @rlad<="20100226" or @pd<="20100226")	(US-PGPUB; USPAT)	OR	ON	ON	2022/03/22 09:10 AM
L455	982	L55 and (@ad<="20100226" or @rlad<="20100226" or @pd<="20100226")	(US-PGPUB; USPAT)	OR	ON	ON	2022/03/22 09:10 AM
L456	130	(pair$4 near7 pager$1)	(US-PGPUB; USPAT; USOCR)	OR	ON	ON	2022/03/22 09:10 AM
L457	88	L59 and (@ad<="20100226" or @rlad<="20100226" or @pd<="20100226")	(US-PGPUB; USPAT)	OR	ON	ON	2022/03/22 09:10 AM
L458	2	"20160227362"	(US-PGPUB; USPAT)	OR	ON	ON	2022/03/22 09:10 AM
L459	2	L61 and (pairing near3 signal$1)	(US-PGPUB; USPAT)	OR	ON	ON	2022/03/22 09:10 AM
L460	2	L61 and (pair$5)	(US-PGPUB; USPAT)	OR	ON	ON	2022/03/22 09:10 AM
L461	2	L61 and (short-range or (short adj2 range))	(US-PGPUB; USPAT)	OR	ON	ON	2022/03/22 09:10 AM
L462	8	(US-20070080933-$ or US-20110081866-$ or US-20080094185-$ or US-20050065851-$ or US-20030088469-$).did. or (US-8078787-$ or US-8174359-$ or US-6681109-$).did.	(US-PGPUB; USPAT)	OR	ON	ON	2022/03/22 09:10 AM
L463	3	L65 and (pair$5 or sync$9)	(US-PGPUB; USPAT)	OR	ON	ON	2022/03/22 09:10 AM
L464	2	"20080320190"	(US-PGPUB; USPAT)	OR	ON	ON	2022/03/22 09:10 AM

L465	9	(US-20070080933-$ or US-20110081866-$ or US-20080094185-$ or US-20050065851-$ or US-20030088469-$ or US-20080320190-$).did. or (US-8078787-$ or US-8174359-$ or US-6681109-$).did.	(US-PGPUB; USPAT)	OR	ON	ON	2022/03/22 09:10 AM
L466	6	L68 and (pair$5 or sync$6 or blu or bluetooth$4)	(US-PGPUB; USPAT)	OR	ON	ON	2022/03/22 09:10 AM
L467	673	((blu or bluetooth$4) near3 pair$4) same ((press$4 or hold$4) near3 button)	(US-PGPUB; USPAT)	OR	ON	ON	2022/03/22 09:10 AM
L468	106	L70 and (@ad<="20100226" or @rlad<="20100226" or @pd<="20100226")	(US-PGPUB; USPAT)	OR	ON	ON	2022/03/22 09:10 AM
L469	6	L71 and restaurant	(US-PGPUB; USPAT)	OR	ON	ON	2022/03/22 09:10 AM
L470	0	L71 and "20080320190"	(US-PGPUB; USPAT)	OR	ON	ON	2022/03/22 09:10 AM
L471	1168	((blu or bluetooth$4) near3 pair$4) same (((press$4 or hold$4) near3 button) or (prompt$4 near3 user))	(US-PGPUB; USPAT)	OR	ON	ON	2022/03/22 09:10 AM
L472	1266	((blu or bluetooth$4) near3 pair$4) same (((press$4 or hold$4) near3 button) or ((prompt$4 or quer$5 or ask$4) near3 user))	(US-PGPUB; USPAT)	OR	ON	ON	2022/03/22 09:10 AM
L473	189	L75 and (@ad<="20100226" or @rlad<="20100226" or @pd<="20100226")	(US-PGPUB; USPAT)	OR	ON	ON	2022/03/22 09:10 AM
L474	15	L76 and (restaurant or (plac$4 adj2 order) or waitress)	(US-PGPUB; USPAT)	OR	ON	ON	2022/03/22 09:10 AM
L475	2	L75 and "20080320190"	(US-PGPUB; USPAT)	OR	ON	ON	2022/03/22 09:10 AM
L476	1656	((blu or bluetooth$4) near7 pair$4) same (((press$4 or hold$4) near3 button) or ((prompt$4 or quer$5 or ask$4) near3 user))	(US-PGPUB; USPAT)	OR	ON	ON	2022/03/22 09:10 AM
L477	158	L79 and (restaurant or (plac$4 adj2 order) or waitress)	(US-PGPUB; USPAT)	OR	ON	ON	2022/03/22 09:10 AM
L478	262	L79 and	(US-PGPUB; USPAT)	OR	ON	ON	2022/03/22

		(@ad<="20100226" or @rlad<="20100226" or @pd<="20100226")					09:10 AM
L479	15	L81 and (restaurant or (plac$4 adj2 order) or waitress)	(US-PGPUB; USPAT)	OR	ON	ON	2022/03/22 09:10 AM
L480	1	"20090074951".pn.	(US-PGPUB; USPAT)	OR	ON	ON	2022/03/22 09:10 AM
L481	1	L83 and (position or location or gps or latitude)	(US-PGPUB; USPAT)	OR	ON	ON	2022/03/22 09:10 AM
L482	2	"20090074051"	(US-PGPUB; USPAT)	OR	ON	ON	2022/03/22 09:10 AM
L483	2	L85 and (position or location or gps or latitude)	(US-PGPUB; USPAT)	OR	ON	ON	2022/03/22 09:10 AM
L484	2	L85 and (headset)	(US-PGPUB; USPAT)	OR	ON	ON	2022/03/22 09:10 AM
L485	2	L85 and (display)	(US-PGPUB; USPAT)	OR	ON	ON	2022/03/22 09:10 AM
L486	2	L85 and (headset)	(US-PGPUB; USPAT)	OR	ON	ON	2022/03/22 09:10 AM
L487	2	"20160227362"	(US-PGPUB; USPAT)	OR	ON	ON	2022/03/22 09:10 AM
L488	56116	(G08B13/1427 OR G08B21/0244 OR G08B21/0247 OR G08B21/0269 OR G08B21/0272 OR G08B21/0277 OR G08B25/016 OR H04L41/0618 OR H04W4/008 OR H04W4/02 OR H04W4/20 OR H04W64/00).CPC.	(US-PGPUB; USPAT)	OR	ON	ON	2022/03/22 09:10 AM
L489	1	"20040167820"	(US-PGPUB; USPAT)	OR	ON	ON	2022/03/22 09:10 AM
L490	1	L92 and order$5	(US-PGPUB; USPAT)	OR	ON	ON	2022/03/22 09:10 AM
L491	1	"20090240814"	(US-PGPUB; USPAT)	OR	ON	ON	2022/03/22 09:10 AM
L492	1	L94 and (pda or pager)	(US-PGPUB; USPAT)	OR	ON	ON	2022/03/22 09:10 AM
L493	2	"20160227362"	(US-PGPUB; USPAT)	OR	ON	ON	2022/03/22 09:10 AM
L494	2	L96 and (down or download$5)	(US-PGPUB; USPAT)	OR	ON	ON	2022/03/22 09:10 AM
L495	12279	(select$5 near7 (app or application$1) near7 (download$4 or (down adj2 load$4)))	(US-PGPUB; USPAT)	OR	ON	ON	2022/03/22 09:10 AM

L496	14	(US-20070080933-$ or US-20110081866-$ or US-20080094185-$ or US-20050065851-$ or US-20030088469-$ or US-20080320190-$ or US-20090074051-$ or US-20070141989-$ or US-20090270036-$ or US-20090240814-$ or US-20090058663-$).did. or (US-8078787-$ or US-8174359-$ or US-6681109-$).did.	(US-PGPUB; USPAT)	OR	ON	ON	2022/03/22 09:10 AM
L497	0	L98 and L99	(US-PGPUB; USPAT)	OR	ON	ON	2022/03/22 09:10 AM
L498	3826	L98 and (@ad<="20100226" or @rlad<="20100226" or @pd<="20100226")	(US-PGPUB; USPAT)	OR	ON	ON	2022/03/22 09:10 AM
L499	19458	((blu or bluetooth$4 or wifi or wi-fi or (blude adj2 tooth)) near3 pair$4)	(US-PGPUB; USPAT)	OR	ON	ON	2022/03/22 09:10 AM
L500	27402	((blu or bluetooth$4 or wifi or wi-fi or (blude adj2 tooth)) near7 pair$4)	(US-PGPUB; USPAT)	OR	ON	ON	2022/03/22 09:10 AM
L501	102	L101 and L103	(US-PGPUB; USPAT)	OR	ON	ON	2022/03/22 09:10 AM
L502	16	(US-20070080933-$ or US-20110081866-$ or US-20080094185-$ or US-20050065851-$ or US-20030088469-$ or US-20080320190-$ or US-20090074051-$ or US-20070141989-$ or US-20090270036-$ or US-20090240814-$ or US-20090058663-$ or US-20090249247-$ or US-20070080934-$).did. or (US-8078787-$ or US-8174359-$ or US-6681109-$).did.	(US-PGPUB; USPAT)	OR	ON	ON	2022/03/22 09:10 AM
L503	9	L105 and (attach$5 or clip$5 or ring$5 or fastener)	(US-PGPUB; USPAT)	OR	ON	ON	2022/03/22 09:10 AM
L504	1	L105 and "20070080933"	(US-PGPUB; USPAT)	OR	ON	ON	2022/03/22 09:10 AM
L505	1235	(pager and ((form adj2 factor) same (attached or clipped or ring)))	(US-PGPUB; USPAT)	OR	ON	ON	2022/03/22 09:10 AM

L506	32	L103 and L108	(US-PGPUB; USPAT)	OR	ON	ON	2022/03/22 09:10 AM
L507	5705	(pager same (attached or clipped or ring))	(US-PGPUB; USPAT)	OR	ON	ON	2022/03/22 09:10 AM
L508	82	L103 and L110	(US-PGPUB; USPAT)	OR	ON	ON	2022/03/22 09:10 AM
L509	51	L111 and (@ad<="20100226" or @rlad<="20100226" or @pd<="20100226")	(US-PGPUB; USPAT)	OR	ON	ON	2022/03/22 09:10 AM
L510	1715	(pager same (keychain or keyring or (key adj2 (ring or chain))))	(US-PGPUB; USPAT)	OR	ON	ON	2022/03/22 09:10 AM
L511	54	L103 and L113	(US-PGPUB; USPAT)	OR	ON	ON	2022/03/22 09:10 AM
L512	62	L103 same (keychain or keyring or (key adj2 (ring or chain)))	(US-PGPUB; USPAT)	OR	ON	ON	2022/03/22 09:10 AM
L513	26	L115 and (@ad<="20100226" or @rlad<="20100226" or @pd<="20100226")	(US-PGPUB; USPAT)	OR	ON	ON	2022/03/22 09:10 AM
L514	18	(US-20070080933-$ or US-20110081866-$ or US-20080094185-$ or US-20050065851-$ or US-20030088469-$ or US-20080320190-$ or US-20090074051-$ or US-20070141989-$ or US-20090270036-$ or US-20090240814-$ or US-20090058663-$ or US-20090249247-$ or US-20070080934-$ or US-20110215921-$ or US-20060199538-$).did. or (US-8078787-$ or US-8174359-$ or US-6681109-$).did.	(US-PGPUB; USPAT)	OR	ON	ON	2022/03/22 09:10 AM
L515	1	L117 and ((led or light or (light adj2 emitting adj2 diode)) same (push adj2 button$1))	(US-PGPUB; USPAT)	OR	ON	ON	2022/03/22 09:10 AM
L516	2	"20160227362"	(US-PGPUB; USPAT)	OR	ON	ON	2022/03/22 09:10 AM
L517	2	L119 and (pair$5 same (remote adj4 device))	(US-PGPUB; USPAT)	OR	ON	ON	2022/03/22 09:10 AM
L518	2	L119 and (paging adj2 device)	(US-PGPUB; USPAT)	OR	ON	ON	2022/03/22 09:10 AM
L519	2	L119 and (attach$5 or opening)	(US-PGPUB; USPAT)	OR	ON	ON	2022/03/22 09:10 AM
L520	1	"20090240814"	(US-PGPUB; USPAT)	OR	ON	ON	2022/03/22

							09:10 AM
L521	0	L123 and transceiver	(US-PGPUB; USPAT)	OR	ON	ON	2022/03/22 09:10 AM
L522	1	"20040167820".pn.	(US-PGPUB; USPAT)	OR	ON	ON	2022/03/22 09:10 AM
L523	1	L125 and (phone or cell or cellular or smartphone)	(US-PGPUB; USPAT)	OR	ON	ON	2022/03/22 09:10 AM
L524	18	(US-20070080933-$ or US-20110081866-$ or US-20080094185-$ or US-20050065851-$ or US-20030088469-$ or US-20080320190-$ or US-20090074051-$ or US-20070141989-$ or US-20090270036-$ or US-20090240814-$ or US-20090058663-$ or US-20090249247-$ or US-20070080934-$ or US-20110215921-$ or US-20060199538-$).did. or (US-8078787-$ or US-8174359-$ or US-6681109-$).did.	(US-PGPUB; USPAT)	OR	ON	ON	2022/03/22 09:10 AM
L525	4	L127 and (form adj2 factor)	(US-PGPUB; USPAT)	OR	ON	ON	2022/03/22 09:10 AM
L526	3	L128 and (pair$5 or bluetooth$5)	(US-PGPUB; USPAT)	OR	ON	ON	2022/03/22 09:10 AM
L527	2	L127 and (button same led)	(US-PGPUB; USPAT)	OR	ON	ON	2022/03/22 09:10 AM
L528	14	"9942700"	(US-PGPUB; USPAT)	OR	ON	ON	2022/03/22 09:10 AM
L529	14	"9942700"	(US-PGPUB; USPAT)	OR	ON	ON	2022/03/22 09:10 AM
L530	56116	(G08B13/1427 OR G08B21/0244 OR G08B21/0247 OR G08B21/0269 OR G08B21/0272 OR G08B21/0277 OR G08B25/016 OR H04L41/0618 OR H04W4/008 OR H04W4/02 OR H04W4/20 OR H04W64/00).CPC.	(US-PGPUB; USPAT)	OR	ON	ON	2022/03/22 09:10 AM
L531	7	L133 and (((blu or bluetooth$4 or wifi or wi-fi or (blude adj2 tooth)) near7 pair$4) same (keychain or keyring or (key adj2	(US-PGPUB; USPAT)	OR	ON	ON	2022/03/22 09:10 AM

		(ring or chain))))					
L532	12	"10123161"	(US-PGPUB; USPAT)	OR	ON	ON	2022/03/22 09:10 AM
L533	1	"10123161".pn.	(US-PGPUB; USPAT)	OR	ON	ON	2022/03/22 09:10 AM
L534	18	(US-20070080933-$ or US-20110081866-$ or US-20080094185-$ or US-20050065851-$ or US-20030088469-$ or US-20080320190-$ or US-20090074051-$ or US-20070141989-$ or US-20090270036-$ or US-20090240814-$ or US-20090058663-$ or US-20090249247-$ or US-20070080934-$ or US-20110215921-$ or US-20060199538-$).did. or (US-8078787-$ or US-8174359-$ or US-6681109-$).did.	(US-PGPUB; USPAT)	OR	ON	ON	2022/03/22 09:10 AM
L535	1	L137 and (web$5 adj3 server)	(US-PGPUB; USPAT)	OR	ON	ON	2022/03/22 09:10 AM
L536	10	L137 and (server)	(US-PGPUB; USPAT)	OR	ON	ON	2022/03/22 09:10 AM
L537	1	L137 and (download$5 same server)	(US-PGPUB; USPAT)	OR	ON	ON	2022/03/22 09:10 AM
L538	1	"20050065851"	(US-PGPUB; USPAT)	OR	ON	ON	2022/03/22 09:10 AM
L539	0	L141 and distance	(US-PGPUB; USPAT)	OR	ON	ON	2022/03/22 09:10 AM
L540	1	L141 and (location or position)	(US-PGPUB; USPAT)	OR	ON	ON	2022/03/22 09:10 AM
L541	0	"200190037340"	(US-PGPUB; USPAT)	OR	ON	ON	2022/03/22 09:10 AM
L542	2	"20190037340"	(US-PGPUB; USPAT)	OR	ON	ON	2022/03/22 09:10 AM
L543	68602	(G08B13/1427 OR H04W4/02 OR H04W4/80).CPC.	(US-PGPUB; USPAT)	OR	ON	ON	2022/03/22 09:10 AM
L544	2	"20180192236"	(US-PGPUB; USPAT)	OR	ON	ON	2022/03/22 09:10 AM
L545	1	"20050065851"	(US-PGPUB; USPAT)	OR	ON	ON	2022/03/22 09:10 AM
L546	54	"2005/0065851"	(US-PGPUB; USPAT)	OR	ON	ON	2022/03/22 09:10 AM
L547	2	"20190037340"	(US-PGPUB; USPAT)	OR	ON	ON	2022/03/22 09:10 AM
L548	56116	(G08B13/1427 OR G08B21/0244 OR	(US-PGPUB; USPAT)	OR	ON	ON	2022/03/22 09:10 AM

		G08B21/0247 OR G08B21/0269 OR G08B21/0272 OR G08B21/0277 OR G08B25/016 OR H04L41/0618 OR H04W4/008 OR H04W4/02 OR H04W4/20 OR H04W64/00).CPC.					
L549	7	L151 and (((blu or bluetooth$4 or wifi or wi-fi or (blude adj2 tooth)) near7 pair$4) same (keychain or keyring or (key adj2 (ring or chain))))	(US-PGPUB; USPAT)	OR	ON	ON	2022/03/22 09:10 AM
L550	7	L151 and (((blu or bluetooth$4 or wifi or wi-fi or (blue adj2 tooth)) near7 pair$4) same (keychain or keyring or (key adj2 (ring or chain))))	(US-PGPUB; USPAT)	OR	ON	ON	2022/03/22 09:10 AM
L551	88541	(G08B13/1427 OR G08B21/0244 OR G08B21/0247 OR G08B21/0269 OR G08B21/0272 OR G08B21/0277 OR G08B25/016 OR H04L41/0618 OR H04W4/80 OR H04W4/02 OR H04W4/20 OR H04W64/00).CPC.	(US-PGPUB; USPAT)	OR	ON	ON	2022/03/22 09:10 AM
L552	1266	((blu or bluetooth$4) near3 pair$4) same (((press$4 or hold$4) near3 button) or ((prompt$4 or quer$5 or ask$4) near3 user))	(US-PGPUB; USPAT)	OR	ON	ON	2022/03/22 09:10 AM
L553	27476	((blu or bluetooth$4 or wifi or wi-fi or (blue adj2 tooth)) near7 pair$4)	(US-PGPUB; USPAT)	OR	ON	ON	2022/03/22 09:10 AM
L554	6315	L154 and L156	(US-PGPUB; USPAT)	OR	ON	ON	2022/03/22 09:10 AM
L555	22	L154 and (((blu or bluetooth$4 or wifi or wi-fi or (blue adj2 tooth)) near7 pair$4) same (keychain or keyring or (key adj2 (ring or chain))))	(US-PGPUB; USPAT)	OR	ON	ON	2022/03/22 09:10 AM
L556	3	L158 and	(US-PGPUB; USPAT)	OR	ON	ON	2022/03/22

		(@ad<="20100226" or @rlad<="20100226" or @pd<="20100226")					09:10 AM
L557	552	L157 and (@ad<="20100226" or @rlad<="20100226" or @pd<="20100226")	(US-PGPUB; USPAT)	OR	ON	ON	2022/03/22 09:10 AM
L558	37	L160 and (web adj2 server)	(US-PGPUB; USPAT)	OR	ON	ON	2022/03/22 09:10 AM
L559	2	"20190373418"	(US-PGPUB; USPAT)	OR	ON	ON	2022/03/22 09:10 AM
L560	87970	(G08B13/1427 OR G08B21/0244 OR G08B21/0247 OR G08B21/0269 OR G08B21/0272 OR G08B21/0277 OR G08B25/016 OR H04L41/0618 OR H04W4/024 OR H04W4/029 OR H04W4/80 OR H04W64/00).CPC.	(US-PGPUB; USPAT)	OR	ON	ON	2022/03/22 09:10 AM
L561	22	L163 and (((blu or bluetooth$4 or wifi or wi-fi or (blude adj2 tooth)) near7 pair$4) same (keychain or keyring or (key adj2 (ring or chain))))	(US-PGPUB; USPAT)	OR	ON	ON	2022/03/22 09:10 AM
L562	3	L164 and (@ad<="20100226" or @rlad<="20100226" or @pd<="20100226")	(US-PGPUB; USPAT)	OR	ON	ON	2022/03/22 09:10 AM
L563	12279	(select$5 near7 (app or application) near7 (download$4 or (down adj2 load$4)))	(US-PGPUB; USPAT)	OR	ON	ON	2022/03/22 09:10 AM
L564	3826	L166 and (@ad<="20100226" or @rlad<="20100226" or @pd<="20100226")	(US-PGPUB; USPAT)	OR	ON	ON	2022/03/22 09:10 AM
L565	27476	((blu or bluetooth$4 or wifi or wi-fi or (blue adj2 tooth)) near7 pair$4)	(US-PGPUB; USPAT)	OR	ON	ON	2022/03/22 09:10 AM
L566	102	L167 and L168	(US-PGPUB; USPAT)	OR	ON	ON	2022/03/22 09:10 AM
L567	102	L169 and (distance or location or locate or find)	(US-PGPUB; USPAT)	OR	ON	ON	2022/03/22 09:10 AM
L568	10	L169 and ((paged or paging or page or probe) same (distance or location or locate or	(US-PGPUB; USPAT)	OR	ON	ON	2022/03/22 09:10 AM

		find))					
L569	32	"8254878"	(US-PGPUB; USPAT)	OR	ON	ON	2022/03/22 09:10 AM
L570	0	"8254878"".pn.",	(US-PGPUB; USPAT)	OR	ON	ON	2022/03/22 09:10 AM
L571	0	"8254878"".pn."	(US-PGPUB; USPAT)	OR	ON	ON	2022/03/22 09:10 AM
L572	1	"8254878".pn.	(US-PGPUB; USPAT)	OR	ON	ON	2022/03/22 09:10 AM
L573	22	L172 and (emit$5 or sound or alert$5 or audible or audio).clm.	(US-PGPUB; USPAT)	OR	ON	ON	2022/03/22 09:10 AM
L574	133	"8253559"	(US-PGPUB; USPAT)	OR	ON	ON	2022/03/22 09:10 AM
L575	1	"8253559".pn.	(US-PGPUB; USPAT)	OR	ON	ON	2022/03/22 09:10 AM
L576	1	L178 and (emit$5 or sound or alert$5 or audible or audio).clm.	(US-PGPUB; USPAT)	OR	ON	ON	2022/03/22 09:10 AM
L577	30	L177 and (emit$5 or sound or alert$5 or audible or audio).clm.	(US-PGPUB; USPAT)	OR	ON	ON	2022/03/22 09:10 AM
L578	32	"8253560"	(US-PGPUB; USPAT)	OR	ON	ON	2022/03/22 09:10 AM
L579	1	"8253560".pn.	(US-PGPUB; USPAT)	OR	ON	ON	2022/03/22 09:10 AM
L580	1	L182 and (emit$5 or sound or alert$5 or audible or audio).clm.	(US-PGPUB; USPAT)	OR	ON	ON	2022/03/22 09:10 AM
L581	25	L181 and (emit$5 or sound or alert$5 or audible or audio).clm.	(US-PGPUB; USPAT)	OR	ON	ON	2022/03/22 09:10 AM
L582	18	(US-20070080933-$ or US-20110081866-$ or US-20080094185-$ or US-20050065851-$ or US-20030088469-$ or US-20080320190-$ or US-20090074051-$ or US-20070141989-$ or US-20090270036-$ or US-20090240814-$ or US-20090058663-$ or US-20090249247-$ or US-20070080934-$ or US-20110215921-$ or US-20060199538-$).did. or (US-8078787-$ or US-8174359-$ or US-6681109-$).did.	(US-PGPUB; USPAT)	OR	ON	ON	2022/03/22 09:10 AM
L583	16	L185 and (emit$5 or sound or alert$5 or audible or audio)	(US-PGPUB; USPAT)	OR	ON	ON	2022/03/22 09:10 AM

L584	21	"8285248"	(US-PGPUB; USPAT)	OR	ON	ON	2022/03/22 09:10 AM
L585	1	"8285248".pn.	(US-PGPUB; USPAT)	OR	ON	ON	2022/03/22 09:10 AM
L586	1	L188 and (emit$5 or sound or alert$5 or audible or audio)	(US-PGPUB; USPAT)	OR	ON	ON	2022/03/22 09:10 AM
L587	0	L188 and (emit$5 or sound or alert$5 or audible or audio).clm.	(US-PGPUB; USPAT)	OR	ON	ON	2022/03/22 09:10 AM
L588	21	L187 and (emit$5 or sound or alert$5 or audible or audio)	(US-PGPUB; USPAT)	OR	ON	ON	2022/03/22 09:10 AM
L589	8	"8422954"	(US-PGPUB; USPAT)	OR	ON	ON	2022/03/22 09:10 AM
L590	1	"8422954".pn.	(US-PGPUB; USPAT)	OR	ON	ON	2022/03/22 09:10 AM
L591	1	L193 and (emit$5 or sound or alert$5 or audible or audio)	(US-PGPUB; USPAT)	OR	ON	ON	2022/03/22 09:10 AM
L592	0	L193 and (emit$5 or sound or alert$5 or audible or audio).clm.	(US-PGPUB; USPAT)	OR	ON	ON	2022/03/22 09:10 AM
L593	7	L192 and (emit$5 or sound or alert$5 or audible or audio)	(US-PGPUB; USPAT)	OR	ON	ON	2022/03/22 09:10 AM
L594	2	"12713350"	(US-PGPUB; USPAT)	OR	ON	ON	2022/03/22 09:10 AM
L595	2	"20110210959"	(US-PGPUB; USPAT)	OR	ON	ON	2022/03/22 09:10 AM
L596	2	L198 and (emit$5 or sound or alert$5 or audible or audio).clm.	(US-PGPUB; USPAT)	OR	ON	ON	2022/03/22 09:10 AM
L597	24	"2011/0210959"	(US-PGPUB; USPAT)	OR	ON	ON	2022/03/22 09:10 AM
L598	24	L200 and (emit$5 or sound or alert$5 or audible or audio)	(US-PGPUB; USPAT)	OR	ON	ON	2022/03/22 09:10 AM
L599	2	"13309728"	(US-PGPUB; USPAT)	OR	ON	ON	2022/03/22 09:10 AM
L600	31	(((blu or bluetooth$4 or wifi or wi-fi or (blude adj2 tooth)) near7 pair$4) same (keychain or keyring or (key adj2 (ring or chain))) same (sound or alarm or alert or audible or audio))	(US-PGPUB; USPAT)	OR	ON	ON	2022/03/22 09:10 AM
L601	2	"20100323657"	(US-PGPUB; USPAT)	OR	ON	ON	2022/03/22 09:10 AM
L602	1	L204 and alert	(US-PGPUB; USPAT)	OR	ON	ON	2022/03/22 09:10 AM

L603	4	"20120077439"	(US-PGPUB; USPAT)	OR	ON	ON	2022/03/22 09:10 AM
L604	53	(((blu or bluetooth$4 or wifi or wi-fi or (blue adj2 tooth)) same pair$4) same (keychain or keyring or (key adj2 (ring or chain))) same (sound or alarm or alert or audible or audio))	(US-PGPUB; USPAT)	OR	ON	ON	2022/03/22 09:10 AM
L605	23	L207 and (@ad<="20100226" or @rlad<="20100226" or @pd<="20100226")	(US-PGPUB; USPAT)	OR	ON	ON	2022/03/22 09:10 AM
L606	82	((page or paged or paging) same (keychain or keyring or (key adj2 (ring or chain))) same (sound or alarm or alert or audible or audio))	(US-PGPUB; USPAT)	OR	ON	ON	2022/03/22 09:10 AM
L607	80	L209 and (@ad<="20100226" or @rlad<="20100226" or @pd<="20100226")	(US-PGPUB; USPAT)	OR	ON	ON	2022/03/22 09:10 AM
L608	0	"20099297014"	(US-PGPUB; USPAT)	OR	ON	ON	2022/03/22 09:10 AM
L609	1	"20090207014"	(US-PGPUB; USPAT)	OR	ON	ON	2022/03/22 09:10 AM
L610	1	L212 and (emit$5 or sound or alert$5 or audible or audio or alarm)	(US-PGPUB; USPAT)	OR	ON	ON	2022/03/22 09:10 AM
L611	30	"12713346"	(US-PGPUB; USPAT)	OR	ON	ON	2022/03/22 09:10 AM
L612	2	"20110210849"	(US-PGPUB; USPAT)	OR	ON	ON	2022/03/22 09:10 AM
L613	2	L215 and (emit$5 or sound or alert$5 or audible or audio or alarm)	(US-PGPUB; USPAT)	OR	ON	ON	2022/03/22 09:10 AM
L614	1	"7714737".pn.	(US-PGPUB; USPAT)	OR	ON	ON	2022/03/22 09:10 AM
L615	1	L217 and (emit$5 or sound or alert$5 or audible or audio)	(US-PGPUB; USPAT)	OR	ON	ON	2022/03/22 09:10 AM
L616	1	L217 and (keychain or (key adj2 chain))	(US-PGPUB; USPAT)	OR	ON	ON	2022/03/22 09:10 AM
L617	4154	((lost or find) same (page or paged or paging) same (sound or alarm or alert or audible or audio))	(US-PGPUB; USPAT)	OR	ON	ON	2022/03/22 09:10 AM
L618	2873	L220 and	(US-PGPUB; USPAT)	OR	ON	ON	2022/03/22

		(@ad<="20100226" or @rlad<="20100226" or @pd<="20100226")					09:10 AM
L619	1240	((lost or find) same ((page or paged or paging) near7 (sound or alarm or alert or audible or audio)))	(US-PGPUB; USPAT)	OR	ON	ON	2022/03/22 09:10 AM
L620	910	L222 and (@ad<="20100226" or @rlad<="20100226" or @pd<="20100226")	(US-PGPUB; USPAT)	OR	ON	ON	2022/03/22 09:10 AM
L621	17	L222 same pair$6	(US-PGPUB; USPAT)	OR	ON	ON	2022/03/22 09:10 AM
L622	324	((lost or misplaced) same ((page or paged or paging) near7 (sound or alarm or alert or audible or audio)))	(US-PGPUB; USPAT)	OR	ON	ON	2022/03/22 09:10 AM
L623	257	L225 and (@ad<="20100226" or @rlad<="20100226" or @pd<="20100226")	(US-PGPUB; USPAT)	OR	ON	ON	2022/03/22 09:10 AM
L624	183	L226 and (key or keychain)	(US-PGPUB; USPAT)	OR	ON	ON	2022/03/22 09:10 AM
L625	41	L226 and (key-chain or keychain)	(US-PGPUB; USPAT)	OR	ON	ON	2022/03/22 09:10 AM
L626	90	("10123161"|"20020103008"|"20030052860"|"20030162574"|"20030193399"|"20040097127"|"20040125080"|"20040167820"|"20040204074"|"20050065851"|"20050186968"|"20050231361"|"20060012488"|"20060152487"|"20060152488"|"20060152489"|"20060154642"|"20060259942"|"20070005840"|"20070013526"|"20070021148"|"20070038785"|"20070052177"|"20070060228"|"20070060384"|"20070066394"|"20070080933"|"20070130592"|"20070136264"|"20070279245"|"20080001814"|"20080012824"|"20080032713"|"20080055750"|"20080062120"|"20080166968"|"20080278445"|"20090074051"|"20090217335"|"20090237209"|"20090240814"|"2	(US-PGPUB; USPAT)	OR	ON	ON	2022/03/22 09:10 AM

		0090249247"|"2009028 4664"|"20110210849"|" 20110210959"|"201102 12699"|"20110212702"| "20110215921"|"20120 077439"|"20160227362 "|"20180192236"|"4476 469"|"5146231"|"53431 36"|"5448261"|"549733 9"|"5545857"|"5675524" |"5714932"|"5752205"|" 5857148"|"5857157"|"6 067018"|"6172640"|"62 86060"|"6446127"|"662 4752"|"6625472"|"6774 787"|"6889057"|"69805 46"|"7034684"|"711078 9"|"7266391"|"7453357" |"7647511"|"7690994"|" 7843427"|"7912503"|"8 000647"|"8018726"|"80 78787"|"8253559"|"825 3560"|"8254878"|"8285 248"|"8422954"|"85888 06"|"8750928"|"929502 4").PN.					
L627	79	L229 and (emit$5 or sound or alert$5 or audible or audio)	(US-PGPUB; USPAT)	OR	ON	ON	2022/03/22 09:10 AM
L628	79	L230 and (@ad<="20100226" or @rlad<="20100226" or @pd<="20100226")	(US-PGPUB; USPAT)	OR	ON	ON	2022/03/22 09:10 AM
L629	27	"7453357"	(US-PGPUB; USPAT)	OR	ON	ON	2022/03/22 09:10 AM
L630	2	"20110159917"	(US-PGPUB; USPAT)	OR	ON	ON	2022/03/22 09:10 AM
L631	2	"20100171612"	(US-PGPUB; USPAT)	OR	ON	ON	2022/03/22 09:10 AM
L632	0	"2010/0171612"	(US-PGPUB; USPAT)	OR	ON	ON	2022/03/22 09:10 AM
L633	0	"2011/0159917"	(US-PGPUB; USPAT)	OR	ON	ON	2022/03/22 09:10 AM
L634	6	"10645537"	(US-PGPUB; USPAT)	OR	ON	ON	2022/03/22 09:10 AM
L635	2	"20200228930"	(US-PGPUB; USPAT)	OR	ON	ON	2022/03/22 09:10 AM
L636	100167	(G08B13/1427 OR G08B21/0244 OR G08B21/0247 OR G08B21/0269 OR G08B21/0272 OR G08B21/0277 OR G08B25/016 OR H04L41/0618 OR	(US-PGPUB; USPAT)	OR	ON	ON	2022/03/22 09:10 AM

		H04W4/02 OR H04W4/024 OR H04W4/029 OR H04W4/20 OR H04W4/80 OR H04W64/00).CPC.					
L637	90	("10123161"|"20020103008"|"20030052860"|"20030162574"|"20030193399"|"20040097127"|"20040125080"|"20040167820"|"20040204074"|"20050065851"|"20050186968"|"20050231361"|"20060012488"|"20060152487"|"20060152488"|"20060152489"|"20060154642"|"20060259942"|"20070005840"|"20070013526"|"20070021148"|"20070038785"|"20070052177"|"20070060228"|"20070060384"|"20070066394"|"20070080933"|"20070130592"|"20070136264"|"20070279245"|"20080001814"|"20080012824"|"20080032713"|"20080052750"|"20080062120"|"20080166968"|"20080278445"|"20090074051"|"20090217335"|"20090237209"|"20090240814"|"20090249247"|"20090284664"|"20110210849"|"20110210959"|"20110212699"|"20110212702"|"20110215921"|"20120077439"|"20160227362"|"20180192236"|"4476469"|"5146231"|"5343136"|"5448261"|"5497339"|"5545857"|"5675524"|"5714932"|"5752205"|"5857148"|"5857157"|"6067018"|"6172640"|"6286060"|"6446127"|"6624752"|"6625472"|"6774787"|"6889057"|"6980546"|"7034684"|"7110789"|"7266391"|"7453357"|"7647511"|"7690994"|"7843427"|"7912503"|"8000647"|"8018726"|"8078787"|"8253559"|"8253560"|"8254878"|"8285248"|"8422954"|"85888	(US-PGPUB; USPAT)	OR	ON	ON	2022/03/22 09:10 AM

		06"|"8750928"|"9295024").PN.					
L638	79	L240 and (emit$5 or sound or alert$5 or audible or audio)	(US-PGPUB; USPAT)	OR	ON	ON	2022/03/22 09:10 AM
L639	79	L241 and (@ad<="20100226" or @rlad<="20100226" or @pd<="20100226")	(US-PGPUB; USPAT)	OR	ON	ON	2022/03/22 09:10 AM
L640	69566	L239 and (emit$5 or sound or alert$5 or audible or audio)	(US-PGPUB; USPAT)	OR	ON	ON	2022/03/22 09:10 AM
L641	324	((lost or misplaced) same ((page or paged or paging) near7 (sound or alarm or alert or audible or audio)))	(US-PGPUB; USPAT)	OR	ON	ON	2022/03/22 09:10 AM
L642	257	L244 and (@ad<="20100226" or @rlad<="20100226" or @pd<="20100226")	(US-PGPUB; USPAT)	OR	ON	ON	2022/03/22 09:10 AM
L643	320	L244 and (emit$5 or sound or alert$5 or audible or audio)	(US-PGPUB; USPAT)	OR	ON	ON	2022/03/22 09:10 AM
L644	71	L239 and L246	(US-PGPUB; USPAT)	OR	ON	ON	2022/03/22 09:10 AM
L645	62	L247 and (@ad<="20100226" or @rlad<="20100226" or @pd<="20100226")	(US-PGPUB; USPAT)	OR	ON	ON	2022/03/22 09:10 AM
L646	2	"20200228930"	(US-PGPUB; USPAT)	OR	ON	ON	2022/03/22 09:10 AM
L647	27	(US-20070080933-$ or US-20110081866-$ or US-20080094185-$ or US-20050065851-$ or US-20030088469-$ or US-20080320190-$ or US-20090074051-$ or US-20070141989-$ or US-20090270036-$ or US-20090240814-$ or US-20090058663-$ or US-20090249247-$ or US-20070080934-$ or US-20110215921-$ or US-20060199538-$ or US-20050200478-$ or US-20070279245-$ or US-20070049241-$ or US-20080062120-$ or US-20110159917-$ or US-20100171612-$).did. or (US-8078787-$ or US-8174359-$ or	(US-PGPUB; USPAT)	OR	ON	ON	2022/03/22 09:10 AM

		US-6681109-$ or US-6400270-$ or US-7453357-$ or US-8736445-$).did.					
L648	2	"20210029506"	(US-PGPUB; USPAT)	OR	ON	ON	2022/03/22 09:10 AM
L649	1	L251 and arrow	(US-PGPUB; USPAT)	OR	ON	ON	2022/03/22 09:10 AM
L650	2	L251 and direction$5	(US-PGPUB; USPAT)	OR	ON	ON	2022/03/22 09:10 AM
L651	10	L250 and (direction)	(US-PGPUB; USPAT)	OR	ON	ON	2022/03/22 09:10 AM
L652	2	"20070080933"	(US-PGPUB; USPAT)	OR	ON	ON	2022/03/22 09:10 AM
L653	2	L255 and (arrow or indicator)	(US-PGPUB; USPAT)	OR	ON	ON	2022/03/22 09:10 AM
L654	2	L255 and ("9g")	(US-PGPUB; USPAT)	OR	ON	ON	2022/03/22 09:10 AM
L655	21	L250 and (arrow or indication or indicator or indicat$5)	(US-PGPUB; USPAT)	OR	ON	ON	2022/03/22 09:10 AM
L656	1	"20080062120"	(US-PGPUB; USPAT)	OR	ON	ON	2022/03/22 09:10 AM
L657	1	L259 and "304"	(US-PGPUB; USPAT)	OR	ON	ON	2022/03/22 09:10 AM
L658	6	L250 not L258	(US-PGPUB; USPAT)	OR	ON	ON	2022/03/22 09:10 AM
L659	4	"10834539"	(US-PGPUB; USPAT)	OR	ON	ON	2022/03/22 09:10 AM
L660	1	"10834539".pn.	(US-PGPUB; USPAT)	OR	ON	ON	2022/03/22 09:10 AM
L661	1	L263 and long.clm.	(US-PGPUB; USPAT)	OR	ON	ON	2022/03/22 09:10 AM
L662	1	L263 and distance.clm.	(US-PGPUB; USPAT)	OR	ON	ON	2022/03/22 09:10 AM
L663	91665	(H04W4/02 OR H04W4/024 OR H04W4/029 OR H04W4/80 OR H04W64/00).CPC.	(US-PGPUB; USPAT)	OR	ON	ON	2022/03/22 09:10 AM
L664	3693	L266 and (direction same arrow)	(US-PGPUB; USPAT)	OR	ON	ON	2022/03/22 09:10 AM
L665	970	L266 and ((display$4 or visually) same (direction same arrow) same (location or position))	(US-PGPUB; USPAT)	OR	ON	ON	2022/03/22 09:10 AM
L666	259	L268 and (@ad<="20100226" or @rlad<="20100226" or @pd<="20100226")	(US-PGPUB; USPAT)	OR	ON	ON	2022/03/22 09:10 AM
L667	93	("10123161"|"20020103	(US-PGPUB; USPAT)	OR	ON	ON	2022/03/22

		008"|"20030052860"|"2 0030162574"|"2003019 3399"|"20040097127"|" 20040125080"|"200401 67820"|"20040204074"| "20050065851"|"20050 186968"|"20050231361 "|"20060012488"|"2006 0152487"|"2006015248 8"|"20060152489"|"200 60154642"|"200602599 42"|"20070005840"|"20 070013526"|"20070021 148"|"20070038785"|"2 0070052177"|"2007006 0228"|"20070060384"|" 20070066394"|"200700 80933"|"20070130592"| "20070136264"|"20070 279245"|"20080001814 "|"20080012824"|"2008 0032713"|"2008005275 0"|"20080062120"|"200 80166968"|"200802784 45"|"20090074051"|"20 090217335"|"20090237 209"|"20090240814"|"2 0090249247"|"2009028 4664"|"20110210849"|" 20110210959"|"201102 12699"|"20110212702"| "20110215921"|"20120 077439"|"20160227362 "|"20180192236"|"4476 469"|"5146231"|"53431 36"|"5448261"|"549733 9"|"5545857"|"5675524" |"5714932"|"5752205"|" 5857148"|"5857157"|"6 067018"|"6172640"|"62 86060"|"6400270"|"644 6127"|"6624752"|"6625 472"|"6774787"|"68890 57"|"6980546"|"703468 4"|"7110789"|"7266391" |"7453357"|"7647511"|" 7690994"|"7714737"|"7 843427"|"7912503"|"80 00647"|"8018726"|"807 8787"|"8174359"|"8253 559"|"8253560"|"82548 78"|"8285248"|"842295 4"|"8588806"|"8750928" |"9295024").PN.					09:10 AM
L668	6	L270 and ((display$4 or visually) same (direction same arrow) same (location or position))	(US-PGPUB; USPAT)	OR	ON	ON	2022/03/22 09:10 AM

L669	1	"20070080933".pn.	(US-PGPUB; USPAT)	OR	ON	ON	2022/03/22 09:10 AM
L670	1	"20140194148".pn.	(US-PGPUB; USPAT)	OR	ON	ON	2022/03/22 09:10 AM
L671	26	("2007/0080933").urpn. AND (PGPB | USPT | USOC).dbnm.	(US-PGPUB; USPAT; USOCR)	OR	ON	ON	2022/03/22 09:10 AM
L672	90	("8253559").urpn. AND (PGPB | USPT | USOC).dbnm.	(US-PGPUB; USPAT; USOCR)	OR	ON	ON	2022/03/22 09:10 AM
L673	20	("8253560").urpn. AND (PGPB | USPT | USOC).dbnm.	(US-PGPUB; USPAT; USOCR)	OR	ON	ON	2022/03/22 09:10 AM
L674	30	((US-20070080934-A1 OR US-20140194148-A1 OR US-20080182589-A1 OR US-20100171612-A1 OR US-20110159917-A1 OR US-20080062120-A1 OR US-20070049241-A1 OR US-20070279245-A1 OR US-20050200478-A1 OR US-20060199538-A1 OR US-20110215921-A1 OR US-20070080933-A1 OR US-20090249247-A1 OR US-20090058663-A1 OR US-20090240814-A1 OR US-20090270036-A1 OR US-20070141989-A1 OR US-20090074051-A1 OR US-20080320190-A1 OR US-20030088469-A1 OR US-20050065851-A1 OR US-20080094185-A1 OR US-20110081866-A1).did. AND PGPB.dbnm.) OR ((US-9264856-B1 OR US-8736445-B2 OR US-7453357-B2 OR US-6400270-B1 OR US-6681109-B1 OR US-8174359-B1 OR US-8078787-B2).did. AND USPT.dbnm.)	(USPAT; US-PGPUB; FPRS; USOCR; IBM_TDB; EPO; JPO; DERWENT; FIT (AU, AP, AT, BE, BG, BR, BY, CA, CH, CN, CS, CU, CZ, DD, DE, DK, EA, EE, EP, ES, FI, FR, GB, HR, HU, ID, IE, IL, IS, IT, JP, KR, LT, LU, LV, MA, OA, RU, SU, WO, MC, MD, MY, NL, NO, NZ, PH, PL, PT, RO, RS, SE, SG, SI, SK, TH, TN, TR, TW, UA, VN))	OR	ON	ON	2022/03/22 09:10 AM
L675	4	L277 AND ((display$4 OR visually) SAME (direction SAME arrow)	(US-PGPUB; USPAT)	OR	ON	ON	2022/03/22 09:10 AM

		SAME (location OR position))					
L676	91665	(H04W4/02 OR H04W4/024 OR H04W4/029 OR H04W4/80 OR H04W64/00).CPC.	(US-PGPUB; USPAT)	OR	ON	ON	2022/03/22 09:10 AM
L677	970	L279 AND ((display$4 OR visually) SAME (direction SAME arrow) SAME (location OR position))	(US-PGPUB; USPAT)	OR	ON	ON	2022/03/22 09:10 AM
L678	3477	(generat$5 adj2 pair$4 adj2 signal)	(US-PGPUB; USPAT; USOCR)	OR	ON	ON	2022/03/22 09:10 AM
L679	2	280 AND 281	(US-PGPUB; USPAT; USOCR)	OR	ON	ON	2022/03/22 09:10 AM
L680	2	L280 AND L281	(US-PGPUB; USPAT; USOCR)	OR	ON	ON	2022/03/22 09:10 AM
L681	64	L279 AND L281	(US-PGPUB; USPAT; USOCR)	OR	ON	ON	2022/03/22 09:10 AM
L682	1238	L281 AND ((location OR direction) SAME (arrow OR point$4 OR indicat$5))	(US-PGPUB; USPAT; USOCR)	OR	ON	ON	2022/03/22 09:10 AM
L683	734	L285 AND (@ad<="20100226" OR @rlad<="20100226" OR @pd<="20100226")	(US-PGPUB; USPAT)	OR	ON	ON	2022/03/22 09:10 AM
L684	374	L286 AND display$4	(US-PGPUB; USPAT)	OR	ON	ON	2022/03/22 09:10 AM
L685	247	(serving adj3 cell) SAME paging SAME occasion$1	(US-PGPUB; USPAT; USOCR)	OR	ON	ON	2022/03/22 09:10 AM
L686	2	"11265680"	(US-PGPUB; USPAT; USOCR)	OR	ON	ON	2022/03/22 09:10 AM
L687	1	"11265680".pn.	(US-PGPUB; USPAT; USOCR)	OR	ON	ON	2022/03/22 09:10 AM
L688	1	L290 AND (ultra$10 OR ultr-wideband OR wideband OR (ultra adj2 wideband))	(US-PGPUB; USPAT; USOCR)	OR	ON	ON	2022/03/22 09:10 AM
L689	0	L290 AND ((TOF OR (time adj3 flight)) SAME (ultra$10 OR ultr-wideband OR wideband OR (ultra adj2 wideband)))	(US-PGPUB; USPAT; USOCR)	OR	ON	ON	2022/03/22 09:10 AM
L690	1	L290 AND (TOF OR (time adj3 flight))	(US-PGPUB; USPAT; USOCR)	OR	ON	ON	2022/03/22 09:10 AM
L691	14	"9942700"	(US-PGPUB; USPAT; USOCR)	OR	ON	ON	2022/03/22 09:10 AM
L692	10	"10440501"	(US-PGPUB; USPAT;	OR	ON	ON	2022/03/22

			USOCR)				09:10 AM
L693	2	"11265680"	(US-PGPUB; USPAT; USOCR)	OR	ON	ON	2022/03/22 09:10 AM
L694	1	L296 AND (flight OR round)	(US-PGPUB; USPAT; USOCR)	OR	ON	ON	2022/03/22 09:10 AM
L695	1	L296 AND (ultra)	(US-PGPUB; USPAT; USOCR)	OR	ON	ON	2022/03/22 09:10 AM
L696	1	L296 AND (estimate)	(US-PGPUB; USPAT; USOCR)	OR	ON	ON	2022/03/22 09:10 AM
L697	2	L296 AND (distance)	(US-PGPUB; USPAT; USOCR)	OR	ON	ON	2022/03/22 09:10 AM
L698	1	L296 AND (orientation)	(US-PGPUB; USPAT; USOCR)	OR	ON	ON	2022/03/22 09:10 AM
L699	1	L296 AND (orientation SAME rotation)	(US-PGPUB; USPAT; USOCR)	OR	ON	ON	2022/03/22 09:10 AM
L700	1	L296 AND (names)	(US-PGPUB; USPAT; USOCR)	OR	ON	ON	2022/03/22 09:10 AM
L701	1	L296 AND (bluetooth$3)	(US-PGPUB; USPAT; USOCR)	OR	ON	ON	2022/03/22 09:10 AM
L702	1	L296 AND (nam$3)	(US-PGPUB; USPAT; USOCR)	OR	ON	ON	2022/03/22 09:10 AM
L703	4	"10834539"	(US-PGPUB; USPAT; USOCR)	OR	ON	ON	2022/03/22 09:10 AM
L704	4	L306 AND (time OR flight OR round)	(US-PGPUB; USPAT; USOCR)	OR	ON	ON	2022/03/22 09:10 AM
L705	3	L306 AND (orientation)	(US-PGPUB; USPAT; USOCR)	OR	ON	ON	2022/03/22 09:10 AM
L706	3	L306 AND (orientation OR rotation)	(US-PGPUB; USPAT; USOCR)	OR	ON	ON	2022/03/22 09:10 AM
L707	6	"10645537"	(US-PGPUB; USPAT; USOCR)	OR	ON	ON	2022/03/22 09:10 AM
L708	5	L310 AND (orientation OR rotation)	(US-PGPUB; USPAT; USOCR)	OR	ON	ON	2022/03/22 09:10 AM
L709	10	"10440501"	(US-PGPUB; USPAT; USOCR)	OR	ON	ON	2022/03/22 09:10 AM
L710	1	"10440501".pn.	(US-PGPUB; USPAT; USOCR)	OR	ON	ON	2022/03/22 09:10 AM
L711	1	L313 AND (orientation OR rotation)	(US-PGPUB; USPAT; USOCR)	OR	ON	ON	2022/03/22 09:10 AM
L712	1	L314 AND (time OR flight OR round)	(US-PGPUB; USPAT; USOCR)	OR	ON	ON	2022/03/22 09:10 AM
L713	1	"10123161".pn.	(US-PGPUB; USPAT; USOCR)	OR	ON	ON	2022/03/22 09:10 AM
L714	1	L316 AND (time OR flight OR round)	(US-PGPUB; USPAT; USOCR)	OR	ON	ON	2022/03/22 09:10 AM
L715	1	L317 AND (orientation OR rotation)	(US-PGPUB; USPAT; USOCR)	OR	ON	ON	2022/03/22 09:10 AM
L716	1	L317 AND (rotation)	(US-PGPUB; USPAT; USOCR)	OR	ON	ON	2022/03/22 09:10 AM

L717	1	L316 AND (rotation)	(US-PGPUB; USPAT; USOCR)	OR	ON	ON	2022/03/22 09:10 AM
L718	1	"9942700".pn.	(US-PGPUB; USPAT; USOCR)	OR	ON	ON	2022/03/22 09:10 AM
L719	1	L321 AND rotation$4	(US-PGPUB; USPAT; USOCR)	OR	ON	ON	2022/03/22 09:10 AM
L720	1	L321 AND (time OR flight OR round)	(US-PGPUB; USPAT; USOCR)	OR	ON	ON	2022/03/22 09:10 AM
L721	1	L321 AND (TOF OR (time adj3 flight))	(US-PGPUB; USPAT; USOCR)	OR	ON	ON	2022/03/22 09:10 AM
L722	1	"9295024".pn.	(US-PGPUB; USPAT; USOCR)	OR	ON	ON	2022/03/22 09:10 AM
L723	1	L325 AND (TOF OR (time adj3 flight))	(US-PGPUB; USPAT; USOCR)	OR	ON	ON	2022/03/22 09:10 AM
L724	1	L325 AND rotation$4	(US-PGPUB; USPAT; USOCR)	OR	ON	ON	2022/03/22 09:10 AM
L725	1	L325 AND (ultra$8 OR wideband)	(US-PGPUB; USPAT; USOCR)	OR	ON	ON	2022/03/22 09:10 AM
L726	1	"8768381".pn.	(US-PGPUB; USPAT; USOCR)	OR	ON	ON	2022/03/22 09:10 AM
L727	1	L329 AND (ultra$8 OR wideband)	(US-PGPUB; USPAT; USOCR)	OR	ON	ON	2022/03/22 09:10 AM
L728	1	L329 AND rotation$4	(US-PGPUB; USPAT; USOCR)	OR	ON	ON	2022/03/22 09:10 AM
L729	1	L329 AND (TOF OR (time adj3 flight))	(US-PGPUB; USPAT; USOCR)	OR	ON	ON	2022/03/22 09:10 AM
L730	1	"8588806".pn.	(US-PGPUB; USPAT; USOCR)	OR	ON	ON	2022/03/22 09:10 AM
L731	1	L333 AND (TOF OR (time adj3 flight))	(US-PGPUB; USPAT; USOCR)	OR	ON	ON	2022/03/22 09:10 AM
L732	1	L333 AND rotation$4	(US-PGPUB; USPAT; USOCR)	OR	ON	ON	2022/03/22 09:10 AM
L733	1	L333 AND (ultra$8 OR wideband)	(US-PGPUB; USPAT; USOCR)	OR	ON	ON	2022/03/22 09:10 AM
L734	30	((US-20070080934-A1 OR US-20140194148-A1 OR US-20080182589-A1 OR US-20100171612-A1 OR US-20110159917-A1 OR US-20080062120-A1 OR US-20070049241-A1 OR US-20070279245-A1 OR US-20050200478-A1 OR US-20060199538-A1 OR US-20110215921-A1 OR US-20070080933-A1 OR US-20090249247-A1 OR US-20090058663-	(US-PGPUB; USPAT; USOCR; FIT (AU, AP, AT, BE, BG, BR, BY, CA, CH, CN, CS, CU, CZ, DD, DE, DK, EA, EE, EP, ES, FI, FR, GB, HR, HU, ID, IE, IL, IS, IT, JP, KR, LT, LU, LV, MA, OA, RU, SU, WO, MC, MD, MY, NL, NO, NZ, PH, PL, PT, RO, RS, SE, SG, SI, SK, TH, TN, TR, TW, UA, VN); FPRS; EPO; JPO; DERWENT; IBM_TDB)	OR	ON	ON	2022/03/22 09:10 AM

		A1 OR US-20090240814-A1 OR US-20090270036-A1 OR US-20070141989-A1 OR US-20090074051-A1 OR US-20080320190-A1 OR US-20030088469-A1 OR US-20050065851-A1 OR US-20080094185-A1 OR US-20110081866-A1).did. AND PGPB.dbnm.) OR ((US-9264856-B1 OR US-8736445-B2 OR US-7453357-B2 OR US-6400270-B1 OR US-6681109-B1 OR US-8174359-B1 OR US-8078787-B2).did. AND USPT.dbnm.)					
L735	6	L337 AND (ultra$8 OR wideband OR ultra?wideband OR (ultra adj2 wideband))	(US-PGPUB; USPAT; USOCR)	OR	ON	ON	2022/03/22 09:10 AM
L736	6	L337 AND (UWB OR ultra$8 OR wideband OR ultra?wideband OR (ultra adj2 wideband))	(US-PGPUB; USPAT; USOCR)	OR	ON	ON	2022/03/22 09:10 AM
L737	6	L337 AND (UWB OR ultra$8 OR wideband OR ultra?wideband OR (ultra adj2 wideband) OR (ultra adj2 wide adj2 band))	(US-PGPUB; USPAT; USOCR)	OR	ON	ON	2022/03/22 09:10 AM
L738	1	L333 AND (map)	(US-PGPUB; USPAT; USOCR)	OR	ON	ON	2022/03/22 09:10 AM
L739	0	L337 AND (TOF OR time?of?flight OR (time adj3 flight) OR (round adj3 trip))	(US-PGPUB; USPAT; USOCR)	OR	ON	ON	2022/03/22 09:10 AM
L740	6	L337 AND (TOF OR time?of?flight OR (time adj3 flight) OR (round adj3 trip) OR delay)	(US-PGPUB; USPAT; USOCR)	OR	ON	ON	2022/03/22 09:10 AM
L741	23724	(TOF OR time?of?flight OR (time adj3 flight) OR (round adj3 trip)) SAME (UWB OR ultra$8 OR wideband OR ultra?wideband OR (ultra adj2 wideband) OR (ultra adj2 wide adj2 band))	(US-PGPUB; USPAT; USOCR)	OR	ON	ON	2022/03/22 09:10 AM

L742	7337	L344 AND (@ad<="20100226" OR @rlad<="20100226" OR @pd<="20100226")	(US-PGPUB; USPAT)	OR	ON	ON	2022/03/22 09:10 AM
L743	9656	(distance OR position) SAME (TOF OR time?of?flight OR (time adj3 flight) OR (round adj3 trip)) SAME (UWB OR ultra$8 OR wideband OR ultra?wideband OR (ultra adj2 wideband) OR (ultra adj2 wide adj2 band))	(US-PGPUB; USPAT; USOCR)	OR	ON	ON	2022/03/22 09:10 AM
L744	1114	estimat$5 SAME (distance OR position) SAME (TOF OR time?of?flight OR (time adj3 flight) OR (round adj3 trip)) SAME (UWB OR ultra$8 OR wideband OR ultra?wideband OR (ultra adj2 wideband) OR (ultra adj2 wide adj2 band))	(US-PGPUB; USPAT; USOCR)	OR	ON	ON	2022/03/22 09:10 AM
L745	297	L347 AND (@ad<="20100226" OR @rlad<="20100226" OR @pd<="20100226")	(US-PGPUB; USPAT)	OR	ON	ON	2022/03/22 09:10 AM
L746	314	(arrow adj3 pointing adj3 direction).clm.	(US-PGPUB; USPAT; USOCR)	OR	ON	ON	2022/03/22 09:10 AM
L747	153	L349 AND (@ad<="20100226" OR @rlad<="20100226" OR @pd<="20100226")	(US-PGPUB; USPAT)	OR	ON	ON	2022/03/22 09:10 AM
L748	1	"20160227362".pn.	(US-PGPUB; USPAT; USOCR)	OR	ON	ON	2022/03/22 09:10 AM
L749	1	L351 AND (time OR flight OR (round adj3 trip) OR (time adj2 delay))	(US-PGPUB; USPAT; USOCR)	OR	ON	ON	2022/03/22 09:10 AM
L750	193	(distance OR position OR location) SAME (round adj3 trip adj2 signal adj2 delay)	(US-PGPUB; USPAT; USOCR)	OR	ON	ON	2022/03/22 09:10 AM
L751	1	L351 AND (wideband OR uwb OR (wide adj2 band))	(US-PGPUB; USPAT; USOCR)	OR	ON	ON	2022/03/22 09:10 AM
L752	367877	".353" AND (@ad<="20100226" OR @rlad<="20100226" OR @pd<="20100226")	(US-PGPUB; USPAT)	OR	ON	ON	2022/03/22 09:10 AM

L753	130	L353 AND (@ad<="20100226" OR @rlad<="20100226" OR @pd<="20100226")	(US-PGPUB; USPAT)	OR	ON	ON	2022/03/22 09:10 AM
L754	36	((US-20070080934-A1 OR US-20140194148-A1 OR US-20080182589-A1 OR US-20100171612-A1 OR US-20110159917-A1 OR US-20080062120-A1 OR US-20070049241-A1 OR US-20070279245-A1 OR US-20050200478-A1 OR US-20060199538-A1 OR US-20110215921-A1 OR US-20070080933-A1 OR US-20090249247-A1 OR US-20090058663-A1 OR US-20090240814-A1 OR US-20090270036-A1 OR US-20070141989-A1 OR US-20090074051-A1 OR US-20080320190-A1 OR US-20030088469-A1 OR US-20050065851-A1 OR US-20080094185-A1 OR US-20110081866-A1 OR US-20040170136-A1).did. AND PGPB.dbnm.) OR ((US-9264856-B1 OR US-8736445-B2 OR US-7453357-B2 OR US-6400270-B1 OR US-6681109-B1 OR US-8174359-B1 OR US-8078787-B2 OR US-5416478-A OR US-7487043-B2 OR US-7260399-B1 OR US-8200240-B1 OR US-5379447-A).did. AND USPT.dbnm.)	(US-PGPUB; USPAT; USOCR; FIT (AU, AP, AT, BE, BG, BR, BY, CA, CH, CN, CS, CU, CZ, DD, DE, DK, EA, EE, EP, ES, FI, FR, GB, HR, HU, ID, IE, IL, IS, IT, JP, KR, LT, LU, LV, MA, OA, RU, SU, WO, MC, MD, MY, NL, NO, NZ, PH, PL, PT, RO, RS, SE, SG, SI, SK, TH, TN, TR, TW, UA, VN); FPRS; EPO; JPO; DERWENT; IBM_TDB)	OR	ON	ON	2022/03/22 09:10 AM
L755	697918	(display$5 SAME pair$4 SAME device$1)	(US-PGPUB; USPAT; USOCR; FIT (AU, AP, AT, BE, BG, BR, BY, CA, CH, CN, CS, CU, CZ, DD, DE, DK, EA, EE, EP, ES, FI, FR, GB, HR, HU, ID, IE, IL, IS,	OR	ON	ON	2022/03/22 09:10 AM

			IT, JP, KR, LT, LU, LV, MA, OA, RU, SU, WO, MC, MD, MY, NL, NO, NZ, PH, PL, PT, RO, RS, SE, SG, SI, SK, TH, TN, TR, TW, UA, VN); FPRS; EPO; JPO; DERWENT; IBM_TDB)				
L756	28332	(display$5 SAME name SAME pair$4 SAME device$1)	(US-PGPUB; USPAT; USOCR; FIT (AU, AP, AT, BE, BG, BR, BY, CA, CH, CN, CS, CU, CZ, DD, DE, DK, EA, EE, EP, ES, FI, FR, GB, HR, HU, ID, IE, IL, IS, IT, JP, KR, LT, LU, LV, MA, OA, RU, SU, WO, MC, MD, MY, NL, NO, NZ, PH, PL, PT, RO, RS, SE, SG, SI, SK, TH, TN, TR, TW, UA, VN); FPRS; EPO; JPO; DERWENT; IBM_TDB)	OR	ON	ON	2022/03/22 09:10 AM
L757	1210	L359 AND (@ad<="20100226" OR @rlad<="20100226" OR @pd<="20100226")	(US-PGPUB; USPAT)	OR	ON	ON	2022/03/22 09:10 AM
L758	6171	(display$5 SAME name SAME (pair$4 near5 device$1))	(US-PGPUB; USPAT; USOCR; FIT (AP, AT, AU, BE, BG, BR, BY, CA, CH, CN, CS, CU, CZ, DD, DE, DK, EA, EE, EP, ES, FI, FR, GB, HR, HU, ID, IE, IL, IS, IT, JP, KR, LT, LU, LV, MA, MC, MD, MY, NL, NO, NZ, OA, PH, PL, PT, RO, RS, RU, SE, SG, SI, SK, SU, TH, TN, TR, TW, UA, VN, WO); FPRS; EPO; JPO; DERWENT; IBM_TDB)	OR	ON	ON	2022/03/22 09:10 AM
L759	316	L361 AND (@ad<="20100226" OR @rlad<="20100226" OR @pd<="20100226")	(US-PGPUB; USPAT)	OR	ON	ON	2022/03/22 09:10 AM
L760	1	L351 AND orientation	(US-PGPUB; USPAT)	OR	ON	ON	2022/03/22 09:10 AM
L761	1	L351 AND manual$5	(US-PGPUB; USPAT)	OR	ON	ON	2022/03/22 09:10 AM
L762	39	((US-20070080934-A1 OR US-20140194148-A1 OR US-	(US-PGPUB; USPAT; USOCR; FIT (AP, AT, AU, BE, BG, BR, BY,	OR	ON	ON	2022/03/22 09:10 AM

		20080182589-A1 OR US-20100171612-A1 OR US-20110159917-A1 OR US-20080062120-A1 OR US-20070049241-A1 OR US-20070279245-A1 OR US-20050200478-A1 OR US-20060199538-A1 OR US-20110215921-A1 OR US-20070080933-A1 OR US-20090249247-A1 OR US-20090058663-A1 OR US-20090240814-A1 OR US-20090270036-A1 OR US-20070141989-A1 OR US-20090074051-A1 OR US-20080320190-A1 OR US-20030088469-A1 OR US-20050065851-A1 OR US-20080094185-A1 OR US-20110081866-A1 OR US-20040170136-A1 OR US-20090156123-A1 OR US-20090034591-A1 OR US-20090270093-A1).did. AND PGPB.dbnm.) OR ((US-9264856-B1 OR US-8736445-B2 OR US-7453357-B2 OR US-6400270-B1 OR US-6681109-B1 OR US-8174359-B1 OR US-8078787-B2 OR US-5416478-A OR US-7487043-B2 OR US-7260399-B1 OR US-8200240-B1 OR US-5379447-A).did. AND USPT.dbnm.)	CA, CH, CN, CS, CU, CZ, DD, DE, DK, EA, EE, EP, ES, FI, FR, GB, HR, HU, ID, IE, IL, IS, IT, JP, KR, LT, LU, LV, MA, MC, MD, MY, NL, NO, NZ, OA, PH, PL, PT, RO, RS, RU, SE, SG, SI, SK, SU, TH, TN, TR, TW, UA, VN, WO); FPRS; EPO; JPO; DERWENT; IBM_TDB)				
L763	39	((US-20070080934-A1 OR US-20140194148-A1 OR US-20080182589-A1 OR US-20100171612-A1 OR US-20110159917-A1 OR US-20080062120-A1 OR US-20070049241-A1 OR US-20070279245-A1 OR US-	(US-PGPUB; USPAT; USOCR; FIT (AP, AT, AU, BE, BG, BR, BY, CA, CH, CN, CS, CU, CZ, DD, DE, DK, EA, EE, EP, ES, FI, FR, GB, HR, HU, ID, IE, IL, IS, IT, JP, KR, LT, LU, LV, MA, MC, MD, MY, NL, NO, NZ, OA, PH, PL, PT, RO, RS, RU, SE,	OR	ON	ON	2022/03/22 09:10 AM

		20050200478-A1 OR US-20060199538-A1 OR US-20110215921-A1 OR US-20070080933-A1 OR US-20090249247-A1 OR US-20090058663-A1 OR US-20090240814-A1 OR US-20090270036-A1 OR US-20070141989-A1 OR US-20090074051-A1 OR US-20080320190-A1 OR US-20030088469-A1 OR US-20050065851-A1 OR US-20080094185-A1 OR US-20110081866-A1 OR US-20040170136-A1 OR US-20090156123-A1 OR US-20090034591-A1 OR US-20090270093-A1).did. AND PGPB.dbnm.) OR ((US-9264856-B1 OR US-8736445-B2 OR US-7453357-B2 OR US-6400270-B1 OR US-6681109-B1 OR US-8174359-B1 OR US-8078787-B2 OR US-5416478-A OR US-7487043-B2 OR US-7260399-B1 OR US-8200240-B1 OR US-5379447-A).did. AND USPT.dbnm.)	SG, SI, SK, SU, TH, TN, TR, TW, UA, VN, WO); FPRS; EPO; JPO; DERWENT; IBM_TDB)				
L764	7	L366 AND (orientation)	(US-PGPUB; USPAT; USOCR; FIT (AP, AT, AU, BE, BG, BR, BY, CA, CH, CN, CS, CU, CZ, DD, DE, DK, EA, EE, EP, ES, FI, FR, GB, HR, HU, ID, IE, IL, IS, IT, JP, KR, LT, LU, LV, MA, MC, MD, MY, NL, NO, NZ, OA, PH, PL, PT, RO, RS, RU, SE, SG, SI, SK, SU, TH, TN, TR, TW, UA, VN, WO); FPRS; EPO; JPO; DERWENT; IBM_TDB)	OR	ON	ON	2022/03/22 09:10 AM
L765	0	L366 AND (chang$5 near7 orientation)	(US-PGPUB; USPAT; USOCR; FIT (AP, AT,	OR	ON	ON	2022/03/22 09:10 AM

			AU, BE, BG, BR, BY, CA, CH, CN, CS, CU, CZ, DD, DE, DK, EA, EE, EP, ES, FI, FR, GB, HR, HU, ID, IE, IL, IS, IT, JP, KR, LT, LU, LV, MA, MC, MD, MY, NL, NO, NZ, OA, PH, PL, PT, RO, RS, RU, SE, SG, SI, SK, SU, TH, TN, TR, TW, UA, VN, WO); FPRS; EPO; JPO; DERWENT; IBM_TDB)				
L766	11723	pair$5 SAME (locatrion OR position) SAME (chang$5 near7 orientation)	(US-PGPUB; USPAT; USOCR; FIT (AP, AT, AU, BE, BG, BR, BY, CA, CH, CN, CS, CU, CZ, DD, DE, DK, EA, EE, EP, ES, FI, FR, GB, HR, HU, ID, IE, IL, IS, IT, JP, KR, LT, LU, LV, MA, MC, MD, MY, NL, NO, NZ, OA, PH, PL, PT, RO, RS, RU, SE, SG, SI, SK, SU, TH, TN, TR, TW, UA, VN, WO); FPRS; EPO; JPO; DERWENT; IBM_TDB)	OR	ON	ON	2022/03/22 09:10 AM
L767	313	pair$5 SAME (locatrion OR position) SAME (user near7 chang$5 near7 orientation)	(US-PGPUB; USPAT; USOCR; FIT (AP, AT, AU, BE, BG, BR, BY, CA, CH, CN, CS, CU, CZ, DD, DE, DK, EA, EE, EP, ES, FI, FR, GB, HR, HU, ID, IE, IL, IS, IT, JP, KR, LT, LU, LV, MA, MC, MD, MY, NL, NO, NZ, OA, PH, PL, PT, RO, RS, RU, SE, SG, SI, SK, SU, TH, TN, TR, TW, UA, VN, WO); FPRS; EPO; JPO; DERWENT; IBM_TDB)	OR	ON	ON	2022/03/22 09:10 AM
L768	12723504	L370AND (@ad<="20100226" OR @rlad<="20100226" OR @pd<="20100226")	(US-PGPUB; USPAT)	OR	ON	ON	2022/03/22 09:10 AM
L769	29	L370 AND (@ad<="20100226" OR @rlad<="20100226" OR @pd<="20100226")	(US-PGPUB; USPAT)	OR	ON	ON	2022/03/22 09:10 AM
L770	0	L366 AND (turn$4 adj4 around)	(US-PGPUB; USPAT)	OR	ON	ON	2022/03/22 09:10 AM

L771	1278	(turn$4 adj4 around) SAME (determin$5 nEAR7 (position OR location))	(US-PGPUB; USPAT)	OR	ON	ON	2022/03/22 09:10 AM
L772	594	L374 AND (@ad<="20100226" OR @rlad<="20100226" OR @pd<="20100226")	(US-PGPUB; USPAT)	OR	ON	ON	2022/03/22 09:10 AM
L773	40	((US-8078787-B2 OR US-9264856-B1 OR US-8736445-B2 OR US-7453357-B2 OR US-6400270-B1 OR US-8174359-B1 OR US-6681109-B1 OR US-5416478-A OR US-7487043-B2 OR US-7260399-B1 OR US-8200240-B1 OR US-5379447-A).did. AND USPT.dbnm.) OR ((US-20140194148-A1 OR US-20080182589-A1 OR US-20100171612-A1 OR US-20110159917-A1 OR US-20080062120-A1 OR US-20070049241-A1 OR US-20070279245-A1 OR US-20050200478-A1 OR US-20060199538-A1 OR US-20110215921-A1 OR US-20090249247-A1 OR US-20070080933-A1 OR US-20110081866-A1 OR US-20080094185-A1 OR US-20050065851-A1 OR US-20030088469-A1 OR US-20090074051-A1 OR US-20070141989-A1 OR US-20090270036-A1 OR US-20090240814-A1 OR US-20090058663-A1 OR US-20070080934-A1 OR US-20080320190-A1 OR US-20040170136-A1 OR US-20090156123-A1 OR US-20090034591-A1 OR US-20090270093-A1 OR US-	(US-PGPUB; USPAT; USOCR; FIT (AU, AP, AT, BE, BG, BR, BY, CA, CH, CN, CS, CU, CZ, DD, DE, DK, EA, EE, EP, ES, FI, FR, GB, HR, HU, ID, IE, IL, IS, IT, JP, KR, LT, LU, LV, MA, OA, RU, SU, WO, MC, MD, MY, NL, NO, NZ, PH, PL, PT, RO, RS, SE, SG, SI, SK, TH, TN, TR, TW, UA, VN); FPRS; EPO; JPO; DERWENT; IBM_TDB)	OR	ON	ON	2022/03/22 09:10 AM

		20050062604-A1).did. AND PGPB.dbnm.)					
L774	85	"7260399"	(US-PGPUB; USPAT; USOCR; FIT (AU, AP, AT, BE, BG, BR, BY, CA, CH, CN, CS, CU, CZ, DD, DE, DK, EA, EE, EP, ES, FI, FR, GB, HR, HU, ID, IE, IL, IS, IT, JP, KR, LT, LU, LV, MA, OA, RU, SU, WO, MC, MD, MY, NL, NO, NZ, PH, PL, PT, RO, RS, SE, SG, SI, SK, TH, TN, TR, TW, UA, VN); FPRS; EPO; JPO; DERWENT; IBM_TDB)	OR	ON	ON	2022/03/22 09:10 AM
L775	2	"7260399".pn.	(US-PGPUB; USPAT; USOCR; FIT (AU, AP, AT, BE, BG, BR, BY, CA, CH, CN, CS, CU, CZ, DD, DE, DK, EA, EE, EP, ES, FI, FR, GB, HR, HU, ID, IE, IL, IS, IT, JP, KR, LT, LU, LV, MA, OA, RU, SU, WO, MC, MD, MY, NL, NO, NZ, PH, PL, PT, RO, RS, SE, SG, SI, SK, TH, TN, TR, TW, UA, VN); FPRS; EPO; JPO; DERWENT; IBM_TDB)	OR	ON	ON	2022/03/22 09:10 AM
L776	1	L377 AND compass	(US-PGPUB; USPAT; USOCR; FIT (AU, AP, AT, BE, BG, BR, BY, CA, CH, CN, CS, CU, CZ, DD, DE, DK, EA, EE, EP, ES, FI, FR, GB, HR, HU, ID, IE, IL, IS, IT, JP, KR, LT, LU, LV, MA, OA, RU, SU, WO, MC, MD, MY, NL, NO, NZ, PH, PL, PT, RO, RS, SE, SG, SI, SK, TH, TN, TR, TW, UA, VN); FPRS; EPO; JPO; DERWENT; IBM_TDB)	OR	ON	ON	2022/03/22 09:10 AM
L777	59	L377 AND (@ad<="20100226" OR @rlad<="20100226" OR @pd<="20100226")	(US-PGPUB; USPAT)	OR	ON	ON	2022/03/22 09:10 AM
L778	1	"5379447".pn.	(US-PGPUB; USPAT)	OR	ON	ON	2022/03/22 09:10 AM

L779	1	"20040170136".pn.	(US-PGPUB; USPAT)	OR	ON	ON	2022/03/22 09:10 AM
L780	4	("7260399" OR "8200240" OR "5379447" OR "20040170136").pn.	(US-PGPUB; USPAT)	OR	ON	ON	2022/03/22 09:10 AM
L781	3	L383 AND (UWB OR wideband OR (wide adj2 band) OR wide?band OR 802.11$3 OR bluetooth$3 OR BLU OR zigbee OR Wimax)	(US-PGPUB; USPAT)	OR	ON	ON	2022/03/22 09:10 AM
L782	4	("20090240814" OR "20090156123" OR "20090034591" OR "20090270093").pn.	(US-PGPUB; USPAT)	OR	ON	ON	2022/03/22 09:10 AM
L783	2	L385 AND (gyro$6 OR compass OR orientation)	(US-PGPUB; USPAT)	OR	ON	ON	2022/03/22 09:10 AM
L784	104	("10123161" OR "20020103008" OR "20030052860" OR "20030162574" OR "20030193399" OR "20040009748" OR "20040097127" OR "20040125080" OR "20040167820" OR "20040204074" OR "20050065851" OR "20050186968" OR "20050231361" OR "20060012488" OR "20060152487" OR "20060152488" OR "20060152489" OR "20060154642" OR "20060259942" OR "20070005840" OR "20070013526" OR "20070021148" OR "20070038785" OR "20070052177" OR "20070060228" OR "20070060384" OR "20070066394" OR "20070077883" OR "20070080933" OR "20070130592" OR "20070136264" OR "20070194925" OR "20070279245" OR "20080001814" OR "20080012824" OR "20080032713" OR	(US-PGPUB; USPAT)	OR	ON	ON	2022/03/22 09:10 AM

		"20080052750" OR "20080062120" OR "20080166968" OR "20080218358" OR "20080278445" OR "20090074051" OR "20090207014" OR "20090217335" OR "20090237209" OR "20090240814" OR "20090249247" OR "20090284664" OR "20110210849" OR "20110210959" OR "20110212699" OR "20110212702" OR "20110215921" OR "20120077439" OR "20140194148" OR "20160227362" OR "20180192236" OR "4476469" OR "5146231" OR "5343136" OR "5448261" OR "5497339" OR "5545857" OR "5675524" OR "5714932" OR "5752205" OR "5857148" OR "5857157" OR "5939981" OR "6067018" OR "6172640" OR "6286060" OR "6400270" OR "6446127" OR "6624752" OR "6625472" OR "6774787" OR "6889057" OR "6980546" OR "6995654" OR "7034684" OR "7110789" OR "7266391" OR "7330122" OR "7340260" OR "7375632" OR "7453357" OR "7647511" OR "7690994" OR "7714737" OR "7843427" OR "7912503" OR "8000647" OR "8018726" OR					

		"8078787" OR "8174359" OR "8253559" OR "8253560" OR "8254878" OR "8285248" OR "8422954" OR "8588806" OR "8750928" OR "9295024").pn.					
L785	49	L387 AND (gyro$6 OR compass OR orientation)	(US-PGPUB; USPAT)	OR	ON	ON	2022/03/22 09:10 AM
L786	49	L387 AND (name$1)	(US-PGPUB; USPAT)	OR	ON	ON	2022/03/22 09:10 AM
L787	22	L387 AND ((display$4 OR icon) SAME name$1)	(US-PGPUB; USPAT)	OR	ON	ON	2022/03/22 09:10 AM
L788	62	L387 AND (UWB OR wideband OR (wide adj2 band) OR wide?band OR 802.11$3 OR bluetooth$3 OR BLU OR zigbee OR Wimax)	(US-PGPUB; USPAT)	OR	ON	ON	2022/03/22 09:10 AM
L789	26	L387 AND (UWB OR wideband OR (wide adj2 band) OR wide?band)	(US-PGPUB; USPAT)	OR	ON	ON	2022/03/22 09:10 AM
L790	0	L387 AND ((UWB OR wideband OR (wide adj2 band) OR wide?band) SAME (TOF OR (time adj2 flight) OR (round adj2 trip) OR round?trip?delay))	(US-PGPUB; USPAT)	OR	ON	ON	2022/03/22 09:10 AM
L791	2286	((UWB OR wideband OR (wide adj2 band) OR wide?band) SAME (TOF OR (time adj2 flight) OR (round adj2 trip) OR round?trip?delay))	(US-PGPUB; USPAT)	OR	ON	ON	2022/03/22 09:10 AM
L792	605	L394 AND (@ad<="20100226" OR @rlad<="20100226" OR @pd<="20100226")	(US-PGPUB; USPAT)	OR	ON	ON	2022/03/22 09:10 AM
L793	1634	((distance OR position OR location OR geographic) SAME (UWB OR wideband OR (wide adj2 band) OR wide?band) SAME (TOF OR (time adj2	(US-PGPUB; USPAT)	OR	ON	ON	2022/03/22 09:10 AM

		flight) OR (round adj2 trip) OR round?trip?delay))					
L794	339	L396 AND (@ad<="20100226" OR @rlad<="20100226" OR @pd<="20100226")	(US-PGPUB; USPAT)	OR	ON	ON	2022/03/22 09:10 AM
L795	1	"11265680".pn.	(US-PGPUB; USPAT; USOCR)	OR	ON	ON	2022/03/22 09:26 AM
L796	100001	(G08B13/1427 OR G08B21/0244 OR G08B21/0247 OR G08B21/0269 OR G08B21/0272 OR G08B21/0277 OR G08B25/016 OR H04W4/02 OR H04W4/024 OR H04W4/029 OR H04W4/20 OR H04W4/80 OR H04W64/00).cpc.	(US-PGPUB; USPAT; USOCR)	OR	ON	ON	2022/03/22 09:27 AM
L797	519	L791 AND L796	(US-PGPUB; USPAT; USOCR)	OR	ON	ON	2022/03/22 09:27 AM

PE2E SEARCH - Search History (Interference)

There are no Interference searches to show.

Doc code: IDS
Doc description: Information Disclosure Statement (IDS) Filed

PTO/SB/08a (02-18)
Approved for use through 11/30/2020. OMB 0651-0031
U.S. Patent and Trademark Office; U.S. DEPARTMENT OF COMMERCE
Under the Paperwork Reduction Act of 1995, no persons are required to respond to a collection of information unless it contains a valid OMB control number.

INFORMATION DISCLOSURE STATEMENT BY APPLICANT (Not for submission under 37 CFR 1.99)		
	Application Number	
	Filing Date	2022-01-19
	First Named Inventor	John W. Howard
	Art Unit	
	Examiner Name	
	Attorney Docket Number	BIKN005C9

U.S.PATENTS Remove

Examiner Initial*	Cite No	Patent Number	Kind Code[1]	Issue Date	Name of Patentee or Applicant of cited Document	Pages,Columns,Lines where Relevant Passages or Relevant Figures Appear
	1	4476469		1984-10-09	Lander	
	2	5146231		1992-09-08	Ghaem et al.	
	3	5343136		1994-08-30	Yamaguchi	
	4	5448261		1995-09-05	Koike	
	5	5497339		1996-03-05	Bernard	
	6	5545857		1996-08-13	Lee	
	7	5675524		1997-10-07	Bernard	
	8	5714932		1998-02-03	Castellon et al.	

ALL REFERENCES CONSIDERED EXCEPT WHERE LINED THROUGH. /B.W.T/

INFORMATION DISCLOSURE STATEMENT BY APPLICANT (Not for submission under 37 CFR 1.99)		
	Application Number	
	Filing Date	2022-01-19
	First Named Inventor	John W. Howard
	Art Unit	
	Examiner Name	
	Attorney Docket Number	BIKN005C9

	9	5752205		1998-05-12	Dzung et al.	
	10	5857148		1999-01-05	Weisshappel et al.	
	11	5857157		1999-01-05	Shindo	
	12	5939981	A	1999-08-17	RENNEY MARJORIE	
	13	6067018		2000-05-23	Skelton et al.	
	14	6172640		2001-01-09	Durst et al.	
	15	6286060		2001-09-04	DiGiorgio et al.	
	16	6400270	A1	2002-06-04	Person	
	17	6446127		2002-09-03	Schuster et al.	
	18	6624752		2003-09-23	Klitsgaard et al.	
	19	6625472		2003-09-23	Farazmandnia et al.	

ALL REFERENCES CONSIDERED EXCEPT WHERE LINED THROUGH. /B.W.T/

INFORMATION DISCLOSURE STATEMENT BY APPLICANT (Not for submission under 37 CFR 1.99)	Application Number	
	Filing Date	2022-01-19
	First Named Inventor	John W. Howard
	Art Unit	
	Examiner Name	
	Attorney Docket Number	BIKN005C9

	20	6774787		2004-08-10	Melbourne	
	21	6889057		2005-05-03	Tordera et al.	
	22	6980546		2005-12-27	Purpura et al.	
	23	6995654	B2	2006-02-07	NYSEN PAUL	
	24	7034684		2006-04-25	Boman et al.	
	25	7110789		2006-09-19	Curtiss et al.	
	26	7266391		2007-09-04	Warren	
	27	7330122	B2	2008-02-12	DERRICK BRUCE G	
	28	7340260	B2	2008-03-04	MCALEXANDER JOSEPH C	
	29	7375632	B1	2008-05-20	SEBANC JOHN	
	30	7453357		2008-11-18	Bernal-Silva et al.	

ALL REFERENCES CONSIDERED EXCEPT WHERE LINED THROUGH. /B.W.T/

INFORMATION DISCLOSURE STATEMENT BY APPLICANT (Not for submission under 37 CFR 1.99)	Application Number	
	Filing Date	2022-01-19
	First Named Inventor	John W. Howard
	Art Unit	
	Examiner Name	
	Attorney Docket Number	BIKN005C9

	31	7647511	B2	2010-01-12	Misawa	
	32	7690994		2010-04-06	Dohta	
	33	7714737	B1	2010-05-11	MORNINGSTAR JAMES	
	34	7843427	B2	2010-11-30	Ording	
	35	7912503		2011-03-22	Chang et al.	
	36	8000647		2011-08-16	Hill	
	37	8018726	B2	2011-09-13	Friedlander	
	38	8078787		2011-12-13	Lydon et al.	
	39	8174359	B1	2012-05-08	VENI III SALVATORE	
	40	8253559	B2	2012-08-28	Howard	
	41	8253560	B2	2012-08-28	Howard	

ALL REFERENCES CONSIDERED EXCEPT WHERE LINED THROUGH. /B.W.T/

INFORMATION DISCLOSURE STATEMENT BY APPLICANT (Not for submission under 37 CFR 1.99)		
	Application Number	
	Filing Date	2022-01-19
	First Named Inventor	John W. Howard
	Art Unit	
	Examiner Name	
	Attorney Docket Number	BIKN005C9

	42	8254878	B2	2012-08-28	Howard	
	43	8285248	B2	2012-10-09	Howard	
	44	8422954	B2	2013-04-16	Howard	
	45	8588806		2013-11-19	Howard et al.	
	46	8750928		2014-06-10	Moran et al.	
	47	9295024	B2	2016-03-22	Howard	
	48	10123161	B2	2018-11-06	Howard	

If you wish to add additional U.S. Patent citation information please click the Add button. Add

U.S.PATENT APPLICATION PUBLICATIONS Remove

Examiner Initial*	Cite No	Publication Number	Kind Code[1]	Publication Date	Name of Patentee or Applicant of cited Document	Pages,Columns,Lines where Relevant Passages or Relevant Figures Appear
	1	20020103008	A1	2002-08-01	Rahn Michael D. et al.	
	2	20030052860	A1	2003-03-20	Park Hee-Seon et al.	

EFS Web 2.1.18

ALL REFERENCES CONSIDERED EXCEPT WHERE LINED THROUGH. /B.W.T/

INFORMATION DISCLOSURE STATEMENT BY APPLICANT (Not for submission under 37 CFR 1.99)	Application Number	
	Filing Date	2022-01-19
	First Named Inventor	John W. Howard
	Art Unit	
	Examiner Name	
	Attorney Docket Number	BIKN005C9

	3	20030162574	A1	2003-08-28	Fan	
	4	20030193399	A1	2003-10-16	Hum Peng Jong et al.	
	5	20040009748	A1	2004-01-15	HEINONEN TOMI	
	6	20040097127	A1	2004-05-20	Smith Simon et al.	
	7	20040125080	A1	2004-07-01	Ha	
	8	20040167820	A1	2004-08-26	Melick Diana et al.	
	9	20040204074	A1	2004-10-14	Desai Nimesh R.	
	10	20050065851	A1	2005-03-24	Aronoff	
	11	20050186968	A1	2005-08-25	Durst Jennifer et al.	
	12	20050231361	A1	2005-10-20	Godbey Darren Lee	
	13	20060012488	A1	2006-01-19	Hilbrink Marcel et al.	

ALL REFERENCES CONSIDERED EXCEPT WHERE LINED THROUGH. /B.W.T/

INFORMATION DISCLOSURE STATEMENT BY APPLICANT (Not for submission under 37 CFR 1.99)	Application Number	
	Filing Date	2022-01-19
	First Named Inventor	John W. Howard
	Art Unit	
	Examiner Name	
	Attorney Docket Number	BIKN005C9

	14	20060152487	A1	2006-07-13	Grunnet-Jepsen Anders et al.	
	15	20060152488	A1	2006-07-13	Salsman Kenneth et al.	
	16	20060152489	A1	2006-07-13	Sweetser John et al.	
	17	20060154642	A1	2006-07-13	Scannell Robert F. JR.	
	18	20060259942	A1	2006-11-16	Toyama Kentaro et al.	
	19	20070005840	A1	2007-01-04	Cheng Yi-Tsung et al.	
	20	20070013526	A1	2007-01-18	Kazdin Ronald S. et al.	
	21	20070021148	A1	2007-01-25	Mahini Hassan	
	22	20070038785	A1	2007-02-15	Varanda Marcelo et al.	
	23	20070052177	A1	2007-03-08	Ikeda Akio et al.	
	24	20070060228	A1	2007-03-15	Akasaka Hideya et al.	

ALL REFERENCES CONSIDERED EXCEPT WHERE LINED THROUGH. /B.W.T/

INFORMATION DISCLOSURE STATEMENT BY APPLICANT (Not for submission under 37 CFR 1.99)	Application Number	
	Filing Date	2022-01-19
	First Named Inventor	John W. Howard
	Art Unit	
	Examiner Name	
	Attorney Docket Number	BIKN005C9

	25	20070060384	A1	2007-03-15	Dohta	
	26	20070066394	A1	2007-03-22	Ikeda Akio et al.	
	27	20070077883	A1	2007-04-05	CHILDERS GARRETT D	
	28	20070080933	A1	2007-04-12	Chen et al.	
	29	20070130592	A1	2007-06-07	Haeusel Fred C.	
	30	20070136264	A1	2007-06-14	Tran Bao Q.	
	31	20070194925	A1	2007-08-23	KARR LAWRENCE J	
	32	20070279245	A1	2007-12-06	Sholem Steven	
	33	20080001814	A1	2008-01-03	Durst Jennifer et al.	
	34	20080012824	A1	2008-01-17	Grunnet-Jepsen Anders et al.	
	35	20080032713	A1	2008-02-07	Yang Shengqiang	

ALL REFERENCES CONSIDERED EXCEPT WHERE LINED THROUGH. /B.W.T/

INFORMATION DISCLOSURE STATEMENT BY APPLICANT (Not for submission under 37 CFR 1.99)		
	Application Number	
	Filing Date	2022-01-19
	First Named Inventor	John W. Howard
	Art Unit	
	Examiner Name	
	Attorney Docket Number	BIKN005C9

	36	20080052750	A1	2008-02-28	Grunnet-Jepsen Anders et al.	
	37	20080062120	A1	2008-03-13	Wheeler Lorraine et al.	
	38	20080166968	A1	2008-07-10	Tang John et al.	
	39	20080218358	A1	2008-09-11	DERRICK BRUCE	
	40	20080278445	A1	2008-11-13	Sweetser John et al.	
	41	20090074051	B2	2009-03-19	MANAPRAGADA SAI C	
	42	20090207014	A1	2009-08-20	AYED MOURAD BEN	
	43	20090217335	A1	2009-08-27	Wong Richard Sai Kit et al.	
	44	20090237209	A1	2009-09-24	Seal Brian William et al.	
	45	20090240814	A1	2009-09-24	Brubacher	
	46	20090249247	A1	2009-10-01	Tseng	

ALL REFERENCES CONSIDERED EXCEPT WHERE LINED THROUGH. /B.W.T/

INFORMATION DISCLOSURE STATEMENT BY APPLICANT (Not for submission under 37 CFR 1.99)		
	Application Number	
	Filing Date	2022-01-19
	First Named Inventor	John W. Howard
	Art Unit	
	Examiner Name	
	Attorney Docket Number	BIKN005C9

	47	20090284664	A1	2009-11-19	Barry Keith et al.	
	48	20110210849	A1	2011-09-01	Howard John W. et al.	
	49	20110210959	A1	2011-09-01	Howard	
	50	20110212699	A1	2011-09-01	Howard	
	51	20110212702	A1	2011-09-01	Howard	
	52	20110215921	A1	2011-09-08	Ben Ayed	
	53	20120077439	A1	2012-03-29	Howard	
	54	20140194148	A1	2014-07-10	Griffin	
	55	20160227362		2016-08-04	Howard	
	56	20180192236	A1	2018-07-05	Howard	

If you wish to add additional U.S. Published Application citation information please click the Add button. Add

FOREIGN PATENT DOCUMENTS Remove

EFS Web 2.1.18

ALL REFERENCES CONSIDERED EXCEPT WHERE LINED THROUGH. /B.W.T/

INFORMATION DISCLOSURE STATEMENT BY APPLICANT (Not for submission under 37 CFR 1.99)		
	Application Number	
	Filing Date	2022-01-19
	First Named Inventor	John W. Howard
	Art Unit	
	Examiner Name	
	Attorney Docket Number	BIKN005C9

Examiner Initial*	Cite No	Foreign Document Number[3]	Country Code[2]¡	Kind Code[4]	Publication Date	Name of Patentee or Applicant of cited Document	Pages,Columns,Lines where Relevant Passages or Relevant Figures Appear	T[5]
	1	2006022645	WO	A1	2006-03-02	Cochlear Americas		

If you wish to add additional Foreign Patent Document citation information please click the Add button Add

NON-PATENT LITERATURE DOCUMENTS Remove

Examiner Initials*	Cite No	Include name of the author (in CAPITAL LETTERS), title of the article (when appropriate), title of the item (book, magazine, journal, serial, symposium, catalog, etc), date, pages(s), volume-issue number(s), publisher, city and/or country where published.	T[5]
	1	International Preliminary Report on Patentability; PCT Application No. PCT/US11/24923; February 10, 2012, 11 pages	
	2	International Search Report, Application Number PCTIUS2011/024923, April 19, 2011, 11 Pages	

If you wish to add additional non-patent literature document citation information please click the Add button Add

EXAMINER SIGNATURE

Examiner Signature	/BARRY W TAYLOR/	Date Considered	03/22/2022

*EXAMINER: Initial if reference considered, whether or not citation is in conformance with MPEP 609. Draw line through a citation if not in conformance and not considered. Include copy of this form with next communication to applicant.

[1] See Kind Codes of USPTO Patent Documents at www.USPTO.GOV or MPEP 901.04. [2] Enter office that issued the document, by the two-letter code (WIPO Standard ST.3). [3] For Japanese patent documents, the indication of the year of the reign of the Emperor must precede the serial number of the patent document. [4] Kind of document by the appropriate symbols as indicated on the document under WIPO Standard ST.16 if possible. [5] Applicant is to place a check mark here if English language translation is attached.

ALL REFERENCES CONSIDERED EXCEPT WHERE LINED THROUGH. /B.W.T/

INFORMATION DISCLOSURE STATEMENT BY APPLICANT (Not for submission under 37 CFR 1.99)		
	Application Number	
	Filing Date	2022-01-19
	First Named Inventor	John W. Howard
	Art Unit	
	Examiner Name	
	Attorney Docket Number	BIKN005C9

CERTIFICATION STATEMENT

Please see 37 CFR 1.97 and 1.98 to make the appropriate selection(s):

That each item of information contained in the information disclosure statement was first cited in any communication from a foreign patent office in a counterpart foreign application not more than three months prior to the filing of the information disclosure statement. See 37 CFR 1.97(e)(1).

OR

☐ That no item of information contained in the information disclosure statement was cited in a communication from a foreign patent office in a counterpart foreign application, and, to the knowledge of the person signing the certification after making reasonable inquiry, no item of information contained in the information disclosure statement was known to any individual designated in 37 CFR 1.56(c) more than three months prior to the filing of the information disclosure statement. See 37 CFR 1.97(e)(2).

See attached certification statement.

The fee set forth in 37 CFR 1.17 (p) has been submitted herewith.

☒ A certification statement is not submitted herewith.

SIGNATURE

A signature of the applicant or representative is required in accordance with CFR 1.33, 10.18. Please see CFR 1.4(d) for the form of the signature.

Signature	/Bruce E. Stuckman, Ph.D./	Date (YYYY-MM-DD)	2022-01-19
Name/Print	Bruce E. Stuckman, Ph.D.	Registration Number	36693

This collection of information is required by 37 CFR 1.97 and 1.98. The information is required to obtain or retain a benefit by the public which is to file (and by the USPTO to process) an application. Confidentiality is governed by 35 U.S.C. 122 and 37 CFR 1.14. This collection is estimated to take 1 hour to complete, including gathering, preparing and submitting the completed application form to the USPTO. Time will vary depending upon the individual case. Any comments on the amount of time you require to complete this form and/or suggestions for reducing this burden, should be sent to the Chief Information Officer, U.S. Patent and Trademark Office, U.S. Department of Commerce, P.O. Box 1450, Alexandria, VA 22313-1450. DO NOT SEND FEES OR COMPLETED FORMS TO THIS ADDRESS. **SEND TO: Commissioner for Patents, P.O. Box 1450, Alexandria, VA 22313-1450.**

ALL REFERENCES CONSIDERED EXCEPT WHERE LINED THROUGH. /B.W.T/

Privacy Act Statement

The Privacy Act of 1974 (P.L. 93-579) requires that you be given certain information in connection with your submission of the attached form related to a patent application or patent. Accordingly, pursuant to the requirements of the Act, please be advised that: (1) the general authority for the collection of this information is 35 U.S.C. 2(b)(2); (2) furnishing of the information solicited is voluntary; and (3) the principal purpose for which the information is used by the U.S. Patent and Trademark Office is to process and/or examine your submission related to a patent application or patent. If you do not furnish the requested information, the U.S. Patent and Trademark Office may not be able to process and/or examine your submission, which may result in termination of proceedings or abandonment of the application or expiration of the patent.

The information provided by you in this form will be subject to the following routine uses:

1. The information on this form will be treated confidentially to the extent allowed under the Freedom of Information Act (5 U.S.C. 552) and the Privacy Act (5 U.S.C. 552a). Records from this system of records may be disclosed to the Department of Justice to determine whether the Freedom of Information Act requires disclosure of these record s.

2. A record from this system of records may be disclosed, as a routine use, in the course of presenting evidence to a court, magistrate, or administrative tribunal, including disclosures to opposing counsel in the course of settlement negotiations.

3. A record in this system of records may be disclosed, as a routine use, to a Member of Congress submitting a request involving an individual, to whom the record pertains, when the individual has requested assistance from the Member with respect to the subject matter of the record.

4. A record in this system of records may be disclosed, as a routine use, to a contractor of the Agency having need for the information in order to perform a contract. Recipients of information shall be required to comply with the requirements of the Privacy Act of 1974, as amended, pursuant to 5 U.S.C. 552a(m).

5. A record related to an International Application filed under the Patent Cooperation Treaty in this system of records may be disclosed, as a routine use, to the International Bureau of the World Intellectual Property Organization, pursuant to the Patent Cooperation Treaty.

6. A record in this system of records may be disclosed, as a routine use, to another federal agency for purposes of National Security review (35 U.S.C. 181) and for review pursuant to the Atomic Energy Act (42 U.S.C. 218(c)).

7. A record from this system of records may be disclosed, as a routine use, to the Administrator, General Services, or his/her designee, during an inspection of records conducted by GSA as part of that agency's responsibility to recommend improvements in records management practices and programs, under authority of 44 U.S.C. 2904 and 2906. Such disclosure shall be made in accordance with the GSA regulations governing inspection of records for this purpose, and any other relevant (i.e., GSA or Commerce) directive. Such disclosure shall not be used to make determinations about individuals.

8. A record from this system of records may be disclosed, as a routine use, to the public after either publication of the application pursuant to 35 U.S.C. 122(b) or issuance of a patent pursuant to 35 U.S.C. 151. Further, a record may be disclosed, subject to the limitations of 37 CFR 1.14, as a routine use, to the public if the record was filed in an application which became abandoned or in which the proceedings were terminated and which application is referenced by either a published application, an application open to public inspections or an issued patent.

9. A record from this system of records may be disclosed, as a routine use, to a Federal, State, or local law enforcement agency, if the USPTO becomes aware of a violation or potential violation of law or regulation.

ALL REFERENCES CONSIDERED EXCEPT WHERE LINED THROUGH. /B.W.T/

Certification under 37 C.F.R. §1.8

Date of Mailing or Transmission: April 5, 2022

I hereby certify that I have caused the document indicated herein on the date indicated above to be transmitted via the Office electronic filing system in accordance with 37 C.F.R. §1.6(a)(4).

BY: /Debbie Watson/ (Signature) **Name:** Debbie Watson (Typed Name)

IN THE UNITED STATES PATENT AND TRADEMARK OFFICE

1st Named Inventor:	John W. Howard	**Examiner:**	TAYLOR, BARRY W
Application No.:	17/578,676	**Art Unit:**	2646
Filing Date:	19 Jan 2022	**Docket No.:**	BIKN005C9
Confirmation No.:	1996		
Title:	WIRELESS DEVICE AND METHODS FOR USE THEREWITH		

RESPONSE TO NON-FINAL OFFICE ACTION

Date: April 5, 2022

United States Patent and Trademark Office
P. O. Box 1450
Alexandria, VA 22313-1450

In response to an office action dated April 01, 2022 regarding the above-captioned patent application, the Applicant respectfully submits the following amendment and response, which is being filed within three (3) months of the mailing date thereof.

The three (3) month due date for responding to the office action falls on July 01, 2022, and the Applicant respectfully asserts that this amendment and response being filed on or before July 01, 2022 is timely filed in accordance with M.P.E.P. §710.05, 35 U.S.C. §21, and 37 C.F.R. §1.7.

AMENDMENT TO THE CLAIMS

1. (Original) A mobile communication device comprising:

a plurality of wireless transceivers including a Bluetooth transceiver, a long-range transceiver configured to send and receive telephone calls via a telephony network and to communicate Internet data, and one or more ultra-wideband transceivers coupled to two or more antennas;

a memory that stores operational instructions;

a touch screen; and

a processor coupled to the plurality of wireless transceivers, the memory, and the touch screen, wherein the processor is configured to execute the operational instructions, which upon execution, cause the processor to:

present a graphical user interface via the touch screen;

in response to a pair request from a user received at the graphical user interface, pair the mobile communication device with at least one remote device;

in response to an audio alert request from the user received at the graphical user interface, transmit an audio alert request signal to the at least one remote device via the Bluetooth transceiver;

estimate a distance between the mobile communication device and the at least one remote device based on ultra-wideband communication between the one or more ultra-wideband transceivers and the at least one remote device and time of flight calculations;

determine a direction to the at least one remote device based on signal delay of ultra-wideband communications between the two or more antennas and the at least one remote device; and

output to the graphical user interface the estimated distance to the at least one remote device and an arrow pointing in the direction of the at least one remote device.

2. (Original) The mobile communication device of claim 1, wherein the operational instructions, upon execution, further cause the processor to output to the touch screen an estimated position of the at least one remote device based on information received at one of the plurality of wireless transceivers via a wireless network.

3. (Original) The mobile communication device of claim 2, wherein, the operational instructions, upon execution, further cause the processor to output on the touch screen the estimated position of the at least one remote device based on information received from a second mobile communication device.

4. (Original) The mobile communication device of claim 3, wherein the second mobile communication device is paired with the at least one remote device.

5. (Original) The mobile communication device of claim 3, wherein the second mobile communication device is not paired with the at least one remote device.

6. (Original) The mobile communication device of claim 3, wherein the operational instructions, upon execution, further cause the processor to transmit an audio alert request signal to the at least one remote device via the wireless network.

7. (Original) The mobile communication device of claim 6, wherein the at least one remote device includes a plurality of remote devices and wherein the operational instructions further cause the processor to (i) output to the touch screen a representation of the plurality of remote devices, (ii) receive user input from the touch screen selecting one of the plurality of remote devices, and (iii) output to the touch screen the estimated distance to the selected one of the plurality of remote devices and the direction to the selected one of the plurality of remote devices.

8. (Original) The mobile communication device of claim 7, wherein the operational instructions, upon execution, further cause the processor to receive input from the touch screen defining names for one or more of the plurality of remote devices.

9. (Original) The mobile communication device of claim 7, additionally comprising an orientation sensor coupled to the processor and wherein the operational instructions further cause the processor to determine a direction to one or more of the plurality of remote devices based on a manual rotation of the mobile communication device.

10. (Original) The mobile communication device of claim 9, wherein the operational instructions, upon execution, further cause the processor to determine a direction to one or more of the plurality of remote devices based on a strength of a signal received from the one or more of the plurality of remote devices at one or more of the plurality of wireless transceivers.

11. (Original) A mobile communication device comprising:

a plurality of wireless transceivers including a Bluetooth transceiver, a long-range transceiver configured to send and receive telephone calls via a telephony network and to communicate Internet data, and one or more ultra-wideband transceivers coupled to two or more antennas;

a memory that stores operational instructions;

a touch screen;

an orientation sensor to detect rotation of the mobile communication device; and

a processor coupled to the plurality of wireless transceivers, the memory, the touch screen and the orientation sensor, wherein the processor is configured to execute the operational instructions, which upon execution, cause the processor to:

present a graphical user interface via the touch screen;

in response to a pair request from a user received at the graphical user interface, pair the mobile communication device with at least one remote device;

in response to an audio alert request from the user received at the graphical user interface, transmit an audio alert request signal to the at least one remote device via the Bluetooth transceiver;

estimate a distance between the mobile communication device and the at least one remote device based on ultra-wideband communication between the one or more ultra-wideband transceivers and the at least one remote device and time of flight calculations;

determine a direction to the at least one remote device based on signal delay of ultra-wideband communications between the two or more antennas and the at least one remote device and on rotation of the mobile communication device detected by the orientation sensor; and

output to the graphical user interface the estimated distance to the at least one remote device and an arrow pointing in the direction of the at least one remote device.

12. (Original) The mobile communication device of claim 11, wherein the at least one remote device includes a plurality of remote devices and wherein the operational instructions further cause the processor to (i) output to the touch screen a representation of the plurality of remote devices, (ii) receive user input from the touch screen selecting one of the plurality of remote devices, and (iii) output to the touch screen the estimated distance to the selected one of the plurality of remote devices and the direction to the selected one of the plurality of remote devices.

13. (Original) The mobile communication device of claim 12, wherein the operational instructions, upon execution, further cause the processor to receive input from the touch screen defining names for one or more of the plurality of remote devices.

14. (Original) The mobile communication device of claim 13, wherein the operational instructions, upon execution, further cause the processor to determine the direction to one or more

of the plurality of remote devices based on a strength of a signal received from the one or more of the plurality of remote devices at one or more of the plurality of wireless transceivers.

15. (Original) The mobile communication device of claim 14, wherein the operational instructions, upon execution, further cause the processor to output to the touch screen an estimated position of the one or more of the plurality of remote devices based on information received at one of the plurality of wireless transceivers from a wireless network.

16. (Original) The mobile communication device of claim 15, wherein the operational instructions, upon execution, further cause the processor to output on the touch screen an estimated position of the one or more of the plurality of remote devices based on information received from a second mobile communication device.

17. (Original) The mobile communication device of claim 16, wherein the second mobile communication device is paired with the at least one remote device.

18. (Original) The mobile communication device of claim 16, wherein the second mobile communication device is not paired with the at least one remote device.

19. (Original) The mobile communication device of claim 16, wherein the operational instructions, upon execution, further cause the processor to transmit an audio alert request signal to the at least one remote device via the wireless network.

20. (Original) A mobile communication device comprising:

a plurality of wireless transceivers including a Bluetooth transceiver, a long-range transceiver configured to send and receive telephone calls via a telephony network and to communicate Internet data and one or more ultra-wideband transceivers coupled to two or more antennas;

a memory that stores operational instructions;

a touch screen; and

a processor coupled to the memory and to the touch screen, wherein the processor is configured to execute the operational instructions, which upon execution, cause the processor to:

present a graphical user interface via the touch screen;

generate pairing signals in response to indications from a user via the graphical user interface to pair the mobile communication device to each of a plurality of remote devices, wherein the Bluetooth transceiver responds to the pairing signals by communicating RF signals to pair the mobile communication device to each of the plurality of remote devices, wherein a unique device identifier associated with each of the plurality of remote devices is shared with the mobile communication device during pairing;

display, via the graphical user interface, a name associated with each of the plurality of remote devices;

receive a selection of a selected remote device of the plurality of remote devices in response to selection, via the graphical user interface, of the name associated with the selected remote device, wherein the graphical user interface visually indicates the selection of the selected remote device;

determine whether the selected remote device is in range of the Bluetooth transceiver, wherein the selected remote device is determined to be in range of the Bluetooth transceiver based on reception, via the Bluetooth transceiver, of a beacon from the selected remote device;

generate an audio alert signal in response to a second indication from the user via the graphical user interface, wherein the Bluetooth transceiver transmits a first RF signal to the selected remote device in response to the audio alert signal, wherein the first RF signal indicates a request to the selected remote device to emit an audio alert to audibly assist the user in determining a location of the selected remote device;

determine an estimated distance to the selected remote device, based on the reception, via the Bluetooth transceiver, of the beacon from the selected remote device; and

present at least one display, via the graphical user interface, wherein the at least one display includes an estimated position of the selected remote device on a map, and wherein the at least one display indicates the estimated distance to the selected remote device.

21. (Original) The mobile communication device of claim 20, wherein the estimated position of the selected remote device is determined based on information received at one of the plurality of wireless transceivers via a wireless network.

22. (Original) The mobile communication device of claim 21, wherein the information is received from a second mobile communication device.

23. (Original) The mobile communication device of claim 22, wherein the information indicates one or more of: position information, signal strength information, proximity information, or coordinate information.

24. (Original) The mobile communication device of claim 23, wherein the information is based on GPS coordinates.

25. (Original) The mobile communication device of claim 22 wherein the second mobile communication device is paired with the selected remote device.

26. (Original) The mobile communication device of claim 22 wherein the second mobile communication device is not paired with the selected remote device.

27. (Original) The mobile communication device of claim 20, wherein the estimated distance to the selected remote device is determined based on a strength of the beacon from the selected remote device.

28. (Original) The mobile communication device of claim 27, wherein the estimated distance to the selected remote device is determined based on at least three distance ranges.

29. (Original) The mobile communication device of claim 28 wherein the at least three distance ranges include a long-range distance, a midrange distance that is less than the long-range distance, and a short-range distance that is less than the midrange distance.

30. (Original) A mobile communication device comprising:

a plurality of wireless transceivers including a Bluetooth transceiver, a long-range transceiver configured to send and receive telephone calls via a telephony network and to communicate Internet data and one or more ultra-wideband transceivers coupled to two or more antennas;

a memory that stores operational instructions;

an orientation sensor;

a touch screen; and

a processor coupled to the memory and to the touch screen, wherein the processor is configured to execute the operational instructions, which upon execution, cause the processor to:

present a graphical user interface via the touch screen;

generate pairing signals in response to indications from a user via the graphical user interface to pair the mobile communication device to each of a plurality of remote devices, wherein the Bluetooth transceiver responds to the pairing signals by communicating RF signals to pair the mobile communication device to each of the plurality of remote devices, wherein a unique device identifier associated with each of the plurality of remote devices is shared with the mobile communication device during pairing;

display, via the graphical user interface, a name of an item associated with each remote device of the plurality of remote devices;

receive a selection of one remote device of the plurality of remote devices in response to selection, via the graphical user interface, of the name of the item associated with the one remote device, wherein the graphical user interface visually indicates the selection of the one remote device;

determine whether the one remote device is in range of the Bluetooth transceiver, wherein the one remote device is determined to be in range of the Bluetooth transceiver based on reception, via the Bluetooth transceiver, of a beacon from the one remote device;

generate an audio alert signal in response to a second indication from the user via the graphical user interface, wherein the Bluetooth transceiver transmits a first RF signal to the one remote device in response to the audio alert signal, wherein the first RF signal indicates a request to the one remote device to emit an audio alert to audibly assist the user in determining a location of the one remote device;

determine an estimated distance to the one remote device, based on ultra-wideband communication between the one or more ultra-wideband transceivers and the one remote device, and based on time of flight calculations, wherein the ultra-wideband communication includes a second RF signal sent to the one remote device via the one or more ultra-wideband transceivers and a third RF signal received from the one remote device via the one or more ultra-wideband transceivers, wherein the third RF signal is a response to the second RF signal, and wherein the time of flight calculations are based on a time difference between sending the second RF signal and receiving the third RF signal;

determine a direction to the one remote device based on instructions to perform a manual rotation of the mobile communication device over different directions, utilizing the orientation sensor and based on signal delays of signals of the ultra-wideband communications, wherein the signals are received at the one or more ultra-wideband transceivers via the two or more antennas; and

present at least one display, via the graphical user interface, wherein the at least one display includes an estimated position of the one remote device on a map, wherein the at least one display indicates the estimated distance to the one remote device, and wherein the at least one display includes an arrow pointing in the direction to the one remote device.

REMARKS/ARGUMENTS

1. In the above referenced Office Action:

   a. Status of the claims.

      - Claims 1-29 are pending;
      - Claims 1-29 are rejected;
      - Claim 30 is allowed.

   b. Claims 1-4 and 6 have been rejected on the ground of non-statutory double patenting as being unpatentable over claims 10-11 of (U.S. Patent No. 11,265,680) in view of Karaoguz (U.S. Pub. No. 2004/0233972) and Wheeler et al. (U.S. Pub. No. 2008/0062120);

   c. Claims 5 and 7-19 have been rejected on the ground of non-statutory double patenting as being unpatentable over (U.S. Patent No. 11,265,680) in view of Karaoguz (U.S. Pub. No. 2004/0233972) and Wheeler et al. (U.S. Pub. No. 2008/0062120) and further in view of Lee (U.S. Pub. No. 2009/0270093);

   d. Claims 20-29 have been rejected on the ground of non-statutory double patenting as being unpatentable over (U.S. Patent No. 11,265,680) in view of Wheeler et al. (U.S. Pub. No. 2008/0062120) and Lee (U.S. Pub. No. 2009/0270093);

   e. Claim 30 has been allowed.

The rejections and objections have been traversed. Applicant respectfully requests reconsideration of the allowability of claims 1-29.

2. <u>Interview Summary</u>

Applicant's Counsel, Bruce Stuckman, called Examiner Taylor on 4/5/2022 indicating that a terminal disclaimer was being filed and that this response was being prepared.

3. Claims 1-4 and 6 have been rejected on the ground of non-statutory double patenting as being unpatentable over claims 10-11 of (U.S. Patent No. 11,265,680) in view of Karaoguz (U.S. Pub. No. 2004/0233972) and Wheeler et al. (U.S. Pub. No. 2008/0062120). Claims 5 and 7-19 have been rejected on the ground of non-statutory double patenting as being unpatentable over (U.S. Patent No. 11,265,680) in view of Karaoguz (U.S. Pub. No. 2004/0233972) and Wheeler et al. (U.S. Pub. No. 2008/0062120) and further in view of Lee (U.S. Pub. No. 2009/0270093).

Claims 20-29 have been rejected on the ground of non-statutory double patenting as being unpatentable over (U.S. Patent No. 11,265,680) in view of Wheeler et al. (U.S. Pub. No. 2008/0062120) and Lee (U.S. Pub. No. 2009/0270093).

A terminal disclaimer is concurrently filed herewith along with a credit card payment of the associated fee. The Applicant respectfully requests that these rejections be withdrawn.

CONCLUSION

For the foregoing reasons, the Applicant believes that claims 1-29 are in condition for allowance and respectfully requests that they be passed to allowance.

The Applicant hereby rescinds any disclaimer of claim scope, if made, in any parent application and/or any predecessor application in relation to the instant application. The Examiner is advised that any such previous disclaimer, if made, and any prior art that it was made to avoid, may need to be revisited. Further, the claims in the instant application may be broader than those of any parent application and/or any predecessor application. Moreover, the Examiner should also be advised that any disclaimer made in the instant application should not be read into or against any parent application and/or any predecessor application.

A terminal disclaimer is concurrently filed herewith along with a credit card payment of the associated fee. No additional fees are believed to be due. In the event that additional fees are due or a credit for an overpayment is due, the Commissioner is hereby authorized to charge any additional fees or credit any overpayment to Deposit Account No. 50-2126.

The Examiner is invited to contact the undersigned by e-mail if the Examiner believes that such a communication would advance the prosecution of the present invention.

RESPECTFULLY SUBMITTED,

By: /Bruce Stuckman, Ph.D./Reg. No. 36693
Bruce E. Stuckman

Garlick & Markison
100 Congress Avenue, Suite 2000
Austin, TX 78701
Phone: 512-487-7241
E-mail: bstuckman@texaspatents.com

IN THE UNITED STATES PATENT AND TRADEMARK OFFICE

1st Named Inventor:	John W. Howard	**Examiner:**	TAYLOR, BARRY W
Application No.:	17/578,676	**Art Unit:**	2646
Filing Date:	19 Jan 2022	**Docket No.:**	BIKN005C9
Confirmation No.:	1996		
Title:	WIRELESS DEVICE AND METHODS FOR USE THEREWITH		

AUTHORIZATION FOR INTERNET COMMUNICATIONS IN A PATENT APPLICATION OR REQUEST TO WITHDRAW AUTHORIZATION FOR INTERNET COMMUNICATIONS

I. To authorize permission for Internet Communications.

Recognizing that Internet communications are not secure, I hereby authorize the USPTO to communicate with the undersigned and practitioners in accordance with 37 CFR 1.33 and 37 CFR 1.34 concerning any subject matter of this application via video conferencing, instant messaging, or electronic mail. I understand that a copy of these communications will be made of record in the application file. (MPEP 502.03).

I am the attorney or agent of record. Registration No. 36693.

RESPECTFULLY SUBMITTED,

By: /Bruce Stuckman, Ph.D./Reg. No. 36693
Bruce E. Stuckman

Garlick & Markison
100 Congress Avenue, Suite 2000
Austin, TX 78701
Phone: 512-487-7241
E-mail: bstuckman@texaspatents.com

Electronic Acknowledgement Receipt

EFS ID:	45396067
Application Number:	17578676
International Application Number:	
Confirmation Number:	1996
Title of Invention:	WIRELESS DEVICE AND METHODS FOR USE THEREWITH
First Named Inventor/Applicant Name:	John W. Howard
Customer Number:	34399
Filer:	Bruce Edward Stuckman/Debbie Watson
Filer Authorized By:	Bruce Edward Stuckman
Attorney Docket Number:	BIKN005C9
Receipt Date:	05-APR-2022
Filing Date:	19-JAN-2022
Time Stamp:	11:45:03
Application Type:	Utility under 35 USC 111(a)

Payment information:

Submitted with Payment	no

File Listing:

Document Number	Document Description	File Name	File Size(Bytes)/ Message Digest	Multi Part /.zip	Pages (if appl.)
1		BIKN005C9_AMD.pdf	135573 95d28c72fc63bf0ba197437e22d5479944e73164	yes	15

	Multipart Description/PDF files in .zip description		
	Document Description	**Start**	**End**
	Amendment/Request for Reconsideration-After Non-Final Rejection	1	1
	Claims	2	11
	Applicant Arguments/Remarks Made in an Amendment	12	14
	Internet Communications Authorized	15	15
Warnings:			
Information:			
	Total Files Size (in bytes):	135573	

This Acknowledgement Receipt evidences receipt on the noted date by the USPTO of the indicated documents, characterized by the applicant, and including page counts, where applicable. It serves as evidence of receipt similar to a Post Card, as described in MPEP 503.

New Applications Under 35 U.S.C. 111
If a new application is being filed and the application includes the necessary components for a filing date (see 37 CFR 1.53(b)-(d) and MPEP 506), a Filing Receipt (37 CFR 1.54) will be issued in due course and the date shown on this Acknowledgement Receipt will establish the filing date of the application.
National Stage of an International Application under 35 U.S.C. 371
If a timely submission to enter the national stage of an international application is compliant with the conditions of 35 U.S.C. 371 and other applicable requirements a Form PCT/DO/EO/903 indicating acceptance of the application as a national stage submission under 35 U.S.C. 371 will be issued in addition to the Filing Receipt, in due course.
New International Application Filed with the USPTO as a Receiving Office
If a new international application is being filed and the international application includes the necessary components for an international filing date (see PCT Article 11 and MPEP 1810), a Notification of the International Application Number and of the International Filing Date (Form PCT/RO/105) will be issued in due course, subject to prescriptions concerning national security, and the date shown on this Acknowledgement Receipt will establish the international filing date of the application.

Doc Code: DIST.E.FILE **Document Description: Electronic Terminal Disclaimer - Filed**	PTO/SB/26 U.S. Patent and Trademark Office Department of Commerce

Electronic Petition Request	**TERMINAL DISCLAIMER TO OBVIATE A DOUBLE PATENTING REJECTION OVER A "PRIOR" PATENT**
Application Number	17578676
Filing Date	19-Jan-2022
First Named Inventor	John Howard
Attorney Docket Number	BIKN005C9
Title of Invention	WIRELESS DEVICE AND METHODS FOR USE THEREWITH

☒ Filing of terminal disclaimer does not obviate requirement for response under 37 CFR 1.111 to outstanding Office Action

☒ This electronic Terminal Disclaimer is not being used for a Joint Research Agreement.

Owner	Percent Interest
THL HOLDING COMPANY, LLC	100%

The owner(s) with percent interest listed above in the instant application hereby disclaims, except as provided below, the terminal part of the statutory term of any patent granted on the instant application which would extend beyond the expiration date of the full statutory term of prior patent number(s)

11265680

as the term of said prior patent is presently shortened by any terminal disclaimer. The owner hereby agrees that any patent so granted on the instant application shall be enforceable only for and during such period that it and the prior patent are commonly owned. This agreement runs with any patent granted on the instant application and is binding upon the grantee, its successors or assigns.

In making the above disclaimer, the owner does not disclaim the terminal part of the term of any patent granted on the instant application that would extend to the expiration date of the full statutory term of the prior patent, "as the term of said prior patent is presently shortened by any terminal disclaimer," in the event that said prior patent later:
- expires for failure to pay a maintenance fee;
- is held unenforceable;
- is found invalid by a court of competent jurisdiction;
- is statutorily disclaimed in whole or terminally disclaimed under 37 CFR 1.321;
- has all claims canceled by a reexamination certificate;
- is reissued; or
- is in any manner terminated prior to the expiration of its full statutory term as presently shortened by any terminal disclaimer.

◉ Terminal disclaimer fee under 37 CFR 1.20(d) is included with Electronic Terminal Disclaimer request.

○	I certify, in accordance with 37 CFR 1.4(d)(4), that the terminal disclaimer fee under 37 CFR 1.20(d) required for this terminal disclaimer has already been paid in the above-identified application.

Applicant claims the following fee status:

◉ Small Entity

○ Micro Entity

○ Regular Undiscounted

I hereby declare that all statements made herein of my own knowledge are true and that all statements made on information and belief are believed to be true; and further that these statements were made with the knowledge that willful false statements and the like so made are punishable by fine or imprisonment, or both, under Section 1001 of Title 18 of the United States Code and that such willful false statements may jeopardize the validity of the application or any patent issued thereon.

THIS PORTION MUST BE COMPLETED BY THE SIGNATORY OR SIGNATORIES

I certify, in accordance with 37 CFR 1.4(d)(4) that I am:

◉ An attorney or agent registered to practice before the Patent and Trademark Office who is of record in this application

Registration Number 36693

○ A sole inventor

○ A joint inventor; I certify that I am authorized to sign this submission on behalf of all of the inventors as evidenced by the power of attorney in the application

○ A joint inventor; all of whom are signing this request

Signature	/Bruce E. Stuckman, Ph.D./
Name	Bruce E. Stuckman, Ph.D.

*Statement under 37 CFR 3.73(b) is required if terminal disclaimer is signed by the assignee (owner).
Form PTO/SB/96 may be used for making this certification. See MPEP § 324.

Electronic Patent Application Fee Transmittal

Application Number:	17578676
Filing Date:	19-Jan-2022
Title of Invention:	WIRELESS DEVICE AND METHODS FOR USE THEREWITH
First Named Inventor/Applicant Name:	John W. Howard
Filer:	Bruce Edward Stuckman/Debbie Watson
Attorney Docket Number:	BIKN005C9

Filed as Small Entity

Filing Fees for Utility under 35 USC 111(a)

Description	Fee Code	Quantity	Amount	Sub-Total in USD($)
Basic Filing:				
STATUTORY OR TERMINAL DISCLAIMER	2814	1	170	170
Pages:				
Claims:				
Miscellaneous-Filing:				
Petition:				
Patent-Appeals-and-Interference:				
Post-Allowance-and-Post-Issuance:				

Description	Fee Code	Quantity	Amount	Sub-Total in USD($)
Extension-of-Time:				
Miscellaneous:				
			Total in USD ($)	**170**

Doc Code: DISQ.E.FILE
Document Description: Electronic Terminal Disclaimer – Approved

Application No.: 17578676

Filing Date: 19-Jan-2022

Applicant/Patent under Reexamination: Howard

Electronic Terminal Disclaimer filed on April 5, 2022

☒ APPROVED

This patent is subject to a terminal disclaimer

☐ DISAPPROVED

Approved/Disapproved by: Electronic Terminal Disclaimer automatically approved by EFS-Web

U.S. Patent and Trademark Office

Electronic Acknowledgement Receipt	
EFS ID:	45396103
Application Number:	17578676
International Application Number:	
Confirmation Number:	1996
Title of Invention:	WIRELESS DEVICE AND METHODS FOR USE THEREWITH
First Named Inventor/Applicant Name:	John W. Howard
Customer Number:	34399
Filer:	Bruce Edward Stuckman/Debbie Watson
Filer Authorized By:	Bruce Edward Stuckman
Attorney Docket Number:	BIKN005C9
Receipt Date:	05-APR-2022
Filing Date:	19-JAN-2022
Time Stamp:	11:47:27
Application Type:	Utility under 35 USC 111(a)

Payment information:

Submitted with Payment	yes
Payment Type	CARD
Payment was successfully received in RAM	$170
RAM confirmation Number	E202245B47210960
Deposit Account	502126
Authorized User	Debbie Watson
The Director of the USPTO is hereby authorized to charge indicated fees and credit any overpayment as follows: 37 CFR 1.16 (National application filing, search, and examination fees) 37 CFR 1.17 (Patent application and reexamination processing fees)	

37 CFR 1.20 (Post Issuance fees)

File Listing:

Document Number	Document Description	File Name	File Size(Bytes)/ Message Digest	Multi Part /.zip	Pages (if appl.)
1	Terminal Disclaimer-Filed (Electronic)	eTerminal-Disclaimer.pdf	41355 dd6819d5eeab9bf8c75122f2d9afc189c4588d6d	no	2
Warnings:					
Information:					
2	Fee Worksheet (SB06)	fee-info.pdf	38097 fa5f30895881aa45997a7d737e077584c588bc0e	no	2
Warnings:					
Information:					
		Total Files Size (in bytes):	79452		

This Acknowledgement Receipt evidences receipt on the noted date by the USPTO of the indicated documents, characterized by the applicant, and including page counts, where applicable. It serves as evidence of receipt similar to a Post Card, as described in MPEP 503.

New Applications Under 35 U.S.C. 111
If a new application is being filed and the application includes the necessary components for a filing date (see 37 CFR 1.53(b)-(d) and MPEP 506), a Filing Receipt (37 CFR 1.54) will be issued in due course and the date shown on this Acknowledgement Receipt will establish the filing date of the application.
National Stage of an International Application under 35 U.S.C. 371
If a timely submission to enter the national stage of an international application is compliant with the conditions of 35 U.S.C. 371 and other applicable requirements a Form PCT/DO/EO/903 indicating acceptance of the application as a national stage submission under 35 U.S.C. 371 will be issued in addition to the Filing Receipt, in due course.
New International Application Filed with the USPTO as a Receiving Office
If a new international application is being filed and the international application includes the necessary components for an international filing date (see PCT Article 11 and MPEP 1810), a Notification of the International Application Number and of the International Filing Date (Form PCT/RO/105) will be issued in due course, subject to prescriptions concerning national security, and the date shown on this Acknowledgement Receipt will establish the international filing date of the application.

PTO/SB/06 (09-11)
Approved for use through 1/31/2014. OMB 0651-0032
U.S. Patent and Trademark Office; U.S. DEPARTMENT OF COMMERCE
Under the Paperwork Reduction Act of 1995, no persons are required to respond to a collection of information unless it displays a valid OMB control number.

PATENT APPLICATION FEE DETERMINATION RECORD Substitute for Form PTO-875	Application or Docket Number 17/578,676	Filing Date 01/19/2022	☐ To be Mailed

ENTITY: ☐ LARGE ☑ SMALL ☐ MICRO

APPLICATION AS FILED - PART I

FOR	(Column 1) NUMBER FILED	(Column 2) NUMBER EXTRA		RATE ($)	FEE ($)
☐ BASIC FEE (37 CFR 1.16(a), (b), or (c))	N/A	N/A		N/A	
☐ SEARCH FEE (37 CFR 1.16(k), (i), or (m))	N/A	N/A		N/A	
☐ EXAMINATION FEE (37 CFR 1.16(o), (p), or (q))	N/A	N/A		N/A	
TOTAL CLAIMS (37 CFR 1.16(i))	minus 20 =	*		x $50 =	
INDEPENDENT CLAIMS (37 CFR 1.16(h))	minus 3 =	*		x $240 =	
☐ APPLICATION SIZE FEE (37 CFR 1.16(s))	If the specification and drawings exceed 100 sheets of paper, the application size fee due is $310 ($155 for small entity) for each additional 50 sheets or fraction thereof. See 35 U.S.C. 41(a)(1)(G) and 37 CFR 1.16(s).				
☐ MULTIPLE DEPENDENT CLAIM PRESENT (37 CFR 1.16(j))					
* If the difference in column 1 is less than zero, enter "0" in column 2.				TOTAL	

APPLICATION AS AMENDED - PART II

AMENDMENT	04/05/2022	(Column 1) CLAIMS REMAINING AFTER AMENDMENT		(Column 2) HIGHEST NUMBER PREVIOUSLY PAID FOR	(Column 3) PRESENT EXTRA		RATE ($)	ADDITIONAL FEE ($)
	Total (37 CFR 1.16(i))	* 30	Minus	** 30	= 0		x $50 =	0
	Independent (37 CFR 1.16(h))	* 4	Minus	*** 4	= 0		x $240 =	0
	☐ Application Size Fee (37 CFR 1.16(s))							
	☐ FIRST PRESENTATION OF MULTIPLE DEPENDENT CLAIM (37 CFR 1.16(j))							
							TOTAL ADD'L FEE	0

AMENDMENT		(Column 1) CLAIMS REMAINING AFTER AMENDMENT		(Column 2) HIGHEST NUMBER PREVIOUSLY PAID FOR	(Column 3) PRESENT EXTRA		RATE ($)	ADDITIONAL FEE ($)
	Total (37 CFR 1.16(i))	*	Minus	**	=		x $0 =	
	Independent (37 CFR 1.16(h))	*	Minus	***	=		x $0 =	
	☐ Application Size Fee (37 CFR 1.16(s))							
	☐ FIRST PRESENTATION OF MULTIPLE DEPENDENT CLAIM (37 CFR 1.16(j))							
							TOTAL ADD'L FEE	

* If the entry in column 1 is less than the entry in column 2, write "0" in column 3.	SLIE
** If the "Highest Number Previously Paid For" IN THIS SPACE is less than 20, enter "20".	/MONIQUE BENJAMIN/
*** If the "Highest Number Previously Paid For" IN THIS SPACE is less than 3, enter "3".	
The "Highest Number Previously Paid For" (Total or Independent) is the highest number found in the appropriate box in column 1.	

This collection of information is required by 37 CFR 1.16. The information is required to obtain or retain a benefit by the public which is to file (and by the USPTO to process) an application. Confidentiality is governed by 35 U.S.C. 122 and 37 CFR 1.14. This collection is estimated to take 12 minutes to complete, including gathering, preparing, and submitting the completed application form to the USPTO. Time will vary depending upon the individual case. Any comments on the amount of time you require to complete this form and/or suggestions for reducing this burden, should be sent to the Chief Information Officer, U.S. Patent and Trademark Office, U.S. Department of Commerce, P.O. Box 1450, Alexandria, VA 22313-1450. DO NOT SEND FEES OR COMPLETED FORMS TO THIS ADDRESS. **SEND TO: Commissioner for Patents, P.O. Box 1450, Alexandria, VA 22313-1450.**

If you need assistance in completing the form, call 1-800-PTO-9199 and select option 2.

UNITED STATES PATENT AND TRADEMARK OFFICE

UNITED STATES DEPARTMENT OF COMMERCE
United States Patent and Trademark Office
Address: COMMISSIONER FOR PATENTS
P.O. Box 1450
Alexandria, Virginia 22313-1450
www.uspto.gov

NOTICE OF ALLOWANCE AND FEE(S) DUE

34399 7590 04/14/2022
GARLICK & MARKISON
100 CONGRESS AVENUE
SUITE 2000
AUSTIN, TX 78701

EXAMINER
TAYLOR, BARRY W

ART UNIT	PAPER NUMBER
2646	

DATE MAILED: 04/14/2022

APPLICATION NO.	FILING DATE	FIRST NAMED INVENTOR	ATTORNEY DOCKET NO.	CONFIRMATION NO.
17/578,676	01/19/2022	John W. Howard	BIKN005C9	1996

TITLE OF INVENTION: WIRELESS DEVICE AND METHODS FOR USE THEREWITH

APPLN. TYPE	ENTITY STATUS	ISSUE FEE DUE	PUBLICATION FEE DUE	PREV. PAID ISSUE FEE	TOTAL FEE(S) DUE	DATE DUE
nonprovisional	SMALL	$600	$0.00	$0.00	$600	07/14/2022

THE APPLICATION IDENTIFIED ABOVE HAS BEEN EXAMINED AND IS ALLOWED FOR ISSUANCE AS A PATENT. PROSECUTION ON THE MERITS IS CLOSED. THIS NOTICE OF ALLOWANCE IS NOT A GRANT OF PATENT RIGHTS. THIS APPLICATION IS SUBJECT TO WITHDRAWAL FROM ISSUE AT THE INITIATIVE OF THE OFFICE OR UPON PETITION BY THE APPLICANT. SEE 37 CFR 1.313 AND MPEP 1308.

THE ISSUE FEE AND PUBLICATION FEE (IF REQUIRED) MUST BE PAID WITHIN THREE MONTHS FROM THE MAILING DATE OF THIS NOTICE OR THIS APPLICATION SHALL BE REGARDED AS ABANDONED. THIS STATUTORY PERIOD CANNOT BE EXTENDED. SEE 35 U.S.C. 151. THE ISSUE FEE DUE INDICATED ABOVE DOES NOT REFLECT A CREDIT FOR ANY PREVIOUSLY PAID ISSUE FEE IN THIS APPLICATION. IF AN ISSUE FEE HAS PREVIOUSLY BEEN PAID IN THIS APPLICATION (AS SHOWN ABOVE), THE RETURN OF PART B OF THIS FORM WILL BE CONSIDERED A REQUEST TO REAPPLY THE PREVIOUSLY PAID ISSUE FEE TOWARD THE ISSUE FEE NOW DUE.

HOW TO REPLY TO THIS NOTICE:

I. Review the ENTITY STATUS shown above. If the ENTITY STATUS is shown as SMALL or MICRO, verify whether entitlement to that entity status still applies.

If the ENTITY STATUS is the same as shown above, pay the TOTAL FEE(S) DUE shown above.

If the ENTITY STATUS is changed from that shown above, on PART B - FEE(S) TRANSMITTAL, complete section number 5 titled "Change in Entity Status (from status indicated above)".

For purposes of this notice, small entity fees are 1/2 the amount of undiscounted fees, and micro entity fees are 1/2 the amount of small entity fees.

II. PART B - FEE(S) TRANSMITTAL, or its equivalent, must be completed and returned to the United States Patent and Trademark Office (USPTO) with your ISSUE FEE and PUBLICATION FEE (if required). If you are charging the fee(s) to your deposit account, section "4b" of Part B - Fee(s) Transmittal should be completed. If an equivalent of Part B is filed, a request to reapply a previously paid issue fee must be clearly made, and delays in processing may occur due to the difficulty in recognizing the paper as an equivalent of Part B.

III. All communications regarding this application must give the application number. Please direct all communications prior to issuance to Mail Stop ISSUE FEE unless advised to the contrary.

IMPORTANT REMINDER: Maintenance fees are due in utility patents issuing on applications filed on or after Dec. 12, 1980. It is patentee's responsibility to ensure timely payment of maintenance fees when due. More information is available at www.uspto.gov/PatentMaintenanceFees.

PTOL-85 (Rev. 02/11)

PART B - FEE(S) TRANSMITTAL

Complete and send this form, together with applicable fee(s), by mail or fax, or via EFS-Web.

By mail, send to: Mail Stop ISSUE FEE
Commissioner for Patents
P.O. Box 1450
Alexandria, Virginia 22313-1450

By fax, send to: (571)-273-2885

INSTRUCTIONS: This form should be used for transmitting the ISSUE FEE and PUBLICATION FEE (if required). Blocks 1 through 5 should be completed where appropriate. All further correspondence including the Patent, advance orders and notification of maintenance fees will be mailed to the current correspondence address as indicated unless corrected below or directed otherwise in Block 1, by (a) specifying a new correspondence address; and/or (b) indicating a separate "FEE ADDRESS" for maintenance fee notifications.

CURRENT CORRESPONDENCE ADDRESS (Note: Use Block 1 for any change of address)

34399 7590 04/14/2022
GARLICK & MARKISON
100 CONGRESS AVENUE
SUITE 2000
AUSTIN, TX 78701

Note: A certificate of mailing can only be used for domestic mailings of the Fee(s) Transmittal. This certificate cannot be used for any other accompanying papers. Each additional paper, such as an assignment or formal drawing, must have its own certificate of mailing or transmission.

Certificate of Mailing or Transmission

I hereby certify that this Fee(s) Transmittal is being deposited with the United States Postal Service with sufficient postage for first class mail in an envelope addressed to the Mail Stop ISSUE FEE address above, or being transmitted to the USPTO via EFS-Web or by facsimile to (571) 273-2885, on the date below.

(Typed or printed name)

(Signature)

(Date)

APPLICATION NO.	FILING DATE	FIRST NAMED INVENTOR	ATTORNEY DOCKET NO.	CONFIRMATION NO.
17/578,676	01/19/2022	John W. Howard	BIKN005C9	1996

TITLE OF INVENTION: WIRELESS DEVICE AND METHODS FOR USE THEREWITH

APPLN. TYPE	ENTITY STATUS	ISSUE FEE DUE	PUBLICATION FEE DUE	PREV. PAID ISSUE FEE	TOTAL FEE(S) DUE	DATE DUE
nonprovisional	SMALL	$600	$0.00	$0.00	$600	07/14/2022

EXAMINER	ART UNIT	CLASS-SUBCLASS
TAYLOR, BARRY W	2646	455-457000

1. Change of correspondence address or indication of "Fee Address" (37 CFR 1.363).

❑ Change of correspondence address (or Change of Correspondence Address form PTO/AIA/122 or PTO/SB/122) attached.

❑ "Fee Address" indication (or "Fee Address" Indication form PTO/AIA/47 or PTO/SB/47; Rev 03-02 or more recent) attached. **Use of a Customer Number is required.**

2. For printing on the patent front page, list
(1) The names of up to 3 registered patent attorneys or agents OR, alternatively,
(2) The name of a single firm (having as a member a registered attorney or agent) and the names of up to 2 registered patent attorneys or agents. If no name is listed, no name will be printed.

1_____
2_____
3_____

3. ASSIGNEE NAME AND RESIDENCE DATA TO BE PRINTED ON THE PATENT (print or type)

PLEASE NOTE: Unless an assignee is identified below, no assignee data will appear on the patent. If an assignee is identified below, the document must have been previously recorded, or filed for recordation, as set forth in 37 CFR 3.11 and 37 CFR 3.81(a). Completion of this form is NOT a substitute for filing an assignment.

(A) NAME OF ASSIGNEE (B) RESIDENCE: (CITY and STATE OR COUNTRY)

Please check the appropriate assignee category or categories (will not be printed on the patent) : ❑ Individual ❑ Corporation or other private group entity ❑ Government

4a. Fees submitted: ❑Issue Fee ❑Publication Fee (if required) ❑Advance Order - # of Copies _____

4b. Method of Payment: *(Please first reapply any previously paid fee shown above)*

❑ Electronic Payment via EFS-Web ❑ Enclosed check ❑ Non-electronic payment by credit card (Attach form PTO-2038)

❑ The Director is hereby authorized to charge the required fee(s), any deficiency, or credit any overpayment to Deposit Account No. _____

5. **Change in Entity Status** (from status indicated above)

❑ Applicant certifying micro entity status. See 37 CFR 1.29

❑ Applicant asserting small entity status. See 37 CFR 1.27

❑ Applicant changing to regular undiscounted fee status.

NOTE: Absent a valid certification of Micro Entity Status (see forms PTO/SB/15A and 15B), issue fee payment in the micro entity amount will not be accepted at the risk of application abandonment.
NOTE: If the application was previously under micro entity status, checking this box will be taken to be a notification of loss of entitlement to micro entity status.
NOTE: Checking this box will be taken to be a notification of loss of entitlement to small or micro entity status, as applicable.

NOTE: This form must be signed in accordance with 37 CFR 1.31 and 1.33. See 37 CFR 1.4 for signature requirements and certifications.

Authorized Signature _____ Date _____

Typed or printed name _____ Registration No. _____

IPR2024-00400
Apple EX1002 Page 274

UNITED STATES PATENT AND TRADEMARK OFFICE

UNITED STATES DEPARTMENT OF COMMERCE
United States Patent and Trademark Office
Address: COMMISSIONER FOR PATENTS
P.O. Box 1450
Alexandria, Virginia 22313-1450
www.uspto.gov

APPLICATION NO.	FILING DATE	FIRST NAMED INVENTOR	ATTORNEY DOCKET NO.	CONFIRMATION NO.
17/578,676	01/19/2022	John W. Howard	BIKN005C9	1996

34399 7590 04/14/2022
GARLICK & MARKISON
100 CONGRESS AVENUE
SUITE 2000
AUSTIN, TX 78701

EXAMINER
TAYLOR, BARRY W

ART UNIT	PAPER NUMBER
2646	

DATE MAILED: 04/14/2022

Determination of Patent Term Adjustment under 35 U.S.C. 154 (b)
(Applications filed on or after May 29, 2000)

The Office has discontinued providing a Patent Term Adjustment (PTA) calculation with the Notice of Allowance.

Section 1(h)(2) of the AIA Technical Corrections Act amended 35 U.S.C. 154(b)(3)(B)(i) to eliminate the requirement that the Office provide a patent term adjustment determination with the notice of allowance. See Revisions to Patent Term Adjustment, 78 Fed. Reg. 19416, 19417 (Apr. 1, 2013). Therefore, the Office is no longer providing an initial patent term adjustment determination with the notice of allowance. The Office will continue to provide a patent term adjustment determination with the Issue Notification Letter that is mailed to applicant approximately three weeks prior to the issue date of the patent, and will include the patent term adjustment on the patent. Any request for reconsideration of the patent term adjustment determination (or reinstatement of patent term adjustment) should follow the process outlined in 37 CFR 1.705.

Any questions regarding the Patent Term Extension or Adjustment determination should be directed to the Office of Patent Legal Administration at (571)-272-7702. Questions relating to issue and publication fee payments should be directed to the Customer Service Center of the Office of Patent Publication at 1-(888)-786-0101 or (571)-272-4200.

PTOL-85 (Rev. 02/11)

OMB Clearance and PRA Burden Statement for PTOL-85 Part B

The Paperwork Reduction Act (PRA) of 1995 requires Federal agencies to obtain Office of Management and Budget approval before requesting most types of information from the public. When OMB approves an agency request to collect information from the public, OMB (i) provides a valid OMB Control Number and expiration date for the agency to display on the instrument that will be used to collect the information and (ii) requires the agency to inform the public about the OMB Control Number's legal significance in accordance with 5 CFR 1320.5(b).

The information collected by PTOL-85 Part B is required by 37 CFR 1.311. The information is required to obtain or retain a benefit by the public which is to file (and by the USPTO to process) an application. Confidentiality is governed by 35 U.S.C. 122 and 37 CFR 1.14. This collection is estimated to take 30 minutes to complete, including gathering, preparing, and submitting the completed application form to the USPTO. Time will vary depending upon the individual case. Any comments on the amount of time you require to complete this form and/or suggestions for reducing this burden, should be sent to the Chief Information Officer, U.S. Patent and Trademark Office, U.S. Department of Commerce, P.O. Box 1450, Alexandria, Virginia 22313-1450. DO NOT SEND FEES OR COMPLETED FORMS TO THIS ADDRESS. SEND TO: Commissioner for Patents, P.O. Box 1450, Alexandria, Virginia 22313-1450. Under the Paperwork Reduction Act of 1995, no persons are required to respond to a collection of information unless it displays a valid OMB control number.

Privacy Act Statement

The Privacy Act of 1974 (P.L. 93-579) requires that you be given certain information in connection with your submission of the attached form related to a patent application or patent. Accordingly, pursuant to the requirements of the Act, please be advised that: (1) the general authority for the collection of this information is 35 U.S.C. 2(b)(2); (2) furnishing of the information solicited is voluntary; and (3) the principal purpose for which the information is used by the U.S. Patent and Trademark Office is to process and/or examine your submission related to a patent application or patent. If you do not furnish the requested information, the U.S. Patent and Trademark Office may not be able to process and/or examine your submission, which may result in termination of proceedings or abandonment of the application or expiration of the patent.

The information provided by you in this form will be subject to the following routine uses:

1. The information on this form will be treated confidentially to the extent allowed under the Freedom of Information Act (5 U.S.C. 552) and the Privacy Act (5 U.S.C 552a). Records from this system of records may be disclosed to the Department of Justice to determine whether disclosure of these records is required by the Freedom of Information Act.
2. A record from this system of records may be disclosed, as a routine use, in the course of presenting evidence to a court, magistrate, or administrative tribunal, including disclosures to opposing counsel in the course of settlement negotiations.
3. A record in this system of records may be disclosed, as a routine use, to a Member of Congress submitting a request involving an individual, to whom the record pertains, when the individual has requested assistance from the Member with respect to the subject matter of the record.
4. A record in this system of records may be disclosed, as a routine use, to a contractor of the Agency having need for the information in order to perform a contract. Recipients of information shall be required to comply with the requirements of the Privacy Act of 1974, as amended, pursuant to 5 U.S.C. 552a(m).
5. A record related to an International Application filed under the Patent Cooperation Treaty in this system of records may be disclosed, as a routine use, to the International Bureau of the World Intellectual Property Organization, pursuant to the Patent Cooperation Treaty.
6. A record in this system of records may be disclosed, as a routine use, to another federal agency for purposes of National Security review (35 U.S.C. 181) and for review pursuant to the Atomic Energy Act (42 U.S.C. 218(c)).
7. A record from this system of records may be disclosed, as a routine use, to the Administrator, General Services, or his/her designee, during an inspection of records conducted by GSA as part of that agency's responsibility to recommend improvements in records management practices and programs, under authority of 44 U.S.C. 2904 and 2906. Such disclosure shall be made in accordance with the GSA regulations governing inspection of records for this purpose, and any other relevant (i.e., GSA or Commerce) directive. Such disclosure shall not be used to make determinations about individuals.
8. A record from this system of records may be disclosed, as a routine use, to the public after either publication of the application pursuant to 35 U.S.C. 122(b) or issuance of a patent pursuant to 35 U.S.C. 151. Further, a record may be disclosed, subject to the limitations of 37 CFR 1.14, as a routine use, to the public if the record was filed in an application which became abandoned or in which the proceedings were terminated and which application is referenced by either a published application, an application open to public inspection or an issued patent.
9. A record from this system of records may be disclosed, as a routine use, to a Federal, State, or local law enforcement agency, if the USPTO becomes aware of a violation or potential violation of law or regulation.

Notice of Allowability	Application No. 17/578,676	Applicant(s) Howard et al.	
	Examiner BARRY W TAYLOR	Art Unit 2646	AIA (FITF) Status No

-- The MAILING DATE of this communication appears on the cover sheet with the correspondence address--

All claims being allowable, PROSECUTION ON THE MERITS IS (OR REMAINS) CLOSED in this application. If not included herewith (or previously mailed), a Notice of Allowance (PTOL-85) or other appropriate communication will be mailed in due course. **THIS NOTICE OF ALLOWABILITY IS NOT A GRANT OF PATENT RIGHTS.** This application is subject to withdrawal from issue at the initiative of the Office or upon petition by the applicant. See 37 CFR 1.313 and MPEP 1308.

1. ☑ This communication is responsive to T.D. 4/5/2022.
   ☐ A declaration(s)/affidavit(s) under **37 CFR 1.130(b)** was/were filed on _____.

2. ☐ An election was made by the applicant in response to a restriction requirement set forth during the interview on _____; the restriction requirement and election have been incorporated into this action.

3. ☑ The allowed claim(s) is/are 1-30 . As a result of the allowed claim(s), you may be eligible to benefit from the **Patent Prosecution Highway** program at a participating intellectual property office for the corresponding application. For more information, please see **http://www.uspto.gov/patents/init_events/pph/index.jsp** or send an inquiry to **PPHfeedback@uspto.gov.**

4. ☐ Acknowledgment is made of a claim for foreign priority under 35 U.S.C. § 119(a)-(d) or (f).

   Certified copies:

   a) ☐ All b) ☐ Some* c) ☐ None of the:

   1. ☐ Certified copies of the priority documents have been received.
   2. ☐ Certified copies of the priority documents have been received in Application No. _____ .
   3. ☐ Copies of the certified copies of the priority documents have been received in this national stage application from the International Bureau (PCT Rule 17.2(a)).

   * Certified copies not received: _____ .

Applicant has THREE MONTHS FROM THE "MAILING DATE" of this communication to file a reply complying with the requirements noted below. Failure to timely comply will result in ABANDONMENT of this application.
THIS THREE-MONTH PERIOD IS NOT EXTENDABLE.

5. ☐ CORRECTED DRAWINGS (as "replacement sheets") must be submitted.
   ☐ including changes required by the attached Examiner's Amendment / Comment or in the Office action of Paper No./Mail Date _____ .

   Identifying indicia such as the application number (see 37 CFR 1.84(c)) should be written on the drawings in the front (not the back) of each sheet. Replacement sheet(s) should be labeled as such in the header according to 37 CFR 1.121(d).

6. ☐ DEPOSIT OF and/or INFORMATION about the deposit of BIOLOGICAL MATERIAL must be submitted. Note the attached Examiner's comment regarding REQUIREMENT FOR THE DEPOSIT OF BIOLOGICAL MATERIAL.

Attachment(s)

1. ☑ Notice of References Cited (PTO-892)
2. ☐ Information Disclosure Statements (PTO/SB/08), Paper No./Mail Date _____.
3. ☐ Examiner's Comment Regarding Requirement for Deposit of Biological Material _____.
4. ☑ Interview Summary (PTO-413), Paper No./Mail Date. _____.
5. ☐ Examiner's Amendment/Comment
6. ☐ Examiner's Statement of Reasons for Allowance
7. ☐ Other _____.

/BARRY W TAYLOR/
Primary Examiner, Art Unit 2646

DETAILED ACTION

Notice of Pre-AIA or AIA Status

The present application is being examined under the pre-AIA first to invent provisions.

Allowable Subject Matter

1. Claims 1-30 are allowed.

2. The following is an examiner's statement of reasons for allowance.

Regarding claims 1-30. Applicant in filing the Terminal Disclaimer (4/5/2022) has overcome the non-statutory double patent rejection.

Any comments considered necessary by applicant must be submitted no later than the payment of the issue fee and, to avoid processing delays, should preferably accompany the issue fee. Such submissions should be clearly labeled "Comments on Statement of Reasons for Allowance."

Conclusion

3. The prior art made of record and not relied upon is considered pertinent to applicant's disclosure.

---(2004/0233872) Karaoguz teaches transmitting UWB pulses to a plurality of devices. Then the devices transmits UWB pulses back. Finally, ranging is then performed using a time duration of a round trip of the UWB pulses thereby determining relative precise positions of the devices (0020, 0093).

---(2008/0062120) Wheeler et al teaches an arrow is used on mom's phone enabling mom to quickly locate at least one remote device associated with a child (figure 4, 0040).

---(2009/0270093) Lee teaches an orientation sensor (figure 1, item 140) to detect orientation or acceleration of the wireless device (0038). Lee teaches displaying distance and direction of the paired devices (0091). Displays wireless devices on the pairing list according to each type based on each distance or signal strength. In addition, display 2D or 3D (0105-0106, 0119). Figures 9B, 9C and 9D and 0109-0110 – display paired device(s) according to direction and power levels and can also display the names of the paired devices (0111, 0116). For example, figures 9B-9D show an area 1 can be for wireless devices within 1m, the area 2 can be for wireless devices within 2m, and the area 3 can be for devices within 3m. Thus, the user can easily see the names and locations of the wireless devices, and select a particular device (0117). Lee teaches the user can set a Range Setting for Ultra-Wideband pairing (0033). For example, the user selects the range 1m and ONLY the devices within 1M are display for the user to select (figures 6A-6B, 0091-0099) and the other devices outside the range of 1M are not displayed (e.g., not paired).

---(5,379,447) Bonta et al teaches determining distance between devices by using round-trip signal delays (col. 3 lines 8-15).

4. Any inquiry concerning this communication or earlier communications from the examiner should be directed to BARRY W TAYLOR whose telephone number is (571)272-7509. The examiner can normally be reached on Monday-Thursday: 7-5.

Examiner interviews are available via telephone, in-person, and video conferencing using a USPTO supplied web-based collaboration tool. To schedule an interview, applicant is encouraged to use the USPTO Automated Interview Request (AIR) at http://www.uspto.gov/interviewpractice.

If attempts to reach the examiner by telephone are unsuccessful, the examiner's supervisor, Lester Kincaid can be reached on 571-272-7922. The fax phone number for the organization where this application or proceeding is assigned is 571-273-8300.

Information regarding the status of an application may be obtained from the Patent Application Information Retrieval (PAIR) system. Status information for published applications may be obtained from either Private PAIR or Public PAIR. Status information for unpublished applications is available through Private PAIR only. For more information about the PAIR system, see http://pair-direct.uspto.gov. Should you have questions on access to the Private PAIR system, contact the Electronic Business Center (EBC) at 866-217-9197 (toll-free). If you would like assistance from a USPTO Customer Service Representative or access to the automated information system, call 800-786-9199 (IN USA OR CANADA) or 571-272-1000.

/BARRY W TAYLOR/
Primary Examiner, Art Unit 2646

Applicant-Initiated Interview Summary	**Application No.** 17/578,676	**Applicant(s)** Howard et al.		
	Examiner BARRY W TAYLOR	**Art Unit** 2646	**AIA (First Inventor to File) Status** No	**Page** 1 of 1

All Participants (applicant, applicants representative, PTO personnel)	**Title**	**Type**
BARRY W TAYLOR	Primary Examiner	Telephonic
Bruce Stuckman (36,693)	Attorney of Record	

Date of Interview: 05 April 2022

Issues Discussed:

Non-statutory Double Patenting

The attorney of record indicated the application is a Track One application and a terminal disclaimer was being filed. The Examiner indicated the terminal disclosure would overcome the non-statutory double patent rejection.

/BARRY W TAYLOR/ Primary Examiner, Art Unit 2646	

Applicant is reminded that a complete written statement as to the substance of the interview must be made of record in the application file. It is the applicants responsibility to provide the written statement, unless the interview was initiated by the Examiner and the Examiner has indicated that a written summary will be provided. See MPEP 713.04
Please further see:
MPEP 713.04
Title 37 Code of Federal Regulations (CFR) § 1.133 Interviews, paragraph (b)
37 CFR § 1.2 Business to be transacted in writing

Applicant recordation instructions: The formal written reply to the last Office action must include the substance of the interview. (See MPEP section 713.04). If a reply to the last Office action has already been filed, applicant is given a non-extendable period of the longer of one month or thirty days from this interview date, or the mailing date of this interview summary form, whichever is later, to file a statement of the substance of the interview.

Examiner recordation instructions: Examiners must summarize the substance of any interview of record. A complete and proper recordation of the substance of an interview should include the items listed in MPEP 713.04 for complete and proper recordation including the identification of the general thrust of each argument or issue discussed, a general indication of any other pertinent matters discussed regarding patentability and the general results or outcome of the interview, to include an indication as to whether or not agreement was reached on the issues raised.

Notice of References Cited	Application/Control No. 17/578,676	Applicant(s)/Patent Under Reexamination Howard et al.	
	Examiner BARRY W TAYLOR	Art Unit 2646	Page 1 of 1

U.S. PATENT DOCUMENTS

*		Document Number Country Code-Number-Kind Code	Date MM-YYYY	Name	CPC Classification	US Classification
*	A	US-5379447-A	01-1995	Bonta; Jeffrey D.	H04W36/30	455/437
*	B	US-20040233972-A1	11-2004	Karaoguz, Jeyhan	H04B1/719	375/141
*	C	US-20080062120-A1	03-2008	Wheeler; Lorraine	G08B25/016	345/156
*	D	US-20090270093-A1	10-2009	LEE; Dong-Hyun	H04L67/16	455/434
	E					
	F					
	G					
	H					
	I					
	J					
	K					
	L					
	M					

FOREIGN PATENT DOCUMENTS

*		Document Number Country Code-Number-Kind Code	Date MM-YYYY	Country	Name	CPC Classification
	N					
	O					
	P					
	Q					
	R					
	S					
	T					

NON-PATENT DOCUMENTS

*		Include as applicable: Author, Title Date, Publisher, Edition or Volume, Pertinent Pages)
	U	
	V	
	W	
	X	

*A copy of this reference is not being furnished with this Office action. (See MPEP § 707.05(a).)
Dates in MM-YYYY format are publication dates. Classifications may be US or foreign.

Search Notes	Application/Control No.	Applicant(s)/Patent Under Reexamination
	17/578,676	Howard et al.
	Examiner	**Art Unit**
	BARRY W TAYLOR	2646

CPC - Searched*		
Symbol	**Date**	**Examiner**
H04W 4/ 029, 024, 80, 02	03/22/2022	BWT
H04W 64/00	03/22/2022	BWT
G08B 21/0269, 0272, 0277	03/22/2022	BWT

CPC Combination Sets - Searched*		
Symbol	**Date**	**Examiner**

US Classification - Searched*			
Class	**Subclass**	**Date**	**Examiner**

* See search history printout included with this form or the SEARCH NOTES box below to determine the scope of the search.

Search Notes		
Search Notes	**Date**	**Examiner**
updated search for parent applicaions. google scholar, global dossier and Palmn inventor name.	03/22/2022	BWT
updated the serach for parent applications. google scholar, global dossier and Palm inventor name search.	04/06/2022	BWT

/BARRY W TAYLOR/ Primary Examiner, Art Unit 2646	

IPR2024-00400
Apple EX1002 Page 283

Search Notes	Application/Control No.	Applicant(s)/Patent Under Reexamination
	17/578,676	Howard et al.
	Examiner	**Art Unit**
	BARRY W TAYLOR	2646

Interference Search			
US Class/CPC Symbol	**US Subclass/CPC Group**	**Date**	**Examiner**
H04W	4/ 029, 024, 80, 02	04/06/2022	BWT
H04W	64/00	04/06/2022	BWT
G08B	21/0269, 0272, 0277	04/06/2022	BWT

/BARRY W TAYLOR/ Primary Examiner, Art Unit 2646	

IPR2024-00400
Apple EX1002 Page 284

Issue Classification	Application/Control No.	Applicant(s)/Patent Under Reexamination
	17/578,676	Howard et al.
	Examiner	**Art Unit**
	BARRY W TAYLOR	2646

CPC

Symbol					Type	Version
H04W	/	4	/	029	F	2018-02-01
H04W	/	4	/	80	I	2018-02-01
H04W	/	4	/	024	I	2018-02-01
G08B	/	13	/	1427	I	2013-01-01
G08B	/	21	/	0244	I	2013-01-01
G08B	/	21	/	0247	I	2013-01-01
G08B	/	21	/	0269	I	2013-01-01
G08B	/	21	/	0272	I	2013-01-01
G08B	/	21	/	0277	I	2013-01-01
G08B	/	25	/	016	I	2013-01-01
H04W	/	4	/	02	I	2013-01-01
H04W	/	4	/	20	I	2013-01-01
H04W	/	64	/	00	I	2013-01-01
H04L	/	41	/	0618	I	2013-01-01

CPC Combination Sets

Symbol					Type	Set	Ranking	Version
	/		/					

NONE (Assistant Examiner)	(Date)	**Total Claims Allowed:** 30	
/BARRY W TAYLOR/ Primary Examiner, Art Unit 2646 (Primary Examiner)	06 April 2022 (Date)	O.G. Print Claim(s) 1	O.G. Print Figure 15

U.S. Patent and Trademark Office

Part of Paper No.: 20220406A

IPR2024-00400
Apple EX1002 Page 285

Issue Classification	Application/Control No.	Applicant(s)/Patent Under Reexamination
	17/578,676	Howard et al.
	Examiner	**Art Unit**
	BARRY W TAYLOR	2646

INTERNATIONAL CLASSIFICATION				
CLAIMED				
H04W	/	4	/	029

NON-CLAIMED				
	/		/	

US ORIGINAL CLASSIFICATION	
CLASS	**SUBCLASS**

CROSS REFERENCES(S)						
CLASS	**SUBCLASS (ONE SUBCLASS PER BLOCK)**					

NONE (Assistant Examiner)	(Date)	**Total Claims Allowed:** 30	
/BARRY W TAYLOR/ Primary Examiner, Art Unit 2646 (Primary Examiner)	06 April 2022 (Date)	O.G. Print Claim(s) 1	O.G. Print Figure 15

U.S. Patent and Trademark Office

Part of Paper No.: 20220406A

IPR2024-00400
Apple EX1002 Page 286

Issue Classification	Application/Control No.	Applicant(s)/Patent Under Reexamination
	17/578,676	Howard et al.
	Examiner	**Art Unit**
	BARRY W TAYLOR	2646

☑ Claims renumbered in the same order as presented by applicant ☐ CPA ☑ T.D. ☐ R.1.47

CLAIMS

Final	Original	Final	Original	Final	Original	Final	Original	Final	Original	Final	Original	Final	Original	Final	Original
1	1	10	10	19	19	28	28								
2	2	11	11	20	20	29	29								
3	3	12	12	21	21	30	30								
4	4	13	13	22	22										
5	5	14	14	23	23										
6	6	15	15	24	24										
7	7	16	16	25	25										
8	8	17	17	26	26										
9	9	18	18	27	27										

NONE (Assistant Examiner)	(Date)	**Total Claims Allowed:** 30	
/BARRY W TAYLOR/ Primary Examiner, Art Unit 2646 (Primary Examiner)	06 April 2022 (Date)	O.G. Print Claim(s) 1	O.G. Print Figure 15

U.S. Patent and Trademark Office Part of Paper No.: 20220406A

PE2E SEARCH - Search History (Prior Art)

Ref #	Hits	Search Query	DBs	Default Operator	Plurals	British Equivalents	Time Stamp
L818	339	L396 AND (@ad<="20100226" OR @rlad<="20100226" OR @pd<="20100226")	(US-PGPUB; USPAT)	OR	ON	ON	2022/04/06 11:49 AM
L819	100378	(G08B13/1427 OR G08B21/0244 OR G08B21/0247 OR G08B21/0269 OR G08B21/0272 OR G08B21/0277 OR G08B25/016 OR H04W4/02 OR H04W4/024 OR H04W4/029 OR H04W4/20 OR H04W4/80 OR H04W64/00).cpc.	(US-PGPUB; USPAT; USOCR)	OR	ON	ON	2022/04/06 11:50 AM
L820	1649	((distance OR position OR location OR geographic) SAME (UWB OR wideband OR (wide adj2 band) OR wide?band) SAME (TOF OR (time adj2 flight) OR (round adj2 trip) OR round?trip?delay))	(US-PGPUB; USPAT)	OR	ON	ON	2022/04/06 11:50 AM
L821	2302	((UWB OR wideband OR (wide adj2 band) OR wide?band) SAME (TOF OR (time adj2 flight) OR (round adj2 trip) OR round?trip?delay))	(US-PGPUB; USPAT)	OR	ON	ON	2022/04/06 11:51 AM
L822	463	L819 AND 820	(US-PGPUB; USPAT; USOCR)	OR	ON	ON	2022/04/06 11:51 AM
L823	82	L822 AND (@ad<="20100226" OR @rlad<="20100226" OR @pd<="20100226")	(US-PGPUB; USPAT)	OR	ON	ON	2022/04/06 11:52 AM
L824	62	L387 AND (UWB OR wideband OR (wide adj2 band) OR wide?band OR 802.11$3 OR bluetooth$3 OR BLU OR zigbee OR Wimax)	(US-PGPUB; USPAT)	OR	ON	ON	2022/04/06 11:53 AM

PE2E SEARCH - Search History (Interference)

There are no Interference searches to show.

Real **time** motion capture **using** a single **time**-of-**flight** camera
V Ganapathi, C Plagemann, D Koller… - 2010 IEEE Computer …, 2010 - ieeexplore.ieee.org
… for tracking human pose **using** a stream of monocular depth images. The **key** idea is to …
Thus, we approach the human motion capture task **using time**-of-**flight** sensors. Despite the …
Save Cite Cited by 520 Related articles All 20 versions

Sensitivity study for object reconstruction **using** a network of **time**-of-**flight** depth sensors
G Xu, S Payandeh - 2015 IEEE International Conference on …, 2015 - ieeexplore.ieee.org
… For section III, the reconstruction of the human hand from a pair of depth sensors is presented
followed by the discussions highlighting the **key** findings of this study and some future …
Save Cite Cited by 7 Related articles All 2 versions

Automatic feature point detection and tracking of human actions in **time**-of-**flight** videos
X Yuan, L Kong, D Feng, Z Wei - IEEE/CAA Journal of …, 2017 - ieeexplore.ieee.org
… A **key** step to **track** and … of **using** a model but demand accurate detection of feature points
[3]. In this article, we propose a model-free method for **detect**ing feature points from **time**-of-**flight** …
Save Cite Cited by 37 Related articles All 3 versions

A Solution for Crime Scene Reconstruction **using Time**-of-**Flight** Cameras
S Giancola, D Piron, P Poppa, R Sala - arXiv preprint arXiv:1708.02033, 2017 - arxiv.org
… Even if the representation looks good, the right part of the reconstruction is **missing** due to
a **track lost** during the reconstruction. Losing **track** occurs when the **key**points density drops. …
Save Cite Cited by 2 Related articles All 4 versions

Robust Multiview 3D Pose Estimation **using Time** of **Flight** Cameras
M Hassan, J Eberhardt, S Malorodov … - IEEE Sensors …, 2021 - ieeexplore.ieee.org
… **key** point detector from multiple view ports and forward project them to calculate the 3D joint
position. If a keypoint is **missing** … We also compare our technique with different 3D **key** point …
Save Cite Related articles

Untargeted metabolomics analysis of *Mucor racemosus* Douchi fermentation process by gas chromatography **with time**-of-**flight** mass spectrometry
P Li, H Tang, C Shi, Y Xie, H Zhou, B Xia… - Food Science & …, 2019 - Wiley Online Library
… **using** gas chromatography with **time**-of-**flight** mass spectrometry. A total of 511 peaks were
found… by both methods were **found** among different fermentation **time** within 15 days, while the …
Save Cite Cited by 10 Related articles All 6 versions

Multitouch Pressure Sensing **with** Soft Optical **Time**-of-**Flight** Sensors
JT Lin, C Newquist, CK Harnett - IEEE Transactions on …, 2022 - ieeexplore.ieee.org
… During a tracking run, the three **key** histogram intensities were **used** to **find** the best match
in the training data, and the matching (x,y) value was reported as the object's centroid. To …
Save Cite Related articles

… global chemical constituents of Ziziphi Spinosae Semen by **using** UHPLC **with** quadrupole **time**-of-**flight** mass spectrometry combined **with** multiple data-processing …
X Zhu, X Liu, K Pei, Y Duan, H Zhu, J Ma… - Journal of …, 2018 - Wiley Online Library
… Moreover, the UHPLC–TOF-MS technique with multiple data analysis strategy as a semi-quantitative
analysis mode was **used** to **find** the **key** markers between crude and parched ZSS, …
Save Cite Cited by 9 Related articles All 5 versions

FiehnLib: mass spectral and retention index libraries for metabolomics based on quadrupole and **time**-of-**flight** gas chromatography/mass spectrometry

T Kind, G Wohlgemuth, DY Lee, Y Lu… - Analytical …, 2009 - ACS Publications

… batch downloaded and the use of InChI structure hash **keys** (InChIKey) for comparisons. The … In addition, all FiehnLib metabolite InChI **keys** are already indexed by Google through the …

Save Cite Cited by 1110 Related articles All 14 versions

Robust head pose estimation by fusing **time**-of-**flight** depth and color

A Bleiweiss, M Werman - 2010 IEEE International Workshop on …, 2010 - ieeexplore.ieee.org

… The **key** to our method is a model-based approach based on the fusion of color and **time**-of-**flight** depth data. Our method has several advantages over existing head-pose estimation …

Save Cite Cited by 21 Related articles All 7 versions

Certification under 37 C.F.R. §1.8

Date of Mailing or Transmission: April 22, 2022

I hereby certify that I have caused the document indicated herein on the date indicated above to be transmitted via the Office electronic filing system in accordance with 37 C.F.R. §1.6(a)(4).

BY: /Debbie Watson/ (Signature) **Name:** Debbie Watson (Typed Name)

IN THE UNITED STATES PATENT AND TRADEMARK OFFICE

1st Named Inventor:	John W. Howard	**Examiner:**	TAYLOR, BARRY W
Application No.:	17/578,676	**Art Unit:**	2646
Filing Date:	19 Jan 2022	**Docket No.:**	BIKN005C9
Confirmation No.:	1996		
Title:	WIRELESS DEVICE AND METHODS FOR USE THEREWITH		

COMMENT ON STATEMENT OF REASONS FOR ALLOWANCE

Date: April 22, 2022

United States Patent and Trademark Office
P. O. Box 1450
Alexandria, VA 22313-1450

Applicant recognizes that in accordance with M.P.E.P. § 1302.14, the Examiner's reasons for allowance need not set forth all of the details as to why the claims are allowed. Applicant does not concede that the Examiner's stated reasons for allowance, if any, are the only grounds for patent subject matter eligibility or patentability of the allowed claims or that any element excluded from the Examiner's Reasons for Allowance is taught or suggested by the art of record. Further, Applicant does not concede that all of the elements identified by the Examiner are necessary to distinguish the prior art of record or to satisfy the requirements of 35 U.S.C. § 112. In addition, the Examiner does not assert, and Applicant would not concede, that the Examiner's reasons have any bearing on the patent subject matter eligibility or patentability of claims in any other applications directed to the disclosed subject matter.

Each dependent claim stands on its own and is allowable on its own merits. In particular, each dependent claim may be allowable on the basis of a combination of some of the features recited in the dependent claim and its base claim(s), which combination of features may not include all of the elements identified in the Examiner's reasons for allowance.

No additional fees are believed to be due. In the event that additional fees are due or a credit for an overpayment is due, the Commissioner is hereby authorized to charge any additional fees or credit any overpayment to Deposit Account No. 50-2126.

RESPECTFULLY SUBMITTED,

By: /Bruce Stuckman, Ph.D./Reg. No. 36693
Bruce E. Stuckman

Garlick & Markison
100 Congress Avenue, Suite 2000
Austin, TX 78701
Phone: 512-487-7241
E-mail: bstuckman@texaspatents.com

Electronic Acknowledgement Receipt

EFS ID:	45538739
Application Number:	17578676
International Application Number:	
Confirmation Number:	1996
Title of Invention:	WIRELESS DEVICE AND METHODS FOR USE THEREWITH
First Named Inventor/Applicant Name:	John W. Howard
Customer Number:	34399
Filer:	Bruce Edward Stuckman/Debbie Watson
Filer Authorized By:	Bruce Edward Stuckman
Attorney Docket Number:	BIKN005C9
Receipt Date:	22-APR-2022
Filing Date:	19-JAN-2022
Time Stamp:	13:25:47
Application Type:	Utility under 35 USC 111(a)

Payment information:

Submitted with Payment	no

File Listing:

Document Number	Document Description	File Name	File Size(Bytes)/ Message Digest	Multi Part /.zip	Pages (if appl.)
1	Post Allowance Communication - Incoming	BIKN005C9_STMTAllow.pdf	109667 b5cb336fceda5b65df489ce49ad28d86f1eaae75	no	2

Warnings:

Information:	
Total Files Size (in bytes):	109667

This Acknowledgement Receipt evidences receipt on the noted date by the USPTO of the indicated documents, characterized by the applicant, and including page counts, where applicable. It serves as evidence of receipt similar to a Post Card, as described in MPEP 503.

New Applications Under 35 U.S.C. 111
If a new application is being filed and the application includes the necessary components for a filing date (see 37 CFR 1.53(b)-(d) and MPEP 506), a Filing Receipt (37 CFR 1.54) will be issued in due course and the date shown on this Acknowledgement Receipt will establish the filing date of the application.
National Stage of an International Application under 35 U.S.C. 371
If a timely submission to enter the national stage of an international application is compliant with the conditions of 35 U.S.C. 371 and other applicable requirements a Form PCT/DO/EO/903 indicating acceptance of the application as a national stage submission under 35 U.S.C. 371 will be issued in addition to the Filing Receipt, in due course.
New International Application Filed with the USPTO as a Receiving Office
If a new international application is being filed and the international application includes the necessary components for an international filing date (see PCT Article 11 and MPEP 1810), a Notification of the International Application Number and of the International Filing Date (Form PCT/RO/105) will be issued in due course, subject to prescriptions concerning national security, and the date shown on this Acknowledgement Receipt will establish the international filing date of the application.

Document Description: Issue Fee Payment (PTO-85B)

Issue Fee Transmittal Form

Application Number	Filing Date	First Named Inventor	Atty. Docket No.	Confirmation No.
17578676	19-Jan-2022	John W. Howard	BIKN005C9	1996

TITLE OF INVENTION :

WIRELESS DEVICE AND METHODS FOR USE THEREWITH

Entity Status	Application Type	Art Unit	Class - Subclass	EXAMINER
Small	Utility under 35 USC 111(a)	2646	457000	

Issue Fee Due	Publication Due	Total Fee(s) Due	Date Due	Prev. Paid Fee
$600	$0	$600	14-Jul-2022	$0

1.Change of Correspondence Address and/or Indication Of Fee Address (37 CFR 1.33 & 1.363)

Current Correspondence Address:	Current Indicated Fee Address :
34399 GARLICK & MARKISON 100 CONGRESS AVENUE SUITE 2000 AUSTIN TX 78701 UNITED STATES 2149382452 MMurdock@TEXASPATENTS.COM	
☐ Change of correspondence address requested, system generated AIA/122-EFS form attached	☐ Fee Address indication requested, system generated SB/47-EFS form attached

2.Entity Status

Change in Entity Status

○ Applicant certifying micro entity status; system generated Micro Entity certification form attached. See 37 CFR 1.29.
Note: Absent a valid certification of micro entity status, issue fee payment in the micro entity amount will not be accepted at the risk of application abandonment. If this box is checked, you will be prompted to choose a micro entity status on the gross income basis (37 CFR 1.29(a)) or the institution of higher education basis (37 CFR 1.29(d)), and make the applicable certification online.

◉ Applicant asserting small entity status. See 37 CFR 1.27.
Note: If the application was previously under micro entity status, checking this box will be taken to be a notification of loss of entitlement to micro entity status.

○ Applicant changing to regular undiscounted fee status.
Note: Checking this box will be taken to be a notification of loss of entitlement to small or micro entity status, as applicable.

Document Description: Issue Fee Payment (PTO-85B)

3.The Following Fee(s) Are Submitted:

☒ Issue Fee	☐ I authorize USPTO to apply my previously paid issue fee to the current fees due
☐ Publication Fee	☐ The Director is hereby authorized to apply my previously paid issue fee to the current fee due and to charge deficient fees to Deposit Account Number _____
☐ Advance Order - # of copies _____	☒ If **in addition to** the payment of the issue fee amount submitted with this form, there are any discrepancies in any amount(s) due, the Director is authorized to charge any deficiency or credit any overpayment, to Deposit Account Number 50-2126 . The **issue fee must be submitted** with this form. **If payment of the issue fee does not accompany this form, checking this box and providing a deposit account number will NOT be effective to satisfy full payment of the fee(s) due.**

4.Firm and/or Attorney Names To Be Printed

NOTE: If no name is listed, no name will be printed
For printing on the patent front page, list to be displayed as entered

1. GARLICK & MARKISON
2. Bruce E. Stuckman, Ph.D.
3.

5.Assignee Name(s) and Residence Data To Be Printed

PLEASE NOTE: Unless an assignee is identified below, no assignee data will appear on the patent. If an assignee is identified below, the document has been filed for recordation as set forth in 37 CFR 3.11. Completion of this form is NOT a substitute for filing an assignment.

Name	City	State	Country	Category
THL Holding Company, LLC	Austin	TEXAS	UNITED STATES	corporation

6.Signature

I certify, in accordance with 37 CFR 1.4(d)(4) that I am an attorney or agent registered to practice before the Patent and Trademark Office who has filed and has been granted power of attorney in this application. I also certify that this Fee(s) Transmittal form is being transmitted to the USPTO via EFS-WEB on the date indicated below.

Signature	/Bruce E. Stuckman, Ph.D./	**Date**	04-22-2022
Name	Bruce Edward Stuckman	**Registration Number**	36693

Electronic Patent Application Fee Transmittal

Application Number:	17578676
Filing Date:	19-Jan-2022
Title of Invention:	WIRELESS DEVICE AND METHODS FOR USE THEREWITH
First Named Inventor/Applicant Name:	John W. Howard
Filer:	Bruce Edward Stuckman/Debbie Watson
Attorney Docket Number:	BIKN005C9

Filed as Small Entity

Filing Fees for Utility under 35 USC 111(a)

Description	Fee Code	Quantity	Amount	Sub-Total in USD($)
Basic Filing:				
UTILITY APPL ISSUE FEE	2501	1	600	600
PUBL. FEE- EARLY, VOLUNTARY, OR NORMAL	1504	1	0	0
Pages:				
Claims:				
Miscellaneous-Filing:				
Petition:				
Patent-Appeals-and-Interference:				

Description	Fee Code	Quantity	Amount	Sub-Total in USD($)
Post-Allowance-and-Post-Issuance:				
Extension-of-Time:				
Miscellaneous:				
		Total in USD ($)		**600**

Electronic Acknowledgement Receipt	
EFS ID:	45538952
Application Number:	17578676
International Application Number:	
Confirmation Number:	1996
Title of Invention:	WIRELESS DEVICE AND METHODS FOR USE THEREWITH
First Named Inventor/Applicant Name:	John W. Howard
Customer Number:	34399
Filer:	Bruce Edward Stuckman/Debbie Watson
Filer Authorized By:	Bruce Edward Stuckman
Attorney Docket Number:	BIKN005C9
Receipt Date:	22-APR-2022
Filing Date:	19-JAN-2022
Time Stamp:	13:28:55
Application Type:	Utility under 35 USC 111(a)

Payment information:

Submitted with Payment	yes
Payment Type	CARD
Payment was successfully received in RAM	$600
RAM confirmation Number	E20224LD28514784
Deposit Account	502126
Authorized User	Debbie Watson
The Director of the USPTO is hereby authorized to charge indicated fees and credit any overpayment as follows: 37 CFR 1.20 (Post Issuance fees) 37 CFR 1.21 (Miscellaneous fees and charges)	

File Listing:

Document Number	Document Description	File Name	File Size(Bytes)/ Message Digest	Multi Part /.zip	Pages (if appl.)
1	Issue Fee Payment (PTO-85B)	Web85b.pdf	62856 a209648bf855acc79e3cbdc9cc6fb1d995237c4c	no	2
Warnings:					
Information:					
2	Fee Worksheet (SB06)	fee-info.pdf	40434 c5ecb092cea4a42d655f870bed8ba39818ba1fd4	no	2
Warnings:					
Information:					
		Total Files Size (in bytes):	103290		

This Acknowledgement Receipt evidences receipt on the noted date by the USPTO of the indicated documents, characterized by the applicant, and including page counts, where applicable. It serves as evidence of receipt similar to a Post Card, as described in MPEP 503.

New Applications Under 35 U.S.C. 111
If a new application is being filed and the application includes the necessary components for a filing date (see 37 CFR 1.53(b)-(d) and MPEP 506), a Filing Receipt (37 CFR 1.54) will be issued in due course and the date shown on this Acknowledgement Receipt will establish the filing date of the application.
National Stage of an International Application under 35 U.S.C. 371
If a timely submission to enter the national stage of an international application is compliant with the conditions of 35 U.S.C. 371 and other applicable requirements a Form PCT/DO/EO/903 indicating acceptance of the application as a national stage submission under 35 U.S.C. 371 will be issued in addition to the Filing Receipt, in due course.
New International Application Filed with the USPTO as a Receiving Office
If a new international application is being filed and the international application includes the necessary components for an international filing date (see PCT Article 11 and MPEP 1810), a Notification of the International Application Number and of the International Filing Date (Form PCT/RO/105) will be issued in due course, subject to prescriptions concerning national security, and the date shown on this Acknowledgement Receipt will establish the international filing date of the application.

UNITED STATES PATENT AND TRADEMARK OFFICE

UNITED STATES DEPARTMENT OF COMMERCE
United States Patent and Trademark Office
Address: COMMISSIONER FOR PATENTS
P.O. Box 1450
Alexandria, Virginia 22313-1450
www.uspto.gov

APPLICATION NUMBER	FILING OR 371(C) DATE	FIRST NAMED APPLICANT	ATTY. DOCKET NO./TITLE
17/578,676	01/19/2022	John W. Howard	BIKN005C9

CONFIRMATION NO. 1996

PUBLICATION NOTICE

OC000000133640911

34399
GARLICK & MARKISON
100 CONGRESS AVENUE
SUITE 2000
AUSTIN, TX 78701

Title:WIRELESS DEVICE AND METHODS FOR USE THEREWITH

Publication No.US-2022-0141624-A1
Publication Date:05/05/2022

NOTICE OF PUBLICATION OF APPLICATION

The above-identified application will be electronically published as a patent application publication pursuant to 37 CFR 1.211, et seq. The patent application publication number and publication date are set forth above.

The publication may be accessed through the USPTO's publically available Searchable Databases via the Internet at www.uspto.gov. The direct link to access the publication is currently http://www.uspto.gov/patft/.

The publication process established by the Office does not provide for mailing a copy of the publication to applicant. A copy of the publication may be obtained from the Office upon payment of the appropriate fee set forth in 37 CFR 1.19(a)(1). Orders for copies of patent application publications are handled by the USPTO's Public Records Division. The Public Records Division can be reached by telephone at (571) 272-3150 or (800) 972-6382, by facsimile at (571) 273-3250, by mail addressed to the United States Patent and Trademark Office, Public Records Division, Alexandria, VA 22313-1450 or via the Internet.

In addition, information on the status of the application, including the mailing date of Office actions and the dates of receipt of correspondence filed in the Office, may also be accessed via the Internet through the Patent Electronic Business Center at www.uspto.gov using the public side of the Patent Application Information and Retrieval (PAIR) system. The direct link to access this status information is currently https://portal.uspto.gov/pair/PublicPair. Prior to publication, such status information is confidential and may only be obtained by applicant using the private side of PAIR.

Further assistance in electronically accessing the publication, or about PAIR, is available by calling the Patent Electronic Business Center at 1-866-217-9197.

Office of Data Managment, Application Assistance Unit (571) 272-4000, or (571) 272-4200, or 1-888-786-0101

UNITED STATES PATENT AND TRADEMARK OFFICE

UNITED STATES DEPARTMENT OF COMMERCE
United States Patent and Trademark Office
Address: COMMISSIONER FOR PATENTS
P.O. Box 1450
Alexandria, Virginia 22313-1450
www.uspto.gov

APPLICATION NO.	ISSUE DATE	PATENT NO.	ATTORNEY DOCKET NO.	CONFIRMATION NO.
17/578,676	05/31/2022	11350246	BIKN005C9	1996

34399 7590 05/11/2022

GARLICK & MARKISON
100 CONGRESS AVENUE
SUITE 2000
AUSTIN, TX 78701

ISSUE NOTIFICATION

The projected patent number and issue date are specified above.

Determination of Patent Term Adjustment under 35 U.S.C. 154 (b)
(application filed on or after May 29, 2000)

The Patent Term Adjustment is 0 day(s). Any patent to issue from the above-identified application will include an indication of the adjustment on the front page.

If a Continued Prosecution Application (CPA) was filed in the above-identified application, the filing date that determines Patent Term Adjustment is the filing date of the most recent CPA.

Applicant will be able to obtain more detailed information by accessing the Patent Application Information Retrieval (PAIR) WEB site (http://pair.uspto.gov).

Any questions regarding the Patent Term Extension or Adjustment determination should be directed to the Office of Patent Legal Administration at (571)-272-7702. Questions relating to issue and publication fee payments should be directed to the Application Assistance Unit (AAU) of the Office of Patents Stakeholder Experience (OPSE), Stakeholder Support Division (SSD) at (571)-272-4200.

INVENTOR(s) (Please see PAIR WEB site http://pair.uspto.gov for additional inventors):

John W. Howard, Cedar Park, TX;
Richard Cutler, Round Rock, TX;
Robert M. Kennard, Dallas, TX;

APPLICANT(s) (Please see PAIR WEB site http://pair.uspto.gov for additional applicants):

THL Holding Company, LLC, Austin, TX;

The United States represents the largest, most dynamic marketplace in the world and is an unparalleled location for business investment, innovation, and commercialization of new technologies. The USA offers tremendous resources and advantages for those who invest and manufacture goods here. Through SelectUSA, our nation works to encourage and facilitate business investment. To learn more about why the USA is the best country in the world to develop technology, manufacture products, and grow your business, visit SelectUSA.gov.

IR103 (Rev. 10/09)