US008588806B2

(12) **United States Patent**
Howard et al.

(10) **Patent No.: US 8,588,806 B2**
(45) **Date of Patent: *Nov. 19, 2013**

(54) **WIRELESS DEVICE AND METHODS FOR USE IN A PAGING NETWORK**

(75) Inventors: **John W. Howard**, Cedar Park, TX (US); **Richard Cutler**, Leander, TX (US); **Robert M. Kennard**, Dallas, TX (US)

(73) Assignee: **THL Holding Company, LLC**, Round Rock, TX (US)

(*) Notice: Subject to any disclaimer, the term of this patent is extended or adjusted under 35 U.S.C. 154(b) by 848 days.

This patent is subject to a terminal disclaimer.

(21) Appl. No.: **12/713,346**

(22) Filed: **Feb. 26, 2010**

(65) **Prior Publication Data**

US 2011/0210849 A1 Sep. 1, 2011

(51) **Int. Cl.**
H04W 24/00 (2009.01)
H04M 11/04 (2006.01)

(52) **U.S. Cl.**
USPC **455/456.1**; 455/404.2

(58) **Field of Classification Search**
USPC 455/404.2, 41.2, 575.6, 404.1, 418, 455/419, 3.06, 30.01, 3.03, 426.1, 414.1, 455/414.4, 550.1, 422.1, 556.1, 556.2, 66.1, 455/466; 340/539.32, 925.69; 710/315; 725/114; 348/734
See application file for complete search history.

(56) **References Cited**

U.S. PATENT DOCUMENTS

4,476,469	A	10/1984	Lander	
5,146,231	A	9/1992	Ghaem et al.	
6,889,057	B2 *	5/2005	Tordera et al.	455/557
7,110,789	B1	9/2006	Curtiss et al.	
7,690,994	B2	4/2010	Dohta	
8,000,647	B2 *	8/2011	Hill	455/3.06
8,078,787	B2 *	12/2011	Lydon et al.	710/315
2005/0186968	A1	8/2005	Durst et al.	
2005/0231361	A1	10/2005	Godbey	
2006/0012488	A1 *	1/2006	Hilbrink et al.	340/825.69
2006/0152487	A1	7/2006	Grunnet-Jepsen	
2006/0152488	A1	7/2006	Salsman	
2006/0152489	A1	7/2006	Sweetser	
2006/0154642	A1 *	7/2006	Scannell, Jr.	455/404.1
2007/0013526	A1	1/2007	Kazdin et al.	
2007/0052177	A1	3/2007	Ikeda	
2007/0060228	A1	3/2007	Akasaka	

(Continued)

FOREIGN PATENT DOCUMENTS

WO	2006022645	A1	3/2006

OTHER PUBLICATIONS

International Preliminary Report on Patentability; PCT Application No. PCT/US11/24923; Feb. 10, 2012, 11 pages.

(Continued)

Primary Examiner — Melody Mehrpour
(74) *Attorney, Agent, or Firm* — Garlick & Markison; Bruce E. Stuckman

(57) **ABSTRACT**

A wireless device includes a user interface that generates a pairing signal in response to an indication from a user to pair the wireless device to at least one remote device and generates a first location request signal in response to a second indication from a user to locate the at least one remote device. A short-range wireless transceiver communicates RF signals to pair the wireless device to the at least one remote device and that transmits a first RF paging signal to the at least one remote device in response to the location request signal.

24 Claims, 22 Drawing Sheets

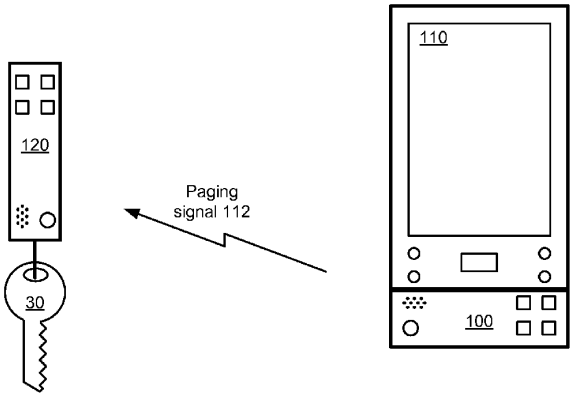

(56) **References Cited**

U.S. PATENT DOCUMENTS

2007/0060384	A1	3/2007	Dohta	
2007/0066394	A1	3/2007	Ikeda	
2008/0012824	A1	1/2008	Grunnet-Jepsen	
2008/0032713	A1	2/2008	Yang	
2008/0052750	A1	2/2008	Grunnet-Jepsen	
2008/0166968	A1 *	7/2008	Tang et al.	455/41.2
2008/0278445	A1	11/2008	Sweetser	
2009/0217335	A1 *	8/2009	Wong et al.	725/114
2009/0237209	A1	9/2009	Seal et al.	
2009/0284664	A1 *	11/2009	Barry et al.	348/734
2011/0210849	A1 *	9/2011	Howard et al.	340/539.32

OTHER PUBLICATIONS

International Search Report, Dated Apr. 19, 2011, Application No. PCT/US2011/024923, 11 Pages.

* cited by examiner

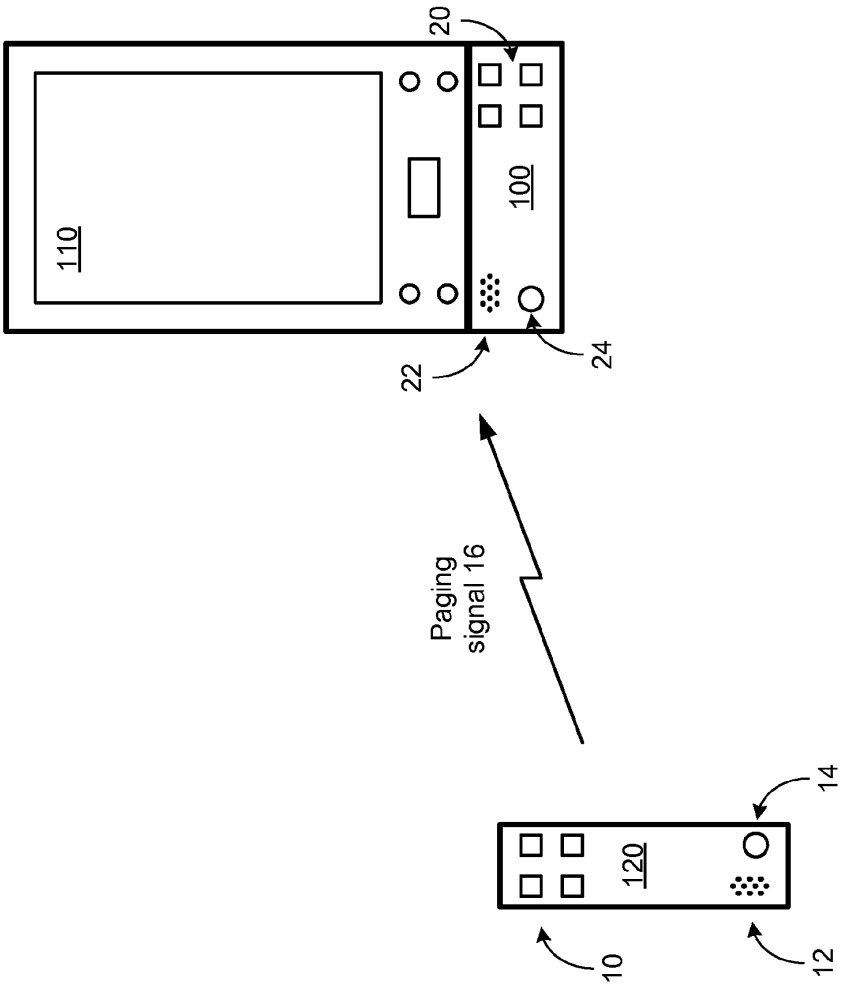

FIG. 1

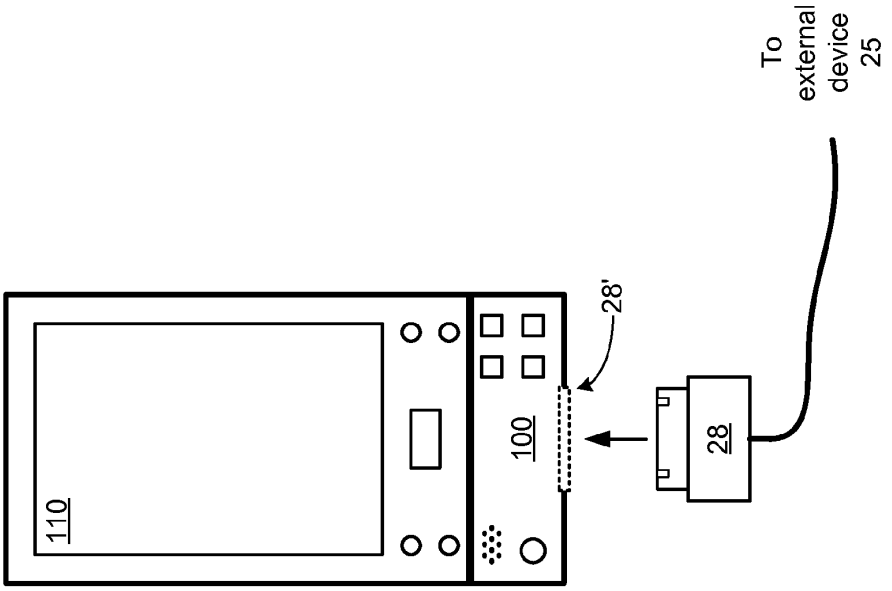

FIG. 3

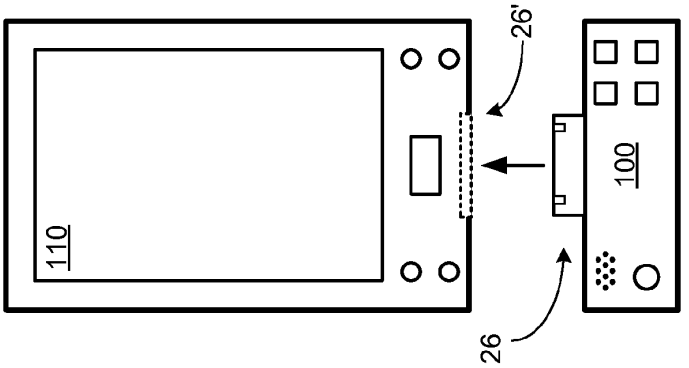

FIG. 2

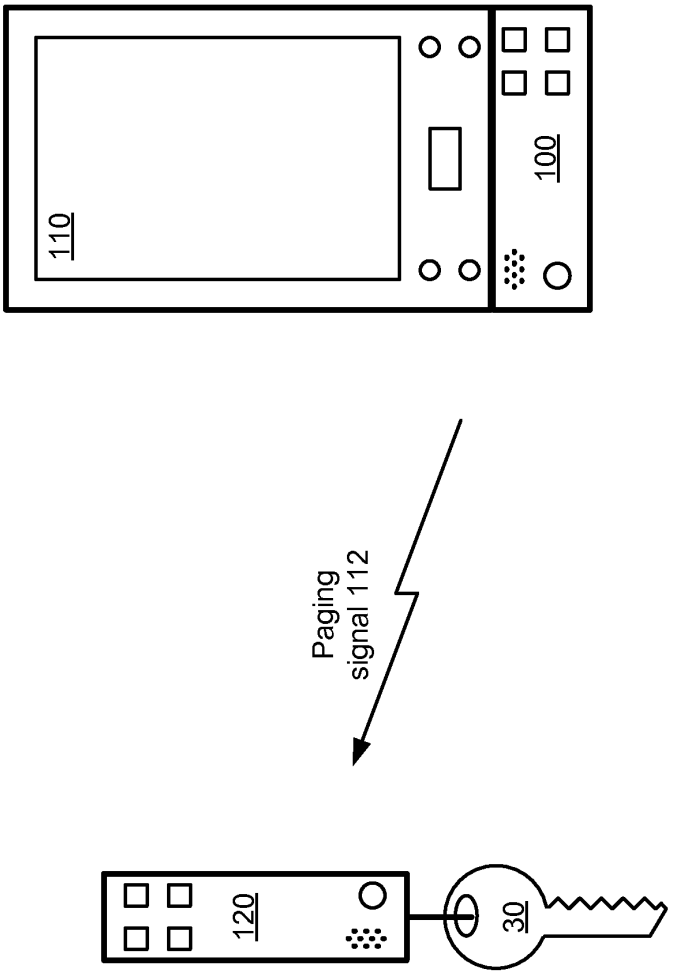

FIG. 4

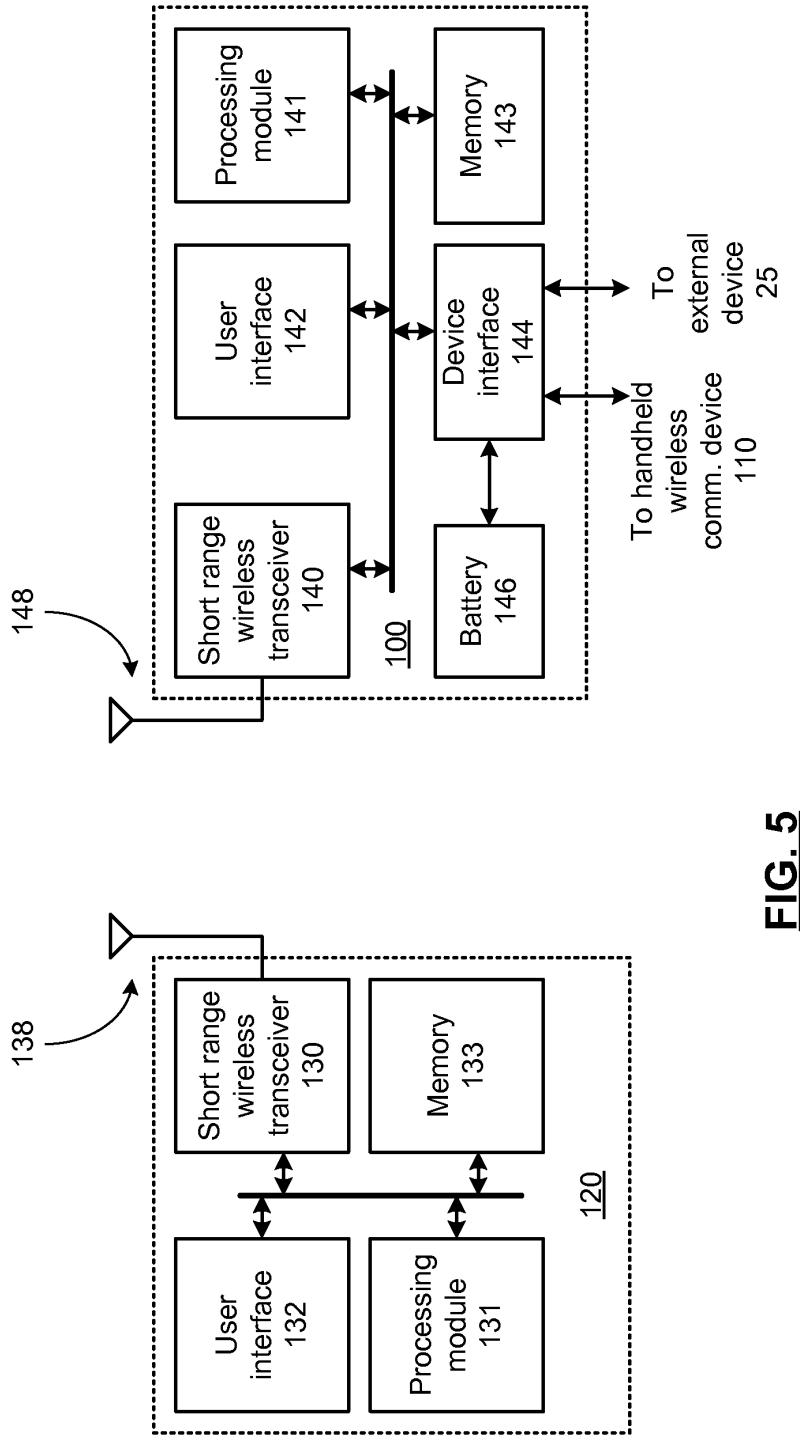
148
Short range wireless transceiver 140
User interface 142
Processing module 141
100
Battery 146
Device interface 144
Memory 143
To handheld wireless comm. device 110
To external device 25
138
Short range wireless transceiver 130
User interface 132
Processing module 131
Memory 133
120

FIG. 5

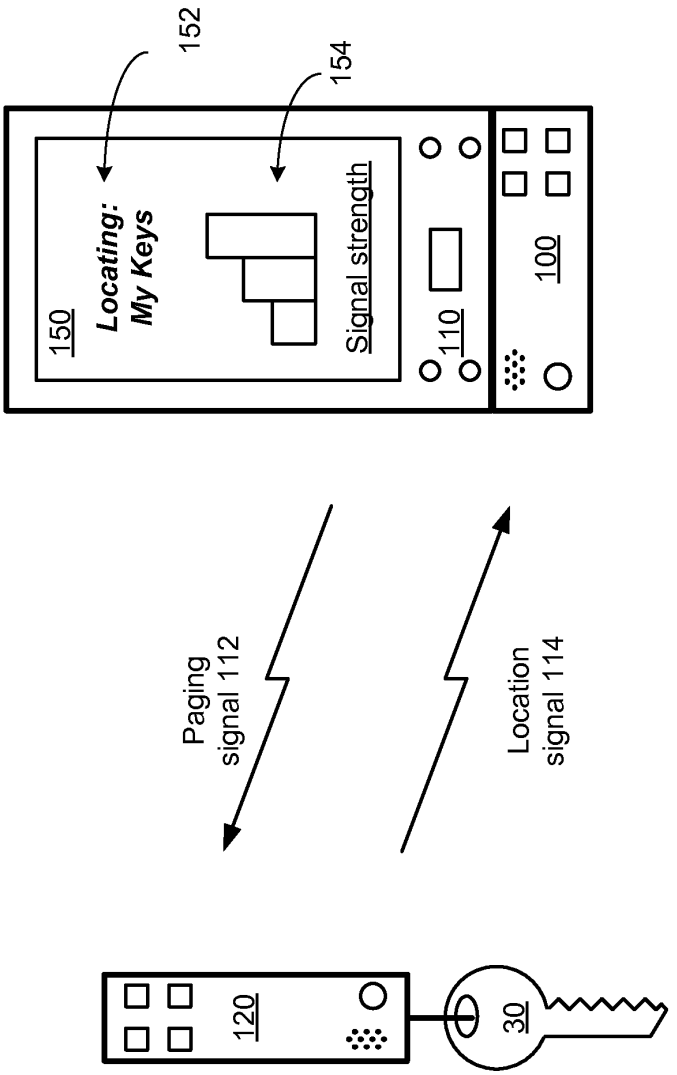
152
154
150
Locating:
My Keys
Signal strength
110
100
Paging
signal 112
Location
signal 114
120
30

FIG. 6

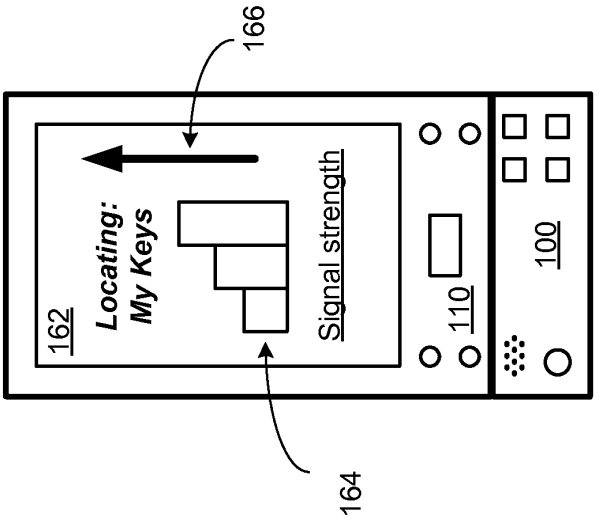

FIG. 8

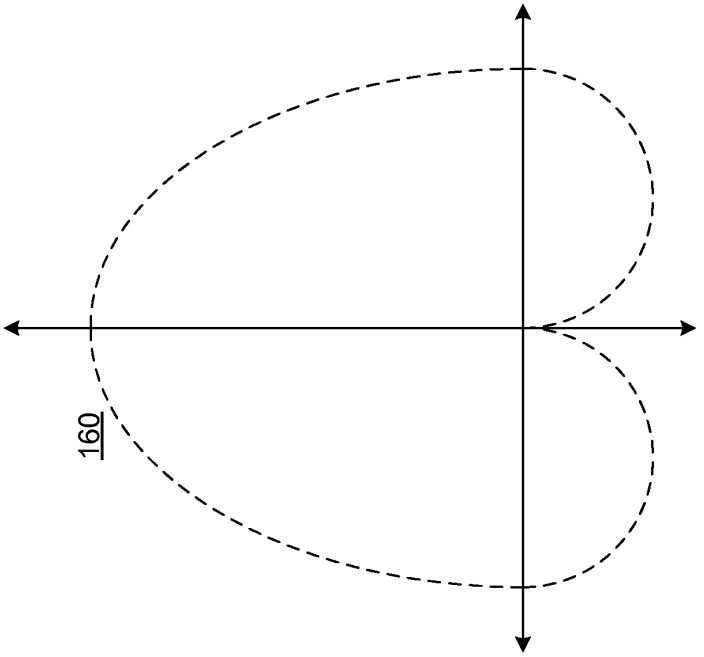

FIG. 7

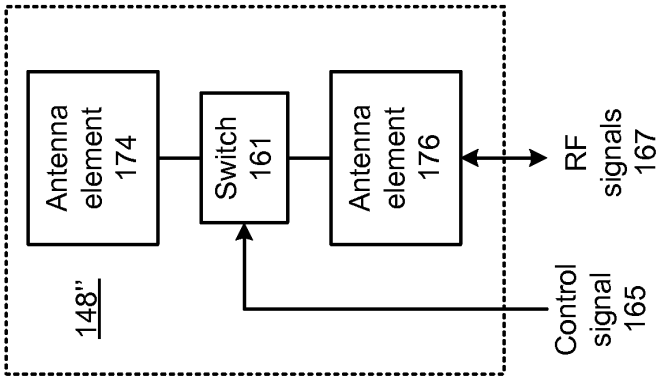

FIG. 11

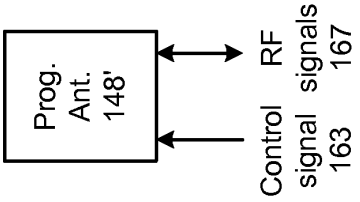

FIG. 10

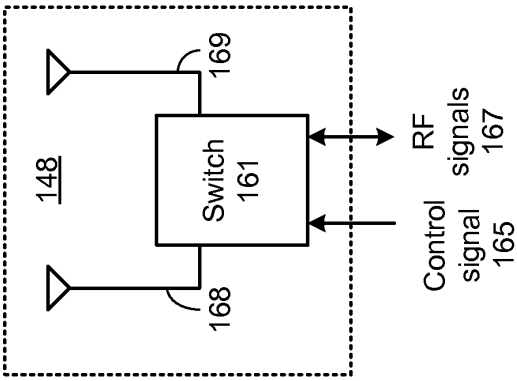

FIG. 9

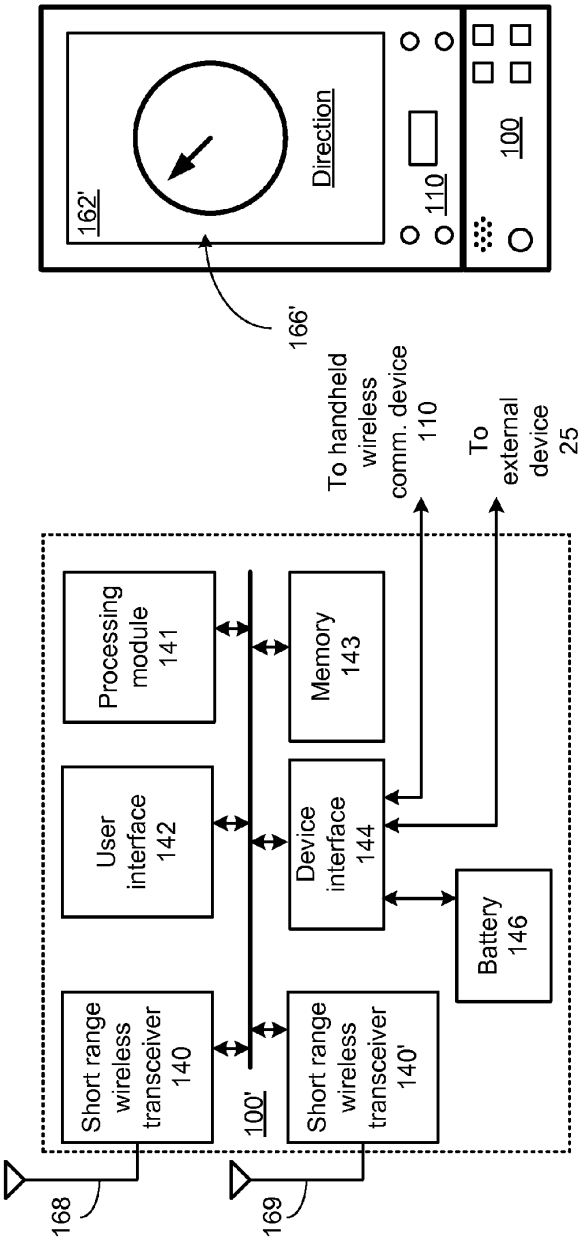

FIG. 13

FIG. 15

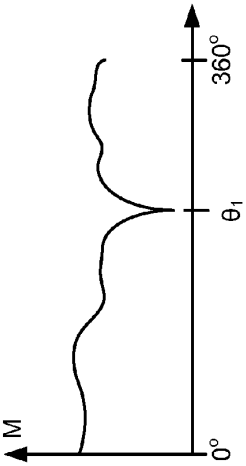

FIG. 12

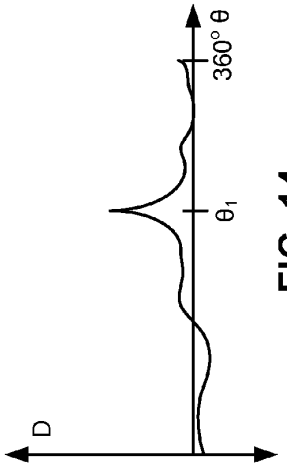

FIG. 14

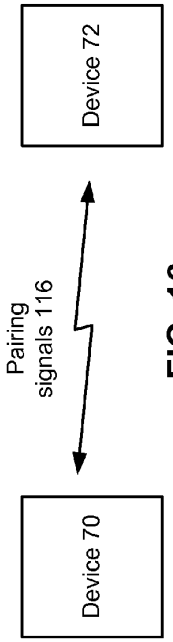
Device 70
Pairing signals 116
Device 72

FIG. 16

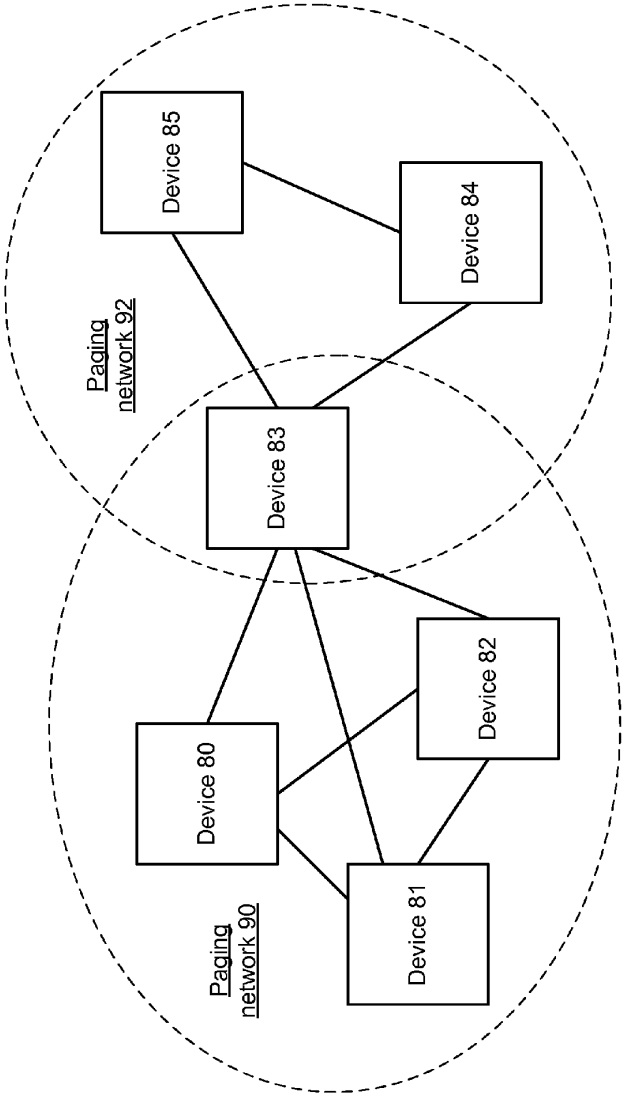
Paging network 92
Device 85
Device 84
Device 83
Paging network 90
Device 80
Device 81
Device 82

FIG. 17

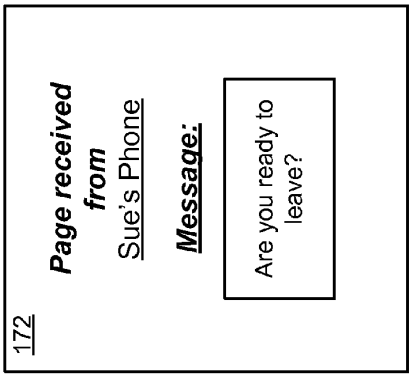
172
Page received from
Sue's Phone
Message:
Are you ready to leave?

FIG. 19

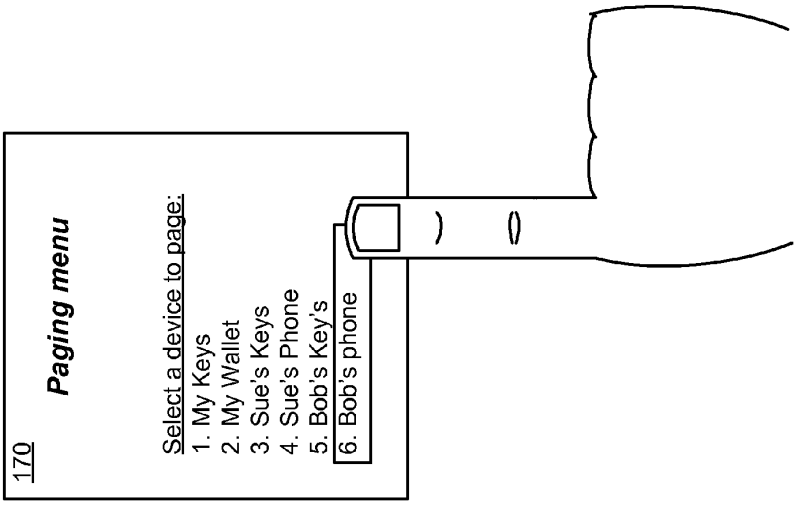
170
Paging menu
Select a device to page:
1. My Keys
2. My Wallet
3. Sue's Keys
4. Sue's Phone
5. Bob's Key's
6. Bob's phone

FIG. 18

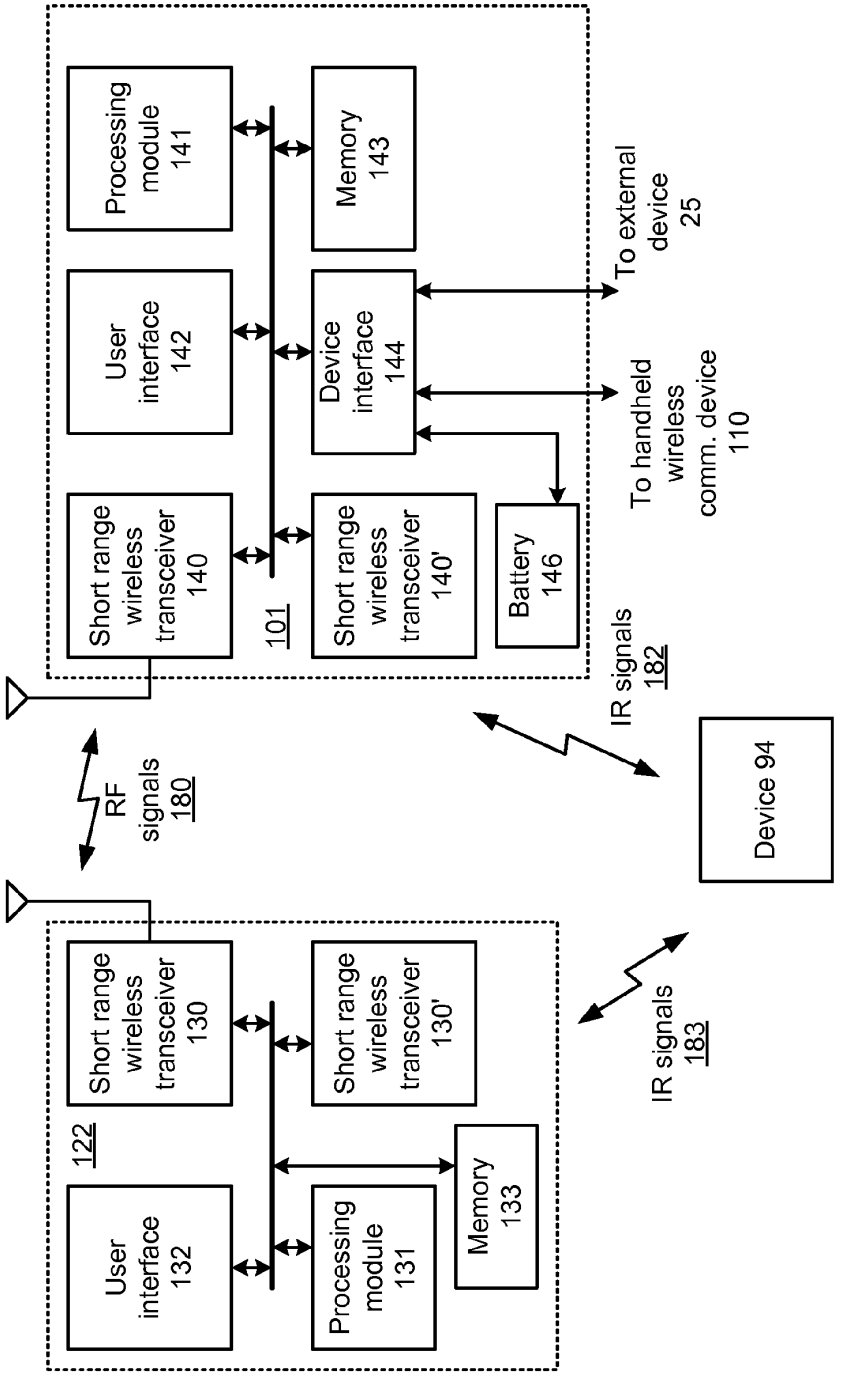
Processing module 141
User interface 142
Short range wireless transceiver 140
101
Memory 143
Device interface 144
Short range wireless transceiver 140'
Battery 146
To external device 25
To handheld wireless comm. device 110
IR signals 182
RF signals 180
Device 94
IR signals 183
122
User interface 132
Short range wireless transceiver 130
Processing module 131
Memory 133
Short range wireless transceiver 130'

FIG. 20

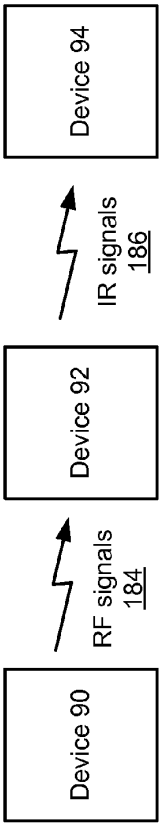

FIG. 21

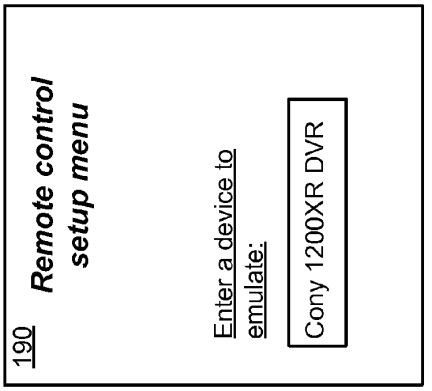

FIG. 22

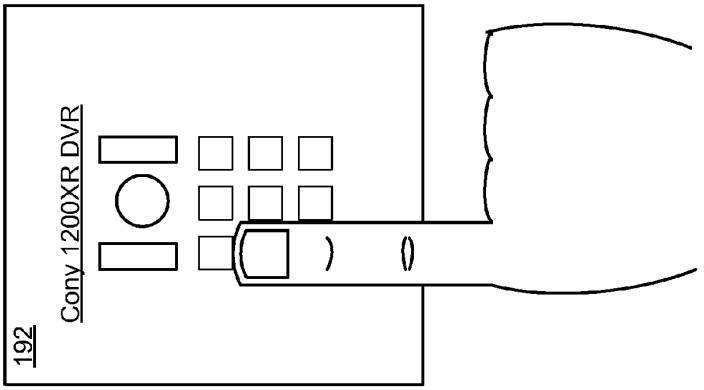

FIG. 23

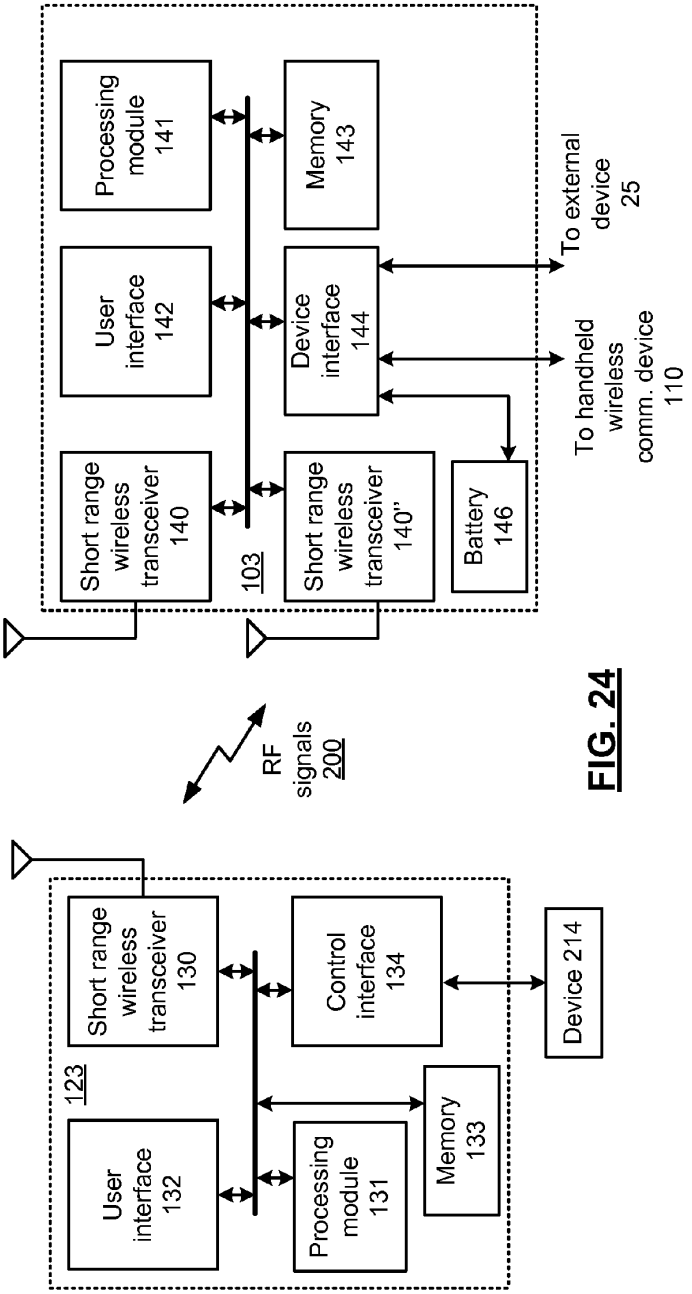
Short range wireless transceiver 140
User interface 142
Processing module 141
103
Short range wireless transceiver 140"
Device interface 144
Memory 143
Battery 146
To handheld wireless comm. device 110
To external device 25
RF signals 200
123
Short range wireless transceiver 130
User interface 132
Processing module 131
Memory 133
Control interface 134
Device 214

FIG. 24

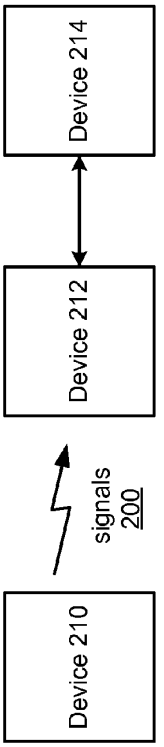
Device 210
signals 200
Device 212
Device 214

FIG. 25

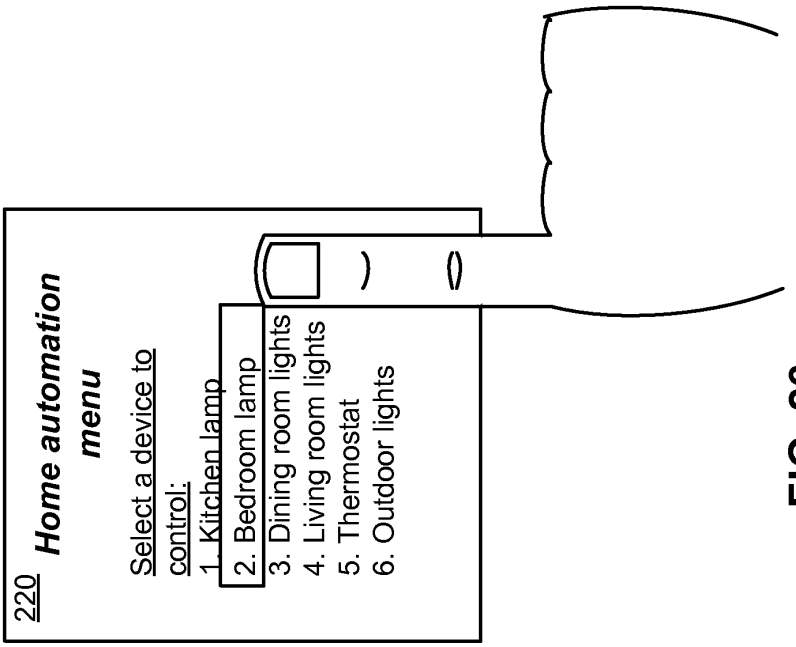
220
Home automation menu
Select a device to control:
1. Kitchen lamp
2. Bedroom lamp
3. Dining room lights
4. Living room lights
5. Thermostat
6. Outdoor lights

FIG. 26

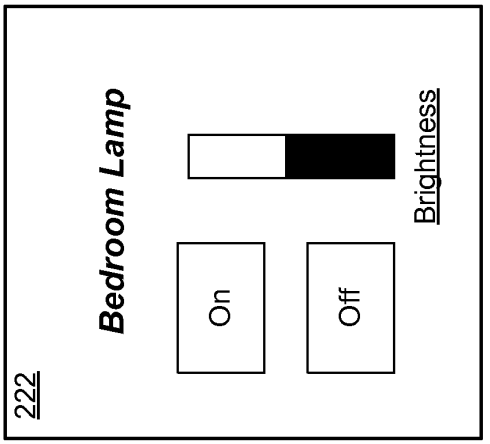
222
Bedroom Lamp
On
Off
Brightness

FIG. 27

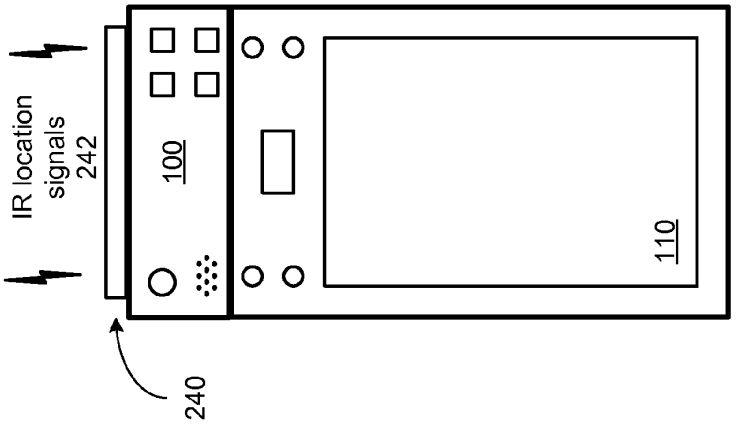
IR location signals 242
100
110
240

FIG. 29

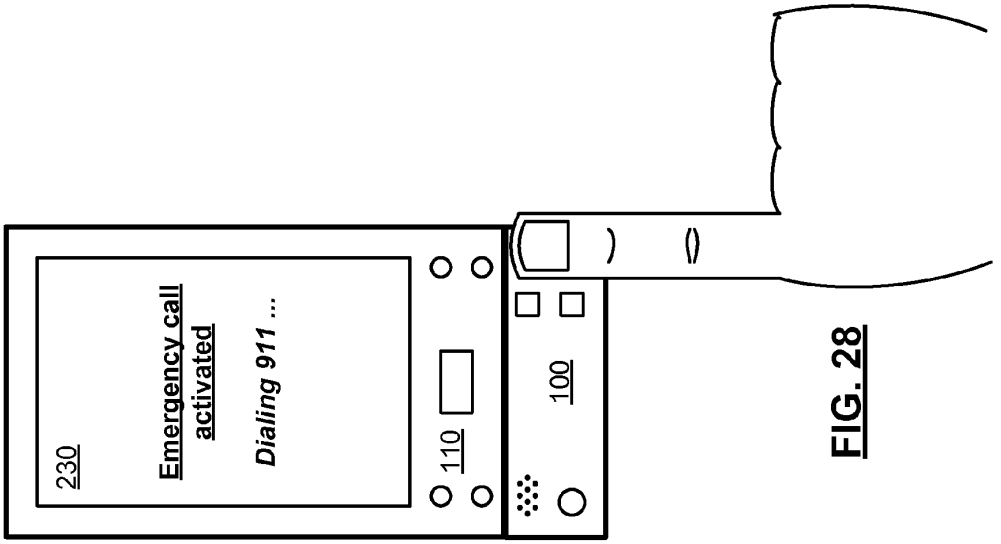
230
Emergency call activated
Dialing 911 ...
110
100

FIG. 28

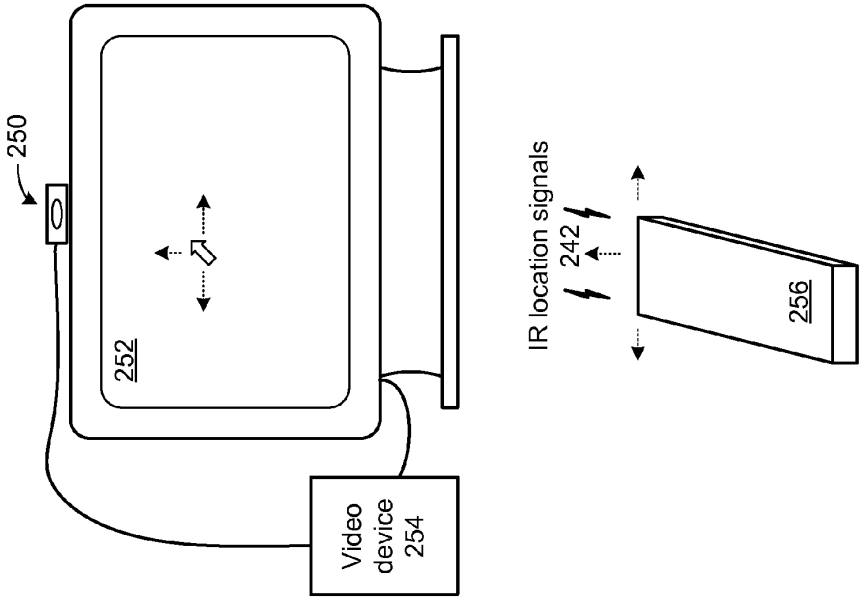
250
252
Video device 254
IR location signals
242
256

FIG. 30

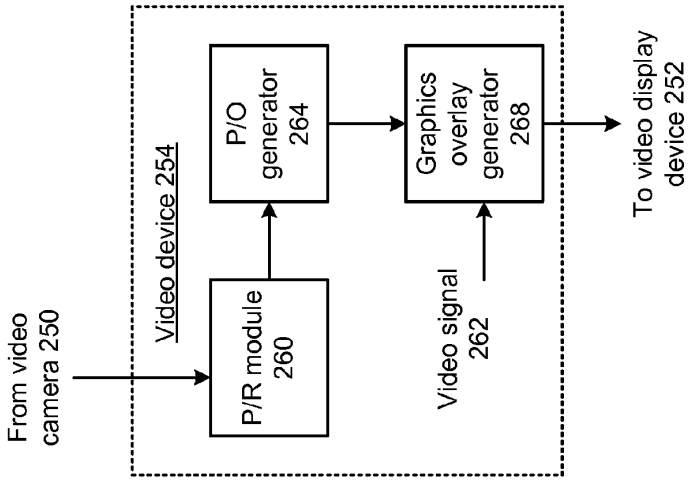
From video camera 250
Video device 254
P/R module 260
P/O generator 264
Video signal 262
Graphics overlay generator 268
To video display device 252

FIG. 31

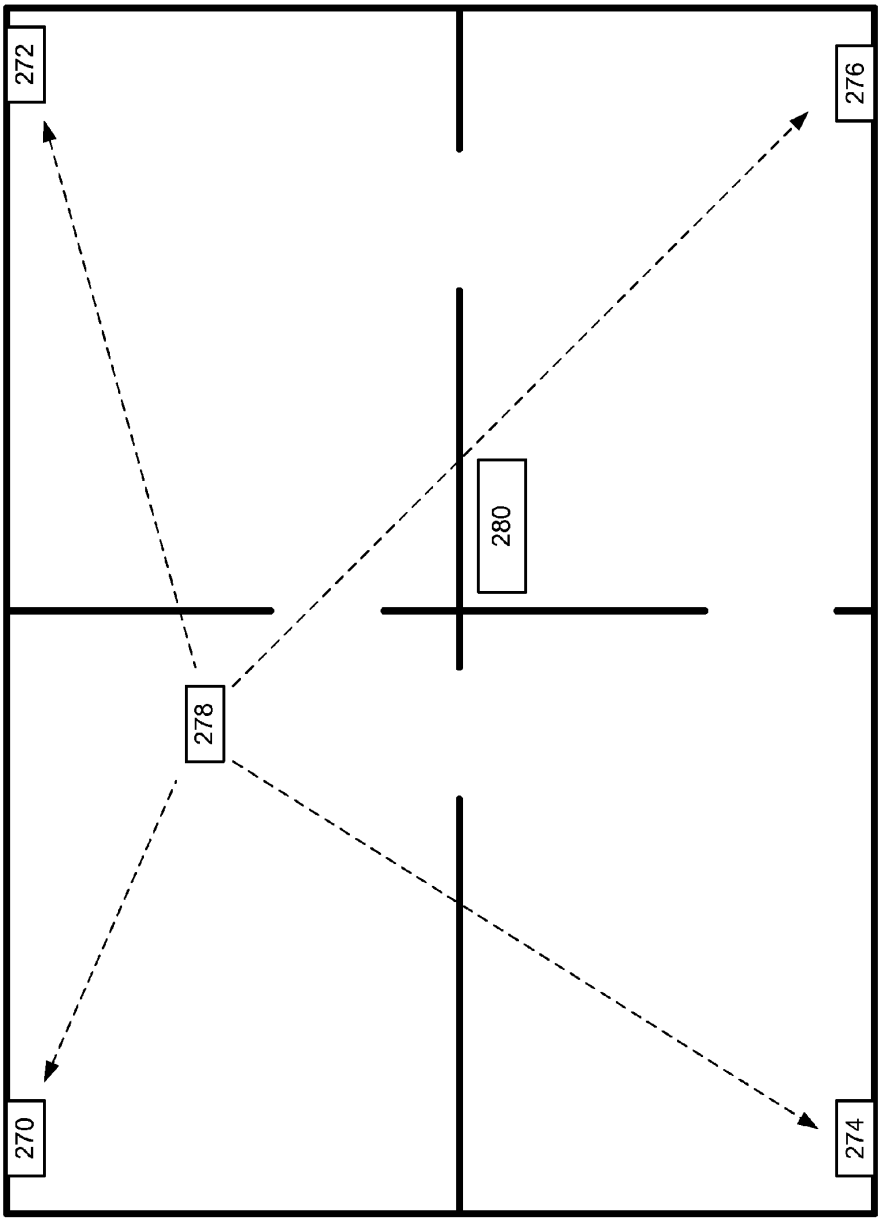

FIG. 32

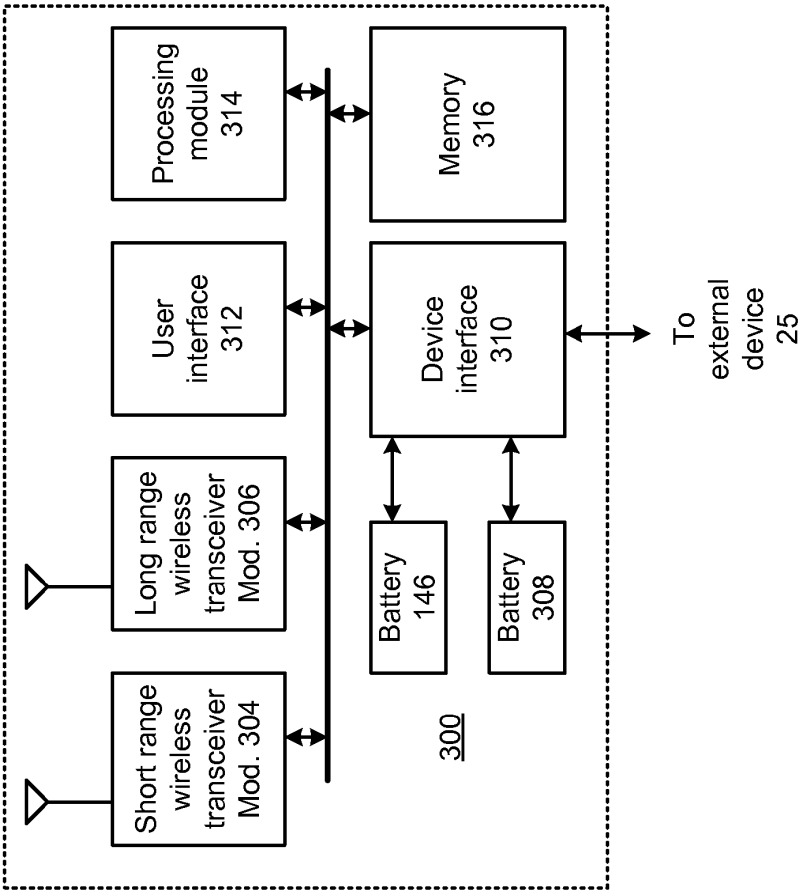
Short range wireless transceiver Mod. 304
Long range wireless transceiver Mod. 306
User interface 312
Processing module 314
Battery 146
Battery 308
Device interface 310
Memory 316
300
To external device 25

FIG. 33

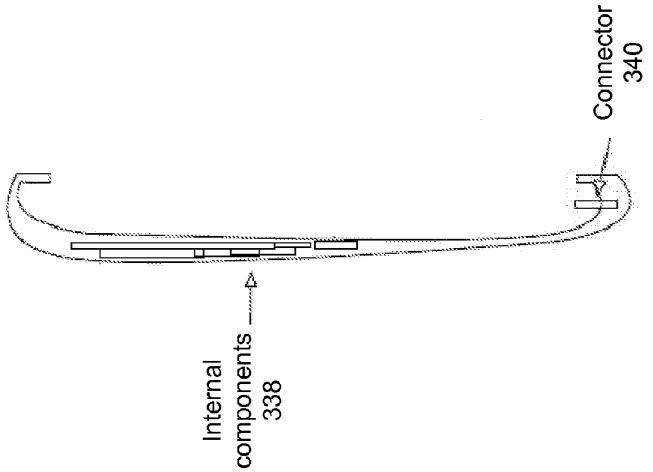
Internal components 338
Connector 340

FIG. 35

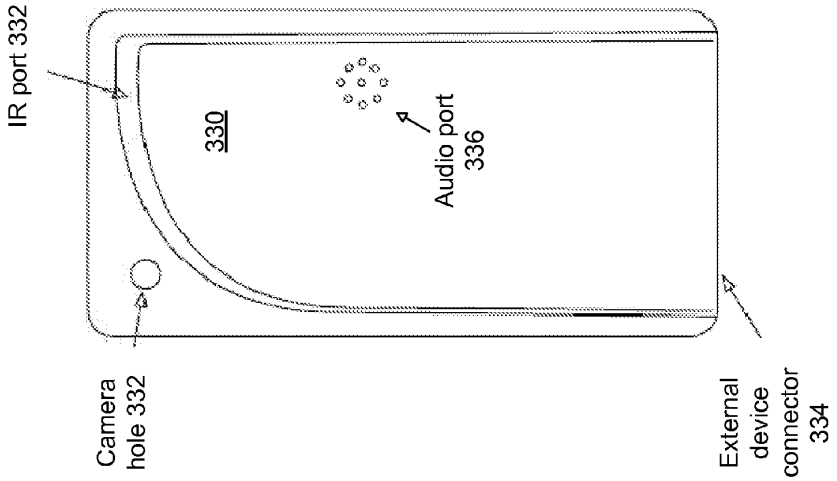
IR port 332
330
Audio port 336
Camera hole 332
External device connector 334

FIG. 34

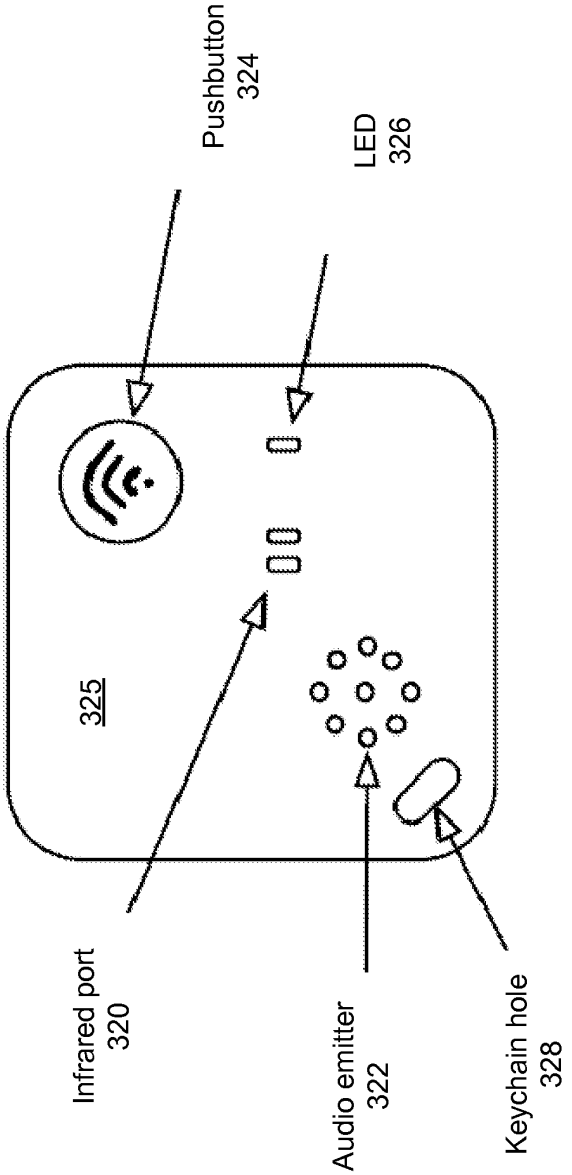
Pushbutton
324
LED
326
325
Infrared port
320
Audio emitter
322
Keychain hole
328

FIG. 36

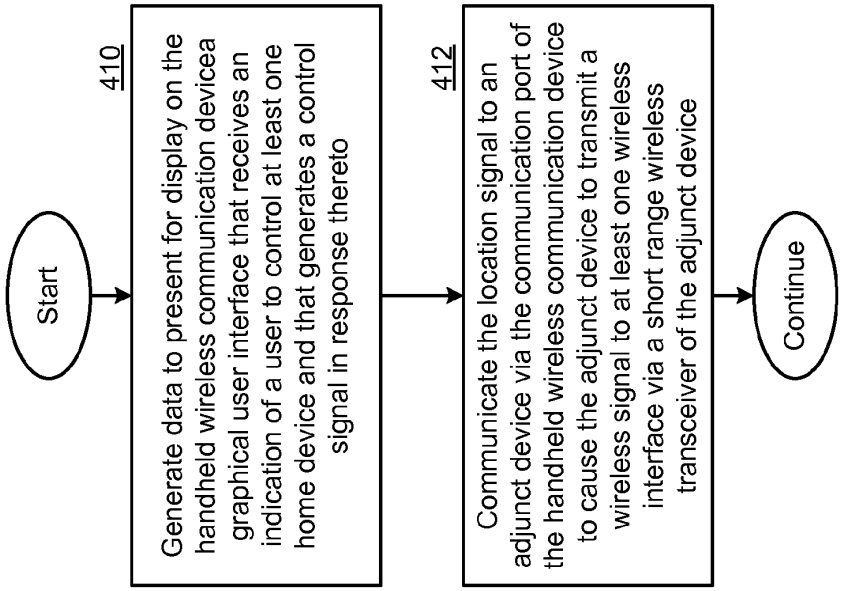
Start
410
Generate data to present for display on the handheld wireless communication devicea graphical user interface that receives an indication of a user to control at least one home device and that generates a control signal in response thereto
412
Communicate the location signal to an adjunct device via the communication port of the handheld wireless communication device to cause the adjunct device to transmit a wireless signal to at least one wireless interface via a short range wireless transceiver of the adjunct device
Continue

FIG. 38

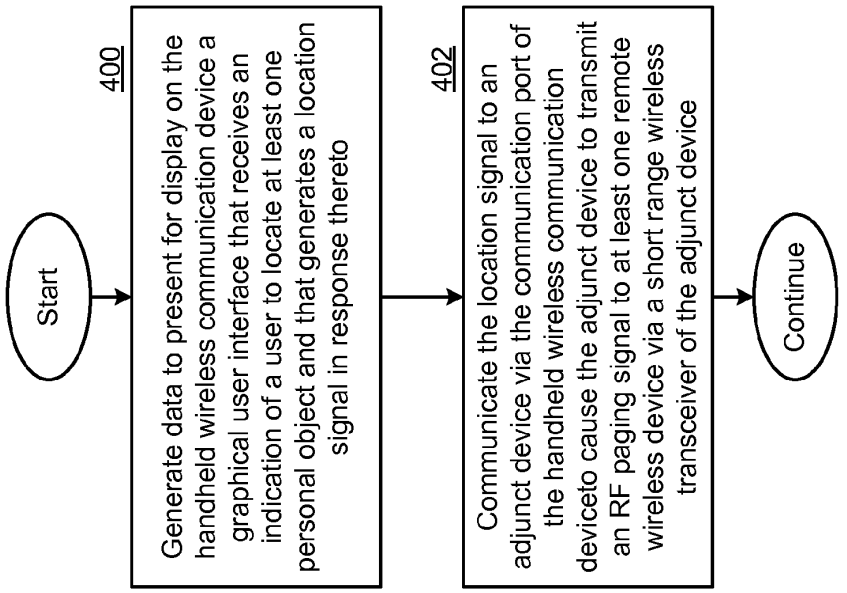
Start
400
Generate data to present for display on the handheld wireless communication device a graphical user interface that receives an indication of a user to locate at least one personal object and that generates a location signal in response thereto
402
Communicate the location signal to an adjunct device via the communication port of the handheld wireless communication deviceto cause the adjunct device to transmit an RF paging signal to at least one remote wireless device via a short range wireless transceiver of the adjunct device
Continue

FIG. 37

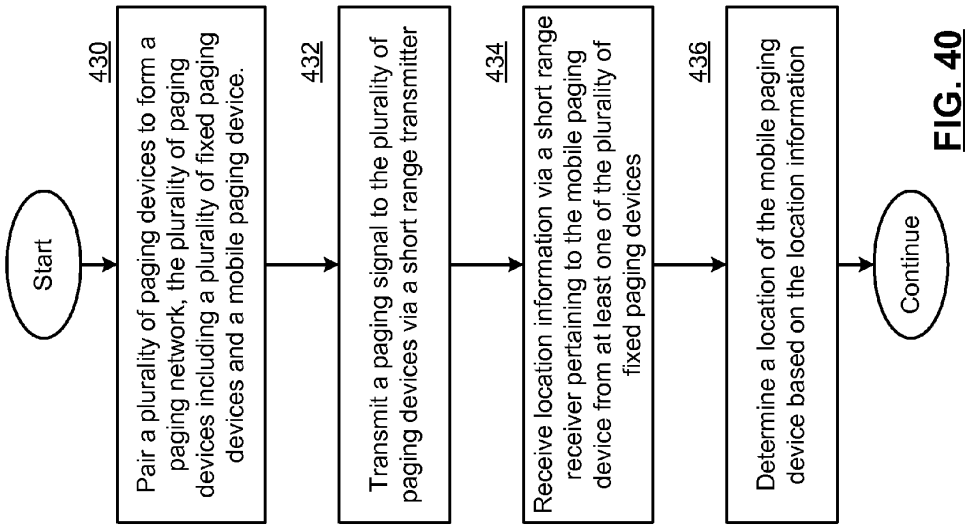
Start
430
Pair a plurality of paging devices to form a paging network, the plurality of paging devices including a plurality of fixed paging devices and a mobile paging device.
432
Transmit a paging signal to the plurality of paging devices via a short range transmitter
434
Receive location information via a short range receiver pertaining to the mobile paging device from at least one of the plurality of fixed paging devices
436
Determine a location of the mobile paging device based on the location information
Continue

FIG. 40

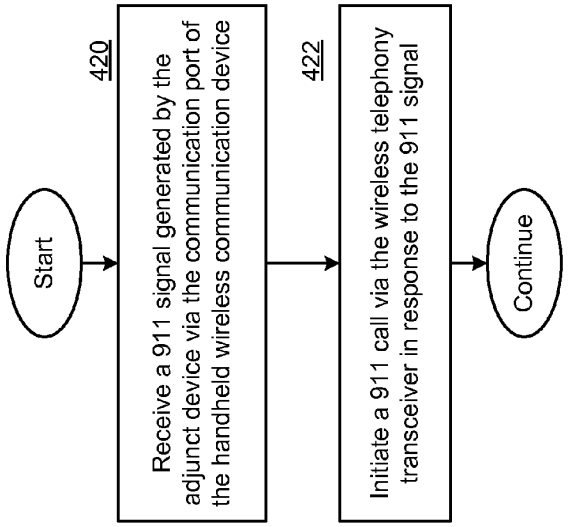
Start
420
Receive a 911 signal generated by the adjunct device via the communication port of the handheld wireless communication device
422
Initiate a 911 call via the wireless telephony transceiver in response to the 911 signal
Continue

FIG. 39

WIRELESS DEVICE AND METHODS FOR USE IN A PAGING NETWORK

CROSS REFERENCE TO RELATED APPLICATIONS

The present application is related to the following U.S. patent applications that are commonly assigned:

SYSTEM AND WIRELESS DEVICE FOR LOCATING A REMOTE OBJECT, having Ser. No. 12/713,316 filed on Feb. 26, 2010;

ADJUNCT DEVICE AND A HANDHELD WIRELESS COMMUNICATION DEVICE WITH LOCATION FEATURES, having Ser. No. 12/713,319, filed on Feb. 26, 2010;

MULTI-FUNCTION ADJUNCT DEVICE FOR USE WITH A HANDHELD WIRELESS COMMUNICATION DEVICE, having Ser. No. 12/713,329, filed on Feb. 26, 2010;

METHODS FOR USE IN CONJUNCTION WITH A HANDHELD WIRELESS COMMUNICATION DEVICE HAVING AN ADJUNCT DEVICE COUPLED THERETO, having Ser. No. 12/713,334, filed on Feb. 26, 2010;

ADJUNCT DEVICE FOR USE WITH A HANDHELD WIRELESS COMMUNICATION DEVICE AS A SCREEN POINTER, having Ser. No. 12/713,350, filed on Feb. 26, 2010;

the contents of which are expressly incorporated herein in their entirety by reference thereto.

BACKGROUND OF THE INVENTION

1. Technical Field of the Invention

The present invention relates to wireless communication devices.

2. Description of Related Art

As is known, wireless communication devices are commonly used to access long range communication networks as well as broadband data networks that provide text messaging, email services, Internet access and enhanced features such as streaming audio and video, television service, etc., in accordance with international wireless communications standards such as 2G, 2.5G, 3G and 4G. Examples of such networks include wireless telephone networks that operate cellular, personal communications service (PCS), general packet radio service (GPRS), global system for mobile communications (GSM), and integrated digital enhanced network (iDEN).

Many wireless telephones have operating systems that can run applications that perform additional features and functions. Apart from strictly wireless telephony and messaging, wireless telephones have become general platforms for a plethora of functions associated with, for example, navigational systems, social networking, electronic organizers, audio/video players, shopping tools, and electronic games. Users have the ability to choose a wireless telephone and associated applications that meet the particular needs of that user. Consequently, the wireless telephone has, in some ways, become an important device for many aspects of the user's life. Misplacing a user's wireless telephone can be an annoying experience. Further, while a wide range of wireless telephones and applications are available today, other functions and features are desirable, particularly for use in conjunction with other wireless devices.

The disadvantages of conventional approaches will be evident to one skilled in the art when presented the disclosure that follows.

BRIEF SUMMARY OF THE INVENTION

The present invention is directed to various system, apparatus and methods of operation that are further described in

the following Brief Description of the Drawings, the Detailed Description of the Invention, and the claims. Other features and advantages of the present invention will become apparent from the following detailed description of the invention made with reference to the accompanying drawings.

BRIEF DESCRIPTION OF THE SEVERAL VIEWS OF THE DRAWINGS

FIG. **1** presents a pictorial representation of a location system for use with a handheld wireless communication device **110** in accordance with an embodiment of the present invention.

FIG. **2** presents a pictorial representation of handheld wireless communication device **110** and adjunct device **100** in accordance with an embodiment of the present invention.

FIG. **3** presents a pictorial representation of handheld wireless communication device **110** and adjunct device **100** in accordance with an embodiment of the present invention.

FIG. **4** presents a pictorial representation of a location system for use with a handheld wireless communication device **110** in accordance with an embodiment of the present invention.

FIG. **5** presents a schematic block diagram of a wireless device **120** and adjunct device **100** in accordance with an embodiment of the present invention.

FIG. **6** presents a pictorial representation of a location system for use with a handheld wireless communication device **110** in accordance with an embodiment of the present invention.

FIG. **7** presents a graphical representation of an antenna pattern in accordance with an embodiment of the present invention.

FIG. **8** presents a pictorial representation of handheld wireless communication device **110** and adjunct device **100** in accordance with an embodiment of the present invention.

FIG. **9** presents a schematic block diagram of an antenna **148** in accordance with an embodiment of the present invention.

FIG. **10** presents a schematic block diagram of an antenna **148'** in accordance with an embodiment of the present invention.

FIG. **11** presents a schematic block diagram of an antenna **148"** in accordance with an embodiment of the present invention.

FIG. **12** presents a graphical representation of a signal magnitude in accordance with an embodiment of the present invention.

FIG. **13** presents a schematic block diagram of adjunct device **100** in accordance with an embodiment of the present invention.

FIG. **14** presents a graphical representation of a difference signal in accordance with an embodiment of the present invention.

FIG. **15** presents a pictorial representation of handheld wireless communication device **110** and adjunct device **100** in accordance with an embodiment of the present invention.

FIG. **16** presents a schematic block diagram of wireless devices **70** and **72** in accordance with an embodiment of the present invention.

FIG. **17** presents a schematic block diagram of paging networks **90** and **92** in accordance with an embodiment of the present invention.

FIG. **18** presents a pictorial representation of a screen display **170** in accordance with an embodiment of the present invention.

FIG. **19** presents a pictorial representation of a screen display **172** in accordance with an embodiment of the present invention.

FIG. **20** presents a schematic block diagram of a wireless device **122** and adjunct device **101** in accordance with an embodiment of the present invention.

FIG. **21** presents a schematic block diagram of devices **90**, **92** and **94** in accordance with an embodiment of the present invention.

FIG. **22** presents a pictorial representation of a screen display **190** in accordance with an embodiment of the present invention.

FIG. **23** presents a pictorial representation of a screen display **192** in accordance with an embodiment of the present invention.

FIG. **24** presents a schematic block diagram of a wireless device **123** and adjunct device **101** in accordance with an embodiment of the present invention.

FIG. **25** presents a schematic block diagram of devices **210**, **212** and **214** in accordance with an embodiment of the present invention.

FIG. **26** presents a pictorial representation of a screen display **220** in accordance with an embodiment of the present invention.

FIG. **27** presents a pictorial representation of a screen display **222** in accordance with an embodiment of the present invention.

FIG. **28** presents a pictorial representation of handheld wireless communication device **110** and adjunct device **100** in accordance with an embodiment of the present invention.

FIG. **29** presents a pictorial representation of handheld wireless communication device **110** and adjunct device **100** in accordance with an embodiment of the present invention.

FIG. **30** presents a pictorial representation of screen pointing system in accordance with an embodiment of the present invention.

FIG. **31** presents a schematic block diagram of video device **254** in accordance with an embodiment of the present invention.

FIG. **32** presents a schematic block diagram representation of a location system in accordance with an embodiment of the present invention.

FIG. **33** presents a schematic block diagram of a handheld wireless communication device **300** in accordance with an embodiment of the present invention.

FIG. **34** presents a pictorial representation of a back view of an adjunct device **330** in accordance with an embodiment of the present invention.

FIG. **35** presents a pictorial representation of a cutaway side view of an adjunct device **330** in accordance with an embodiment of the present invention.

FIG. **36** presents a pictorial representation of a front view of a wireless device **325** in accordance with an embodiment of the present invention.

FIG. **37** presents a flowchart representation of a method in accordance with an embodiment of the present invention.

FIG. **38** presents a flowchart representation of a method in accordance with an embodiment of the present invention.

FIG. **39** presents a flowchart representation of a method in accordance with an embodiment of the present invention.

FIG. **40** presents a flowchart representation of a method in accordance with an embodiment of the present invention.

DETAILED DESCRIPTION OF THE INVENTION

FIG. **1** presents a pictorial representation of a location system for use with a handheld wireless communication device **110** in accordance with an embodiment of the present invention. In particular, a handheld wireless communication device **110**, such as a smart phone, digital book, netbook, personal computer with wireless data communication or other wireless communication device that includes a wireless transceiver for communicating over a long range wireless network such as a cellular, PCS, CDMA, GPRS, GSM, iDEN or other wireless communications network and/or a short-range wireless network such as an IEEE 802.11 compatible network, a Wimax network, another wireless local area network connection or other communications link. Handheld wireless communication device **110** is capable of engaging in wireless communications such as sending and receiving telephone calls and/or wireless data in conjunction with text messages such as emails, short message service (SMS) messages, pages and other data messages that may include multimedia attachments, documents, audio files, video files, images and other graphics. Handheld wireless communication device **110** includes one or more processing devices for executing other applications and a user interface that includes, for example, buttons, a display screen such as a touch screen, a speaker, a microphone, a camera for capturing still and/or video images and/or other user interface devices.

Wireless device **120** is shown that includes a user interface that includes push buttons **10**, a light emitter **14** such as a light emitting diode (LED) or other emitter, and sound emitter **12** such as a beeper, buzzer, speaker or other audio device. While particular user interface devices are shown, the wireless device can similarly include other devices such as a touch screen or other display screen, a thumb wheel, trackball, and/or other input or output devices. The user interface of the wireless device **120** generates a location request signal in response to an indication from a user by for instance, pushing one of the push buttons **10**.

Wireless device **120** further includes a short-range wireless transmitter that transmits an RF paging signal, such as paging signal **16** in response to the location request signal. The short-range wireless transmitter can be part of a transceiver that operates in conjunction with a communication standard such as 802.11, Bluetooth, ZigBee, ultra-wideband, Wimax or other standard short or medium range communication protocol, or other protocol.

Adjunct device **100** includes a housing that is coupleable to the handheld wireless communication device **110** via a communication port of the handheld wireless communication device **110**. The adjunct device **100** includes a short-range wireless receiver that receives the RF paging signal, such as paging signal **16**. The short-range wireless receiver of adjunct **100** can also be part of a transceiver that operates in conjunction with a communication standard such as 802.11, Bluetooth, ZigBee, ultra-wideband, Wimax or other standard short or medium range communication protocol, or other protocol. In particular, the short-range wireless receiver of adjunct device **100** is configured to receive the paging signal **16** generated by wireless device **120**.

Adjunct device includes its own user interface having push buttons **20**, sound emitter **22** and light emitter **24** that emit audio and/or visual alert signals in response to the paging signal **16** to assist the user in locating the handheld wireless communication device. As with the user interface of wireless device **120**, the user interface of adjunct device **100** can similarly include other devices such as a touch screen or other display screen, a thumb wheel, trackball, and/or other input or output devices.

In operation, a user can attach the adjunct device **100** to his or her handheld wireless communication device **110**. If the handheld wireless communication device **110** is lost or mis-

laid, the user can locate the handheld wireless communication device by activating a paging button on the wireless device **120** that causes paging signal **16** to be broadcast. The adjunct device **100** responds to the paging signal **16** by flashing light emitter **24** and/or emitting a loud sound such as a beeping, buzzing or other alarm signal via sound emitter **22**. The user can locate the handheld wireless communication device **110** by homing in on the visual and/or audio emissions.

The further operation of wireless device **120** and adjunct device **100**, including several optional implementations, different features and functions spanning complementary embodiments are presented in conjunction with FIGS. **2-40** that follow.

FIGS. **2** and **3** present pictorial representations of handheld wireless communication device **110** and adjunct device **100** in accordance with an embodiment of the present invention. As shown in FIG. **2**, adjunct device **100** and handheld wireless communication device **110** are decoupled. Handheld wireless communication device **110** includes a communication port **26'** and adjunct device **100** includes a mating plug **26** for coupling the adjunct device **100** to the communication port **26'** of handheld wireless communication device **110**. In an embodiment of the present invention, the communication port **26'** and plug **26** are configured in conjunction with a standard interface such as universal serial bus (USB), Firewire, or other standard interface, however, a device specific communication port such as an Apple iPod/iPhone port, a Motorola communication port or other communication port can likewise be employed. Further, while a physical connection is shown, a wireless connection, such as a Bluetooth link, 802.11 compatible link, an RFID connection or other wireless connection can be employed in accordance with alternative embodiments.

As shown in FIG. **3**, adjunct device **100** is coupled to the handheld wireless communication device **110** by plug **26** being inserted in communication port **26'**. Further, adjunct device **100** includes its own communication port **28'** for coupling, via a mating plug **28**, the adjunct device **100** to an external device **25**, such as a computer or other host device, external charger or peripheral device. In an embodiment of the present invention, the communication port **28'** and plug **28** are configured in conjunction with a standard interface such as universal serial bus (USB), Firewire, or other standard interface, however, a device specific communication port such as an Apple iPod/iPhone port, a Motorola communication port or other communication port can likewise be employed.

In an embodiment of the present invention, the adjunct device passes signaling between the external device **25** and the handheld wireless communication device **110** including, for instance, charging signals from the external connection and data communicated between the handheld wireless communication device **110** and the external device **25**. In this fashion, the external device can communicate with and/or charge the handheld wireless communication device with the adjunct device **100** attached, via pass through of signals from plug **28** to communication port **26'**. It should be noted however, that while communication ports **28'** and **26'** can share a common physical configuration, in another embodiment of the present invention, the communication ports **28'** and **26'** can be implemented via different physical configurations. For example, communication port **26'** can be implemented via a device specific port that carries USB formatted data and charging signals and communication port **28'** can be implemented via a standard USB port. Other examples are likewise possible.

In an embodiment of the present invention, when the adjunct device **100** is coupled to handheld wireless communication device **110**, the adjunct device **100** initiates communication via the communication port **26'** to determine if an application is loaded in the handheld wireless communication device **110**—to support the interaction with the adjunct device **100**. Examples of such applications include a location application or other application that operates in conjunction with the adjunct **100**. If no such application is detected, the adjunct **100** can communicate via communication port **26'** to initiate a download of such an application directly or to send the browser of the handheld wireless communication device **110** to a website store at a remote server or other location where supporting applications can be browsed, purchased or otherwise selected for download to the handheld wireless communication device **110**.

In a further embodiment of the present invention, when a supporting application is loaded in handheld wireless communication device **110**, the handheld wireless communication device **110** initiates communications via the communication port **26'** to determine if an adjunct device **100** is coupled thereto or whether or not an adjunct device has never been coupled thereto. If no such adjunct device **100** is detected, the application can instruct the user to connect the adjunct device **100**. Further, the application can, in response to user selection and/or an indication that an adjunct device has not been previously coupled to the handheld wireless communication device **110**, automatically direct a browser of the handheld wireless communication device **110** to a website store at a remote server or other location where a supporting adjunct devices **100** can be selected and purchased, in order to facilitate the purchase of an adjunct device, via the handheld wireless communication device **110**.

In a further embodiment, the application maintains a flag that indicates if an adjunct device **100** has previously been connected. In response to an indication that an adjunct device has not been previously coupled to the handheld wireless communication device **110**, the application can automatically direct a browser of the handheld wireless communication device **110** to a website store at a remote server or other location where a supporting adjunct devices **100** can be selected and purchased, in order to facilitate the purchase of an adjunct device, via the handheld wireless communication device **110**.

FIG. **4** presents a pictorial representation of a location system for use with a handheld wireless communication device **110** in accordance with an embodiment of the present invention. In particular, adjunct device **100** and wireless device **120** can operate in a reciprocal fashion to locate wireless device **120**. In particular, wireless device **120** includes a housing that is attachable to or includes a ring, clip or other fastener that can be coupled to key **30** as shown or to another personal object such as a coat, a person, a pet or other thing. Further, wireless device **120** can be embodied as a card or other device that can be slipped into a wallet, an article of clothing, a bag or other thing to be located.

In any of these cases, the wireless device **120** includes its own short-range wireless receiver that receives a paging signal **112** transmitted by adjunct device **110**. In response to the paging signal **112**, a light or sound emitter of wireless device **120** emits a detectable alert signal that helps the user locate the personal object. In an embodiment of the present invention, the adjunct device **100** operates in a similar fashion to wireless device **120** to initiate the paging signal **112**. In particular, the transmission of paging signal **112** can be initiated by pressing a button or otherwise interacting with the user interface of adjunct **100**. In a further embodiment, handheld

wireless communication device **100** includes an interactive application that generates application data that is passed to adjunct device **100** via the communication port of the handheld wireless communication device **100**. Adjunct device **100** responds to such application data by initiating the transmission of the paging signal **112**. In either case, a user of handheld wireless communication device **110** that wishes to locate his or her key **30**, or other object coupled to wireless device **120**, initiates the paging signal **112**. The user can then locate the wireless device **120** and corresponding object by homing in on the visual and/or audio emissions of the wireless device **120**.

FIG. **5** presents a schematic block diagram of a wireless device **120** and adjunct device **100** in accordance with an embodiment of the present invention. In particular, wireless device **120** includes short-range wireless transceiver **130** coupled to antenna **138**, processing module **131**, user interface **132** and memory **133**. While not expressly shown, wireless device **120** can include a replaceable battery for powering the components of wireless device **120**. In the alternative, wireless device **120** can include a battery that is rechargeable via an external charging port, for powering the components of wireless device **120**. Adjunct device **100** includes short-range wireless transceiver **140** coupled to antenna **148**, processing module **141**, user interface **142** and memory **143**, device interface **144**, and battery **146**. The processing modules **131** and **141** control the operation of the wireless device **120** and adjunct device **100**, respectively and provide further functionality described in conjunction with, and as a supplement to, the functions provided by the other components of wireless device **120** and adjunct device **100**.

As discussed in conjunction with FIGS. **1-4**, the short-range wireless transceivers **130** and **140** each can be implemented via a transceiver that operates in conjunction with a communication standard such as 802.11, Bluetooth, ZigBee, ultra-wideband, Wimax or other standard short or medium range communication protocol, or other protocol. User interfaces **132** and **142** each can contain one or more push buttons, a sound emitter, light emitter, a touch screen or other display screen, a thumb wheel, trackball, and/or other user interface devices.

The processing module **131** can be implemented using a microprocessor, micro-controller, digital signal processor, microcomputer, central processing unit, field programmable gate array, programmable logic device, state machine, logic circuitry, analog circuitry, digital circuitry, and/or any device that manipulates signals (analog and/or digital) based on operational instructions that are stored in memory, such as memory **133**. Note that when the processing module **131** implements one or more of its functions via a state machine, analog circuitry, digital circuitry, and/or logic circuitry, the memory storing the corresponding operational instructions may be embedded within, or external to, the circuitry comprising the state machine, analog circuitry, digital circuitry, and/or logic circuitry. Further note that, the memory module **133** stores, and the processing module **131** executes, operational instructions corresponding to at least some of the steps and/or functions illustrated herein.

The memory module **133** may be a single memory device or a plurality of memory devices. Such a memory device may be a read-only memory, random access memory, volatile memory, non-volatile memory, static memory, dynamic memory, flash memory, cache memory, and/or any device that stores digital information. While the components of wireless device **120** are shown as being coupled by a particular bus structure, other architectures are likewise possible that include additional data busses and/or direct connectivity between components. Wireless device **120** can include additional components that are not expressly shown.

Likewise, the processing module **141** can be implemented using a microprocessor, micro-controller, digital signal processor, microcomputer, central processing unit, field programmable gate array, programmable logic device, state machine, logic circuitry, analog circuitry, digital circuitry, and/or any device that manipulates signals (analog and/or digital) based on operational instructions that are stored in memory, such as memory **143**. Note that when the processing module **141** implements one or more of its functions via a state machine, analog circuitry, digital circuitry, and/or logic circuitry, the memory storing the corresponding operational instructions may be embedded within, or external to, the circuitry comprising the state machine, analog circuitry, digital circuitry, and/or logic circuitry. Further note that, the memory module **143** stores, and the processing module **141** executes, operational instructions corresponding to at least some of the steps and/or functions illustrated herein.

The memory module **143** may be a single memory device or a plurality of memory devices. Such a memory device may be a read-only memory, random access memory, volatile memory, non-volatile memory, static memory, dynamic memory, flash memory, cache memory, and/or any device that stores digital information. While the components of adjunct device **100** are shown as being coupled by a particular bus structure, other architectures are likewise possible that include additional data busses and/or direct connectivity between components. Adjunct device **100** can include additional components that are not expressly shown.

As shown, the adjunct device includes a battery **146** that is separate from the battery of the handheld wireless communication device **110** and can supply power to short-range wireless transceiver **140**, processing module **141**, user interface **142**, memory **143**, and device interface **144** in conjunction with a power management circuit, one or more voltage regulators or other supply circuitry. By being separately powered from the handheld wireless communication device **110**, the adjunct **100** can operate even if the battery of the handheld wireless communication device is discharged. In this fashion, the user can still page the adjunct device **100** to locate the handheld wireless communication device **110** when the battery of the handheld wireless communication device is discharged.

Device interface **144** provides an interface between the adjunct device **100** and the handheld wireless communication device **110** and an external device **25**, such as a computer or other host device, peripheral or charging unit. As previously discussed in conjunction with FIGS. **1-4**, the housing of adjunct device **100** includes a plug, such as plug **26**, or other coupling device for connection to the communication port **26'** of the handheld wireless communication device **110**. In addition, the housing of adjunct device **100** further includes its own communication port, such as communication port **28** or other coupler for connecting to an external device **25**. Device interface **144** is coupled to the communication port **28** that operates as a charging port. When adjunct device **100** is connected to an external source of power, such as external device **25**, device interface **144** couples a power signal from the external power source to charge the battery **146**. In addition, the device interface **144** couples the power signal from the external power source to the communication port of the handheld wireless communication device **110** to charge the battery of the handheld wireless communication device. In this fashion, both the handheld wireless communication device **110** and the adjunct device **100** can be charged at the same time. Further, the handheld wireless communication

device **110** can be charged while the devices are still coupled—without removing the adjunct device **100** from the handheld wireless communication device **110**.

While the battery **146** is separate from the battery of the handheld wireless communication device **110**, in an embodiment of the present invention, the device interface **144** is switchable between an auxiliary power mode and a battery isolation mode. In the battery isolation mode, the device interface **144** decouples the battery **146** from the battery of the handheld wireless communication device **110**, for instance, to preserve the charge of battery **146** for operation even if the battery of the handheld wireless communication device **110** is completely or substantially discharged. In the auxiliary power mode, the device interface **144** couples the power from the battery **146** to the handheld wireless communication device **110** via the communication port to charge the battery of the handheld wireless communication device **110**. In this fashion, the user of the handheld wireless communication device **110** at or near a discharged state of the handheld wireless communication device battery could opt to draw power from the battery **146**. In an embodiment of the present invention, signaling from user interface **142** could be used to switch the device interface **144** between the battery isolation mode and the auxiliary power mode. Alternatively or in addition, signaling received from the handheld wireless communication device via the communication port, or remotely from wireless device **120**, could be used to switch the device interface **144** between the battery isolation mode and the auxiliary power mode.

Device interface **144** includes one or more switches, transistors, relays, or other circuitry for selectively directing the flow of power between the external device **25**, the battery **146**, and the handheld wireless communication device **110** as previously described. In addition, the device interface **144** includes one or more signal paths, buffers or other circuitry to couple communications between the communication port of the adjunct device **110** and the communication port of the handheld wireless communication device **110** to pass through communications between the handheld wireless communication device **110** and an external device **25**. In addition, the device interface **144** can send and receive data from the handheld wireless communication device **110** for communication between the adjunct device **100** and handheld wireless communication device **110**.

FIG. **6** presents a pictorial representation of a location system for use with a handheld wireless communication device **110** in accordance with an embodiment of the present invention. In this embodiment, adjunct device **100** operates as previously described to transmit a paging signal **112**. In this embodiment however, wireless device **120** transmits a location signal **114** via short-range wireless transceiver **130**, such as a beacon signal or other location signal. Adjunct device **100** aids the user of handheld wireless communication device **110** in homing in on the location signal **114** based on the signal strength of the location signal **114** as received by short-range wireless transceiver **140**.

In an embodiment of the present invention, the handheld wireless communication device **110** executes a location application that operates under user control to initiate the transmission of paging signal **112** to locate key or keys **30** or other object associated with wireless device **120**. The signal strength of the location signal **114** from short-range wireless transceiver **140** is converted to signal strength data by processor **141** and sent to handheld wireless communication device **110** via device interface **144** and the communication port of the handheld wireless communication device **110**. The signal strength data is used by the location application to generate a graphical user interface including display screen **150**. As shown, display screen **150** includes an indication **152** of the particular object being located and a visual signal strength indication **154**. In this fashion, the user can move around with the handheld wireless communication device **110** and hunt for the key or keys **30**, guided by changes in the visual signal strength indication **154**. In particular, the user of handheld wireless communication device **110** can move about, seeking to maximize the visual signal strength indication **154** until the key or keys **30** are located.

While signal strength is described above as a measure of approximate distance to a remote device, the time of flight methodology described in conjunction with FIG. **37** or other distance approximations can likewise be employed.

FIG. **7** presents a graphical representation of an antenna pattern in accordance with an embodiment of the present invention. A possible reception pattern of antenna **148** of adjunct device **100** is shown. The antenna pattern **160** is shown in two dimensions, corresponding to, for instance, the horizontal plane of the user. In particular, antenna **148** can include a pair of loop antennas, monopoles or dipoles or other antenna configurations that are aligned in position and phase to have a directional pattern that includes a single null. While a cardioid pattern is presented, other antenna patterns with a single null or with multiple nulls, such as multiple closely spaced nulls may also be employed.

As previously discussed, the short-range wireless transceiver **140** generates signal strength in response to the location signal **114** from wireless device **120**. The signal strength is used to generate signal strength data that is communicated to the location application of handheld wireless communication device **110** via the communication port of the handheld wireless communication device. The use of a directional antenna in the implementation of antenna **148** can assist the location application in determining a direction to the wireless device **120**. For example, the user can change the orientation of the handheld wireless communication device to determine the direction to the wireless device **120**. The location application can detect when the orientation of the handheld wireless communication device corresponds to the direction of the wireless device, based on the signal strength data. When the null direction of the antenna **148** is pointing toward the wireless device **120**, a null signal strength reading will occur. The location application can indicate a match to the user to inform him or her that the handheld wireless communication device **110** is pointed toward the wireless device **120**.

In an alternative embodiment, the user is instructed to "turn around" to gather **360** degrees of directional data. The signal strength data can be analyzed in conjunction with one or more orientation sensors of the handheld wireless communication device **110**, to determine a direction to the wireless device **120**. In particular, the location application can determine the particular orientation of the device corresponding to the point where the null of antenna pattern **160** is aligned with the direction to the wireless device **120**, and feedback that direction to the user via a directional indicator.

In an alternative embodiment, the antenna **148** includes a steerable pattern **150** that includes a steerable null. The location application of handheld wireless communication device **110** can, for example, instruct the user to stand still while the short-range wireless transceiver **140** completes a directional sweep. The location application sends application data to the adjunct device via device interface **144** that instructs the processor **141** to command the programmable antenna to sweep the null direction by 360 degrees and to collect corresponding signal strength data. Analysis of the signal strength data by the location application can be used to determine the

direction to the wireless device **120** based on the direction corresponding to the null. Feedback of that direction can be provided to the user via a directional indicator generated by the location application.

Further discussion of these features including several different embodiments and optional features are discussed in conjunction with FIGS. **8-15** that follow.

FIG. **8** presents a pictorial representation of handheld wireless communication device **110** and adjunct device **100** in accordance with an embodiment of the present invention. In particular, a display screen is shown that includes a signal strength indication **164** and an indication of direction **166** that can be used in conjunction with the location application examples discussed in association with FIG. **7**. It should be noted that the location application of handheld wireless communication device **110** can operate to invert the signal strength data to generate the signal strength indication **164** so that when the null direction of the antenna pattern **160** is aligned with direction to wireless device **120**, the low signal strength caused by the null is translated into a high signal strength indication, indicating to the user the device is pointed in the right direction.

In this particular embodiment, the indication of direction **166** is fixed, and is pointed in the null direction of the antenna **148**. As the user changes the orientation of the handheld wireless communication device **110**, the (inverted) signal strength indication **164** varies. When the inverted signal strength indication **164** peaks, this indicates that the null direction of the antenna **148** (and the indication of direction **166**) is pointing toward the wireless device **120**.

FIG. **9** presents a schematic block diagram of an antenna **148** in accordance with an embodiment of the present invention. In particular, antenna **148** includes two separate antennas **168** and **169** that are selectable by switch **161** in response to control signal **165**. In an embodiment of the present invention, the antenna **168** is an omnidirectional or substantially omnidirectional antenna and antenna **169** has a radiation pattern that includes a null, as described in conjunction with FIGS. **7-8**. RF signals **167** are sent or received by the particular antenna **168** or **169** that is selected. The control signal **165** can be generated by processor **141** or application data from a location application of handheld wireless communication device **110**.

In operation, control signal **165** is generated to select antenna **168** for standard operation. In this fashion, when the adjunct device **100** sends paging signals **112** or receives paging signal **16**, signals can be received from all directions. When the adjunct device **100** is receiving location signals **114** from a remote wireless device **120**, control signal **165** is generated to switch antenna **148** to antenna **169**. In this fashion the null pattern of antenna **169** can be used by the location application of handheld wireless communication device **110** to provide directional feedback to the user.

FIG. **10** presents a schematic block diagram of an antenna **148'** in accordance with an embodiment of the present invention. In particular, antenna **148** is implemented via a programmable antenna **148'** that has a controllable radiation pattern. In one mode of operation, the programmable antenna is controlled via control signal **163** to an omnidirectional or substantially omnidirectional antenna pattern. The control signal **163** can be generated by processor **141** or application data from a location application of handheld wireless communication device **110**. This mode of operation is selected when the adjunct device **100** sends paging signals **112** or receives paging signal **16**. In this fashion, signals can be received from all directions.

When the adjunct device is receiving location signals **114** from a remote wireless device **120**, control signal **163** is generated to switch antenna **148'** to an antenna pattern, such as antenna pattern **160**, and optionally to steer the null direction in conjunction with a directional sweep. In this mode of operation, the null pattern of antenna **148'** can be used by the location application of handheld wireless communication device **110** to provide directional feedback to the user.

FIG. **11** presents a schematic block diagram of an antenna **148"** in accordance with an embodiment of the present invention. In particular, antenna **148"** is a programmable antenna that includes two separate antenna elements **176** and **174**. The antenna **148"** is configurable to a first configuration where switch **161** decouples antenna element **174** and only antenna element **176** is active. In a second configuration, switch **161** coupled antenna element **174** to antenna element **176** and both elements are active.

In an embodiment of the present invention, antenna elements **174** and **176** are separate loops, monopoles, dipoles or other antenna elements. The antenna formed by only antenna element **176** produces an omnidirectional or substantially omnidirectional antenna pattern. The antenna formed by the combined antenna with antenna elements **174** and **176** has a radiation pattern that includes a null. Antenna **148"** can be operated in response to control signals **165** in a similar fashion to the antenna **148** of FIG. **9**.

In operation, control signal **165** is generated to select the omnidirectional antenna configuration for standard operation. In this fashion, when the adjunct device **100** sends paging signals **112** or receives paging signal **16**, signals can be received from all directions. When the adjunct device is receiving location signals **114** from a remote wireless device **120**, control signal **165** is generated to switch antenna **148"** to the second configuration. In this fashion the null pattern of antenna **148"** can be used by the location application of handheld wireless communication device **110** to provide directional feedback to the user.

FIG. **12** presents a graphical representation of a signal magnitude in accordance with an embodiment of the present invention. In particular, signal strength M represents signal strength data collected by short-range wireless transceiver **140** in response to location signal **114**. As discussed in conjunction with FIGS. **7-11**, an antenna having a null direction is used in this mode of operation of adjunct **100**. Signal strength M is generated over a range of directions, such as over 360 degrees of rotation, either by manually steering the handheld wireless communication device **110** coupled to adjunct **100** in the case of a fixed antenna such as antenna **148** or **148"**, or by steering the beam of the antenna in an implementation of a programmable antenna, such as antenna **148'**. In either case the direction to the wireless device **120** can be determined based on the direction θ_1, where the antenna null is pointed at the wireless device **120**. As shown, the null in the antenna pattern causes the signal strength data to dip in a recognizable way.

In an embodiment of the present invention, the direction θ_1 is determined based on the direction of lowest signal magnitude M. However other methodologies including pattern recognition can be employed to analyze the characteristics of the signal strength data to recognize the null direction.

FIG. **13** presents a schematic block diagram representation of adjunct device **100'** in accordance with an embodiment of the present invention. In particular, a further embodiment of adjunct device **100** is shown that includes many common elements of the embodiment of FIG. **5** that are referred to by

common reference numerals. In addition, adjunct device **100'** includes a second short-range wireless transceiver **140'** and a second antenna **149**.

In this embodiment, the antenna **168** is an omnidirectional or substantially omnidirectional antenna and antenna **169'** has either a fixed or steerable radiation pattern that includes a null, as described in conjunction with antennas **148**, **148'**, **148"** or **169**. In operation, when the adjunct device **100** sends paging signals **112** or receives paging signal **16**, short-range wireless transceiver **140** is used and signals can be received from all directions. When the adjunct device is receiving location signals **114** from a remote wireless device **120**, short-range wireless transceivers **140** and **140'** are both engaged and generate separate signal strength data. A difference between the signal strength data corresponding to antennas **168** and **148'** is used to determine the null direction. In this fashion, the difference between the signal strength data from the two signal paths can be used to distinguish between high loss conditions and a direction corresponding to a null.

FIG. **14** presents a graphical representation of a difference signal in accordance with an embodiment of the present invention. In particular, signal strength D(θ) represents the difference between the magnitude of the signal strength data collected by short-range wireless transceivers **140** and **140'** in response to location signal **114**. Representing the signal strength generated by the short-range wireless transceiver **140** as $SS_o(\theta)$, and the signal strength of the short-range wireless transceiver **140** as $SS_n(\theta)$, the difference D(θ), can be determined based on:

$$D(\theta)=|SS_o(\theta)|-|SS_n(\theta)|$$

As discussed in conjunction with FIGS. **7-13**, signal strength difference D(θ) is generated over a range of directions, such as over 360 degrees of rotation, either by manually steering the handheld wireless communication device **110** coupled to adjunct **100** in the case of a fixed antenna, or by steering the null of the antenna in an implementation of a programmable antenna. In either case the direction to the wireless device **120** can be determined based on the direction θ_1, where the antenna null is pointed at the wireless device **120**. As shown, the null in the antenna pattern causes the difference in signal strength data to increase in a recognizable way.

In an embodiment of the present invention, the direction θ_1 is determined based on the direction of highest signal magnitude D(θ). However other methodologies including pattern recognition can be employed to analyze the characteristics of the signal strength data to recognize the null direction.

FIG. **15** presents a pictorial representation of handheld wireless communication device **110** and adjunct device **100** in accordance with an embodiment of the present invention. In particular, a display screen is shown that includes an indication of direction **166'** that can be used in conjunction with the location application examples discussed in association with FIG. **7-14**.

In this particular embodiment, the indication of direction **166'** moves based on the repeated directional sweeps by a steerable antenna such as antenna **148'**. Indication of direction **166'** indicates, for instance, the direction θ_1 as previously discussed. As the user changes the orientation of the handheld wireless communication device **110**, indication of direction **166'** varies based on the updated direction θ_1. The indication of direction **166'** can be used in this fashion to point the user in the direction of the wireless device **120**.

It should be noted that while the embodiment of FIGS. **7-15** have discussed the use of one or more antennas with a null, an antenna with a single lobe pattern or a steerable lobe pattern could be employed in a similar fashion to detect signal peaks instead of signal nulls.

In yet another embodiment of the present invention, a single antenna **148** is employed that has an omnidirectional pattern at one frequency or range of frequencies, yet exhibits a null at another frequency or range of frequencies. In particular, a location signal, such as location signal **114**, can be sent at frequency corresponding to the null pattern and received by short range wireless transceiver **140**. Instead of switching antennas **168** and **169**, or programming an antenna **148'** to different patterns as described in conjunction with FIGS. **9-11**, two different patterns can be implemented in the same antenna to support both omnidirectional and null modes of operation.

In a further embodiment of the present invention, a receive antenna is employed that includes a plurality of null directions at different compass points in two dimensions that are realized at different frequencies. For example, an antenna, such as antenna **148** can exhibit a plurality of null directions θ_i, that each have a corresponding null frequency f_i. In particular, a location signal, such as location signal **114**, can include a swept frequency chirp that begins at a low frequency and ends at a high frequency that includes each of the discrete frequencies f_i. The short range wireless transceiver **140** can determine the direction to the remote device by detecting the frequency f_i where the null occurs, for example based on a lowest signal level, and correlating the null frequency, via a lookup table or other data structure, to the corresponding direction θ_i.

While the foregoing description has focused on location in a two dimensional sense, three-dimensional location can be accomplished in a similar fashion. In particular, directional antennas can be employed in both the x-y and x-z or y-z planes to distinguish z-axis, as well as x and y axis, coordinates. It should be noted that multiple directional antennas can be employed that are arranged orthogonally or non-orthogonally as long as the null directions span either all or substantially all of three dimensional space or a portion of three dimensional space that is of interest. Further more complex antenna designs with three-dimensional antenna patterns can likewise be employed in a similar fashion to determine directionality in three-dimensions. Three dimensional location can be useful, for example, in locating objects on different floors of a building or other structure such as a mine or a ship, determining of a person with a remote device has fallen overboard, as well as other three-dimensional applications. In addition or alternative to providing three dimensional direction finding, multiple antennas can be employed in a diversity receiver that, for example includes two or more receivers. Such configurations can be employed to mitigate the effects of fading, multipath interference and other path losses to provide more stable reception of signals, and more stable measurement of signal strength, round trip signal delay, etc.

FIG. **16** presents a schematic block diagram of wireless devices **70** and **72** in accordance with an embodiment of the present invention. In particular, the devices **70** and **72** can each be either a wireless device **120** or an adjunct device **100**. The two devices can be sold as a set and are pre-paired to communicate with one another. In another embodiment of the present invention, the user can configure the devices **70** and **72** to be paired with one another.

In pairing, one or both devices **70** and **72** initiate the pairing procedure. For example, a user interface, such as user interface **132** or **142** generates a pairing signal in response to an indication from a user to pair the devices. A short-range wireless transceiver, such as short-range wireless transceiver

130 or 140, communicates RF signals, such as pairing signals 116 to pair the devices 70 and 72.

While two devices 70 and 72 are shown, three or more devices can be paired together in this fashion to form a paging network. In one mode of operation, paging signals, such as paging signals 16 or 112 sent by a single device are received by all other devices and cause each of the receiving devices to generate a detectable alert signal. In another mode of operation, paging signals 16 or 112 can be generated that are addressed to a particular unit, based on addresses or other identifiers received from or assigned to, each device during the pairing procedure. For example, each device 70, 72, . . . includes a unique device identifier that is shared with other devices during the pairing procedure. Paging signals, such as paging signals 16 or 112 can include the unique identifier to direct a paging signal to a particular device. In other words, when a device 70 or 72, receives a paging signal, it extracts the device identifier from the signal and compares it to its own device identifier stored in memory. If they match, the device emits a detectable alert. If the identifiers do not match, the page is presumed to be directed to another device and no alert is generated.

In an embodiment of the present invention, the paging signals 16 and/or 112 can further contain an identifier of the device that initiated the page. In this fashion, a device that receives a page and that is paired with multiple devices can determine which other device initiated the paging signal 16 or 112.

In an embodiment of the present invention, the paging signals 16 and/or 112 can also contain an paging data such as text, a text message, voice, graphics or other data that is conveyed from the device 70, 72 . . . that initiated the paging signal 16 or 112 and the device to the device that receives the page. This functionality creates the possibility of wireless device 120 and adjunct device 100 being used for applications, other than simply location of a lost object.

FIG. 17 presents a schematic block diagram of paging networks 90 and 92 in accordance with an embodiment of the present invention. In particular, paging network 90 includes devices 80-83 that have been paired together. In addition, paging network 92 includes devices 83-85 that have been paired together. The devices 80-85 can each be either a wireless device 120 or an adjunct device 100. As shown, device 83 has been paired with devices from both paging networks.

In a broadcast mode of operation, paging signals, such as paging signals 16 or 112 sent by a single device, are received by all other devices in a network and cause each of the receiving devices to generate a detectable alert signal. In this fashion, devices 80-83 can each page all of the remaining devices in paging network 90. Devices 83-85 can each page all of the remaining devices in paging network 92. In an unicast mode of operation, paging signals 16 or 112 can be generated that are addressed to a particular unit, based on addresses or other identifiers received from or assigned to, each device during the pairing procedure. In this fashion, devices 80-83 can each page one of the remaining devices in paging network 90. Devices 83-85 can each page one of the remaining devices in paging network 92.

As discussed above, device 83 resides in both networks. Consequently, device 83 can be paged by a device from either network or can page devices from either network. However, in this configuration, device 80 from paging network 90 cannot page device 85 from paging network 92, and vice versa.

In an embodiment of the present invention, a device wishing to interact with another device repeatedly transmits a paging signal 16 or 112 for an interval of time greater than a listening device's wake-up-and-listen period. Say for example, a device wakes up every two seconds to "listen," the issuing device can transmit a paging signal 16 or 112 for three seconds. This strategy has obvious power consumption advantages.

While a paging application is discussed above, other applications, such as device tracking, can be enabled by the formation of paging networks 90 and 92 described above. Tracking can be implemented slightly differently. On wake-up, say every two seconds, a device transmits "tracking" information one time, then goes into listen mode to see if a paging signal 16 or 112 has been issued. The additional power consumption for the short transmit is nominal, as most of the power is consumed in the wake-up cycle itself. A device that "cares" to listen for location information can be placed into a state of listening for an extended time, say 3 seconds in our example, but it might do this only every 30 seconds, so this power hungry operation is not repeated very often. This tracking mode of operation allows a listening device to transmit useful information to any device that might care to take the time to listen periodically or on demand. In accordance with this example, a particular device 83 can be configured to track all other devices in the networks 90 and/or 92 in near real-time. The device 83 simply listens at appropriate intervals, as commanded, until all the desired information is collected from devices that are present in networks 90 and/or 92 without having to issue a paging signal 16 or 112, thus conserving battery power for both listener and talker.

In one application, the generation of location signals between devices can be used to determine if two devices are in proximity to one another. For example, devices 80-85 are associated with different people, objects, etc., and the location signals received by device 83 from devices 80-82 or 84-85, indicates which of these devices are present.

In this fashion, device 83 can determine which people or objects are in its proximity, or not in its proximity. For example, if device 83 is an adjunct associated with mom's wireless phone, device 80 is attached to the car keys and device 81 is an adjunct associated with her son's telephone, a mom can determine the proximity of her son and her keys. In response to location signals received by the adjunct device 83, the mom can determine whether or not her son and/or the car keys are in her proximity. A proximity application executed by her wireless phone can keep track of which of the devices 80-82 or 84-85 are in range and which are not, present alerts such as audible or visual alerts when a device comes in range or goes out of range, etc. In addition, the use of directional and/or distance information can augment the application to determine a nearest neighboring device or devices, plot estimated positions on a map, etc.

In addition to the applications listed above, other applications are possible including geo-caching and other social networking or gaming applications enabled by one or more devices that have been previously paired are auto-detected to determine the proximity of these devices and or the objects or persons associated therewith.

FIG. 18 presents a pictorial representation of a screen display 170 in accordance with an embodiment of the present invention. In particular, a screen display 170 is shown for display via a graphical user interface generated by a location application of handheld wireless communication device 110. As shown, the graphical user interface includes a menu that indicates the plurality of personal objects, that each correspond to one of a plurality of remote device such as devices 70 or 72, or devices 80-85.

In an embodiment of the present invention, the pairing procedure described in conjunction with FIGS. 16-17 generates a list that identifies the plurality of remote devices and the

plurality of personal objects. In particular, as a device is paired with the adjunct device **100**, the location application of handheld wireless communication device queries the user to enter a name of an object or other identifier associated with the particular remote device being paired with the adjunct device **100**. The names so entered are stored in the list in association with the device identifiers or other address information for the corresponding paired device that is either generated or received during the pairing process.

As shown, the paging menu is generated based on the list of objects—in this case, the objects identified **1-6**. The user initiates a page to locate one of the objects via its wireless device **120** or adjunct device **100**, by selecting the particular object from the menu.

FIG. **19** presents a pictorial representation of a screen display **172** in accordance with an embodiment of the present invention. In particular, a screen display **172** is shown for display via a graphical user interface generated by an application of handheld wireless communication device **110**, such as a general paging application. As shown, the graphical user interface includes paging data received via paging signal **16** that indicates both the source of the page "Sue's Phone" and a text message, in this case, "Are you ready to leave?".

In operation, the text message is generated by a similar paging application of Sue's Phone that is coupled to its own adjunct device **100**. The text message is included in the paging data and paging signals **112** sent via the adjunct device **100** of Sue's Phone. The paging data is received and decoded by the short-range wireless transceiver **140** of adjunct device **100**—associated with the handheld wireless communication device **110** that generates screen display **172**. The processing module **141** passes the paging data via the device interface **144** and communication port **26'** of handheld wireless communication device **110** to the paging application. In addition to generating the detectable alert signal via the user interface **142** of adjunct device, the screen display **172** is generated by the paging application of handheld wireless communication device. As shown, this feature provides greater functionality in support of more advanced and complex applications.

FIG. **20** presents a schematic block diagram of a wireless device **122** and adjunct device **101** in accordance with an embodiment of the present invention. In particular, wireless device **122** and adjunct device **101** include each of the components of wireless device **120** and adjunct device **100** previously described. In addition, the wireless device **122** and adjunct device **101** include short-range wireless transceivers **130'** and **140'** that each include infrared (IR) transmitters for sending IR signals, such as IR signals **192** and **183** to a remote device, such as device **94**. Device **94** can be an automobile, alarm system, audio component, video component, game or other home media device or other device that is controlled in response to IR signals from an IR remote controller.

In an embodiment of the present invention, the adjunct device **100** is coupled to a handheld wireless communication device **110** that executes a remote control application that operates in a similar fashion to a universal remote control device for controlling the operation of a device **94** that operates based on IR remote control signals. In operation, the device interface **144** receives application data from the remote control application of the handheld wireless communication device **110** via the communication port of the handheld wireless communication device **110**. The application data includes remote control data for controlling the operation of device **94**. While a single device **94** is shown, the handheld wireless communication device **110** and adjunct device **101** can control a plurality of such devices in a similar fashion.

In an embodiment of the present invention, the short-range wireless transceiver **140'** generates IR signals **182** based on the remote control data to directly control the operation of device **94**. In a further embodiment, adjunct device **101** is paired with wireless device **122** to operate as an IR relay device. In this embodiment, the remote control data is transmitted via short-range wireless transceiver **140** via RF signals **180**. Short-range wireless transceiver **130** receives and decodes the remote control data and retransmits the remote control data as IR signals **183** via short-range wireless transceiver **130'**. In this further embodiment, the wireless device **122** can be located in close proximity and within line of sight with the device **94**. The adjunct device **101** and handheld wireless communication device **110** can control the operation of device **94** from a different room or otherwise, while wireless device **122** is in range of RF signals **180**.

While the foregoing description has focused on IR devices, in a similar fashion, devices **101**, **122** and/or device **92** can include a short range wireless transceiver **130'** or **140'**, such as a Bluetooth transceiver, 802.11 transceiver or other wireless transceiver that operates via RF signals. In one application, devices **101**, **122** and/or device **92** can control a compatible remote device, such as device **94**. In addition, the RF implementation of short-range wireless transceiver **130'** or **140'** can be used for other uses. In an embodiment of the present invention, paging signals or other messages can be transmitted to a home computer via a Bluetooth or 802.11 connection and relayed indirectly to the handheld wireless communication device **110** via the internet, wireless local area network and/or the long range wireless transceiver of the handheld wireless communication device **110**.

FIG. **21** presents a schematic block diagram of devices **90**, **92** and **94** in accordance with an embodiment of the present invention. In an embodiment of the present invention device **90** is implemented via adjunct device **101** and handheld wireless communication device **110**, and device **92** is implemented via either wireless device **122** or adjunct device **101** and handheld wireless communication device **110** operating in a similar fashion to wireless device **122**.

In a similar fashion to the system of FIG. **20**, device **90** is paired with wireless device **92** to operate as an IR relay device. Remote control data is transmitted via RF signals **180**. Device **92** receives the RF signals **184** and decodes the remote control data and retransmits the remote control data as IR signals **186** to control device **94**

FIG. **22** presents a pictorial representation of a screen display **190** in accordance with an embodiment of the present invention. In particular, a screen display **190** is shown that is generated by a remote control application for display on handheld wireless communication device **110**. As shown, the user interacts with the remote control setup menu to enter one or more devices to be emulated. In the example shown, a hypothetical "Cony 1200XR DVR" device is selected. In response to the selection, the remote control application retrieves a remote control data configuration for this device from memory, such as the memory **143** of adjunct device **100** or the memory of the handheld wireless communication device so that remote control data transmitted as either RF signals **180** or IR signals **182** are properly formatted for control of the selected device. In an embodiment of the present invention, instead of storing remote control configuration data locally, the application contacts a remote server via the internet to retrieve the remote control configuration data. In this fashion, the long range transceiver or other wireless transceiver of handheld wireless communication device **110** can be used to gather remote control configuration data from an up to date list of current and legacy devices.

In a further mode of operation, remote graphics data corresponding to the look of the native remote control device for the selected "Cony 1200XR DVR" is also retrieved from memory, such as the memory **143** of adjunct device **100**, the memory of the handheld wireless communication device, or from a remote server as described above. This remote graphics data can be used by the remote control application for emulating the look of the native remote control device for the selected "Cony 1200XR DVR", as will be shown further in conjunction with FIG. **23**.

While not shown, the set-up menu may further prompt the user to establish one or more tasks to be performed by one or more devices to be controlled. In response, to these selections and the remote control configuration data retrieved for each device, the application can automatically establish a macro program to implement each task. In an example involving the control of a home media center, tasks might include: playing a DVD, watching TV, playing a CD, listening to the radio, playing a stored audio file or stored video file, accessing the internet to listen to streaming audio, accessing the internet to watch a streaming video, etc. For each selected task, the application configures the specific remote control operations required to control the devices of the home media center to states that correspond to the particular task.

In addition to task selection, the set-up menu may further prompt the user to establish one or more groups of devices to be controlled, and set up tasks associated with each group. For example, one group of devices might include the home media center in the living room, a second group of device might include the stereo in the bedroom, a third group of devices might include the lights in the dining room, etc.

FIG. **23** presents a pictorial representation of a screen display **192** in accordance with an embodiment of the present invention. In particular, a screen display **192** is shown that is generated by a remote control application for display on handheld wireless communication device **110**. As shown, the display of handheld wireless communication device **110** creates a virtual remote control that emulates the look of the native remote control device for the device selected to be controlled—in this case, the "Cony 1200XR DVR". In operation, the user interacts with the virtual remote control to generate remote control data for controlling the selected device, either directly from adjunct device **100** or via an IR relay device such as wireless device **122**.

In an alternative embodiment involving one or more tasks established as described in conjunction with FIG. **22**, the screen display be "task oriented" instead of device oriented as shown in FIG. **23**. For each selected task, the remote control application configures the screen display of the handheld wireless communication device **110** to implement a menu of the particular remote control commands associated with that particular task.

For instance, the user can be presented with a menu of groups that have been configured. Once a group has been selected, a menu of tasks associated with that group is presented. Once a particular task is selected, the menu presents user options to control the particular actions associated with the selected task. For example, when a "watch TV" task is selected, the user can be presented options to increase or decrease the TV volume, change the channel, go to an electronic program guide, etc. In a further example, when a "play a DVD" task is selected, the user can be presented options to increase the volume, decrease the volume, play, stop, pause, eject, fast forward, skip to the next section, go to the main menu, etc. It should be noted that each task may routinely involve the control of multiple devices of the home media center, and the particular actions associated with the selected task may require different devices of the home media center to be controlled.

FIG. **24** presents a schematic block diagram of a wireless device **123** and adjunct device **103** in accordance with an embodiment of the present invention. In particular, adjunct device **103** includes each of the components of adjunct device **100** previously described. In addition, the adjunct device **103** includes short-range wireless transceiver **140"** that includes a transmitter for RF signals that contain home automation data. Device **123** includes similar components to wireless device **120** but further contains a control interface, such as a relay, triac, transistor or other control device for controlling the operation of device **214**, such as a lamp or other home lighting, an appliance, a thermostat, or other home device. In an embodiment of the present invention, the wireless device **123** is paired with the adjunct device **103** and operates in a similar fashion to a Homelink, Insteon or other home automation device controller to control the operation of an external device **214** in response to RF signals **200** from adjunct device **103**.

In an embodiment of the present invention, the adjunct device **100** is coupled to a handheld wireless communication device **110** that executes a home automation application for controlling the operation of a device **214**. In operation, the device interface **144** receives application data from the home automation application of the handheld wireless communication device **110** via the communication port of the handheld wireless communication device **110**. The application data includes control data for controlling the operation of device **214** via wireless device **123**. While a single device **214** is shown, the handheld wireless communication device **110** and adjunct device **101** can control a plurality of such devices in a similar fashion. The short-range wireless transceiver **140"** generates RF signals **200** based on the control data to control the operation of the device coupled to device **123**. The adjunct device **101** and handheld wireless communication device **110** can control the operation of device **214** from a different room or otherwise, while wireless device **123** is in range of RF signals **200**.

FIG. **25** presents a schematic block diagram of devices **210**, **212** and **214** in accordance with an embodiment of the present invention. In an embodiment of the present invention device **210** is implemented via adjunct device **103** and handheld wireless communication device **110**, and device **212** is implemented via a home automation device controller. In a similar fashion to the system of FIG. **24**, device **210** is paired with wireless device **212** to operate in a home automation mode. Control data is transmitted via RF signals **200**. Device **212** receives the RF signals **200** and decodes the control data to control device **214**.

FIG. **26** presents a pictorial representation of a screen display **220** in accordance with an embodiment of the present invention. In particular, a screen display **220** is shown for display via a graphical user interface generated by a home automation application of handheld wireless communication device **110**. As shown, the graphical user interface includes a menu that indicates the plurality of devices **214** to be controlled, that each correspond to one of a plurality of devices **212**.

In an embodiment of the present invention, the pairing procedure described in conjunction with FIG. **25** generates a list that identifies the plurality of devices **212** and the plurality of devices **214**. In particular, as a device **212** is paired with the adjunct device **100**, the home automation application of handheld wireless communication device queries the user to enter a name of an object or other identifier of the device **214** associated with the device **212** being paired with the adjunct

device **100**. The names so entered are stored in the list in association with the device identifiers or other address information for the corresponding paired device **212** that is either generated or received during the pairing process.

As shown, the home automation menu is generated based on the list of devices **214**—in this case, the devices identified **1-6**. The user initiates the control of a device **214** via its wireless device **120** or adjunct device **100**, by selecting the assigned name of the device **214** from the menu.

While not shown, the set-up menu may further prompt the user to establish one or more tasks to be performed by one or more devices to be controlled. These tasks might include: watching TV, reading a book, having a party, etc. For each selected task, the application configures the specific remote control operations required to control the devices of the home to states that correspond to the particular task. In the watching TV task, the lights might be dimmed to a particular level, particular lights might be turned on for reading a book. For a party, all of the lights might be turned in areas of the home associated with entertaining while the temperature of the heating and cooling system may be decreased to compensate for the additional heat produced by the guests themselves.

As discussed in conjunction with the remote control application, in addition to task selection, the set-up menu may further prompt the user to establish one or more groups of devices to be controlled, and set up tasks associated with each group. For example, one group of devices might include the living room lighting, a second group of device might include outdoor lighting, a third group of devices might include the home heating/cooling system, etc.

Further, the set-up menu may further prompt the user to establish one or more complex tasks. The operation of lights, TV's, and the like, can be logged over time. This log could be re-played in "vacation-mode" to give a more realistic simulation of being home, compared with the use of timers, not to mention the increased convenience of this method. In addition to remote control and/or home automation devices, the tasks can further involve interaction with one or more remote wireless devices such as remote wireless device **120**. For instance, a more complex task might include, turning on an overhead light when a person carrying the remote wireless device enters a room between the hours of x and y, but during other hours illuminate the night light, otherwise turn off all lights.

FIG. **27** presents a pictorial representation of a screen display **222** in accordance with an embodiment of the present invention. In particular, a screen display **222** is shown for display via a graphical user interface generated by an application of handheld wireless communication device **110**, such as a general paging application. As shown, the graphical user interface includes an identified device **214** "Bedroom Lamp" and interactive controls for controlling the operation of the selected device **214**.

In operation, control data is generated by the home automation application is response to the user's interaction with the screen **222**. The control data is passed from the handheld wireless communication device to the adjunct device **103** via the communication port and the device interface **144**. RF signals **200** containing the control data are generated by short-range wireless transceiver **140"** and transmitted to the device **212** for control of the selected device **214**.

In an alternative embodiment involving one or more tasks established as described in conjunction with FIG. **26**, the screen display be "task oriented" instead of device oriented as shown in FIG. **27**. For each selected task, the home automation application configures the screen display of the handheld wireless communication device **110** to implement a menu of the particular home automation commands associated with that particular task. For instance, the user can be presented with a menu of groups that gave been configured. Once a group has been selected, a menu of tasks associated with that group is presented. Once a particular task is selected, the menu presents user options to control the particular actions associated with the selected task.

FIG. **28** presents a pictorial representation of handheld wireless communication device **110** and adjunct device **100** in accordance with an embodiment of the present invention. In particular, handheld wireless communication device **110** includes a wireless telephony transceiver and further includes a wireless telephony application for sending and receiving telephone calls via the wireless telephony transceiver in communication with a wireless telephony network.

The wireless telephony application receives a 911 signal generated by the adjunct device **100** via the communication port of the handheld wireless communication device **110**. In particular, the 911 signal can be generated in response to a user interaction with the user interface **142** of the adjunct device **100**—such as by the user pressing an emergency call button on the adjunct device **100**. In response to the 911 signal from the adjunct device, the wireless telephony application initiates an emergency call, such as a 911 telephone call, or other emergency call. In addition, emergency call can be initiated to a monitoring service as an alternative to a traditional 911 call. In this fashion, a telephone call such as an automated voice call or other call, SMS message, text message, email or other communication can be initiated to alert the service to an emergency or distress situation. The monitoring service can include an eldercare monitoring service that can respond via its own resources to emergency or distress calls. In addition or in the alternative, the monitoring service can itself initiate a 911 call in response to the receipt of the emergency call from the handheld wireless communication device **110**. As will be understood by one skilled in the art, the emergency call, can include location information, such as GPS coordinates or other position information that is relayed to the monitoring service, or the 911 call center to facilitate the location of the handheld wireless communication device **110** that initiated the emergency call.

In this fashion, the user of handheld wireless communication device **110** with adjunct device **100** need only to press a single button on the adjunct device to launch an emergency call, saving time in the event of an actual emergency.

In a further embodiment of the present invention, the handheld wireless communication device **110** can initiate an emergency call in response to the activation of a remote wireless device **120**, for example, by the user pressing an emergency call button on the remote wireless device **120**. In particular, the wireless device **120** transmits a special paging signal, similar to paging signal **16**, that includes data or another indication that an emergency call should be initiated. When the adjunct device **100** receives the special paging signal **100**, the adjunct device communicates the 911 signal to the handheld wireless communication device **100** to initiate the 911 call, as if an emergency call button of the adjunct device **100** had been directly pressed by the user as described above.

As discussed in conjunction with FIG. **5**, the adjunct device **100** can include a device interface **144** that is switchable between an auxiliary power mode and a battery isolation mode. In the battery isolation mode, the device interface **144** decouples the battery **146** from the battery of the handheld wireless communication device **110**, for instance, to preserve the charge of battery **146** for operation even if the battery of the handheld wireless communication device **110** is completely or substantially discharged. In the auxiliary power

mode, the device interface **144** couples the power from the battery **146** to the handheld wireless communication device **110** via the communication port to charge the battery of the handheld wireless communication device **110**. In an embodiment of the present invention, activation of the emergency call feature in the adjunct device **100** can automatically initiate a switch of the device interface **144** to the auxiliary power mode to support emergency calling. In a further embodiment, if the device interface **144** detects a low battery condition during an emergency calling event, the device interface **144** can automatically switch to auxiliary power mode to support emergency calling.

FIG. **29** presents a pictorial representation of handheld wireless communication device **110** and adjunct device **100** in accordance with an embodiment of the present invention. In particular, adjunct device **100** includes a plurality of infrared emitters **240** that emit a corresponding plurality of infrared signals, such as IR location signals **242** for use by a sensor coupled to a screen to generate a screen pointer graphic on the display screen. The adjunct device **100** provides feedback to a video device on the position, orientation and or the perspective of the user and/or to otherwise allow the user to interact with a media application on a remote monitor, television or other display device.

The plurality of infrared emitters **240** can be implemented using IR light emitting diodes that emit light with a wavelength of 880 nM, however, other infrared emitters can likewise be used. The plurality of infrared emitters **240** can be arranged in a row, a grid or other pattern to facilitate a remote device to determine the position, orientation and or the perspective of the handheld wireless communication device **110** and/or by inference, the user of the handheld wireless communication device **110**.

In an embodiment of the present invention, the handheld wireless communication device **110** includes a processor that executes a screen pointer application or other application and wherein the plurality of IR emitters **240** are controlled based on application data from the screen pointer application received by the adjunct device **100** via the communication port of the handheld wireless communication device **110** and device interface **144**. In this fashion, the IR emitters **240** can be selectively enabled or disabled. In addition, the IR emitters can be used in conjunction with other applications such as short-range wireless transceiver **140'**, an infrared data association (IrDA) transceiver or to support other applications of the adjunct device **100** and handheld wireless communication device **110**. While a particular form factor for adjunct device **100** is shown, as previously discussed, adjunct **100** can likewise be implemented as a case that encloses a portion of the handheld wireless communication device **110**.

Further examples of this embodiment, including the interoperability between the adjunct device **100** and a display screen are presented in conjunction with FIG. **30** that follows.

FIG. **30** presents a pictorial representation of screen pointing system in accordance with an embodiment of the present invention. In particular, a handheld device **256**, such as handheld wireless communication device **110** equipped with adjunct device **100** emits IR location signals **242**, that are viewed by video camera **250**. In an embodiment of the present invention, video camera **250** includes a charged coupled device (CCD) array that responds to the infrared location signals **242**. In particular, an infrared sensor such as video camera **250** generates a video signal that includes bright spots corresponding to each of the IR emitters **240**. In an embodiment of the present invention, the video camera **250** includes an infrared filter such as a plastic window injected with an infrared die that allows transmission of infrared light through the window while filtering visible light and other light wavelengths. In this fashion, other light sources can be attenuated providing a clearer video image of the IR emitters **240**.

Video device **254** receives the video signal from video camera **250** and analyzes the video signal to determine the position and/or orientation of the IR emitters **240** in the video image. In response, the video device **254** generates a graphical overlay for display screen **252** of the screen pointer that appears on the display screen **252**. In this fashion, as the position of the handheld device **256** changes, the position of the screen pointer displayed on display screen **252** changes as well. Further, changes of orientation, such as the rotation of the handheld device **256** about roll, pitch or yaw axes can be detected and used to adjust the orientation of the screen pointer.

In an embodiment of the present invention, the video device **254** can include a video game console, computer, set top box, digital video disc player or other video device that operates in conjunction with a display screen **252**. While shown as separate elements, the video camera **250** and/or video device **254** can both be incorporated within a display screen **252**, such as a television or computer monitor.

It should also be noted that, in other embodiments, the positioning of the video camera **250** and the IR emitters **240** can be reversed. In particular, the plurality of IR emitters **242** can be placed above the display screen **252** and the handheld device **256** can include video camera **250**. In the embodiment where handheld device **256** is implemented via handheld wireless communication device **110** and adjunct device **100**, the short-range wireless transceiver **140** of adjunct device **100** or other wireless transceiver of adjunct device **100** or handheld wireless communication device **110** can be used to send the video signal produced by the video camera **250** wirelessly to a complementary wireless transceiver included in video device **254**.

While the foregoing description has focused on a screen pointer application, other applications including the display of three-dimensional video content including 3D movies or video games can also be adapted to the use of position and directional information of a player or viewer. In particular, in presentations with a single player or viewer, the video content displayed on display screen **252** can be transformed based on the position and/or orientation of the handheld device **256** to present the illusion of a three-dimensional display.

For example, the handheld device **256** can be replaced by an alternative device such as glasses, a hat or other object that tracks the position and/or orientation of a user's head. Objects in the background of either a static or dynamic video image can be shifted up when the user's head moves down, and shifted right when a user's head moves left to provide the illusion, via the two-dimensional display screen, that the user is interacting with a three-dimensional virtual world. It should be noted that such an embodiment can be implemented without polarized or colored lenses or other optical filtering used in conjunction with standard three-dimensional programs.

FIG. **31** presents a schematic block diagram of video device **254** in accordance with an embodiment of the present invention. In particular, video device **254** includes pattern recognition module **260**, position/orientation generator **264**, and graphics overlay generator **268**. In operation, video device **254** receives the video signal from video camera **250**. Pattern recognition module **260** analyzes frames of the video image to recognize the line, grid or other pattern of the IR emitters **240** in the frames, based on the bright spots produced by IR location signals **242**.

After the bright spots produced by IR location signals **242** are located, position/orientation sensor **264** generates position and/or orientation signals corresponding to, for instance, x, y, and z-axis translations and roll, pitch and yaw axis orientations of the handheld device **256**. These position and/or orientation signals are presented to graphics overlay generator **268**, that generates a graphic, such as a screen pointer graphic, curser, icon or other graphic corresponding to the position and/or orientation determined by position/orientation generator **264**. In addition, graphics overlay generator **268** overlays the generated graphic on video signal **262** to generate a video output signal to display device **252**. The video input signal can be a locally generated video input signal in embodiments where the video device **254** is a video game console, computer, set top box, digital video disc player or other video device generates its own video signals. In the alternative, video signal **262** can be coupled from an external source such as a video game console, computer, set top box, digital video disc player or other video device that operates in conjunction with a display screen **252**.

The video signal from video camera **250**, video signal **262** and the video output to video display device **252** can each be analog or digital video signals. While not expressly shown, video device **254** can include one or more video decoders, video encoders or video transcoders for converting the video format, frame rate and/or resolution of the video signal from video camera **250**, video signal **262** and the video output to video display device **252** for processing in conjunction with video device **254**.

In the embodiment discussed in conjunction with FIG. **30** where position and orientation information is used to present the illusion of three-dimensions, video device **254** can include a transformation generator in place of graphics overlay generator **268**. In particular, the transformation generator can transform the video signal **262**, based on the position and/or orientation determined by position/orientation generator **264** to present a video output signal that video display device **252** that presents the illusion of three-dimensions, without the need for polarized or colored lenses or other optical filtering.

The components of video device **254** can be implemented using a microprocessor, micro-controller, digital signal processor, microcomputer, central processing unit, field programmable gate array, programmable logic device, state machine, logic circuitry, analog circuitry, digital circuitry, and/or any device that manipulates signals (analog and/or digital) based on operational instructions that are stored in memory. Note that when the components of video device **254** implement one or more functions via a state machine, analog circuitry, digital circuitry, and/or logic circuitry, the memory storing the corresponding operational instructions may be embedded within, or external to, the circuitry comprising the state machine, analog circuitry, digital circuitry, and/or logic circuitry. Video device **254** can include additional components that are not expressly shown.

FIG. **32** presents a schematic block diagram representation of a location system in accordance with an embodiment of the present invention. In particular, a layout is shown of a building that includes a plurality of paging devices **270**, **272**, **274**, **276**, **278** and **280** that have been paired together to form a paging network. Each of the paging devices **270**, **272**, **274** and **276** is a stationary device that is positioned in a fixed location, such as being attached to a wall or ceiling, or placed in another location that is stationary. The paging devices **270**, **272**, **274** and **276** can each be implemented, for instance, via any of the embodiments of wireless device **120**. The paging device **278** is a mobile paging device to be located. In particular, paging device **278** can be implemented via either any of the embodiments of wireless device **120** or adjunct device **100** and handheld wireless communication device **110**.

After these devices have been paired, the mobile paging device **278** can be located as follows. A paging signal, such as paging signal **16** or **112** is transmitted to the paging device **278** by paging device **280**. The paging device **280** can either be a fixed paging device or mobile paging device having a short-range wireless transmitter capable of transmitting such a paging signal—such as any of the embodiments of wireless device **120** or adjunct device **100** and handheld wireless communication device **110**. In an embodiment of the present invention, the paging signal includes a broadcast listen command. The broadcast listen command can, for example, instruct the fixed paging devices **270**, **272**, **274** and/or **276** to beginning listening for a location signal from the device to be located. In response to the paging signal, the mobile paging device **278** generates the location signal, such as location signal **114** or other location signal generated by an adjunct device **100**.

The location signal is received by one or more of the fixed paging devices **270**, **272**, **274** and/or **276**. In response, the fixed paging devices **270**, **272**, **274** and/or **276** that received the location signal generate location information that is transmitted to the paging device **280**. The paging device **280** receives location information pertaining to the mobile paging device **278** via its short-range wireless receiver. In response, the paging device **280** determines a location of the mobile paging device **278** based on the location information.

In an embodiment of the present invention, the location information includes directional information gathered by one or more of the fixed paging devices **270**, **272**, **274** and/or **276** that describe a direction between that fixed paging device and the mobile paging device **278**. When directional information is received by two or more of the fixed paging devices **270**, **272**, **274** and/or **276**, the paging device **280** can triangulate the position of the mobile paging device in two dimensions, based on the directional information.

In an embodiment of the present invention, the fixed paging devices are each implemented via a wireless device **120** that includes an antenna **138**, such as antenna **148'** that is programmable. In this embodiment, wireless device **120** operates in a similar fashion to adjunct device **100** and handheld wireless communication device **110** described in conjunction with FIGS. **7-15** to locate a remote paging device that is transmitting a location signal, such as location signal **112**.

For example, the processing device **131** of a particular fixed paging device **270**, **272**, **274** or **276**, generates control signals **163** to scan a null or lobe of the programmable antenna **148'** over different orientations, determines signal strengths corresponding to the different orientations and determines a direction θ_1, between the particular fixed paging device and the mobile paging device **278**, based on a lowest or highest signal strength M, lowest or highest differential signal strength $D(\theta_1)$, etc. Each such fixed paging device **270**, **272**, **274** or **276** generates directional information that indicates the direction θ_1, and transmits this data to the paging device **280** for analysis. In an embodiment of the present invention, the paging device **280** stores the position of each of the fixed paging devices **270**, **272**, **274** and **276**, and uses this information in conjunction with each of the received directions θ_1, to triangulate the location of the mobile paging device **278**.

In another embodiment of the present invention, the fixed paging devices **270**, **272**, **274** and **276** generate location information that includes signal strength information of the received location signal from mobile paging device **278**. The fixed paging devices **270**, **272**, **274** and **276** transmit this

information to the paging device **280**. In response, the paging device **280** determines which of the fixed devices **270**, **272**, **274** and **276** has the greatest signal strength. In this fashion, the paging device can infer that the mobile paging device **278** is closest to the fixed paging device **270**, **272**, **274** or **276** having the greatest signal strength.

It should be noted that the handheld wireless communication device **110** can include an internal compass that generates an indication of its own orientation. This orientation information can also be used in conjunction with the received directions θ_1, to triangulate the location of the mobile paging device **278** or provide absolute directional information.

The location system of FIG. **32** enables many interesting applications. For example, a restaurant can be equipped with a plurality of fixed paging devices that are paired with a plurality of mobile paging devices and a master console that operates as paging device **280**. When a customer enters the restaurant, he or she is assigned a mobile paging device, such as mobile paging device **278**. The master console can be used to page the mobile paging device when a table is ready. When the customer is assigned a table, the customer continues to use the mobile paging device **278**. For instance, the mobile paging device **278** can be used to initiate pages to the master console to place an order or supplement an existing order, to request a server, etc. In conjunction with these activities, the location system provided by the fixed paging devices can be used to locate the mobile paging device, correlate the location to a table and server, locate a lost paging device, etc.

In other applications, the location system of the present invention can be used in conjunction with the location of persons in hospitals, nursing homes and hospices; the location of files or records in an office building; or the location of boxes or inventory in a warehouse or manufacturing facility or for a host of other applications. In pertinent part, the mobile paging device **278** is constructed with a form factor that can be enclosed in or attached to an object, person or other thing to be located.

It should be noted further that the applications described above can alternatively be implemented without the use of a fixed network of paging devices. A remote wireless device **120** or adjunct device **100** can be associated with each table via a table ID or other data structure. A notebook computer, wireless telephone, iPad device other handheld wireless computing device **110** can be paired with and used to receive pages or other signaling to monitor each of the remote wireless devices **120** and overlay information on a map or other layout of the restaurant's layout. This provides a simpler implementation without the need of a plurality of fixed paging devices. In this case, the table ID provides the location information used to identify the table associated with each mobile device.

It should be specifically noted that the emergency monitoring functionality described in conjunction with FIG. **28** can be combined in the implementations above for applications in a hospital, hospice, nursing home or other care facility. Location and tracking information gathered as described above can be combined with emergency calling to a monitoring center or other emergency messaging to inform a monitoring center of an emergency event and further to provide enhanced location information.

In a further embodiment, accelerometer information from the handheld wireless communication device **110**, such as an iPhone can be used to trigger an emergency call. For example, if a period of inactivity is detected based on a lack of motion over an inactivity period, such as 30, 60, or 90 minutes, a fail-safe distress call can be initiated to the monitoring center to check on the person associated with the device.

While the foregoing description has focused on emergency calling, other automatic calling and alerts can also be implemented in accordance with various implementations of the present invention. In particular, the pairing procedure described in conjunction with FIG. **18** can be expanded to set-up additional options such as those described below.

1) If Sue's phone is not located at home at a particular time (such as when Sue should be home from school in the afternoon), as determined by proximity to one or more fixed paging devices **270**, **272**, **274**, **276**, etc., initiate a text message, email, telephone call or other communication to Mom's phone.
2) If Sue's phone initiates a 911 call, automatically broadcast a paging signal **112** to all remote devices **120**.
3) If Sue's phone initiates any telephone call or text message after 11:00 pm at night, initiate a paging signal to Mom's phone that indicates a call or text message and the destination number.

As discussed in conjunction with FIG. **20**, the RF implementation of short-range wireless transceivers **130'** and **140'** can be used for other uses. In an embodiment of the present invention, distress signals, emergency calling signals and other automatic messages and alerts can be transmitted to a home computer via a Bluetooth or 802.11 connection and relayed indirectly to the handheld wireless communication device **110** via the internet, wireless local area network and/or the long range wireless transceiver of the handheld wireless communication device **110**.

FIG. **33** presents a schematic block diagram of a handheld wireless communication device **300** in accordance with an embodiment of the present invention. While many of the descriptions of the present invention contained herein focus on functions and features ascribed to an adjunct device operating in conjunction with a handheld wireless communication device, the functions and features of the adjunct device handheld wireless communication device combination can be implemented in an enhanced handheld wireless communication device that includes structure and functionality drawn from an adjunct device, such as adjunct devices **100**, **100'**, **101** and **103**. Handheld wireless communication device **300** presents such a device that includes a handheld wireless communication device portion having the standard components of a handheld wireless communication device and an adjunct portion that adds the components necessary to provide the additional functions and features of the adjunct device **100**, **100'**, **101** and **103**. In summary, handheld wireless communication device **300** includes the structure and functionality of any of the embodiments of handheld wireless communication device **110** and adjunct device **100**, **100'**, **101** and **103**, within a single housing, and without the external connections required to couple adjunct device **100**, **100'**, **101** or **103** to handheld wireless communication device **110**.

In particular, handheld wireless communication device **300** includes long range wireless transceiver module **306**, such as a wireless telephony receiver for communicating voice and/or data signals in conjunction with a handheld wireless communication device network, wireless local area network or other wireless network. In addition, handheld wireless communication device **300** includes a user interface **312** that include one or more pushbuttons such as a keypad or other buttons, a touch screen or other display screen, a microphone, speaker, headphone port or other audio port, a thumbwheel, touch pad and/or other user interface device. User interface **312** includes the user interface devices ascribed to handheld wireless communication device **110** and further

provides the functionality and/or structure of the user interface devices **142** described in conjunction with adjunct device **100**, **100'**, **101** and **103**.

Handheld wireless communication device **300** includes a main battery **308** that operates in a similar fashion to the battery of handheld wireless communication device **110**, while a separate battery **146** provides the functions and features described in conjunction with adjunct device **100**, **100'**, **101** and **103**. For example, in isolation mode, battery **146** provides power to the adjunct portions of handheld wireless communication device **300**, while main battery **308** provides power to the wireless telephony portions of the handheld wireless communication device **300**. Device interface **310** functions as device interface **310** without, however, an internal communication port and plug connection between the adjunct device **100** and handheld wireless communication device **110**. Short-range wireless transceiver module **304** includes one or more short-range wireless transceivers such as short-range wireless transceivers **140**, **140'**, **140''**, etc.

The handheld wireless communication device **300** includes a processing module **314** that operates in conjunction with memory **316** to execute a plurality of applications including a wireless telephony application and other general applications of the handheld wireless communication device and other specific applications described in conjunction with the operation of adjunct device **100**, **100'**, **101** and **103** and handheld wireless communication device **110**.

The processing module **314** can be implemented using a microprocessor, micro-controller, digital signal processor, microcomputer, central processing unit, field programmable gate array, programmable logic device, state machine, logic circuitry, analog circuitry, digital circuitry, and/or any device that manipulates signals (analog and/or digital) based on operational instructions that are stored in memory, such as memory **316**. Note that when the processing module **314** implements one or more of its functions via a state machine, analog circuitry, digital circuitry, and/or logic circuitry, the memory storing the corresponding operational instructions may be embedded within, or external to, the circuitry comprising the state machine, analog circuitry, digital circuitry, and/or logic circuitry. Further note that, the memory module **316** stores, and the processing module **314** executes, operational instructions corresponding to at least some of the steps and/or functions illustrated herein.

The memory module **316** may be a single memory device or a plurality of memory devices. Such a memory device may be a read-only memory, random access memory, volatile memory, non-volatile memory, static memory, dynamic memory, flash memory, cache memory, and/or any device that stores digital information. While the components of handheld wireless communication device **300** are shown as being coupled by a particular bus structure, other architectures are likewise possible that include additional data busses and/or direct connectivity between components. Handheld wireless communication device **300** can include additional components that are not expressly shown.

Further, while the present invention has been described in conjunction with a handheld wireless communication device **300** or **110**, it should be noted that the functions and features of the present invention can be implemented in conjunction with an adjunct device coupled to another mobile or stationary computing device capable of executing one or more of the applications described herein in conjunction with handheld wireless communication device **110** or in an another integrated device that includes one or more functions and features of adjunct device **100**, **100'**, **101** and **103** and handheld wireless communication device **110**.

FIG. **34** presents a pictorial representation of a back view of an adjunct device **330** in accordance with an embodiment of the present invention. In particular, adjunct device **330**, such as adjunct device **100**, **100'**, **101** and/or **103**, is implemented as a case for an Apple iPhone, iPod or iTouch device. The case includes a camera hole for the camera of the iPhone, an external device connector **334**, such as communication port **28'** implemented as a micro-USB port. An audio port **336** is included for a beeper, buzzer or other sound emitter included in user interface **142**. IR port **332** is included for coupling to the emitters/detectors of short-range wireless transceiver **140'**, IR emitters **240**, or a video camera that operates in an embodiment of FIGS. **29-30**, where the IR emitters are mounted in association with the display screen **252**.

FIG. **35** presents a pictorial representation of a cutaway side view of an adjunct device **330** in accordance with an embodiment of the present invention. As shown, the adjunct device **330** includes a connector **340**, that operates in a similar fashion to plug **26** to couple the adjunct device **330** to the communication port of the Apple iPhone, iPod or iTouch device. The case is constructed of a flexible plastic or other flexible material so as to be clipped onto the iPhone, iPod or iTouch device, while enclosing the back, sides, top and bottom of the iPhone, iPod or iTouch device, yet leaving open substantially all of the front to allow the user to interact with the touch screen and optionally the front panel button of the device. Internal components **338** include the components of adjunct device **100**, **100'**, **101** and/or **103**. The internal components **338** can include one or more flexible circuit boards to support the flexibility of adjunct device **330**, without damage to the components of adjunct device **330**.

While not expressly shown, the adjunct device **330** includes one or more other ports to provide user access to the headphone jack, power button, speaker and microphone of the iPhone, iPod or iTouch device. While the adjunct device **330** is shown as a case for an Apple iPhone, iPod or iTouch device, similar adjunct devices are possible for use with other handheld wireless communication devices and handheld devices in accordance with the present invention.

FIG. **36** presents a pictorial representation of a front view of a wireless device **325** in accordance with an embodiment of the present invention. In particular, a wireless device **325**, such as wireless device **120**, **122** or **123**, includes a keychain hole **328**. In addition, wireless device **325** includes audio emitter **320**, LED **326** and push button **324** that are included in user interface **132**. Infrared port **320** is coupled to an infrared wireless transceiver, such as short-range wireless transceiver **130'**. While not shown, the wireless device **325** includes a back connector interface for connection to an external charger for charging an internal rechargeable battery.

As previously discussed, the wireless device **325** can be implemented using a ZigBee short-range wireless transceiver that operates in conjunction with the RF4CE standard. When the button is pressed and released on a wireless device **325**, a broadcast message will be sent to all devices in its paging network. Paging commands can use the NLDE-Data request primitive as described in section 3.1.1.1 of the RF4CE specification with the TxOptions: Broadcast, IEEE Address, Acknowledged, Security on, Single Channel, Specify. A broadcast message can optionally be sent from the adjunct **330** as well, or specific items can be paged. If specific items are targeted, then the PairingRef field is specified, and "broadcast" in the TxOptions field is not enabled. The remainder of the data service messaging can proceed as specified in section 3.1.1 of the RF4CE specification.

The wireless device **325** can be paired with similar devices as well as adjunct device **100**, **100'**, **101**, **103** or **330** as set

forth in the RF4CE standard. Two such wireless devices **325** can implement a pairing procedure that includes, for instance, pressing and holding down the pushbuttons **324** or some other button, such as a small recessed button of both devices for at least four seconds. When they are paired with each other, they will both chirp twice via sound emitter **322** and the LED **326** will stop flashing. Pairing can be cleared by pressing and holding the pushbutton for 8 seconds. Clearing can be acknowledged by a single chirp via sound emitter **322** and the flashing of LED **326**. Other compatible devices can be configured for pairing or cleared in a similar fashion, however, the user interface of handheld wireless communication device **110** can optionally be used to assist the pairing process.

In operation, when the pushbutton on one unit is depressed, all the other units in the same paging network can emit a loud alarm via audio emitter **322**, flash a light such as LED **326**, etc. In one example of operation, a user may purchase a wireless device **325** that he puts on his key ring and one in his wallet. If the user misplaces his wallet but has his keys in his pocket, he simply pages his wallet using the key ring wireless device **325**, or vice versa. A very forgetful person may buy one more wireless device **325**, so he had two for the keys and the wallet and one more stuck on the wall next his bed. If both the keys and wallet are lost he pushes the wireless device **325** next to his bed and the buzzer sounds on both items.

In a further example, a mother of five children in a supermarket may put one wireless device **325** in the pocket of each child to retrieve them should they wander off. Wireless device **325** can be programmed to send signals such as periodic beacons or polling signals to determine if all other wireless devices **325** are present in the network. In this fashion, a wireless devices **325** can be programmed to sound an alarm if a child wonders outside of a certain range, based on lack of a response to a poll, low signal power, etc. As previously discussed, the adjunct device **330** can operate as a wireless device **325** in any of the examples discussed above.

As discussed in conjunction with FIGS. **20-23**, wireless device **325** can respond to wireless commands from an adjunct device **330**, to relay infrared commands to other wireless device **325** of other devices to be controlled. So, a user can tape a tag on the inside door of a home entertainment system and control that system from places that are not possible with standard infrared remotes. The system can be used to control multiple TVs or entertainment centers within the same home or across multiple sites based on a user selected group of devices and/or selected tasks including complex tasks based on, for example, GPS position information, time of day, compass direction, distance and other parameters.

As discussed in conjunction with FIGS. **24-27**, a user can replace their existing garage door opener button with a wireless device **325** and control their garage door from their handheld wireless communication device via an adjunct device **330**. Since many smartphones have GPS, this would allow intelligent handheld wireless communication device applications such as automatically opening the garage door as the user drives up. Home lighting can be similarly controlled, where the lights in the house automatically turn off if there is no wireless device **325** or adjunct **330** present in the home.

As previously discussed a wireless device **325** will be able to function as both a pager and IR relay device at the same time. The network topology for IR Relay devices is slightly different, however. Where the paging function was performed among peers, IR relay can operate based on a master-slave relationship between the adjunct device **330** and the wireless device **325**. Multiple adjunct devices **330** can control a single wireless device **325** and one adjunct device **330** can control many wireless devices **325**.

In an example of operation, three wireless devices **325** are set up in various places for IR relay, one in front of the TV, one inside a cabinet in front of the DVD and VCR, and a third on the other side of the room where the CD player sits. Each has its own network for IR relay. Both Mom's iPhone and the teenager's iPhone (via corresponding adjunct devices **330**) can control all three devices. The adjunct devices **330** can initiate data delivery.

To save power, wireless devices **325** may only be awake a small percentage of the time during in a standby mode of operation. For example, a wireless device **325** may typically be awake to transmit and receive a small amount of time every two or more seconds while waiting for a command. The wireless devices **325** can switch itself to an active state when a command or other signaling is received from another device. For instance, following the example discussed above, the adjunct device **330** can send to the target wireless devices **325** the RX-ENABLE.request signal for a reasonable active period such as 5 seconds, to wake up the device and keep it awake for a period of time. After that, the adjunct device **330** can transmit codes such as commands and other control data.

FIG. **37** presents a flowchart representation of a method in accordance with an embodiment of the present invention. In particular, a method is presented for use in conjunction with one or more functions and features described in FIGS. **1-36**. In step **400**, data is generated to present for display on a handheld wireless communication device a graphical user interface that receives an indication of a user to locate at least one personal object and that generates a location signal in response thereto. In step **402**, the location signal is communicated to an adjunct device via the communication port of the handheld wireless communication device to cause the adjunct device to transmit an RF paging signal to at least one remote wireless device via a short-range wireless transceiver of the adjunct device.

In an embodiment of the present invention, the at least one personal object includes a plurality of personal objects and the at least one remote wireless device includes a plurality of remote wireless devices. The graphical user interface can include a menu that indicates the plurality of personal objects. The indication of the user to locate the at least one personal object can include a selected one of the plurality of personal objects. The location signals can indicate a corresponding one of the plurality of remote wireless devices.

The method can also include a pairing procedure for pairing the adjunct device with the plurality of remote wireless devices. The pairing procedure can generate a list that identifies the plurality of remote devices and the plurality of personal objects. The menu that indicates the plurality of personal objects can be generated based on the list.

In an embodiment of the present invention the remote device can generate a location signal in response to the paging signal. The adjunct device can include a directional antenna, coupled to the short-range wireless receiver. The short-range wireless receiver of the adjunct device can generate a signal strength in response to the location signal. The homing application can further include receiving the signal strength via the communication port and the graphical user interface can further generate a signal strength indication to the user. The directional antenna can have a reception pattern that includes a null.

In an embodiment of the present invention, a time of flight can be used instead of or in addition to signal strength to determine the distance to a remote device. In particular, the

time can be measured from the transmission of the paging signal to the reception of the location signal. This time delay (round trip flight time) can indicate the distance to the remote device. The time delay, T_d, can be represented as follows:

$$T_d=T_{f1}+T_{f2}+T_p$$

where, T_p represents the processing time to generate the location signal in response to the paging signal and to recognize the location signal, T_{f1} represents the flight time for the paging signal to travel to the remote device and T_{f2} represents the flight time for the location signal to travel from the remote device to the adjunct device. Considering the processing time T_p to be fixed, the distance to a remote device, D_{ft}, can be approximated based on the following:

$$D_{ft}=c(T_f)=c(T_d-T_p)$$

where is c is a proportionality constant that is based on the speed of light in air and $T_f=(T_{f1}+T_{f2})$.

It should be noted that signal strength and flight time and both be considered in estimating the distance to a remote device. Consider for example, a distance measurement can be expressed as a function f of signal strength, D_{SS}, as follows:

$$D_{ss}=f(\text{RSSI})$$

where RSSI is a received signal strength indication. A final distance measurement D can be determined based on either:

$$D=g(D_{ft},D_{ss}) \text{ or}$$

$$D=h(T_f,\text{RSSI})$$

where g and h are either linear or nonlinear functions. For example, distance can be calculated both ways and averaged to determine a more refined measurement. In a further example, the difference between the two measurements can be used to determine a relative accuracy of the distance estimate.

It should be noted that he functions g or h can be generated to determine distance differently under different conditions. For example, for longer distances determined for instance by either a value of T_f that is above a high flight time threshold and/or a RSSI below a low signal strength threshold, the distance D can be estimated either exclusively based on either T_f or D_{ft} or by predominately weighting the values of T_f or D_{ft} in combination with D_{ft} or RSSI. Further, for midrange distances determined for instance by either a value of T_f that is below a high flight time threshold, but above a low flight time threshold and/or a RSSI above a low signal strength threshold and below a high signal strength threshold, the distance D can be estimated based on a more equal weighting of the values of T_f or D_{ft} in combination with D_{ft} or RSSI. In addition, for shorter distances determined for instance by either a value of T_f that is below a low flight time threshold and/or a RSSI above a high signal strength threshold, the distance D can be estimated either exclusively based on either D_{ft} or RSSI or by predominately weighting the values of D_{ft} or RSSI in combination with T_f or D_{ft}. In this fashion, greater importance can be attributed to high values of RSSI and/or T_f.

FIG. **38** presents a flowchart representation of a method in accordance with an embodiment of the present invention. In particular, a method is presented for use in conjunction with one or more functions and features described in FIGS. **1-37**. In step **410**, data is generated to present for display on the handheld wireless communication device a graphical user interface that receives an indication of a user to control at least one home device and that generates a control signal in response thereto. In step **412**, the control signal is communicated to an adjunct device via the communication port of a handheld wireless communication device to cause the adjunct device to transmit a wireless signal to at least one wireless interface via a short-range wireless transmitter of the adjunct device.

In an embodiment of the present invention, the home devices can include a plurality of home devices, each of the plurality of home devices having a wireless interface. The graphical user interface can include a menu that indicates the plurality of home devices and the indication of the user to control the home device can include a selected one of the plurality of home device. The control signal can indicate a corresponding one of the plurality of home devices.

In an embodiment of the present invention, the remote control application further includes a pairing procedure for pairing the adjunct device with the plurality of home devices. The pairing procedure can generate a list that identifies the plurality of home devices and the menu that indicates the plurality of home devices can be generated, based on the list. Home devices can include a home automation device or a home media device. The short-range wireless transmitter can include an infrared transmitter.

FIG. **39** presents a flowchart representation of a method in accordance with an embodiment of the present invention. In particular, a method is presented for use in conjunction with one or more functions and features described in FIGS. **1-38**. In step **420**, a 911 signal generated by an adjunct device is received via a communication port of the handheld wireless communication device. A 911 call is initiated via the wireless telephony transceiver in response to the 911 signal. As discussed in conjunction with FIG. **28**, the emergency call can include location information, such as GPS coordinates or other position information that is relayed to a monitoring service, or a 911 call center to facilitate the location of the handheld wireless communication device **110** that initiated the emergency call.

FIG. **40** presents a flowchart representation of a method in accordance with an embodiment of the present invention. In particular, a method is presented for use in conjunction with one or more functions and features described in FIGS. **1-39**. In step **430**, a plurality of paging devices are paired to form a paging network, the plurality of paging devices including a plurality of fixed paging devices and the mobile paging device. In step **432**, a paging signal is transmitted to the plurality of paging devices via a short-range wireless transmitter. In step **434**, location information is received via a short-range wireless receiver pertaining to the mobile paging device from at least one of the plurality of fixed paging devices. In step **436**, a location of the mobile paging device is determined based on the location information.

In an embodiment of the present invention, the location information includes directional and distance information between the at least one of the plurality of fixed devices to the at least one mobile device and wherein determining the location of the at least one mobile device includes a triangulation of the directional information. The method can further include receiving a location signal, at the at least one of the plurality of fixed paging devices; scanning a programmable antenna in the at least one of the plurality of fixed paging devices to determine signal strengths corresponding to a plurality of null directions; determining a lowest of the signal strengths; and determining the directional information based on the one of the plurality of null directions corresponding to the lowest of the signal strengths. In this method, the paging signal can be transmitted via a handheld wireless communication device or via an adjunct device coupled to a handheld wireless communication device or other device.

In an embodiment of the present invention, the location information includes signal strength information and step **436**

includes: determining the at least one of the plurality of fixed devices having the greatest signal strength; and determining a proximity to the at least one of the plurality of fixed devices having the greatest signal strength.

As previously discussed, distance can be determined based on a time of flight methodology that looks to round trip signal delay to determine a measure of distance to a remote device.

While the description above has set forth several different modes of operation, the devices described here may simultaneously be in two or more of these modes, unless, by their nature, these modes necessarily cannot be implemented simultaneously. While the foregoing description includes the description of many different embodiments and implementations, the functions and features of these implementations and embodiments can be combined in additional embodiments of the present invention not expressly disclosed by any single implementation or embodiment, yet nevertheless understood by one skilled in the art when presented this disclosure.

As one of ordinary skill in the art will appreciate, the term "substantially" or "approximately", as may be used herein, provides an industry-accepted tolerance to its corresponding term and/or relativity between items. Such an industry-accepted tolerance ranges from less than one percent to twenty percent and corresponds to, but is not limited to, component values, integrated circuit process variations, temperature variations, rise and fall times, and/or thermal noise. Such relativity between items ranges from a difference of a few percent to magnitude differences. As one of ordinary skill in the art will further appreciate, the term "coupled", as may be used herein, includes direct coupling and indirect coupling via another component, element, circuit, or module where, for indirect coupling, the intervening component, element, circuit, or module does not modify the information of a signal but may adjust its current level, voltage level, and/or power level. As one of ordinary skill in the art will also appreciate, inferred coupling (i.e., where one element is coupled to another element by inference) includes direct and indirect coupling between two elements in the same manner as "coupled". As one of ordinary skill in the art will further appreciate, the term "compares favorably", as may be used herein, indicates that a comparison between two or more elements, items, signals, etc., provides a desired relationship. For example, when the desired relationship is that signal **1** has a greater magnitude than signal **2**, a favorable comparison may be achieved when the magnitude of signal **1** is greater than that of signal **2** or when the magnitude of signal **2** is less than that of signal **1**.

In preferred embodiments, the various circuit components are implemented using 0.35 micron or smaller CMOS technology and can include one or more system on a chip integrated circuits that implement any combination of the devices, modules, submodules and other functional components presented herein. Provided however that other circuit technologies including other transistor, diode and resistive logic, both integrated or non-integrated, may be used within the broad scope of the present invention Likewise, various embodiments described herein can also be implemented as software programs running on a computer processor. It should also be noted that the software implementations of the present invention can be stored on a tangible storage medium such as a magnetic or optical disk, read-only memory or random access memory and also be produced as an article of manufacture.

Thus, there has been described herein an apparatus and method, as well as several embodiments including a preferred embodiment. Various embodiments of the present invention herein-described have features that distinguish the present invention from the prior art.

It will be apparent to those skilled in the art that the disclosed invention may be modified in numerous ways and may assume many embodiments other than the preferred forms specifically set out and described above. Accordingly, it is intended by the appended claims to cover all modifications of the invention which fall within the true spirit and scope of the invention.

What is claimed is:

1. A wireless device for locating at least one remote object including a handheld wireless communication device, the wireless device comprising:

a user interface that generates a pairing signal in response to a first indication from a user to pair the wireless device to at least one remote device and generates a first location request signal in response to a second indication from a user to locate the at least one remote device;

a short-range wireless transceiver, coupled to the user interface, that communicates RF signals to pair the wireless device to the at least one remote device and that transmits a first RF paging signal to the at least one remote device in response to the location request signal.

2. The wireless device of claim **1** wherein the at least one remote device includes an adjunct device that is coupleable to the handheld wireless communication device via a communication port of the handheld wireless communication device, and wherein the adjunct device emits a detectable alert signal in response to the first RF paging signal to assist the user in locating the handheld wireless communication device.

3. The wireless device of claim **1** wherein the at least one remote device includes a plurality of remote devices.

4. The wireless device of claim **3** wherein the plurality of remote devices comprise a first paging network wherein each of the plurality of remote devices emits corresponding detectable alert signals in response to the first RF paging signal to assist the user in locating at least one of the plurality of remote devices.

5. The wireless device of claim **3** wherein the plurality of remote devices comprise a plurality of paging networks including:

a first paging network wherein a first subset of the plurality of remote devices emits corresponding first detectable alert signals in response to the first RF paging signal to assist the user in locating at least one of the plurality of remote devices in the first subset of the plurality of remote devices; and

a second paging network wherein a second subset of the plurality of remote devices emits corresponding second detectable alert signals in response to a second RF paging signal generated by the short-range wireless transceiver to assist the user in locating at least one of the plurality of remote devices in the second subset of the plurality of remote devices.

6. The wireless device of claim **3** wherein the user interface generates paging data in response to actions of the user and wherein the first RF paging signal includes the paging data.

7. The wireless device of claim **1** wherein at least one remote device includes the handheld wireless communication device;

wherein the handheld wireless communication device includes a main battery and an adjunct battery that powers an adjunct portion of the handheld wireless communication device; and

wherein the adjunct portion receives the first RF paging signal and emits a detectable alert signal in response to

the first RF paging signal to assist the user in locating the handheld wireless communication device.

8. The wireless device of claim **7** wherein the adjunct portion operates from the adjunct battery to receive the first RF paging signal when the main battery is in a discharged state.

9. A method of locating a mobile paging device, the method comprising:

pairing a plurality of paging devices to form a paging network, the plurality of paging devices including a plurality of fixed paging devices and the mobile paging device;

transmitting a paging signal to the plurality of paging devices via a short-range wireless transmitter;

receiving location information via a short-range wireless receiver pertaining to the mobile paging device from at least one of the plurality of fixed paging devices; and

determining a location of the mobile paging device based on the location information.

10. The method of claim **9** wherein the location information includes directional information between the at least one of the plurality of fixed devices to the at least one mobile device and wherein determining the location of the at least one mobile device includes a triangulation of the directional information.

11. The method of claim **10** further comprising:

receiving a location signal, at the at least one of the plurality of fixed paging devices;

scanning a programmable antenna in the at least one of the plurality of fixed paging devices to determine signal strengths corresponding to a plurality of null directions;

determining a lowest of the signal strengths; and

determining the directional information based on the one of the plurality of null directions corresponding to the lowest of the signal strengths.

12. The method of claim **9** wherein the location information includes round trip signal delay information and wherein determining the location of the at least one mobile device includes:

determining a distance to the at least one mobile device based on the round trip signal delay information.

13. The method of claim **12** wherein determining the distance to the at least one mobile device is further based on an indication of signal strength from signals received from the at least one mobile device.

14. The method of claim **9** wherein the paging signal is transmitted via a handheld wireless communication device.

15. The method of claim **9** wherein the paging signal is transmitted via an adjunct device coupled to a handheld wireless communication device.

16. A fixed paging device for locating a mobile paging device, the fixed paging device comprising:

a user interface that generates a pairing signal in response to an indication from a user to pair the fixed paging device to the mobile paging device;

a short-range wireless transceiver module, coupled to the user interface, that:

communicates RF signals to pair the fixed paging device to the mobile paging device;

receives a first RF paging signal from a remote device;

receives a location signal from the mobile paging device in response to the first RF paging signal;

generates location information in response to the location signal; and

transmits the location signal to the remote device.

17. The fixed paging device of claim **16** wherein the short-range wireless transceiver includes a programmable antenna, and wherein the short-range wireless transceiver generates location information by:

scanning the programmable antenna to determine signal strengths corresponding to a plurality of null directions;

determining a lowest of the signal strengths; and

determining the directional information based on the one of the plurality of null directions corresponding to the lowest of the signal strengths.

18. The fixed paging device of claim **16** wherein the location information includes round trip signal delay information.

19. The fixed paging device of claim **16** wherein the paging signal is transmitted via a handheld wireless communication device.

20. The fixed paging device of claim **16** wherein the paging signal is transmitted via an adjunct device coupled to a handheld wireless communication device.

21. A method of locating a mobile device, the method comprising:

pairing a plurality of devices to form a network, the plurality of devices including the mobile device and at least one adjunct device coupled to a handheld wireless communication device;

receiving location information via a short-range wireless receiver pertaining to the mobile device from at least one of the plurality of devices; and

determining a location of the mobile device based on the location information.

22. The method of claim **21** wherein the location information includes directional information between the at least one of the plurality of devices to the mobile device and wherein determining the location of the mobile device includes a triangulation of the directional information.

23. The method of claim **21** wherein the location information includes round trip signal delay information and wherein determining the location of the mobile device includes:

determining a distance to the mobile device based on the round trip signal delay information.

24. The method of claim **23** wherein determining the distance to the mobile device is further based on an indication of signal strength from signals received from the mobile device.

* * * * *