US 20080320587A1

(19) United States

(12) Patent Application Publication

Vauclair et al.

(10) Pub. No.: US 2008/0320587 A1

(43) Pub. Date: Dec. 25, 2008

(54) **SECURE PAIRING FOR WIRED OR WIRELESS COMMUNICATIONS DEVICES**

(75) Inventors: **Marc Vauclair**, Leuven (BE); **Javier Serret Avila**, Brussels (BE); **Lionel Georges Etienne**, Leuven (BE); **Philippe Teuwen**, Leuven (BE)

Correspondence Address:
PHILIPS INTELLECTUAL PROPERTY & STANDARDS
P.O. BOX 3001
BRIARCLIFF MANOR, NY 10510 (US)

(73) Assignee: **KONINKLIJKE PHILIPS ELECTRONICS, N.V.**, EINDHOVEN (NL)

(21) Appl. No.: **11/574,758**

(22) PCT Filed: **Aug. 31, 2005**

(86) PCT No.: **PCT/IB05/52854**

§ 371 (c)(1), (2), (4) Date: **Mar. 6, 2007**

(30) **Foreign Application Priority Data**

Sep. 8, 2004 (EP) 04104326.6

Publication Classification

(51) **Int. Cl.**
G06F 21/00 (2006.01)

(52) **U.S. Cl.** **726/17**

(57) **ABSTRACT**

Pairing is achieved between a host communications device and a peripheral communications device, in order to establish an ad hoc wireless or wired network. A device identification, relating uniquely to the peripheral device, is displayed on the host device. In order to accept the pairing, the user confirms that th.—device identification displayed on the host device matches that printed on the peripheral diwice, and then completes the pairing procedure by pressing a key on the peripheral device, or, if Near Field Communication (NFC) techniques are implemented in the devices, by placing the peripheral device in contact with, or sufficiently close to, the host device. Thus, secure pairing is achieved, without requiring a complex user interface on the peripheral device.

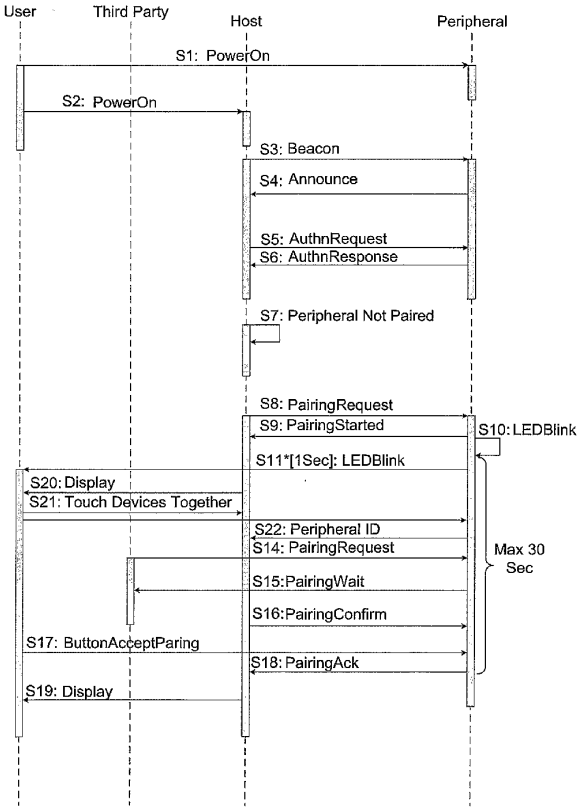

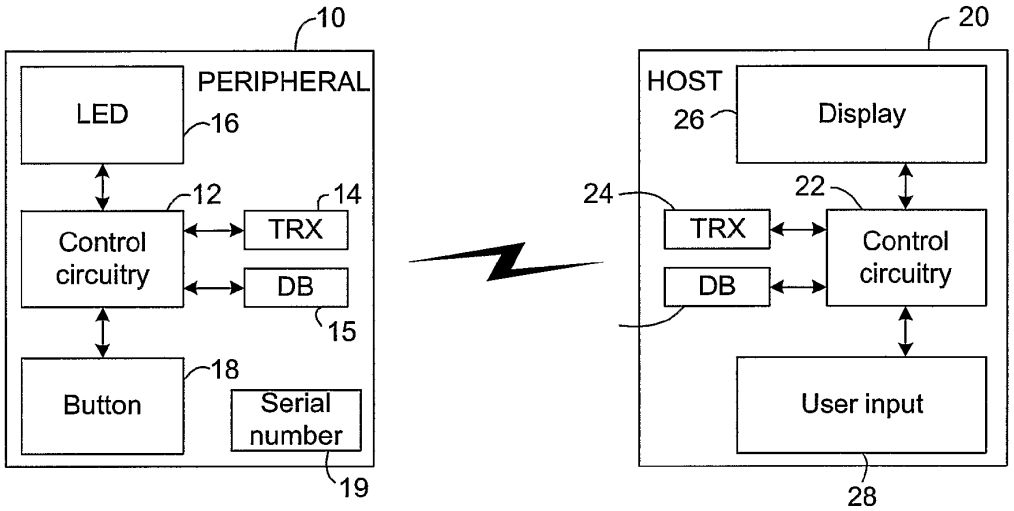
10
PERIPHERAL
LED
16
12
14
Control circuitry
TRX
DB
15
18
Button
Serial number
19
20
HOST
26
Display
24
22
TRX
Control circuitry
DB
User input
28

FIG. 1

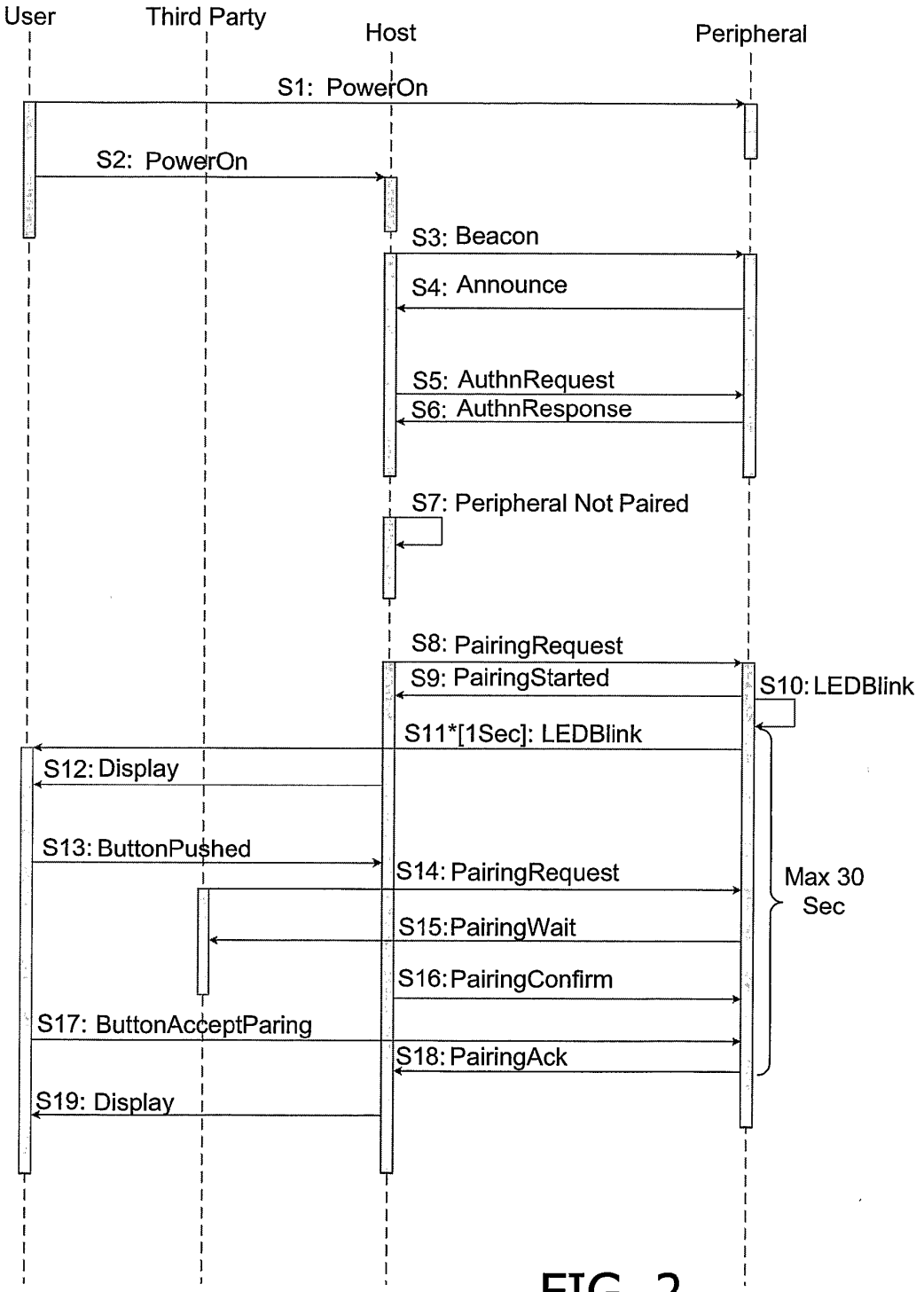
User
Third Party
Host
Peripheral
S1: PowerOn
S2: PowerOn
S3: Beacon
S4: Announce
S5: AuthnRequest
S6: AuthnResponse
S7: Peripheral Not Paired
S8: PairingRequest
S9: PairingStarted
S10: LEDBlink
S11*[1Sec]: LEDBlink
S12: Display
S13: ButtonPushed
S14: PairingRequest
S15:PairingWait
S16:PairingConfirm
S17: ButtonAcceptParing
S18: PairingAck
S19: Display
Max 30 Sec

FIG. 2

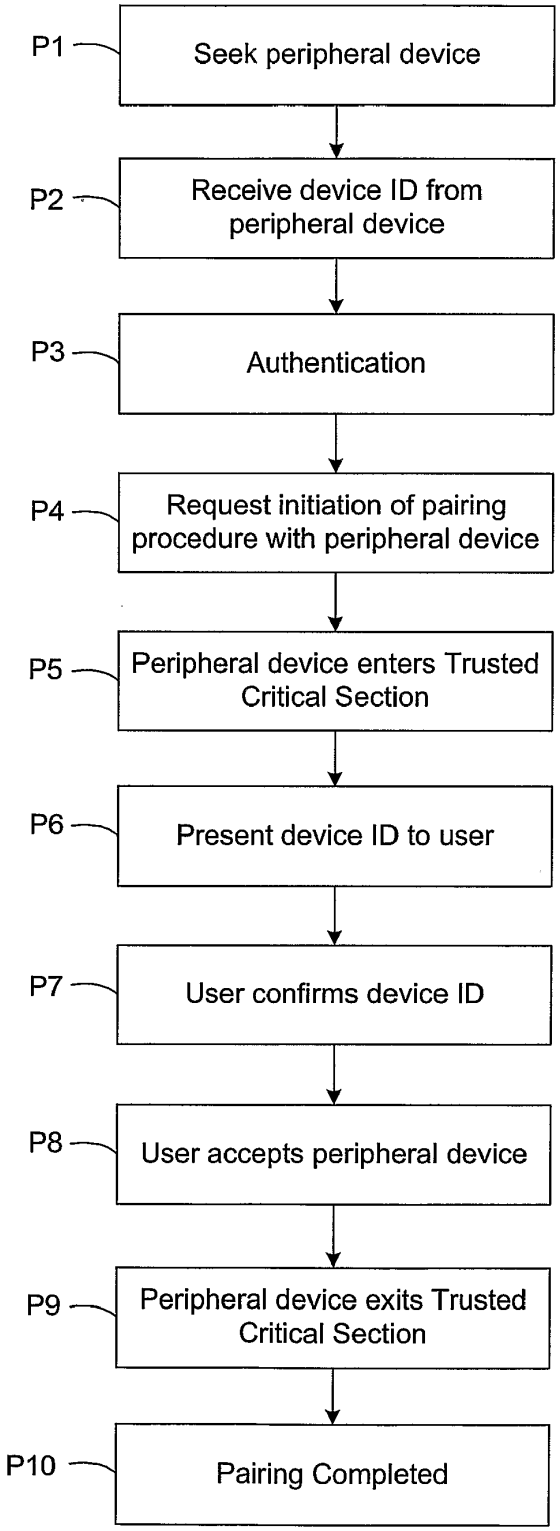
P1
Seek peripheral device
P2
Receive device ID from peripheral device
P3
Authentication
P4
Request initiation of pairing procedure with peripheral device
P5
Peripheral device enters Trusted Critical Section
P6
Present device ID to user
P7
User confirms device ID
P8
User accepts peripheral device
P9
Peripheral device exits Trusted Critical Section
P10
Pairing Completed

FIG. 3

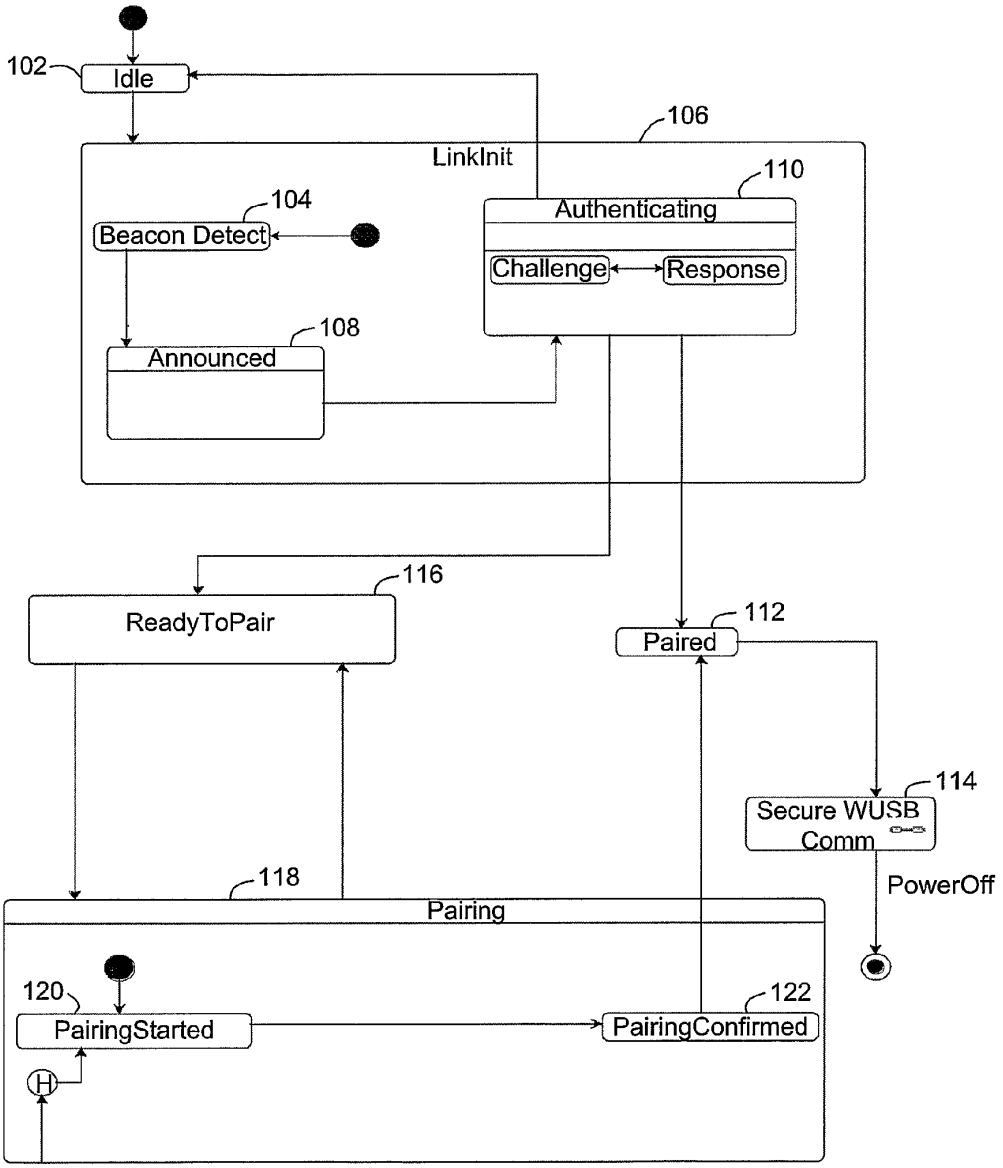
102
Idle
106
LinkInit
110
Authenticating
Challenge
Response
104
Beacon Detect
108
Announced
116
ReadyToPair
112
Paired
114
Secure WUSB Comm
PowerOff
118
Pairing
120
PairingStarted
122
PairingConfirmed
H

FIG. 4

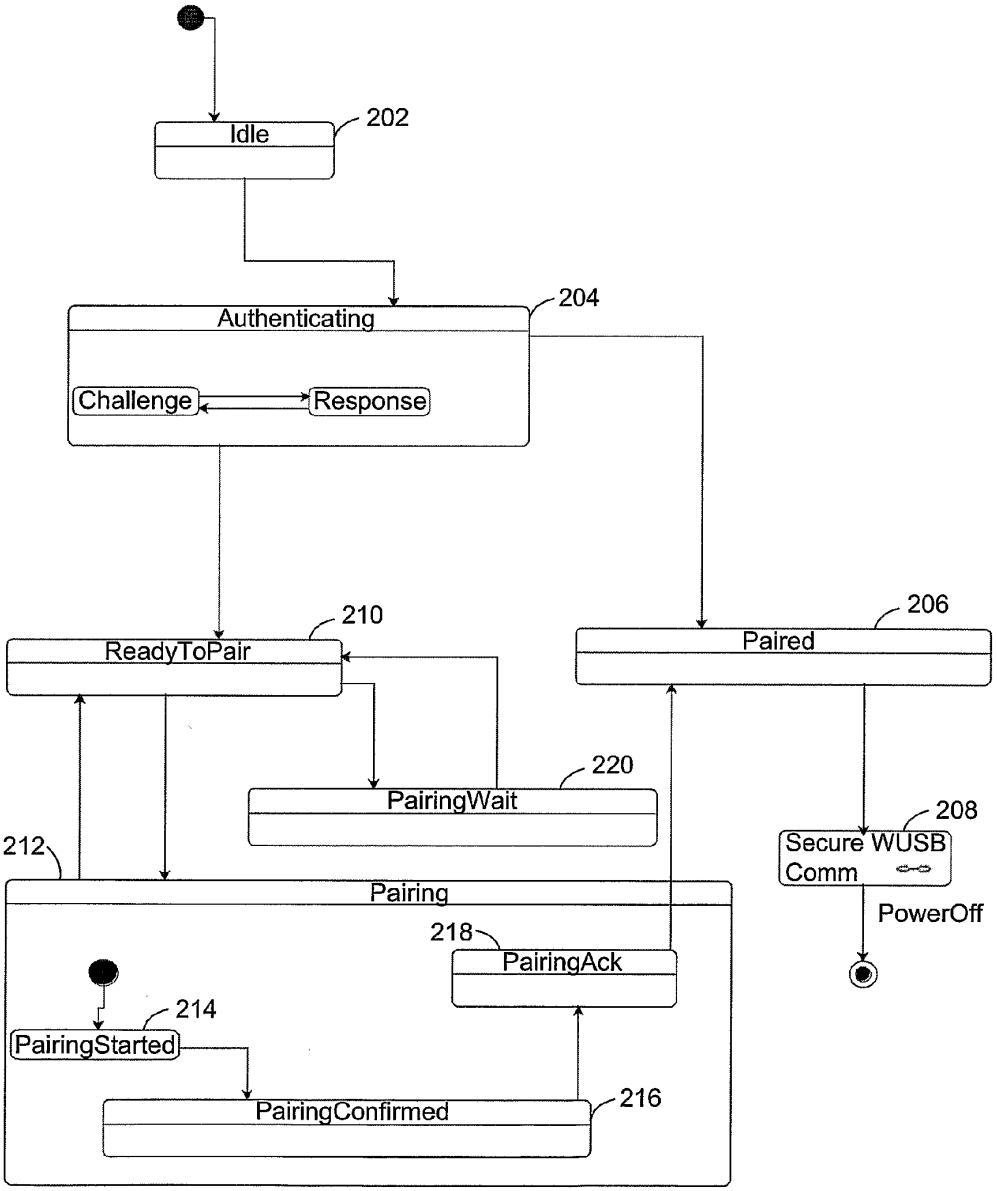
Idle
202
Authenticating
204
Challenge
Response
ReadyToPair
210
Paired
206
PairingWait
220
Secure WUSB Comm
208
PowerOff
212
Pairing
218
PairingAck
PairingStarted
214
PairingConfirmed
216

FIG. 5

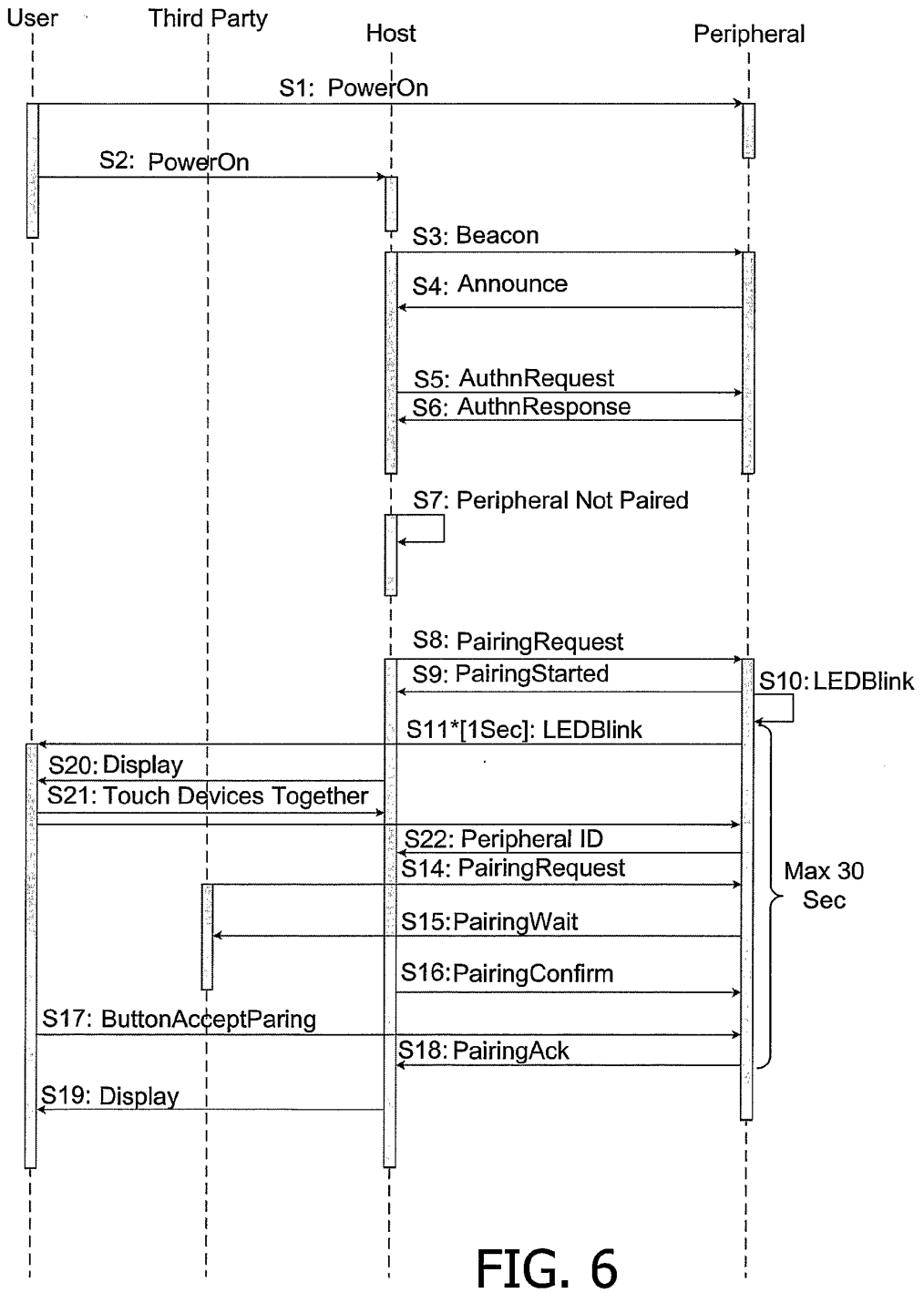
User
Third Party
Host
Peripheral
S1: PowerOn
S2: PowerOn
S3: Beacon
S4: Announce
S5: AuthnRequest
S6: AuthnResponse
S7: Peripheral Not Paired
S8: PairingRequest
S9: PairingStarted
S10: LEDBlink
S11*[1Sec]: LEDBlink
S20: Display
S21: Touch Devices Together
S22: Peripheral ID
S14: PairingRequest
S15: PairingWait
S16: PairingConfirm
S17: ButtonAcceptParing
S18: PairingAck
S19: Display
Max 30 Sec

FIG. 6

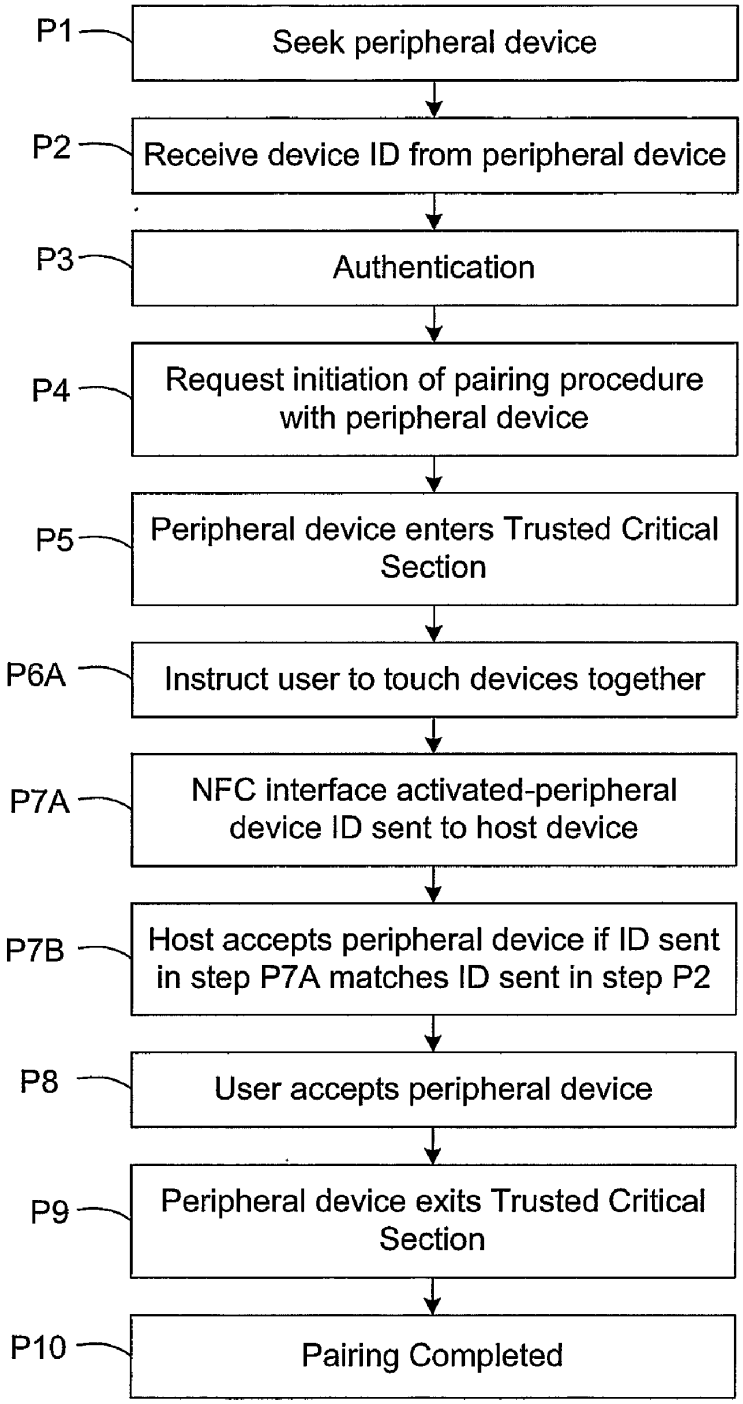
P1
Seek peripheral device
P2
Receive device ID from peripheral device
P3
Authentication
P4
Request initiation of pairing procedure with peripheral device
P5
Peripheral device enters Trusted Critical Section
P6A
Instruct user to touch devices together
P7A
NFC interface activated-peripheral device ID sent to host device
P7B
Host accepts peripheral device if ID sent in step P7A matches ID sent in step P2
P8
User accepts peripheral device
P9
Peripheral device exits Trusted Critical Section
P10
Pairing Completed

FIG. 7

SECURE PAIRING FOR WIRED OR WIRELESS COMMUNICATIONS DEVICES

[0001] The invention relates to wired and wireless communications devices and in particular relates to a method and apparatus for allowing secure pairing of wired or wireless communications devices.

[0002] Ad hoc wireless networks are becoming common, in which suitably equipped wireless devices can communicate with each other wirelessly, avoiding the need to connect the two devices by means of a cable.

[0003] In order for the two separate wireless devices to communicate securely with each other, and avoid the possibility that data transmitted from one of the devices can be detected and/or tampered with by a device owned by a third party, it is necessary to 'pair' the devices. This pairing process involves the communication and establishment of 'trust-foundation' information between the devices involved. This 'trust-foundation' information has the role of ensuring that devices can only communicate with communication peers that the user designates as trusted (for example because the user owns or controls the peer device).

[0004] There are several wireless communication standards, such as Bluetooth and IEEE 802.11b/g, and each contains a mechanism for device pairing. These mechanisms involve either the user typing a series of symbols (for example decimal digits for Bluetooth, hexadecimal or ASCII characters for IEEE 802.11b's Wireless Equivalent Privacy (WEP) protocol) or the use of a secondary communication channel that is already secure or considered secure because of its physical properties (for example Ethernet wires for IEEE 802.11 access points or Near Field Communication (NFC)).

[0005] However, existing pairing mechanisms can be difficult to use, and may increase significantly the requirements placed on the devices, which mean that it is difficult to implement them successfully in commercial products. This means that many deployments are insecure. For example, IEEE 802.11 networks may be implemented without encryption, with the result that communications between two devices can potentially be overheard, and/or tampered with, by third parties. In other cases, a wireless device may be provided with a USB connector for the sole purpose of performing the pairing operations, which increases the cost of the device unnecessarily.

[0006] Many of these disadvantages with pairing mechanisms are also present in wired networks in which the host device is connected directly or indirectly to the peripheral device by cabling or other physical connectors.

[0007] Therefore, there is a need for a method and apparatus for allowing simple, secure pairing of communications devices that does not require the input of symbols nor a secondary secure communication channel.

[0008] According to a first aspect of the invention, there is provided a method of pairing a trusted device and a second device, the method comprising receiving a request to pair the second device with a first device; mutually authenticating the first device and the second device and obtaining from said first device a device identification relating to said first device; putting the first device into a trusted mode in which it will not engage in a pairing procedure with any device other than the second device; obtaining a device identification from the trusted device; comparing the device identification from the trusted device with the device identification obtained in the authenticating step; if the device identification relating to the first device matches the device identification obtained from the trusted device, determining that the first device is the trusted device and sending a pairing acceptance to the trusted device; and pairing the trusted device and the second device in response to the receipt of a second pairing acceptance from a user entered into the trusted device.

[0009] According to a second aspect of the present invention, there is provided a peripheral communications device, comprising means for authenticating the peripheral device to a host device, and transmitting a peripheral device identification to said host device; means for authenticating the said host device to the peripheral device, and receiving said host device identification; means for putting the peripheral device into a trusted mode in which it will not engage in a pairing procedure with any device other than said host device; means for receiving a pairing acceptance input from a user and for confirming pairing with said host device in response to the pairing acceptance input.

[0010] According to a third aspect of the present invention, there is provided a host communications device, comprising means for receiving a request to pair said host device with a peripheral device; means for authenticating the peripheral device and obtaining from said peripheral device a device identification relating to said peripheral device; means for authenticating to the peripheral device and transmitting a host device identification to said peripheral device; means for displaying the device identification relating to said peripheral device; and means for pairing the host and peripheral communications devices in response to the receipt of a pairing confirmation from the peripheral device and a host pairing acceptance from the user entered into the host device.

[0011] According to a fourth aspect of the invention, there is provided a host communications device, comprising means for receiving a request to pair said host device with a peripheral device; means for authenticating the peripheral device and obtaining from said peripheral device a device identification relating to said peripheral device; means for authenticating to the peripheral device and transmitting a host device identification to said peripheral device; means for obtaining a device identification relating to a trusted device; and means for comparing the device identification relating to the peripheral device and the device identification relating to the trusted device; means for pairing the host and peripheral devices in the event that the device identification relating to the peripheral device and the device identification relating to the trusted device match, and in response to the receipt of a pairing confirmation from the peripheral device.

[0012] The invention therefore allows device pairing to be performed simply by the user, without requiring significant increases in the manufacturing costs of devices, in particular those devices that are built for applications that would not otherwise require a feature-rich user interface (e.g. a wireless USB "memory key"). As a result, the invention provides a method and apparatus, which allow pairing of relatively inexpensive devices in a straightforward manner. The level of security that is in fact implemented in wireless and wired networks is therefore likely to be increased.

[0013] FIG. **1** is a block schematic diagram of an ad hoc wireless communications network, including wireless communications devices in accordance with an aspect of the present invention.

[0014] FIG. **2** illustrates a method performed in the network of FIG. **1**, according to a second aspect of the present invention.

[0015] FIG. **3** is a flow chart, further illustrating the method of FIG. **2**.

[0016] FIG. **4** is a state diagram, illustrating the operation of one of the devices in the network of FIG. **1**.

[0017] FIG. **5** is a further state diagram, illustrating the operation of the other of the devices in the network of FIG. **1**.

[0018] FIG. **6** illustrates a method performed in the network of FIG. **1** according to an alternative embodiment of the invention.

[0019] FIG. **7** is a flow chart, further illustrating the method of FIG. **6**.

[0020] Although the invention will be described herein as being implemented in wireless networks, it will be appreciated that the invention can also be applied to wired networks in which the host device is connected directly or indirectly to the peripheral device by cabling or other physical connectors.

[0021] FIG. **1** is a block schematic diagram, showing two electronic devices **10**, **20**, which have a wireless connection, such that they form an ad hoc wireless network.

[0022] In this illustrated embodiment of the invention, the first electronic device **10** is regarded as a peripheral device, while the second electronic device **20** is regarded as a host device. For example, the first electronic device **10** may be a portable memory device, a mobile telephone handsfree kit or a wireless network access point (such as a Wi-Fi Access Point), while the second electronic device **20** may be a camera, mobile telephone or personal computer, and the ad hoc wireless network is formed to allow data to be transferred from the first device **10** to the second device **20**. In this case, the ad hoc wireless network is formed by allowing the first device **10** and the second device **20** to communicate according to the Wireless USB (Universal Serial Bus) (WUSB) protocol. However, the first and second devices could communicate according to any wireless or wired protocol, for example such as the IEEE 802.15 and the IEEE 802.11 standard series, Bluetooth, Zigbee, Ethernet or IP.

[0023] It will be appreciated that the first and second electronic devices are each potentially complex, and so, for ease of understanding, they will be described here only so far as is necessary for an understanding of the present invention, that is, for an understanding of the method by which the devices are paired to allow secure communications between them.

[0024] The peripheral first electronic device **10** has control circuitry **12**, in the form of a suitably programmed processor. The control circuitry **12** has other features required for the performance of the primary function of the device **10**, but only those features relating to the establishment of device pairing will be described here. The control circuitry **12** is connected to transceiver (TRX) circuitry **14**, which handles radio frequency communications with other electronic devices able to use the same wireless protocol.

[0025] The control circuitry **12** is also connected to a database (DB) **15**, which stores information about devices with which the device **10** has been paired.

[0026] Since the first electronic device is relatively simple to operate, it is not provided with a complex user interface. Instead, it is provided with an LED **16**, which operates under the control of the control circuitry **12**, and a single button **18**, which can be pressed by the user to send a signal to the control circuitry **12**.

[0027] A serial number **19**, which uniquely identifies the first electronic device **10**, is written on the outside of the device in a user-readable form.

[0028] The host second electronic device **20** has control circuitry **22**, in the form of a suitably programmed processor. The control circuitry **22** has other features required for the performance of the primary function of the device **20**, but only those features relating to the establishment of device pairing will be described here. The control circuitry **22** is connected to transceiver (TRX) circuitry **24**, which handles radio frequency communications with other electronic devices able to use the same wireless protocol.

[0029] The control circuitry **22** is also connected to a database (DB) **25**, which stores information about devices with which the device **20** has been paired.

[0030] Since the second electronic device is much more complex than the first, it is provided with a more complex user interface. In this illustrated example, it is provided with a display **26**, which operates under the control of the control circuitry **22**, and can for example display detailed messages, or menu options, to the user. The second electronic device is also provided with user input **28**, which may for example include a keypad, and one or more scroll buttons, allowing the user to select from available menu options, to send a signal to the control circuitry **22**.

[0031] In the embodiments of the invention illustrated in FIGS. **2** to **7**, the user would like to pair the "trusted" host device **20** with a "trusted" peripheral device **10**. The host and peripheral devices are considered to be "trusted" if, for example, the user owns the host or peripheral device, and these are the devices that the user wishes to pair together. A third party device that is in range of the host device **20** is therefore not considered to be a "trusted" device.

[0032] Briefly, the methods illustrated in FIGS. **2** to **7** provide a means for pairing a first communications device **10** (a peripheral device) and a second communications device **20** (a host device). Firstly, a mutual authentication is performed between the second device and a first device. At this stage, it is possible that the first device with which the second device is communicating is not the first device owned by the user (i.e. it is not the "trusted" device).

[0033] Therefore, the methods according to the various embodiments of the invention provide a means by which the user can verify that the first device with which the second device is communicating is indeed the "trusted" device and vice versa. In addition, these methods are robust to various types of attack.

[0034] The process of pairing the first and second electronic devices **10**, **20** according to a first embodiment of the invention will now be described with reference to FIG. **2**, which shows the signals sent between the devices, FIG. **3**, which shows the procedure performed in the host device **20**, FIG. **4**, which shows the state of the peripheral device **10**, and FIG. **5**, which shows the state of the host device **20**.

[0035] As shown in FIG. **2**, the pairing process may start when the first and second electronic devices **10**, **20** have each been powered on (steps S**1** and S**2** respectively in FIG. **2**). Each of the devices then enters its respective Idle state **102**, **202**.

[0036] When the user wishes to establish an ad hoc wireless network between the first and second electronic devices **10**, **20**, for example in order to be able to transfer data between the two devices, he operates the host device **20** as required in

order to control this process. For example, to initiate the process, the user may select a pairing option from a menu, using the user input **28**.

[0037] In step P**1** of the process in FIG. **3**, the host device **20** then seeks a nearby peripheral device. Specifically, it does this by sending a beacon signal (S**3** in FIG. **2**) containing its identification.

[0038] The peripheral device **10** detects the beacon signal, and enters a Beacon Detect sub-state **104** of its Link Initialization state **106**. The peripheral device **10** then replies with an announcement (S**4** in FIG. **2**) containing its identification, and enters its Announced sub-state **108**.

[0039] The host device **20** receives the peripheral device identification in step P**2** of the process in FIG. **3**, and then passes to step P**3**, in which a mutual authentication procedure is performed.

[0040] In this illustrated embodiment of the invention, the mutual authentication procedure is a generally conventional cryptographic authentication procedure, based on the use of "public key" cryptography. The first and second devices **10**, **20** enter their respective Authenticating states **110**, **204**. The host device **20** sends an unpredictable challenge (S**5** in FIG. **2**) to the peripheral device **10**. Then the peripheral device **10** processes the challenge by leveraging the knowledge of a private key to generate a response (S**6** in FIG. **2**), that also includes its own public key information. Finally, the host device verifies the correctness of the response with the conveyed public key uniquely associated to the private key of the peripheral device.

[0041] The challenge-response (S**5** and S**6** in FIG. **2**) message interchange is then repeated, with the roles of the host and peripheral devices inverted, to achieve a mutual authentication. It is well known in the art how to piggyback challenges and responses issued by the two devices, in order to minimize the number of messages interchanged, for example according to the STS (Station to Station) protocol, the SSL (Secure Socket Layer) protocol or SSH (Secure Shell) protocol.

[0042] It will be appreciated by a person skilled in the art that various different protocols or algorithms can be used to mutually authenticate the devices. Examples of protocols that can be used include EAP-TTLS, EAP-PEAP, STS, Diffie-Hellman or EC/DH. Examples of algorithms that can be used include RSA, DSA or ECDSA.

[0043] As is known, device identifications can be associated to public keys by three main techniques. One possibility is to use certificates issued by a trusted authority that binds these two values together (e.g. X509). Another possibility is to perform a cryptographic digest (e.g. SHA-1) of the public key to directly obtain the device identification. A third possibility is to perform a cryptographic digest (e.g. SHA-1) of a document (e.g. X509 certificate) containing the public key.

[0044] In this case, the peripheral device **10** associates its printed serial number **19** to its public key when authenticating with the host device **20**.

[0045] It is also known in the art that the transmitted device identifications can be the result of a random process, for example they can be generated using a random (or pseudo random) number, such that the random process will only generate the same device identification twice with negligible probability.

[0046] As a by-product of the authentication procedure, the host device **20** and peripheral device **10** generate a common secret key, that is used to secure all subsequent message interchanges between them.

[0047] Once the authentication procedure has been performed, the first and second devices **10**, **20** check in their respective paired device databases **15**, **25** whether they are in fact already paired with the respective other device. If so, the first and second devices **10**, **20** enter their respective Paired states **112**, **206**, and they are then able to perform secure wireless (or wired) communications (states **114**, **208**), until such time as one or both of them is powered off.

[0048] If, on the other hand, the first and second devices determine that they are not already paired with the respective other device (S**7** in FIG. **2**), the first and second devices **10**, **20** enter their respective Ready to Pair states **116**, **210**.

[0049] In step P**4** of the process shown in FIG. **3**, the host device **20** requests the initiation of a pairing procedure with the peripheral device **10**. Specifically, it sends a pairing request signal (S**8** in FIG. **2**) to the peripheral device, and the first and second devices **10**, **20** enter their respective Pairing states **118**, **212**. The peripheral device **10** then returns a pairing started signal (S**9** in FIG. **2**) to the host device **20**, and the first and second devices **10**, **20** enter their respective Pairing Started states **120**, **214**.

[0050] In this illustrated embodiment of the invention, the LED **16** on the peripheral device **10** then starts to blink, to indicate to the user that pairing is in process (S**10** and S**11** in FIG. **2**). Other simple signaling mechanisms are also possible. At this stage (step P**5** in the procedure of FIG. **3**), the peripheral device **10** enters a state referred to herein as a "Trusted Critical Section". In the Trusted Critical Section, the first trusted device is guaranteed to communicate only with a specific second device for the purpose of pairing.

[0051] In step P**6** of the process shown in FIG. **3**, the host device **20** presents to the user the identification of the peripheral device **10**. Specifically, it displays on the display **26** (S**12** in FIG. **2**) the identification of the peripheral device. In this illustrated embodiment of the invention, the identification uniquely identifies the peripheral device **10**. However, in other embodiments of the invention, the identification could simply identify the peripheral device such that it becomes highly improbable that any other nearby peripheral device could share that identification. For example, the identification can be the result of a hash function performed on the public key of the peripheral device **10**.

[0052] In this illustrated embodiment of the invention, all that is then required is for the user to compare the device identification **19** physically written on the first device **10** and the device identification displayed on the display **26** of the second device **20**, in order to confirm (step P**7** in FIG. **3**) that the two identifications match. If so, the user accepts the presented device identification (step P**8** in FIG. **3**), for example by pressing an "OK" key on the user input **28** on the host device **20** (S**13** in FIG. **2**).

[0053] If, for example at this stage, the peripheral device **10** receives a second pairing request signal (S**14** in FIG. **2**) from a third party's host device, it returns a pairing wait signal (S**15** in FIG. **2**), and the pairing with the third party's device does not continue.

[0054] Otherwise, the host **20** then sends a pairing confirm signal (S**16** in FIG. **2**) to the peripheral device **10**, and presents on its display **26** a message to the user indicating that he can accept the pairing (S**17** in FIG. **2**) by pressing the button

18 on the first device **10**. No further typing of passwords or complicated sequences of symbols will be then necessary. The first and second devices **10**, **20** then enter their respective Pairing Confirmed states **122**, **216**.

[0055] The peripheral device **10** then sends a pairing acknowledge signal (S**18** in FIG. **2**) to the host **20**, which enters its Pairing Acknowledged state **218**, while the peripheral device **10** exits the Trusted Critical Section (step P**9** in the procedure of FIG. **3**), and the LED **16** stops blinking.

[0056] In step P**10** of the process shown in FIG. **3**, the pairing procedure is completed, and the first and second devices **10**, **20** then enter their respective Paired states **112**, **206**, and the host device **20** confirms on its display **26** that it is paired with the peripheral device **10** (S**19** in FIG. **2**). Finally, each of the devices **10**, **20** stores the identifier of the other device in its respective paired devices database **15**, **25**.

[0057] As shown in FIG. **2**, a timer starts when the first device **10** enters its Pairing Started state **120**. If pairing is not completed within a set time period (30 seconds in this case), the first device **10** returns to its Ready to Pair **116**, and notifies the second device **20** with a PairingWait message. Upon reception of this message, the second device **20** notifies the user of the condition by means of a message on its display **26**, and returns to its Ready to Pair state **210** once the time specified in the PairingWait message (for example 30 seconds) has elapsed.

[0058] The security of this pairing protocol thus arises because the user trusts the first device (e.g. because he owns it), and the user trusts the second device (e.g. because he owns it). The result is that the second device does not lie to the user, the first device does not lie to the user, and, in particular, the first device does not lie to the second device.

[0059] In an alternative embodiment of the invention, the first electronic device **10** and second electronic device **20** include additional circuitry, separate to the transceiver circuitry **14** and **24** respectively, for allowing communication between the devices over a short-range radio link. This short-range radio link uses a different protocol to the protocol used for the main transmissions between the devices. One such protocol that could be used by this circuitry is that proposed in the Near Field Communication (NFC) Interface and Protocol (NFCIP-1) by ECMA that transmits at 13.56 MHz. In a further alternative embodiment, the second electronic device **20** includes additional circuitry, separate to the transceiver circuitry **24**, for allowing communication with an NFC token (for example an RFID tag) in the first electronic device **10**.

[0060] FIGS. **6** and **7** illustrate a method performed in accordance with the alternative embodiment of the invention. Steps S**1** to S**11** in FIG. **6** and steps P**1** to P**5** in FIG. **7** are as described above in relation to FIGS. **2** and **3**.

[0061] After step S**11** in FIG. **6** and step P**5** in FIG. **7**, the first device **10** is in the "Trusted Critical Section" state, in which it is guaranteed to engage in a pairing procedure with only one second device at a time.

[0062] In step P**6**A of the process shown in FIG. **7**, the host device **20** presents the user with an instruction to initiate communications between the devices using the alternative protocol. Specifically, if the protocol is an NFC protocol, the device **20** displays on the display **26** (S**20** in FIG. **3**) an instruction to touch the host device **20** to the trusted peripheral device **10** (i.e. the peripheral device possessed by the user). Alternatively, the host device **20** can be brought sufficiently close to the trusted peripheral device **10** to initiate communications using the NFC protocol.

[0063] Once the user has touched the devices or moved the devices sufficiently close together (S**21** in FIG. **6** and P**7**A in FIG. **7**), the NFC interface is activated, and the identification of the peripheral device **10** (which was also provided to the second device in step P**2** if the first device **10** is indeed the trusted peripheral device) is transmitted to the second device **20** (step S**22**). This transmission takes place without any interaction by the user, other than touching or moving the two devices together. In the further alternative embodiment, the NFC interface is activated, the signal activates the NFC token which communicates the peripheral device identification to the second device **20**.

[0064] In this embodiment of the invention, the identification uniquely identifies the peripheral device **10**. However, in other embodiments of the invention, the identification could simply identify the peripheral device such that it becomes highly improbable that any other nearby peripheral device could share that identification. For example, the identification can be the result of a hash function performed on the public key of the peripheral device **10**.

[0065] In this illustrated embodiment of the invention, the second device **20** compares the device identification received in step S**22** and P**7**A with the device identification received from the first device in step P**2**, in order to confirm (step P**7**B in FIG. **7**) that the two identifications match.

[0066] If, for example at this stage, the peripheral device **10** receives a second pairing request signal (S**14** in FIG. **6**) from a third party's host device, it returns a pairing wait signal (S**15** in FIG. **6**), and the pairing with the third party's device does not continue.

[0067] Otherwise, if the second device **20** determines that the identifications do match, then the second device **20** accepts the first device **10** (step P**7**B in FIG. **7**), and transmits a pairing confirm signal (S**16** in FIG. **6**) to the peripheral device **10**, and presents on its display **26** a message to the user indicating that he can accept the pairing (S**17** in FIG. **6**) by pressing the button **18** on the first device **10** (step P**8** in FIG. **7**). No typing of passwords or complicated sequences of symbols is necessary. The first and second devices **10**, **20** then enter their respective Pairing Confirmed states **122**, **216**.

[0068] The peripheral device **10** then sends a pairing acknowledge signal (S**18** in FIG. **6**) to the host **20**, which enters its Pairing Acknowledged state **218**, while the peripheral device **10** exits the Trusted Critical Section (step P**9** in the procedure of FIG. **7**), and the LED **16** stops blinking.

[0069] In step P**10** of the process shown in FIG. **7**, the pairing procedure is completed, and the first and second devices **10**, **20** then enter their respective Paired states **112**, **206**, and the host device **20** confirms on its display **26** that it is paired with the peripheral device **10** (S**19** in FIG. **6**). Finally, each of the devices **10**, **20** stores the identifier of the other device in its respective paired devices database **15**, **25**.

[0070] As with the first embodiment of the invention, a timer starts when the first device **10** enters its Pairing Started state **120**. If pairing is not completed within a set time period (30 seconds in this case), the first device **10** returns to its Ready to Pair **116**, and notifies the second device **20** with a PairingWait message. Upon reception of this message, the second device **20** notifies the user of the condition by means of a message on its display **26**, and returns to its Ready to Pair state **210** once the time specified in the PairingWait message (for example 30 seconds) has elapsed.

[0071] In order to illustrate the security of the pairing procedure, the reaction of the system to various attempts to attack the procedure will be considered.

[0072] In a first possible attack, a third party has a peripheral device of the same type as the user's peripheral device **10**. If the third party's peripheral device responds to the beacon signal (S**3** in FIG. **2**) with its own announcement, and then successfully authenticates with the host device **20**, the result would be that, in the first embodiment of the invention at step P**6** in the procedure of FIG. **3**, it would be the device identification of the third party's peripheral device that would be presented on the display **26** of the host device **20**. The user would then be able to reject the proposed pairing, for example by pressing a "NO" key on the user input **28** of the second device **20**.

[0073] Thus, although it authenticates the third party's device, the user's host device **20** will not lie to the user and so it will present a device identification that does not match the device identification printed on the user's peripheral device **10** (the "trusted" device). Therefore, the user has all the information required to discover the attack and refuse the pairing.

[0074] In the alternative embodiment of the invention where the devices use NFC or another short-range radio link, the result of carrying out step P**6**A in FIG. **7** will be that the identification of the user's peripheral device **10** will be sent to the host device **20**. This identification will then be compared with the identification received from the third party's peripheral device in the announce step (S**4** in FIG. **6**). The host device **20** will determine that the identifications do not match, and will refuse the pairing.

[0075] In a second possible attack, a third party has a host device, which may or may not be of the same type as the user's host device **20**. At a time when the peripheral device **10** is in its Ready to Pair state **210**, but before the pairing request (S**8** in FIG. **2** or FIG. **6**) is sent from the user's host device **20**, the third party's host device initiates the pairing procedure with the peripheral device. In response, the LED **16** of the peripheral device **10** starts blinking, as described above. However, the user's host device **20** can determine that a third party's device is now pairing with the peripheral device, and can indicate this on its display **26**, in order to warn the user. Meanwhile, it enters its Pairing Wait state **220**. Since the user does not know about this third party's device, he does not press the button **18** on the peripheral device, but instead waits for the LED **16** to stop blinking. When the LED **16** stops blinking, the third party's device is put into "quarantine" by the peripheral device for some time, and the pairing procedure with the user's host device **20** can resume.

[0076] Thus, when the user's peripheral device **10** enters the Trusted Critical Section, it will inform the user's host device **20** that it is not available for pairing at that moment by replying with a pairing wait signal, in response to the pairing request signal S**8**. This is guaranteed because of the trust flow described above. This will allow the user's host device **20** to list the peripheral device **10** on its display **26**, while warning the user that the peripheral device **10** is now pairing with a third party's device. Therefore, again, the user has all the information required to discover the condition and refuse the pairing with the third party's device.

[0077] In a third possible attack, a third party has a host device, which may or may not be of the same type as the user's host device **20**. At a time when the peripheral device **10** is in its Pairing state **212**, the third party seeks the user's peripheral device and instructs his own host device to start the pairing process. As described above, the peripheral device **10** receives a second pairing request signal (S**14** in FIGS. **2** and **6**) from the third party's host device, and returns a pairing wait signal (S**15** in FIGS. **2** and **6**) in order to refuse the third party's pairing request, and the pairing with the third party's device does not continue.

[0078] Thus, these attacks can be rejected, regardless of the exact implementation of the third party's devices.

[0079] In order to ensure that the user knows the procedure to follow, in order to prevent a successful attack on the pairing procedure, suitable instructions are provided to the user on the display **26** of the second device **20**, such that the user is instructed to manipulate the trusted peripheral device **10** only in response to instructions from the second device **20**.

[0080] In a further embodiment of the invention, the functionality of the host device described above can be split between two paired devices, a delegator device and a delegatee device, such that the delegator device and delegates device together act as a single host for purposes of pairing the delegator device to a peripheral device.

[0081] In this embodiment, the delegator device delegates the responsibility for conducting the pairing procedure between itself and the peripheral device to the delegates device with which the delegator device is already paired. This delegation may be implemented using the RADIUS protocol.

[0082] There is thus provided a pairing procedure, which allows secure pairing of two devices, even when one of the devices has the simplest possible user interface, for example with only a single LED as a display, and a single button for user inputs.

1. A method of pairing a trusted device and a second device, the method comprising:

receiving a request to pair the second device with a first device;

mutually authenticating the first device and the second device and obtaining from said first device a device identification relating to said first device;

putting the first device into a trusted mode in which it will not engage in a pairing procedure with any device other than the second device;

obtaining a device identification from the trusted device;

comparing the device identification from the trusted device with the device identification obtained in the authenticating step;

if the device identification relating to the first device matches the device identification obtained from the trusted device, determining that the first device is the trusted device and sending a pairing acceptance to the trusted device; and

pairing the trusted device and the second device in response to the receipt of a second pairing acceptance from a user entered into the trusted device.

2. A method as claimed in claim **1**, wherein the step of obtaining a device identification from the trusted device comprises a user reading a device identification printed on the trusted device; and wherein the step of comparing comprises a user visually comparing the device identification relating to the first device that is displayed on said second device and said device identification printed on the trusted device.

3. A method as claimed in claim **1**, wherein the step of obtaining a device identification from the trusted device comprises:

activating a short range radio link between the trusted device and the second device; and

transmitting the device identification of the trusted device to the second device.

4. A method as claimed in claim **3**, wherein the step of activating the short range radio link comprises physically touching the second device to the trusted device.

5. A method as claimed in claim **3**, wherein the step of activating the short range radio link comprises moving the second device close to the trusted device.

6. A method as claimed in claim **3**, wherein the short range radio link uses a Near Field Communication protocol.

7. A method as claimed in claim **3**, wherein the device identification of the trusted device is stored in a RFID tag.

8. A method as claimed in claim **1**, wherein the first and second devices:

establish a common secret key after or during the mutual authentication;

use the shared common secret key to ensure the authenticity and sequencing of subsequent messages between the first and second devices.

9. A method as claimed in claim **1**, wherein the second pairing acceptance comprises a single keypress on the trusted device.

10. A method as claimed in claim **1**, further comprising, after putting the first device into the trusted mode, notifying the second device that the first device will pair exclusively with the second device while first device is in the trusted mode.

11. A method as claimed in claim **1**, the method comprising:

in response to receiving said request to pair the first and second devices, transmitting a beacon signal from said second device, wherein said beacon signal indicates the identification of said second device; and

in response to receiving said beacon signal from said second device, transmitting a response signal from said first device.

12. A method as claimed in claim **11**, wherein the identification of said second device in said beacon signal is unique.

13. A method as claimed in claim **11**, comprising generating said identification of said second device by means of a random process.

14. A method as claimed in claim **13**, wherein said random process will only generate the same identification of said second device twice with negligible probability.

15. A method as claimed in claim **12**, wherein said unique identification of said second device can be directly computed from the said second device authentication.

16. A method as claimed in claim **1**, the method comprising after authenticating said first device, indicating on said first device that said first device is in a pairing procedure.

17. A method as claimed in claim **16**, comprising indicating on said first device that said first device is in a pairing procedure, by means of a light on said first device.

18. A method as claimed in claim **1**, wherein said device identification uniquely identifies said first device.

19. A method as claimed in claim **18**, comprising generating said identification of said first device by means of a random process.

20. A method as claimed in claim **19**, wherein said random process will only generate the same identification of said first device twice with negligible probability.

21. A method as claimed in claim **18**, wherein said device identification can be directly computed from the said first device authentication.

22. A method as claimed in claim **1**, further comprising establishing a secure ad hoc wireless communications network between said first and second devices.

23. A method as claimed in claim **22**, comprising establishing a wireless USB connection between said first and second devices.

24. A peripheral communications device, comprising:

means for authenticating the peripheral device to a host device, and transmitting a peripheral device identification to said host device;

means for authenticating the said host device to the peripheral device, and receiving said host device identification;

means for putting the peripheral device into a trusted mode in which it will not engage in a pairing procedure with any device other than said host device;

means for receiving a pairing acceptance input from a user and for confirming pairing with said host device in response to the pairing acceptance input.

25. A peripheral device as claimed in claim **24**, wherein the device further comprises a second means for transmitting the peripheral device identification to the host device, the second means using a short range radio link.

26. A peripheral device as claimed in claim **25**, wherein the short range radio link uses a Near Field Communication protocol.

27. A peripheral device as claimed in claim **25**, wherein the second means comprises a RFID tag.

28. A peripheral device as claimed in claim **24**, wherein said peripheral device further comprises:

means for establishing a common secret key with said host device after or during the authentication with the said host device;

means for producing messages with the said secret key whose authenticity, integrity and sequencing can be verified by the said host device;

means for verifying the authenticity, integrity and sequencing of the messages produced by the host device with the said secret key;

29. A peripheral device as claimed in claim **24**, wherein said peripheral device identification uniquely identifies said peripheral device.

30. A peripheral device as claimed in claim **24**, wherein said peripheral device identification is a result of a random process.

31. A peripheral device as claimed in claim **30**, wherein said random process will only generate the same peripheral device identification twice with negligible probability.

32. A peripheral device as claimed in claim **24**, the device comprising means for receiving a beacon signal from said host device, and transmitting a response signal.

33. A peripheral device as claimed in claim **24**, the device comprising means for indicating that said first device is in a pairing procedure, after completing said authentication.

34. A peripheral device as claimed in claim **33**, wherein said means for indicating comprises a light on said peripheral device.

35. A peripheral device as claimed in claim **24**, adapted for establishing a wireless USB connection with said host device.

36. A peripheral device as claimed in claim **24**, adapted for establishing an Internet Protocol connection with said host device.

37. A peripheral device as claimed in claim **24**, wherein the pairing acceptance input from a user comprises a single keypress.

38. A host communications device, comprising:

means for receiving a request to pair said host device with a peripheral device;

means for authenticating the peripheral device and obtaining from said peripheral device a device identification relating to said peripheral device;

means for authenticating to the peripheral device and transmitting a host device identification to said peripheral device;

means for displaying the device identification relating to said peripheral device; and

means for pairing the host and peripheral communications devices in response to the receipt of a pairing confirmation from the peripheral device and a host pairing acceptance from the user entered into the host device.

39. A host communications device, comprising:

means for receiving a request to pair said host device with a peripheral device;

means for authenticating the peripheral device and obtaining from said peripheral device a device identification relating to said peripheral device;

means for authenticating to the peripheral device and transmitting a host device identification to said peripheral device;

means for obtaining a device identification relating to a trusted device; and

means for comparing the device identification relating to the peripheral device and the device identification relating to the trusted device;

means for pairing the host and peripheral devices in the event that the device identification relating to the peripheral device and the device identification relating to the trusted device match, and in response to the receipt of a pairing confirmation from the peripheral device.

40. A host device as claimed in claim **38**, wherein the means for obtaining comprises a means for establishing a short range radio link with the peripheral device.

41. A host device as claimed in claim **40**, wherein the short range radio link uses a Near Field Communication protocol.

42. A host device as claimed in claim **38**, wherein said host device further comprises:

means for establishing a common secret key with said peripheral device after or during the authentication with the said peripheral device;

means for producing messages with the said secret key whose authenticity, integrity and sequencing can be verified by the said peripheral device;

means for verifying the authenticity, integrity and sequencing of the messages produces by the peripheral device with the said secret key.

43. A host device as claimed in claim **38**, wherein in response to receiving said request to pair the host and peripheral devices, said host device is adapted to transmit a beacon signal, wherein said beacon signal indicates the identification of said host device.

44. A host device as claimed in claim **38**, wherein said device identification uniquely identifies said peripheral device.

45. A host device as claimed in claim **38**, wherein said peripheral device identification is a result of a random process.

46. A host device as claimed in claim **45**, wherein said random process will only generate the same peripheral device identification twice with negligible probability.

47. A host device as claimed in claim **38**, wherein said host device identification uniquely identifies said host device.

48. A host device as claimed in claim **38**, adapted for establishing a secure wireless USB connection with said peripheral device.

49. A host device as claimed in claim **38**, adapted for establishing an Internet Protocol connection with said peripheral device.

50. A host device as claimed in claim **38**, wherein the host device comprises a delegator device and a delegatee device, wherein the delegator device is adapted to forward a request to pair said host device with a peripheral device to the delegatee device, and wherein the delegatee device is adapted to perform at least a part of the pairing procedure on behalf of the delegator device.

* * * * *