US008043177B2

(12) **United States Patent**
Flanagan

(10) **Patent No.: US 8,043,177 B2**
(45) **Date of Patent: Oct. 25, 2011**

(54) **ARROWHEAD HAVING COLLAPSIBLE AND OUTWARDLY BIASED BLADES**

(76) Inventor: **Edward Flanagan**, Oakley, MI (US)

(*) Notice: Subject to any disclaimer, the term of this patent is extended or adjusted under 35 U.S.C. 154(b) by 630 days.

(21) Appl. No.: **12/168,189**

(22) Filed: **Jul. 7, 2008**

(65) **Prior Publication Data**

US 2010/0004078 A1 Jan. 7, 2010

(51) **Int. Cl.**
F42B 6/08 (2006.01)

(52) **U.S. Cl.** **473/583**

(58) **Field of Classification Search** 473/582, 473/583, 584

See application file for complete search history.

(56) **References Cited**

U.S. PATENT DOCUMENTS

3,036,395 A * 5/1962 Erlo 43/6
3,036,396 A 5/1962 Swails
4,099,720 A 7/1978 Zeren
4,973,060 A * 11/1990 Herzing 473/583
5,879,252 A 3/1999 Johnson
6,270,435 B1 8/2001 Sodaro
6,287,224 B1 9/2001 Liechty, II
6,554,727 B1 * 4/2003 Armstrong et al. 473/584
6,758,774 B2 7/2004 Liechty, II
6,793,596 B1 9/2004 Sullivan et al.
6,830,523 B1 12/2004 Kuhn
7,311,622 B1 12/2007 Futtere
7,713,152 B1 * 5/2010 Tentler et al. 473/583

* cited by examiner

Primary Examiner — John Ricci
(74) *Attorney, Agent, or Firm* — Gifford, Krass, Sprinkle, Anderson & Citkowski, P.C.; Douglas L. Wathen

(57) **ABSTRACT**

A broadhead for an arrow has a ferrule and a pair of blade members. Each blade member has a first end that is pivotally interconnected with the ferrule body and an opposite second end. The blade members each have a retracted position and an extended position. A biasing member biases the blade members toward the extended positions and is the only element operable to hold the blade members in the extended position.

17 Claims, 4 Drawing Sheets

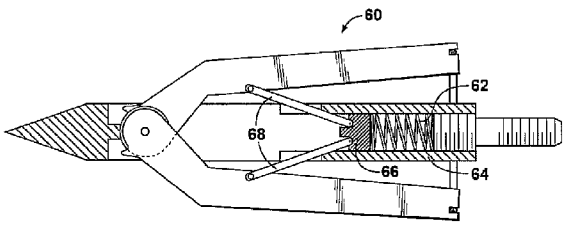

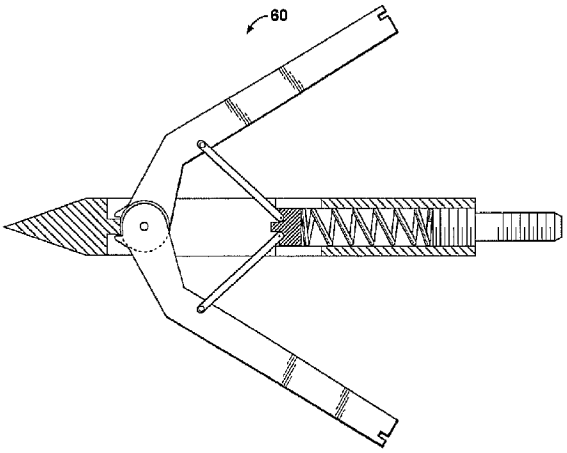

Bowmar Archery, Ex. 1001

FIG - 1

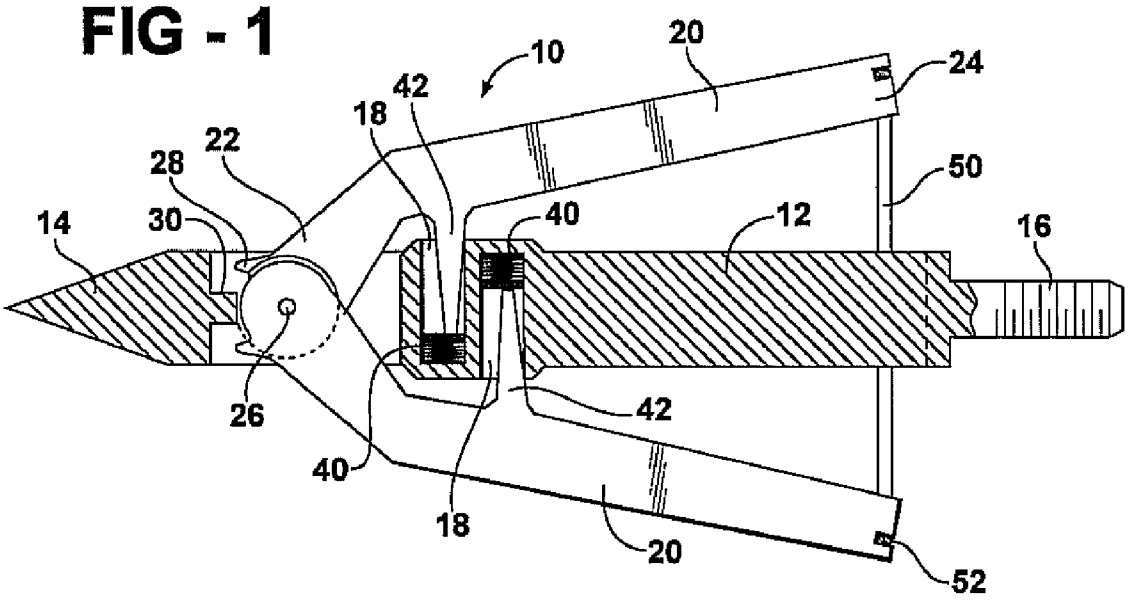

FIG - 2

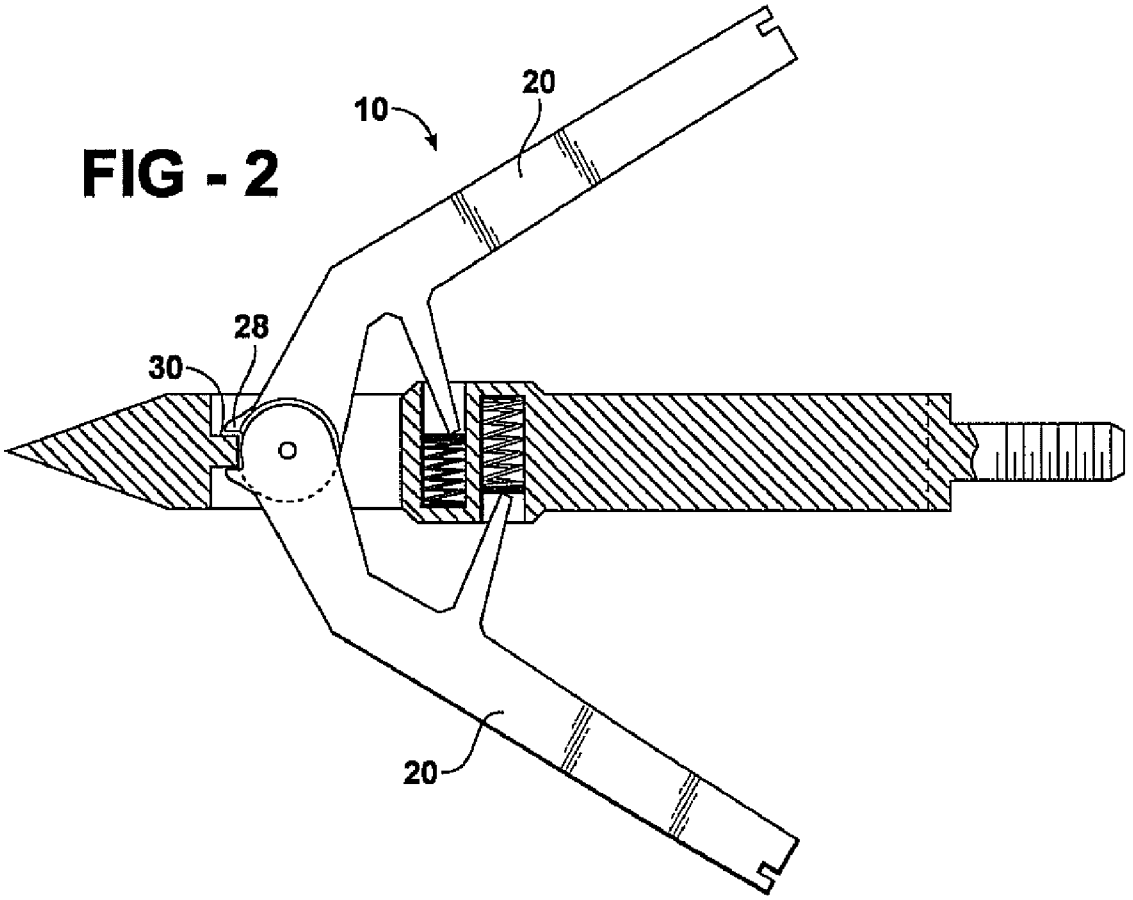

FIG - 3

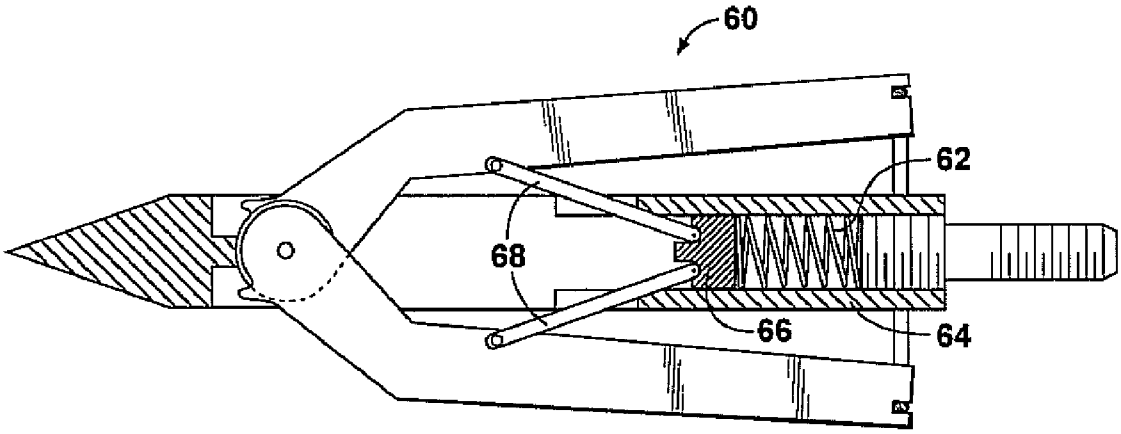

FIG - 4

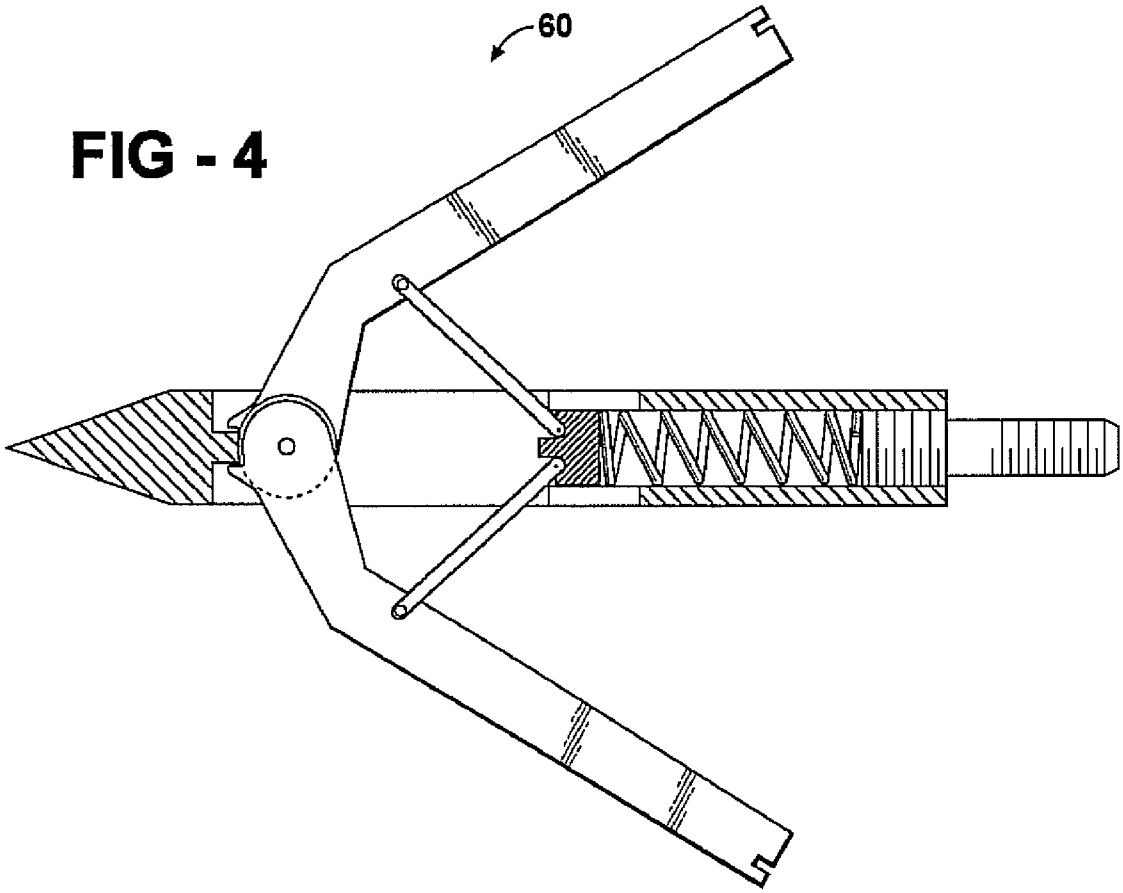

FIG - 5

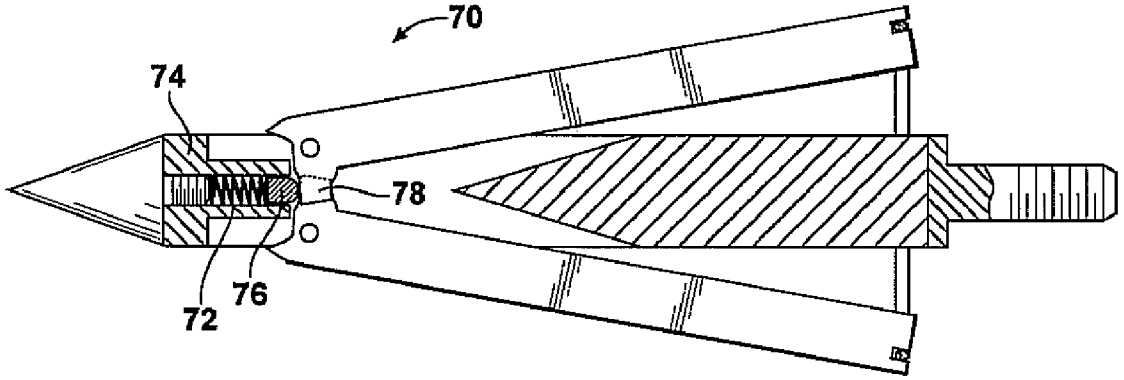

FIG - 6

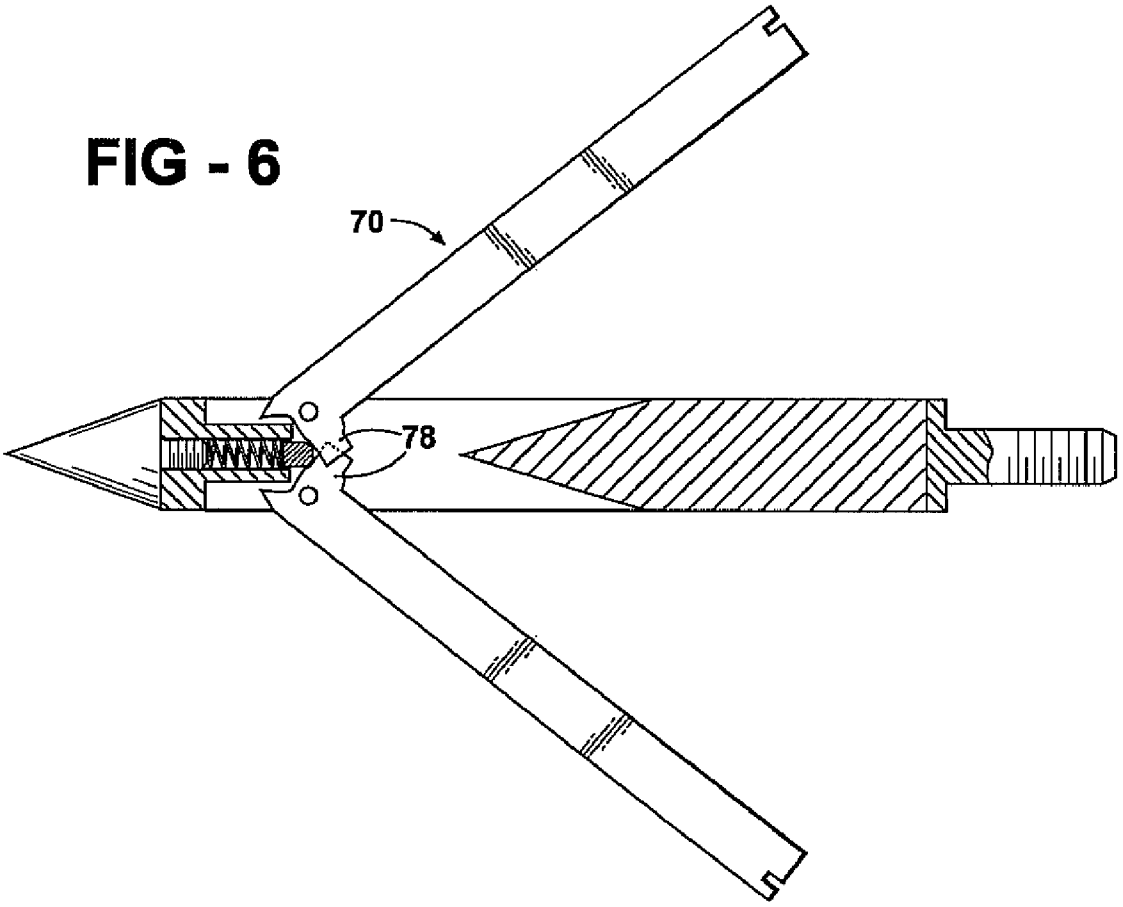

FIG - 7

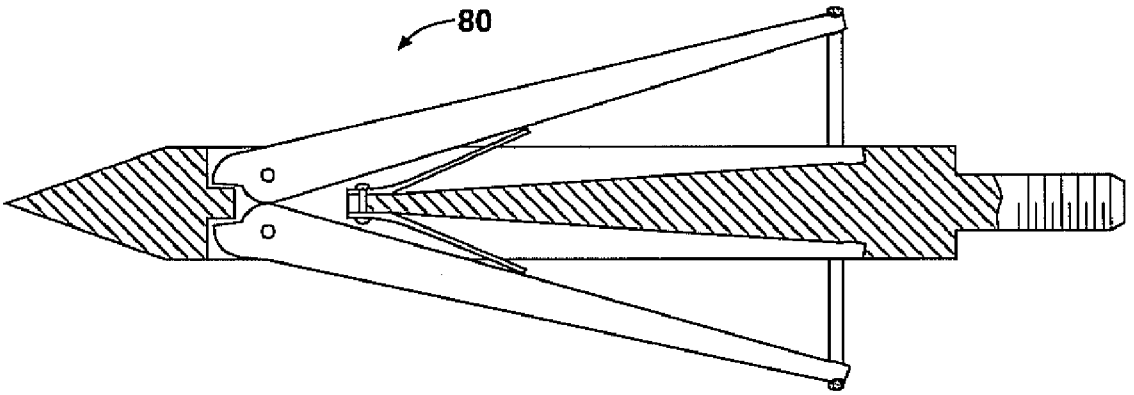

FIG - 8

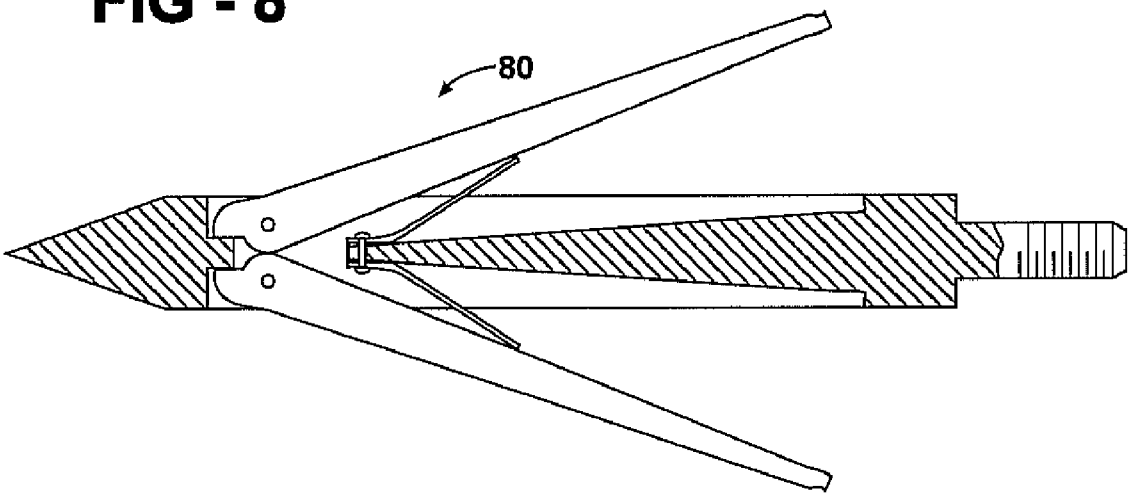

ARROWHEAD HAVING COLLAPSIBLE AND OUTWARDLY BIASED BLADES

FIELD OF THE INVENTION

The invention relates to arrowheads and, more particularly, to arrowheads with blade members that are collapsible to allow the arrow to pass through bone and outwardly biased to increase the amount of flesh cut by the blade members after passing through the bone.

BACKGROUND OF THE INVENTION

Many hunters attempt to shoot an animal through the shoulder blade in hopes that the arrow will pass therethrough and penetrate the animal's heart and/or lungs. This results in a fast kill and minimizes the amount of suffering experienced by the animal. Conventional blade designs are known, which purport to penetrate flesh and pass cleanly through bone to continue penetrating flesh on the other side. Yet, in use in the field, it is widely known that these designs do not reliably ensure clean penetration of the bone. In many instances, conventional arrowhead designs gets stuck in the bone, which results in an animal that is wounded but not mortally wounded. Such an animal may suffer and/or run away to escape capture by the hunter.

Thus, it remains desirable to provide an improved arrow and arrowhead design that provides reliable penetration of bone and maximizes cutting of soft flesh on either side of the bone to increase the likelihood of a successful kill and minimize undue suffering of the animal.

SUMMARY OF THE INVENTION

According to one embodiment of the invention, a broadhead for an arrow with a shaft includes a ferrule and first and second blade members. The ferrule has a rearward end configured for attachment to the shaft of the arrow and an opposite forward end with a ferrule body extending therebetween. The first blade member has a first end pivotally interconnected with the ferrule body and an opposite second end. The first blade member has a retracted position wherein the second end is spaced from the ferrule body at a first distance and an extended position wherein the second end is spaced from the ferrule body by a distance which is greater than the first distance. The second blade member has a first end pivotally interconnected with the ferrule body and an opposite second end. The first blade number has a retracted position wherein the second end is spaced from the ferrule body at a first distance and an extended position wherein the second end is spaced from the ferrule body by a distance which is greater than the first distance. The broadhead also includes at least one biasing member for biasing the first and second blade members towards the extended positions. The biasing member is the only element operable to hold the blade members in the extended position.

In some versions, the pivotal interconnection between the first blade member and the ferrule body is at a fixed position relative to the ferrule body and the pivotal interconnection between the second blade member and the ferrule body is at a fixed position relative to the ferrule body. In some versions, the pivotal interconnections are each substantially equidistant from the forward end of the ferrule.

According to another embodiment of the invention, a broadhead has a ferrule, a pair of blade members and at least one biasing member. The ferrule has a rearward end configured for attachment to the shaft of an arrow and an opposite forward end with the ferrule body extending therebetween.

The first blade member has a forward end pivotally interconnected with the ferrule body and an opposite rearward end. The first blade member has a retracted position wherein the rearward end is spaced from the ferrule body at a first distance and an extended position wherein the rearward end is spaced from the ferrule body by a second distance which is greater than the first distance. The pivotal interconnection between the first blade member and the ferrule body is at a fixed position relative to the ferrule body. The second blade member has a forward end pivotally interconnected with the ferrule body and a rearward end. The second blade member has a retracted position wherein the rearward end is spaced from the ferrule body at a first distance and an extended position wherein the rearward end is spaced from the ferrule body by a distance which is greater than the first distance. The pivotal interconnection between the second blade member and the ferrule body is at a fixed position relative to the ferrule body. The biasing member biases the first and second blade members towards the extended positions.

BRIEF DESCRIPTION OF THE DRAWINGS

Advantages of the present invention will be readily appreciated as the same becomes better understood by reference to the following detailed description when considered in connection with the accompanying drawings, wherein:

FIG. **1** is a cross sectional side view of a broadhead according to a first embodiment of the present invention with the blade members in a retracted position;

FIG. **2** is a view similar to FIG. **1** with the blade members in an extended position;

FIG. **3** is a cross sectional side view of a broadhead according to a second embodiment of the present invention with the blade members in a retracted position;

FIG. **4** is a view similar to FIG. **3** with the blade members in an extended position;

FIG. **5** is a cross sectional side view of a broadhead according to a third embodiment of the present invention with the blade members in a retracted position;

FIG. **6** is a view similar to FIG. **5** with the blade members in an extended position;

FIG. **7** is a cross sectional side view of a broadhead according to a fourth embodiment of the present invention with the blade members in a retracted position; and

FIG. **8** is a view similar to FIG. **8** with the blade members in an extended position;

DETAILED DESCRIPTION OF THE INVENTION

Referring to FIGS. **1** and **2**, an arrowhead according to one embodiment of the invention is generally indicated at **10**. This type of arrowhead is generally referred to as a broadhead. The arrowhead **10** includes a generally cylindrical body or ferrule **12**. A pointed tip **14** is formed at the forward end of the ferrule **12** and an attachment portion **16** is formed at the rearward end of the ferrule **12**. The portion between the ends may be called a ferrule body.

The arrowhead **10** includes at least one blade member **20** movably coupled to the ferrule **12** for movement between a retracted position, as shown in FIG. **1**, and an extended position, as shown in FIG. **2**. Preferably, blade members **20** are provided in generally symmetrically opposite pairs, e.g. two or four blade members spaced equidistantly in a rotational sense about the ferrule **12**, though an odd number is also possible. A front end **22** of each blade member **20** is movably coupled to the ferrule **12** nearer to the tip **14** than the attach-

ment portion **16**. In the retracted position, the length of the blade member **20** is disposed along side of or adjacent to the ferrule **12**. In the extended position, the blade member **20** is generally rotated forwardly so that a rear end **24** of the blade member **20** is spaced apart from the ferrule **12**. In the retracted position, the rear end **24** of the blade member may be said to be spaced from the ferrule **12** by a first distance and in the extended position the rear end **24** may be said to spaced from the ferrule by a distance greater than the first distance.

In the illustrated embodiment, the front end **22** of the blade member **20** is pivotally coupled to the ferrule **12** for movement about a fixed pivot **26** between the retracted and extended positions. A tab **28** extends outwardly from the front end **22** of each blade member **20** and contacts an abutting surface **30** on the ferrule to limit outward travel for the blade member **20** and define the extended position of the blade member **20**. Alternatively, the travel limit provided by the tab **28** and abutting surface **30** may be provided in other ways, or there may not be a travel limit. Also, any position of the blade members **20** wherein the rear ends **24** are spaced from the ferrule by a distance greater than the first distance may be considered to be the extended position even if the travel limit is not reached.

It should be appreciated that the front end **22** of the blade members **20** may be coupled to the ferrule **12** near the tip **14** by other arrangements, such as by a pivot pin pivotally and/or slidably coupled in a slot. The pin and slot may be provided interchangeably on the ferrule and blade member. It should also be appreciated that FIGS. **1** and **2** are cross sectional views and the forward ends of the blade members are disposed in a slot formed in the ferrule body. The slot may have a different shape than illustrated, and may allow more of the blade members to nest into the slot in the retracted position.

A biasing member **40** continuously biases each blade member toward the extended position. In this embodiment, the ferrule **12** has a pair of spring-receiving bores **18** defined therein and the biasing members **40** are coil springs disposed in the bores. The blade members **20** each further include an arm **42** that engages one of the springs **40**. In the retracted position, the arms **42** extend into the bores **18** and compress the springs **40**. The springs **40** expand, thereby pushing the arms **42** and blade members **20** outwardly as the blade members move to the extended position.

Preferably, a retaining element **50** initially retains the blade members **20** in the retracted position, as shown in FIG. **1**. The retaining element may take the form or a metal plastic or elastomer ring that engages recesses **52** in the second end of the blade members. Alternatively, the ring may be wrapped about the second end **24** of the blade members. As a further alternative, each blade member may have its own retaining element. As yet a further alternative, the retaining element may take other forms such as a lever or latch that initially retains the blade members **20** in the retracted position. As will be described in further detail below, the retaining element **50** is designed to disengage from the blade members **20** when the broadhead **10** punctures a target. For example, the material penetrated by the broadhead may push the retaining element **50** rearwardly to disengage it from the blade members.

In assembly, the arrowhead **10** is fixedly secured to an end of a longitudinally extending shaft forming a body of an arrow. In the illustrated embodiment, the attachment portion **16** of the arrowhead **10** is a threaded male portion that is threaded into a threaded receiving hole formed in the end of the rod. It should be appreciated that other attachment arrangements may be provided for fixedly securing the arrowhead to the rod.

In use, the arrow **60** is fired toward an animal. The blade members **20** are preferably initially maintained in the retracted position as the arrow is in flight toward the animal. The retracted position reduces the size of the broadhead thereby increasing accuracy. As the tip **14** and blade members **20** penetrate the skin of the animal the blade members **20** remain in the retracted position until the retaining element **50** is removed by the penetration. The blade members are then urged to the extended position due to the outward bias of the biasing members **40**. As the tip **14** and blade members **20** encounter a bone in the animal, such as a shoulder blade, the blade members **20** collapse toward the retracted position to allow the arrow to continue progress through the bone. As the ferrule **12** passes through the bone, the blade members **20** return to the extended position due to the force applied by the biasing member **40**. The biasing member **40** is provided with a predetermined spring force that allows the blade members **20** to move to the retracted position as the ferrule **12** passes through the bone and to return to the extended position after the ferrule **12** has passed through the bone. Thus, the blade members **20** are in the extended position on either side of the bone to maximize the cutting surface of the arrowhead **10** through the soft flesh of the animal.

Referring now to FIGS. **3** and **4**, a second embodiment of an arrowhead according to the present invention is generally shown at **60**. This embodiment is similar to the embodiment of FIGS. **1** and **2**. However, it differs from the earlier embodiment in that the biasing member **62** is disposed in a central axial bore of the ferrule **64**. The biasing member **62** engages a sliding element **66** which is also disposed in the bore. Articulating arms **68** interconnect the sliding element **66** with the blade members so as to bias them from the retracted position shown in FIG. **3** to the extended position shown in FIG. **4**.

Referring now to FIGS. **5** and **6**, a third embodiment of an arrowhead according the present invention is generally shown as **70**. This embodiment differs from the earlier embodiments in that the biasing member **72** is disposed in a coaxial bore adjacent the forward end of the ferrule **74**. The biasing member is illustrated as a coil spring which engages a sliding element **76** also disposed in the bore. The sliding element **76** engages inwardly extending tabs **78** on the blade members. These tabs **78** extend inwardly from the pivotal connection between the blade members and the ferrule. By pushing rearwardly on the tabs **78**, the sliding element **76** urges the blade members outwardly from the retractable position shown in FIG. **5** to the extended position shown in FIG. **6**. As also shown, the blade members in this embodiment have a somewhat different shape than the earlier embodiments. The blade shapes in all of the embodiments of the present invention may be altered from the illustrated versions.

Referring now to FIGS. **7** and **8**, a fourth embodiment of an arrowhead according to the present invention is generally shown at **80**. The biasing member takes the form of a pair of leaf springs that urge the blade members outwardly from the retractable position shown in FIG. **7** to the extended position shown in FIG. **8**. The biasing members may also take other forms, for example, the leaf springs may interconnect with the ferrule body ahead of the pivotal interconnection between the blade members and the ferrule and extend rearwardly to a position between the blade members. Other versions will also be clear to those of skill in the art. As also will be clear to those of skill in the art, the blade members may be disposed more closely to the ferrule in the retractable position than illustrated in the various embodiments. The blade members may also be shaped so as to nest more closely to the ferrule and/or

the ferrule body may have slots into which the blade members are partially disposed when in the retractable position.

Preferably, the various embodiments of the present invention utilize only the biasing member or members to urge and hold the blade members into the extended position. No latch or locking element is provided to hold the blade members in the extended position. Therefore, the blade members are free to move back to the retracted position when the arrowhead encounters a dense material such as bone.

The invention has been described in an illustrative manner. It is, therefore, to be understood that the terminology used is intended to be in the nature of words of description rather than of limitation. Many modifications and variations of the invention are possible in light of the above teachings. Thus, within the scope of the appended claims, the invention may be practiced other than as specifically described.

I claim:

1. A broadhead for an arrow having a shaft, the broadhead comprising:

a ferrule having a rearward end configured for attachment to the shaft and an opposite forward end with a ferrule body extending therebetween;

a first blade member having a first end pivotally interconnected with the ferrule body and an opposite second end, the first blade member having a retracted position wherein the second end is spaced from the ferrule body at a first distance and an extended position wherein the second end is spaced from the ferrule body by a distance which is greater than the first distance;

a second blade member having a first end pivotally interconnected with the ferrule body and an opposite second end, the first blade member having a retracted position wherein the second end is spaced from the ferrule body at a first distance and an extended position wherein the second end is spaced from the ferrule body by a distance which is greater than the first distance; and

at least one biasing member biasing the first and second blade members towards the extended positions, the biasing member being the only element operable to hold the blade members in the extended position.

2. A broadhead in accordance with claim **1**, wherein:

the pivotal interconnection between the first blade member and the ferrule body is at a fixed position relative to the ferrule body; and

the pivotal interconnection between the second blade member and the ferrule body being at a fixed position relative to the ferrule body.

3. A broadhead in accordance with claim **2**, wherein:

the pivotal interconnection between the first blade member and the ferrule body and the pivotal interconnection between the second blade member and the ferrule body are substantially equidistant from the forward end of the ferrule.

4. A broadhead in accordance with claim **1**, wherein:

the first ends of the first and second blade members are forward ends and the second ends are rearward ends.

5. A broadhead in accordance with claim **1**, wherein:

each blade member include a travel limit interacting with the ferrule body so as to define a maximum distance between the second end of the blade member and the ferrule body.

6. A broadhead in accordance with claim **5**, wherein the travel limit is a tab extending from the first end of each blade member, the ferrule body having an abutment that is engaged by the tabs.

7. A broadhead in accordance with claim **1**, further comprising:

a retaining element engaging the blade members to maintain the blade members in the retracted position.

8. A broadhead in accordance with claim **7**, wherein:

the retaining element is a ring engaging the second end of the blade members.

9. A broadhead in accordance with claim **1**, wherein:

the biasing member is a coil spring.

10. A broadhead in accordance with claim **1**, wherein the at least one biasing member comprises two biasing members, each member biasing one of the blade members.

11. A broadhead for an arrow having a shaft, the broadhead comprising:

a ferrule having a rearward end configured for attachment to the shaft and an opposite forward end with a ferrule body extending therebetween, the forward end of the ferrule defining the forward tip of the arrow and being fixed with respect to the ferrule body;

a first blade member having a forward end pivotally interconnected with the ferrule body and an opposite rearward end, the first blade member having a retracted position wherein the rearward end is spaced from the ferrule body at a first distance and an extended position wherein the rearward end is spaced from the ferrule body by a distance which is greater than the first distance, the pivotal interconnection between the first blade member and the ferrule body being at a fixed position relative to the ferrule body;

a second blade member having a forward end pivotally interconnected with the ferrule body and an opposite rearward end, the second blade member having a retracted position wherein the rearward end is spaced from the ferrule body at a first distance and an extended position wherein the rearward end is spaced from the ferrule body by a distance which is greater than the first distance, the pivotal interconnection between the second blade member and the ferrule body being at a fixed position relative to the ferrule body; and

at least one biasing member biasing the first and second blade members towards the extended positions.

12. A broadhead in accordance with claim **11**, wherein:

the pivotal interconnection between the first blade member and the ferrule body and the pivotal interconnection between the second blade member and the ferrule body are substantially equidistant from the forward end of the ferrule.

13. A broadhead in accordance with claim **11**, wherein:

each blade member includes a travel limit interacting with the ferrule body so as to define a maximum distance between the rearward end of the blade member and the ferrule body.

14. A broadhead in accordance with claim **13**, wherein the travel limit is a tab extending from the first end of each blade member, the ferrule body having an abutment that is engaged by the tabs.

15. A broadhead in accordance with claim **11**, further comprising:

a retaining element engaging the blade members to maintain the blade members in the retracted position.

16. A broadhead in accordance with claim **15**, wherein:

the retaining element is a ring engaging the second end of the blade members.

17. A broadhead in accordance with claim **11**, wherein:

the biasing member is a coil spring.

* * * * *

UNITED STATES PATENT AND TRADEMARK OFFICE

CERTIFICATE OF CORRECTION

PATENT NO. : 8,043,177 B2
APPLICATION NO. : 12/168189
DATED : October 25, 2011
INVENTOR(S) : Edward Flanagan

It is certified that error appears in the above-identified patent and that said Letters Patent is hereby corrected as shown below:

Col. 2, line 46: replace "FIG. 8 with" with -- FIG. 7 with --
Col. 3, line 8: replace "to spaced" with -- to be spaced --
Col. 3, line 47: replace "form or" with -- form of --

Signed and Sealed this
Thirty-first Day of January, 2012

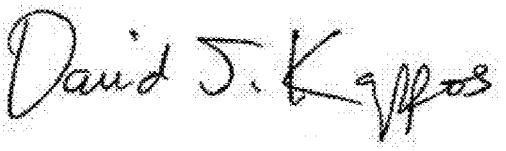

David J. Kappos
Director of the United States Patent and Trademark Office