Aug. 20, 1940. R. S. KRIEGER 2,212,345

ARROWHEAD

Filed Sept. 12, 1938

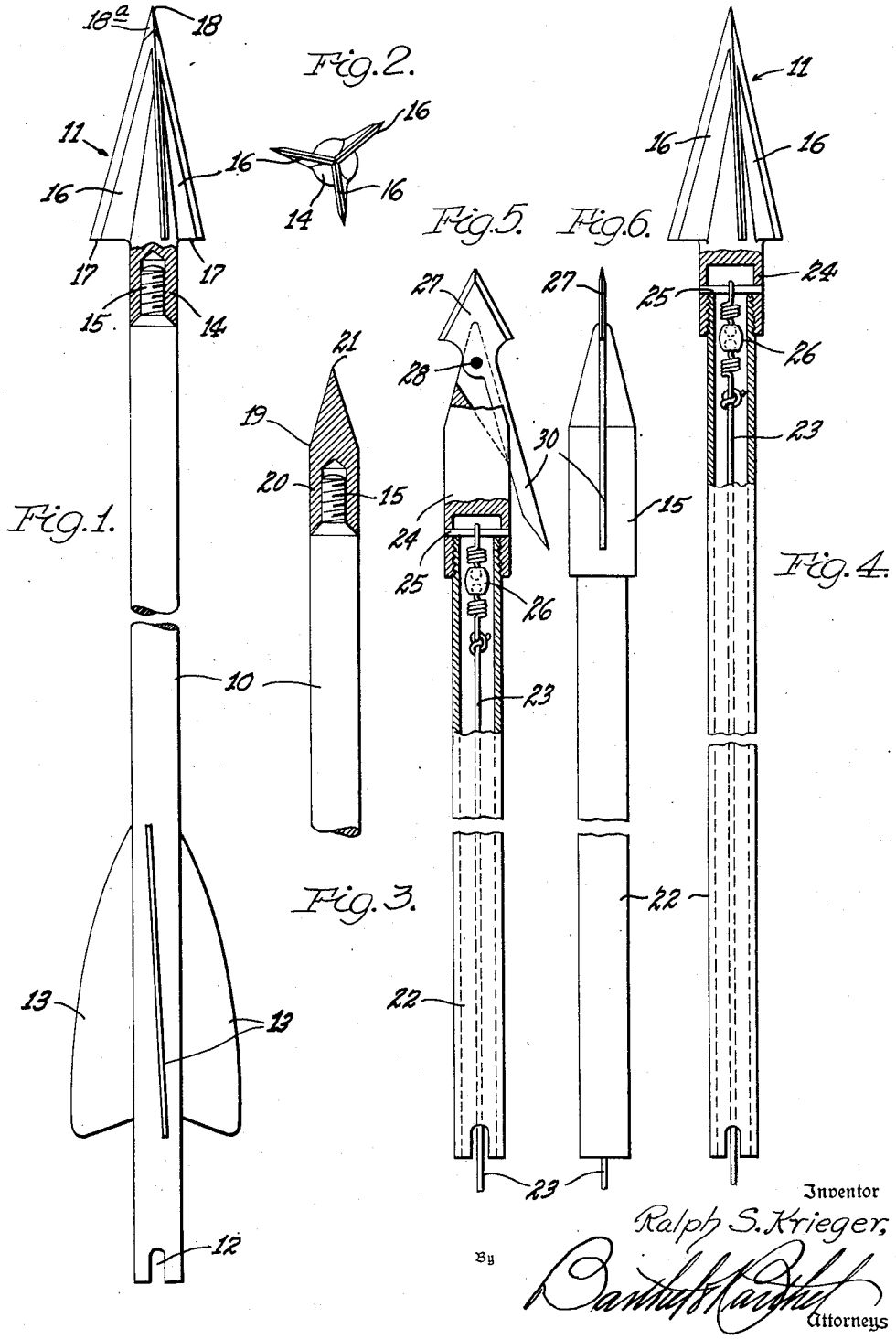

Inventor
Ralph S. Krieger,
By
Attorneys

Bowmar Archery, Ex. 1006

Patented Aug. 20, 1940 2,212,345

UNITED STATES PATENT OFFICE

2,212,345

ARROWHEAD

Ralph S. Krieger, St. Clair Shores, Mich.

Application September 12, 1938, Serial No. 229,405

1 Claim. (Cl. 273—106.5)

This invention relates generally to arrows and more particularly to arrowheads.

In the past, arrowheads have been provided which usually have a pair of radially spaced blades or wings and it has been found that this type of arrowhead presents little resistance to cross air currents with the result that the arrow is deviated by cross air currents from its true course of flight.

Consequently, it is the principal object of the present invention to provide an arrow of a character which will result in its more nearly following a true course of flight.

More specifically it is an object of the invention to provide an arrowhead which during flight of the arrow will impart positive rotation to the arrow and in so doing oppose cross air currents which otherwise would deflect the arrow's flight.

Other objects of the invention will become apparent from the following description taken in connection with the accompanying drawing, in which—

Figure 1 is a view of an arrow embodying my invention;

Fig. 2 is an end elevational view of the arrow;

Fig. 3 is a fragmentary view of an arrow having a different type of head;

Fig. 4 is another type of arrow having the improved arrowhead, and

Figs. 5 and 6 are views of a harpoon type of arrow.

Referring to the drawing by characters of reference, and first to Figure 1, the numeral 10 designates an arrow shaft on one end of which my improved arrowhead, as at 11, is secured, the other end of the shaft 10 having the usual slot 12 to receive the cord (not shown) of a bow and having the usual feathers 13. The arrowhead 11 includes a shank 14 which is preferably internally threaded to screwthread onto the shaft 10 which is provided with a reduced threaded end portion 15 whereby various types of arrowheads may be interchangeable on the shaft.

As shown in Fig. 1, the arrowhead 11 is provided with a plurality of equally spaced integral wings or blades 16 which are triangular in shape having rear or trailing edges 17, the wings tapering from their trailing edges to a penetrating point 18 which is coincident with the longitudinal axis of the shank 14 and shaft 10.

In order to provide an arrow which will oppose or resist deflection by air currents, the blades 16 are arranged at a slight acute angle or are spiral with respect to the longitudinal axis of the shank 14 or such that the trailing edges 17 are slightly off center as shown in Fig. 1. During flight of the arrow, the offset blades 16 cause the arrow to rotate and oppose cross air currents with the result that the arrow keeps more nearly to the mark than would otherwise be the case. Preferably, the arrowhead is made of some suitable light weight material, such as, aluminum and the heads are preferably cast. If desired, the tip or point as at 18a of the arrowheads may be formed of a hard metal such as steel which may be cast integral with the otherwise aluminum head. To reduce air friction the longitudinal edges of the wings or blades are sharpened to knife edges.

While the spiral arrowhead blades 16 will alone impart rotation to the arrow during its flight, I also prefer to arrange the feathers 13 at an angle to the arrow shaft 10 or spirally arranged on the shaft to also act with the head to rotate the arrow, the feathers being arranged at substantially the same angle as the blades 16. With this arrangement, it will be understood that the application of forces acting at both ends of the arrow shaft tend to keep the arrow on a true course of flight.

In Fig. 3 there is shown a different type of head 19, having a shank 20 provided with a pointed end 21 suitable for target practice. The head 19 does not have wings or blades but it will be seen that the arrowheads 11 and 19 are readily interchangeable. In Figs. 4, 5 and 6 are shown arrows which are adapted for fishing, these arrows having, metallic tubular shafts 22 through which the fish cord or line 23 extends and is secured to the arrowhead. Figs. 5 and 6 show a harpoon type of arrow whereas Fig. 4 shows an arrow having a head which is the same as the arrowhead of Fig. 1. The arrowheads of Figs. 4, 5 and 6 have a tubular shank 24 in which a transversely extending pin 25 is secured and to which the cord 23 is attached by means of a swivel 26 to prevent tangling of the cord. The harpoon arrow of Figs. 5 and 6 has a harpoon type of point 27 which is pivoted to the shank 24 by a pivot pin 28. The pivoted point 27 has an arm 30 and on entering an object pivots to a position transverse to the shank and shaft to oppose withdrawal of the arrow.

What I claim is:

An arrowhead comprising a cast aluminum shank having a plurality of integral and equally spaced triangular wings tapering from their trailing ends to a steel metallic point cast integral with the head, said wings extending from their trailing ends at an angle to the longitudinal axis of the shank to provide for rotation of an arrow during flight.

RALPH S. KRIEGER.