US007771297B2

(12) United States Patent
Kuhn

(10) Patent No.: US 7,771,297 B2
(45) Date of Patent: *Aug. 10, 2010

(54) **BROADHEAD ARROWHEAD**

(75) Inventor: **Todd A. Kuhn**, North East, MD (US)

(73) Assignee: **2XJ Enterprises, Inc.**, North East, MD (US)

(*) Notice: Subject to any disclaimer, the term of this patent is extended or adjusted under 35 U.S.C. 154(b) by 918 days.

This patent is subject to a terminal disclaimer.

(21) Appl. No.: **11/363,450**

(22) Filed: **Feb. 28, 2006**

(65) **Prior Publication Data**

US 2006/0194658 A1 Aug. 31, 2006

Related U.S. Application Data

(63) Continuation of application No. 10/734,645, filed on Dec. 15, 2003, now Pat. No. 7,037,223, which is a continuation-in-part of application No. 10/178,243, filed on Jun. 25, 2002, now Pat. No. 6,663,518.

(51) **Int. Cl.**
F42B 6/08 (2006.01)

(52) **U.S. Cl.** **473/583**; 473/584

(58) **Field of Classification Search** 473/578, 473/582, 583, 584

See application file for complete search history.

(56) **References Cited**

U.S. PATENT DOCUMENTS

3,672,677	A	6/1972	Moore	
3,897,062	A	7/1975	Christensen	
4,012,043	A	3/1977	Carella	
4,392,654	A	7/1983	Carella	
4,534,568	A	8/1985	Tone	
4,565,377	A	1/1986	Troncoso et al.	
4,986,550	A	1/1991	Segovia	
5,064,202	A	11/1991	Barner	
5,257,809	A	11/1993	Carrizosa	
5,613,688	A	3/1997	Carella	
5,636,845	A	6/1997	Newnam	
5,897,449	A	4/1999	Roberts et al.	
5,931,751	A	8/1999	Cooper	
6,142,896	A	11/2000	Simo et al.	
6,319,161	B1	11/2001	Martinez et al.	
6,663,518	B1	12/2003	Kuhn	
7,037,223	B2 *	5/2006	Kuhn	473/583

OTHER PUBLICATIONS

Compact Disk of six (6) pictures and two descriptive videos of a broadhead arrowhead called the "Borehead." The six (6) pictures are attached.

* cited by examiner

Primary Examiner—John Ricci
(74) *Attorney, Agent, or Firm*—Sterne, Kessler, Goldstein & Fox P.L.L.C.

(57) **ABSTRACT**

Disclosed is a broadhead arrowhead. The broadhead arrowhead includes a ferrule, one end portion of which is tapered to a substantial point. One or more blade assemblies extend outwardly from the ferrule. Each blade assembly has a first substantially planar main surface portion disposed in a plane at least substantially parallel to a longitudinal axis of the ferrule and a second surface portion having a planar region offset at an angle to the plane of the main surface portion. A generally continuously curved region is disposed between and connecting the first and second substantially planar portions, such that the blade assembly has an airfoil-type shape.

15 Claims, 7 Drawing Sheets

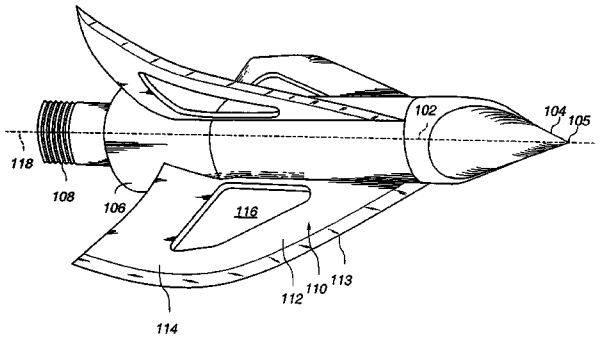

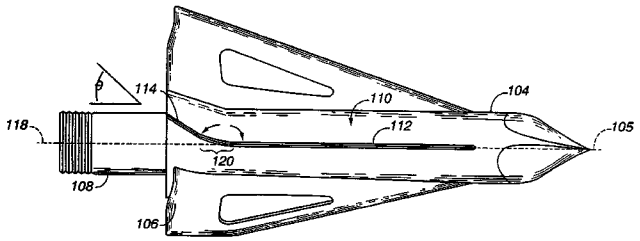

Bowmar Archery, Ex. 1008

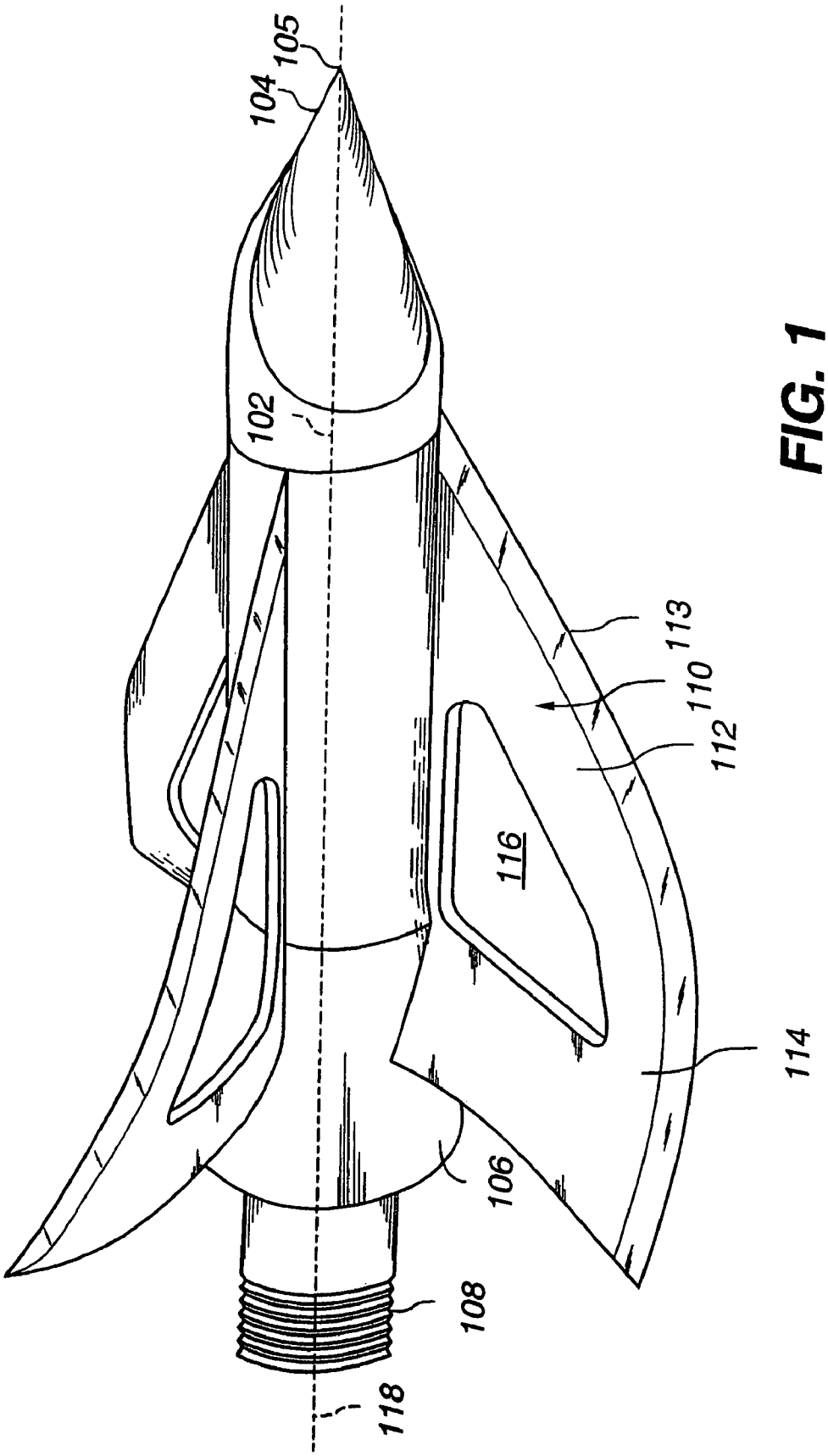

FIG. 1

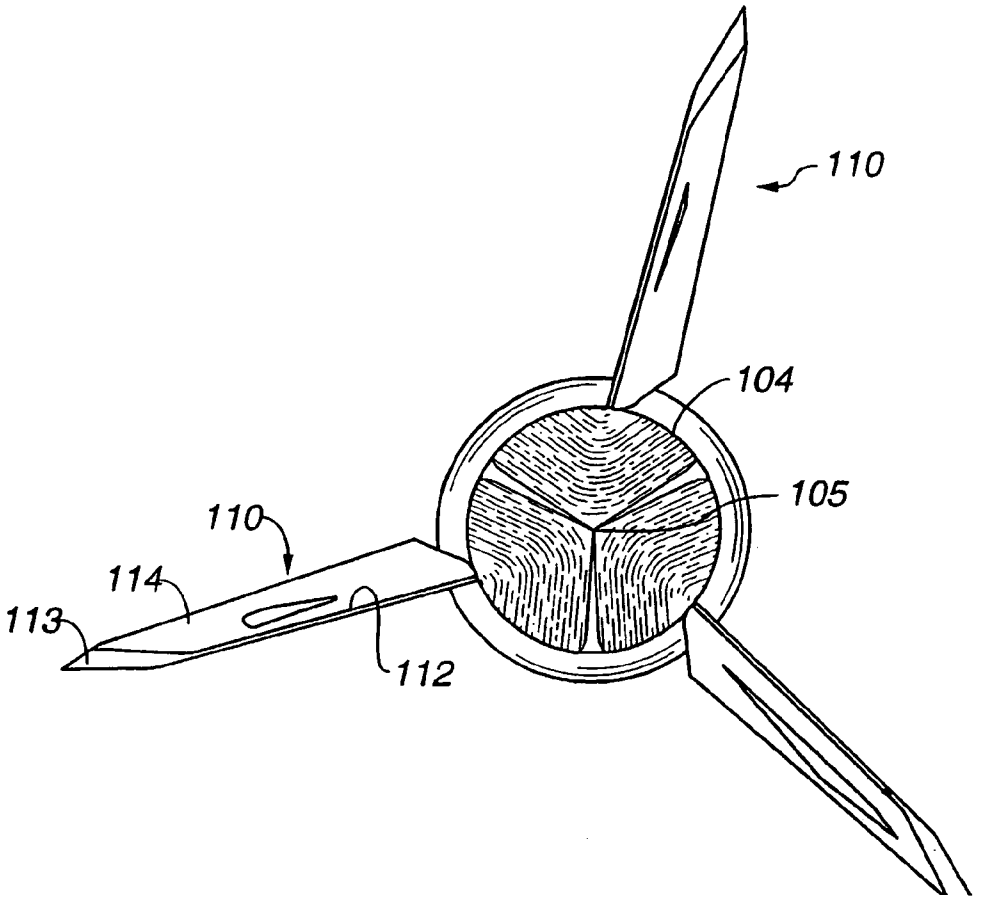

FIG. 2

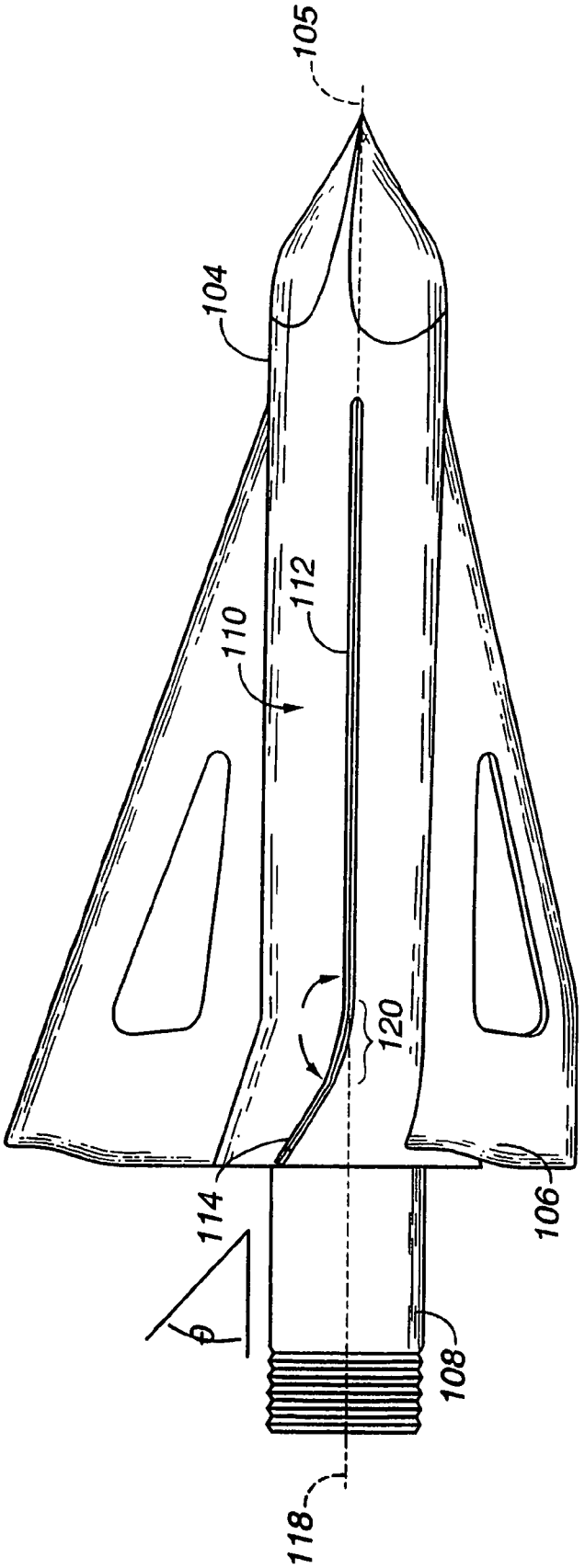

FIG. 3

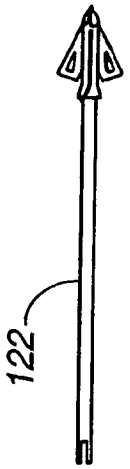

FIG. 5

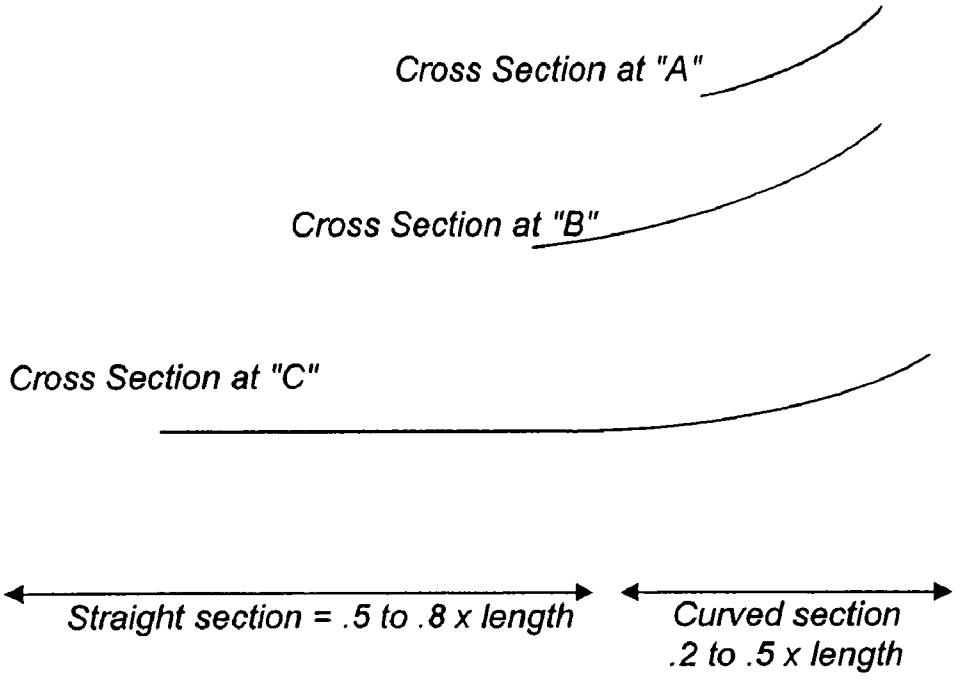
Cross Section at "A"
Cross Section at "B"
Cross Section at "C"
Straight section = .5 to .8 x length
Curved section
.2 to .5 x length

FIG. 4A

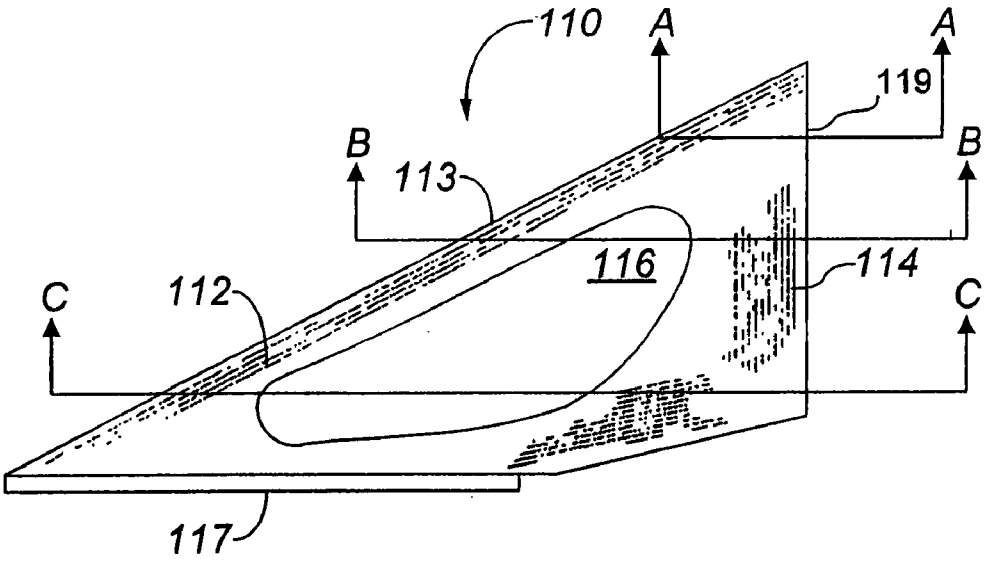
110
A
A
119
B
B
113
116
114
C
C
112
117

FIG. 4

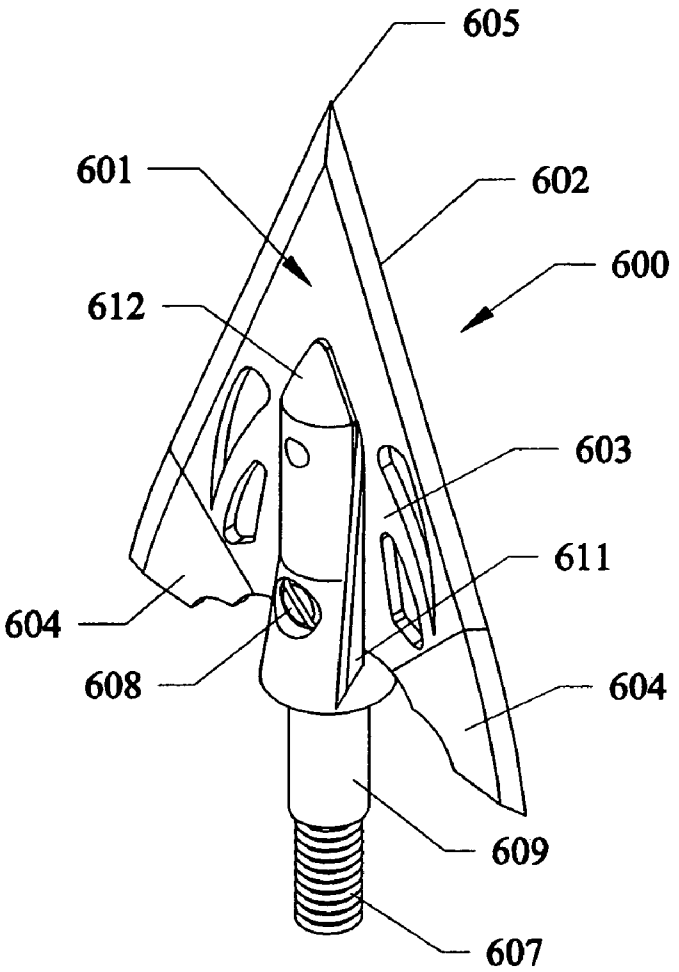

Fig. 6

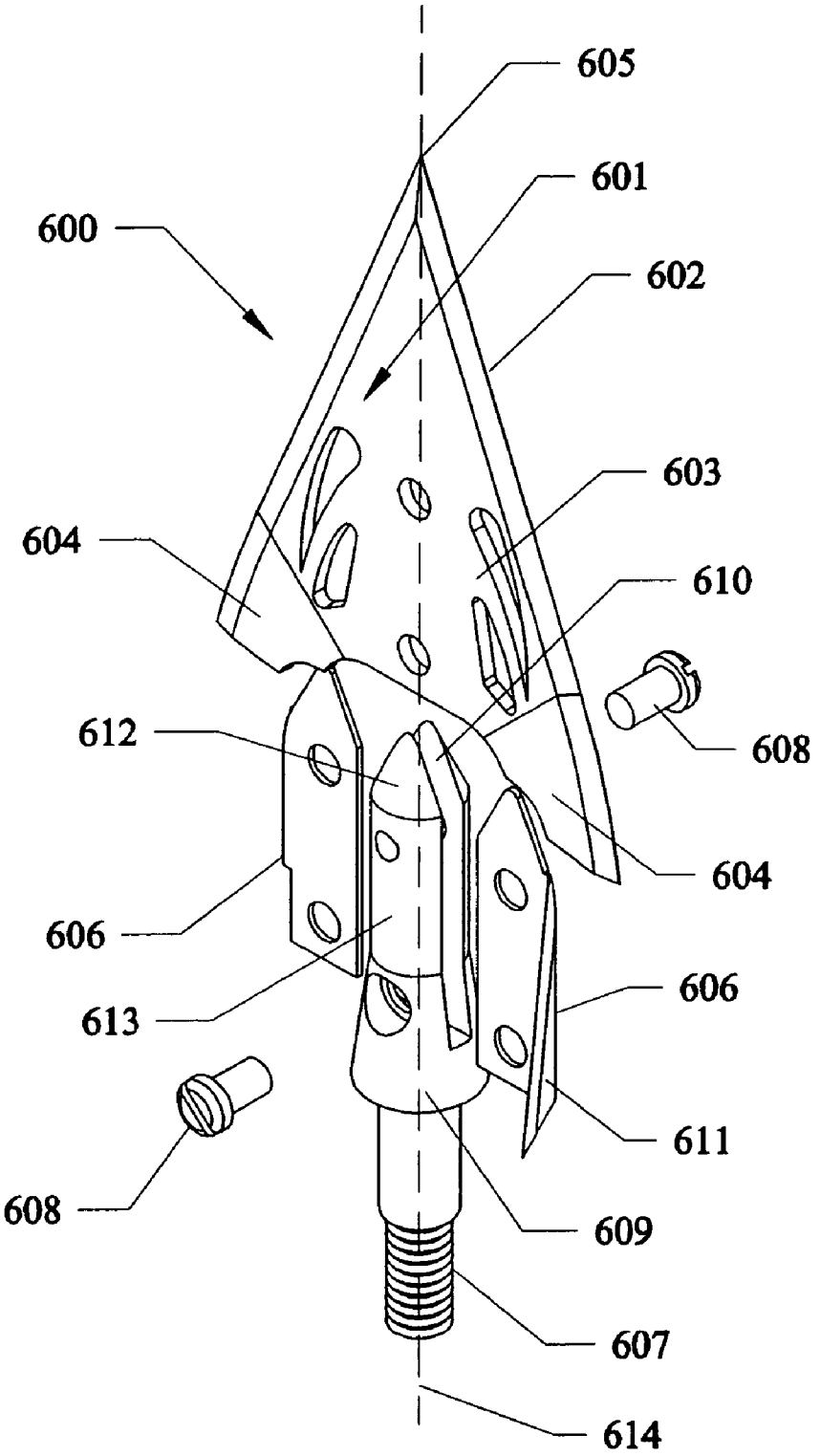
605
601
600
602
603
604
610
612
608
604
606
606
613
611
608
609
607
614

Fig. 7

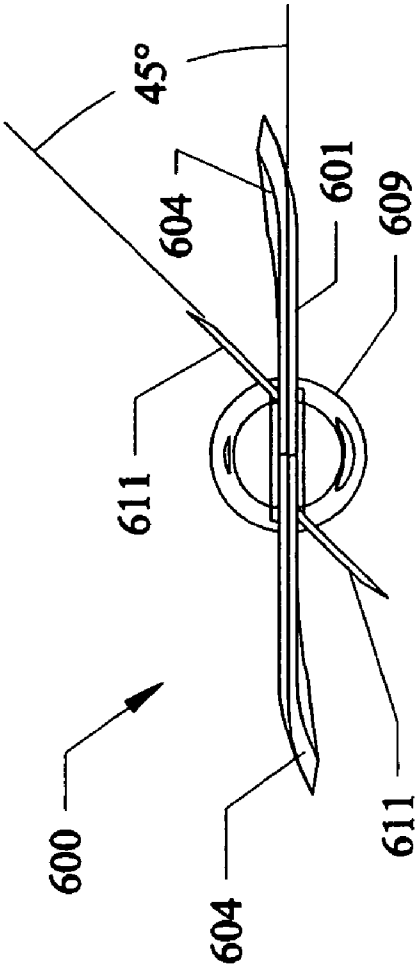

Fig. 8

BROADHEAD ARROWHEAD

CROSS-REFERENCE TO RELATED APPLICATIONS

This is a continuation of U.S. patent application Ser. No. 10/734,645, filed Dec. 15, 2003, which is a continuation-in-part of U.S. patent application Ser. No. 10/178,243, filed Jun. 25, 2002, the disclosure of which is incorporated herein by reference as though set forth in full below in the entirety.

BACKGROUND OF THE INVENTION

Field of the Invention

This invention relates to arrows and arrowheads. More particularly, the invention relates to arrowheads of the type commonly referred to as "broadhead" arrowheads typically, but not exclusively, used by hunters.

BRIEF DESCRIPTION OF THE FIGURES

FIG. **1** shows a side perspective view of the broadhead arrowhead of this invention;

FIG. **2** shows an end view of the broadhead arrowhead looking rearwardly from the forward end of the arrowhead.

FIG. **3** shows a side detail view of the arrowhead.

FIG. **4** shows a detailed view of one of the blade assemblies of the arrowhead.

FIG. **4**A shows the curvature of the blade assembly at three sections taken along section lines "A-A", "B-B", "C-C", respectively, in FIG. **4**.

FIG. **5** shows the broadhead arrowhead mounted to an arrow shaft.

FIG. **6** shows a side perspective of an alternate embodiment of the broadhead arrowhead.

FIG. **7** shows a detail view of the alternate embodiment of the broadhead arrowhead.

FIG. **8** shows a front view of the alternate embodiment of the broadhead arrowhead.

DETAILED DESCRIPTION OF THE INVENTION

Referring to the drawings, the broadhead arrowhead of this invention comprises a body or ferrule **102**. At one end, called, for convenience, the proximal end, ferrule **102** incorporates a first, or head, end portion **104**. End portion **104** typically tapers to a point **105**. Ferrule **102** also has second, or distal, end portion **106**. End portion **106** may be slightly flared outwardly. It is not necessary that end portion **106** be flared outwardly. In some embodiments, end portion **106** may continue substantially straight to the rear end of body **102**. Ferrule **102** is typically symmetrical about a longitudinal axis **118** between first end portion **104** and second end portion **106**.

A mounting stub **108** extends rearwardly from distal end portion **106** of arrowhead body **102**. Typically, stub **108** is symmetrical about and coaxial with longitudinal axis **118**. Mounting stub **108** is intended to fit into a mating recess typically located at one end of a standard arrow shaft. Stub **108** may be threaded to mate with matching threads in the arrow shaft recess or it may be seated in the recess in a press fit arrangement. Alternatively, mounting stub **108** may be glued or otherwise sealed into the mating recess of the arrow shaft.

In other variations of mounting means, instead of a stub **108**, distal end **106** of ferrule **102** may be hollowed out to fit over an arrow shaft. In such an arrangement, the inside of hollow distal end **106** may be threaded to mate with threads on the outer suface of the arrow shaft; or distal end **106** may be press fit over the arrow shaft. Alternatively, distal end **106** may be fitted over the end of the arrow shaft and glued or otherwise sealed to the arrow shaft.

One or more blade assemblies **110** extend laterally outwardly from ferrule **102**. Preferably the arrowhead is constructed with two, three or four blade assemblies. Typically, if two blade assemblies are used, they are disposed substantially diametrically opposite each other about longitudinal axis **118** of ferrule **102**. Three blade assemblies are typically disposed at angles of approximately 120° around longitudinal axis **118**. Correspondingly, four blade assemblies **110** are typically mounted at 90° angles relative to each other about horizontal axis **118**.

Blade assembly **110** is shown in detail in FIGS. **1** and **4**. Each blade assembly **110** comprises a first substantially planar blade assembly portion **112** and a second blade assembly portion **114**. A leading edge **113** of first portion **112** is typically sharpened to better allow the arrowhead to penetrate a target. First blade assembly portion **112** may comprise a solid substantially flat planar portion or optionally may have a cutout section **116**. Second blade assembly portion **114** extends rearwardly from first blade assembly portion **112**. Second blade assembly portion **114** is preferably curved, with a radius of curvature optimally between about 0.2" and 0.5", giving the blade the characteristics of an airfoil. The radius of curvature may vary over the surface of the blade. A trailing edge **119** of the blade is at an angle to arrowhead body **102**. This angle may be as great as 45 degrees or more, but optimally it increases from approximately 5 degrees to approximately 35 degrees at the blade tip. The blades, acting together, form an axial-flow turbine.

As shown in FIG. **3**, second blade assembly portion **114** is joined to first blade assembly portion **112** by a continuously curved region **120**. The radius of curvature of region **120** is in the range of between about 0.2" and 0.5". An angle θ generally defines the angle between first planar portion **112** and second planar portion **114**. This angle θ is in the range of between about 5° and 25°. This configuration gives the blade assembly an airfoil-type shape. The length of first substantially planar portion **112** is between about 50% and 80% of the total length of blade assembly **110**. Correspondingly, second substantially planar portion **114** comprises between about 20% and 50% of the total length of blades assembly **110**.—It will be understood by those skilled in the art that where the arrowhead has more than one blade assembly **110**, each blade assembly portion **114** is preferably angled relative to each corresponding blade assembly portion **112** in the same direction and at substantially the same angle for each blade assembly **110**.

Alternatively, first planar portion **112** and second angled planar portion **114** may be joined at a more sharply defined angle θ with a radius of curvature close to or at "0". However, this alternative configuration does not produce the same high quality of aerodynamic effects as does the airfoil shape shown in FIG. **3**.

FIG. **4**A shows the curvature of the blade assembly **110** at three sections taken along section lines "A-A", "B-B", "C-C", respectively, in FIG. **4**.

Arrowhead body **102** and blade assemblies **110** may be made of any suitable material, such as, but not limited to, steel, aluminum, plastic, etc. As shown in FIG. **4**, planar portion **112** of blade assembly **110** has a short extension **117** that fits into a slotted opening in ferrule **102**. Extension **117** extends from the inner edge of planar portion **112** substan-

tially up to but just short of curved region **120**. Extension **117** may be glued, welded or soldered to the slot in body **102**. Alternatively, blade assembly **110** and body **102** may be integrally formed as by molding. Other techniques for securing blade assembly **110** to body **102** would be apparent to those skilled in the relevant arts.

In summary, each blade assembly **110** comprises a substantially flat planar portion **112** extending laterally outwardly of body **102** and substantially parallel to longitudinal axis **118**. A second blade assembly portion **114** is angled at an angle of between about 5° and 25° out of the plane of section **112** away from alignment with axis **118** and at an angle of between about 5° and about 45° to the ferrule body **102**. FIG. **2** shows end portions **114** of each blade angled slightly clockwise relative to the major plane of section **112**. Alternatively, end portions **114** can be angled slightly counterclockwise relative to the major plane of section **112**.

In the embodiment shown, each blade assembly **110** has the general shape of a substantially triangular or delta wing configuration. In other embodiments, blade assembly **110** can have the general shape of a swept wing or straight wing.

Much like the control surfaces of an aircraft wing, the ratio of angled portion length to overall blade assembly length can be relatively small. For example, in one embodiment, the ratio of the length of angled portion **114** to the overall length of blade assembly **110** is in the range of between 10% and 50%, and preferably between about 20% and 50%.

Each blade of the broadhead arrowhead incorporates a substantially similar airfoil that produces a rotational torque about longitudinal axis **118**. In flight, these forces induce a rapid rotation of the arrow about longitudinal axis **118** while minimizing aerodynamic drag. The plane of each blade assembly **110** remains parallel to the shaft of the arrow along its cutting edge **113**.

One of the features of the arrowhead of this invention is its ability to produce stabilized arrow flight without the use of fletching or tail fins (or feathers). FIG. **5** shows the broadhead arrowhead of this invention mounted to an arrow shaft **122** without fletching. Tests have shown that an arrow using the broadhead of this invention without fletching tracks true in flight and does not deviate significantly from the planned flight course. This is due to the rotation induced in the arrow by the aerodynamically designed broadhead blades, which is sufficient to stabilize the arrow in flight. Eliminating the fletching in fact improves flight characteristics because the rotational drag normally induced by the fletching is avoided. It should be noted, however, that the arrowhead of the invention can be used with fletched arrow shafts, as well.

A further embodiment of the broadhead of this invention comprises a single blade that provides a similar function as two independent assemblies. As shown in FIGS. **6-8**, a broadhead arrowhead **600** comprises a body or ferrule **613**. At a first, or proximal, end **612**, ferrule **613** incorporates a longitudinal slot **610** or other means for the purpose of mechanically securing a blade assembly **601** and up to two optional bleeder blades **606**. Ferrule **613** also has a second, or distal, end portion **609**. Second end portion **609** may be slightly flared outwardly. It is not necessary that second end portion **609** be flared outwardly, however. In some embodiments, second end portion **609** may continue substantially straight to the rear end of body **613**. Ferrule **613** is typically symmetrical about a longitudinal axis **614** between first end portion **612** and second end portion **609**.

A mounting stub **607** extends rearwardly from second end portion **609** of arrowhead body **613**. Typically, stub **607** is symmetrical about and coaxial with longitudinal axis **614**. Mounting stub **607** is intended to fit into a mating recess typically located at one end of a standard arrow shaft. Stub **607** may be threaded to mate with matching threads in the arrow shaft recess or it may be seated in the recess in a press fit arrangement. Alternatively, mounting stub **607** may be glued or otherwise sealed into the mating recess of the arrow shaft.

In other variations of mounting means, instead of a stub **607**, second end **609** of body **613** may be hollowed out to fit over an arrow shaft. In such an arrangement, the inside of hollow second end **609** may be threaded to mate with threads on the outer surface of the arrow shaft; or distal second end **609** may be press fit over the arrow shaft. Alternatively, second end **609** may be fitted over the end of the arrow shaft and glued or otherwise sealed to the arrow shaft.

Blade assembly **601** extends laterally outwardly from ferrule **613** in two directions diametrically opposite each other about longitudinal axis **614** of ferrule **613** and disposed in a plane at least substantially parallel to the longitudinal axis of ferrule **613**. Blade assembly **601** comprises a first substantially planar blade assembly portion **603** and two second blade assembly portions **604**. The leading edge **602** of first portion **603** is typically sharpened to better allow the arrowhead to penetrate a target. First blade assembly portion **603** may comprise a solid substantially flat planar portion or optionally may have one or more cutout sections. Two second blade assembly portions **604** extend rearwardly from first blade assembly portion **603** at an angle thereto. Second blade assembly portion **604** is preferably continuously curved, with a radius of curvature optimally between about 0.2" and 0.5", giving the blade the characteristics of an airfoil. The radius of curvature may vary over the surface of the blade in a compound angle such that each trailing edge of the second portion **604** is at an angle to arrowhead body **613** and at an angle to first portion **603**. This angle may be as great as 45 degrees or more, but optimally it increases from approximately 5 degrees to approximately 35 degrees at the blade tips and most optimally increases from approximately 5 degrees to approximately 25 degrees at the blade tips. Second blade assembly portions **604** are angled out of the plane of first assembly portion **603** in opposing directions as shown in FIG. **8**. The two second portions **604**, acting together, form an axial-flow turbine in the same manner as would two blade assemblies **110** described above. It will be understood by those skilled in the art that each second blade assembly portion **604** is preferably angled relative to first blade assembly portion **603** in the same rotational direction and at substantially the same angle.

FIG. **8** shows second end portions **604** of each blade angles slightly counterclockwise relative to the major plane of first planar portion **603**. Alternatively, second end portions **604** can be angled slightly clockwise relative to the major plane of first planar portion **603**.

The length of first substantially planar portion **603** is between about 50% and 80% of the total length of blade assembly **601**. Correspondingly, second substantially planar portion **604** comprises between about 20% and 50% of the total length of blade assembly **601**.

Alternatively, first planar portion **603** and second angled portion **604** may be joined at a more sharply defined angle θ with a radius of curvature close to or at "0". However, this alternative configuration does not produce the same high quality of aerodynamic effects as does the airfoil shape shown in FIG. **7** and FIG. **8**.

Arrowhead body **613** and blade assembly **601** may be made of any suitable material, such as, but not limited to, steel, aluminum, plastic, etc. As shown in FIG. **7**, first planar portion **603** of blade assembly **601** fits into a slotted opening **610**

in body **613**. First portion **603** may be glued, welded, soldered, or otherwise mechanically attached into the slot **610** of body **613**. FIG. **7** shows a pair of screws **608** used to provide this attachment means. The use of screws permits easy blade replacement in the field. Alternatively, blade assembly **601** and body **613** may be integrally formed as by molding. Other techniques for securing blade assembly **601** to body **613** would be apparent to those skilled in the relevant arts.

In the embodiment shown, blade assembly **601** has the general shape of a substantially triangular or delta wing configuration. In other embodiments, blade assembly **601** can have the general shape of a swept wing or a straight wing.

Much like the control surfaces of an aircraft wing, the ratio of angled portion length to overall blade assembly length can be relatively small. For example, in one embodiment, the ratio of the length of angled second portion **604** to the overall length of blade assembly **601** is in the range of between 10% and 50%, and preferably between about 20% and 50%.

One of the features of all embodiments of the arrowhead of this invention is its ability to produce stabilized arrow flight without the use of fletching or tail fins (or feathers). All embodiments of the arrowhead of the invention can be used with fletched arrow shafts as well.

An optional feature of the present invention is the inclusion of one or two bleeder blades **606**. For aerodynamic symmetry, two bleeder blades **606** are preferably employed. Each bleeder blade includes a second bleeder blade portion **611** which is disposed at an angle θ' relative to the main plane of blade assembly **601** as shown in FIG. **8**. Angle θ' is preferably in the range between 30 and 70, but preferably in the range between 45 and 60 degrees. Bleeder blades **606** may be attached to body **613** by any means common in the art. FIG. **7** depicts bleeder blades **606** attached mechanically using the same screws **608** that are used to attach blade assembly **601**.

The overall size of bleeder blade **606** is greatly reduced relative to the size of blade assembly **601**. As with other broadhead designs, bleeder blades **606** of the present invention are meant to inflict additional damage to the target without substantially reducing overall penetration depth as may be the case if additional blades of similar or identical size to the main blade assembly **601** were included in the design. Smaller blades still cut, but their friction with the wound is reduced.

While various embodiments of the present invention have been described above, it should be understood that they have been presented by way of example only, and not limitation. Thus, the breadth and scope of the present invention should not be limited by any of the above-described exemplary embodiments, but should be defined only in accordance with the following claims and their equivalents.

What is claimed is:

1. A broadhead arrowhead, comprising:

a body having a longitudinal axis;

a blade assembly coupled to and extending outwardly from the body;

the blade assembly having a first substantially planar portion disposed in a plane at least substantially parallel to the longitudinal axis of the body and a second portion located at the rear end portion of the first planar portion in the direction of motion of the arrowhead and disposed at an angle to the plane of the first planar portion; and

a curved region disposed between and connecting the first and second portions, wherein the blade assembly has an airfoil-type shape that enables the arrowhead to rotate about the longitudinal axis in flight.

2. An arrowhead according to claim **1**, further comprising a plurality of blade assemblies disposed substantially symmetrically around the longitudinal axis of the body.

3. An arrowhead according to claim **2**, further comprising at least three blade assemblies disposed substantially symmetrically around the longitudinal axis of the body spaced at angles of approximately 120° from each other.

4. An arrowhead according to claim **3**, wherein one end portion of the body is tapered substantially to a point.

5. An arrowhead according to claim **2**, further comprising means for mounting the arrowhead to an arrow shaft.

6. An arrowhead according to claim **5**, wherein the arrowhead mounting means comprises a stub member extending from one end of the body substantially coaxial with the longitudinal axis of the body.

7. An arrowhead according to claim **6**, wherein the stub member is threaded to mate with matching threads on an arrow shaft.

8. An arrowhead according to claim **2**, wherein the second portion has a length of between about 20% and 50% of the overall length of the blade assembly.

9. An arrowhead according to claim **2**, wherein the curved region has a radius of curvature of between about 0.2" and 0.5".

10. An arrowhead according to claim **2**, wherein the second portion has a trailing edge region disposed at an angle to the body.

11. An arrowhead according to claim **10**, wherein said trailing edge region is disposed at an angle to the body in the range of about 5 degrees and about 45 degrees.

12. An arrowhead according to claim **11**, wherein said trailing edge region is disposed at an angle to the body in the range of about 5 degrees and about 35 degrees.

13. A broadhead arrow, comprising:

a shaft having a longitudinal axis;

a body having a longitudinal axis mounted to one end portion of the shaft such that the longitudinal axis of the body is coincident with the longitudinal axis of the shaft;

a blade assembly coupled to and extending outwardly from the body;

the blade assembly having a first substantially planar portion disposed in a plane at least substantially parallel to the longitudinal axis of the body and a second portion located at the rear end portion of the first planar portion in the direction of motion of the arrowhead and disposed at an angle to the plane of the first planar portion; and

a curved region disposed between and connecting the first and second portions, wherein the blade assembly has an airfoil-type shape that enables the arrowhead to rotate about the longitudinal axes of the body and shaft in flight.

14. A broadhead arrow according to claim **13**, further comprising fletching coupled to a second end portion of the shaft spaced from the one end portion.

15. A broadhead arrow according to claim **13**, wherein the shaft is devoid of fletching.

* * * * *