United States Patent

[11] 3,600,835

[72] Inventor Grover E. Hendricks
2241 Lake St., Niles, Mich. 49120

[21] Appl. No. 785,961
[22] Filed Dec. 23, 1968
[45] Patented Aug. 24, 1971

[54] **SPEAR HEAD WITH SWINGABLE BARB**
4 Claims, 5 Drawing Figs.

[52] **U.S. Cl.** ..... **43/6,** 30/159, 273/106.5 B
[51] **Int. Cl.** **A01k 81/04**
[50] **Field of Search** ..... 273/106.5 B; 43/6; 30/159

[56] **References Cited**

UNITED STATES PATENTS

465,715	12/1891	Lutters	30/159
592,612	10/1897	Johnson	30/159
2,859,970	11/1958	Doonan	273/106.5 B

FOREIGN PATENTS

62,696	1955	France	30/159
316,651	1934	Italy	30/159

Primary Examiner—Richard C. Pinkham
Assistant Examiner—Paul E. Shapiro
Attorney—Oltsch & Knoblock

ABSTRACT: A head for a spear or like weapon having a tip section and a body section. An elongated barb is pivotally connected to the forward end of the body section and is received therein, and is resiliently urged outwardly therefrom. A catch mechanism is provided to retain the barb in the body portion and is provided with a part which projects outwardly of the body portion, and when engaged by a target, releases the catch and allows the barb to pivot to its outward position. In one embodiment the catch is a helical spring mounted about a shoulder on the rear end of the barb. In a second embodiment the catch is a pivotal element which is resiliently urged to engage a shoulder on the rear end of the barb.

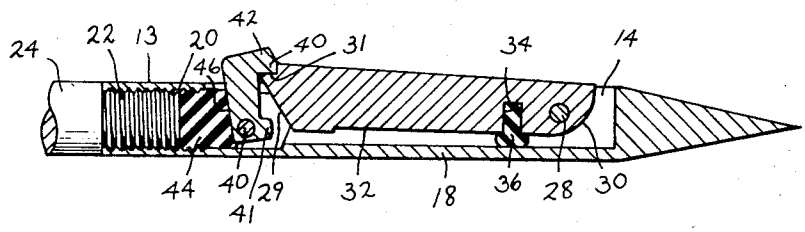

Bowmar Archery, Ex. 1013

Fig. 1

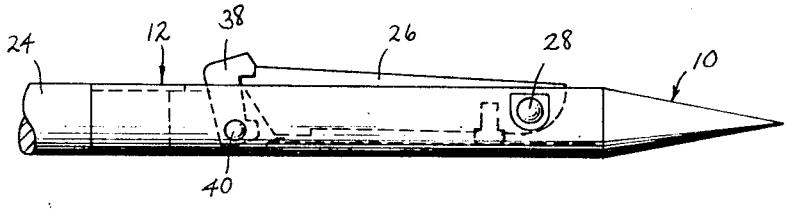

Fig. 2

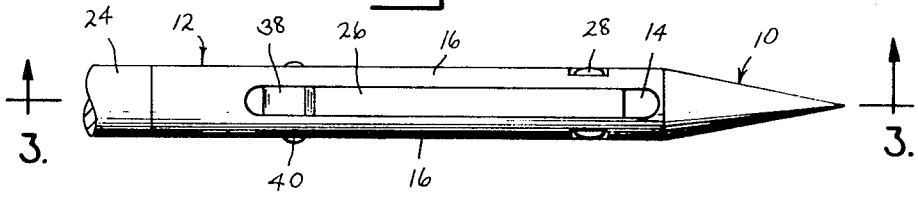

Fig. 3

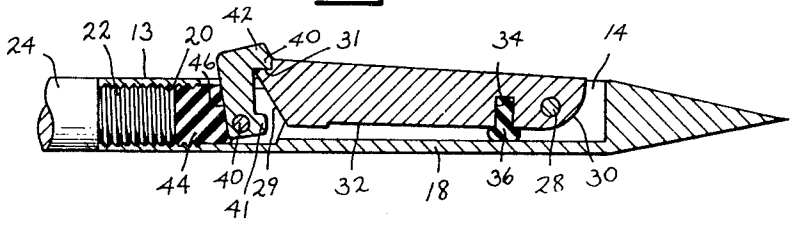

INVENTOR.
GROVER E. HENDRICKS
BY Oltsch & Knoblock
ATTORNEYS

Fig. 4

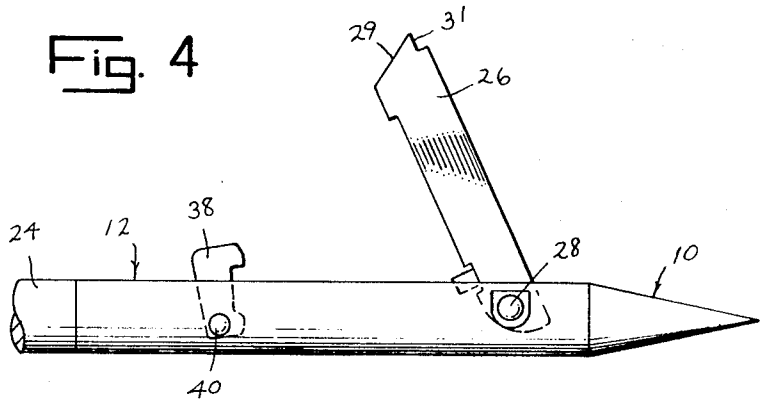

Fig. 5

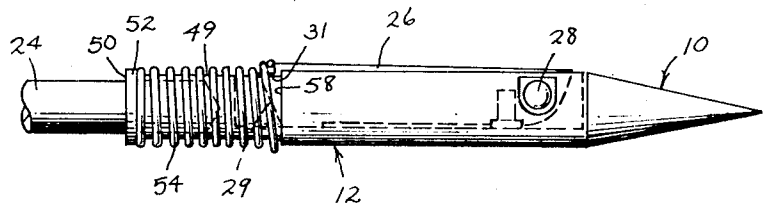

INVENTOR
GROVER E. HENDRICKS
BY Oltsch & Knoblock
ATTORNEYS

SPEAR HEAD WITH SWINGABLE BARB

SUMMARY OF THE INVENTION

This invention relates to a head for a spear or like weapon and comprises a tip section and a body section which extends rearwardly from said tip section. The body section of the head has a longitudinal slot therein which receives an elongated barb having its forward end pivotally connected to the body section. The barb is swingable about its pivot connection between a closed position in which it is substantially received within the slot in the body section and an open position in which it extends laterally outwardly of the body section. Biasing means are provided for urging the barb into its path of swing from its closed position. A catch is attached to the body portion of the head and is movable fore and aft relative thereto into a lock position in which the catch projects into the path of swing of said barb to engage and retain the barb in its closed position. The catch is normally biased into its lock position and includes a part which projects laterally outwardly from said body section and which, when the head enters a target, engages the target to cause the catch to move from its lock position and out of the path of swing of said barb.

The weapon head of this invention has particular application to underwater spears which are utilized to catch game fish. The weapon head has two movable parts, that is a pivotal barb and a catch for retaining the barb in its closed position during flight to a target. The catch is biased into locking engagement with the barb and is releasable upon entry of the weapon head into the target. The barb has a cam surface which engages the catch during closure or cocking of the barb and causes the catch to be moved rearwardly until it snaps into locking engagement with the barb. This cocking action between barb and catch permits the barb to be quickly closed and the head withdrawn from the target with only a minimal expenditure of time and effort on behalf of the weapon user.

Accordingly, it is an object of this invention to provide a head for a spear or like weapon having a pivotal barb part which can be rapidly and simply locked in a closed position substantially within the weapon head.

It is a further object of this invention to provide a head for a spear or like weapon which can be rapidly and simply removed from a target.

Other objects of this invention will become apparent upon a reading of the invention's description.

BRIEF DESCRIPTION OF THE DRAWINGS

FIG. 1 is a side view of one embodiment of the weapon head of this invention showing the barb of the head in closed position.

FIG. 2 is a view of the weapon head of FIG. 1 as seen from above.

FIG. 3 is an axial sectional view taken along line3–3 of FIG. 2.

FIG. 4 is a side view of the weapon head illustrated in FIG. 1 showing the barb of the head in open position.

FIG. 5 is a side view of another embodiment of the weapon head of this invention showing the barb of the head in closed position.

DESCRIPTION OF THE PREFERRED EMBODIMENTS

The preferred embodiments illustrated are not intended to be exhaustive or to limit the device to the precise forms disclosed. They are chosen and described in order to best explain the principles of the invention and its application and practical use to thereby enable others skilled in the art to best utilize the invention.

The weapon head illustrated in FIGS. 1—4 include the tip section **10** which is preferably conical and a body section **12** which is preferably cylindrical and which extends rearwardly from tip **10**. Body section **12** of the weapon head has a longitudinal slot **14** formed therein, slot **14** is defined in part by spaced side parts **16** and an interconnecting base part **18**. The rear end portion **13** of body section **12** preferably has an axial bore **20** formed therein which communicates with longitudinal slot **14** in body **12** and which is internally threaded so as to receive the threaded reduced forward end portion **22** of a weapon shaft **24**. A barb **26** is positioned within longitudinal slot **14** of body section **12** and is pivotally connected at its forward end to body section **12**. One means of connecting barb **26** to body section **12** is by a pin **28** which is inserted through registering apertures in the barb and the side parts **16** of body section **12**. Barb **26** is swingable about its pivot connection between a closed position in which it is substantially entirely received within slot **14**, as shown in FIG. **1**, and an open position in which its free end projects laterally outwardly of the body **12**, as shown in FIG. **4**. The end edge face **30** of barb **26** nearest the pivot connection of the barb is so spaced from the pivot connection that, when barb **26** is swung to its open position with the included angle between the free end of the barb and body section preferably being some selected angle between 45° and 85°, end face **30** abuts base part **18** of the body section and serves to prevent any further forward movement of the barb relative to the body section. The inner side edge face **32** of barb **26** has a bore **34** therein which is positioned intermediate the length of barb **26** and preferably adjacently rearward of the pivot connection of the barb. A resilient member **36**, preferably of a rubber composition, is pressed into bore **34** and includes an end portion which projects beyond inner face **32** of barb **26** and which compressingly engages base part **18** of body section **12** when barb **26** is in its closed position. The end face **29** of barb **26** most distant from its pivot connection is preferably beveled, as best shown in FIGS. **3** and **4**, and defines a cam surface.

A catch **38** is disposed within longitudinal slot **14** of body section **12** and is preferably positioned adjacently rearward of barb **26**. Catch **38** is connected at one end to body section **12**, preferably by a transverse pin **40**, so as to be pivotal in a fore and aft direction within slot **14**. The free end of catch **38** includes a lip **40** which is adapted to engage an inset part or shoulder **31** of barb outer side face **33** and retain barb **26** in its closed position. The outer marginal portion **42** of the free end of catch **38** preferably projects laterally outwardly of body section **12**.

A resilient member **44** is disposed within longitudinal bore **20** in body section **12** and is positioned against rear edge face **46** of catch **38** so as to urge catch **38** into a forward or lock position in which lip **40** of the catch is positioned to engage inset part **31** of the barb. Resilient member **44** is preferably formed of a rubber composition and is preferably retained within body section **12** and against catch **38** by the abutting end portion **22** of the weapon shaft **24**. It is to be understood that in some constructions of this invention the head and weapon shaft may be of integral one-piece construction. In constructions of this type, longitudinal bore **20** in body section **12** of the head is omitted and resilient member **44** is preferably inserted into longitudinal slot **14** in the body section behind catch **38** and wedged therein between the adjacent end wall of the slot and rear edge face **46** of the catch. Catch **38** preferably includes a forwardly projecting lug part **41** which is located adjacent the pivot connection of the catch and which engages base part **18** of body **12** and serves as a stop for catch **38**.

To cock or position barb **26** in its closed position, the barb is swung inwardly or counterclockwise as viewed in FIG. **4**, into longitudinal slot **14** of body section **12**. As the free end of barb **26** enters slot **14**, beveled end face **29** of the barb contacts catch **38** at lip **40** and cams the free end of the catch rearwardly, further compressing resilient member **44**, until lip **40** slides over the outer corner of end face **29** and is urged forwardly into locking engagement with insert part **31** of the barb. During entry of the free end of barb **26** into slot, the end portion of resilient member **36** which projects beyond inner face **32** of the barb contacts base part **18** of the body section

12 and is compressed. When the weapon head enters a target, projection 42 of catch 38 engages a portion of the target and is pivoted rearwardly with respect to body section 12 causing the disengagement of lip 40 of the catch from insert part 31 of the barb. Barb 26 is then forced outwardly from its closed position by resilient member 36.

Another embodiment of the weapon head of this invention is illustrated in FIG. 5. The weapon head of this embodiment is of similar construction as the weapon head embodiment illustrated in FIGS. 1—4 with the exception that a spring catch is substituted for the pivoted catch 38 and resilient biasing member 44. Body section 12 includes a portion 49 which is reduced in cross section and which extends rearwardly from a position which is just forward of barb inset part 31 and which is defined by an annular shoulder 58 to a position which terminates just forwardly of end face 50 of the body section and which is defined by an annular flange 52. A helical spring 54 surrounds reduced portion 49 and has one end abutting flange 52 thereof and its opposite end abutting shoulder 58 and overlying inset part 31 of the barb so as to retain the barb in its closed position. The outer transverse dimension of spring 54 preferably exceeds the maximum outer diameter of body section 12 so as to provide a laterally protruding part which engages the target as the spear enters thereinto and causes compression of spring 54 and the release of barb 26. When cocking barb 26, the beveled end face 29 of the barb contacts the forward end of spring and cams the spring rearwardly until the forward spring end is lockingly urged over inset part 31 of the barb.

What I claim is:

1. A head for a spear or like weapon comprising a tip section and a body section extending rearwardly from said tip section, said body section including side and base parts defining a longitudinal slot therein, an elongated barb received within said slot and having a forward end portion pivotally connected said body section, said barb including an inner side edge face and being swingable about its pivot connection between a closed position in which said barb is substantially received within said slot and an open position in which said barb extends laterally outwardly from said body section, said inner side edge face having a lateral bore therein positioned rearwardly of the pivot connection of said barb, a resilient member for urging said barb into its path of swing from its closed position having one end part disposed within said lateral bore and another end part projecting beyond the inner side edge face of said barb and engaging the base part of said body section so as to be placed in compressed engagement between said body section and said barb when said barb is in its closed position, a catch attached to said body section and being movable substantially fore and aft relative thereto into a lock position in which said catch projects into the path of swing of said barb to engage and retain said barb in its closed position, said catch being forwardly biased into its lock position and having a part which projects laterally outwardly from said body section and which when said head enters a target engages said target to cause said catch to move from its lock position out of the path of swing of said barb thereby permitting said barb to swing into its open position.

2. A head for a spear or like weapon comprising a tip section and a body section extending rearwardly from said tip section, said body section having a longitudinal slot therein, an elongated barb received within said slot and having a forward end portion pivotally connected to said body section, said barb being swingable about its pivot connection between a closed position in which said barb is substantially received within said slot and an open position in which said barb extends laterally outwardly from said body section, a biasing means for urging said barb in to its path of swing from its closed position, said body section including a laterally projecting part adjacent its rear end, a helical spring surrounding said body and having one end engaging the projecting part of said body section and its other end projecting into the path of swing of said barb to engage the free end of said barb, said other spring end normally retaining said barb in its closed position and including parts engageable with a target as said spear head enters said target to cause said other spring end to shift rearwardly and become disengaged from said barb, thereby allowing said barb to swing into its open position,

3. The weapon head of claim 2 wherein said barb includes a shoulder engageable by said other spring end to retain said barb in its closed position and a cam surface engageable with said spring as said barb is swung from its open position to its closed position, said barb cam surface being adapted to compress said spring and urge said other spring end rearwardly until said barb reaches its closed position and then release said spring to permit said other spring end to engage said barb shoulder.

4. A head for a spear like weapon comprising a tip section and a body section extending rearwardly from said tip section, said body section having a longitudinal slot therein, an elongated barb received within said slot and having a forward end portion pivotally connected to said body section, said barb being swingable about its pivot connection between a closed position in which said barb is substantially received within said slot and an open position in which said barb extends laterally outwardly from said body section, a biasing means for urging said barb into its path of swing from its closed position, a catch pivotally connected to said body section rearwardly of said barb and being movable substantially fore and aft relative thereto into a lock position in which said catch projects into the path of swing of said barb to engage and retain said barb in its closed position, said catch having a part which projects laterally outwardly from said body section and which when said head enters a target engages said target to cause said catch to move from its lock position out of the path of swing of said barb, said catch including portions projecting into a bore located within said body and extending rearwardly of said catch, a resilient member disposed within said bore and abutting said catch to normally urge said catch into its lock position, said bore being internally threaded and adapted to receive a complementally threaded and portion of a shaft which when turned into said bore will abut said resilient member and cause its compression between said shaft and catch, said resilient member being yieldable upon engagement of the projecting part of said catch with said target to permit said catch to move from its lock position out of the path of swing of said barb.