UNITED STATES PATENT AND TRADEMARK OFFICE

BEFORE THE PATENT TRIAL AND APPEAL BOARD

BOWMAR ARCHERY LLC., Petitioner,

v.

VETERAN'S INNOVATIVE PRODUCTS, LLC, Patent Owner

Inter Parties Review No.: IPR2024-00401

Patent No.: 8,043,177

Filing Date: July 7, 2008

Issue Date: October 25, 2011

PATENT OWNER'S RESPONSE

(Corrected Table of Contents)

TABLE OF CONTENTS

I. Introduction 5

II. Background.....6

A. Bowhunting, Broadheads, and State of the Art prior to the ’177 Patent.....6

1. Bowhunting and Lethality.....6

2. Broadheads and State of the Art as of 2008.....8

B. The ’177 Patent.....14

1. Subject Matter.....14

2. Claims at Issue in the ’177 Patent.....17

3. Person of Ordinary Skill in the Art.....20

4. Construction of Relevant Claim Terms 20

III. Legal Standard for Invalidation of a Patent Claim.....21

A. Dr. Kuhn failed to apply the POSITA standard and his opinions should be ignored. 22

IV. Vandewater Does Not Anticipate Claims 11-12, 15, or 17 (Ground 2).....23

A. Overview of Vandewater.....23

B. Vandewater’s Fourth Embodiment is not Prior Art 28

C. Vandewater fails to disclose “at least one biasing member biasing the first and second blade members towards the extended positions.” 29

V. Petitioner’s Arguments that Lint Anticipates, or alternatively renders obvious, claims 1-4, 7, 9, 11-12, 15, or 17 are not persuasive (Grounds 1 and 3).....34

A. Overview of Lint.....34

B. Lint does not anticipate the ’177 Patent claims.....37

1. Lint does not disclose “blade members” as required by independent claims 1 and 11. 37

2. Lint does not disclose “the biasing member being the only element operable to hold the blade members in the extended position”.....42

C. Claims 1-4, 7, 9, 11-12, 15, or 17 are not obvious by Lint alone or in further view of Minisini or Krieger (Ground 3).....43

1. Overview of Krieger 43

2. Overview of Minisini 46

3. A POSITA would not add a blade member to the barb of Lint, either through the teachings of Lint alone, or in combination with Krieger or Minisini 48

4. Petitioner fails to establish the requirements for obviousness by a preponderance of the evidence. Petitioner cannot establish claims 1-4, 7, 9, 11-12, 15, or 17 are obvious. 53

VI. Petitioner's Argument that Hendricks renders obvious, claims 11-12, 15, and 17 is not persuasive (Ground 4) 53

A. Petitioner fails to show how the barb of Hendricks qualifies as a blade member 53

B. Petitioner fails to show why the additional second barb (blade member) would be obvious.....54

VII. Liechty II Does Not Anticipate Claims 1-4, 9, 11-12, or 17 (Ground 5) 56

A. Overview of Liechty II. 56

B. Liechty II does not disclose a "blade member having a forward end pivotally interconnected with the ferrule body" or "at least one biasing member biasing the first and second blade members towards the extended positions" 59

C. Liechty II does not disclose "the biasing member being the only element operable to hold the blade members in the extended position" 65

VIII. Conclusion 66

LIST OF EXHIBITS

Exhibit Number	Exhibit Title
2006	Merriam-Webster's Advance Learners English Dictionary (2008) – "blade"
2007	Merriam-Webster's Advance Learners English Dictionary (2008) – "barb"
2008	Declaration of Wayne Willkomm
2009	Shooter's Bible Guide to Bowhunting (Exhibit 4 to Cross Examination of Todd Kuhn, Ph.D.)
2010	Transcript of the September 13, 2024 Cross Examination of Todd Kuhn, Ph.D.
2011	Meriam-Webster – "barb" (last accessed September 22, 2024)
2012	IDAHO ADMIN CODE r.13.01.08 410
2013	North Dakota Game and Fish
2014	U.S. Pat. No. 6,695,726 (Kuhn) (Exhibit 7 to Cross Examination of Todd Kuhn, Ph.D.)

I. INTRODUCTION

On July 2, 2024 the Board instituted this *Inter Partes* Review on all grounds asserted by Petitioner:

Ground	Reference(s)	Claims	Basis
1	U.S. Patent No. 3,168,313 ("Lint") (Ex. 1002)	1-4, 7, 9, 11-12, 15, and 17	35 U.S.C. § 102
2	U.S. Patent No. 8,016,704 ("Vandewater") (Ex. 1003)	11-12, 15, and 17	35 U.S.C. § 102
3	Lint alone or in further view of U.S. Patent No. 2,806,317 ("Minisini") (Ex. 1005) and U.S. Patent No. 2,212,345 ("Krieger") (Ex. 1006)	1-4, 7, 9, 11-12, 15, and 17	35 U.S.C. § 103
4	U.S. Patent No. 3,600,835 ("Hendricks") (Ex. 1013) alone or in further view of the knowledge of a person having ordinary skill in the art	11-12, 15, and 17	35 U.S.C. § 103
5	U.S. Patent No. 6,287,224 ("Liechty, II") (Ex. 1012)	1-4, 9, 11-12, 15, and 17	35 U.S.C. § 102

The Board only reviewed Petitioner's arguments concerning Ground 2 related to Vandewater and heavily relied on Petitioner's unrebutted expert declaration from Todd Kuhn, Ph.D. in instituting this proceeding. Paper 7 ("Institution Decision"). The Board elected to institute on all grounds with one Administrative Patent Judge dissenting.

Since the Institution Decision, Patent Owner retained Wayne Willkomm as an expert witness. Mr. Willkomm is a ballistics expert by training with over 40 years of experience in broadhead usage, analysis and development. Furthermore, Patent Owner cross examined Petitioner's expert and learned Petitioner's expert could not define a barb or blade member, grossly misunderstood how Lint operated, failed to understand the biasing elements of Vandewater, ignored the express teachings Liechty II, and used the '177 Patent as a roadmap to determine obviousness. In light of this additional evidence, Petitioner fails to meet its burden in proving claims 1-4, 7, 9, 11-12, 15 and 17 of the '177 Patent are invalid by a preponderance of the evidence.

II. BACKGROUND

A. Bowhunting, Broadheads, and State of the Art prior to the '177 Patent

1. Bowhunting and Lethality

Among the earliest archeologist diggings, chronicling many thousands of years, evidence of humanoid hunters has been uncovered among bones of ancient quarry in the form of projectiles launched in various ways. Ex. 2008, Decl. Wayne Willkomm at ¶ 22. Initially, just the tips of the projectile shafts were sharpened to affect the killing. *Id.* Then, two-edged worked stone tips were added by trial and error to the shafts, accomplishing more effective and efficient killing. *Id.* These knapped tips were broader than the projectile shafts and became known as

"broadheads." *Id.* This term has served well down through the years from those initial points of stone or bone to the present. *Id.* The material of broad heads changed with emerging human knowledge from the ancient historical uses of copper, bronze, and iron to the more modern materials of steel and aluminum. *Id.*

Early broadheads were limited in design due to the limitations of the bow and the amount of kinetic energy generated. Ex. 2008 at ¶ 23. Once improvements to launching were made, a third edge was added to the existing broadheads to create additional bleeding which improved recovery of quarry. *Id.* Early hunters learned from trial-and-error experience, long before formal knowledge that cutting, rather than tearing tissue, maximizes blood flow and loss, hunters knew to make the edges, as sharp as possible. *Id.*

Design and development of broadheads generally focused on humanely shooting the quarry which in turn increases recovery. Ex. 2008 at ¶ 24. While bowhunters and broadhead manufactures use terms such as lethality of a broadhead, the primary goal is recovery of the quarry. *Id.* In virtually every shot, the quarry will run for some distance after being hit with the arrow. *Id.* However, the distance the quarry covers and time of survival depends greatly on the placement of the shot and the type of broadhead used. *Id.* For example, a deer that is shot with any type of broadhead through the stomach will usually die from the wound but may survive for hours or days making recovery of the deer virtually impossible. *Id.* However, if the

deer is shot through both lungs with the broadhead creating an entry wound and exit wound, the deer is unlikely to survive more than a few seconds. *Id.* In that situation, the deer does not run very far making recovery highly probable. *Id.* Generally, a goal of bowhunting is to create a wound that provides for quick and substantial blood loss. *Id.* There are multiple factors that go into recovery of quarry to include shot placement, alertness of the deer, and most importantly for the purposes of the declaration, the design of the broadhead. *Id.*

2. Broadheads and State of the Art as of 2008

With the goal in mind of generating substantial blood loss in the quarry, bowhunters are always seeking broadheads (and bows) that can deliver an arrow that can penetrate the quarry and have enough energy to pass through the quarry and generate an exit wound. Ex. 2008 at ¶ 25. While this is the goal, it is challenging for a broadhead to penetrate fur, skin, muscle, and bone, such as ribs, at the entrance and then pass through the same sequence in reverse for the exit wound. *Id.*

Bowhunting developed significantly in the 1900s in both broadhead design and the development of the compound bow. Ex. 2008 at ¶ 26. However, generating a broadhead with enough kinetic energy at impact and with enough momentum energy to travel through the quarry remained elusive for consistent shots. *Id.*

At the time of the ’177 Patent, there were generally several types of broadheads including the fixed blade, cut-on-contact, and mechanical. Ex. 2008 at

¶ 27. While all these blades had positives, each have substantial negatives and did not reliably achieve the goal of penetrating the quarry with enough energy to pass through the quarry to generate an exit wound resulting in substantial blood loss. *Id.*

A fixed blade broadhead has at least one blade fixed in place which is not intended to move during flight or upon penetration into a target. Ex. 2008 at ¶ 28. The blades are usually removable allowing them to be replaced when not in use. One advantage of a fixed blade broadhead, is that they cause maximum circumferential damage to the near side entry layer of the quarry from which blood may flow out. Id. This increases recovery of the quarry. Id. However, fixed blade designs lose a lot of energy upon passing through, or around, the rib structures which results in the failure of the arrow to penetrate deeply into the quarry. Id. As a result, a fixed blade broadhead does not reliably have the kinetic energy to collapse the far side lung which significantly reduces the lethality of the arrow to the point of not recovering the quarry. Id.

A cut-on-contact broadhead has at least one edge that immediately begins cutting the target upon initial contact. Ex. 2008 at ¶ 29. Non-cut-on-contact broadheads do not have such an edge and commonly have a semi spherical tip with a point that enters into the target upon initial contact. *Id.* The cutting edge or edges on the non-cut-on-contact broadheads are set back on the ferrule and do not contact the target upon initial contact. *Id.* An advantage of cut-on-contact broadheads is that

they utilize less energy to initially penetrate the near side layers prior to contact with bone. *Id.* However, a cut-on-contact broadhead has difficulty penetrating bone or passing by bone.

A mechanical broadhead has at least one component designed to move during function. Ex. 2008 at ¶ 30. There are numerous types of mechanical broadheads but the more common mechanical broadheads concern expanding blade members. *Id.* Generally, mechanical broadheads use less energy to pass through the near side layers of the quarry as it has a smaller footprint than fixed blade or cut-on-contact broadheads. *Id.* Once the mechanical broadhead passes through the initial layers and enters the thoracic cavity of the quarry, the blades expand creating more damage by slicing more tissue to generate more blood flow. *Id.* However, a significant disadvantage of mechanical broadheads is the amount of energy required to move the components during function which results in a loss of momentum/energy. *Id.* This loss of momentum/energy typically prevents the mechanical broadhead from penetrating the far side layers of the quarry to generate an exit wound. *Id.* Additionally, mechanical broadheads, due to the expanded and large footprint once in the expanded state, have difficulty passing through or by bone on the far side layers. *Id.* As Dr. Kuhn pointed out in his book the Shooter's Bible to Guide Hunting, mechanical broadheads require a substantial amount of kinetic energy to function properly and generally require a compound bow to generate such energy.

Id.; Ex. 2009 at 99. The amount of energy necessary for correct operation of a mechanical broadhead is another disadvantage. Ex. 2008 at ¶ 30.

The broadhead industry tried multiple different approaches to improve the function and design of mechanical broadheads to create a higher recovery rate of quarry. Ex. 2008 at ¶ 31. As Dr. Kuhn acknowledges in the Shooter's Bible to Guide Hunting and as clarified in his deposition, there were not many innovations in terms of broadhead design after the 1970s with improvements generally relating to materials used. Ex. 2009 at 94; Ex. 2010, Cross-Examination of Dr. Todd Kuhn, at 54:24-56:24. Patent Owner's expert agrees with Dr. Kuhn that the Atom broadhead, developed by the Patent Owner, was one of the few innovative designs made during this time period. Ex. 2010 at 35:4-8. However, the atom broadhead's innovative design was intended to slide by bone, such as ribs, rather than penetrate through the bone. Other inventors, including products embodied by Vandewater and Liechty II were intended to slide around bone versus through bone.

Dr. Kuhn's assessment of the Grim Reaper mechanical broadhead, as embodied by the Liechty II patent is misleading. Ex. 2008 at ¶ 32; s*ee generally* Ex. 2010 at 58:1-59:18. Dr. Kuhn fails to differentiate penetrating through bone on the near layers of the quarry from penetrating the bone on the far layers of the quarry. *Id.* The design of the Grim Reaper, having a very wide footprint of expanded blades is highly unlikely to pierce the far side bones. *Id.* There is an important distinction

between which bone may be penetrated through, or slide around, as generating an exit wound is critical for increased recovery rate of quarry. *Id.*

At the time of the invention for the ’177 Patent, there remained a significant need to develop a broadhead that increased the recovery of quarry, especially larger quarry such as deer, elk, sheep, goats, and bear. Ex. 2008 at ¶ 33. Mechanical broadheads, while capable of passing through near layers of quarry, including bone, and capable of inflicting substantial damage with blades deployed in an open position, had substantial difficulty passing through the far layers including bone, to generate an exit wound. *Id.* The strategies to avoid bone, or slide by bone, as offered by Vandewater, failed to solve these problems. *Id.* The prior art relied on by Petitioner, and as explained herein, all failed to solve this need. *Id.*

Some of the prior art relied on by Petitioner and Dr. Kuhn (Minisini, Krieger, Hendricks, to an extent Lint) relate to arrows used in fishing versus hunting game like deer or elk. Ex. 2008 at ¶ 34. While there is some similarity between the fields, mainly the desire to pierce flesh with a sharp object, the realities of fishing versus hunting larger quarry are starkly different. *Id.* For example, fish are generally thin compared to larger animals thus the energy necessary to completely pierce through a fish is far less than the energy to fully pierce larger quarry. *Id.* Second, the physical structures of a fish vary greatly from larger game in that fish do not have hard or dense bones. *Id.* Thus, generating an entry wound, piercing fish bones and flesh, and

generating an exit wound requires very little effort compared to that of larger quarry. *Id.* For example, there is nothing in a fish that is comparable in density and strength to a deer's scapula. *Id.* There is very little innovation necessary for arrow heads, or broadheads, to pierce through a fish as this was easily accomplished by ancient hunters. *Id.* Instead, innovation for arrows used for fishing centered on retractable barbs to help remove the arrow from the fish. *Id.* The references, Minisini, Krieger, Hendricks and Lint references, all dated between 1938 and 1968, teach innovations concerning retraction of a barb or barbs to ease the removal of the arrow from the fish. *Id.* All these innovations, in fish arrowheads, require the arrow to fully pierce the fish such that the arrowhead has exited the fish. *Id.*

In contrast, innovation for broadheads for larger quarry focuses on piercing bone, sliding around bone, and increases energy. Ex. 2008 at ¶ 35. The '177 Patent, Vandewater, and Liechty II are all designed to improve hunting larger quarry and would have no relevance to hunting fish. *Id.* Furthermore, the use of barbs in hunting larger quarry such as deer and elk, is strongly disfavored as it is not humane. *Id.* Many states have banned barbed broadheads from use on big game but still permit their use on fish. *Id; see, e.g.,* IDAHO ADMIN CODE r.13.01.08 410 (attached as Ex. 2012); Ex. 2013 North Dakota Game and Fish. The Idaho Administrative Code bans the use of "arrows or bolts having barbed broadheads" on "big game animals" and defines a barbed broadhead as "a broadhead which has any portion of the rear edge

of the broadhead forming an angle less than ninety (90) degrees with the shaft or ferrule." Ex. 2012. Barbed broadheads have been disfavored in the hunting of big game for decades as any bowhunter knows including Dr. Kuhn. Ex. 2008 at ¶ 35. As a result, fish hunting arrowheads are not relevant to the development of broadheads for big game. *Id.* The technical challenges are very different, the energy forces are different, purposes are different, and structures are different. *Id.*

B. The '177 Patent

1. Subject Matter

The purpose of the invention underlying the '177 Patent is to make an improved arrowhead having outwardly biasing collapsible blade members that retract, or held in retracted position, as the arrowhead passes through bone and then expand once the arrowhead reenters flesh to maximize cutting. Ex. 1001 at 1:7-10. The '177 Patent discloses four embodiments. All four embodiments share similar structure to include a ferrule body with a pointed tip on the forward end and an attachment portion at the rearward end, at least two blade members having a first end pivotally connected to the ferrule and a second end, a retracted position in which the second end of the blade member is positioned close to the ferrule, an extended position in which the second end of the blade member is positioned further away from ferrule, a biasing structure, and a retaining element. The differences in the

embodiments generally relate to the biasing structure to move the at least one blade member from the retracted position to the extended position.

The first embodiment discloses a retaining element to hold the blade members in the retracted position and a spring that biases the blade member outward. Each blade member has an arm 42 that extends into bores 18 of the ferrule 12 and is biased outward by a spring 40 within the bore 18. The retaining element 50 is removed when the broadhead punctures a target causing the blade members to move into the expanded position. Ex. 1001 at 3:54-57; 4:5-11. If the arrowhead encounters bone, such as a shoulder blade, the blade members move into the retracted position as the force against the bone is greater than the biasing force of the spring. Ex. 1001 at 4:11-13. Once the broadhead emerges from the bone, the blade members move to the extended position as the biasing force of the spring is greater than the force against the blade members thus "maximizing the cutting surface of the arrowhead 10 through the soft flesh of the animal." Ex. 1001 at 4:13-24. Fig. 1 shown below details the first embodiment in the retracted position:

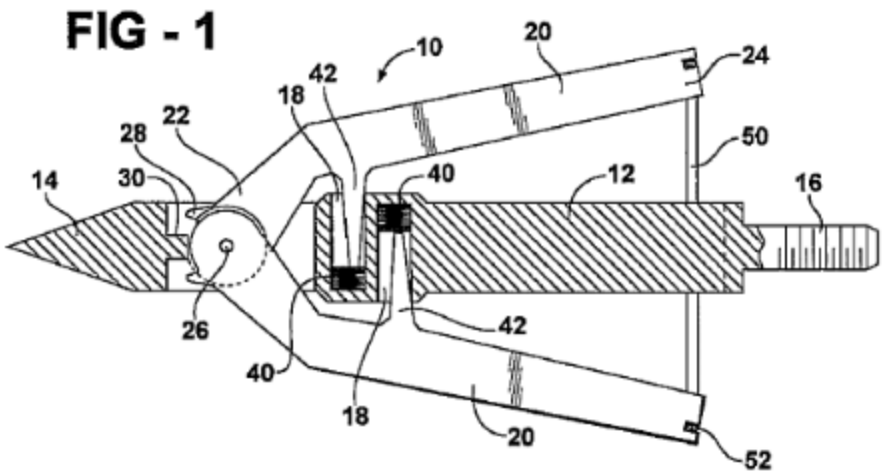

The second embodiment operates generally the same as the first embodiment but articulating arms are instead connected to a sliding element 66 that is biased by a singular spring. Ex. 1001 at 4:25-35. Fig. 3 shown below details the second embodiment in the retracted position:

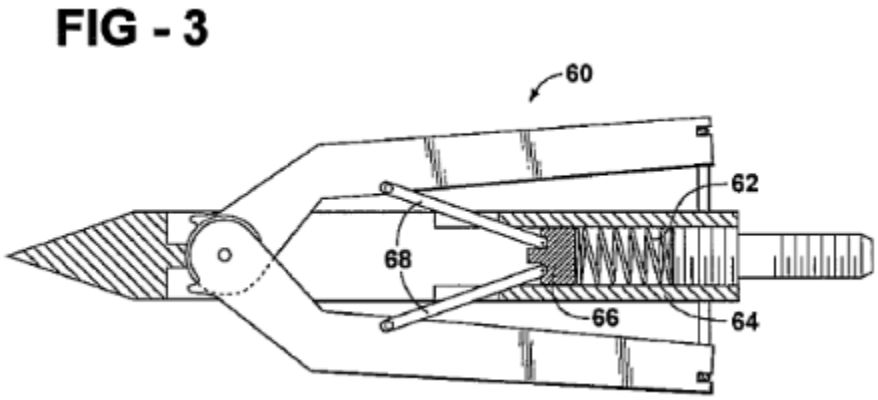

The third embodiment has the same components discussed above but utilized a biasing member (spring) adjacent the front end of the ferrule that engages a sliding element that physically interacts with tabs on the blade members. Ex. 1001 at 4:36-52. As the sliding member is biased away from the front of the ferrule, it engages

the tabs which rotated the blade members into the extended position. *Id*. Fig. 5 shown below details the third embodiment in the retracted position:

FIG - 5

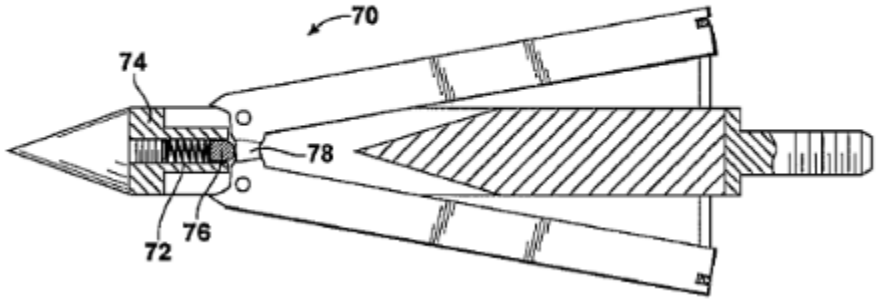

The fourth embodiment operates similar to the first embodiment but uses leaf springs instead of arms that are biased within bores. Ex. 1001 at 4:53-58. Fig. 7 shown below details the fourth embodiment in the retracted position:

FIG - 7

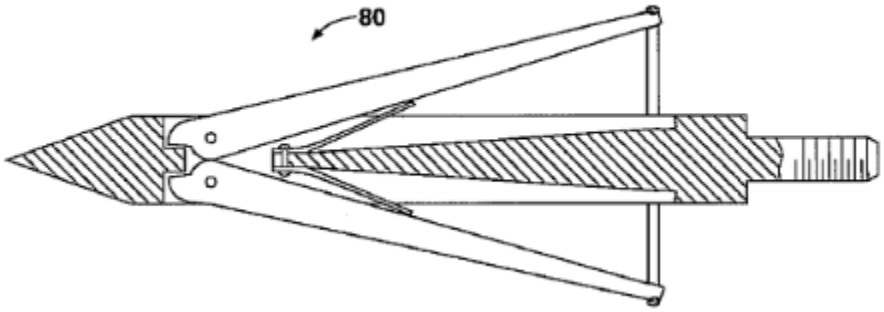

The blade member may take multiple shapes as disclosed in Figs. 1-8.

2. Claims at Issue in the '177 Patent

Petitioner seeks invalidation of Claims 1-4, 7, 9, 11, 12, 15, and 17. Claims 1 and 11 are the only independent claims challenged:

1. A broadhead for an arrow having a shaft, the broadhead comprising:

a ferrule having a rearward end configured for attachment to the shaft and an opposite forward end with a ferrule body extending therebetween;

a first blade member having a first end pivotally interconnected with the ferrule body and an opposite second end, the first blade member having a retracted position wherein the second end is spaced from the ferrule body at a first distance and an extended position wherein the second end is spaced from the ferrule body by a distance which is greater than the first distance;

a second blade member having a first end pivotally interconnected with the ferrule body and an opposite second end, the first blade member having a retracted position wherein the second end is spaced from the ferrule body at a first distance and an extended position wherein the second end is spaced from the ferrule body by a distance which is greater than the first distance; and

at least one biasing member biasing the first and second blade members towards the extended positions, the biasing member being the only element operable to hold the blade members in the extended position.

11. A broadhead for an arrow having a shaft, the broadhead comprising:

a ferrule having a rearward end configured for attachment to the shaft and an opposite forward end with a ferrule body extending therebetween, the forward end of the ferrule defining the forward tip of the arrow and being fixed with respect to the ferrule body;

a first blade member having a forward end pivotally interconnected with the ferrule body and an opposite rearward end, the first blade member having a retracted position wherein the rearward end is spaced from the ferrule body at a first distance and an extended position wherein the rearward end is spaced from the ferrule body by a distance which is greater than the first distance, the pivotal

interconnection between the first blade member and the ferrule body being at a fixed position relative to the ferrule body;

a second blade member having a forward end pivotally interconnected with the ferrule body and an opposite rearward end, the second blade member having a retracted position wherein the rearward end is spaced from the ferrule body at a first distance and an extended position wherein the rearward end is spaced from the ferrule body by a distance which is greater than the first distance, the pivotal interconnection between the second blade member and the ferrule body being at a fixed position relative to the ferrule body; and

at least one biasing member biasing the first and second blade members towards the extended positions.

While the independent claims are very similar, there are several noteworthy differences. First, claim 1 requires the biasing member to be "the only element operable to hold the blade members in the extended position" whereas claim 11 does not have this element. Second, claim 1 states the blade members have a "first" end and a "second" end whereas claim 11 states the blade members have a "forward" end and a "rearward" end. Third, claim 11 requires the forward end and tip of the arrow is fixed in respect to the ferrule body and the pivotal interconnection between the blade members and the ferrule body is fixed in respect to the ferrule body. Those elements are not present in claim 1.

The depending claims from independent claim 1 provide several structural elements indicating positions of the first end, second end, and distance from the pivotal connection.

3. Person of Ordinary Skill in the Art

A person of ordinary skill in the art ("POSITA") around the time of the filing of the '177 Patent would have would have a minimum of four years of formal mechanical engineering (or equivalent) and two years experience with developing broadheads. Ex. 2008 at ¶¶ 50-52.

4. Construction of Relevant Claim Terms

Claims should be construed "in accordance with the ordinary and customary meaning of such claim as understood by one of ordinary skill in the art and the prosecution history pertaining to the patent." 37 CFR § 42.100(b).

i. "blade member"

Claims 1-17 utilize the term "blade member." Ex. 1001. A POSITA would understand the plain and ordinary meaning of blade member to have a cutting edge or flat sharp part. Ex. 2008 at ¶ 53; s*ee e.g.*, Ex. 1003 at 3: 37-38; Ex. 2006. A POSITA would further understand the blade member needs to have material characteristics to allow structural strength and retain structural integrity to hold a sharp edge while not deforming inelastically during function. Ex. 2008 at ¶ 53. The specification supports this meaning as it routinely references cutting the flesh with the blade member:

- "to increase the amount of flesh cut by the blade members" Ex. 1001 at 1:9-10.

- "As the tip 14 and blade members 20 penetrate the skin of the animal . . ." Ex. 1001 at 4:5-6.

- "Thus, the blade members 20 are in the extended position on either side of the bone to maximize the cutting surface of the arrowhead 10 through the soft flesh of the animal." Ex. 1001 at 4:21-24.

- Figures 1-8 showing cross sections of the embodiments which reveals a cutting edge of blade members. Ex. 1001 at Figs. 1-8.

ii. "biasing member"

Claims 1-17 utilize the term "biasing member." Ex. 1001. A person of ordinary skill in the art would understand the plain and ordinary meaning of a biasing member to mean a structure that pushes against another structure. Ex. 2008 at ¶ 54; s*ee e.g.*, Ex. 1003 at 3:63-66. The specification supports this meaning as it routinely references the biasing member as "coil springs" that "push" the arms of the blade members out or as a leaf spring. Ex. 2008 at ¶ 54; Ex. 1001 at 3:35-44; 4:58-62. A biasing member is not simply a retaining element. Ex. 2008 at ¶ 54.

III. LEGAL STANDARD FOR INVALIDATION OF A PATENT CLAIM

Petitioner "shall have the burden of proving a proposition of unpatentability by a preponderance of the evidence." 35 U.S.C. § 316.

An anticipatory reference must disclose every limitation of the claimed invention. *In re Schreiber*, 128 F.3d 1473, 1477 (Fed. Cir. 1997). We must analyze prior art references as a skilled artisan would. To anticipate "there must be no

difference between the claimed invention and the reference disclosure, as viewed by a person of ordinary skill in the field of the invention" Scr*ipps Clinic & Res. Found. v. Genentech, Inc.*, 927 F.2d 1565, 1576 (Fed. Cir. 1991) overruled on other grounds by *Abbott Labs. v. Sandoz, Inc.*, 566 F.3d 1282 (Fed. Cir. 2009).

To determine obviousness under 35 U.S.C. § 103(a), the prior art must be compared to the claimed subject matter and determined if the differences would have been obvious to a person having ordinary skill in the art. *KSR Int'l Co. v. Teleflex Inc.*, 550 U.S. 398, 406 (2007). An invention "composed of several elements is not proved obvious merely by demonstrating that each of its elements was, independently, known in the prior art." *KSR*, 550 U.S. at 418. A determination of obviousness must include "articulated reasoning with some rational underpinning to support the legal conclusion of obviousness." *In re Kahn*, 441 F.3d 977, 988 (Fed. Cir. 2006).

A. Dr. Kuhn failed to apply the POSITA standard and his opinions should be ignored.

Here, Dr. Kuhn acknowledges he has more experience that his POSITA and that he used that experience drafting his declaration and coming to the conclusions he reached in it. Ex 2010 at 62:4-17. Thus, Dr. Kuhn's obviousness-based arguments are all improper as he considered them in view of his own extensive experience and not the experience of a POSITA.

IV. VANDEWATER DOES NOT ANTICIPATE CLAIMS 11-12, 15, OR 17 (GROUND 2)

A. Overview of Vandewater

Vandewater discloses four embodiments that provide various structures of a blade pivotally mounted to a body with a retaining mechanism designed to impede the pivotal movement of the blade. Ex. 1003 at 1:33-41. In the first two embodiments, Vandewater discloses a single blade that pivots around an axis point. *Id.* at 2:63-65; 5:51-56. In the reaming two embodiments, there are two blades that deploy and lock to form a singular blade structure. *Id.* at 6:45-48; 8:39-42. Unlike the ’177 Patent, the purpose of the Vandewater blades is not to collapse but to “pivot upon impact with the bone structure and thus allowing the arrowhead to continue penetration to one side of the bone structure.” *Id.* at 1:66-2:4.

The first (Figures 1-3) and second (Figures 4-6) embodiments are best illustrated by Figures 2 and 5 shown below. A singular blade member 12, 112 having a notch 24, 124 on its rear edge 22, 122 is pivotally mounted to the body at axis point 16, 116. Ex. 1003 at Figs 2 and 5. In the first embodiment, a retaining mechanism 20 is “biased or urged” against the notch 24 of the blade 12 by a biasing element 36. *Id.* at 3:2—8. The singular blade is held in the centered position during flight by the retaining mechanism which includes an engaging element 34 such as a ball bearing. *Id.* at 3:55-57; 4:27-29. Once one side of the blade strikes material that is of different density than the other side of the blade, the difference in pressure is sufficient to

generate a rotational pressure that overcomes the retaining mechanism and the blade pivots around the axis 16. *Id.* at 5:9-17. According to Vandewater, if the blade hits a bone on one side, the blade will pivot allowing the blade to slide along the bone and clear it. *Id.* at 5:20-21. The blade remains in this pivoted position until the second wing of the blade "encounters a greater resistance then the first blade wing." *Id.* at 5:34-38.

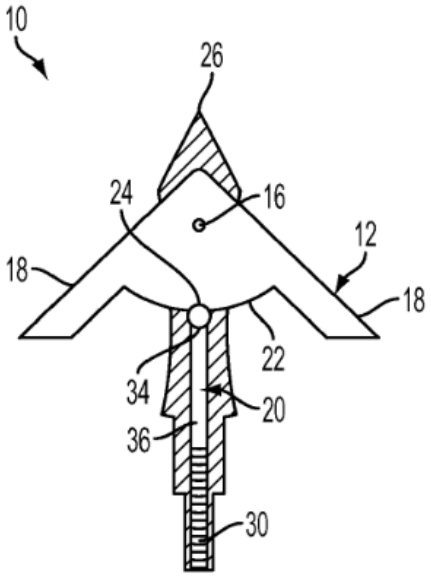

FIG. 2

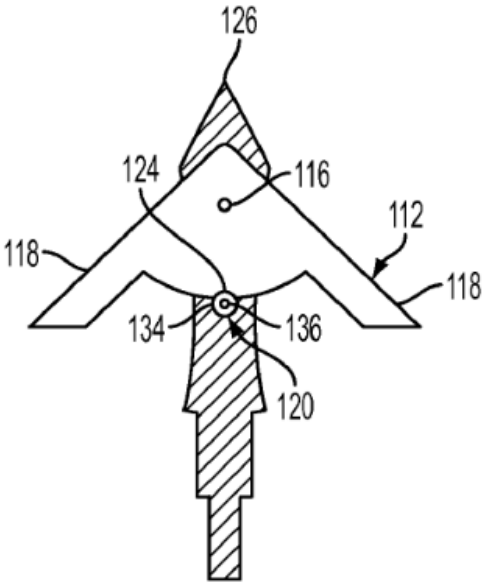

FIG. 5

The second embodiment (Figures 4-6) is structurally similar to the first embodiment but instead of an engaging element like the ball bearing, it discloses a retaining mechanism 120 comprising a wheel 134 made of a "flexible material, such as rubber, elastomeric material or the like." Ex. 1003 at 5:66-6:7. The rubber wheel holds the blade in place until rotational forces act on one side of the blade causing

the notch to disengage from the wheel. *Id.* at 6:24-31. Similar to the first embodiment, the blade remains in this pivoted position until a greater force causes the second wing of the blade to pivot back. *Id.*

The third embodiment (Figures 7-12) discloses two blade members 212, 213 pivotably mounted to the body 214 at axis 216. Ex. 1003 at 6:45-48. Each blade member 212, 213 has an opening lever 224, 225 "configured to convert the force of impact with an object, such as an animal, into pivotal motion of [the blade members] toward its open position." *Id.* at 7:9-13. Once the blades pivot towards an extended or deployed position, the interlocking tabs 222 of each blade member engage to lock the blades into an extended position. *Id.* at 7:26-28.

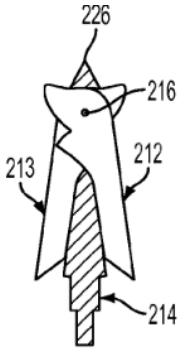

FIG. 10

FIG. 10A

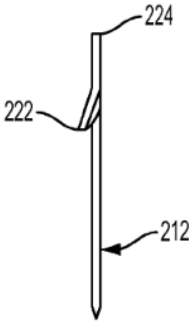

FIG. 10B

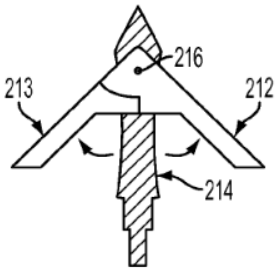

FIG. 11

"Once interlocked, the blades, acting as a unitary whole, may be acted upon by a retaining mechanism to generally retain the blades in a centered position." *Id.* at 7:30-32. Vandewater textually describes the *optional* inclusion of a "retaining mechanism . . . such as a biasing elements with a ball bearing or a spring wheel." *Id.* at 7:55-58. A POSITA would understand Vandewater is referencing the addition

of the mechanisms disclosed in the first and second embodiments to allow the unitary blade to pivot in response to contact with a harder material. Ex 2008 at ¶ 59.

Vandewater's fourth embodiment (Figures 15-20) is structurally different from the previous three embodiments. In the deposition, counsel and Dr. Kuhn referred to this fourth embodiment as the third embodiment. The fourth embodiment discloses two blade members 312, 313 having an elongate slot 312a, 313a extending from the midpoint to the forward end. Ex. 1003 at 9:1-5. An axis 316 is positioned within the elongate slots 312a, 313a and mounts the blades to the body 314. *Id.* Similar to the third embodiment, each blade member 312, 313 has an opening lever 324, 325. *Id.* at 9:19-26. In the closed position, the axis point is at the rearward end of the elongate slots 312a, 313a which puts the pivotal connection at the midpoint of the blade members 312, 313. *See* i*d.* at Fig. 17. A pivot limiter 317 is disposed within the body 314 and held in place by a guide pin 321. *Id.* at 8:42-47. Each blade member has a locking tab 322 which is substantially similar to the locking tab of the third embodiment. *Id.* at 9:54-65.

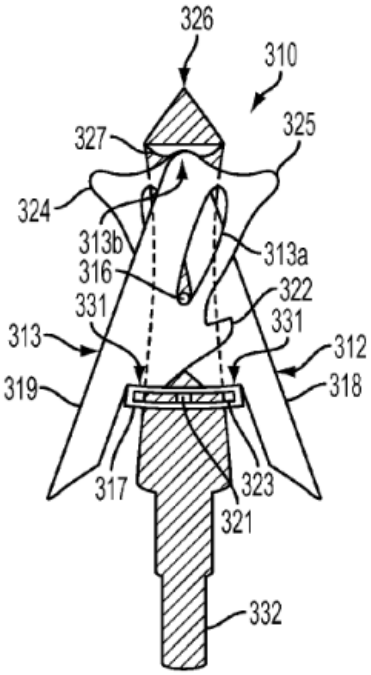

FIG. 17

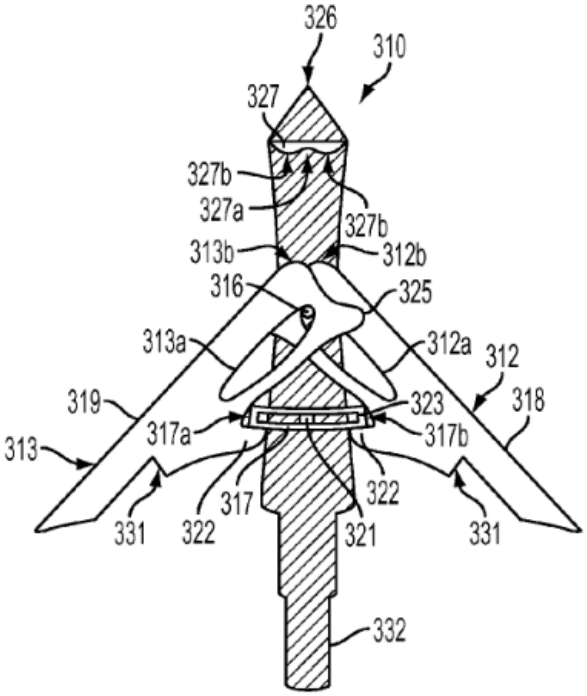

FIG. 18

When the fourth embodiment strikes a target, each blade member slides along the elongate slot 312a, 313a and pivots around the axis 316. Ex. 1003 at 9:34-48. The blades pivot and slide until the respective locking tabs 322 engage the pivot limiter 317 and become locked "to form a substantially unitary whole blade" such that the "two blades may pivot together about pivot pin 316 in the manner of a single blade." *Id.* at 9:54-65. The unitary blade may then freely pivot within the channel of the pivot limiter. *Id.* at 10:18-21. The fourth embodiment then operates the same as the previous embodiments with the blade pivoting in response to hitting a harder object on one side causing the blade to pivot in an effort to slide past bone. *Id.* at 11:18-21. Ex 2008 at ¶ 62.

B. Vandewater's Fourth Embodiment is not Prior Art

Petitioner states Vandewater, filed after the '177 Patent, is prior art because Vandewater claims priority to a provisional application that predates the '177 Patent and included the provisional application. Paper 1 at 10; Ex. 1004. Patent Owner does not dispute the priority claim for the first three embodiments of Vandewater. However, the fourth embodiment of Vandewater, characterized by Figures 17 and 18 shown below, were not included in the provisional application.

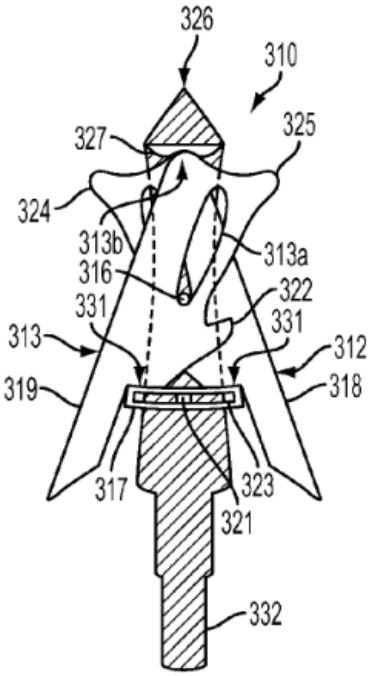

FIG. 17

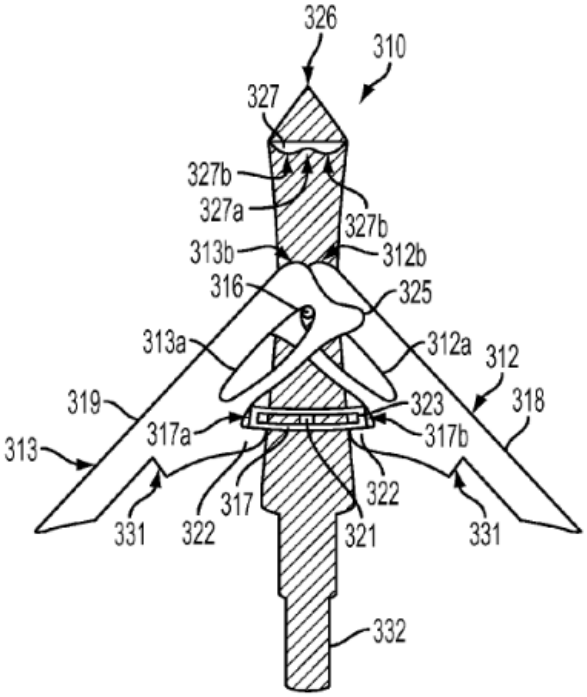

FIG. 18

The provisional application includes figures 1-12 which are similar to figures 1-12 of Vandewater along with disclosure discussing figures 1-12. However, the provisional application provides no disclosure for the fourth embodiment that is

characterized by the "elongate slot" and retaining element 317. As a result, the fourth embodiment of Vandewater is not prior art and cannot be considered in this *Inter Partes* Review.

> Under 35 U.S.C. § 119(e)(1), a patent that claims priority to a provisional application must have the same effect, as to such invention the provisional invention, as though filed on the date of the provisional application. Thus, as we have explained in the past, what is claimed by the patent application claiming priority to a provisional application must be the same as what is disclosed in the provisional specification

Endo Pharms., Inc. v. Actavis, Inc., 746 F.3d 1371, 1382 (Fed. Cir. 2014) (internal citations omitted). Thus, Petitioner and Dr. Kuhn's reliance on the fourth embodiment, and specifically the retaining element 317 is inapplicable to this IPR and should not be considered.

C. Vandewater fails to disclose "at least one biasing member biasing the first and second blade members towards the extended positions."

Independent claim 11 requires two blade members having a retracted position and an extended position with a biasing member biasing the blade members to the extended position. Vandewater does not teach this configuration and elements in any embodiment let alone in combination within the embodiments. Ex. 2008 at ¶ 63.

As stated above, Vandewater discloses a biasing member in reference to an engaging element designed to restrict the rotational movement of the singular blade and has *nothing to* do with biasing the blade members to an extended position. Ex. 2008 at ¶ 64. Instead, Vandewater teaches the use of interlocking tabs 222, 322 that

lock the blades in the extended position. *Id.* The retaining mechanism, having an engagement element biased by a biasing element, is not relevant until *after* the blades are locked and already in the extended position. *Id.*

Importantly, the first embodiment is the *only* embodiment that expressly discloses the engagement mechanism that includes biasing element. Ex. 2008 at ¶ 65. In the subsequent embodiments, as noted by Dr. Kuhn and the Board in instituting the IPR, Vandewater refers back to the discussion of the engagement mechanism in the third and fourth embodiments. *Id.;* Ex. 1003 at 7:55-58. This is key for two reasons. First, the first embodiment and second embodiment are singular blades and do not have a retracted position. Ex. 2008 at ¶ 65. Logically, the retaining mechanism with biasing element cannot have anything to do with biasing the blades to an extended position if there is no extended position. *Id.* Dr. Kuhn implicitly acknowledges the lack of an extended position in the first and second embodiments of Vandewater is in his deposition as he acknowledges Figure 7 of the third embodiment is the "retracted position" and Figure 8 discloses the "extended position" where the blades are "locked." *Id.*; Ex. 2010 at 101:13-21.

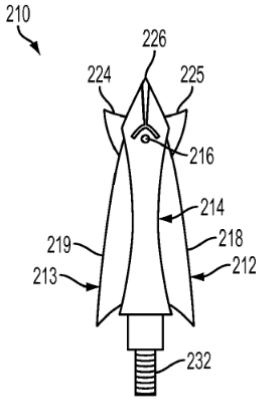

FIG. 7

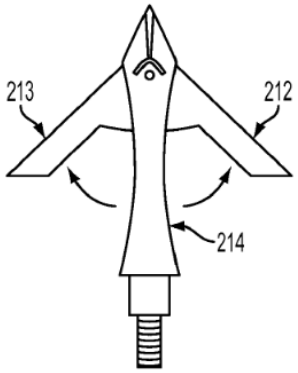

FIG. 8

Ex. 1003 at Figs. 7,8. Furthermore, Dr. Kuhn acknowledges the biasing element is biasing the ball bearing, not the blade. Ex. 2010 at 110:16-18.

Second, the third embodiment as noted by Dr. Kuhn, discloses a retracted position and extended position. Ex. 2008 at ¶ 66. However, Vandewater clearly states the addition of the retaining mechanism is *optional*. Logically, if the retaining mechanism is optional, yet the blades of the third embodiment move from a retracted to extended position, the retaining mechanism with biasing element has *nothing to* do with biasing the blade member to an extended position. *Id.* As already noted, the biasing element of Vandewater biases the ball bearing and if the ball bearing is optional, then biasing has no role in moving the blades to an extended position. *Id.*

A POSITA would understand that a retaining mechanism is not a biasing element. Ex. 2008 at ¶ 67. As discussed above, Vandewater provides no disclosure as to how the biasing element moves a blade to its extended position. *Id.* Instead, a POSITA would know the retaining mechanism is what it says, it helps retain the

singular blade structure in a centered deployment. *Id.* That force must be overcome before the blade may pivotably rotate. *Id.* This is opposite to what Dr. Kuhn and Petitioner argue. *Id.*

Inexplicably, Dr. Kuhn "draws in" a biasing element on his annotated drawing regarding the fourth embodiment of Vandewater. Ex. 2008 at ¶ 68. His annotated drawing of Figure 16 (displayed below right) fails to include any of the structural elements of the retaining mechanism with biasing element as disclosed in Figure 1 of Vandewater. *Id.* Dr. Kuhn relies on element 317 to support his claim of a biasing member but element 317 is expressly identified as a pivot limiter. *Id.*; Ex. 1003 at 10:3-5. The pivot limiter, as referenced in Fig. 16, acts as a static retaining element as it engages with locking tabs 322 on both blade members. Ex. 1003 at 10:13-21. Once locked to the pivot limiter, the blades "act[] as a unitary whole with the pivot limiter" and then rotate as a unit around the guide pin 321. *Id.* The pivot limiter is not a biasing member at all but merely a structural element to lock the tabs of the blade members. Ex. 2008 at ¶ 68. As noted supra, the retaining element, even if anticipatory, is not prior art.

If Dr. Kuhn were to add the retaining mechanism to the embodiment disclosed in Figure 16, he would have added the structure disclosed in Fig. 2 which is what Vandewater references. Ex. 2008 at ¶ 69. As already noted, the retaining mechanism

with biasing element has nothing to do with biasing blade members to an extended position. *Id.*

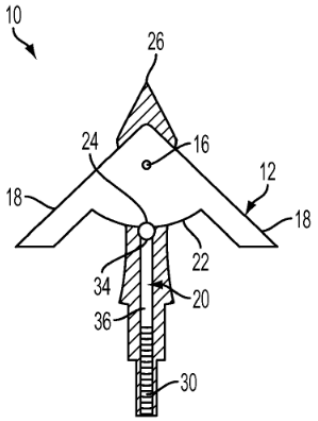

FIG. 2

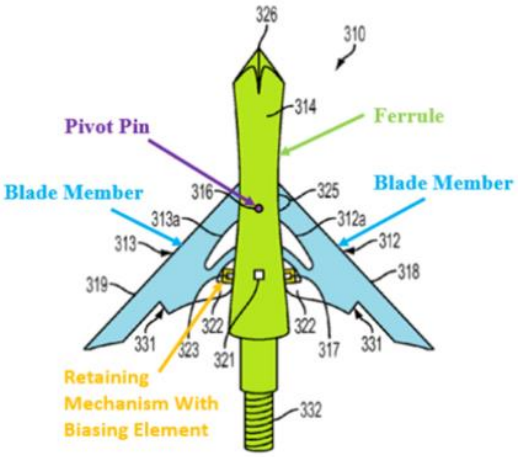

FIG. 16

Dr. Kuhn further confuses Vandewater by misapplying the operation of Vandewater. Ex. 2008 at ¶ 70. He claims the biasing element may rotate the blade to the left or right and this rotation means extended position. Ex. 2010 at 107:15-23. While this contradicts Dr. Kuhn's own deposition testimony and argument of Petitioner regarding the retracted and open deployment shown in Figures 7 and 8, it further highlights Dr. Kuhn's incorrect understanding of Vandewater. Ex. 2008 at ¶ 70. Vandewater expressly teaches the pivotal rotation occurs when one side of the blade strikes material that is of different density than the other side of the blade such that the force *overcomes* the retaining mechanism and the blade pivots around the axis 16. Ex. 1003 at 5:9-17. The blade remains in this pivoted position until the second wing of the blade "encounters a greater resistance then the first blade wing." *Id.* at 5:34-38. Thus, if one were to agree with Dr. Kuhn's position that pivotal

rotation of the singular blade satisfies the extended position of a blade member, the retaining mechanism with biasing element is *overcome* to achieve rotation, not moved by the biasing element. Ex. 2008 at ¶ 70.

Vandewater fails to disclose a biasing member that biases the first and second blade member towards the extended position. Thus, Vandewater fails to anticipate claims 11-12, 15, and 17.

V. PETITIONER'S ARGUMENTS THAT LINT ANTICIPATES, OR ALTERNATIVELY RENDERS OBVIOUS, CLAIMS 1-4, 7, 9, 11-12, 15, OR 17 ARE NOT PERSUASIVE (GROUNDS 1 AND 3)

A. Overview of Lint

Lint discloses a "hunting arrow with retractable barb units" designed for use on "target and hunting arrows" Ex. 1002 at 2:1-6. Lint acknowledges the prior art describes arrowheads that "positively hold[] pivoted barbs in open or laterally projecting position" but that no design provides a locking means for retracting the barbs "after the arrow has entered the body of the animal." *Id.* at 1:46-53. Notably, Lint discloses the damage caused by barbs when trying to remove the arrow from the animal's body. *Id.* at 1:53-62. Relatedly, Lint describes forcibly and locking the barbs in a retracted position when the arrow is used in target practice. *Id.* at 1:62-72.

The structure of Lint is the same regardless of the usage. It comprises a ferrule body with a tip, two retractable barbs having an inner barb portion and an outer barb portion, and a bore capable of receiving an arrow shaft. Ex. 1002 at 2:29-59. The

outer portions of the barbs, when in the retracted position, are contained within slots of the ferrule body. *Id.* at 2:44-46; Fig. 2. A spring is positioned within the bore of the ferrule body and extends between the tip and the inner barbs. *Id.* at 2:54-63. The position of the shaft in relation to the ferrule body determines whether the outer barbs are in the retracted position or open position. *Id.* at Figs. 2 and 3. The disclosure fails to disclose a cutting blade or sharp edge on any portion of the barbs. Ex. 2008 at ¶ 73.

In operation, the barbs are in the open position when shot for live game. Ex. 1002 at 2:59-64; Fig. 2. When the shaft is in the back position as shown in Figures 1 and 2, the spring biases the inner barbs against the shaft causing the outer barbs to be in the open or extended position. *Id.* at 2:59-64.

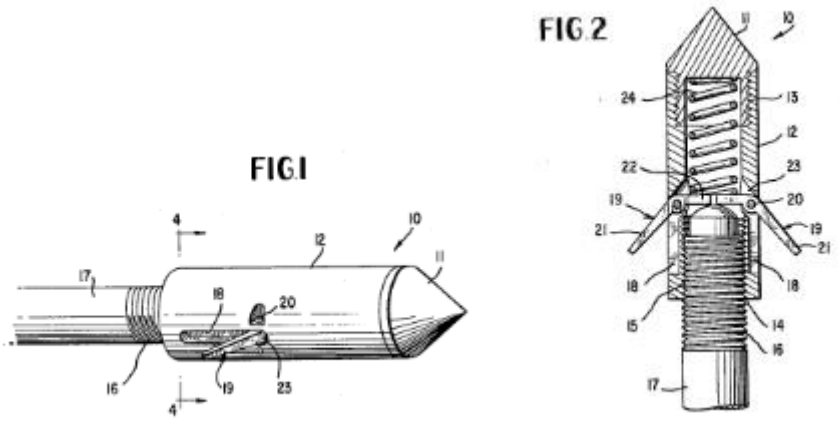

Id. at Figs. 1 and 2. As the arrow passes into the flesh of an animal,

> the initial impact on the outer portions 21 of the barbs 19 causes the barbs to be retracted into the slots 18 against the bias of the spring 24. After the arrowhead 10 has completely penetrated the flesh of an

> animal, the spring 24 forces the barbs 19 outwardly so as to retain the arrowhead within the animal.

Id. at 2:64-70. A POSITA would understand the barbs of Lint do not, completely, re-expand to the open position as the broadhead pushes through the quarry, due to resistance of internal layers of the quarry. Ex. 2008 at ¶ 74. If or when the broadhead passes through the entire quarry, then there are no more forces against the outer portion of the barbs thus allowing them to expand. *Id.* While it is possible the barbs will open some if the arrow remains embedded in flesh, depending on the density of the flesh, it will not be biased to the open position unless it has exited the quarry. *Id.* The biasing of the inner barbs is dependent on two elements 1) the spring and 2) the moveable position of the shaft. Ex. 1002 at 2:64-70.

To remove the arrow from the animal, the user screws the shaft into the ferrule body which forces the inner barbs forward causing the outer barbs to retract into the slots of the ferrule body. Ex. 1002 at 2:70-3:4; Fig. 3. A POSITA would understand from this description that the arrowhead generally must exit the quarry for the user to be able to hold the ferrule head and screw the shaft. Ex. 2008 at ¶ 75. Once screwed in, the outer barbs are completely positioned within the body prior to removal and are locked. Ex. 1002 at 2:70-3:4; Fig. 3.

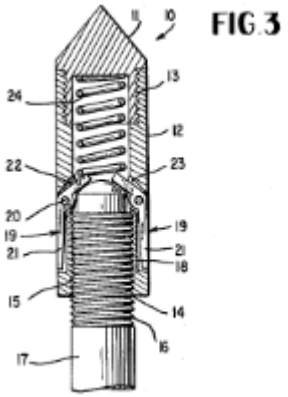

Id. at Fig. 3. Lint discloses the position of Figure 3 for use in target archery. *Id.* at 3:5-15.

B. Lint does not anticipate the ’177 Patent claims

1. Lint does not disclose “blade members” as required by independent claims 1 and 11.

Independent claims 1 and 11 of the ’177 Patent require first and second *blade* members; not first and second *barb* members. Ex. 1001 at claims 1 and 11. The ’177 Patent uses the plain and ordinary meaning of a blade member and a POSITA would clearly understand a blade member as defined herein. Ex. 2008 at ¶ 76.

In contrast, a POSITA would understand the barb of Lint to have its plain and ordinary meaning which is a projection extending backward from a point, having an angle of less than 90 degrees from the body, to prevent easy extraction. Ex. 2008 at ¶ 77; Ex. 2007; Ex 2011. Lint expressly describes the barb element as “project[ing] outwardly and rearwardly of the arrowhead body 12 when the barbs 19 are in the

open position as illustrated in Figure 2." Ex. 1002 at 2:46-48. Figure 2 clearly illustrates the plain and ordinary meaning of a barb.

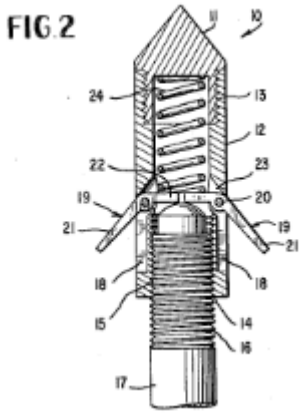

Id. at Fig. 2; Ex. 2008 at ¶ 77. The dictionary definition of a barb, as of 2008 and more recent internet dictionary, agree with a POSITA's understanding of the plain and ordinary meaning of barb and its use in Lint. *Id.*; Ex. 2007; Ex. 2011. Finally, the plain and ordinary meaning of barb is confirmed by state laws that ban barbs from use of hunting big game animals. Ex. 2008 at ¶ 77; Ex. 2012; Ex. 2013. The definition of barb has not changed for decades. Ex. 2008 at ¶ 77.

Similarly, the definition of a blade has also not changed in decades. Ex. 2008 at ¶ 78. A POSITA would fully understand the term blade member as used in the '177 Patent means having a cutting edge or a flat sharp part. *Id.*

Petitioner and its expert conflate barbs with blade members with Petitioner's expert going so far as to say a blade is a synonym of a barb. Ex. 2008 at ¶ 79; Ex. 2010 at 80:13-15. Petitioner and Dr. Kuhn improperly states Lint discloses blade members and routinely changes the language and Figures of Lint to disclose "blade

members" even though Lint expressly uses the term "barb." *See* Ex. 2010 at 81:13-20. Petitioner changes the express words of Lint claim Lint satisfies claims 1 and 11 in reliance on Dr. Kuhn's declaration. Ex. 2008 at ¶ 79. Dr. Kuhn's illogical position rejects the plain and ordinary meaning of blade, plain and ordinary meaning of barb, prior art, statutes, and dictionary definitions. *Id.* While Dr. Kuhn seemingly agrees a barb may be a projection extending backward from a point having an angle of less than 90 degrees from the body, he claims it can still be a barb without projecting backwards and claims a blade may have a cutting edge but doesn't have to. Ex. 2010 at 70:10-73:12; 78:19-79:10; 82:2-83:15; 88:18-25. Furthermore, Dr. Kuhn expressly disagreed that the general purpose of a barb is to help retain the arrow within the tissue. *Id.* at 98:10-14. Dr. Kuhn claims a barb and blade are synonyms but could not proffer a coherent definition of either term or of the singular term blade/barb. *Id.* at 80:13-88:25; Ex. 2008 at ¶ 79.

In essence, Dr. Kuhn's effort to define a barb as a blade, and a blade as a barb, fails to provide any clarity to either term. Ex. 2008 at ¶ 80. As a result, the only definition Patent Owner and his expert can surmise from Dr. Kuhn, is that a barb/blade is simply a "thing" with no defining structure, no defining position relation to the body, and no defining function. *Id.* Dr. Kuhn's failure to articulate a definition resulted in him not being able to agree the blades of the '177 Patent slice the tissue despite express language from the '177 Patent. Ex. 2010 at 70:10-18. A

POSITA would completely disagree with Dr. Kuhn's claim that barbs and blades are synonyms given the well-established plain and ordinary meaning of the terms as stated herein. Ex. 2008 at ¶ 80.

Complicating Dr. Kuhn's failure to provide a definition of blade member or barb, is his failure to understand the Lint reference. Ex. 2008 at ¶ 81. The barbs in Lint are not designed to cut because the barbs are fully retracted as the arrow penetrates the animal. *Id.* Lint states upon

> the initial impact on the outer portions 21 of the barbs 19 causes the barbs to be retracted into the slots 18 against the bias of the spring 24. ***After the arrowhead 10 has completely penetrated the flesh of an animal, the spring 24 forces the barbs 19 outwardly so as to retain the arrowhead within the animal.***

EX 1001 ; at 2:64-70 (emphasis added). Despite this unequivocal language, Dr. Kuhn testified the "they can open" within the animal. Ex. 2010 at 79:19-22; Ex. 2008 at ¶ 81. Not only does Dr. Kuhn not understand the operation of Lint, he purports for the purpose of this proceeding to not understand the difference between a blade member and a barb. Ex. 2008 at ¶ 81.

Dr. Kuhn's newfound position of convenience is not only undermined by the evidence cited above but undermined by his own patent portfolio. Ex. 2008 at ¶ 82. For example, in U.S. Pat. No. 6,695,726, filed Feb. 11, 2003, Dr. Kuhn discloses an invention for locking an "arrow blade" in which the "blade" discloses a cutting edge. Ex. 2010 at 80:19-25; Ex. 2014. At the time he filed his patent application in 2003,

he understood a blade had a cutting edge. Ex. 2014 at 1:35 (indicating "blades slice"); Ex. 2008 at ¶ 82; Now however, Dr. Kuhn agrees the use of blade in his patent is meaningless as it could have been exchanged for the term "barb" throughout. *See generally*, Ex. 2010 at 80:19-84:1; Ex. 2008 at ¶ 82. Dr. Kuhn makes this statement even though Figure 6 of his patent, displayed below, has no projection extending rearwardly with an angle of less than 90 degrees to the body. Ex. 2010 at 80:19-84:1; Ex 2014 at Fig. 6. Not only does the patent not disclose such a structure, nothing in his patent discloses the "blade" as preventing extraction. *See generally* Ex 2014 (indicating no discussion of extraction).

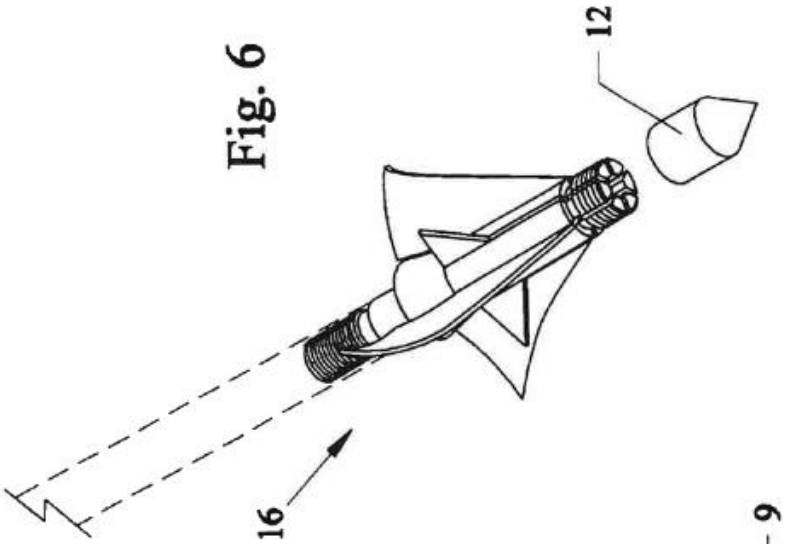

Dr. Kuhn's failure to define barb and blade means he is simply taking a position for this proceeding and is not how a POSITA would understand the terms. Ex. 2008 at ¶ 82.

Finally, Dr. Kuhn's declaration, and his deposition, fail to support Petitioner's improper switching of the term "barb" in Lint to "blade member." Ex. 2008 at ¶ 83. The '177 Patent expressly states what the blade member is and what it does. *Id.* Similarly, Lint expressly states what the barb is and what it does. There is no overlap and Lint cannot satisfy the blade member element regardless of Dr. Kuhn's attempt to do so. Thus, claims 1-4, 7, 9, 11-12, 15, and 17 are not anticipated by Lint.

2. Lint does not disclose "the biasing member being the only element operable to hold the blade members in the extended position"

Independent claim 1 expressly requires the biasing member to be the only element that holds the blade member in the extended position. As disclosed in the '177 Patent, the biasing member holds the blade members in the extended positions.

In contrast, Lint requires two elements to maintain the barbs in the extended position: 1) the spring and 2) the arrow shaft. Ex. 2008 at ¶ 85. In Lint, the arrow shaft is moveable in relation to the ferrule and must be screwed into an out position for the barbs to be in the extended position. Ex. 1001 at 2:64-70, Figs. 2, 3. The arrow shaft 17 is instrumental in holding the barbs in the extended position as evident by comparing Figure 2 with Figure 3 as disclosed above. Ex. 2008 at ¶ 85. Petitioner and its expert's conclusory allegation that the element is satisfied is simply not correct. *Id.*

Thus, claims 1-4, 7, 9, 11-12, 15 and 17 are not anticipated by Lint.

C. Claims 1-4, 7, 9, 11-12, 15, or 17 are not obvious by Lint alone or in further view of Minisini or Krieger (Ground 3)

1. Overview of Krieger

Krieger discloses several embodiments with one invention to "impart positive rotation to the arrow and in so doing oppos cross air currents which otherwise would deflect the arrow's flight." Ex. 1006 at 1:16-18. To accomplish this purpose, Krieger discloses "blades 16 [] arranged at a slight acute angle or spiral with respect to the longitudinal axis of the shank 14 or such that the trailing edges 17 are slightly off center." *Id.* at 1:52-55.

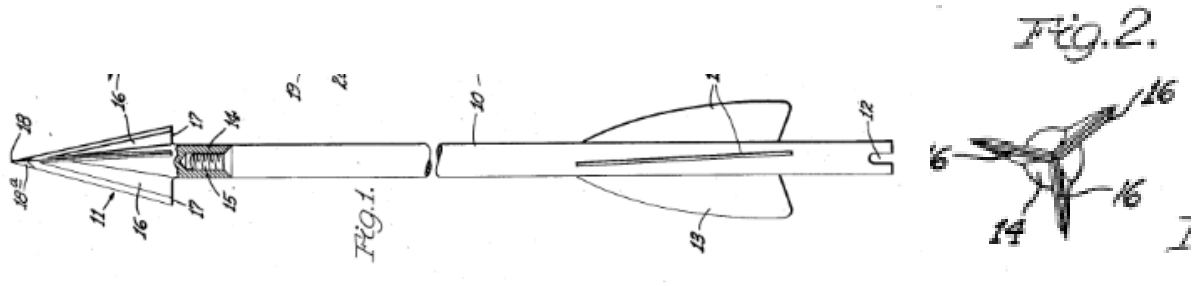

Id. at Fig. 1, 2. As seen in Fig. 2 above, the blades are not straight as related to the axis which, as Krieger contends, "cause the arrow to rotate and oppose cross air currents with the result that the arrow keeps more nearly to the mark that would otherwise be the case." *Id.* at 2:1-4. Krieger further discloses "arrang[ing] the feathers 13 at an angle to the arrow shaft 10 or spirally arranged on the shaft to also act with the head to rotate the arrow, the feathers being arranged at substantially the same angel as the blades 16." *Id.* at 2:15-19.

Krieger also discloses a second embodiment in Figs. 5-6 that does not have the design features identified in the first embodiment for rotation of flight and is instead designed for "fishing . . . having, metallic tubular shafts 22 through which the fish cord or line 23 extends and is secured to the arrowhead." Ex. 1006 at 2:30-33. In this embodiment, the blades are straight and do not have any acute angles. *Id.* at Figs. 4, 5. There is a singular arm 30, positioned below the fixed blades, that acts as a barb as upon "entering an object pivots to a position transverse to the shank and shaft to oppose withdrawal of the arrow." *Id.* at 2:43-46.

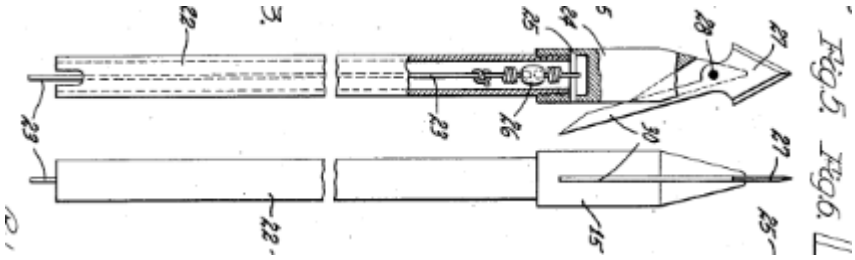

Id. at Figs. 4, 5.

A POSITA would understand Krieger's first embodiment as teaching design elements to cause the arrow to rotate, ostensibly, to oppose cross air currents and allow the arrow to keep more nearly to the mark. Ex. 2008 at ¶ 94. Importantly, Krieger does not disclose the number of blades necessary to achieve such rotation but discloses three blades. Ex. 1006 at Fig. 3. The number of blades seems to be inconsequential to Krieger as Krieger discloses the *angle* of the blades as being important. Ex. 2008 at ¶ 94. Krieger's teachings may or may not occur as stated, however, slight rotation of the arrow does help the arrow hit more nearly the mark

(or aimpoint) due to minimizing the launch jump and first maximum yaw. *Id.* A POSITA would understand rotation of the arrow is more easily accomplished by configuring the fletching at the aft end rather than at the broad head end which Krieger acknowledges in the statement that it is preferable to arrange the feathers (or fletching) to accomplish rotation. *Id.*; Ex. 1006 at 2:15-19.

Krieger's understanding, and Dr. Kuhn's reliance thereon, regarding the necessity of applying forces at both ends of the arrow to keep the arrow on a true course of flight is incorrect. Ex. 2008 at ¶ 95. Spin stabilized projectiles, such as a bullet, require application of forces at both ends of the projectile whereas fin stabilized projectiles such as arrows do not. *Id.* For fin stabilized projectiles it is, extremely, important to have the center of application of forces as far aft as possible, such as fletching near the aft end from the center of mass which is near or, slightly, forward of the midpoint of the arrow shaft length. *Id.* This causes the longest moment arm to better dampen initial yaw and perturbations in flight for a fin stabilized projectile. *Id.*

A POSITA would understand the acute angle of the blades taught by Krieger significantly increases the resistance during penetration because of the increased cross section of the blades. Ex. 2008 at ¶ 96. The increased cross section generates more resistance as it interacts with every layer of the quarry. *Id.* The increased

resistance reduces penetration death and ultimately lethality. *Id.* Thus, designs like Krieger, significantly, decrease the lethality of those broad heads. *Id.*

The embodiment of Krieger that discloses the barb discloses two blades with the arm (barb) extending generally at the same angle as the cutting edge of one the blades. Importantly, a POSITA would understand the arm (barb) of Krieger does not have a cutting edge as compared to the blade. Ex. 2008 at ¶ 97; *see* EX. 1006 at Fig. 6 (showing the differences between the blade and the arm). Unlike Dr. Kuhn's argument, Krieger did not disclose two barbs and was not concerned about the flight of the embodiment with only one arm. A POSITA would agree, there is no reason a second arm (or barb) would have any material impact on flight characteristics. Ex. 2008 at ¶ 97. As noted by Krieger, the purpose of the barb is not to cut the fish or aide in penetration, instead, it was to extend outwards to "oppose withdrawal of the arrow." *Id.*

2. Overview of Minisini

Minisini discloses a fishing arrow "provided with barbs" and a "retrieving line [] secured to the arrow head." Ex. 1005 at 1:18-19. The point of the barbs is to secure the arrow to the fish so that it can be pulled in by the retrieving line. *Id.* at 19-21. According to Mininsi, one of the problems of barbed fish hooks, is the difficulty in removing the barbed arrow from the fish resulting in many hunters pulling the arrow forward through the fish which sometimes damages the fins or feathers. *Id.* at 19-27.

Thus, Minisini sought to develop a new arrowhead with retractable barbs that could be retracted after the fish is secured and retrieved from the fishing line. *Id.* at 28-47.

Minisini's design provides a singular barb 20 pivotally connected to the pointed shank 18. Ex. 1005 at 2:10-34. The pointed shank 18 is rotatably connected to the ferrule body 12. *Id.* A slot 19 is positioned within the ferrule body 12 and is designed to receive a portion of the barb 20. *Id.* When the arrow is shot into the fish, the pointed shank 18 is rotated relative to the ferrule body 12 such that the slot 19 is *not* aligned with the barb 20 causing the barb 20 to rest on the ferrule body 12. *Id.* at 2:35-37, 43-46. This causes the barb 20 to be in an extended or open position during flight and during penetration. *Id.*

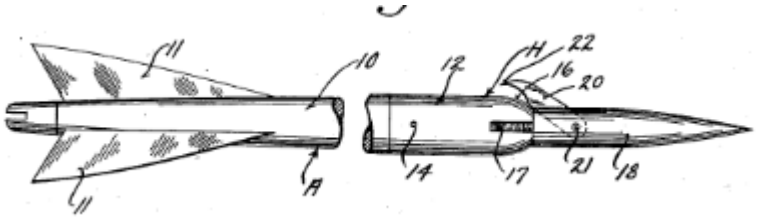

Id. at Fig. 1. Minisini discloses the outer longitudinal edge may be "sharpened to cut through the fish" along with having a curved hook at the terminal end. *Id.* at 2:31-34.

Minisini teaches the pointed shank 18 may be rotated relative to the ferrule body 12 to align the slot 19 with the barb 20 which allows the barb 20 to retract into the slot 19. A POSITA would understand from this disclosure that a fish arrow pierces through the entirety of the fish exposing the entire arrow head. Ex. 2008 at

¶ 103. As a result, the hunter may then manually rotate the pointed shank 18 to the ferrule body 12 to align the slot 19 to the barb 20. *Id.* At that point, the hunter may then push the barb 20 into the slot 19. *Id.*

3. A POSITA would not add a blade member to the barb of Lint, either through the teachings of Lint alone, or in combination with Krieger or Minisini

As a practical matter, Petitioner and Dr. Kuhn's argument concerning obviousness of Lint calls into question their credibility regarding the meaning of barb and blade members. In one instance, Dr. Kuhn argues the barb of Lint is a blade member, and in another instance, Dr. Kuhn argues the barb of Lint does not satisfy claims 1 and 11 of the '177 Patent thus a POSITA would add a cutting edge to the barb. A POSITA cannot understand both of these highly conflicting positions. Ex. 2008 at ¶ 87.

As an initial matter, it is important to understand the purpose of the blade members of the '177 Patent. Ex. 2008 at ¶ 91. In the '177 Patent, the blade members are intended to improve aerodynamics by having the blade members in a retracted position during flight, deploy within the flesh with the intent of making larger wounds, selectively retract upon going through denser material like bone, and then redeploy once it passes through the denser material. *Id.* The '177 Patent uses blade members to cut, Lint conversely uses barbs to retain. *Id.* Adding a blade to the non-deployed barbs of Lint is not logical as the barbs of Lint are not "reasonably pertinent

to the particular problem with which the inventor is involved." *K-TEC, Inc. v. Vita-Mix Corp.*, 696 F.3d 1364, 1375 (Fed. Cir. 2012).

As an initial matter, it is important to understand the purpose of the blade members of the '177 Patent. Ex. 2008 at ¶ 91. In the '177 Patent, the blade members are intended to improve aerodynamics by having the blade members in a retracted position during flight, deploy within the flesh with the intent of making larger wounds, selectively retract upon going through denser material like bone, and then redeploy once it passes through the denser material. *Id.* The '177 Patent uses blade members to cut, Lint conversely uses barbs to retain. *Id.*

Petitioner and Dr. Kuhn's reliance on Lint as a primary reference is misplaced. First, the barbs of Lint are retracted as they penetrate the quarry and do not deploy until the broadhead has passed through the quarry and there is no longer any external force causing the barbs to be in the retracted position. Ex. 2008 at ¶ 88. Since the barbs are completely retracted during penetration, there is no reason for why a POSITA would add a cutting edge to the outside edge of the barb disclosed in Lint. *Id.* Petitioner and Dr. Kuhn do not understand Lint as Dr. Kuhn testified that the barbs are in the open position during penetration of the quarry. *Id.* It is likely Dr. Kuhn's misunderstanding of how Lint operates made him believe a sharp edge would be beneficial. *Id.*

Second, Lint teaches away from the addition of a sharp edge on the barb as adding a cutting edge would not improve the penetration taught by Lint or improve the barb function. Ex. 2008 at ¶ 88. *Arctic Cat Inc. v. Bombardier Rec. Prods.*, 876 F.3d 1350, 1360 (Fed. Cir. 2017) ("Prior art teaches away when a person of ordinary skill, upon reading the reference, would be discouraged from following the path set out in the reference, or would be led in a direction divergent from the path that was taken by the applicant."). A POSITA would understand adding a blade to the outer edge of Lint and deploying the barbs during penetration would frustrate the purpose of a barb. Ex. 2008 at ¶ 90. Adding a blade to inflict more damage actually generates a bigger hole. *Id.* With a bigger a hole, there is less intact flesh for the barb to grab onto to help maintain the quarry on the arrow. *Id.* For example, if there is a large hole generated with the same size as the barbs due to a blade on the front edge, then it is more likely for the arrow to come out of the hole. *Id.*

Moreover, a POSITA would understand adding a cutting edge to the barb of Lint would negatively affect the strength of the barb. Ex. 2008 at ¶ 89. Shaving off a portion of the outside edge reduces the structural integrity of the barb and creates a situation in which the barb is likely to fail or break off. *Id.* Both Krieger and Minisini teach an intended application of its invention is for fish to be retrieved via cord after pierced. Ex. 2008 at ¶¶ 98, 105.

A POSITA would understand modifying Lint, in view of Minisini for example, would provide no benefit yet add manufacturing costs, increases manufacturing time, and increases risk to quality control for no measurable value. Ex. 2008 at ¶ 106.

Petitioner and Dr. Kuhn argue the broadhead of Lint would fly better if the barbs had a cutting edge on the exterior side. Ex. 2008 at ¶ 89. Dr. Kuhn cites no evidence for this statement. *See generally* Ex. 1019 at ¶ 118 (stating conclusory adding a blade "greatly enhancing the aerodynamic flight characteristics of broadheads" without citation to any evidence). If somehow the small face of the Lint barbs created inconsequential drag, a POSITA would still not structurally weaken the barb by making it thinner as adding a cutting edge to the barb would negatively affect the strength. Ex. 2008 at ¶ 89.

There is no reason, nor any teaching of Lint alone or in view of Krieger or Minisini, that would suggest the "barbs" 1) should be deployed while the broadhead is moving through flesh, 2) that the barbs should contain a blade member to assist in cutting to make the wound larger, or 3) that the blade should be added to make the flight better. Ex. 2008 at ¶¶ 87-107. Impermissibly, Petitioner utilizes hindsight bias to read into Lint what Petitioner wants it to teach. "A factfinder should be aware, of course, of the distortion caused by hindsight bias and must be cautious of arguments reliant upon ex post reasoning" *KSR*, 550 U.S. at 421. "The inventor's own path

itself never leads to a conclusion of obviousness; that is hindsight. What matters is the path that the person of ordinary skill in the art would have followed, as evidenced by the pertinent prior art." *Otsuka Pharmaceutical Co. v. Sandoz*, 678 F.3d 1280, 1296 (Fed. Cir. 2012). Here, Petitioner and Dr. Kuhn use the claim language of the '177 Patent as a roadmap to twist the prior art reference(s) into an obviousness reference instead of making a reasoned case as to why a POSITA would modify Lint to include a blade. In other words, without the disclosure of the '177 Patent, no POSITA would add a blade member to the barbs of Lint to turn them into blade members.

As indicated in Section II.A.2, there was long felt need to develop a mechanical broadhead that could pass through bone to help achieve humane kills and increase recovery of quarry. Petitioner's own expert acknowledged a nearly 40 gap of innovation in mechanical broadheads. Petitioner's reliance in its obviousness rejections, were published in the 1950s and 1960s, well before this drought of innovation. To the extent Petitioner has shown a prima facie case of obviousness, the long felt need and failure of others show the claims of the '177 Patent are not obvious.

4. Petitioner fails to establish the requirements for obviousness by a preponderance of the evidence. Petitioner cannot establish claims 1-4, 7, 9, 11-12, 15, or 17 are obvious.

Petitioner fails to explain how a POSITA would modify Lint to ensure the biasing element is the only element that holds the "blade members" in the extended position.

As explained *supra*, Lint fails to disclose structure that satisfy the claimed element of a "biasing member being the only element operable to hold the blade members in the extended position." Petitioner and Dr. Kuhn fail to provide any reason as to why a POSITA would modify Lint to have the biasing member be the only element operable to hold the blade members in the extended position. Making such a change would require a radical redesign of Lint to remove the functionality of the arrow shaft that may be screwed into the ferrule body that modifies the biasing of the barbs. Ex. 2008 at ¶ 108.

VI. PETITIONER'S ARGUMENT THAT HENDRICKS RENDERS OBVIOUS, CLAIMS 11-12, 15, AND 17 IS NOT PERSUASIVE (GROUND 4)

A. Petitioner fails to show how the barb of Hendricks qualifies as a blade member

Petitioner fails to explain how Hendricks' disclosure of a single "barb" satisfies the claimed element of a blade member. As already stated herein, a barb and blade member are two different physical structures and not synonyms as Dr. Kuhn alleges. Ex. 2008 at ¶ 109. The express teachings of Hendricks support the commonly understood meaning of the term barb because Hendricks' invention is to

help retain a spearhead within the tissue. *Id.* The patent states it "has particular application to underwater spears which are utilized to catch game fish." Ex. 1013 at 1:26-27. In other words, once the spear enters the fish, the single barb is deployed to keep the fish on the spear so the user can retrieve the fish. Ex. 2008 at ¶ 109. Thus, Hendricks clearly uses the commonly understood meaning of the term barb. *Id.*

Furthermore, the barb of Hendricks does not have a cutting edge. Ex. 2008 at ¶ 110. There is nothing in the Hendricks specification that would support disclosure of such a cutting edge. Conversely, Fig. 2, reproduced below, clearly shows a barb (numeral 26) having a blunt front edge and not a cutting edge.

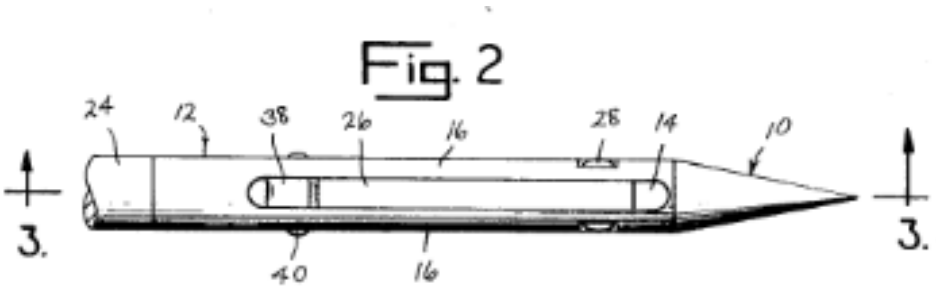

Ex. 1013 at Fig. 2. The blunt front edge clearly does not meet the definition of a blade which is a required element of independent claim 11. Ex. 2008 at ¶ 110.

B. Petitioner fails to show why the additional second barb (blade member) would be obvious

Claim 11 requires two blade members. Petitioner acknowledges Hendricks only discloses one barb. Taking aside the above argument regarding barb versus

blade member, Petitioner's argument concerning obviousness fails as there is no reason a POSITA would add an additional barb to Hendricks. Ex. 2008 at ¶ 111.

As an initial matter, Hendricks' express purpose of the single barb is to retain the spearhead within the animal to assist in retrieval. Ex. 2008 at ¶ 112. The single barb deploys after it is in the animal. *Id.* There is no disclosure of an intent to use the barb to cut, to make the wound bigger, to make the spearhead more aerodynamic, or any structure that would facilitate those intentions. *Id.* Instead, Hendricks' disclosure should be given affect that it discloses a barb for use a barb; not as a blade member. *Id.*

Secondly, Dr. Kuhn discounts the difficulty in designing broadheads. Ex. 2008 at ¶ 113. Change to one element invariably affects the performance of other elements. *Id.* Simply cutting and pasting a second barb onto the disclosure of Hendricks, discounts the difficulty and time-consuming nature of making changes to a design. *Id.* There is a lot more to designing a broadhead than making a patent drawing like Dr. Kuhn made here. *Id.* Dr. Kuhn acknowledges the ferrule body would have to be significantly larger and wider due to adding the second barb on the other side. Ex. 2010 at 129:6-13. While Dr. Kuhn disagrees, the addition of a second barb would add additional dexterity and time to manually retract both barbs, versus the one barb taught by Hendricks. Ex. 2008 at ¶ 113. Dr. Kuhn fails to consider the function of Hendricks and the design complexities of widening the ferrule body to

fit a second barb. *Id.* There is simply no basis for POSITA to add a second blade based on the function and disclosure of Hendricks. *Id.*

Dr. Kuhn acknowledges he reviewed Hendricks in light of Flanagan and "determined" he "could add a second blade to the Hendricks patent similar to how Flanagan described it." Ex. 2010 at 128:4-22. This is impermissible hindsight and a classic example of using the claimed invention as a roadmap. *Otsuka Pharmaceutical*, 678 F.3d at 1296 ("The inventor's own path itself never leads to a conclusion of obviousness; that is hindsight."). Dr. Kuhn's admission in this context is telling and explains his failure to provide articulated reasonings to combine references given the differences in function. Petitioner has failed to prove obviousness in this ground by a preponderance of the evidence.

VII. LIECHTY II DOES NOT ANTICIPATE CLAIMS 1-4, 9, 11-12, OR 17 (GROUND 5)

A. Overview of Liechty II.

Liechty II discloses a mechanical broadhead that uses a biasing element instead of an elastic ring to retain blades in a closed or retracted position. Ex. 1012 at 4:23-27. Liechty II discloses blades 50 having a wing 64 that is pivotably connected at the rearward end to the arrowhead body 30 by hinge pins 70. *Id.* at 10:30-35; Fig. 1. The blades 50 are held in a retracted position against the arrowhead body 30 due to an annular spring 80 that biases the blades 50 into a receiving notch 40 near the forward end of the arrowhead body. *Id.* at 11:50-12:2. When the wings

64 of the blades 50 contact an animal, the blades 50 are compressed rearward against the spring 80. Ex. 1012 at 12:2-11. The wings 64, having a forward angle, rotationally drive each blade 50 rearward toward the open or extended position along the hinge pin 70. *Id.* at 12:7-14 ("As shown in FIG. 4, while penetrating the animal or object after initial impact, blades 50 begin to rotate away from arrowhead body 30, towards the fully open position."); Ex. 2008 at ¶ 114.

As expressly shown in Fig. 4, the arrows (highlighted by the red circle and enlarged) show the competing forces of movement impacting the blade 50 with the spring 80 biasing the blade 50 to the closed position whereas the force of the animal on the wing 64 forces the blade 50 toward the open position. *Id.* at Fig. 4. Once the forces from the animal flesh push the blade to the open position as illustrated in Fig. 5, "the continual urging force produced by the annular spring 80 drives or continually urges cutting edge 54 of each blade 50 in a forward direction." *Id.* at 12:13-15.

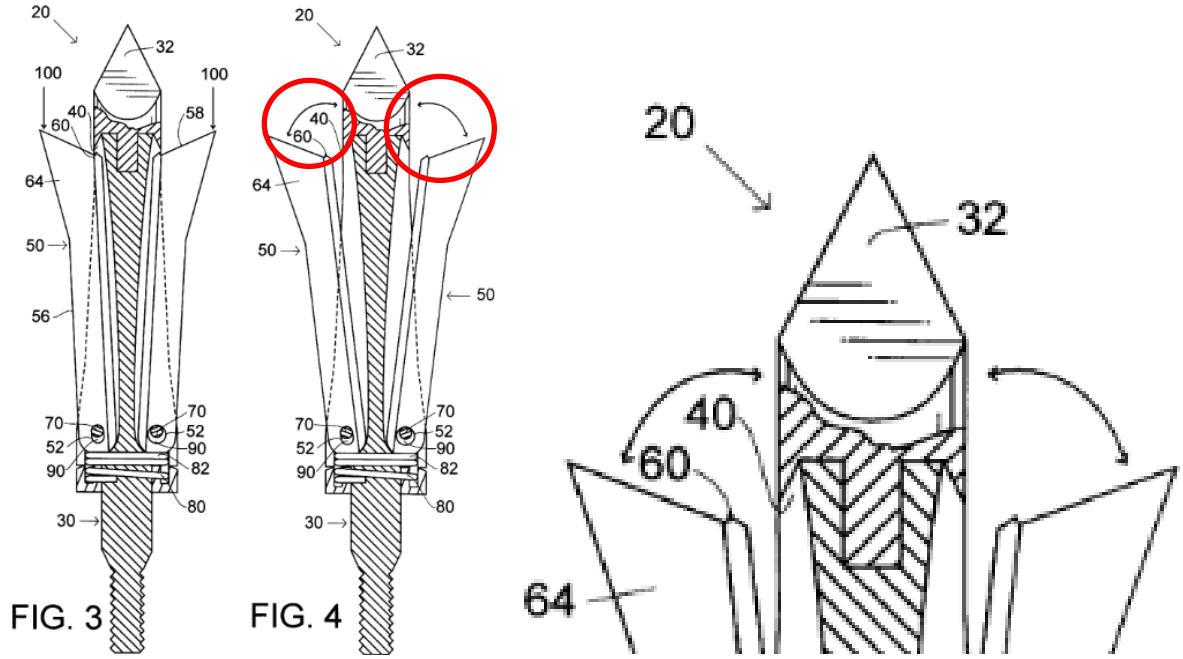

The direction of force shown in Fig. 5 (highlighted by the red circle) matches the direction of force shown in Fig. 4; thus the biasing force acts to close the blades 50, not open the blades. Ex. 2008 at ¶ 115.

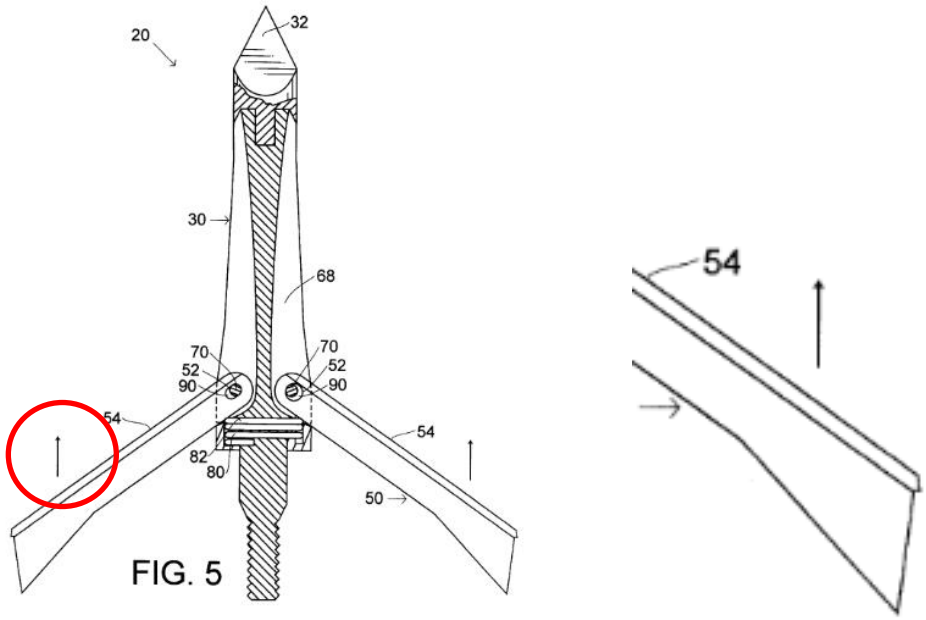

As seen in Figures 3 and 4 above, the spring 80 is compressed to bias the blade into the receiving notch to keep it in the closed position. Ex. 2008 at ¶ 116. As seen in Figure 5, the spring 80 is fully compressed which translates to a biasing force towards the forward end resulting in biasing the blade to the closed position. *Id.*

B. Liechty II does not disclose a "blade member having a forward end pivotally interconnected with the ferrule body" or "at least one biasing member biasing the first and second blade members towards the extended positions"

Petitioner and Dr. Kuhn flip the express language of Liechty II to claim forward is rearward, extended position is actually closed position, and then generate a new figure that has no support within the teachings. Ex. 2008 at ¶ 117. In essence, the Liechty II disclosure operates opposite to the independent claims of the '177 Patent where Liechty II's blade members are pivotally connected at rearward end, instead of the forward end, and the biasing element closes the blades, whereas claims 1, 11 extend the blades. *Id.* Dr. Kuhn's position regarding the pivotal connection direction and the orientation of the biasing element is not logical and ignores the operation and express disclosure of Liechty II. *Id.*

The express disclosure of Liechty II teaches the blades in a retracted or closed position means the blades are retracted against the body as shown above in Figure 3. Ex. 2008 at ¶ 118. Relatedly, the open position is when the forward end of the blade is rotated away from the forward end of the arrowhead body towards the

rearward end as disclosed in Figure 5 above. *Id.* As expressly taught by Liechty II, the biasing element, spring 80, biases the blades forward into the retracted position. Without the biasing element, the blades would simply fall into the open or extended position during flight or in any holding orientation except for upside down. *Id.* The combination of Figures 4 and 5 confirm this fact because the arrows listed in the figures that point toward the forward end are showing how the biasing element biases the blades to the closed position. *Id.* In contrast, claims 1 and 11 require the biasing element to bias the blades to the open position.

Independent claim 11 and dependent claim 4 require a "blade member having a forward end pivotally interconnected with the ferrule body." Ex. 1001 at claims 4 and 11. This claim element must be read together with the other elements of claims 1 and 11 that disclose the biasing element moving the blade to the extended position as defined by the distance between the ferrule and the rearward end of the blade. Ex. 2008 at ¶ 119. As disclosed above in light of the function of the biasing element retracting the blades, Liechty II clearly teaches a blade pivotally interconnected to the ferrule body at the rearward end where hinge pin 70 is connected to the arrowhead body. *Id.*

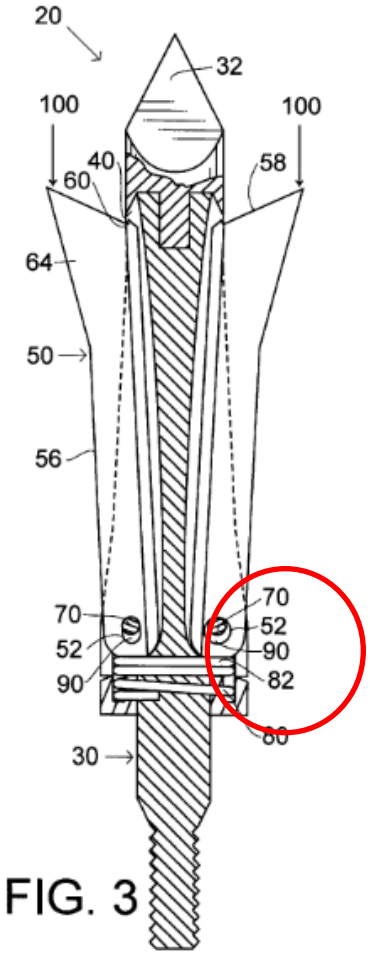

FIG. 3

For reference, claims 1 and 11 define the rearward end of the broadhead being where the shaft attaches and Liecthy II does the same. Ex. 2008 at ¶ 120. As a result, the language in the claim defining the forward end of the pivotal connection must be viewed in light of the definition related to the ferrule body and the biasing element. *Id.* The orientation of the blade in Liechty II is opposite the orientation of the blades in claims 4 and 11. *Id.* Thus, Liechty II *does not* disclose the limitation of a blade member having a forward end pivotally interconnected with the ferrule body. *Id.*

Petitioner and Dr. Kuhn choose to reverse the express teachings of Liechty II to fit their narrative. Ex. 2008 at ¶ 121. Key to this flawed narrative, is the fabricated

drawing Dr. Kuhn created to show the blades at a 90-degree angle to the ferrule body as shown below. *Id.*

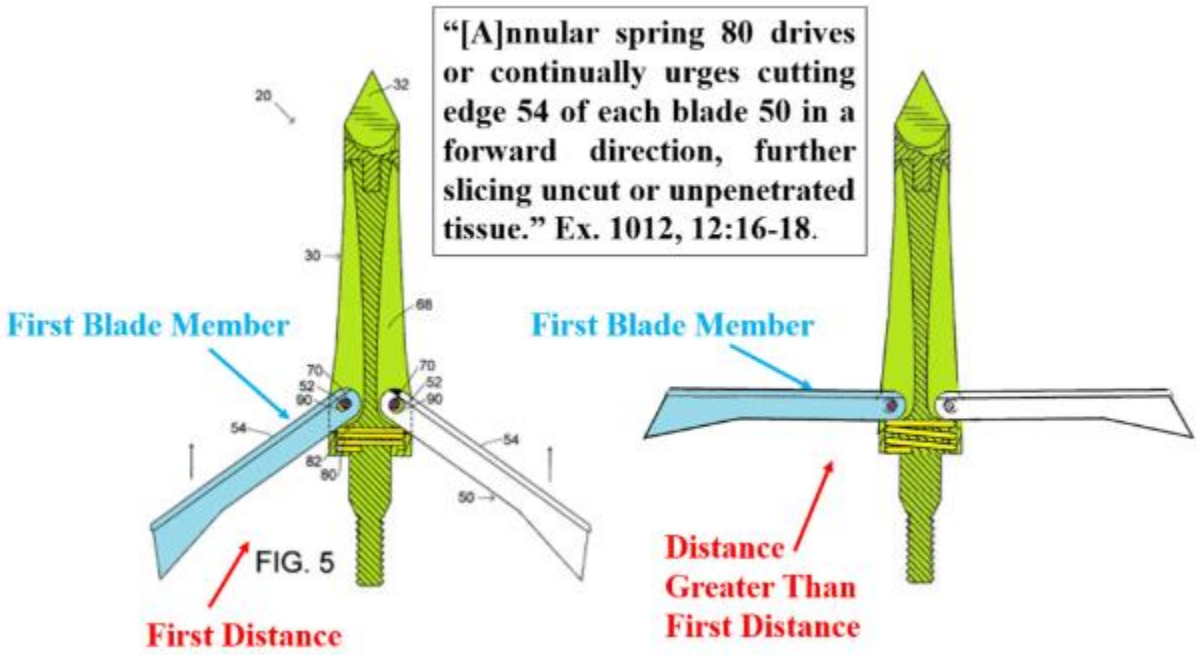

The drawing on the left is Dr. Kuhn's incorrect annotation (his label of first distance should be second distance) of Leichty II's Figure 5. *Id.* Contrary to Liechty II's express language that figure 5 shows the blades at the extended or open position, Dr. Kuhn claims the blades are in a "closed position." Ex. 2010 at 115:21-116:4. To further this incorrect analysis, Dr. Kuhn generated the drawing on the right which depicts the blades at a 90-degree angle which he refers to as the "deployed" position. *Id.* at 121:2-7; 121:23-122:11. However, Dr. Kuhn acknowledges this drawing is basically a guess as he concedes the spring biases the blades "up" but doesn't know how far up the blades will go. *Id.*; Ex. 2008 at ¶ 121. Dr. Kuhn acknowledges the

blades could move "a millimeter. It could be a centimeter." Ex. 2010 at 121:2-7; 121:23-122:11.

Dr. Kuhn's above acknowledgement is a fatal flaw to his argument as he concedes the blades are moving "up" or *toward the closed position* as expressly taught by Liechty II. Ex. 2008 at ¶ 122. As discussed above, the forces of the spring, shown in Figures 4 and 5, clearly show the biasing force of the spring moving the blade to the closed position. *Id.* If anything, Dr. Kuhn's fabricated drawing shows a transition point of the blade on its way to the closed position. *Id.* Liechty II's teachings are opposite of claims 1 and 11 of the '177 Patent which require the biasing element to move the blade to the retracted position and cannot satisfy this element. *Id.*

Dr. Kuhn's misleading drawing also fails to account for the compression of the spring expressly disclosed in Figures 3-5. Ex. 2008 at ¶ 123. In Figures 3 and 4, the spring is not compressed as much as shown in Figure 5. *Id.* Notably, Figures 3 and 4 show the blade members either in the closed position or just exiting out of closed position. *Id.* In contrast, the spring is fully compressed in Figure 5. *Id.* In Dr. Kuhn's fabricated drawing he shows the spring in the compressed state of Figures 3 and 4 but only has the blade members in the 90-degree angle position. *Id.* There is no reason to believe the blade members of Kuhn would stop at the position Dr. Kuhn arbitrarily picked. *Id.* Instead, the Board should utilize the express teaching of

Liechty II that shows the blade members at the closed position when the spring is not fully compressed as shown in Figures 3 and 4. *Id.* While Dr. Kuhn adamantly claims the spring will not move the blade member back to the closed position as disclosed by Liechty II, or near the closed position, he has no express teaching to support his position. *See* Kuhn deposition at 122:23-123:3 (implicitly agreeing the specification does not state that but he is assuming based on his knowledge of springs).

In conjunction with Dr. Kuhn's fabricated and misleading drawing, Dr. Kuhn ignores the directional elements disclosed by Liechty II in his efforts to meet the directional elements of claims 4 and 11. Ex. 2008 at ¶ 124. While Dr. Kuhn acknowledges the forward end of Leichty II is the tip of the arrowhead and the rearend is the attachment point to the shaft, he expressly ignores the forward end for describing the blade member and its pivotal connection. *Id.* For example, he uses Liechty II's figure showing the blade in the open or extended position to orient the forward end of the blade which resulted in his incorrectly annotated drawing below.

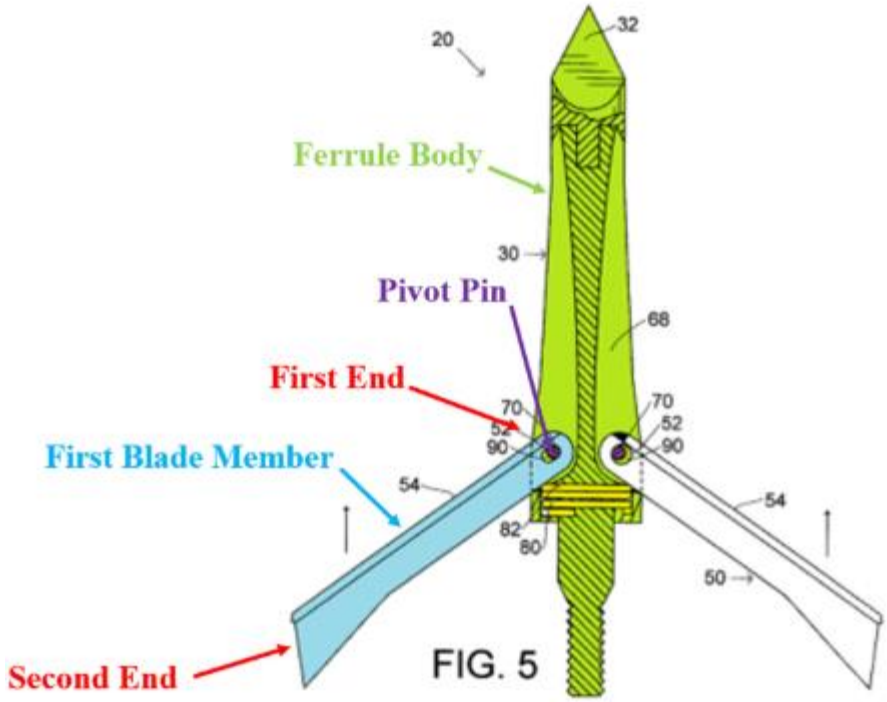

Id.; Ex. 1019. Dr. Kuhn's annotation ignores the other elements of the claims requiring directionality of the biasing element. Ex. 2008 at ¶ 124. There is no reason to reject the express teachings of Liechty II in favor of the unsupported positions articulated by Dr. Kuhn. Id. Liechty II does not teach a blade member having a forward end pivotably connected to a ferrule nor does it teach a biasing element biasing the blade to the extended position.

C. Liechty II does not disclose "the biasing member being the only element operable to hold the blade members in the extended position"

Assuming *arguendo* the biasing member of Liechty II does bias the blade members outward to the extended position, Liechty II still does not satisfy the limitation of claim 1 which requires the biasing member to be the "only element

operable to hold the blade members in the extended position." Liechty II expressly discloses the spring pushes the blade into the forward position. Ex. 2008 at ¶ 125. In order for the blade to be retained in the position shown by Dr. Kuhn in his fabricated drawing, there must be a force applied in the opposite direction. *Id.* Thus, the resistance force from the animal flesh is required to hold the blade members in the fully extended position as Dr. Kuhn suggests. *Id.* Petitioner and Kuhn fail to explain why physics doesn't apply to the disclosure of Liechty II or why the blades are inexplicably stopped in the location disclosed in the modified Figure 5. *Id.* Nevertheless, there is obviously another element (*i.e.* flesh) acting to hold the blades in the extended positions which Dr. Kuhn acknowledges. Kuhn deposition at 123:22-23 (noting it is going through the animal). Thus, Liechty II does not teach this element which is a requirement to anticipate claims 1-4 and 9.

VIII. CONCLUSION

Vandewater does not anticipate claims 11-12, 15 and 17 because Vandewater's disclosure fails to teach a biasing element biasing the blades to an extended position as required by claim 11 of the '177 Patent.

Lint does not anticipate claims 1-4, 7, 9, 11-12, 15 and 17 because Lint's disclosure of barbs does not meet the blade member limitations of the '177 Patent. Further, Lint does not disclose a biasing member being the only element operable to hold the blade members in the extended positions as required by claim 1 of the

’177 Patent. Furthermore, Lint alone, or in combination with Minisini or Krieger, do not render claims 1-4, 7, 9, 11-12, 15 and 17 obvious as a POSITA would not add a blade member to the barbs of Lint.

Hendricks alone does not render claims 11-12, 15 and 17 obvious as a POSITA would not add a blade member to the barb of Hendricks or add a second barb (blade member).

Leichty II does not anticipate claims 1-4, 9, 11-12, 15 and 17 because Leichty II fails to disclose a biasing element biasing the blades to an extended position as required by claims 1 and 11 of the ’177 Patent.

Petitioner has failed to show any claims of the ’177 Patent are invalid by a preponderance of the evidence.

Dated: September 24, 2024

MCKINNIE & PAUL, PLLC
By: /jason e mckinnie/
Jason E. McKinnie
Reg. No. 65,726
jmckinnie@mckinniepaul.com
8610 N. New Braunfels, Suite 320
San Antonio, Texas 78217
(210) 247-2220 (Office)

CERTIFICATE OF WORD COUNT

The undersigned certifies that the foregoing PATENT OWNER'S RESPONSE complies with the type-volume limitation in 37 C.F.R. § 42.24(b)(1). According to the word count tool in Microsoft Word, the brief contains 13,933 words, excluding the parts of the document that are exempted by 37 C.F.R. § 42.24(a).

/jason e mckinnie/
Jason E. McKinnie

CERTIFICATE OF SERVICE

The undersigned certifies that a true and correct copy of the foregoing **PATENT OWNER'S RESPONSE** is being served on counsel of record by filing this document through the Patent Trial and Appeal Case Tracking System (P-TACTS), with a copy served via electronic mail to the following email address, as authorized in the Petition:

Jason S. Shull
jshull@bannerwitcoff.com
Christopher Roth
croth@bannerwitcoff.com

/jason e mckinnie/
Jason E. McKinnie