US006174252B1

(12) **United States Patent**
Mizek

(10) **Patent No.: US 6,174,252 B1**
(45) **Date of Patent: *Jan. 16, 2001**

(54) **ARROWHEAD WITH INTERCHANGEABLE BLADES**

(75) Inventor: **Robert S. Mizek**, Downers Grove, IL (US)

(73) Assignee: **New Archery Products Corp.**, Forest Park, IL (US)

(*) Notice: Under 35 U.S.C. 154(b), the term of this patent shall be extended for 0 days.

This patent is subject to a terminal disclaimer.

(21) Appl. No.: **09/366,452**

(22) Filed: **Aug. 3, 1999**

Related U.S. Application Data

(60) Division of application No. 08/907,231, filed on Aug. 6, 1997, now Pat. No. 5,941,784, which is a continuation-in-part of application No. 08/672,624, filed on Jun. 28, 1996, now abandoned, which is a continuation-in-part of application No. 08/368,805, filed on Jan. 5, 1995, now Pat. No. 5,564,713.

(51) **Int. Cl.**[7] **F42B 6/08**
(52) **U.S. Cl.** **473/583**
(58) **Field of Search** ..... 473/578, 582, 473/583, 584, FOR 216, FOR 219, FOR 221, FOR 222

(56) **References Cited**

U.S. PATENT DOCUMENTS

188,231 * 3/1877 Booker .
199,966 * 2/1878 Elmer .
D. 279,813 * 7/1985 Palizzolo .
D. 342,303 * 12/1993 Johnson .
D. 370,246 * 5/1996 Johnson .
589,738 * 9/1897 Miller .
727,724 * 5/1903 Weil .
1,372,579 * 3/1921 Weishaupt .
1,430,343 * 9/1922 Wannamacker .
2,289,284 * 7/1942 Chandler .
2,568,417 * 9/1951 Steinbacher .
2,820,634 * 1/1958 Vance .
2,859,970 * 11/1958 Doonan .
2,939,708 * 6/1960 Scheib .

(List continued on next page.)

FOREIGN PATENT DOCUMENTS

1056094 * 1/1967 (GB) .

OTHER PUBLICATIONS

"Vortex Broadheads" advertisement, Cabela's 1994 Archery Pro Shop Catalog, Sidney, Nebraska, p. 25, Items L and M.*
"Knife Wing II" advertisement, Knifewing Archery, Meeker, Colorado.*
Cabela's 1991 Annual Fall Catalog, Jul. 1991, p. 177, Vortex Broadheads.*
"Vortex Broadheads" advertisement, Cabela's 1994 Annual Fall Catalog, Nov. 1994, p. 249.*

Primary Examiner—John A. Ricci
(74) *Attorney, Agent, or Firm*—Pauley Petersen Kinne & Fejer

(57) **ABSTRACT**

An arrowhead having at least one blade, preferably between two to six blades, which are interchangeably mounted in a pivotal or a fixed position with respect to a blade carrying body. A pin is used to retain a corresponding blade in a pivotal or a fixed position with respect to a blade carrying body. When the blade is pivotally mounted a bias force of a retaining member is preferably selected so that each blade remains in a normally closed position during flight or during handling of the arrowhead, but yet responsively and quickly moves to a fully open position upon impact or when a sufficient opening force is applied to the blade. A blunt leading surface of the pivotal blade in its normally closed position presents a convex curve to the target surface thereby insuring good transfer of opening force to the blade when striking the target.

15 Claims, 14 Drawing Sheets

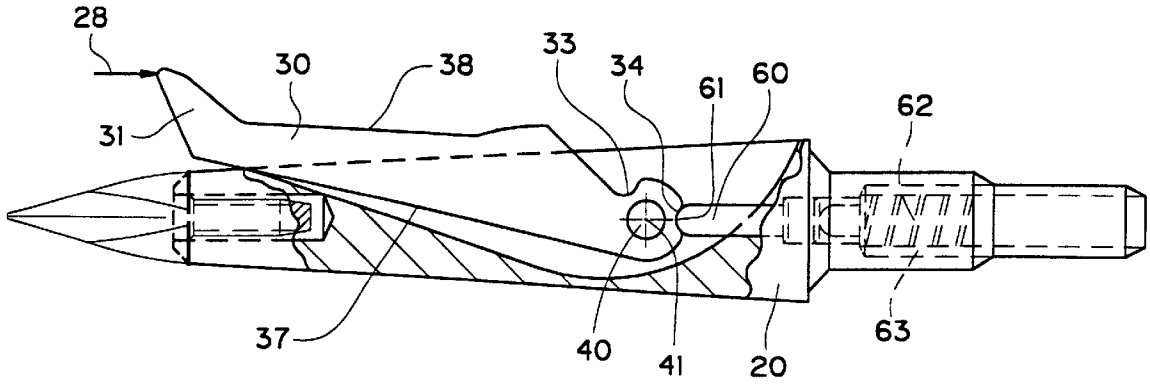

U.S. PATENT DOCUMENTS

3,036,396 * 5/1962 Swails .
3,578,328 * 5/1971 Rickey .
3,738,657 * 6/1973 Cox .
4,099,720 * 7/1978 Zeren .
4,166,619 * 9/1979 Bergmann et al. .
4,405,133 * 9/1983 Cartwright .
4,452,460 * 6/1984 Adams .
4,529,208 * 7/1985 Simo .
4,579,348 * 4/1986 Jones .
4,615,529 * 10/1986 Vocal .
4,676,512 * 6/1987 Simo .
4,807,382 * 2/1989 Albrecht .
4,932,671 * 6/1990 Anderson .
4,940,246 * 7/1990 Stagg .
4,973,060 * 11/1990 Herzing .
4,976,443 * 12/1990 DeLucia .
4,998,738 * 3/1991 Puckett .
5,066,021 * 11/1991 DeLucia .
5,078,407 * 1/1992 Carlston .
5,082,292 * 1/1992 Puckett et al. .
5,083,798 * 1/1992 Massey .
5,090,709 * 2/1992 Johnson .
5,100,143 * 3/1992 Puckett .
5,102,147 * 4/1992 Szeluga .
5,111,581 * 5/1992 Collins .
5,112,063 * 5/1992 Puckett .
5,172,916 * 12/1992 Puckett .
5,178,398 * 1/1993 Eddy .
5,286,035 * 2/1994 Ward .
5,322,297 * 6/1994 Smith .
5,458,341 * 10/1995 Forrest et al. .
5,472,213 * 12/1995 Dudley .
5,857,930 * 1/1999 Troncoso 473/583
5,879,252 * 3/1999 Johnson 473/583
5,941,784 * 8/1999 Mizek 473/584

* cited by examiner

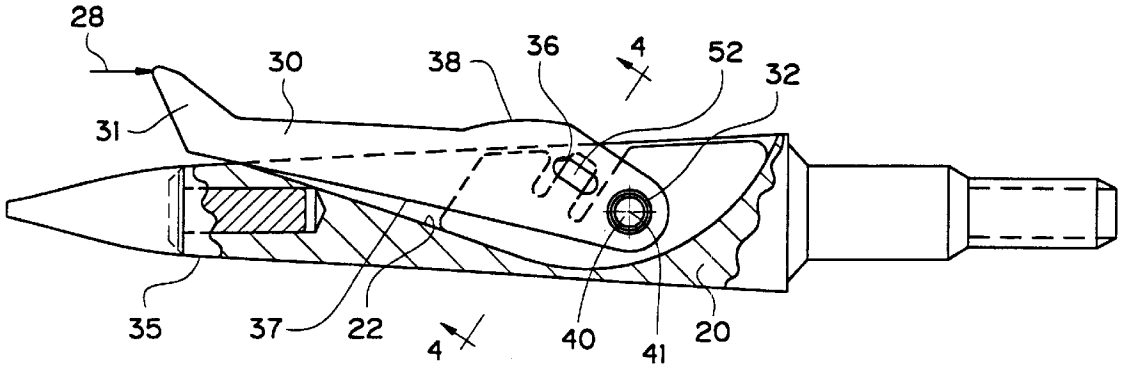
28
30
38
36
4
52
32
31
35
37
22
4
40
41
20

FIG. 1

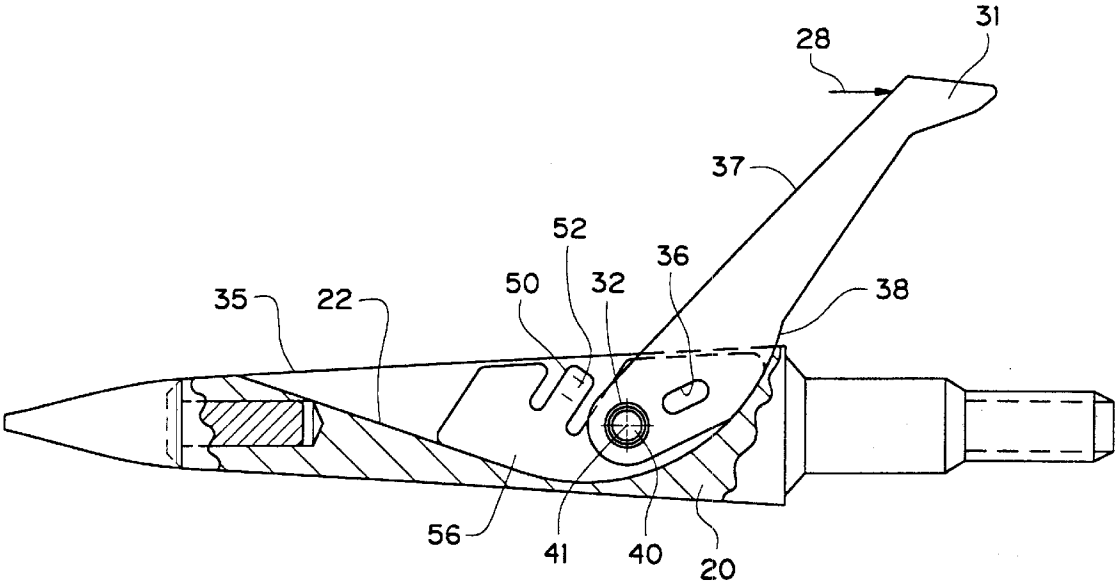
31
28
37
52
36
35
22
50
32
38
56
41
40
20

FIG. 2

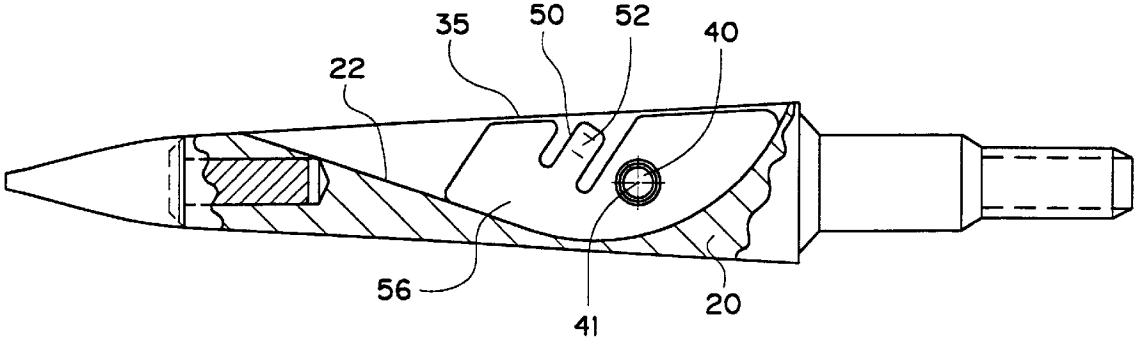

FIG. 3

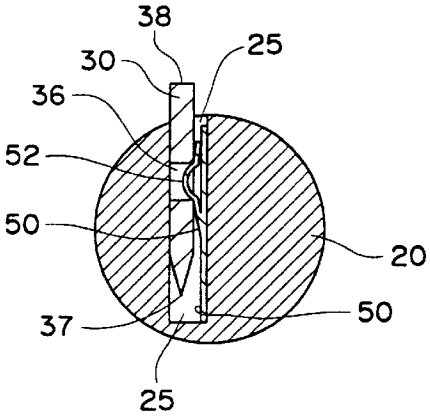

FIG. 4

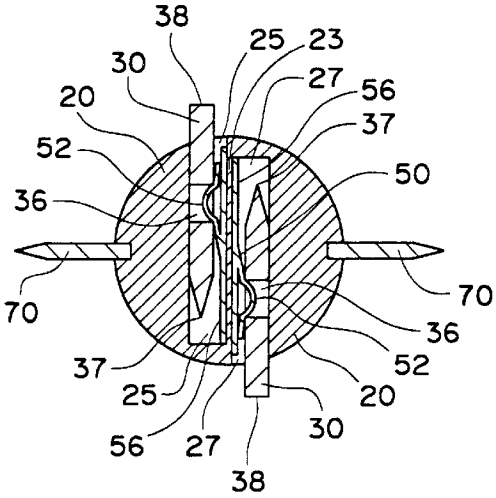

FIG. 4A

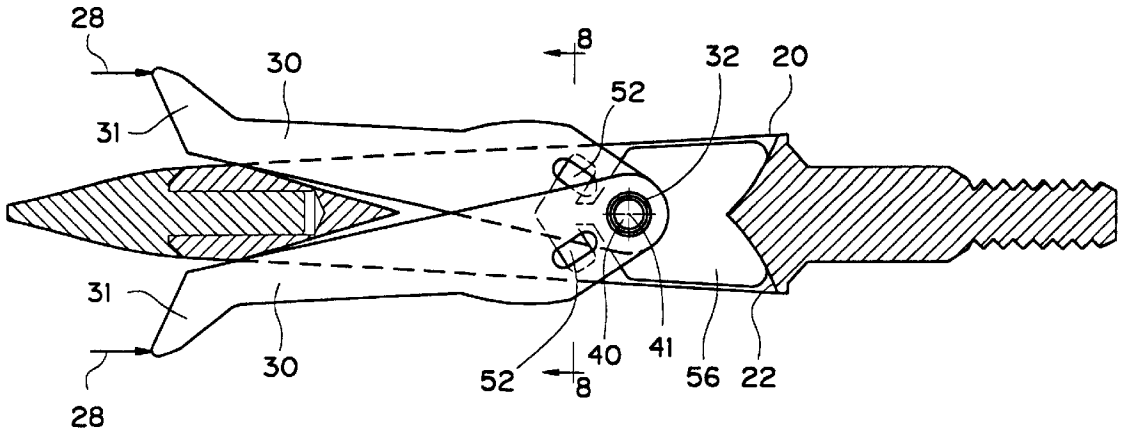
28
30
8
32
20
52
31
31
30
40
41
52
8
56
22
28

FIG. 5

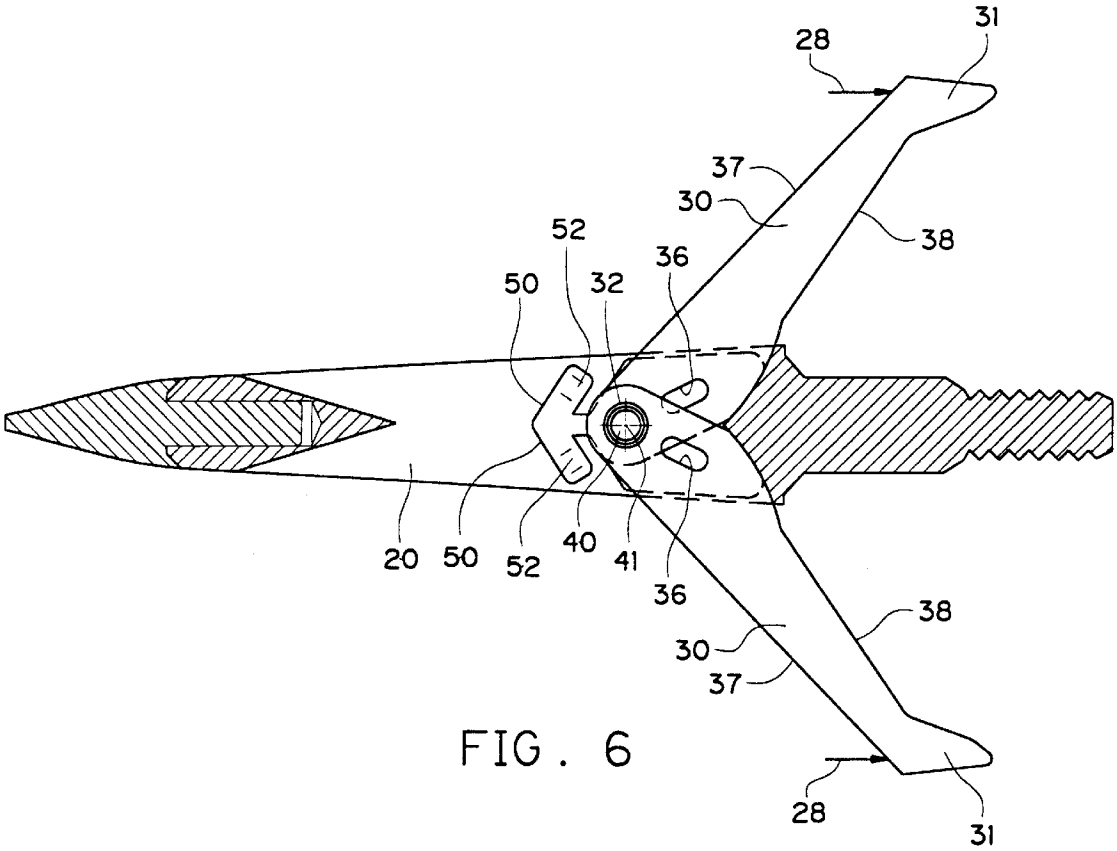
31
28
37
30
38
52
36
50
32
20
50
52
40
41
36
38
30
37
28
31

FIG. 6

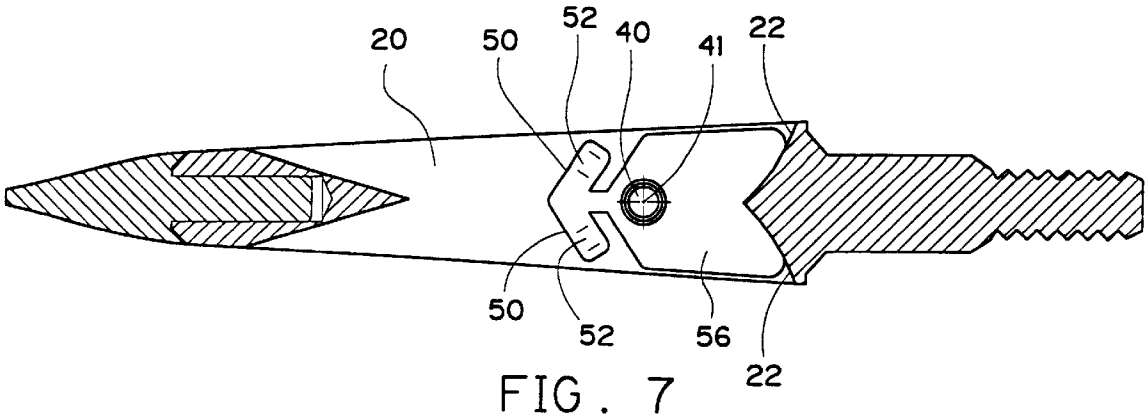

FIG. 7

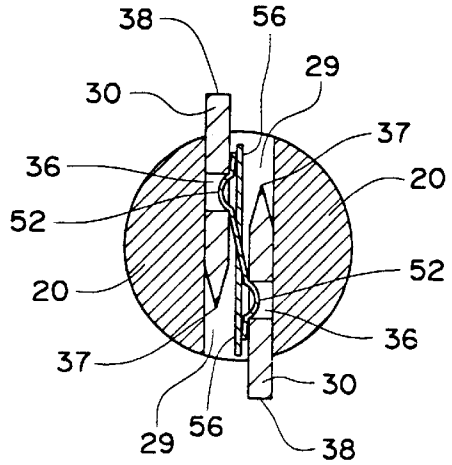

FIG. 8

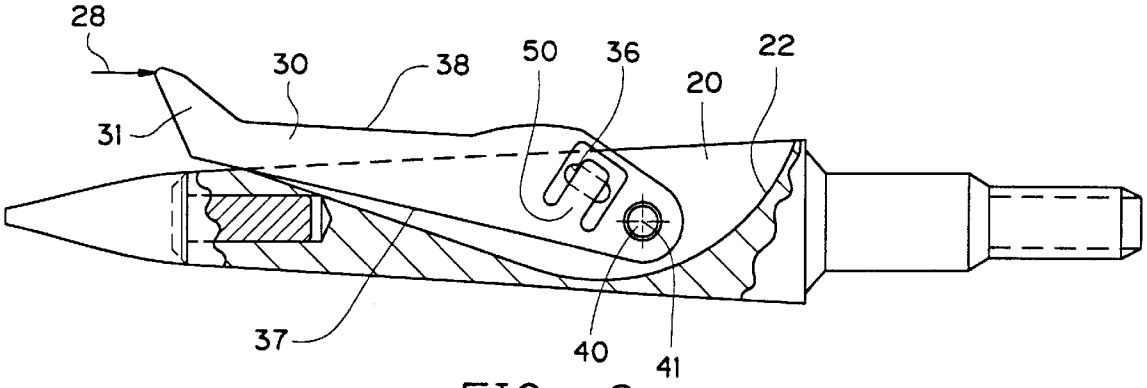

FIG. 9

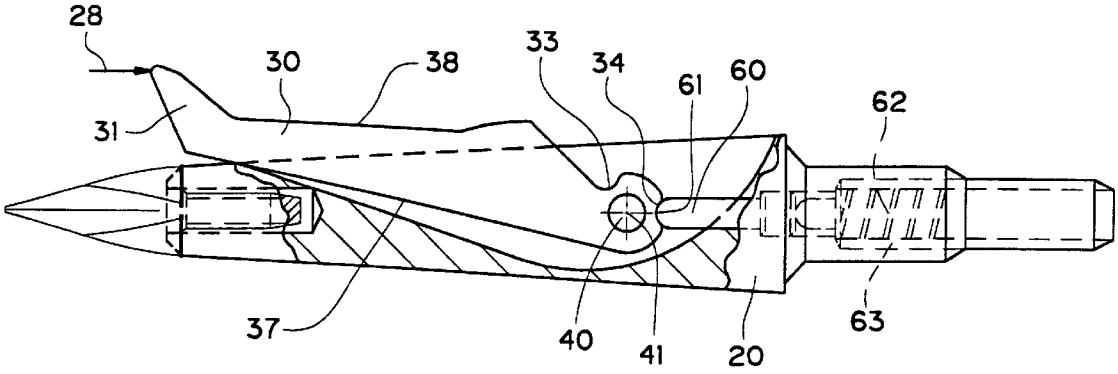
28
30
38
33
34
61
60
62
31
37
40
41
20
63

FIG. 10

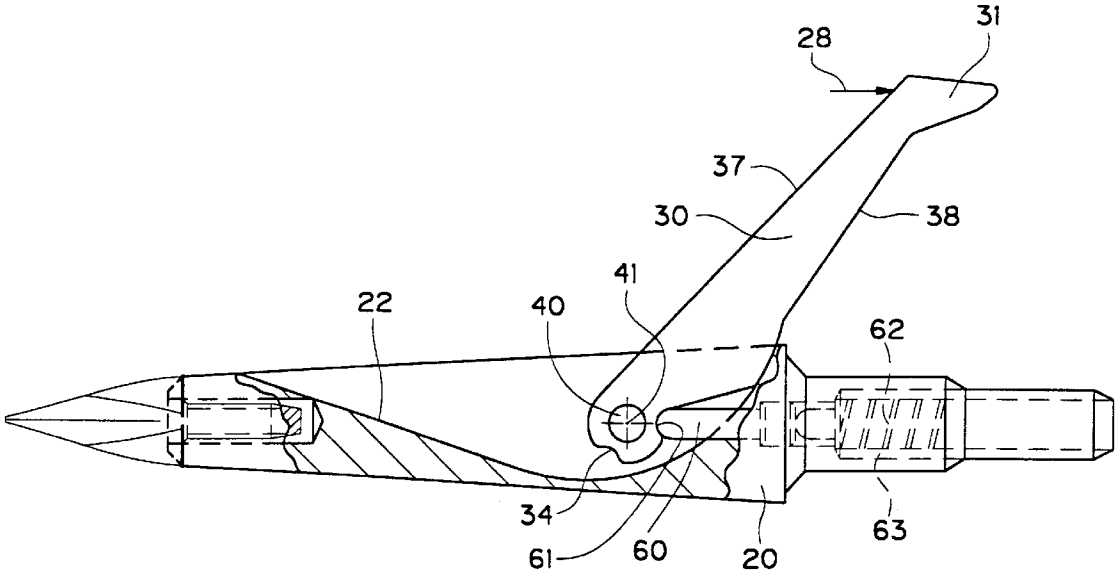
31
28
37
30
38
41
22
40
62
34
61
60
20
63

FIG. 11

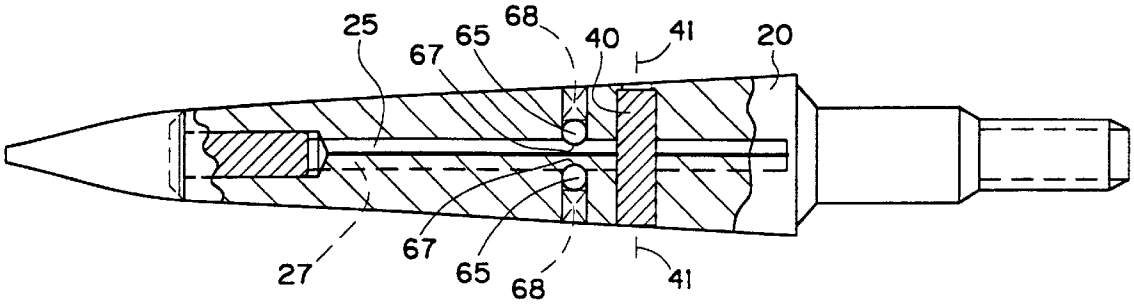

FIG. 12

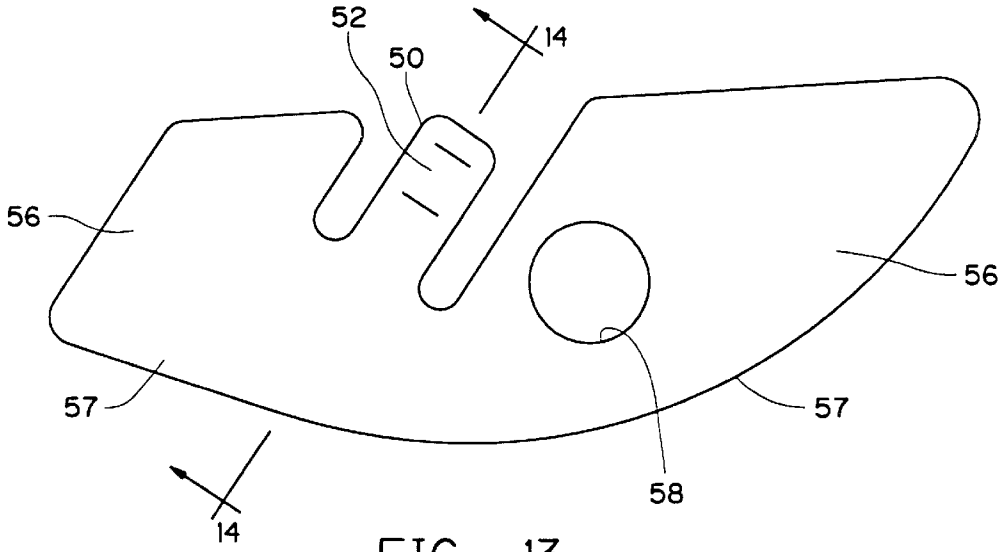

FIG. 13

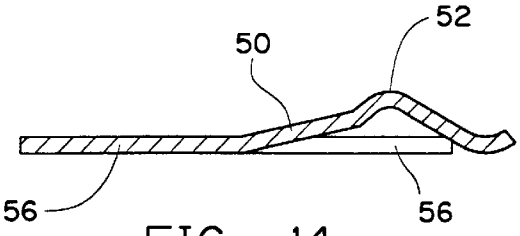

FIG. 14

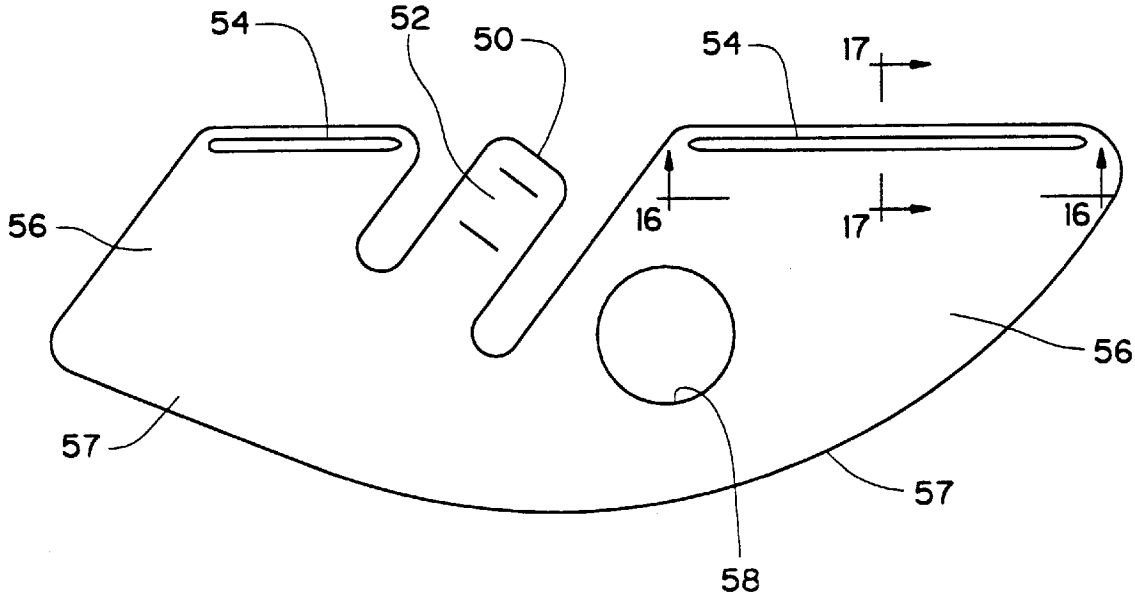

FIG. 15

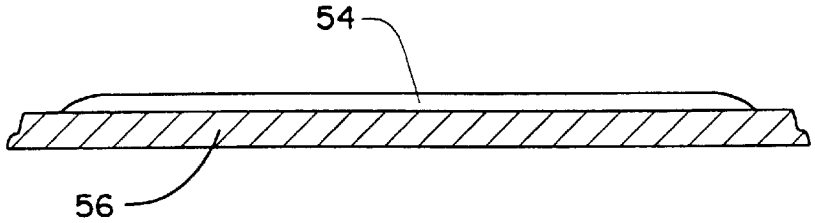

FIG. 16

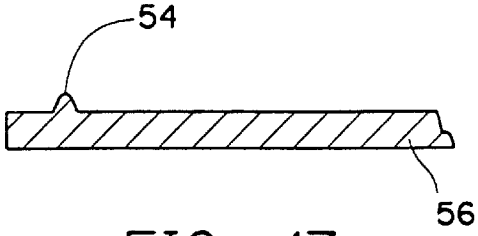

FIG. 17

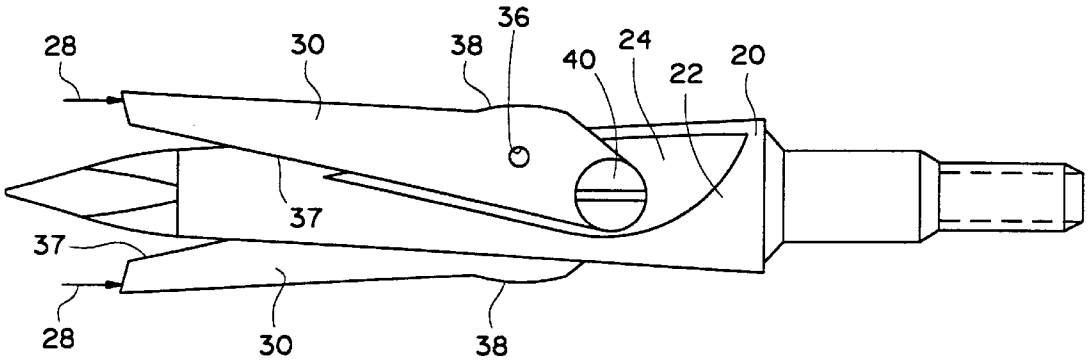

FIG. 18

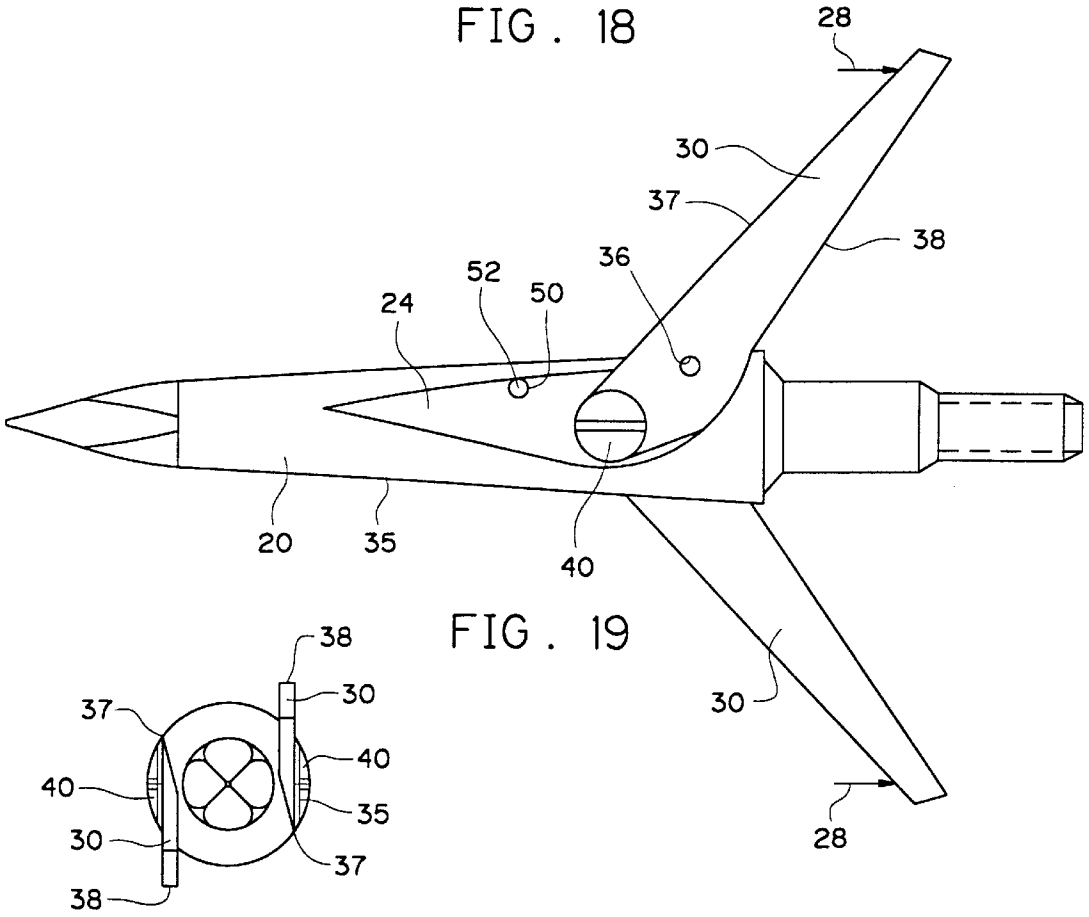

FIG. 19

FIG. 20

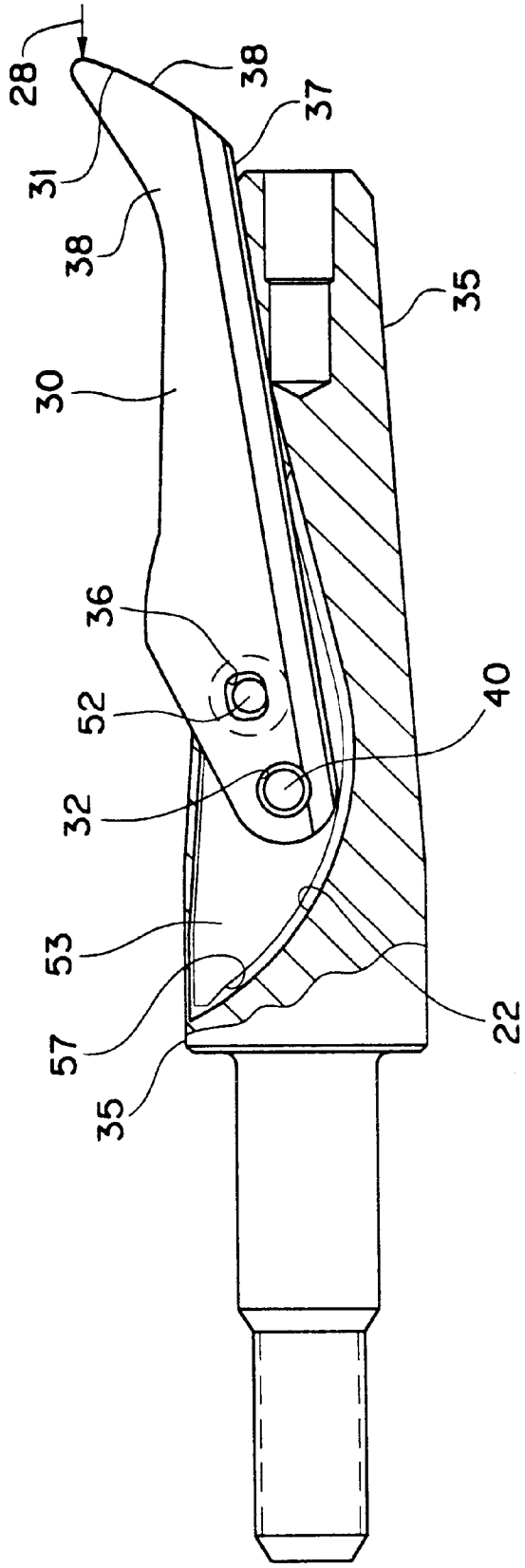

FIG. 21

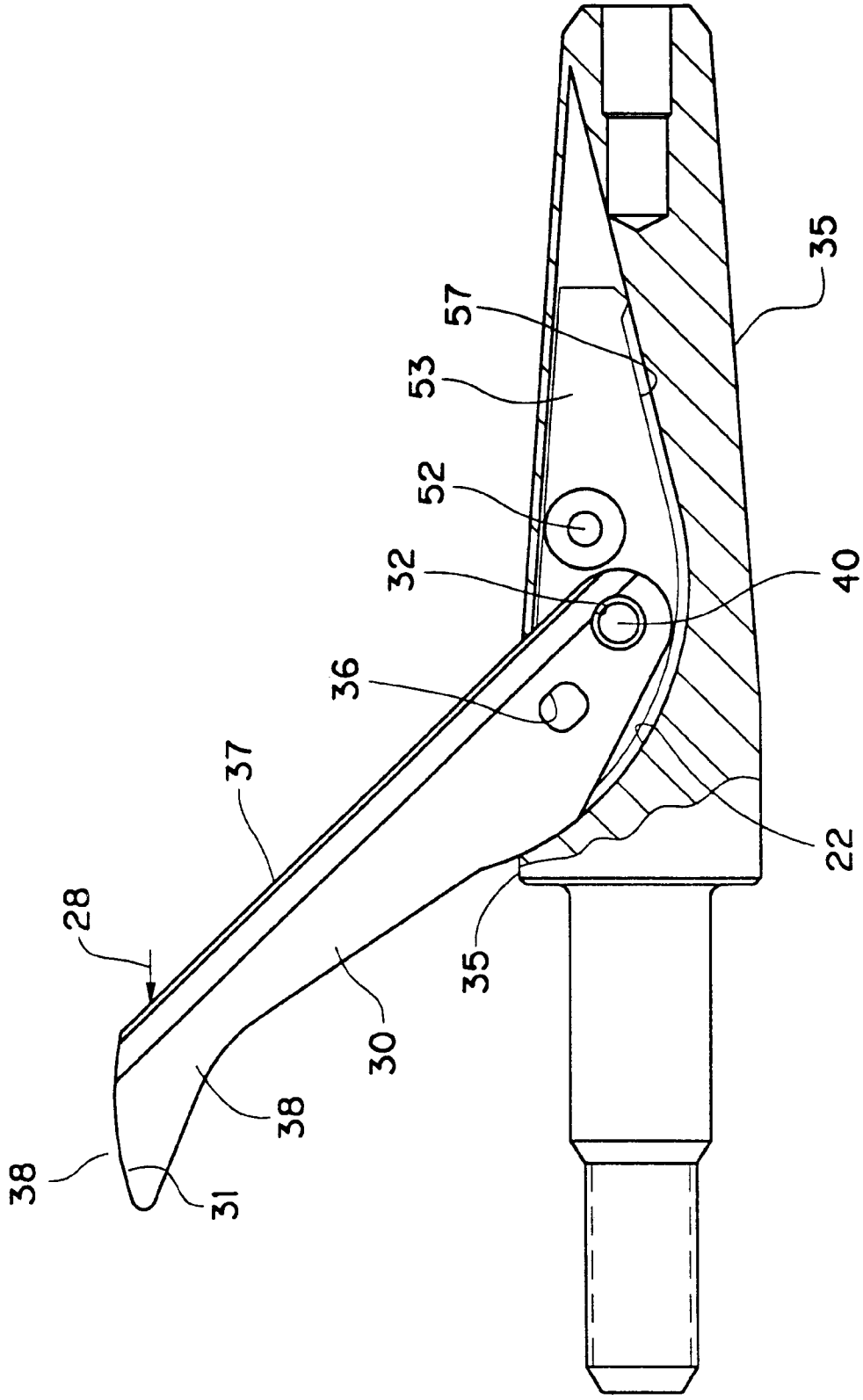

FIG. 22

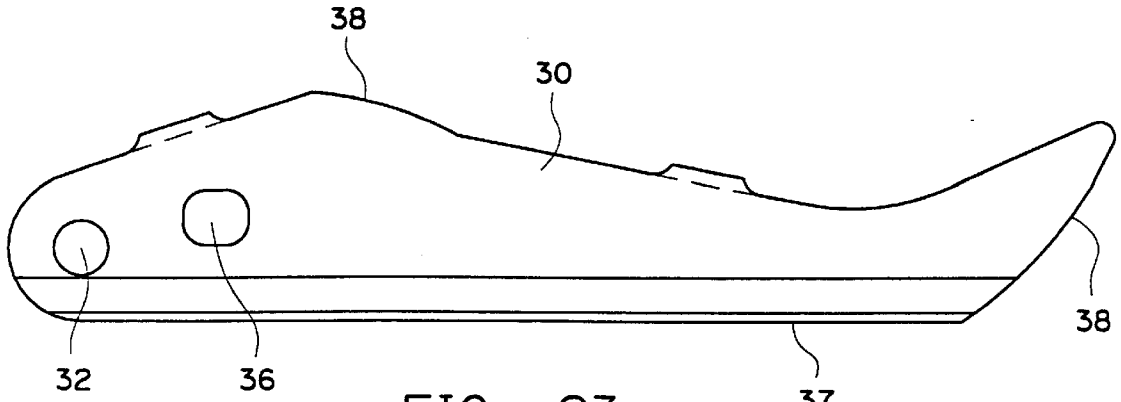

FIG. 23

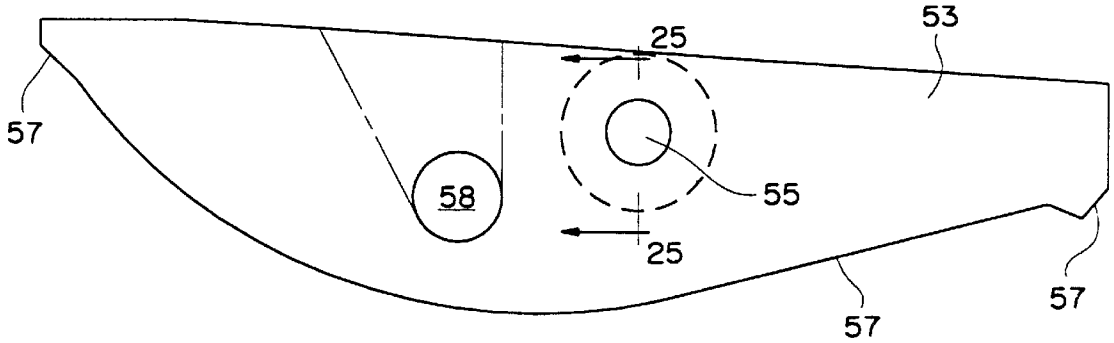

FIG. 24

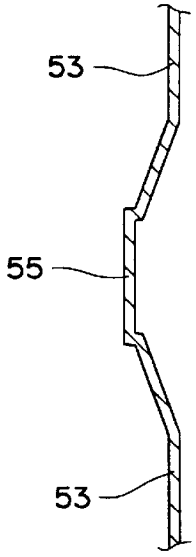

FIG. 25

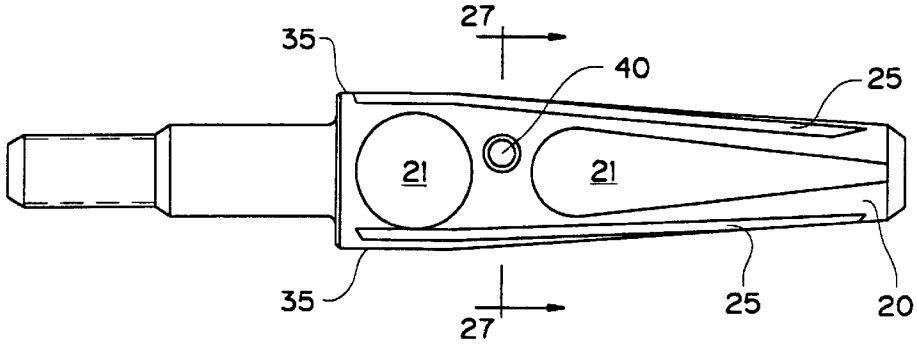

FIG. 26

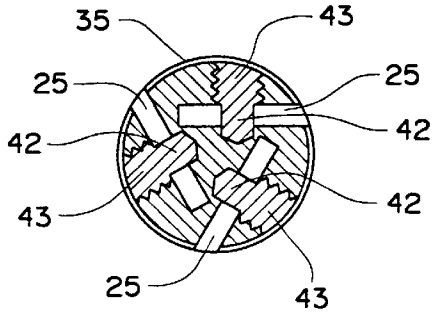

FIG. 27

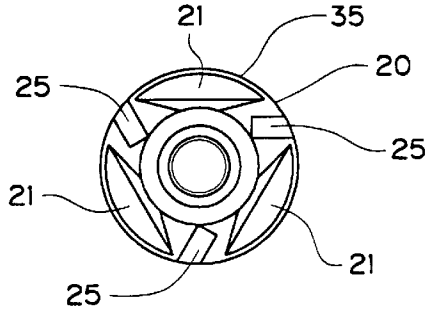

FIG. 28

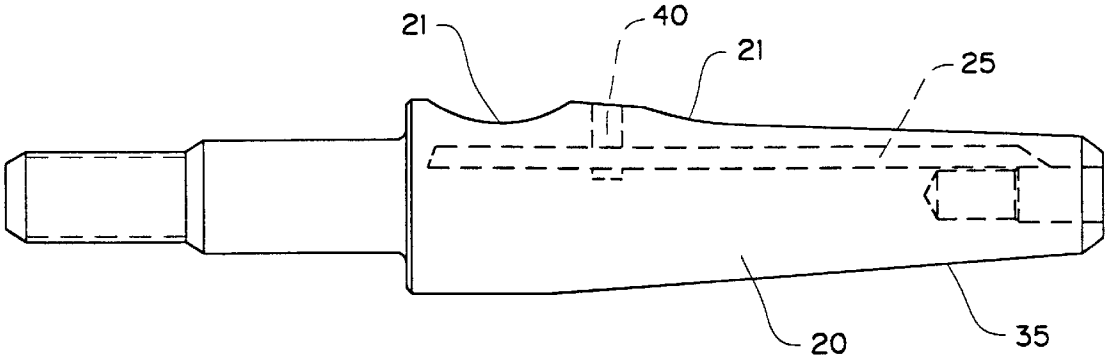

FIG. 29

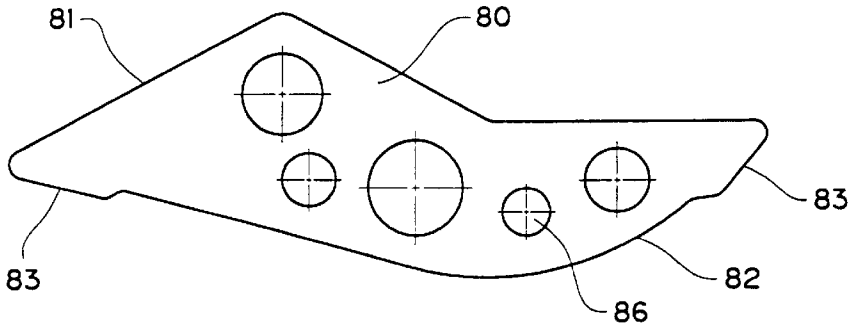

FIG. 30

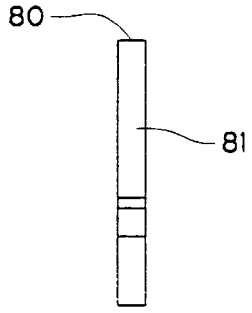

FIG. 31

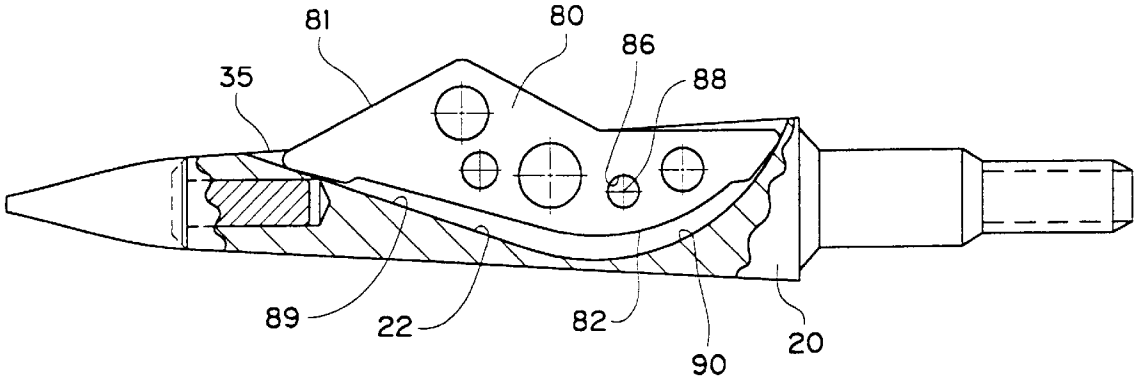

FIG. 32

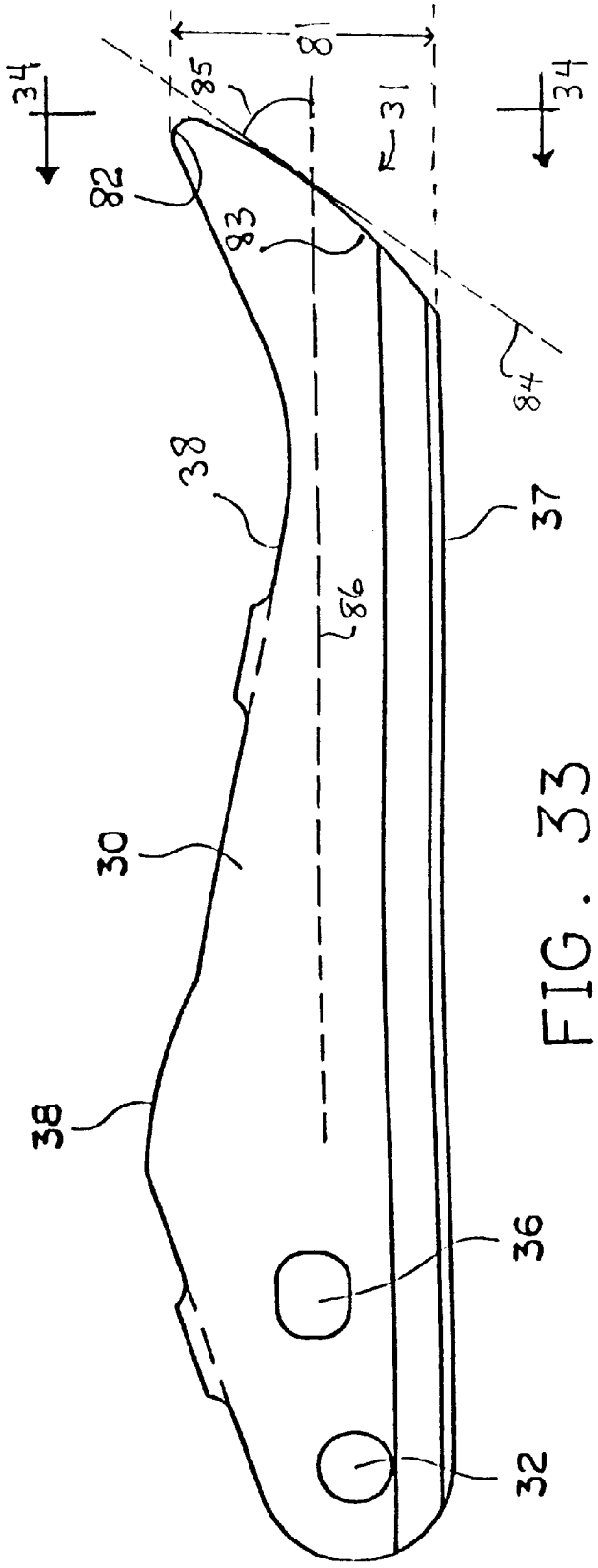

FIG. 33

ARROWHEAD WITH INTERCHANGEABLE BLADES

This application is a divisional of patent application Ser. No. 08/907,231 filed Aug. 6, 1997, now U.S. Pat. No. 5,941,784, which was a continuation-in-part patent application of Ser. No. 08/672,624, filed on Jun. 28, 1996, and now abandoned, which is a continuation-in-part patent application of Ser. No. 08/368,805, filed on Jan. 5, 1995, now U.S. Pat. No. 5,564,713, which issued Oct. 15, 1996.

BACKGROUND OF THE INVENTION

1. Field of the Invention

This invention relates to an arrowhead with interchangeable blades that can operate as either a fixed-blade arrowhead or a blade-opening arrowhead having at least one blade which is pivotally mounted to move between a fully open position and a fully closed position wherein there is a positive snap locking blade retention system that maintains each blade in a normally closed position.

2. Description of Prior Art

In the archery industry, many manufacturers have attempted to simultaneously achieve an arrowhead that has aerodynamic properties similar to those associated with non-bladed arrowheads known as field points or nib points, while also achieving effective cutting areas provided by bladed arrowheads, which are often referred to as broadheads. Broadhead blades which are exposed during flight often result in undesirable steering of the front portion of the arrow, causing the arrow to deviate from a perfect flight path that coincides with a longitudinal axis of the arrow shaft, when loaded or drawn within an archery bow.

By reducing the surface area of a broadhead blade, the undesirable steering effects can be reduced. However, when the surface area of a blade is significantly reduced, the structural integrity is diminished. Also, by reducing the surface area of a blade, the cutting area within a target or game is also reduced, resulting in a less effective entrance and exit wound.

Conventional blade-opening arrowheads have been designed so that a substantial portion of the blade is hidden within the body of the arrowhead, such as during flight of the arrow. Upon impact, such blades are designed to open and thereby expose a cutting surface or sharp edge of the blade. When the blades of such conventional arrowheads are closed and substantially hidden within the body, the exposed surface area is reduced and thus produces relatively less undesirable steering effects.

Many of such conventional blade-opening arrowheads rely upon complex mechanisms, some of which fail to open because of a significant holding or closing force that must be overcome, and others that open prematurely because of structural deficiencies within the blade carrying body that fail upon impact, resulting in non-penetration of the arrow. With such relatively complex mechanisms, dirt or other materials that may enter such conventional arrowheads can affect the reliability of the arrowhead, particularly after prolonged use.

Other conventional broadheads which have blades partially hidden within the body use annular retaining rings, such as O-rings, wraps, bands and the like, in order to maintain the blades in a closed position during flight. Upon impact, such annular retaining rings are designed to sheer or roll back along the opening blades, in order to allow the blades to move to an open position. Quite often, such

conventional annular retaining rings are prone to cracking, particularly when the elastomer material dries out. Upon release of a bowstring, the rapid acceleration and thus significant opening forces move the blades in an opening direction. The conventional annular retaining rings counteract such opening forces. However, when the ring material dries out, cracks or is otherwise damaged, the blades may open prematurely, resulting in significant danger or injury to the archer.

Many of the annular retaining rings are designed for one use and thus must be replaced after each use. In addition to the cost involved with supplying such consumable item, the annular retaining ring is difficult and time-consuming to install, such as when hunting, particularly during inclement weather. Furthermore, the material properties of such conventional annular retaining rings can be affected by temperature changes, thereby resulting in different bias forces that cause the blade to open prematurely or to not open when desired.

U.S. Pat. No. 5,090,709 teaches an arrowhead with extendable blades positioned adjacent fixed blades. The extendable blades are pivotally connected to a body. A ring releasably holds the extendable blades within corresponding slots within the body.

U.S. Pat. No. 5,286,035 teaches an arrowhead that has a sharpened blade, pivotally mounted within a slot in the body of the arrowhead. A rubber O-ring is used to hold the blade in a temporarily stationary position, centered within the slot in the body. Upon impact, the rubber O-ring slides rearward onto the arrow shaft and allows the blade to pivot to either side of the arrowhead body.

U.S. Pat. Nos. 5,112,063, 4,998,738 and 5,082,292 each disclose a broadhead with deployable cutting blades that are connected by pivot pins to a plunger. The cutting blades pivot between an open cutting position and a closed non-barbed position.

U.S. Pat. No. 5,102,147 discloses a ballistic broadhead assembly that has blades pivotally mounted on an actuating plunger. Upon impact, the actuating plunger thrusts the blades outwardly and forwardly.

It is apparent from the conventional blade-opening arrowheads that there is a need for a blade-opening arrowhead that maintains each blade in a closed and locked position during flight, and that allows the blades to responsively free-wheel to an open position when a sufficient opening force is applied to the blade. It is apparent that there is a need for a blade-opening arrowhead that does not require consumable items, such as O-rings, wraps, bands and the like, to hold the blades in a closed position. It is also apparent that there is a need for an arrowhead that will accommodate fixed blades in addition to and/or in lieu of pivotally mounted blades, for example to accommodate dull practice blades or other sharpened fixed blades.

SUMMARY OF THE INVENTION

It is one object of this invention to provide an arrowhead with interchangeable blades wherein a dull blade or a sharpened blade can be interchanged with a pivotally mounted blade.

It is another object of this invention to provide an arrowhead with pivotally mounted blades that can be maintained in a normally closed position, wherein a major portion of each blade is housed within a slot of the blade carrying body, and that pivot rearwardly into a fully open position upon target impact or upon experiencing a similar opening force.

It is another object of this invention to provide an arrowhead with pivotally mounted blades that each have a

rounded, blunt tip portion that is the portion of the blade that initially contacts a target.

It is another object of this invention to provide a blade-opening arrowhead wherein various types of springs and engaging elements can be used to maintain pivotally mounted blades in a normally closed position but which also provides a bias force that can be overcome by an opening force applied to the blade when in the closed position.

It is still another object of this invention to eliminate the need for consumable mechanical components, such as O-rings, bands, wraps and the like, which are conventionally used to maintain opening blades in a closed position during flight and also during handling of the arrowhead.

It is yet another object of this invention to provide an improved design for a blade which is used in a blade-opening arrowhead.

The above and other objects of this invention are accomplished with an arrowhead that has a blade carrying body, which is also known to those skilled in the art as a ferrule. In one preferred embodiment according to this invention, at least one dull or sharpened fixed blade, preferably 2–4 dull or sharpened fixed blades, is each mounted in a fixed position with respect to the blade carrying body. In another preferred embodiment according to this invention, at least one blade, preferably 2–4 blades, are each pivotally mounted with respect to the blade carrying body. In one preferred embodiment according to this invention, a pivot shaft is mounted with respect to the blade carrying body. For example, the pivot shaft can be completely positioned within the blade carrying body so that no portion of the pivot shaft extends beyond the skin or outside surface of the blade carrying body. Each blade, fixed or pivoted, preferably has a slot or a through hole in which the pivot shaft is matingly engaged, thus allowing the blade to be fixed or to pivot with respect to the blade carrying body.

In one preferred embodiment, each blade pivots between a normally closed position and a fully open position. In the normally closed position of the pivotal blade and in the mounted position of the fixed blade, each blade is preferably positioned such that a major or a significant portion of the blade is housed within a slot formed by the blade carrying body. In the fully closed position of the pivotal blade, a sharp edge of the blade is preferably non-exposed for safety reasons. A major or significant portion of each blade, fixed or pivotal, is preferably housed within the blade carrying body, so that during flight the arrowhead according to this invention achieves very favorable aerodynamic qualities and characteristics.

In the fully open position of the pivotal blade, each blade preferably has a blunt edge, opposite the sharp edge, which abuts or contacts a correspondingly mateable base edge formed by the blade carrying body, preferably in an area where the blade carrying body forms the slot that houses the blade. In one preferred embodiment according to this invention, the blunt edge of the blade has an overall generally convex arcuate section and the blade carrying body has a corresponding generally concave arcuate section. Thus, when the pivotal blade is in a fully open position or when the fixed blade is in a mounted position, there is preferably but not necessarily substantial bearing surfaces contact between the blunt edge of the blade and the base edge of the blade carrying body. By providing increased surface area contact between the blade and the blade carrying body, impact forces are better transferred through the blade, through the blade carrying body and into the arrow shaft, as compared to line or point contact. The arrowhead structure according to this invention acts more as an integral unit as opposed to a conventional blade-opening arrowhead wherein the impact forces are typically transferred through the pivot shaft or a similar component.

According to one preferred embodiment of this invention, the pivotal blade is held in the normally closed position by contacting an engaging element with a portion of the blade. A bias force, such as from a spring element, is used to urge the engaging element against the pivotal blade.

In one preferred embodiment according to this invention, the engaging element is a generally flattened tab which has a raised portion, which is also referred to as an upset. In another preferred embodiment according to this invention, the engaging element is a raised portion or a detent formed in a leaf spring. In such preferred embodiments, each blade has a recess and in the closed position, the raised portion, detent or upset is mateably engaged within the recess. In one preferred embodiment, the spring element can be the generally flattened tab itself, acting as a leaf spring.

In another preferred embodiment according to this invention, the locations of the raised portion and the recess can be interchanged so that the recess is formed within the generally flattened tab or leaf spring and the raised portion is formed on the blade. It is also apparent that the raised portion and the recess can have any suitably shaped cross section or overall shape.

In another preferred embodiment according to this invention, the engaging element is a plunger shaft that is slidably mounted within the blade carrying body. In such preferred embodiment, the spring element is a coil spring mounted in such a manner that it normally urges the plunger shaft toward a corresponding pivotal blade. The corresponding pivotal blade has a notch which is shaped to mate with or accommodate the shape of the plunger shaft. When the blade is in the normally closed position, the plunger shaft is mated within the notch to prevent opening movement of the pivotal blade.

In the preferred embodiments of this invention as discussed above. the spring element is preferably designed so that a sufficient bias force is applied to the pivotal blade in order to prevent the pivotal blade from pivoting out of the normally closed position even when relatively small forces are applied to the pivotal blade in an opening, direction, such as when handling the arrowhead or during flight of the arrowhead. The spring element is also designed so that the bias force is easily overcome when a more significant force is applied in the opening direction, such as when the arrowhead impacts a target.

Other preferred embodiments of the engaging element and the spring element will be discussed in the following description of this invention. The blade-opening arrowhead according to this invention requires no consumable element, such as an O-ring, a band, a wrap or other similar element, in order to maintain the pivotal blades in a normally closed position. Eliminating such consumable element associated with conventional blade-opening arrowheads improves the safety aspects of the arrowhead, significantly reduces the cost for using the arrowhead by eliminating the need for a user to purchase consumable goods, and also eliminates awkward handling of the arrowhead when attempting to install such conventional consumable element, particularly during a time-critical hunt.

BRIEF DESCRIPTION OF THE DRAWINGS

The above-mentioned and other features and objects of this invention will be better understood from the following detailed description taken in conjunction with the drawings wherein:

FIG. **1** is a partial cross-sectional front view of a blade-opening arrowhead, exposing a pivotally mounted blade at least partially housed within a closed slot of a blade carrying body, with the blade in a closed position, according to one preferred embodiment of this invention;

FIG. **2** is similar to FIG. **1**, but with the pivotal blade in an open position;

FIG. **3** is a partial cross-sectional front view of the blade-opening arrowhead shown in FIG. **1**, with the pivotal blade removed for clearly showing bias means used to maintain the pivotal blade in a normally closed position, according to one preferred embodiment of this invention;

FIG. **4** is a sectional view taken along line **4—4**, as shown in FIG. **1**;

FIG. **4**A is a sectional view similar to the sectional view of FIG. **4**, but with a blade carrying body having two slots for housing two corresponding blades;

FIG. **5** is a partial cross-sectional front view of a blade-opening arrowhead, exposing two pivotally mounted blades each in a closed position. according to another preferred embodiment of this invention;

FIG. **6** is a partial cross-sectional front view similar to that shown in FIG. **5**, but with the pivotal blades in a fully open position;

FIG. **7** is a partial cross-sectional front view of the blade-opening arrowhead shown in FIG. **5**, with the pivotal blades removed for clearly showing bias means used to maintain the pivotal blade in a normally closed position, according to another preferred embodiment of this invention;

FIG. **8** is a sectional view taken along line **8—8**, as shown in FIG. **5**;

FIG. **9** is a partial cross-sectional front view of a blade-opening arrowhead, wherein bias means are mounted to the pivotal blade, according to another preferred embodiment of this invention;

FIG. **10** is a partial cross-sectional front view of a blade-opening arrowhead, wherein bias means for maintaining the pivotal blade in a normally closed position comprise a spring-loaded plunger shaft, and the pivotal blade is in a fully closed position, according to another preferred embodiment of this invention;

FIG. **11** shows the same blade-opening arrowhead as shown in FIG. **10**, but with the pivotal blade in a fully open position;

FIG. **12** shows a partial cross-sectional front view of a blade-opening arrowhead, wherein bias means for urging the pivotal blade into a normally closed position comprise a spring-loaded bearing element, according to another preferred embodiment of this invention;

FIG. **13** is a front view of a spring element, according to one preferred embodiment of this invention;

FIG. **14** is a sectional view taken along line **14—14**, of the spring element as shown in FIG. **13**;

FIG. **15** is a front view of a spring element, according to another preferred embodiment of this invention;

FIG. **16** is a sectional view taken along line **16—16**, of the spring element as shown in FIG. **15**;

FIG. **17** is a sectional view taken along line **17—17**, of the spring element as shown in FIG. **15**;

FIG. **18** is a front view of a blade-opening arrowhead in a closed position, wherein the pivotal blades are each mounted externally with respect to the blade carrying body, according to one preferred embodiment of this invention;

FIG. **19** shows the same blade-opening arrowhead as shown in FIG. **18**, but with both pivotal blades in a fully open position;

FIG. **20** is a side view of the blade-opening arrowhead shown in FIG. **19**, looking in a direction from left to right;

FIG. **21** is a partial cross-sectional front view of a blade-opening arrowhead, exposing a pivotally mounted blade at least partially housed within a closed slot of a blade carrying body, with the pivotal blade in a closed position, according to another preferred embodiment of this invention;

FIG. **22** is similar to FIG. **21**, but with the pivotal blade in an open position;

FIG. **23** is a front view of a pivotal blade, according to one preferred embodiment of this invention;

FIG. **24** is a front view of a leaf spring, according to one preferred embodiment of this invention;

FIG. **25** is a sectional view of a raised portion, taken along line **25—25**, as shown in FIG. **24**;

FIG. **26** is a front view of a blade carrying body, according to one preferred embodiment of this invention;

FIG. **27** is a sectional view taken along line **27—27**, as shown in the blade carrying body of FIG. **26**;

FIG. **28** is a side view looking toward a forward portion of the blade carrying body as shown in FIG. **26**;

FIG. **29** is a partial cross-sectional front view of a blade carrying body, according to another preferred embodiment of this invention;

FIG. **30** is a front view of a fixed blade, according to another preferred embodiment of this invention; and

FIG. **31** is a side view of the fixed blade as shown in FIG. **30**;

FIG. **32** is a partial cross-sectional front view of a fixed blade mounted within a slot of a blade carrying body, according to one preferred embodiment of this invention,

FIG. **33** is a front view of a pivotal blade, according to one preferred embodiment of this invention further explaining the leading surface of the blade.

DESCRIPTION OF PREFERRED EMBODIMENTS

FIGS. **1–4**, **21** and **22** show a blade-opening arrowhead, according to two different preferred embodiments of this invention. As shown in FIGS. **1**, **2**, **21** and **22** pivot means are used to pivotally mount at least one blade **30**, preferably 2–4 blades **30**, with respect to blade carrying body **20**. As clearly shown in FIGS. **1**, **12**, **21** and **27** pivot shaft **40** is mounted with respect to blade carrying body **20**. Each blade **30** preferably has a through hole or a blind bore within which pivot shaft **40** is mateably mounted. By forming a relatively tight clearance between blade **30** and pivot shaft **40**, blade **30** can easily rotate about pivot shaft **40**, without significant blade wobble. It is apparent that the contacting surfaces between pivot shaft **40** and blade **30** can be machined or polished to provide a relatively tight tolerance with relatively minimal friction. Once blade **30** is unlocked or released from the normally closed position shown in FIGS. **1** and **21** and pivots towards the fully open position shown in FIGS. **2** and **22**, it is important for blade **30** to easily pivot or free-wheel. Such easy pivoting or free-wheeling motion assures easy opening of blades **30** when the arrowhead impacts a target or when a sufficient opening force **28** is applied to blade **30**.

Opening force **28** causes blade **30** to pivot in a clockwise direction, for example, as shown in FIGS. **1** and **2**, about

pivot shaft **40**. As the arrowhead impacts a target, the target surface preferably impinges upon tip portion **31** of blade **30** and thereby provides the necessary opening force **28** for moving each blade **30** from the closed position to the open position. FIGS. **21–23** show one preferred embodiment of a blade that is particularly suitable for ensuring that blade **30** pivots to the open position upon blade-to-target impact. In the closed position of blade **30**, the forward most portion of the blade is preferably but not necessarily rounded and blunt thereby providing a bearing surface rather than a cutting or puncturing surface upon blade-to-target impact. Opening force **28** can be applied to blade **30** in any direction that does not intersect with center axis **41** of pivot shaft **40**. Extending tip portion **31** in the direction as shown in FIG. **1** increases the length of a moment arm between center axis **41** and opening force **28**, which results in a lesser force required to overcome the bias force applied to blade **30**, as discussed below in more detail.

FIGS. **1–4**, **21** and **22** show, for reasons of clarity, the blade-opening arrowhead having only one pivotally mounted blade **30**. The blade-opening arrowhead according to this invention will preferably have 2–4 blades **30** each pivotally mounted with respect to blade carrying body **20**. FIG. **4A** shows a cross section of blade carrying body **20** having two closed slots **25** and **27** within each of which is housed one pivotally mounted blade **30**. FIG. **4A** also shows how two stationary blades **70** can be mounted with respect to blade carrying body **20**, between both pivotally mounted blades **30**. It is apparent that one or more stationary blades **70** can be used with at least one pivotally mounted blade **30**.

The desired weight and overall size of the blade-opening arrowhead according to this invention will dictate the number of pivotally mounted blades **30** and stationary blades **70**, if any. When a plurality of blades **30** are used, such blades **30** should preferably be positioned so that they evenly balance the arrowhead. For example, as shown in FIG. **27**, blades **30** are spaced at generally equal circumferential locations. For aerodynamic reasons, it is important to have an arrowhead that is balanced along a centerline axis of blade carrying body **20**.

Pivot shaft **40** preferably has a generally circular cross section. However, it is apparent that pivot shaft **40** can have any other suitable cross section which can be used to pivotally mount blade **30** with respect to blade carrying body **20**. Because of the increased bearing surface area between blade **30** and pivot shaft **40**, which tends to prevent blade wobble, a generally circular cross section is preferred. In one preferred embodiment of pivot shaft **40**, as shown in FIG. **27**, inner segment **42** has a smaller diameter than outer segment **43**. Also as shown in FIG. **27**, inner segment **42** has a smooth bearing surface and is not threaded. However, it is apparent that inner segment **42** of pivot shaft **40** can also be eternally threaded.

Although pivot shaft **40** is preferably mounted within blade carrying body **20** so that no portion of pivot shaft **40** extends beyond skin surface **35** of blade carrying body **20**, it is apparent that at least a portion of pivot shaft **40** could extend beyond skin surface **35** of blade carrying body **20**, for example as shown in FIGS. **18–20**. Pivot shaft **40** can be mounted within blade carrying body **20** so that pivot shaft **40** is either fixed or movable with respect to blade carrying body **20**.

FIGS. **5–8** show a blade-opening arrowhead according to another preferred embodiment of this invention. In the embodiment shown in FIGS. **1–4**, blade carrying body **20** forms at least one closed slot **25**, preferably two closed slots **25** and **27** as shown in FIG. **4A**, which each house one blade **30**. In the embodiment shown in FIGS. **5–8**, two blades **30** are each mounted within open slot **29**, which extends entirely through blade carrying body **20**. Because an island or web **23** of material that remains between closed slot **25** and closed slot **27**, in blade carrying body **20** housing two blades **30**, as shown in FIG. **4A**, the structural strength of blade carrying body **20** can be greater than the structural strength of blade carrying body **20** having open slot **29** extending entirely through blade carrying body **20**, as shown in FIG. **6**.

According to this invention, engagement means are used to maintain blade **30** in a normally closed position, as illustrated in FIGS. **1** and **5**. for example. Bias means are used to provide a bias force that is strong enough to urge the engagement means against blade **30** and maintain blade **30** in a normally closed position, yet weak enough so that the magnitude and direction of the bias force are easily overcome when opening force **28** is applied to blade **30**. Thus, according to this invention, blade **30** can easily pivot or free-wheel from the fully closed position shown in FIGS. **1** and **5** to the fully open position shown in FIGS. **2** and **6**.

According to one preferred embodiment of this invention, the engagement means comprise flexible member **50** deflectably mounted with respect to blade **30**. As used throughout this specification and in the claims, the phrase deflectably mounted is intended to relate to flexible member **50** mounted so that flexible member **50** can deflect in a particular direction. Flexible member **50** preferably acts as a cantilever having one fixed end and an opposite deflectable free end. As shown in FIGS. **4**, **8** and **14**, flexible member **50** is preferably constructed with plate material or foil material which can be shaped to form raised portion **52**. Raised portion **52** may also be known as and referred to as an upset. The engagement means preferably comprise blade **30** having bore or recess **36** within which raised portion **52** mates when blade **30** is in the normally closed position. It is apparent that bore or recess **36** can be a blind bore or a through hole having a shape that corresponds to raised portion **52**. It is apparent that raised portion **52** can have any suitable shape that corresponds and mates with recess **36**.

As clearly shown in FIGS. **3**, **7** and **14**, flexible member **50** is preferably formed as a leaf spring. FIGS. **24** and **25** show another preferred embodiment of the bias means comprising leaf spring **53** having raised portion **52** formed as detent **55**, as clearly shown in FIG. **25**. The bias force within the leaf spring urges raised portion **52** within recess **36**, in the normally closed position of blade **30**. It is apparent that flexible member **50** may be formed from any other suitable material, such as a bent wire or any other suitable spring element known to those skilled in the art.

Flexible member **50** is preferably connected to baseplate **56**, as shown in FIGS. **3**, **7**, **13** and **15**. Baseplate **56** is shown as being constructed of generally flat plate material. However, it is apparent that baseplate **56** can be constructed of any other material or have any other suitable shape which corresponds to the mating shape of blade carrying body **20**, where baseplate **56** is positioned. As shown in FIG. **13**, flexible member **50** acts as a cantilever having one end fixed with respect to baseplate **56** and an opposite free end urged toward blade **30**. As shown in FIGS. **24** and **25**, a cantilevered flexible member **50** is not necessary and can be interchanged with leaf spring **53** having detent **55**.

When flexible member **50** is in a mounted position with respect to blade carrying body **20**, as shown in FIG. **3**, side edge **57** of baseplate **56**, shown in FIGS. **13** and **15**, abuts

sidewall **22** of blade carrying body **20**. As shown in FIG. **13**, according to one preferred embodiment of this invention, side edge **57** has a convex arcuate shape which corresponds to the concave arcuate shape of sidewall **22**. Thus, when pivot shaft **40** is mounted within through hole **58** of baseplate **56**, the forward portion of side edge **57** abuts the forward portion of sidewall **22** to prevent counterclockwise movement, relative to the orientation shown in FIG. **1**, of baseplate **56** with respect to blade carrying body **20**, as blade **30** moves toward and into the normally closed position. Likewise, the rearward portion of side edge **57** abuts the rearward portion of sidewall **22**, in order to prevent clockwise rotation of baseplate **56** with respect to blade carrying body **20**, as blade **30** moves toward the fully open position, as shown in FIG. **2**.

Although not necessary, it is preferred that baseplate **56** remains in a relatively fixed position with respect to blade carrying body **20**. As shown in the mounted positions of FIGS. **3** and **7**, baseplate **56** will actually move with respect to blade carrying body **20**, to the extent of the tolerances between such components. It is apparent that baseplate **56** can be fixedly secured with respect to blade carrying body **20** by using, adhesives, welding, techniques, or any other suitable securement means known to those skilled in the art. It is even possible to extend and bend base plate **56** so that an edge portion of baseplate **56** extends beyond closed slot **25** or open slot **29** and over skin surface **35** of blade carrying body **20**. Maintaining the relative position of baseplate **56** results in maintaining the relative position of flexible member **50** so that raised portion **52** can properly align with and mate within recess **36**.

It is apparent that the roles between flexible member **50** or detent **55** and recess or bore **36** can be reversed so that flexible member **50** or detent **55**, for example, is integral with, connected to or otherwise attached to blade **30**), and recess or bore **36** is formed within blade carrying body **20** or an equivalent element. FIG. **9** illustrates one preferred embodiment of this invention wherein such role reversal is accomplished by flexible member **50** formed as an integral part of blade **30** and recess **36** formed within blade carrying body **20**.

FIG. **10** shows another preferred embodiment according to this invention, wherein the engagement means comprise plunger shaft **60** slidably mounted within a bore within blade carrying body **20**. In such embodiment, the bias means preferably comprise spring **62** mounted with respect to blade carrying body **20** so that in the closed position of blade **30**, spring **62** urges plunger shaft **60** into a mated position within notch **34** of blade **30**, as shown in FIG. **10**. Plunger shaft **60** preferably has arcuate tip **61** which mates within notch **34**, so that as opening force **28** is applied to blade **30**, movement of blade **30** overcomes the bias force and forces plunger shaft **60** out of notch **34**, thus allowing blade **30** to rotate clockwise, as shown in FIG. **10**, toward the fully open position.

As shown in FIG. **11**, when blade **30** is in the fully open position, plunger shaft **60** is fully extended toward blade **30** and seats within a corresponding notch **33**. As shown by hidden lines in FIGS. **10** and **11**, spring **62** is preferably a coil spring which is preferably mounted within housing **63**.

In another preferred embodiment according to this invention, the engagement means comprise bearing member **65** slidably mounted within blade carrying body **20**, as shown in FIG. **12**. Bias means, such as spring **68**, are used to urge bearing surface **67** within notch **34** of blade **30**. Blade **30** is not shown in FIG. **12** but is preferably similar to blade **30** shown in FIG. **1**, for example.

Stop means are used to prevent pivotal movement of blade **30** from proceeding further than the fully open position, for example as shown in FIGS. **2** and **6**. In one preferred embodiment according to this invention, the stop means comprise blade **30** having blunt edge **38**, which is generally opposite sharp edge **37**, as shown in FIG. **2**. FIG. **2** shows blunt edge **38** abutting blade carrying body **20** at sidewall **22**. Blade **30** preferably makes surface contact with blade carrying body **20**, so that impact forces are transferred between blade **30** directly through blade carrying body **20** and into an arrow shaft to which the blade-opening arrowhead of this invention is attached. It is desirable to minimize the forces transferred through pivot shaft **40** in order to prevent unnecessary wear between blade **30** and pivot shaft **40**.

In one preferred embodiment according to this invention, sharp edge **37** abuts blade carrying body **20**, as shown in FIGS. **1** and **5**, when blade **30** is in the closed position. However, it is apparent that flexible member **50** and notch **34** can be designed so that sharp edge **37** does not contact blade carrying body **20** when blade **30** is in the normally closed position.

According to one preferred embodiment of this invention, blade carrying body **20** has two closed slots **25** and **27**, as shown in FIG. **4**A. Closed slot **25** and closed slot **27** are preferably offset with respect to each other, so that an island or web **23** of material, for example the same material which forms blade carrying body **20**, is positioned between closed slot **25** and closed slot **27**. Such arrangement of blade carrying body **20** results in a structural member that provides significantly, increased strength over blade carrying body **20** having open slot **29** passing completely through the member.

As shown in FIGS. **15–17**, rib **54** is an integral part of but can also be connected to or otherwise attached to baseplate **56** of flexible member **50**. Rib **54** provides a bearing surface over which blade **30** slides when moving between the open and closed positions. Rib **54** can be used to eliminate blade wobble by tightening any gap established between baseplate **56** and blade **30**.

FIGS. **18–20** show another preferred embodiment according to this invention wherein two blades **30** are each pivotally mounted with respect to blade carrying body **20**, so that blade **30** is positioned entirely external with respect to blade carrying body **20**. In such preferred embodiment, pivot shaft **40** comprises a screw which is threadedly engaged within an internally threaded bore within blade carrying body **20**. However, it is apparent that other mechanical elements can be used to accomplish the same result of providing a shaft about which an externally mounted blade **30** can pivot, including but not limited to pivot shaft **40** as shown in FIG. **27**. As shown in FIG. **19**, blade **30** comprises recess **36** and flexible member **50** is either integral with or mounted to blade carrying body **20**. It is apparent that the roles between recess **36** and flexible member **50** can be reversed so that blade **30** comprises flexible member **50** and so that blade carrying body **20** has recess **36**. Blade **30** is preferably positioned adjacent mounting area **24** which is preferably formed by machining or otherwise forming a flattened surface upon blade carrying body **20**. Mounting area **24** is preferably generally parallel to a longitudinal axis of the arrowhead, so that blades **30** remain generally parallel to such longitudinal axis and thus prevent undesirable steering of the arrowhead.

The bias means according to this invention are intended to comprise leaf springs, coil springs and/or any other suitable member that has a return force or a bias force. For example,

the bias means may even comprise a material that returns to its initial shape after being bent, compressed or otherwise deformed. As another example of bias means, two blades **30** can be pivotally mounted so that both blades **30** come relatively close to each other at some point throughout pivotal movement. One of such blades **30** can have raised portion **52** and the other blade **30** can have notch **34**, resulting in engagement means to hold both blades **30** in a closed position with respect to blade carrying body **20**. In such preferred embodiment, the bias means can comprise a cantilever portion of one blade **30** acting as a spring element when forced against the other blade **30**.

As clearly shown in FIGS. **1**, **2**, **21** and **22**, for example, in the closed position of blade **30** with respect to blade carrying body **20**, tip portion **31** extends radially outward beyond outer or skin surface **35** of blade carrying body **20**. Tip portion **31** of blade **30** is preferably rounded. As used throughout the specification and in the claims, the word rounded is intended to relate to tip portion **31** having no sharp points. The purpose of the rounded tip portion is to provide a bearing surface which can contact and slide with respect to a target surface, rather than puncture or cut the target surface. Such rounded tip portion **31** can result in better blade-opening performance upon blade-to-target impact.

As shown in FIG. **33**, rounded tip portion **31** presents a compound radius curve **81** to the target. Compound radius curve **81** has first curved radius portion **82** and second curved radius portion **83**. First curved radius portion **82** and second curved radius portion **83** are convexly curved toward or to the target surface when blade **30** is in the flight position, i.e., contained within blade carrying body **20**. Second curved radius portion **83**, as shown, has a relatively greater radius than first curved radius portion **82**. First curved radius portion **82** incorporates blunt edge **38** as does second curved radius portion **83**. Second curved radius portion **83** transitions between the sharp edge **37** and first curved radius portion **82**. A line tangential to second curved radius portion **83** forms acute angle **85** with respect to longitudinal axis **86** of blade **30** on a side of a tangent distal from blade **30**.

As previously noted, the forwardmost or tip portion **31** of blade **30** presents to the target a blunt bearing surface formed from blunt edge **38**. It will be understood by the person having ordinary skill in the art that rounded tip portion **31** of blade **30** is thereby constructed and arranged to provide a bearing surface without cutting or puncturing edges or angles owing to blunt edge **38** having an upswept convex form at its forepart to ensure a good transfer of opening force **28** to blade **30** when striking the target.

As shown by the phantom lines in FIG. **24**, through hole **58** can actually be a cutout section rather than a circular hole. The cutout section can provide the same result of pivot shaft **40** retaining leaf spring **53** in a mounted position with respect to blade carrying body **20**, such as by providing interference.

FIGS. **26–29** show blade carrying body **20** according to another preferred embodiment of this invention. Such blade carrying body **20** has three blades **30**, not shown in the drawings. FIGS. **26**, **28** and **29** show blade carrying body **20** having scallops **21** which comprise cross sections of blade carrying body **20** having a shorter cord length of outer surface **35** between adjacent closed slots **25** than an arc segment having a radius equal to a distance from a longitudinal centerline of blade carrying body **20** to a juncture between outer surface **35** and slot **25**. Scallop **21** results in blade carrying body **20** having reduced surface area of outer surface **35**, which results in reduced friction upon blade carrying body **20** as blade carrying body **20** penetrates into a target. As shown in FIGS. **26** and **29**, blade carrying body **20** has one scallop **21** forward and another scallop **21** rearward of pivot shaft **40**. However, it is apparent that scallop **21** may be only forward or only rearward with respect to pivot shaft **40**.

The blade-opening arrowhead according to different embodiments of this invention has several operational and performance advantages over conventional blade-opening arrowheads. For example, the engagement means according to this invention result in a snap locking blade retention system wherein the user senses a positive snap action resulting from the bias means urging the engagement means against blade **30**, such as when moving blade **30** into the fully closed position. The bias means and engagement means according to this invention can be properly designed so that blade **30** releases from the fully closed position, in an opening direction, immediately and responsively when a sufficient opening force **28** is applied to blade **30**. Because the bias means and engagement means of this invention maintain blade **30** in the closed position, once the bias force is overcome and blade **30** moves in the opening direction, blade **30** need not overcome closing forces, such as those applied by conventional O-rings, wraps or other annular bands. Once blade **30** according to this invention moves from the closed position, blade **30** free-wheels into the fully open position, thereby exposing sharp edges **37**. Because of the increased bearing surface contact between blade **30** and blade carrying body **20** according to this invention, forces are transferred through each blade **30**, blade carrying body **20** and the arrow shaft, as if such three elements were an integral unit.

It is apparent that the components of the blade-opening arrowhead according to this invention can be constructed of relatively high-strength materials, such as lightweight metals, graphite, graphite composites and other suitable materials known to those skilled in the art. Although certain components shown in the drawings may be identified as metal, plastic or composite, it is apparent that various materials can be interchanged without departing from the desired results of a blade-opening arrowhead according to this invention. It is also apparent that the different bias means, engagement means and pivot means can be interchanged throughout the above-discussed and other preferred embodiments according to this invention, without departing from the desired results.

FIGS. **30** and **31** show another preferred embodiment of this invention comprising blade **80**, which is preferably mounted in a fixed position with respect to blade carrying body **20**. As used throughout this specification and in the claims, the word fixed is intended to relate to blade **80** remaining in a mounted position, not a pivotal position such as blade **30** as previously described, with respect to blade carrying body **20**; it is apparent that when mounted in a fixed position with respect to blade carrying body **20**, blade **80** may move slightly with respect to blade carrying body **20**, due to manufacturing tolerances of blade carrying body **20**, blade **80** and/or pin **88**.

FIG. **32** shows blade **80** mounted within closed slot **27** of blade carrying body **20**. It is apparent that blade **80** can be mounted within open slot **29** or any other shape of a slot within blade carrying body **20** that accommodates the overall shape of blade **80**. As shown in FIGS. **30** and **32**, blade **80** comprises leading edge **81**. As shown in FIG. **31**, leading edge **81** is blunt and such blade **80** can be used as a target or practice blade. It is possible to replace previously

described pivotal blade **30** with fixed blade **80**, so that the arrowhead of this invention can be used for target practice. The particular dimensions and weight of blade **80** can be designed to provide the arrowhead of this invention with flight characteristics, when using one or more and preferably 2–4 fixed blades **80**, that are similar to flight characteristics of the arrowhead of this invention having pivotal blades **30** in the closed position such as shown in FIG. **1**.

In another preferred embodiment of this invention, leading edge **81** of blade **80** has a sharp edge. For example, it is possible to alter the shape of blade **80** to accommodate a sharp leading edge **81** that operates to cut into a target or other object in a manner similar to that of many conventional sharpened blades of conventional arrowheads. The mounting features of blade **80** as described in this specification and in the claims can be used in other conventional arrowheads to fixedly mount one or more blades with respect to the conventional ferrule or blade carrying body.

As shown in FIG. **32**, a portion of blade **80** is mounted within a slot, such as but not limited to closed slot **27**. When in a mounted position as shown in FIG. **32**, a portion of blade **80** extends beyond surface **35**. The amount of blade **80** that extends beyond surface **35** can be varied depending upon the particular use of blade **80**. For example, in the preferred embodiment wherein leading edge **81** is sharp, it may be desirable to extend a larger portion of blade **80** beyond surface **35**.

In one preferred embodiment according to this invention, sidewall **22** of blade carrying body **20** at least partially defines the slot in which blade **80** is positioned. As shown in FIG. **32**, sidewall **22** comprises relatively straight portion **89** and arcuate portion **90**. As shown in FIG. **30**, blade **80** comprises bearing surfaces **83** positioned at a distance from each other. In one preferred embodiment of this invention, as shown in FIG. **32**, blade **80** is positioned so that bearing surfaces **83** either abut or are adjacent sidewall **22**. As shown in FIG. **32**, one bearing surface **83** abuts or is adjacent straight portion **89** and the opposite bearing surface **83** abuts or is adjacent arcuate section **90**. Such arrangement leaves a gap between mounted blade **80** and sidewall **22**, as shown in FIG. **32**. In a preferred embodiment where blade **80** comprises bearing surfaces **83** as shown in FIG. **30**, for example, blade **80** has less rocking motion with respect to blade carrying body **22** when in a mounted position. Also with such preferred embodiment, it is not necessary to precisely match the curve of arcuate segment **82** to the curve of arcuate portion **90**. In one preferred embodiment wherein blade **80** comprises bearing surfaces **83**, blade **80** may comprise a straight portion or another irregularly shaped portion in lieu of the general shape of arcuate segment **82** as shown in FIG. **32**.

As shown in FIG. **32**, pin **88** is mounted within through hole **86** of blade **80**. Pin **86** retains blade **80** in a mounted position with respect to blade carrying body **22**. As shown in FIG. **32**, pin **88** interferes with blade **80** so that blade **80** cannot move out of the slot, except for movement due to manufacturing tolerances associated with the elements. In one preferred embodiment of this invention as shown in FIG. **32**, pin **88** has a generally circular cross section. However, it is apparent that pin **88**, like pivot shaft **40**, can have any other suitable cross-sectional shape. Pin **88** can even be formed as an integral part of blade carrying body **22**. Similar to through hole **58** of baseplate **56** as previously discussed, a cutout section of blade **80** can be used in lieu of through hole **86** of blade **80** to accomplish the same result of pin **88** interfering with blade **80** to retain blade **80** in a mounted position with respect to blade carrying body **22**.

While in the foregoing specification this invention has been described in relation to certain preferred embodiments thereof, and many details have been set forth for purpose of illustration it will be apparent to those skilled in the art that the invention is susceptible to additional embodiments and that certain of the details described herein can be varied considerably without departing from the basic principles of the invention.

What is claimed is:

1. A pivoting blade for an arrowhead, the pivoting blade comprising:

a body having a sharp surface and a blunt surface;

a leading tip portion transitioning between the sharp surface and the blunt surface; and

the leading tip presenting a blunt surface convexly curved to the target surface when the pivoting blade is in a closed position.

2. The pivoting-blade arrowhead of claim **1**, wherein the blunt surface follows a compound curve having a first radius and a second radius.

3. The pivoting blade of claim **2**, wherein the blunt surface incorporates the first radius and the second radius, and the second radius transitions between the sharp edge and the first radius.

4. The pivoting blade of claim **2**, wherein the first radius is less than the second radius.

5. The pivoting blade of claim **2**, wherein a line tangential to the second radius of the blunt surface forms an acute angle with respect to a longitudinal axis of the pivoting blade on a side of a tangent distal from the pivoting blade.

6. An arrowhead with a pivoting blade carried within a slot of a blade carrying body of the arrowhead, comprising:

a portion of the blade pivotally mounted within the slot and having a normally closed flight position and an open position upon impact with a target;

the blade having a sharp edge facing the blade carrying body and a blunt edge facing away from the blade carrying body in the flight position;

a forwardmost portion of the blade in the flight position transitioning between the sharp edge and the blunt edge; and

the forwardmost portion presenting a continuation of the blunt edge convexly curved to the target surface when the blade is in a flight position.

7. The arrowhead of claim **6**, wherein the blunt edge continuation is convexly curved in a compound curve having a first curved radius portion and a second curved radius portion.

8. The arrowhead of claim **7**, wherein:

the first curved radius portion transitions between the blunt edge and the second curved radius portion; and

the second curved radius portion transitions between the sharp edge and the first curved radius portion.

9. The arrowhead of claim **7**, wherein the first radius is less than the second curved radius portion.

10. The arrowhead of claim **7**, wherein a line tangential to the second curved radius portion forms an acute angle to a longitudinal axis of the blade on a side of a tangent distal from the blade.

11. An arrowhead having a blade carrying body and a pivotable blade therein for changing positions between a closed in-flight position and an open position upon impact with a target, comprising:

a blade having a through hole;

engagement means for maintaining said blade in a closed position;

bias means for urging said engagement means against said blade and for allowing said blade to pivot from said closed position upon an opening force applied to said blade, said bias means comprising a base plate;

a pivot shaft mounted with respect to the blade carrying body, said pivot shaft mounted within said through hole;

said pivot shaft passing through said base plate and a side edge of said base plate engaging a side wall of the blade carrying body to maintain said base plate in a mounted position with respect to the blade carrying body; and

said blade having a sharp edge and a blunt edge and a forwardmost portion incorporating the blunt edge, the forwardmost portion being a rounded tip portion which is blunt and convexly curved to a target surface when the blade is in the closed position.

12. The blade for a pivoting-blade arrowhead of claim **11**, wherein the convexly curved portion presents a compound curve having a first curved radius portion and a second curved radius portion.

13. The blade for a pivoting-blade arrowhead of claim **12**, wherein the first radius portion transitions between the blunt edge and the second radius portion, and the second radius portion transitions between the sharp edge and the first radius portion.

14. The blade for a pivoting-blade arrowhead of claim **12**, wherein the radius of the first radius portion is smaller than the radius of second radius portion.

15. The blade for a pivoting-blade arrowhead of claim **12**, wherein a line tangential to the second radius portion curve forms an acute angle to a longitudinal axis of the blade on a side of a tangent distal from the blade.

* * * * *