UNITED STATES PATENT AND TRADEMARK OFFICE

BEFORE THE PATENT TRIAL AND APPEAL BOARD

BOWMAR ARCHERY LLC,
Petitioner,

v.

MATTHEW FUTTERE,
Patent Owner.

IPR2024-00401
Patent 8,043,177 B2

PETITIONER'S REPLY TO PATENT OWNER'S RESPONSE TO PETITION FOR *INTER PARTES* REVIEW

TABLE OF CONTENTS

Page

EXHIBIT LIST iii

I. INTRODUCTION 1

II. LIECHTY ANTICIPATES THE CLAIMS 2

A. Claim 1 3

1. [1.A] "a ferrule . . . therebetween" 3

2. [1.B] "a first blade . . . second end" 4

3. [1.C] "the first blade member having a retracted position . . . an extended position . . . distance" 5

4. [1.D] "a second blade member . . .second end" 11

5. [1.E] "the [second] blade member having a retracted position . . . an extended position . . . distance" 11

6. [1.F] "at least one biasing member . . . extended position." 12

B. Claim 11 13

1. [11.A] "a ferrule . . . ferrule body" 13

2. [11.B] "a first blade member . . . rearward end" 13

3. [11.C] "the first blade member . . . greater than the first distance" 14

4. [11.D] "the pivotal interconnection . . . ferrule body" 15

5. [11.E] "a second blade member . . . rearward end" 15

6. [11.F] "the second blade member . . . greater than the first distance" 15

7. [11.G] "the pivotal interconnection . . . ferrule body" 16

8. [11.H] "at least one biasing member . . . extended positions" 16

III. VANDEWATER ANTICIPATES THE CLAIMS 16

A. Claim 11 16

1. [11.A] "a ferrule . . . ferrule body" 16

2. [11.B] "a first blade member . . . rearward end" 17

3. [11.C] "the first blade member . . . first distance" 19
4. [11.D] "the pivotal interconnection . . . ferrule body" 22
5. [11.E] "a second blade member . . . rearward end" 22
6. [11.F] "the second blade member . . . first distance" 22
7. [11.G] "the pivotal interconnection . . . ferrule body" 24
8. [11.H] "at least one biasing member . . . extended positions" 24

IV. LINT ANTICIPATES THE CLAIMS 26
A. The meaning of the term "blade" 26
B. The term "blade" and "barb" are often used interchangeably in the archery industry 29
C. Lint discloses "blades" 31
D. Lint discloses "the biasing member being the only element operable to hold the blade members in the extended position" 32

V. LINT ALONE OR IN COMBINATION WITH MINISINI AND/OR KREIGER RENDERS THE CLAIMS OBVIOUS 33
A. Adding sharp edges to barbs/blades is a known and common practice 34
B. The Lint broadhead is not limited to fishing 35

VI. HENDRICKS ALONE OR IN COMBINATION WITH THE KNOWLEDGE OF A POSITA RENDERS THE CLAIMS OBVIOUS 36

VII. CONCLUSION 36

CERTIFICATION UNDER 37 CFR § 42.24(d) 38

CERTIFICATE OF SERVICE 39

EXHIBIT LIST

Exhibit	Description
1022	Figures of Liechty broadhead
1023	Figures of Liechty broadhead
1024	Figures of Liechty broadhead
1025	Figures of Liechty broadhead
1026	Figures of Vandewater broadhead
1027	U.S. Patent No. 5,570,530
1028	U.S. Patent No. 4,819,360
1029	U.S. Patent No. 7,485,056
1030	U.S. Patent Application Publication No. 2023/0366662
1031	Muzzy Arrowhead/Bowfishing Broadheads/Ancient Broadheads
1032	U.S. Patent No. 2,373,216
1033	U.S. Patent No. 7,311,622
1034	Transcript of 11/19/2024 Deposition of Wayne Willkomm
1035	Video of Liechty broadhead
1036	Video of Vandewater broadhead
1037	Video of Lint broadhead
1038	U.S. Patent No. 6,174,252
1039	U.S. Patent No. 4,405,133
1040	Transcript of 09/06/2024 Deposition of Todd Kuhn
1041	Matthew Futterre video
1042	U.S. Patent No. 2,909,372
1043	U.S. Patent No. 7,314,419
1044	U.S. Patent No. 2,373,216
1045	U.S. Patent No. 2,816,766
1046	Reply Declaration of Dr. Todd Kuhn
1047	Declaration of Robert Mizek
1048	U.S. Patent No. 3,022,077
1049	Arrowheads – Characteristics and different uses
1050	Bowsite.com public forum

CLAIMS 1 AND 11

CLAIM 1

1. A broadhead for an arrow having a shaft, the broadhead comprising:

[1.A.] a ferrule having a rearward end configured for attachment to the shaft and an opposite forward end with a ferrule body extending therebetween;

[1.B] a first blade member having a first end pivotally interconnected with the ferrule body and an opposite second end,

[1.C] the first blade member having a retracted position wherein the second end is spaced from the ferrule body at a first distance and an extended position wherein the second end is spaced from the ferrule body by a distance which is greater than the first distance;

[1.D] a second blade member having a first end pivotally interconnected with the ferrule body and an opposite second end,

[1.E] the [second][1] blade member having a retracted position wherein the second end is spaced from the ferrule body at a first distance and an extended position wherein the second end is spaced from the ferrule body by a distance which is greater than the first distance; and

[1.F] at least one biasing member biasing the first and second blade members towards the extended positions,

[1.G] the biasing member being the only element operable to hold the blade members in the extended position.

[1] This is a typographical error in the patent. "First" should be replaced with "second."

CLAIM 11

11. A broadhead for an arrow having a shaft, the broadhead comprising:

[11.A] a ferrule having a rearward end configured for attachment to the shaft and an opposite forward end with a ferrule body extending therebetween, the forward end of the ferrule defining the forward tip of the arrow and being fixed with respect to the ferrule body;

[11.B] a first blade member having a forward end pivotally interconnected with the ferrule body and an opposite rearward end,

[11.C] the first blade member having a retracted position wherein the rearward end is spaced from the ferrule body at a first distance and an extended position wherein the rearward end is spaced from the ferrule body by a distance which is greater than the first distance,

[11.D] the pivotal interconnection between the first blade member and the ferrule body being at a fixed position relative to the ferrule body;

[11.E] a second blade member having a forward end pivotally interconnected with the ferrule body and an opposite rearward end,

[11.F] the second blade member having a retracted position wherein the rearward end is spaced from the ferrule body at a first distance and an extended position wherein the rearward end is spaced from the ferrule body by a distance which is greater than the first distance,

[11.G] the pivotal interconnection between the second blade member and the ferrule body being at a fixed position relative to the ferrule body; and

[11.H] at least one biasing member biasing the first and second blade members towards the extended positions.

I. INTRODUCTION

A prior art reference that sometimes, but not always, embodies a claim nonetheless anticipates that claim. *E.g., Power Integrations, Inc. v. Fairchild Semiconductor Int'l, Inc.*, 843 F.3d. 1315, 1336-37 (Fed. Cir. 2016) (finding claim anticipated where prior art met all the features sometimes during operation). Here, the Liechty broadhead meets all the limitations of the claims when the blades move forward from the position shown in Figure 5 of Liechty. Patent Owner's expert, Mr. Willkomm, admitted during his deposition that the Liechty broadhead embodies all the limitations of independent claims 1 and 11. For easy reference, Dr. Kuhn's Reply Declaration contains claim charts mapping claims 1 and 11 to Mr. Willkomm's testimony. Ex.1046, ¶37,63.[2] The Patent Owner does not dispute that Liechty

[2] Patent Owner contends that Dr. Kuhn's "opinions should be ignored" on the basis that "he has more experience" than a POSITA and that "he used that experience drafting his declaration and coming to the conclusions reached in it." Patent Owner's contention should be rejected. Dr. Kuhn applied the definition of a POSITA when rendering his opinion (Ex. 1019, ¶20-23; Ex. 1046, ¶2), and the Federal Circuit has rejected this argument in other proceedings. *E.g.*, *Norgren Inc. v. International Trade Comm'n*, 699 F.3d 1317, 1325 (Fed. Cir. 2012).

discloses the additional limitations of the dependent claims. All challenged claims are therefore invalid.

Vandewater also discloses all limitations of the claims. Mr. Willkomm's deposition testimony confirms that Vandewater discloses all the limitations of independent claim 11. The Patent Owner does not dispute that Vandewater discloses the additional limitations of the dependent claims. All challenged claims are therefore invalid.

Likewise, Lint discloses all limitations of the claims. Patent Owner contends that Lint does not disclose "blade members" or that "the biasing member being the only element operable to hold the blade members in the extended position." Mr. Willkomm's deposition testimony, however, contradicts those contentions and demonstrates that they have no merit. Lint anticipates and/or renders the claims obvious either alone or in combination with other prior art.

II. LIECHTY ANTICIPATES THE CLAIMS

Relevant to the analysis below, Exhibit 1023 accurately depicts the blades being pushed forward by the force of the spring during use of the Liechty broadhead. Ex.1046, ¶11. Mr. Willkomm agrees. Ex.1034, 33:22-34:22, 35:7-13. Exhibit 1035 is a video animating the figures from Exhibit 1023 showing how the blades move during use. Ex.1046, ¶12-13. An annotated version of Exhibit 1023 is shown on the following page.

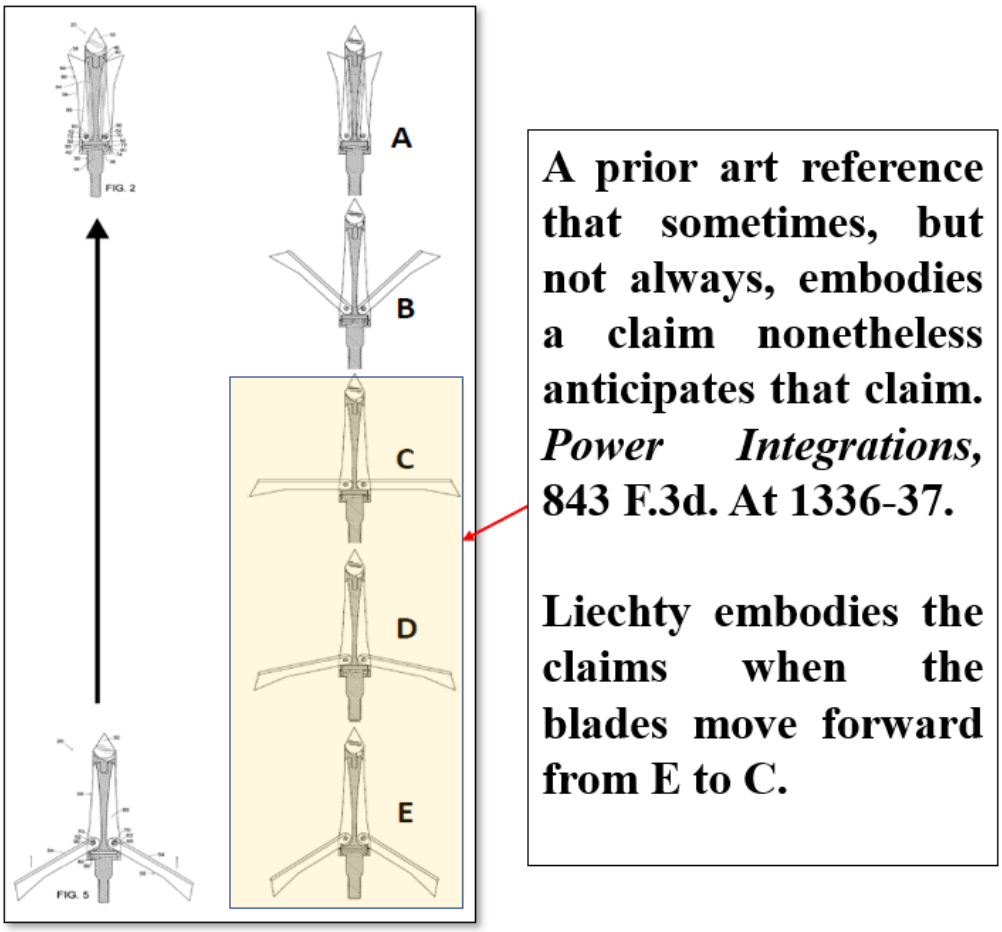

A. Claim 1

1. [1.A] "a ferrule . . . therebetween"

Liechty discloses the limitations of **[1.A]**. Ex.1019, ¶191; Ex.1046, ¶16. Mr. Willkomm agrees. Ex.1034, 20:18-21, 21:8-18. An annotated version of Fig. 5 taken from Dr. Kuhn's Reply Declaration is shown below.

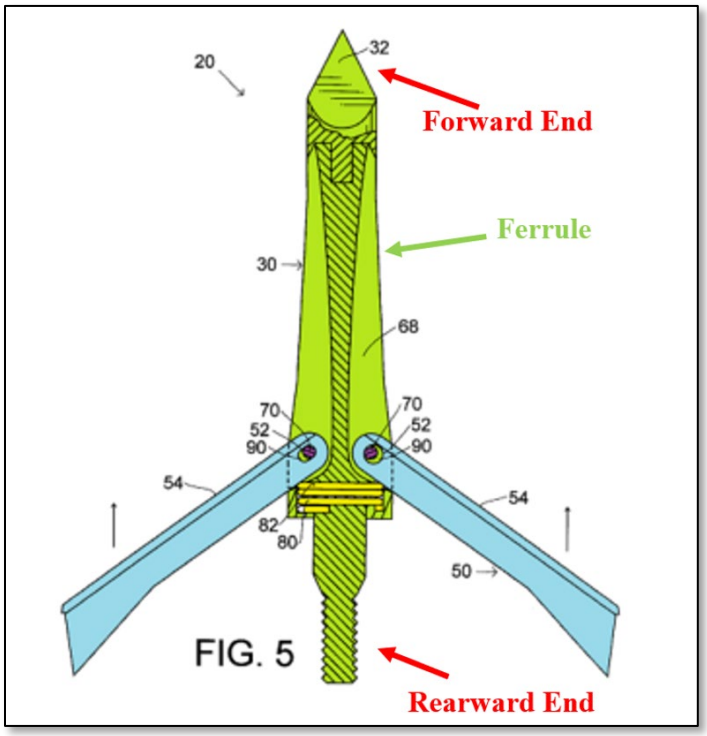

2. [1.B] "a first blade . . . second end"

Liechty discloses the limitations of **[1.B]**. Ex.1019, ¶192; Ex.1046, ¶17-18. Mr. Willkomm agrees, testifying that Liechty discloses:

- "two blade members" and "each of the blade members of the Liechty broadhead has two ends." Ex.1034, 22:16-21.
- "the first end of each blade is pivotally connected to the ferrule body." 22:19-23:5.
- "the blades have a second end" that is "able to freely rotate which is not connected to the ferrule body" and "is spaced a distance away from the ferrule body." 23:8-13.

An annotated version of Fig. 5 of Liechty taken from Dr. Kuhn's Reply Declaration is shown below.

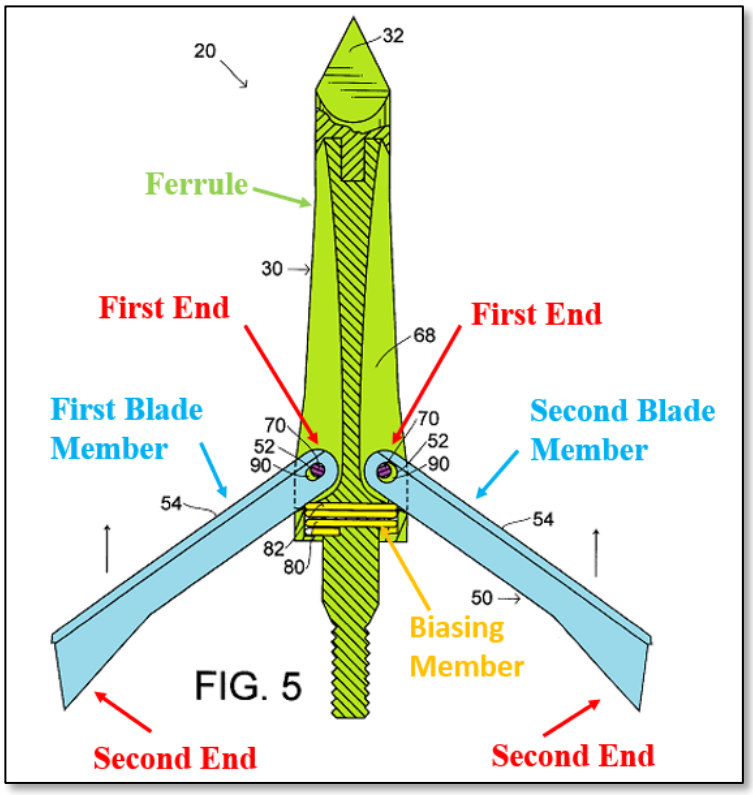

3. [1.C] "the first blade member having a retracted position . . . an extended position . . . distance"

Claim 1 requires "the first blade member having a retracted position" and an "extended position." "Claim 1 defines 'retracted position' as 'a first distance between the ferrule body and the second end of the blade member." Ex.1034, 75:8-11; Ex.1001, 5:27-29. "Claim 1 defines 'extended position' as the second end being spaced from the ferrule body by a distance which is greater than the first distance." Ex.1034, 75:18-21; Ex.1001, 5:29-31. The specification uses the same language to

define the "retracted position"[3] and "extended position." Ex.1001, 1:40-45; Ex.1034, 75:23-76:1. Nothing in the claim language dictates: (1) when the first blade must be in the "retracted position" or "extended position;" or (2) when the first blade must move from an "retracted position" to an "extended position" or vice versa. Ex.1046, ¶19-20. Mr. Willkomm agrees. Ex.1034, 81:1-17.

Liechty discloses the "first blade" having a "retracted position" and an "extended position," as required by **[1.C]**. Ex.1019, ¶193; Ex.1046, ¶21-25. During use, the blades move forward as shown in Exhibit 1023 when the broadhead: (1) moves through an animal; (2) stops in an animal; or (3) exits an animal. Ex.1046, ¶22. Mr. Willkomm agrees. Ex.1034, 36:1-38:14.

When the blades move forward, the first blade moves from a "retracted position" (i.e., a first distance between the ferrule body and the second end of the blade member) to an "extended position" (i.e., the second end is spaced from the

[3] "Retract" means "to draw or pull back." https://www.merriam-webster.com/dictionary/retract. "Extend" means "to stretch out in distance." https://www.merriam-webster.com/dictionary/extend.

ferrule body by a distance which is greater than the first distance). Ex.1046, ¶21, 23-25. Exhibit 1023 is reproduced at right.

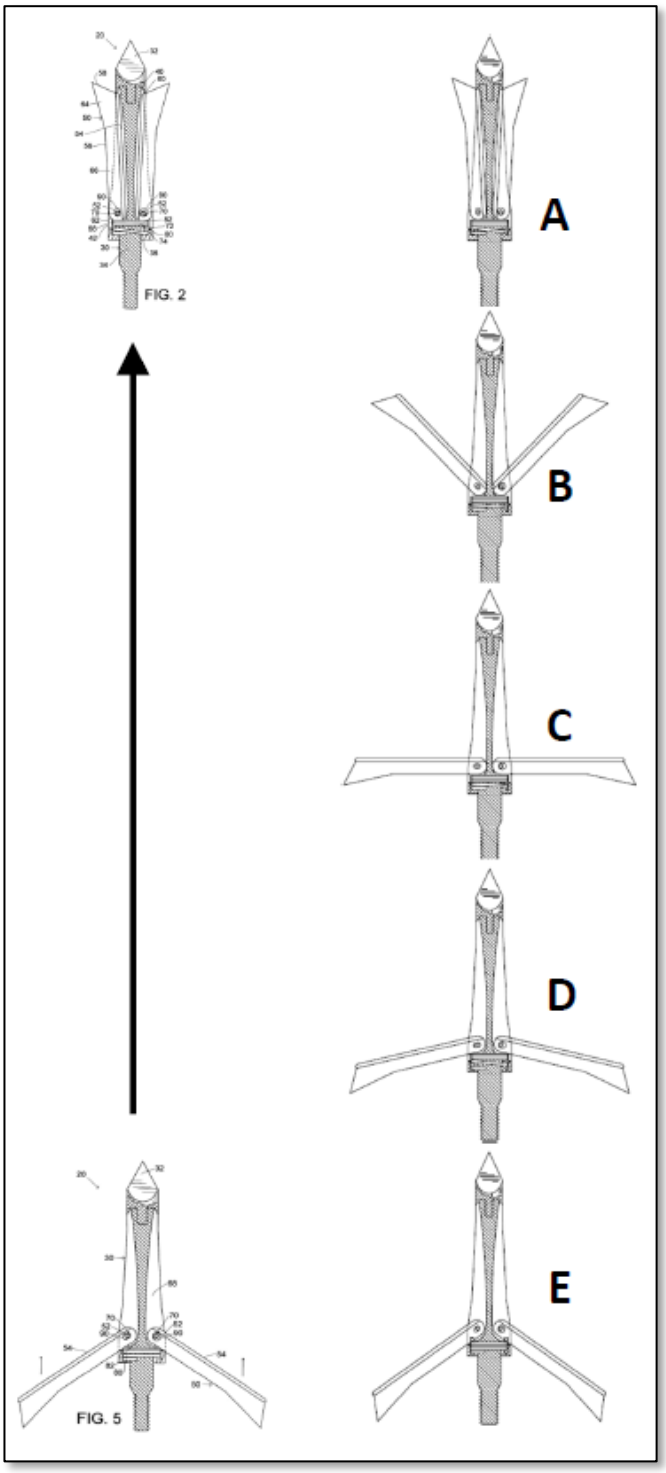

Exhibit 1024 depicts the distances between the ends of the blades and the ferrule body as the blades move forward from a "retracted position" to an "extended position." Ex.1046, ¶21, 23-24. As the blades move forward, the distance between the second end of each blade and the ferrule body gets larger. *Id*. Mr. Willkomm agrees. Referring to Exhibit 1024, Mr. Willkomm testified:

- when the Liechty broadhead is the position shown in Figure E, there is a "first distance" which is "a distance between the end of the blades and the ferrule body." Ex.1034, 38:16-39:5; 39:13-18.
- as the blades of the Liechty broadhead move forward, they arrive at "second distance" "between the end of the blades and the ferrule body in Figure D." 39:19-40:5.
- "The second distance is greater than the first distance." 40:1-12.

Dr. Kuhn juxtaposed the figures from Exhibit 1024 with Mr. Willkomm's testimony. Ex.1046, ¶21 (excerpt shown on the following page).

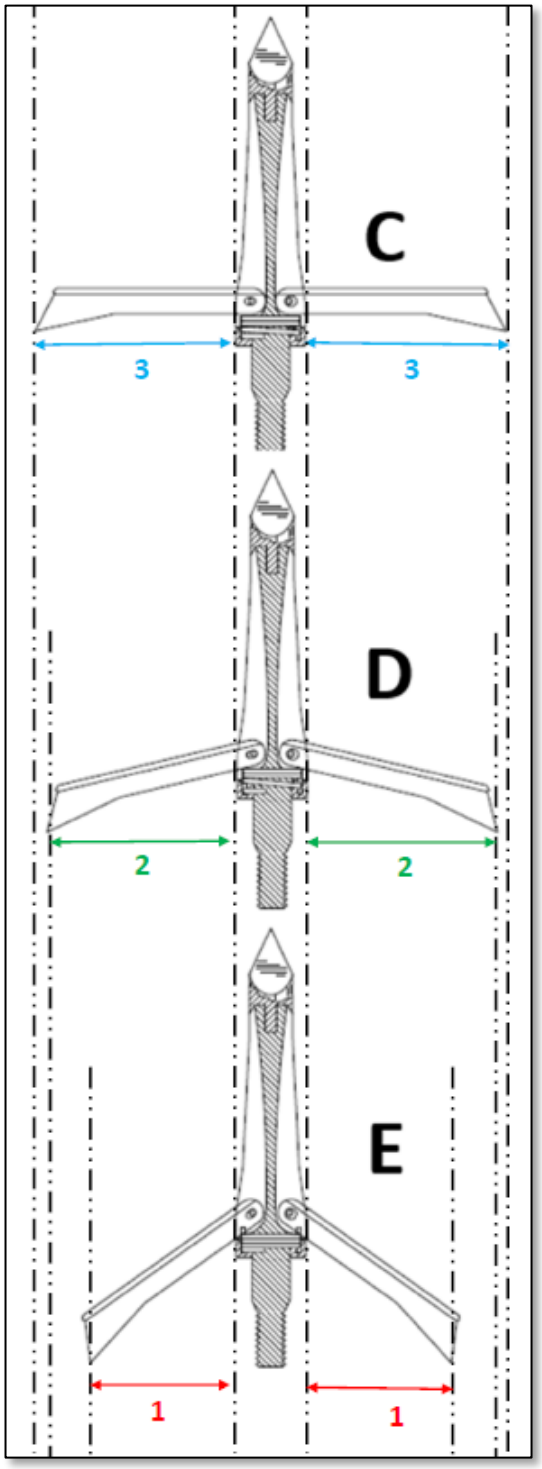

Referring to Ex. 1024, Mr. Willkomm testified:

"Figure D, there's a distance between the end of the blades and the ferrule body in Figure D. We have a green double arrow showing that distance. We labeled that with a number 2, a second distance. Do you see that?

A. Yes.

Q. Okay. So my question is, the second distance, which is in green in Figure D, is greater than the first distance, which is red in Figure E; correct?

A. That is correct.

*** * ***

Q. So now look at Figure C. In Figure C there's a distance between the end of the blades and the ferrule body. We have a blue double arrow showing that distance. We've labeled that with a number 3, a third distance. Do you see that?

A. Yes.

Q. And a third distance, which is in blue in Figure C, is greater than the second distance, which is in green in Figure D; correct?

A. Appears to be slightly greater, yes.

Q. So when comparing Figure C and D, the third distance, which is in blue, is greater than the second distance, which is in green; correct?

A. Yes.

Q. So the third distance is greater than the second distance.

A. Yes.

Q. So the distance in Figure C is greater than the distance in Figure E.

A. Appears to be slightly so."

Ex.1034, 39:13-41:7.

The blades in all of the embodiments in the '177 patent do the exact same thing – i.e., as the blades move forward from the force of the annular spring, the distance between the second end of each blade and the ferrule body gets larger. Ex.1046, ¶25 (excerpt reproduced below).

"an extended position" – i.e., the second end being spaced from the ferrule body by a distance which is greater than the first distance

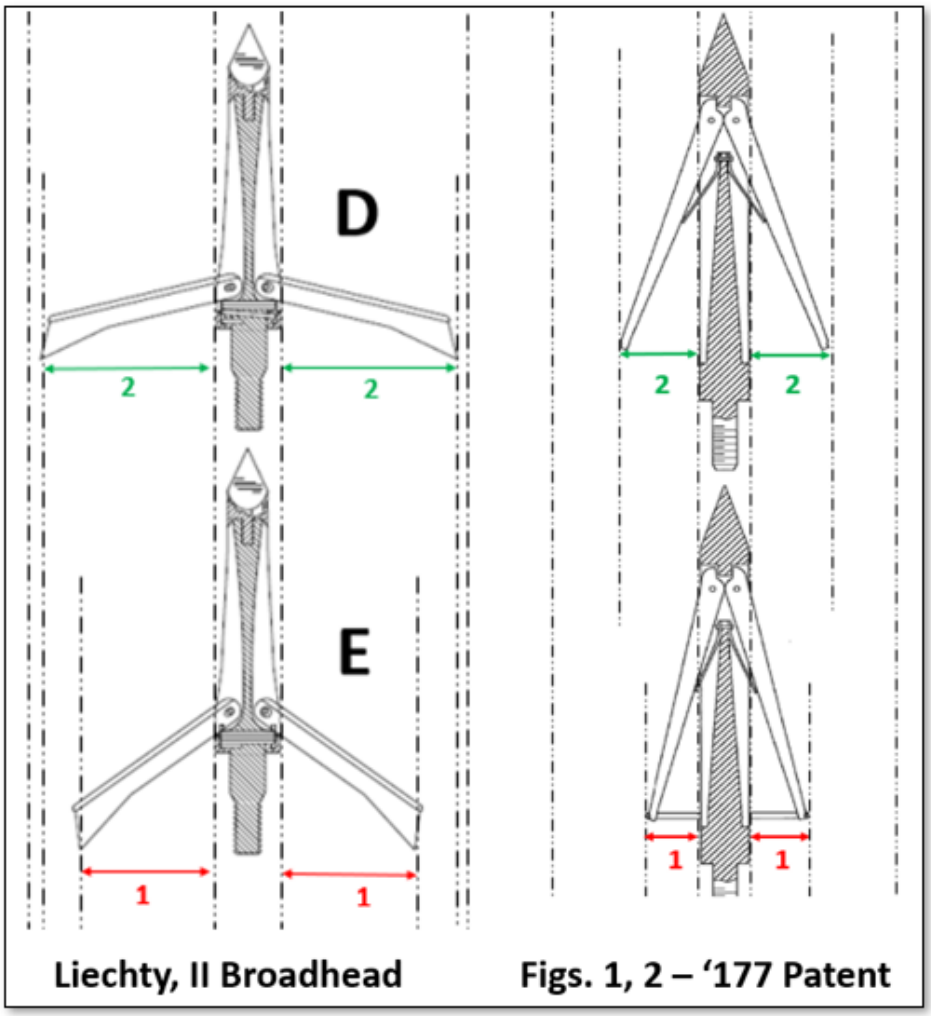

"a retracted position" – i.e., a first distance between the ferrule body and the second end of the blade member

4. [1.D] "a second blade member . . .second end"

Liechty discloses the limitations of **[1.B]**. Ex.1019, ¶194; Ex.1046, ¶26-27. Mr. Willkomm agrees, as discussed in Section II.A.2. above.

5. [1.E] "the [second] blade member having a retracted position . . . an extended position . . . distance"

Claim 1 requires "the second blade member having a retracted position" and an "extended position." "Claim 1 defines 'retracted position' as 'a first distance between the ferrule body and the second end of the blade member." Ex.1034, 75:8-11; Ex.1001, 5:34-36. "Claim 1 defines 'extended position' as the second end being spaced from the ferrule body by a distance which is greater than the first distance." Ex.1034, 75:18-21; Ex.1001, 5:36-38. The specification uses the same language to define the "retracted position" and "extended position." Ex.1001, 1:47-51; Ex.1034, 75:23-76:1.

Liechty discloses the "second blade" having a "retracted position" and an "extended position," as required by **[1.E]**. Ex.1019, ¶195; Ex.1046, ¶28-32. As the blades move forward the distance between the second end of each blade and the ferrule body gets larger. Referring to Exhibit 1024, Mr. Willkomm agrees, testifying: "The second distance is greater than the first distance." Ex.1034, 40:1-12.

6. [1.F] "at least one biasing member . . . extended position."

Liechty discloses the limitations of **[1.F]**. Liechty discloses "a biasing member or annular spring 80." Ex.1034, 24:5-8. The annular spring 80 biases the blades in the forward direction. Ex.1019, ¶196; Ex.1046, ¶33-36.

Mr. Willkomm interprets the phrase "the biasing member being the only element operable to hold the blade members in the extended position" to mean "the biasing member is the only element operable to exert a force on the blade member in the extended position." Ex.1034, 91:14-20. He testified that: (1) the phrase does not "mean that the biasing member must hold the blade member in a static position" (90:14-16); and (2) the word "element" refers "to a component of the broadhead" (119:24-120:3).

<u>Mr. Willkomm admitted that the annular spring in the Liechty is the only element operable to exert a force on the blade members</u>, testifying:

- "[T]he spring causes the blades to move forward" because "[t]he springs are acting upon the blades." Ex.1034, 30:22-25.
- "[D]uring use of the broadhead, the continuing urging force produced by the annular spring drives the blades in a forward direction." *Id.*, 34:23-25.

B. Claim 11

1. [11.A] "a ferrule . . . ferrule body"

Liechty discloses the limitations of **[11.A]**. Ex.1019, ¶202-203; Ex.1046, ¶39. Mr. Willkomm agrees. Ex.1034, 20:18-21, 21:8-18.

2. [11.B] "a first blade member . . . rearward end"

Liechty discloses the limitations of **[11.B]**. Ex.1019, ¶204; Ex.1046, ¶40-42. Mr. Willkomm agrees. Referring to Exhibit 1025, Mr. Willkomm admitted that "the first ends of the blades, which are circled red, are forward of the second ends of the blades, which are circled blue." Ex.1034, 44:1-4. Dr. Kuhn juxtaposed the figures in Exhibit 1025 with Mr. Willkomm's testimony. Ex.1046, ¶42 (excerpt reproduced on the following page).

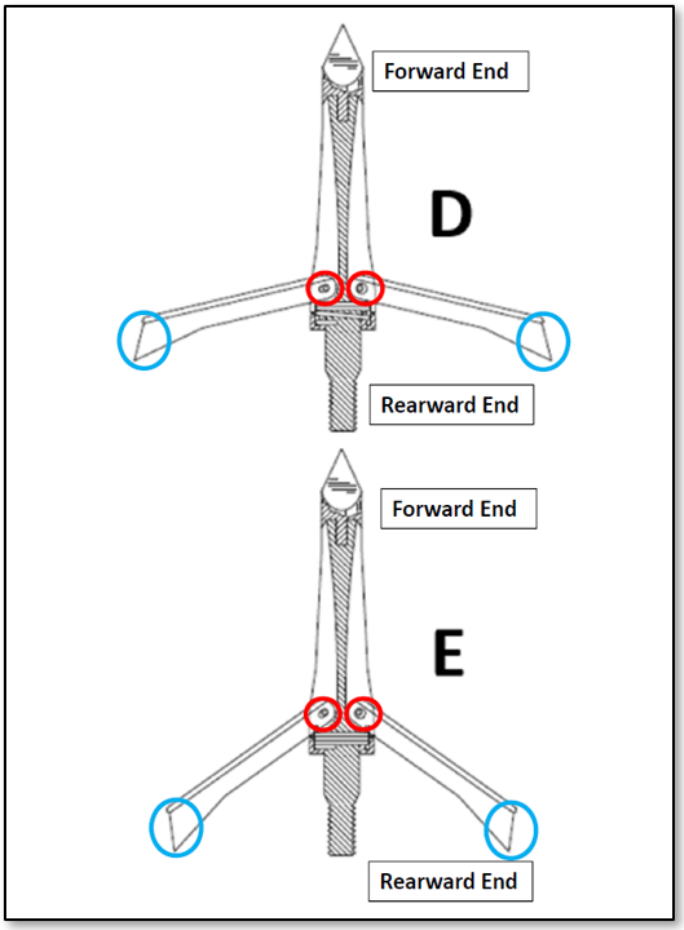

Referring to Ex. 1025, Mr. Willkomm testified:
"Q. Sure. So the first ends of the blades, which are circled red, are forward of the second ends of the blades, which are circled blue; correct?
A. Yes.
Q. In Figure D, the first end of each blade, which is circled red, is forward of the second end of the blades, which is circled blue; correct?
A. Yes. The ends circled in red are forward of the ends circled in blue. Yes."
Ex. 1034, 44:1-9.

3. [11.C] "the first blade member . . . greater than the first distance"

Liechty discloses the limitations of **[11.C]**. Ex.1019, ¶205; Ex.1046, ¶43-49. "Claim 11 defines 'retracted position' as 'a first distance between the ferrule body and the rearward end of the blade member." Ex.1034, 83:9-13; Ex.1001, 6:22-24. Claim 11 "defines 'extended position' as the rearward end being spaced from the ferrule body by a distance which is greater than the first distance." Ex.1034, 83:21-25; Ex.1001, 6:24-26. The specification uses the same language to define the "retracted position" and "extended position." Ex.1034, 84:1-4; Ex.1001, 2:3-7.

As discussed above, and as can be seen in Exhibit 1024, when the broadhead is the position shown in Figure E, there is a "first distance" which is "a distance between the end of the blades and the ferrule body." Ex.1034, 38:15; 39:13-18. As the blades move forward to the position shown in Figure E, there is a "second distance" between the end of the blades and the ferrule body. Ex.1034, 19-40:5. Mr. Willkomm testified: "The second distance is greater than the first distance." Ex.1034, 40:1-12; Ex.1046, ¶43-49.

4. [11.D] "the pivotal interconnection . . . ferrule body"

Liechty discloses the limitations of **[11.D]**. Ex.1019, ¶206; Ex.1046, ¶50.

5. [11.E] "a second blade member . . . rearward end"

Liechty discloses the limitations of **[11.E]**. Ex.1019, ¶207; Ex.1046, ¶51-53; *see* Section II.B.2. above.

6. [11.F] "the second blade member . . . greater than the first distance"

Liechty discloses the limitations of **[11.F]**. Ex.1019, ¶208; Ex.1046, ¶54-56. "Claim 11 defines 'retracted position' as 'a first distance between the ferrule body and the rearward end of the blade member." Ex.1034, 83:8-13; Ex.1001, 6:32-34. Claim 11 "defines 'extended position' as the rearward end being spaced from the ferrule body by a distance which is greater than the first distance." Ex.1034, 83:14-25; Ex.1001, 6:34-37. The specification uses the exact same language to define the "retracted position" and "extended position." Ex.1001, 2:11-15; Ex.1034, 83:9-13.

As discussed in Section II.A.3. above, and as can be seen in Exhibit 1024, there is a "first distance" (Ex.1034, 38:15; 39:13-18) and "second distance" between the end of the blades and the ferrule body (*Id*., 19-40:5). "The second distance is greater than the first distance." *Id*., 40:1-12; Ex.1046, ¶43-49, 54-60.

7. [11.G] "the pivotal interconnection . . . ferrule body"

Liechty discloses the limitations of **[11.G]**. Ex.1019, ¶209; Ex.1046, ¶61.

8. [11.H] "at least one biasing member . . . extended positions"

Liechty discloses the limitations of **[11.H]**. Ex.1019, ¶210; Ex.1046, ¶62. *See* Section II.A.6. above.

III. VANDEWATER ANTICIPATES THE CLAIMS

Dr. Kuhn's declarations demonstrate and Mr. Willkomm's deposition testimony confirms that Vandewater discloses all limitations of claim 11.

A. Claim 11

1. [11.A] "a ferrule . . . ferrule body"

Vandewater discloses the limitations of **[11.A]**. Ex.1019, ¶93-95; Ex.1046, ¶69-71. Vandewater discloses a "ferrule body 14." Ex.1019, ¶94-95 (citing first and second embodiments). Mr. Willkomm admitted that "Figures 2 and 3 show a ferrule body" Ex.1034, 61:20-22. It is undisputed the "ferrule body 14" contains the limitations of [**11.A**]. Ex.1019, ¶93-95; Ex.1046, ¶69-71.

Relevant to the analysis below of the other limitations in claim 11, <u>Mr. Willkomm testified</u>:

- the "ferrule body contains a threaded portion for receiving a retaining mechanism" that "includes an engaging element such as a ball bearing 34 that is urged toward a notch 24 by a biasing element 36 . . "the biasing element 36 is disposed within the ferrule body." Ex.1034, 62:1-11.
- "the biasing element may be a compression spring" and "the blade member is held in the center position due to the ball bearing being urged in the notch by the biasing element." 62:15-24.

2. [11.B] "a first blade member . . . rearward end"

Vandewater discloses the limitations of **[11.B]**. Ex.1019, ¶96; Ex.1046, ¶72. Vandewater discloses "a first blade 212" and "a second blade 213" Ex.1019, ¶96-97. Vandewater expressly teaches that the ferrule body 14 (described in the first and second embodiments) may be used with the first blades 212 and second blades 213 (described in the third embodiment). Ex.1019, ¶96-97; Ex.1046, ¶72-78. Mr. Willkomm agrees. Ex.1034, 64:18-22. Vandewater discloses that all that needs to be done to use the ferrule body 14 with the first blade 212 and second blade 213 is: (1) widen the slot to accommodate the two blades; and (2) add a notch at the bottom of the blade to accommodate the ball bearing urged forward by the biasing element, or compression spring. Ex.1046, ¶74-78. Mr. Willkomm agrees. Ex.1034, 65:16-22, 67:23-68:8. A broadhead utilizing the ferrule body 14 with the first blade 212 and

second blade 213 is depicted in Exhibit 1026. Ex.1046, ¶77-78; Ex. 1034, 69:6-72:8. Exhibit 1026 is reproduced below.

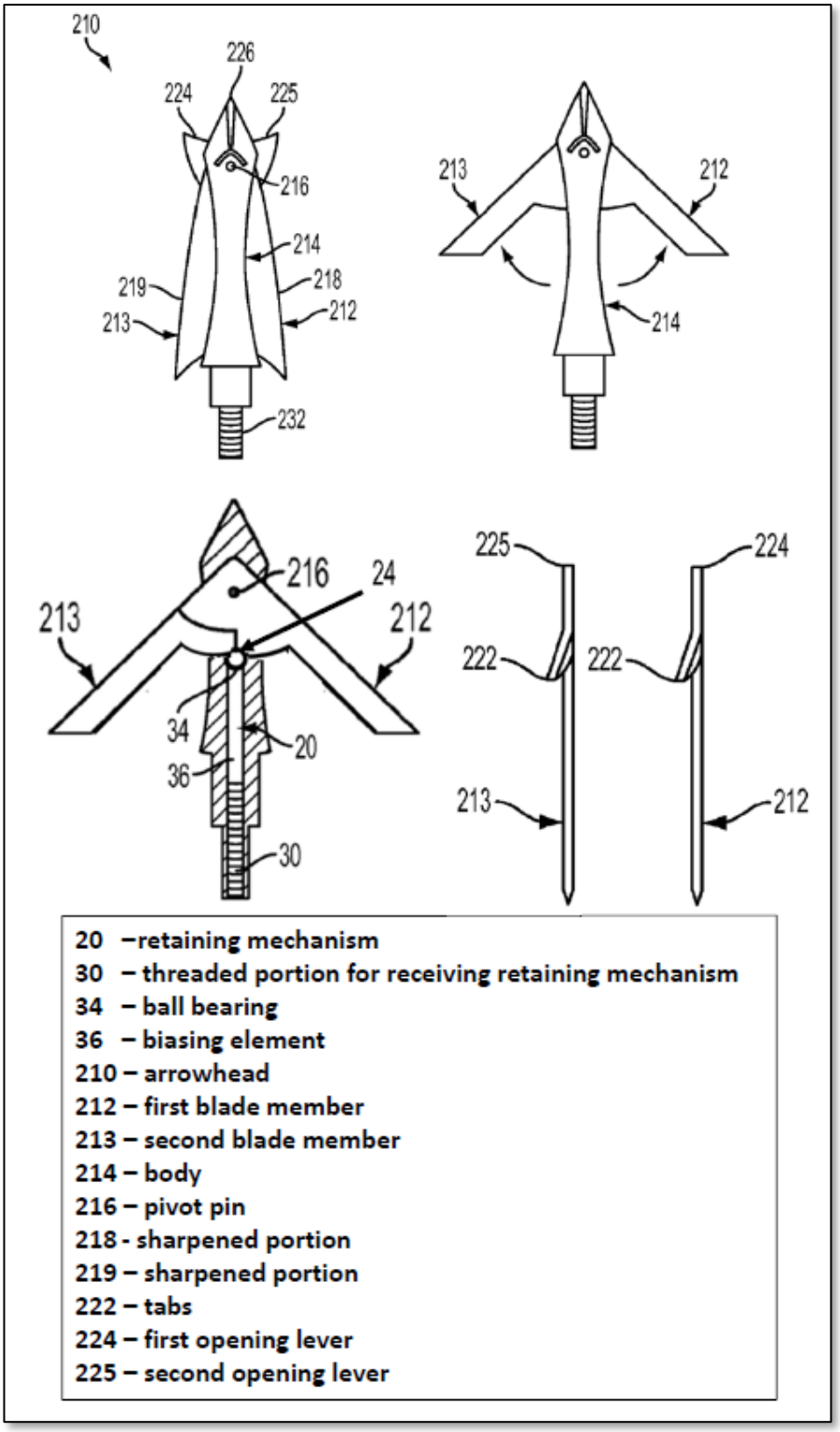

3. [11.C] "the first blade member . . . first distance"

Vandewater discloses the limitations of **[11.C]**. Ex.1019, ¶97; Ex.1046, ¶79-82. Vandewater discloses the first blade having: (1) "a retracted position" – i.e., a first distance between the ferrule body and the rearward end of the blade member; and (2) "an extended position" – i.e., the rearward end being spaced from the ferrule body by a distance which is greater than the first distance. Ex.1046, ¶80-82. Relevant to this analysis, Mr. Willkomm testified "the claims [of the '177 patent] are not limited to blade members that move independently from each other." Ex.1034, 87:17-22.

This limitation is satisfied by Vandewater in several ways. First, it is satisfied when the first blade 212 moves from the "folded position" (Figures 7 and 10) to the "fully deployed position" (Figures 8 and 11). Ex.1046, ¶81 (excerpt reproduced on the following page); *see* Ex.1036; Ex.1034, 69:6-72:8.

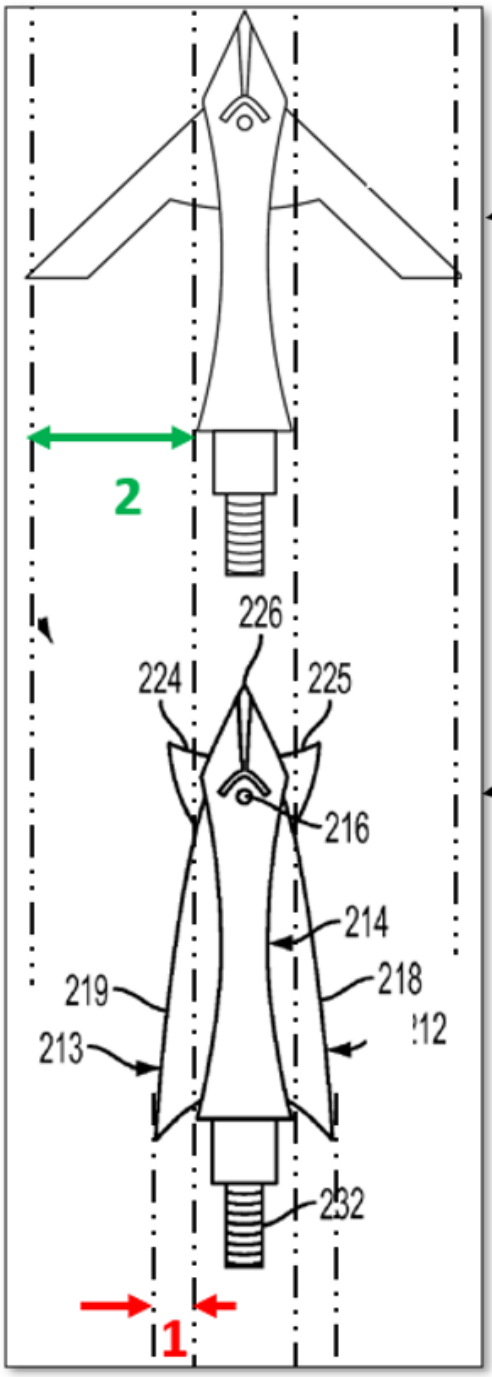

"an extended position" – i.e., the rearward end being spaced from the ferrule body by a distance which is greater than the first distance

"a retracted position" – i.e., a first distance between the ferrule body and the rearward end of the blade member

Second, it is satisfied when the first blade 212 moves from a "fully deployed position" (Figures 8 and 11) rearward as a result of an external force applied to the leading edge of the first blade 212 that is greater than the spring tension of the biasing element. Ex.1046, ¶82 (excerpt reproduced below); *see* Ex.1036; Ex.1034, 69:6-72:8.

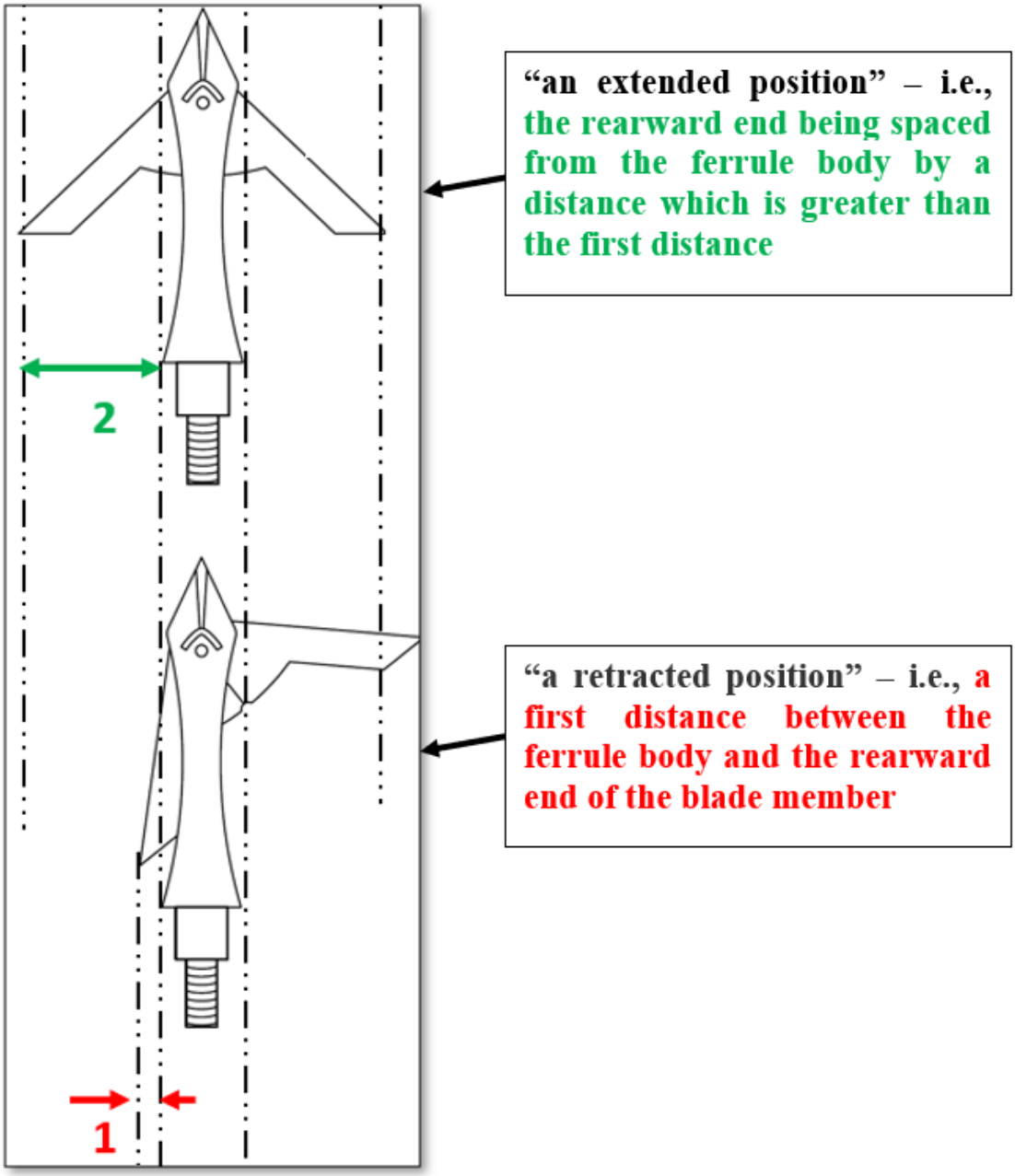

To aid the Board's understanding of how the blades move between a "retracted position" and an "extended position," Exhibit 1036 is a video animating the figures above and depicting the broadhead in use. Ex.1046, ¶78.

4. [11.D] "the pivotal interconnection . . . ferrule body"

Vandewater discloses the limitations of **[11.D]**. Ex.1019, ¶99; Ex.1046, ¶83.

5. [11.E] "a second blade member . . . rearward end"

Vandewater discloses all of the limitations of **[11.E]**. Ex.1019, ¶100; Ex.1046, ¶84. *See* Section III.A.2. above.

6. [11.F] "the second blade member . . . first distance"

Vandewater discloses the limitations of **[11.F]**. Ex.1019, ¶101; Ex.1046, ¶85-87. This limitation is satisfied in several ways. First, this limitation is satisfied when the second blade 213 moves from the "folded position" (Figures 7 and 10) to the "fully deployed position" (Figures 8 and 11). Ex.1046, ¶86 (excerpt reproduced on the following page); *see* Ex.1036; Ex.1034, 69:6-72:8.

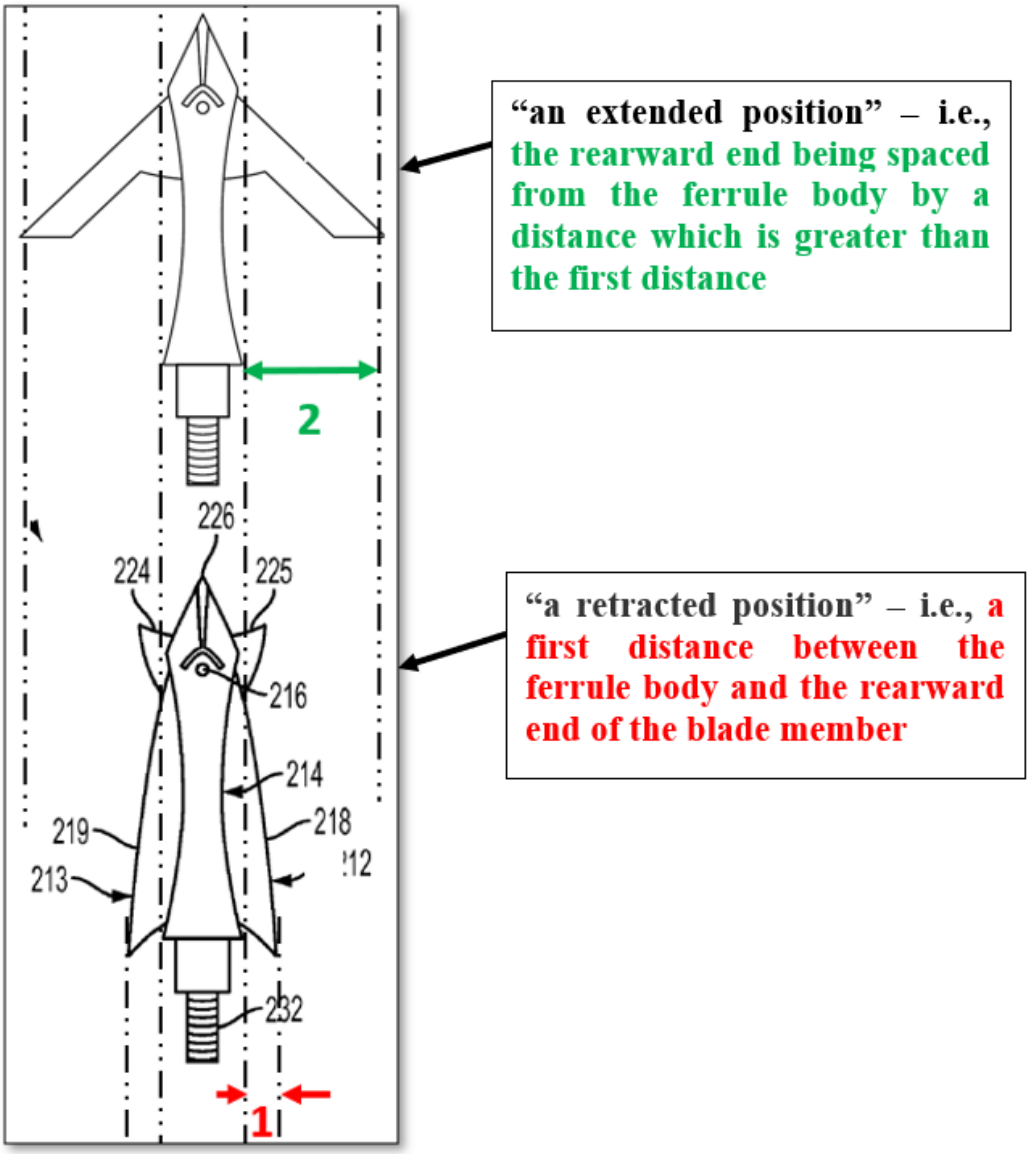

Second, this limitation is satisfied when the second blade 213 moves from "fully deployed position" (Figures 8 and 11) rearward as a result of an external force applied to the leading edge of the second blade 213 that is greater than the spring tension of the biasing element. Ex.1046, ¶87 (excerpt reproduced on the following page); *see* Ex.1036; Ex.1034, 69:6-72:8.

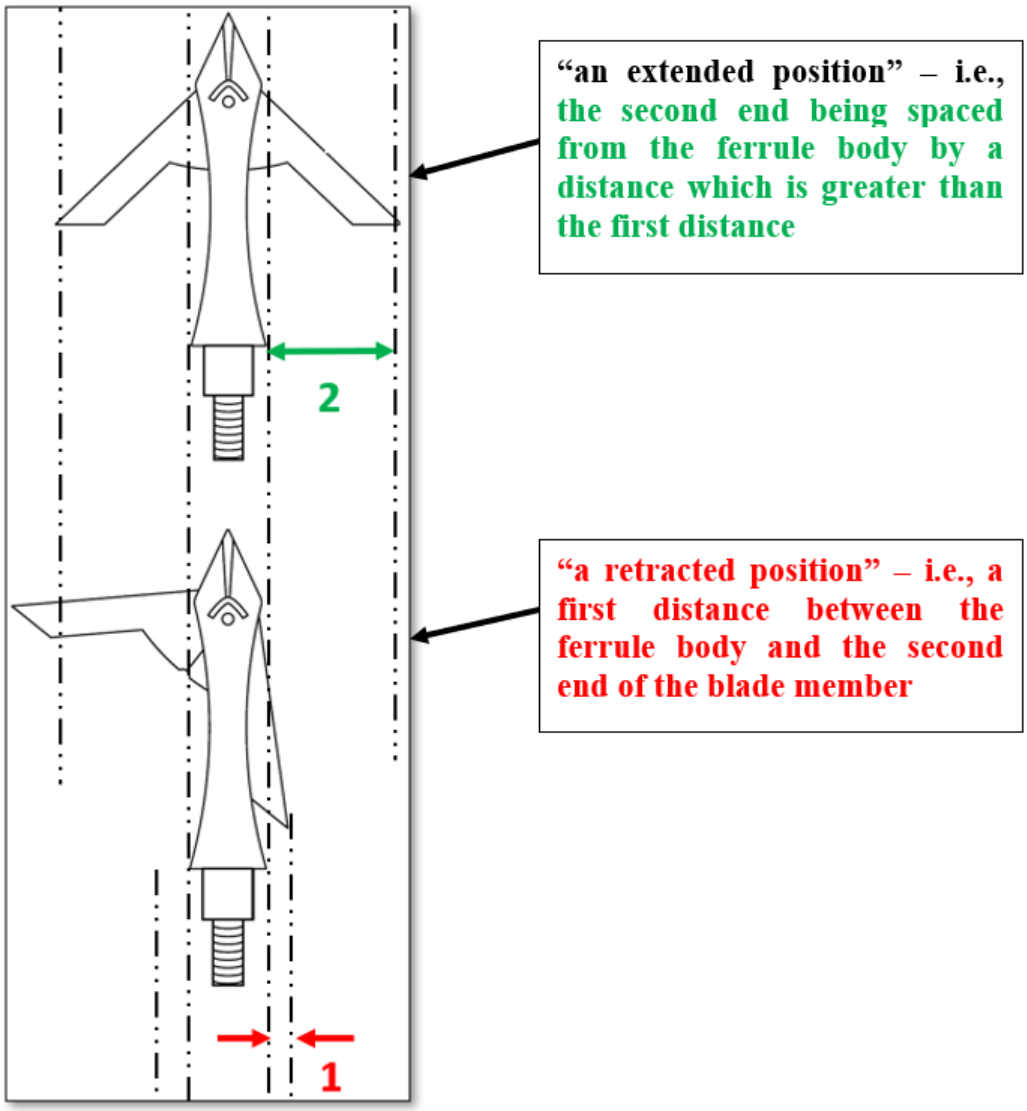

7. [11.G] "the pivotal interconnection . . . ferrule body"

Vandewater discloses the limitations of **[11.G]**. Ex.1019, ¶103; Ex.1046, ¶88.

8. [11.H] "at least one biasing member . . . extended positions"

Vandewater discloses the limitations of **[11.H]**. Ex.1019, ¶104; Ex.1046, ¶89-92. Vandewater discloses a "biasing element that biases or urges an engaging

element into the notch to retain the blade and limit or impede pivotal movement of the blade." Ex.1003, 1:42-45. The biasing element can be a "compression spring." Ex.1003, 3:63-66; Ex.1034, 70:5-7. The "biasing force . . . retains the blade in its initial or centered position." Ex.1003, 1:64-65. Vandewater discloses: "a desired resistance to pivotal movement can be achieved by selecting a biasing element 36 capable of delivering a desired amount of force and damping. Pivotal movement or resistance to pivotal movement of blade 12 may be limited or controlled by the … spring force ..." Ex.1003, 4:27-41. Mr. Willkomm admitted that the blades are held in the center or fully deployed position because of the biasing element. Ex.1034, 71:2-12 and 71:15-25.

Notably, Mr. Willkomm admitted that the limitation "biasing member biasing the first and second blade members towards the extended positions" would be satisfied with a broadhead containing a separate element located between the spring and the blades. Ex.1034, 119:18-23; *see* Ex.1046, ¶92. His admission is consistent with what a POSITA already knows, which is the compression spring, not the ball bearing, in Vandewater generates the force to bias the blades into the centered or fully deployed position. Ex.1046, ¶91-92. The ball bearing 34 has no force generating ability. *Id*.

IV. LINT ANTICIPATES THE CLAIMS

Patent Owner contends that Lint does not disclose "blade members" (pertinent to claims 1 and 11) or that "the biasing member being the only element operable to hold the blade members in the extended position" (pertinent to claim 1). Patent Owner's contentions have no merit, as explained below and as demonstrated by Mr. Willkomm's deposition testimony.

A. The meaning of the term "blade"

The ordinary and customary meaning of "blade" is "a tool or device with an edge." Ex.1046, ¶96; Ex.1047, ¶16,24. Patent Owner's interpretation of "blade" requiring "a cutting edge or sharp part" is overly restrictive because it improperly excludes blades commonly used in the industry that have "dull," blunt," and "unsharpened" edges. Ex.1046, ¶97-98; Ex.1047, ¶17-23. Notably, the words "cutting edge' and "sharp" do not appear anywhere in the claims, the specification, or prosecution history of the '177 patent.

Broadheads are sold and used with blades that have dull, blunt, and unsharpened edges. Ex.1046, ¶98 (citing prior art disclosing "blades" that are "dull,"

"blunt," and "unsharpened."); Ex.1047, ¶19-23.[4] They are considered "blades" in the archery industry even though they do not contain "sharp" edges. *Id*.

Furthermore, an edge of a blade does not need to be "sharp" in order to cut flesh. Ex.1046, ¶99-100. The Patent Owner, Matthew Futterre, confirmed this in a video that he published prior to the filing date of the '177 patent. *Id*. The video is attached as Exhibit 1041. In the video, at the 0038-01:57 minute mark, Mr. Futterre confirms:

- a "safe to handle edge" "can achieve capillary level cutting that is based on the laws of physics" and all you need "is an edge to do the cutting plus velocity plus pressure."
- it is a "myth that you need scalpel sharp broadhead blades" to achieve cutting.
- "any compound bow today even recurves" will cause a broadhead to travel "well in excess of 125-130 miles an hour" and "that velocity

[4] Non-instituted references show "the knowledge that skilled artisans would bring to bear in reading the prior art." *Ariosa Diagnostics v. Verinata Health, Inc*., 805 F.3d. 1359, 1365 (Fed. Cir. 2015).

coupled with the pressure of being forced through an animal takes this safe to handle edge and cuts at the capillary level every single time."[5]

He made other public statements, including: "To cut, you must have an edge to do the work, velocity of that edge crossing the item wished to cut and enough pressure to force a cut to occur." *See* Ex.1046, ¶100 (citing Ex.1050).

Mr. Willkomm conceded that a blade does not need to have a sharp edge or sharp part to constitute a "blade." For example, when asked about a well-known bowfishing broadhead sold and used in the archery industry, Mr. Willkomm testified that the broadhead had "blades" even though it did not contain a sharpened edge. Ex.1034, 163:14-25. Dr. Kuhn juxtaposed Mr. Willkomm's testimony with an excerpt from Exhibit 1031 showing the bowfishing arrowhead. Ex.1046, ¶102 (excerpt reproduced below).

[5] Mr. Willkomm did not consider Mr. Futterre's statements before rendering his opinions in this matter. Ex.1034, 167:13-18 and 168:8-12.

Referring to Ex. 1031, Mr. Willkomm testified:

Q. And my question is, in the photograph of the fish point --
A. Yes.
Q. -- do you see any cutting edge or a flat sharp part on the blades?
A. Nope.
Q. So in your opinion does this fish point have blades or barbs?
A. It has both.
Ex. 1034, 163:14-25.

B. The term "blade" and "barb" are often used interchangeably in the archery industry

The terms "blade" and "barb" are often used in the archery industry to refer to the same element or device on a broadhead. Ex.1046, ¶102-105; Ex.1047, ¶25-28. In the archery industry, the term "barb" refers to an element of a broadhead in which the angle formed between the trailing or rear edge of the element and the ferrule is less than 90 degrees. Ex.1046, ¶103; Ex.1047, ¶25. The prior art confirms that the terms "blade" and "barb" are often used interchangeably. Ex.1046, ¶104 (citing examples from the prior art). "[A] blade can be a barb, and a barb can be a blade." Ex.1047, ¶25.

Likewise, Mr. Willkomm's testimony confirms that the terms "blade" and "barb" can refer to the same element of a broadhead. For example, when asked about various broadheads in the prior art, Mr. Willkomm conceded that "blade" and "barb"

can refer to the same element of a broadhead. For easy reference, Dr. Kuhn juxtaposed figures from Exhibits 1028-1031 with Mr. Willkomm's testimony. Ex.1046, ¶105.

Moreover, Mr. Willkomm testified that all of the "blade members" shown and described in the '177 patent are "barbs." Mr. Willkomm states that the plain and ordinary meaning of "barb" is "a projection extending backward from a point having an angle of less than 90 degrees from the body." Ex.2008, ¶77; Ex.1034, 133:23-134:5. During his deposition, he conceded that all of the "blade members" in the '177 patent are "barbs" – i.e., they "extend backwards from a point having an angle of less than 90 degrees from the ferrule body." Ex.1034, 123:18-124:4, 133:23-135:2.

Further, Mr. Willkomm conceded that all of the broadheads shown and described in the '177 patent are "barbed broadheads." Mr. Willkomm states that Idaho Administrative Code defines a "barbed broadhead as 'a broadhead which has any portion of the rear edge of the broadhead forming an angle less than ninety (90) degrees with the shaft or ferrule.'" Ex.2008, ¶ 35. During his deposition, he testified that all of the broadheads in the '177 patent are "barbed broadheads" per the Idaho Administrative Code. Ex.1034, 131:15-19.

C. Lint discloses "blades"

The "barbs 19" disclosed in Lint are "blades" because they are a tool or device with an edge. Ex.1046, ¶108-111; Ex.1047, ¶27. As explained in Dr. Kuhn's deposition and Reply Declaration, the edge is shown in Figures 1 and 4 of Lint. *Id*. An annotated excerpt from Dr. Kuhn's Reply Declaration identifying the edges (outlined in red) is shown below.

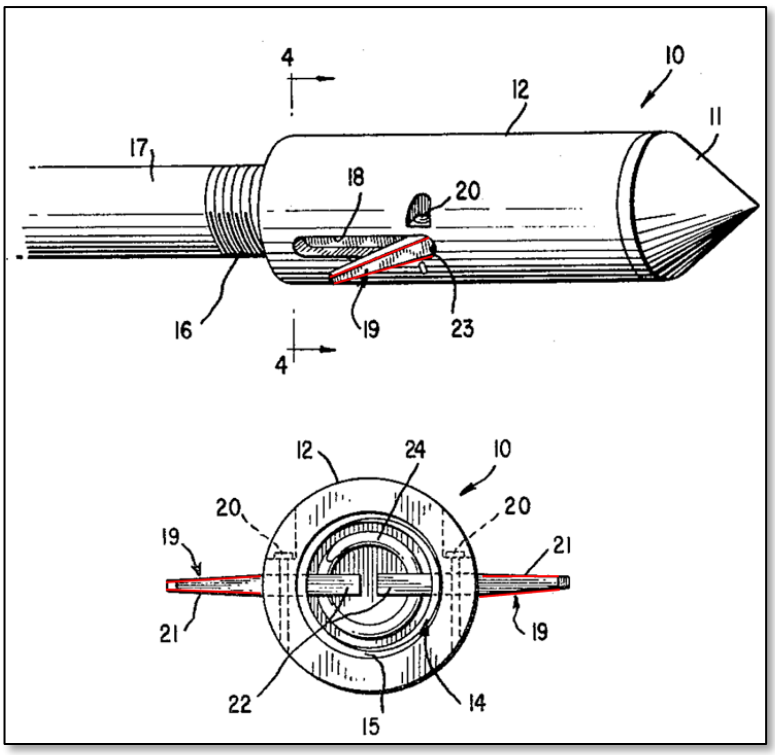

A POSITA knows that Lint refers to the blades as "barbs" because the angles formed between the trailing or rear edge of the blade members and the ferrule is less than 90 degrees. Ex.1046, ¶110; Ex.1047, ¶27. Just because Lint uses the word "barb" does not change the fact each "barb 19" in Lint is a "blade" – i.e., a tool or device that has an edge. *Id*. A POSITA knows each "barb 19" of Lint constitutes a

"blade" even though Lint does not expressly describe each "barb 19" as being "sharp." *Id*.

Even under Patent Owner's construction of "blade," Lint discloses "blades." The "barbs" in Lint satisfy Patent Owner's definition of "blade" because they have a "cutting edge" and/or a "flat sharp part." Ex.1046, ¶112-114. The "cutting edge" and "flat sharp part" are shown in the annotated Figures 1 and 4 above. *Id*. The outer edge on each "barb 19" in Lint can cut flesh. Ex.1046, ¶112-114. All that is needed for such an edge to achieve cutting of flesh is velocity and pressure. *Id*.; Ex.1041, 00:44-1:57 minute mark.

D. Lint discloses "the biasing member being the only element operable to hold the blade members in the extended position"

Lint discloses a "spring 24" that "operates to bias the barbs 19 in the open position illustrated in by FIGURE 2. Ex.1002, 2:53-58, Fig. 2. Mr. Willkomm agrees, testifying (1) "it's the spring of the Lint broadhead that causes the outer barbs to move forward or extend" (Ex.1034, 48:25-3); and (2) the "spring 24 acts to hold the barbs 19 in the open position" and that "[u[nder these circumstances, the arrowhead is in condition for hunting live game" (58:3-15). Contrary to Patent Owner's contention, Lint's barbs/blades will expand forward as a result of the force from the spring when the broadhead: (1) is moving through an animal; (2) stops in an animal; or (3) exits an animal. Ex.1046, ¶93. Mr. Willkomm agrees. Ex.1034,

46:5-18, 47:5-49:3. To illustrate this point, Exhibit 1037 is a video depicting the Lint broadhead in use. Ex.1046, ¶93.

Any contention by the Patent Owner that the "spring 24" is not the only element that exerts a force on the blades in an extended position is wrong. A POSITA knows that the "spring 24" is the only element that is operable to exert a force on the blade member in the extended position. Ex.1046, ¶117-119. There is no other component of the Lint broadhead that has this capability. *Id*. Mr. Willkomm conceded this point during his deposition, testifying that "it's the spring of the Lint broadhead that causes the outer barbs to move forward or extend." Ex.1034, 48:25-3. He conceded that: (1) he does not know if the top of the arrowhead biases the outer barbs in an extended position and does not know if the top of the arrow shaft exerts any load at all to the barbs (Ex.1034, 55:18-56:4); (2) the arrow shaft cannot move in the forward direction unless it is screwed into that direction (226:2-15); and (3) when the arrow shaft is screwed in the forward direction, the blades actually move backward, not forward (54:20-25).

V. LINT ALONE OR IN COMBINATION WITH MINISINI AND/OR KREIGER RENDERS THE CLAIMS OBVIOUS

To the extent the Board interprets "blade" to require a "sharp edge," it is obvious to a POSITA to sharpen the outer edge of Lint's "barbs 19." Ex.1019, ¶115-119; Ex.1046, ¶120-127. Common knowledge, the prior art as whole, made it obvious to sharpen the edge of Lint's "barbs 19." *Id*.

A. Adding sharp edges to barbs/blades is a known and common practice

The prior art as a whole illustrates the benefits of sharpening the edge of Lint's "barbs 19." Hunters have been adding sharp edges to barbs/blades for centuries, and that the process for doing so is simple and easy. Ex.1019, ¶115-119; Ex.1046, ¶122-126 (citing exemplary prior art, including art disclosing "the forward edges 23 of the barbs are sharpened so to provide a cutting surface."); Ex.1034, 166:16-167:2 and 172:7-10. Minisini is one example from the prior art expressly teaching sharpening the leading edge of an expandable barb, like the barb/blade in Lint. Ex.1005, 2:31-34 ("barb preferably has its outer longitudinal edge sharpened to cut through a fish."). Adding sharpened edges to leading edges of blade/barbs also enhances the aerodynamic flight characteristics of broadheads. Ex.1019, ¶116-118.

Mr. Willkomm contends that "adding a cutting edge to the barb of Lint would negatively affect the strength of the barb. Shaving off a portion of the outside edge reduces the structural integrity of the barb and creates a situation in which the barb is likely to fail." Ex.2008, ¶98. Mr. Willkomm's contention, however, is wrong for several reasons. First, a POSITA knows that mechanical broadhead components, including barbs/blades, are made from various steels, including for example high carbon steel stainless steel because of their known strength and durability. Ex.1046, ¶126-127; Ex. 1034:169:17-25. A POSITA would know to make the Lint broadhead with strong and durable steel components. *Id*. Second, Mr. Willkomm's contention

wrongly assumes that the components of the Lint broadhead are not made from such strong and durable components. Mr. Willkomm, however, admitted during his deposition that his assumption is not supported by any evidence. Ex.1034, 59:8-18.

B. The Lint broadhead is not limited to fishing

In his declaration, Mr. Willkomm contends that the Lint broadhead is "used for fishing versus hunting game like deer or elk." Ex.2008, ¶34. Mr. Willkomm's contention is irrelevant and wrong for several reasons. First, there is nothing in the language of the claim that limits the type of animal that may be hunted with the claimed broadhead. Mr. Willkomm agrees. Ex.1034, 86:8-16, 87:6-12 ("There's no statement of use of any kind in claim 1 or claim 11."). Second, there is nothing in the disclosure of Lint that limits the use of the Lint broadhead to hunting fish. Lint discloses a "hunting arrowhead" and Lint expressly states that it can be used for "field shooting, hunting, target practice, fishing and many others …." Ex.1002, 1:14-18. Lint discloses that the broadhead is used for hunting "animals" and "hunting live game." *Id*., 2:62-64. "Animals" and "live game" include many different animals, not just fish. Mr. Willkomm agrees that the Lint broadhead is "in condition to hunt live game" (Ex.1034, 58:3-15) and that "live game" includes "deer," "rabbits," "wild turkey," "black bear," "coyotes", and "birds" and other animals. (Ex.1034, 10:11-11:20).

VI. HENDRICKS ALONE OR IN COMBINATION WITH THE KNOWLEDGE OF A POSITA RENDERS THE CLAIMS OBVIOUS

Adding a second blade member to the Hendrick broadhead would have been obvious as a mere duplication of parts lacking unexpected results. Ex.1019, ¶164-181; *see In re Abrahamsen,* 53 F.2d 893, 894 (CCPA 1931). *In re Abrahamsen* is instructive. The claims at issue in *In re Abrahamsen* were directed to a floor scraper having two detachable blades. *Id.*, 53 F.2d at 893-894. The cited prior art only taught a scraper with a single detachable blade. *Id.* The U.S Court of Custom and Patent Appeals (the predecessor to the Federal Circuit) found that "the use of two such blades would readily suggest itself to the mechanic. It is a mere duplication of parts, and this has been uniformly held to be not patentable." *Id.*, at 894. Like *In re Abrahamsen*, it would have been obvious for a POSITA to add a second blade member to the broadhead of Hendricks. Ex.1019, ¶164-187; Ex.1040, 128:17-132:7.

VII. CONCLUSION

For the reasons stated in the Petition and this Reply, Bowmar respectfully requests that the Board find the challenged claims invalid.

BANNER & WITCOFF, LTD

Dated: December 31, 2024

By: /Jason S. Shull/

Jason S. Shull
Reg. No. 47,085
Banner & Witcoff, Ltd.
71 South Wacker Drive, Ste 3600
Chicago, Illinois 60606
Tel: (312) 463-5000
Fax: (312) 463-5001
jshull@bannerwitcoff.com

CERTIFICATION UNDER 37 CFR § 42.24(d)

Under the provisions of 37 CFR § 42.24(d), the undersigned hereby certifies that the word count for the foregoing Petitioner's Corrected Reply to Patent Owner's Response to Petition for *Inter Partes* Review totals 5,599, which is less than the 5,600 allowed under 37 CFR § 42.24(a)(1)(i). This total includes 5,194 words as counted by the Word Count feature of Microsoft Word and 405 words used in annotations.

Pursuant to 37 C.F.R. § 42.24(a)(1), this count does not include the table of contents, the table of authorities, the certificate of service, this certification of word count, the claims listing appendix, or appendix of exhibits.

BANNER & WITCOFF, LTD

Dated: December 31, 2024

By: /Jason S. Shull/

Jason S. Shull
Reg. No. 47,085
Banner & Witcoff, Ltd.
71 South Wacker Drive, Ste 3600
Chicago, Illinois 60606
Tel: (312) 463-5000
Fax: (312) 463-5001
jshull@bannerwitcoff.com

CERTIFICATION OF CHANGES

Pursuant to the Board's January 30, 2024 email, Petitioner certifies no changes other than those identified in Ex. 1051 have been made.

BANNER & WITCOFF, LTD

Dated: December 31, 2024

By: /Jason S. Shull/

Jason S. Shull
Reg. No. 47,085
Banner & Witcoff, Ltd.
71 South Wacker Drive, Ste 3600
Chicago, Illinois 60606
Tel: (312) 463-5000
Fax: (312) 463-5001
jshull@bannerwitcoff.com

CERTIFICATE OF SERVICE

The undersigned certifies service on the Petitioner, pursuant to 37 C.F.R. § 42.6(e), by electronic (e-mail) delivery of a true copy of the foregoing PETITIONER'S CORRECTED REPLY TO PATENT OWNER'S RESPONSE TO PETITION FOR INTER PARTES REVIEW, to lead and back-up counsel of record for Petitioner as follows:

Jason E. McKinnie
jmckinnie@mckinniepaul.com

Michael D. Paul
mpaul@mckinniepaul.com

Dated: December 31, 2024 By: /Carlos Goldie/

Carlos Goldie