UNITED STATES PATENT AND TRADEMARK OFFICE

BEFORE THE PATENT TRIAL AND APPEAL BOARD

META PLATFORMS, INC.,
Petitioner

v.

ALMONDNET, INC. and INTENT IQ, LLC,
Patent Owner

Case IPR2022-01436
U.S. Patent No. 8,244,582 B2
Issue Date: August 14, 2012

Title: METHOD AND STORED PROGRAM FOR ACCUMULATING DESCRIPTIVE PROFILE DATA ALONG WITH SOURCE INFORMATION FOR USE IN TARGETING THIRD-PARTY ADVERTISEMENTS

PETITION FOR *INTER PARTES* REVIEW OF U.S. PATENT NO. 8,244,582 B2

Table of Contents

Page

I. MANDATORY NOTICES UNDER §42.8(A)(1) 8

A. Real Party-In-Interest under §42.8.(b)(1) 8

B. Related Matters under §42.8(b)(2) 8

C. Lead and Back-Up Counsel under §42.8(b)(3) 9

D. Service Information 10

II. FEE PAYMENT 10

III. REQUIREMENTS UNDER §§ 42.104 AND 42.108 AND CONSIDERATIONS UNDER §§ 314(A) AND 325(D) 10

A. Grounds for Standing 10

B. Identification of Challenge and Statement of Precise Relief Requested 10

C. Considerations Under §§ 314(a) and 325(d) 11

IV. OVERVIEW OF THE ’582 PATENT 12

A. Level of Ordinary Skill in the Art 12

B. Specification Overview 12

V. CLAIM CONSTRUCTION 13

VI. THE CHALLENGED CLAIMS ARE UNPATENTABLE 13

A. Overview of Grounds 13

B. Ground 1: Claims 11, 13-15, 19-20 Are Obvious Over Rosenberg in View of Zeff and Sterne 16

1. Claim 11 16

Table of Contents
(continued)

Page

a. "electronically receiving at a programmed computer system coupled to a global computer network, from at least one server controlled by one of a plurality of unaffiliated third parties, a partial profile of an entity that uses a user computer coupled to the global computer network and accessing a website, which partial profile is available to one of the third parties and contains at least one profile attribute related to the entity, and automatically with the computer system storing the received partial profile;" 21

b. "wherein receiving the partial profile is achieved as a result of automatic electronic URL redirection from a portion of a page of the website accessed by the user computer;".....42

c. "automatically with the computer system electronically adding the received partial profile to a maintained profile believed to be related to the same entity;".....46

d. "automatically with the computer system generating and storing an electronic record of which of the plurality of unaffiliated third parties contributed to the maintained profile particular profile attributes;".....48

e. "wherein the maintained profile, including the added partial profile, comprises data used in targeting third-party advertisements to the user computer over the global computer network.".....49

Table of Contents
(continued)

Page

2. Claim 13: "The data storage medium of claim 11 wherein the computer system electronically adding the received partial profile to a maintained profile believed to be related to the same entity comprises the computer system adding the received partial profile to a maintained profile believed related to the same entity on account of the received partial profile and the maintained profile being related to the same user computer." 53

3. Claim 14: "The data storage medium of claim 13 wherein the computer system determines that the received partial profile and the maintained profile are related to the same user computer by automatically reading a cookie on the user computer." 55

4. Claim 15: "The data storage medium of claim 11 wherein the indicia of instructions instruct the processor to perform a method that further comprises: automatically with the computer system electronically maintaining an electronic record of which unaffiliated third party contributed, to the maintained profile, the profile attributes used in targeting the advertisements." 58

5. Claim 19: "The data storage medium of claim 11 wherein the indicia of instructions instruct the processor to perform a method that further comprises: automatically with the computer system selecting profile attributes from the maintained profile based on the source thereof." 60

6. Claim 20: "The data storage medium of claim 11 wherein the indicia of instructions instruct the processor to perform a method that further comprises: automatically with the computer system electronically reading a cookie previously stored on the entity's computer, as a result of the URL redirection." 62

C. Ground 2: Claim 16 Is Obvious Over Rosenberg in View of Zeff and Sterne, in Further View of Farber 63

Table of Contents
(continued)

Page

1. Claim 16: "The data storage medium of claim 11 wherein the indicia of instructions instruct the processor to perform a method that further comprises: automatically with the computer system electronically determining whether the received partial profile contains any profile attributes about the entity that were not previously contained in a maintained profile." 63

D. Grounds 3-4: Obviousness in Further View of Merriman 69

VII. CONCLUSION 75

List of Exhibits

Exhibit No.	Description of Document
1001	U.S. Patent No. 8,244,582 B2 to Roy Shkedi (filed May 25, 2011, issued August 14, 2012) ("'582" or "'582 patent")
1002	Declaration of Christopher M. Schmandt ("Schmandt")
1003	U.S. Patent No. 6,073,241 to Jonathan Rosenberg et al. (filed August 29, 1996, issued June 6, 2000) ("Rosenberg")
1004	Excerpts from Robin Zeff & Brad Aronson, *Advertising on the Internet* (1997) ("Zeff")
1005	Excerpts from Jim Sterne, *What Makes People Click: Advertising on the Web* (1997) ("Sterne")
1006	Excerpts from Mark R. Brown et al., *Special Edition Using HTML 3.2* (3d ed. 1997) ("Brown")
1007	U.S. Patent No. 5,978,791 to David A. Farber et al. (filed October 24, 1997, issued November 2, 1999) ("Farber")
1008	U.S. Patent No. 8,566,154 B2 to Dwight Merriman et al. (filed February 26, 2002, issued October 22, 2013 ("Merriman")
1009	U.S. Patent Application Ser. No. 09/362,008, filed on July 27, 1999 (parent application of Merriman, EX1008)
1010	Redline comparison showing differences in written descriptions of (1) U.S. Patent No. 8,566,154 B2 (EX1008) and (2) U.S. Patent Application Ser. No. 09/362,008 (EX1009)
1011	U.S. Provisional Application No. 60/194,146, filed on August 3, 1998 (provisional application of Merriman, EX1008)

List of Exhibits

Exhibit No.	Description of Document
1012	Redline comparison showing differences in written descriptions of: (1) U.S. Patent No. 8,566,154 B2 (EX1008) and (2) U.S. Provisional Application No. 60/194,146 (EX1011)
1013	Craig Partridge, *Duplicate Messages and SMTP*, RFC 1047, February 1988
1014	Defendant's Reply Claim Construction Brief in *AlmondNet, Inc. v. Intent IQ, LLC v. Meta Platforms, Inc.*, Case No. 6:21-cv-00896-ADA (W.D. Tex.) (filed June 30, 2022)
1015	Declaration of Sylvia D. Hall-Ellis, Ph.D. ("Hall-Ellis")
1016	Proof of Service of Complaint

I. MANDATORY NOTICES UNDER §42.8(A)(1)

A. Real Party-In-Interest under §42.8.(b)(1)

Meta Platforms, Inc. is the real party-in-interest to this IPR petition.

B. Related Matters under §42.8(b)(2)

The '582 patent is the subject of pending litigation involving Petitioner: *AlmondNet, Inc. and Intent IQ, LLC v. Meta Platforms, Inc.*, Case No. 6:21-cv-00896-ADA (W.D. Tex.). Petitioner was first served on September 2, 2021. (EX1016.) The '582 patent is also the subject of other pending litigations:

- *AlmondNet, Inc. v. Microsoft Corporation*, 6-21-cv-00897 (W.D. Tex.)
- *AlmondNet, Inc. v. Amazon.com, Inc.*, 6-21-cv-00898 (W.D. Tex.)
- *AlmondNet, Inc. v. Samsung Electronics Co.*, 6-21-cv-00891 (W.D. Tex.)
- *AlmondNet, Inc. v. Roku, Inc.*, 6-21-cv-00876 (W.D. Tex.)

The '582 patent was also subject to previous litigation in *AlmondNet, Inc. v. Oath Holdings Inc.*, 1-19-cv-00247 (D. Del.), which was terminated in March 2019.

The '582 patent is also the subject of an IPR proceeding recently filed by third parties Samsung Electronics Co. and Microsoft Corporation: *Samsung Electronics Co. v. AlmondNet, Inc.*, Case No. IPR2022-01260. (*See* IPR2022-01260, Paper 3 (July 19, 2022).) Petitioner had no involvement in the Samsung/Microsoft petition.

The '582 patent was also the subject of a petition for CBM review filed by third party Yahoo! several years ago, *Yahoo! Inc. v. AlmondNet, Inc.*, Case No.

CBM2017-00052, in which institution was denied. (*See* CBM2017-00052, Paper 7 (November 28, 2017).) Petitioner had no involvement in the Yahoo! petition.

C. Lead and Back-Up Counsel under §42.8(b)(3)

Petitioner provides the following designation of counsel.

LEAD COUNSEL	BACK-UP COUNSEL
Heidi L. Keefe (Reg. No. 40,673) hkeefe@cooley.com COOLEY LLP ATTN: Patent Group 1299 Pennsylvania Ave. NW, Suite 700 Washington, DC 20004 Tel: (650) 843-5001 Fax: (650) 849-7400	Phillip E. Morton (Reg. No. 57,835) pmorton@cooley.com COOLEY LLP ATTN: Patent Group 1299 Pennsylvania Ave. NW, Suite 700 Washington D.C. 20004 Tel: (202) 728-7055 Fax: (202) 842-7899
	Andrew C. Mace (Reg. No. 63,342) amace@cooley.com COOLEY LLP ATTN: Patent Group 1299 Pennsylvania Ave. NW, Suite 700 Washington D.C. 20004 Tel: (650) 843-5287 Fax: (650) 849-7400
	Mark R. Weinstein (Admission *pro hac vice* to be requested) mweinstein@cooley.com COOLEY LLP ATTN: Patent Group 1299 Pennsylvania Avenue NW Suite 700 Washington D.C. 20004 Tel: (650) 843-5007 Fax: (650) 849-7400

D. Service Information

This Petition is being served by Federal Express to the attorney of record for the ’582 patent, Louis J. Hoffman, P.C., 7689 East Paradise Lane, Suite 2, Scottsdale, AZ 85260. Petitioner consents to electronic service at the addresses provided above for lead and back-up counsel.

II. FEE PAYMENT

Petitioner requests review of 7 claims, with a $41,500 payment.

III. REQUIREMENTS UNDER §§ 42.104 AND 42.108 AND CONSIDERATIONS UNDER §§ 314(A) AND 325(D)

A. Grounds for Standing

Petitioner certifies that the ’582 patent is available for IPR and that Petitioner is not barred or otherwise estopped.

B. Identification of Challenge and Statement of Precise Relief Requested

Petitioner requests IPR institution based on:

Ground	Claims	Basis for Challenge under §103
1	11, 13-15, 19-20	Obvious over Rosenberg (EX1003) in view of Zeff (EX1004) and Sterne (EX1005)
2	16	Obvious over Rosenberg in view of Zeff and Sterne, in further view of Farber (EX1006)
3	11, 13-15, 19-20	Obvious over Ground 1 Prior Art (Rosenberg, Zeff, Sterne) in further view of Merriman (EX1008)
4	16	Obvious over Ground 2 Prior Art (Rosenberg, Zeff, Sterne, and Farber) in further view of Merriman

Submitted with this Petition is the Declaration of Christopher M. Schmandt

(**EX1002**) ("Schmandt"), a qualified technical expert. (Schmandt, ¶¶1-7, Ex. A.)

C. Considerations Under §§ 314(a) and 325(d)

§314(a): The *General Plastic* factors do not warrant discretionary denial. As noted in **Part I.B**, another IPR petition against the '582 patent was recently filed by Samsung/Microsoft (IPR2022-01260), but Petitioner had no involvement in the preparation or filing of that petition. The Samsung/Microsoft petition also relies on entirely different prior art.[1] No Patent Owner Preliminary Response (POPR) has been filed. As also noted in **Part I.B**, a petition for Covered Business Method (CBM) review was filed by Yahoo! (CBM2017-00052), in which institution was denied. Petitioner had no involvement in the Yahoo! CBM, which was based on subject matter eligibility under § 101 and not prior art invalidity under § 103.

Nor do the *Fintiv* factors warrant discretionary denial. The pending litigation is in early stages; no claim construction rulings and no significant discovery have occurred. A trial date has been set for August 21, 2023, but Petitioner intends to move to stay pending any instituted IPR. Petitioner further represents that it will not

[1] The Samsung/Microsoft IPR petition cites U.S. Patent No. 5,948,061 to Dwight Merriman, whereas **Grounds 3-4** here cite 8,566,154 B2 (EX1008), also to Dwight Merriman. Although both patents list the same lead inventor, they are unrelated patents from separate patent families containing different disclosures.

pursue invalidity in the pending litigation based on any ground in this proceeding, or any grounds that could reasonably have been raised before the PTAB.

§325(d): None of the prior art references cited in the Grounds (listed in **Part III.B** above) was cited or considered during prosecution of the '582 patent.

IV. OVERVIEW OF THE '582 PATENT

A. Level of Ordinary Skill in the Art

A person of ordinary skill in the art would have possessed a bachelor's degree in electrical engineering or computer science, and two years of work experience in the field of network-based computer systems, such as systems for sending and receiving information over local networks and wide area networks (such as the Internet or World Wide Web). A person could also have qualified with more formal education and less technical experience, or vice versa. (Schmandt, ¶¶10-14.)

B. Specification Overview

The '582 patent states that it "generally relates to a descriptive-mercantile method, for use at a juncture in a data-communications topology having associated therewith a maintained databank of partial profiles." ('582, 3:30-33.) The '582 patent asserts that an Internet website may make more profit from a visitor to the site if the website were to "know more about the visitor." ('582, 3:67-4:2, 1:45-56.)

The '582 patent's method for a website to "know more about the visitor" involves a website forwarding a "partial profile" of a visitor to another server. ('582,

4:2-5; *see also id.*, 2:36-57 (describing exemplary types of profile information).) The website also redirects the visitor to that server to access cookie information previously placed on the user's computer identifying the user. The server can then aggregate and "interconnect" the user's transactions (reflected in a partial profile) across websites. ('582, 4:2-11, 15:40-48.)

V. CLAIM CONSTRUCTION

Petitioner does not believe an express claim construction is necessary at this time for this IPR. Certain terms of the '582 patent have been the subject of various proposed constructions in pending litigation. (Schmandt, ¶37.) It is unnecessary for the Board to resolve those issues because, as demonstrated below, the prior art discloses and renders obvious the challenged claims under any of the proposed constructions or under any reasonable construction. (*Id.*)

VI. THE CHALLENGED CLAIMS ARE UNPATENTABLE

A. Overview of Grounds

The challenged claims attempt to lay claim to targeted advertising services that were well-known and commercially available to millions of users long before the '582 patent. These services sought to improve the accuracy of targeted advertising by storing profile information about a user (such as demographic information and user preferences) in a centralized database or repository accessible to multiple third-party websites. (Schmandt, ¶40.) These third-party websites could,

in turn, obtain this profile information from the centralized database and use it to target advertisements. (*Id.*) One such service, known as the "Firefly Passport" system, had more than a million registered users by 1996. (*Id.* (quoting EX1004, pp.0058-0058 & EX1005, pp.00172).)

All of the proposed grounds rely primarily on **Rosenberg** (EX1003), which describes a system similar to the Firefly Passport system for storing user profile information in a centralized database and making it available to multiple third-party websites for use in delivering targeted content to users. (Schmandt, ¶¶42, 50-51.) The proposed grounds combine Rosenberg with **Zeff** (EX1004) and **Sterne** (EX1005), which describe details about the Firefly Passport system, primarily for the "**unaffiliated third parties**" limitation of claim 11(a) and the requirement that profile information be used "**in targeting third-party advertisements**," as recited in claim 11(e). (Schmandt, ¶¶108-110, 131-132.)

Ground 2 adds **Farber** (EX1006) solely for dependent claim 16. (Schmandt, ¶¶151-165.) **Grounds 3-4** add **Merriman** (EX1008) in the event Patent Owner argues for a narrow (but unwarranted) construction of claim 11(a) requiring that the claimed "**partial profile**" be received in real-time while a user is currently accessing a website. (Schmandt, ¶¶166-179.)

Each of these references qualifies as prior art to the '582 patent. Rosenberg and Farber qualify as prior art under at least § 102(e) (pre-AIA). (Schmandt, ¶¶41,

53.) Zeff and Sterne qualify as prior art printed publications under § 102(b), as evidenced by their public library availability. (Hall-Ellis Decl., EX1015, ¶¶38-52.)[2]

Merriman qualifies as prior art under § 102(e) because it issued from an application that claims priority as a direct continuation of an application filed on July 27, 1999. The disclosures of Merriman (EX1008) and the parent application to which it claims priority (EX1009) are substantially identical. (EX1010; Schmandt, ¶62.) Merriman is thus entitled to a § 102(e) date of no later than July 27, 1999.[3]

---

[2] Petitioner has also cited to Brown (EX1006) below for background information about HTML and to describe knowledge that any ordinarily skilled artisan would have possessed. (Schmandt, ¶¶97-98.) Brown also qualifies as a prior art printed publication. (Hall-Ellis Decl., EX1015, ¶¶54-61.)

[3] Merriman also claims priority to a provisional application filed on August 3, 1998 (EX1011). In the unlikely event Patent Owner attempts to "swear behind" the July 27, 1999 filing date of Merriman, Petitioner reserves the right to rely on Merriman's provisional filing. The provisional includes all disclosures relied upon by Petitioner from Merriman and meets all requirements for Merriman to be considered prior art as of its provisional filing date. (Schmandt, ¶¶69-74; EX1012.)

B. Ground 1: Claims 11, 13-15, 19-20 Are Obvious Over Rosenberg in View of Zeff and Sterne

1. Claim 11

The preamble recites "[**a**] **tangible, non-transitory data storage medium comprising indicia of instructions for a processor to perform a method of collecting profiles of Internet-using entities, the method comprising**…." Assuming the preamble imposes a limitation, the prior art discloses it.

Rosenberg discloses the claimed "**method of collecting profiles of Internet-using entities**." Figure 1 provides an illustration of computer network **20** showing the primary components of the Rosenberg system, to which Petitioner will refer throughout its discussion of Rosenberg throughout this Petition:

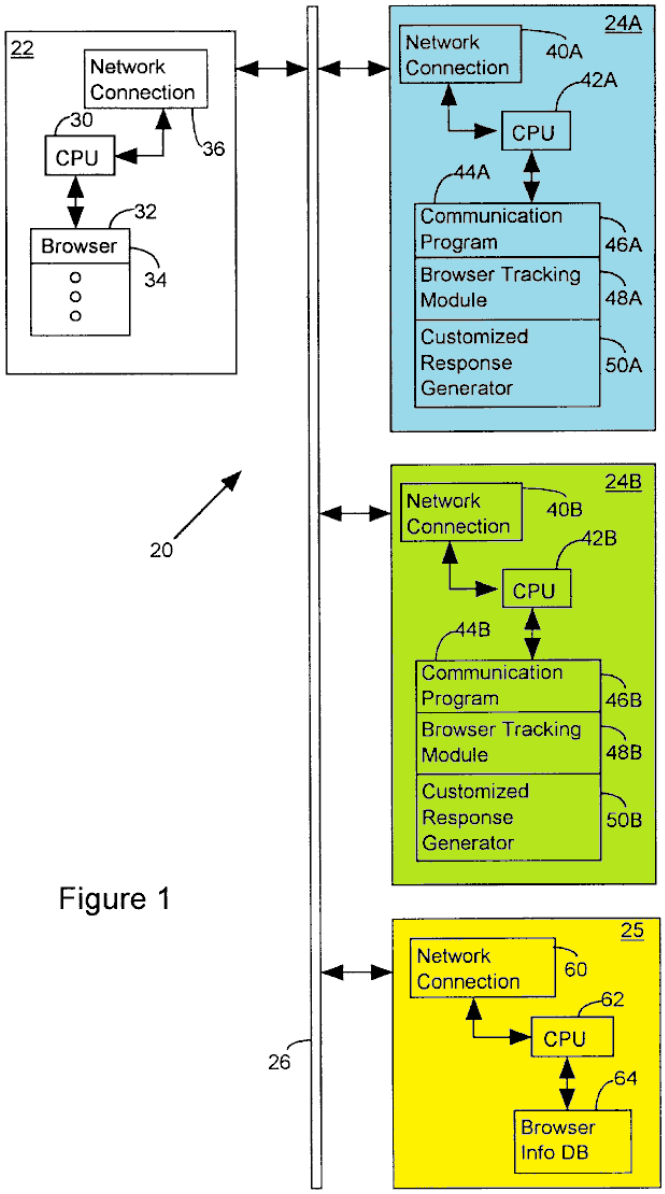

Figure 1

(Rosenberg, Fig. 1 (highlighting added).) Figure 1 shows computer network **20** which "may be considered as a simplified representation of the WWW. The network **20** includes at least one client computer **22** and at least one server computer **24**." (Rosenberg, 4:1-4.) Network **20** would have included the Internet. (Schmandt, ¶77.)

The key components in Figure 1 for purposes of this Petition are the three servers shown in color highlighting, *i.e.* server **24A**, server **24B**, and database server

25. For purposes of clarity, therefore, Petitioner will retain this highlighting throughout this Petition when identifying these components from Rosenberg.

The "**Internet-using entities**" for claim 11 correspond in Rosenberg to users who access the Internet using web browsers on client computers. Rosenberg describes client computer **22** as "a standard computer," which as shown, includes a network connection **36**, CPU **30**, and web browser **34**. (Rosenberg, 4:7-10.) "As known in the art, a web browser is used to communicate with remote server computers **24** and to visually present the information received from such computers." (Rosenberg, 4:11-13.) Although Figure 1 shows only one client computer **22**, multiple client computers could be used. (Rosenberg, *e.g.*, 4:2-3; Schmandt, ¶79.) It would have been obvious that the system of Rosenberg could have been adapted for use with multiple users (and thus multiple "**Internet-using entities**"), each using its own client computer. (Schmandt, ¶79.)

Rosenberg also discloses "**collecting profiles of Internet-using entities**," the profiles corresponding to information about users collected at database server **25**. As shown below, database server **25** collects two types of user profile information: **(1)** tracked user activity and **(2)** demographic information. (Schmandt, ¶¶80-83.)

With respect to **(1)**, database server **25** collects tracking information about each user from each individual server **24**, such as the types of information the user requested while visiting that server **24**. Figure 3 of Rosenberg (below) shows a

simplified example of tracking information stored at database server **25**:

Cookie ID #	Last Visit to Server_A	Content Requested			Last Visit to Server_B	Content Requested		
		News	Product Info	Feature Story		News	Product Info	Feature Story
123	4-9-96;18:25	2	5	0	7-4-96;16:23	1	7	3

Figure 3

(Rosenberg, Fig. 3 (highlighting added), 5:55-57, 6:6-7.) The first column (Cookie ID #) corresponds to a unique identification number for a user, in this case "123." (Rosenberg, 5:63-65.) Rosenberg explains that each user (via its web browser) is assigned a unique identification value (referred to as "i") used to store information about the user in database server **25**. (Rosenberg, 5:8-16, 5:63-65.) Figure 3 also shows entries reflecting the last visit of this user to Server_A (**24**A) and Server_B (**24**B). (Rosenberg, 5:65-6:5.) Rosenberg explains that database server **25** typically obtains this tracking information from access logs of each server computer **24**, *i.e.* Server_A **24**A and Server_B **24**B in the example above. (Rosenberg, 5:57-59, 6:59-62, 7:7-9.) Rosenberg therefore discloses "**collecting profiles of Internet-using entities**," with the profiles taking the form of database records collected at database server **25** recording previous activities of users on websites.

With respect to **(2)**, database server **25** is not limited collecting user <u>tracking</u> information – it can also collect and store <u>demographic</u> information about the user. (Rosenberg, *e.g.*, 3:30-37, 7:19-40; Schmandt, ¶82.) Rosenberg therefore discloses collected "**profiles of Internet-using entities**" at database server **25** that can also

include user demographic information.

Petitioner notes that the mapping of "**profiles**" to previous activities and demographic information of users is consistent with the '582 patent. ('582, 2:36-38, 2:38-43.) The '582 patent explains, for example, that a profile can contain "demographic attributes" or "behavioral attributes." ('582, 11:7-9.) The profiles in Rosenberg contain both types of attributes as explained. (Schmandt, ¶83.)

Rosenberg also discloses and renders obvious a "**tangible, non-transitory data storage medium comprising indicia of instructions for a processor to perform**" the above-described method of collecting profiles of Internet-using entities. The "**tangible, non-transitory data storage medium**" corresponds to memory within database server **25** storing computer programs as disclosed in Rosenberg. (Rosenberg, 4:47-51; Schmandt, ¶84.) The "**indicia of instructions**" thus take the form of the program instructions that, when executed by a processor of database server **25**, perform the method of collecting profiles of Internet-using entities. Those instructions also carry out each step of claim 11 as described in detail in the analysis of the claim limitations below. (Schmandt, ¶84,)

Petitioner notes that the full scope of "**<u>indicia</u> of instructions**" is unclear, for example, whether this term also encompasses something beyond the instructions themselves. Petitioner has taken an indefiniteness position in the pending litigation with respect to the full scope of this term. But this ambiguity does not prevent the

Board from applying the prior art, because "**indicia of instructions**" includes *at least* the instructions themselves, and as noted, it would have been apparent and obvious that the computer programs executing at database server **25** would have included such instructions performed by a processor. (Schmandt, ¶¶84-85.)

a. "electronically receiving at a programmed computer system coupled to a global computer network, from at least one server controlled by one of a plurality of unaffiliated third parties, a partial profile of an entity that uses a user computer coupled to the global computer network and accessing a website, which partial profile is available to one of the third parties and contains at least one profile attribute related to the entity, and automatically with the computer system storing the received partial profile;"

Many aspects of claim 11(a) were covered in the discussion of the preamble above. For purposes of clarity, the table below summarizes how Petitioner has mapped the elements of claim 11(a) to the disclosures of Rosenberg:

Claim Limitation	Summary of Disclosures from Rosenberg
"a programmed computer system coupled to a global computer network"	Database server **25** (Fig. 1) which is coupled to the Internet and programmed to carry out the claimed steps
"at least one server controlled by one of a plurality of unaffiliated third parties"	Server_B **24B** (Fig. 1), which is owned and controlled by an entity that is a third party to and unaffiliated with the entity that owns and controls database server **25**
"a plurality of unaffiliated third parties"	Parties that own and operate at least Server_A **24A** and Server_B **24B**, each of which is a third party

Claim Limitation	Summary of Disclosures from Rosenberg
	to and unaffiliated with the party that owns and controls database server **25**
"a partial profile of an entity that uses a user computer coupled to the global computer network"	Tracking information about content requested by a user who is accessing Server_B **24**B, via the web browser on its client computer connected to the Internet

(Schmandt, ¶86.) These components are readily illustrated by reference, again, to the highlighted version of Figure 1 from Rosenberg discussed for the preamble:

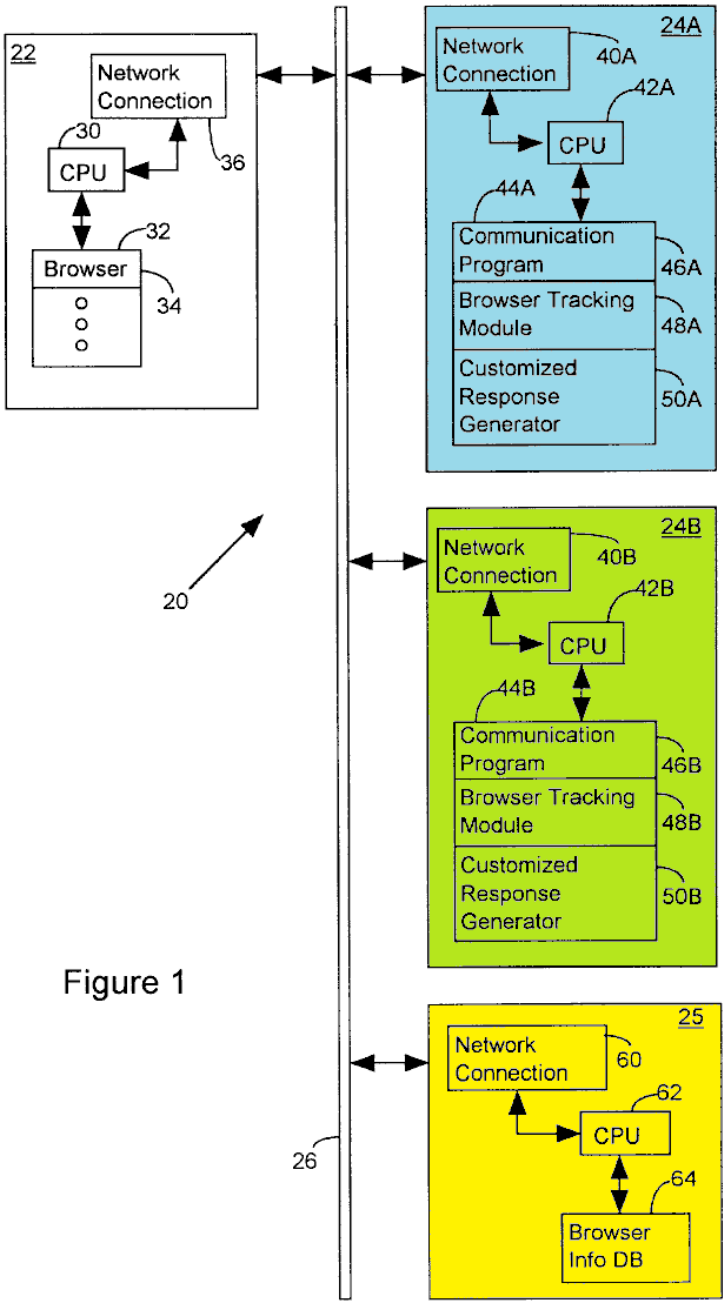

Figure 1

(Rosenberg, Fig. 1 (highlighting added).) For purposes of claim 11, the claimed "**programmed computer system coupled to a global computer network**" corresponds to database server **25**, which is coupled to network **20** as shown in Figure 1 of Rosenberg. As noted, "[t]he computer network **20** may be considered as

a simplified representation of the WWW." (Rosenberg, 4:1-3.) An ordinarily skilled artisan would have understood and found it obvious that network **20**, which represents the World Wide Web (WWW), would have included the Internet (a "**global computer network**"). (Schmandt, ¶¶44, 77, 87.) Database server **25** is also a "**programmed computer system**" because, as explained, it includes computer programs with instructions to carry out its functions. (Schmandt, ¶84.)

Rosenberg also discloses "**at least one server controlled by one of a plurality of unaffiliated third parties**," with the "**plurality of unaffiliated third parties**" corresponding to the parties that own and control at least Server_A **24**A and Server_B **24**B. Rosenberg confirms that database server **25** can be implemented as depicted in Figure 1, *i.e.*, using a computer separate from Server_A **24**A and Server_B **24**B. (Rosenberg, 4:19-20.) Rosenberg does not disclose the commercial and/or contractual relationship that exists, if any, between the parties controlling database server **25**, Server_A **24**A and Server_B **24**B. But it would have been obvious that these computers could each have been owned and controlled by "**unaffiliated third parties**," a topic that Petitioner will cover in detail in a separate discussion below. (Schmandt, ¶¶88, 106-115.)

For purposes of claim 11, the "**at least one server controlled by one of a plurality of unaffiliated third parties**" corresponds in Rosenberg to Server_B **24**B. As noted, Petitioner will provide a separate discussion below as to why it would

have been obvious for it to have been controlled by an unaffiliated third party.

With respect to "**a partial profile of an entity that uses a user computer coupled to the global computer network**," as noted in the discussion of the preamble, the user via its web browser **34** ("**an entity**") is assigned a unique identification value ("i") that is used to store information about the user in database server **25**. (Rosenberg, 5:8-16.) Database server **25** uses this unique identification value to store tracking information about the user from each individual server **24**, such as the types of webpages it requested while visiting such server **24**. (Schmandt, ¶90.) Figure 3 below shows an example of this tracking information:

Cookie ID #	Last Visit to Server_A	Content Requested			Last Visit to Server_B	Content Requested		
		News	Product Info	Feature Story		News	Product Info	Feature Story
123	4-9-96;18:25	2	5	0	7-4-96;16:23	1	7	3

Figure 3

(Rosenberg, Fig. 3 (highlighting added), 5:55-57.) The first column (Cookie ID #) corresponds to the above-mentioned unique identification value for a user who accessed individual servers **34** through a web browser ("**an entity**"). (Rosenberg, 5:63-65.) Figure 3 also shows entries reflecting pages requested by the user during its last visit to Server_A **24**A and Server_B **24**B. (Rosenberg, 5:65-6:5.) Because the claimed "**at least one server**" for our purposes corresponds to Server_B **24**B, green highlighting in Figure 3 shows tracking information received by database server **25** from that server. In this case, the user (identified by Cookie ID #123)

requested one page of news, seven pages of product information, and three pages of feature stories, during its last visit to Server_B **24**B. (Schmandt, ¶90.) This tracking information is typically obtained from access logs of each server computer **24**. (Rosenberg, 5:57-59.) "This information is then passed from the access logs of the server computers **24** to the database **25**, typically at the end of a day or at other times when network traffic is light." (Rosenberg, 6:59-62; *see also id.*, 7:7-9.)

Rosenberg therefore discloses **"electronically receiving at a programmed computer system coupled to a global computer network**," *i.e.* electronically receiving at database server **25** coupled to the Internet, "**from at least one server controlled by one of a plurality of unaffiliated third parties**," *i.e.* from at least Server_B **24**B, "**a partial profile of an entity that uses a user computer coupled to the global computer network**," *i.e.*, user tracking information about content requested by a user of Server_B **24**B who uses a user computer coupled to the Internet. In the example of Figure 3 above, as noted, the tracking information shows that the user last visited the Server_B **24**B website on July 4, 1996 at 4:23pm, and requested one news page, seven product information pages, and three feature story pages. (Rosenberg, Fig. 3, 5:66-6:5; Schmandt, ¶¶90-92.)

The tracking information about user activity from Server_B **24**B qualifies as "**a partial profile of an entity**" because it provides a portion of the attributes for a user, *i.e.*, the user's activity when accessing Server_B **24**B. The '582 patent itself

explains that "[i]n the context of the preferred embodiment of the present invention, all profiles are, by definition, partial." ('582, 7:43-44.) The user activity received from Server_B **24B** forms only part of the profile information about the user maintained by database server **25**. As Figure 3 shows above, the user profile at database server **25** also maintains records of the user's activity at *other* servers (such as Server_A **24A**), and as noted above, the profile can also store demographic information about the user as noted above. (Rosenberg, 7:22-29, Fig. 7.) As explained in the discussion of the preamble, the user tracking information received by database server **25** qualifies as "**profile**" information. (Schmandt, ¶¶93, 83.)

Rosenberg also discloses "**automatically with the computer system storing the received partial profile**," as recited at the end of claim 11(a). The received partial profile, as explained, is automatically received and stored by database server **25** ("**the computer system**"). Nothing in Rosenberg suggests any manual user involvement in storage of the received partial profile. (Schmandt, ¶94.) To the contrary, collection of partial profile information by database server **25** can occur at scheduled intervals or when network traffic is light, which would have indicated to an ordinarily skilled artisan that collection and storage are automated. (Rosenberg, 5:59-62, 7:7-9; Schmandt, ¶94.) It would have also been obvious that the partial profile could have been automatically received by database server **25** during user access, for example, "when network traffic is light." (Rosenberg, 5:59-62.)

Claim 11 also recites receiving "**a partial profile of an entity that uses a user computer coupled to the global computer network <u>and accessing a website</u>**." Claim 11(a) does not require that "**a website**" be the same website or server from which the "**partial profile of an entity**" was received. In this case, Petitioner has mapped "**a website**" in Rosenberg to a website provided by Server_A **24**A, which contains a standard HTML reference to a URL of a webpage on Server_B **24**B, discussed in more detail below.

Rosenberg explains that browser tracking module **48**A within Server_A **24**A inserts, into a webpage of the website, a URL to Server_B **24**B. (Rosenberg, 7:62-8:24.) In one embodiment, Rosenberg uses a well-known and standard HTML technology known as "frames" that allows a single webpage to simultaneously present the contents of multiple different HTML documents or webpages.

As was well-known, "HTML frames create independently changeable and (sometimes) scrollable windows that tile together to break up and organize a display so that it's not only more visually appealing, but easier to work with." (Mark Brown, *Special Edition Using HTML 3.2* (3d ed. 1997) ("Brown") (**EX1006**)); Schmandt, ¶97.) Brown, which Petitioner has cited to describe basic HTML knowledge that any ordinarily skilled artisan would have possessed, shows a simple exemplary webpage with two frames:

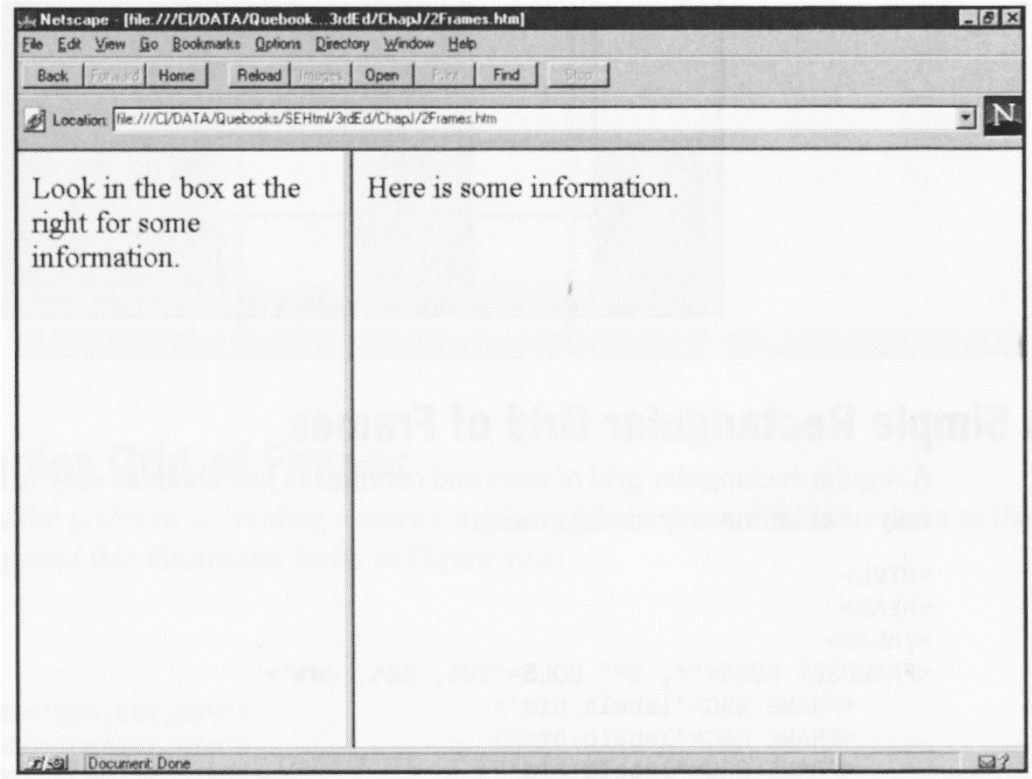

(Brown, Fig. 10.5, p.0049.) The exemplary webpage shown in Figure 10.5 of Brown, shown above, was created using the following HTML code:

```
<HTML>
<HEAD>
</HEAD>
<FRAMESET COLS="*, 2*">
     <FRAME SRC="label.htm">
     <FRAME SRC="info.htm">
</FRAMESET>
</HTML>
```

(Brown, p.0049.) The exemplary HTML from Brown above would have been familiar to anyone with even an introductory understanding of HTML and web programming. (Schmandt, ¶97.) The <FRAMESET COLS> attribute specifies that the page will be divided into frames with two columns, the first column consuming

1/3 of the window, and the other column consuming the remaining 2/3, as reflected in the page in Figure 10.5 above. (*Id.*; Brown, p.0049.)

Each of two <FRAME SRC> attributes represents what Brown calls "the most important FRAME attribute," because each "defines the URL of the content of your frame." (Brown, p. 0047.) In this case, "label.htm" will be displayed in the left frame, and "info.htm" will be displayed in the right frame. (Schmandt, ¶¶97-98; Brown, p.0049.) Because these are *relative* rather than *absolute* URLs (*e.g.* they do not contain "http://"), they point to files on the same web server that is serving the HTML for webpage listed above. (Schmandt, ¶98.)

But Brown makes clear that, "[o]f course, SRC can point to any valid URL." (Brown, p.0047.) The <FRAME SRC> attribute can therefore point to a URL for a completely different web server identified by a URL beginning with "http://". (Schmandt, ¶98; Brown, p.0047 ("If, for example, you wanted your frame to display a GIF image that was located somewhere in Timbuktu, your FRAME might look like the following: <FRAME SRC="http://www.timbuktu.com/budda.gif">").)

With this understanding of HTML frames, we turn back to Rosenberg, in which Server_A **24**A uses this standard HTML frame technique to create a two-column webpage remarkably similar to the one in Brown displaying content from the websites at Server_A **24**A and Server_B **24**B:

An HTML cross-site reference with a frame tag may also be used. With

> this method, the page contains frames, one of which references a page on another site. For example,
>
> ```
> <FRAMESET COLS="1,2">
> <FRAME SRC= "http://www.search.com/cnet.cgi?3676778">
> <FRAME SRC=column2.html">
> </FRAME>
> ```
>
> An advantage of this approach is that the request will be made automatically, without the need for human action.

(Rosenberg, 8:56-65.) The HTML above represents a webpage provided by Server_A **24**A. (Rosenberg, 7:62-64 ("As indicated above, the browser tracking module **48**A of server computer **24**A is used to set a cookie <u>and return a page to a client computer **22**</u>.").) It is similar to the example from Figure 10.5 of Brown; the page includes an HTML <FRAMESET COLS> attribute that tells the browser to organize the page into two columns of relative lengths, with the left column consuming 1/3 of the window and the right column consuming the remaining 2/3 (*i.e.*, "COLS='1, 2'"). (Schmandt, ¶99; Brown, p.0049 & Fig. 10.5.)

The first <FRAME SRC> attribute specifies that the left frame will contain a page from a website at <http://www.search.com/cnet.cgi?3676778>, which corresponds to a page from another website at a different server, *i.e.*, from Server_B **24**B. (Rosenberg, 8:12-15 ("The browser tracking module **48** [of server **24**A] creates a page and embeds within it HTML that references a specific URL on another server computer, <u>say server computer B **24**B</u>…."), 8:56-58 ("With this method, the page contains frames, <u>one of which references a page on another site</u>.") (emphasis

added).)[4] The second <FRAME SRC> attribute above indicates that the right frame will contain a page from Server_A **24A** (*i.e.*, the HTML file "column2.html").

Petitioner's expert created the following mock-up to illustrate how the webpage described in Rosenberg would have appeared within in a web browser based on the exemplary HTML from Rosenberg above:

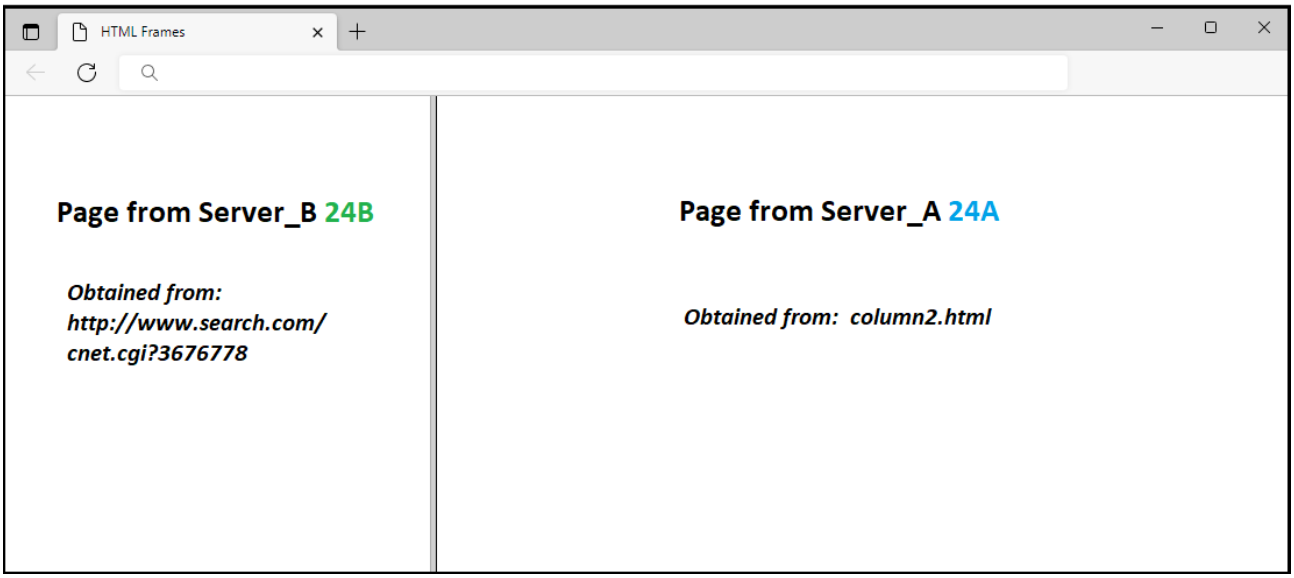

(Schmandt, ¶99.) As shown, the frame-creating HTML from Rosenberg describes a page from a website provided by Server_A **24A** showing (1) in the right frame, a webpage from Server_B **24A** (from "column2.html"), and (2) in the left frame, a webpage from Server_B **24B** (from "http://www.search.com/cgi?3676778"). (Rosenberg, 8:56-58.) Because the frames hold two separate HTML webpages, each

[4] Except as otherwise noted, all undermining and emphasis from quotations in the prior art was added by Petitioner for emphasis.

webpage would have been fully and independently functional, simultaneously displayed to the user in the same browser window, and each webpage would have behaved in the same way as if it were displayed in a separate window in the web browser. (Schmandt, ¶99; Brown, p.0040.)

Rosenberg thus discloses receiving "**a partial profile of an entity that uses a user computer coupled to the global computer network <u>and accessing a website</u>**." The "**partial profile**," as noted, corresponds to tracking information about user activity received from Server_B **24B** based on content requested from that server. (Schmandt, ¶¶90-92.) Although the "**partial profile**" contains tracking information about user activity for Server_B **24B**, it was received by database server **25** while the user was <u>also</u> accessing the website of Server_A **24A** ("**and accessing a website**"). This is because the Server_A **24A** website was accessed by and visible to the user in a frame within the same web browser window as the Server_B **24B** website. (Schmandt, ¶¶99-100.)

As noted, claim 11(a) does not require that "**a website**" be the same website or server from which the "**partial profile**" was derived or received. (Schmandt, ¶95.) Under the proposed combination, although the user in Rosenberg is <u>also</u> accessing Server_B **24B** and thereby generating new user activity information ("**partial profile**") by requesting content from that server, the user is continuing to access the Server_A **24A** website ("**accessing a website**") because that website

remains simultaneously visible and active within a frame of the same web browser window. (Schmandt, ¶100.) Rosenberg therefore discloses receiving the "**partial profile**" of a user who is accessing the website of Server_A **24A** over the Internet.

Rosenberg also discloses that the "**partial profile is <u>available</u> to one of the third parties and contains at least one profile attribute related to the entity**." Rosenberg explains that the user profile maintained by database server **25** is available to multiple servers including Server_A **24A** and Server_B **24B**, and thus, available to at least "**one of the third parties**." For example, Figure 6 shows an embodiment in which database server **25** sends a user profile to Server_B **24B** to enable Server_B **24B** to create a customized page. (Rosenberg, 6:59-67, Fig. 6.)

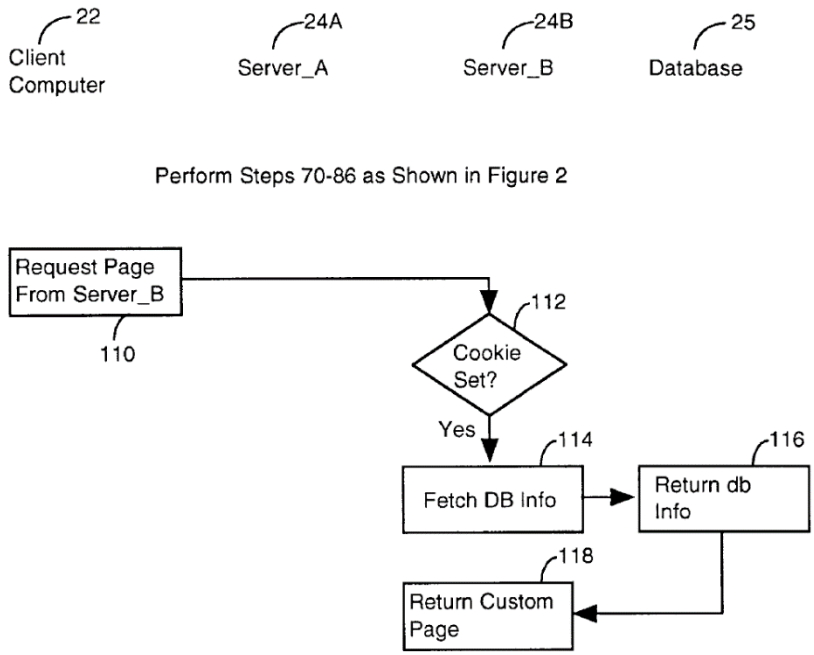

Figure 6

(Rosenberg, Fig. 6.) Figure 6 shows the process performed when a user requests a

page of information from Server_B **24**B, in this case, after completion of steps 70-86 of Figure 2 (as indicated above). (Rosenberg, 6:61-62, Fig. 2 (Steps 70-86).) Petitioner will discuss the process of Figure 2 referenced in Figure 6 in the explanation accompanying claim 11(b) below. For purposes of claim 11(a), the key feature is the fact that information from database **25** – including the partial profile of the user – is available and provided to Server_B **24**B.

Figure 6 shows "processing steps that can be used to generate a response that is customized for the browser requesting the page of information." (Rosenberg, 6:59-61.) Step **112** determines that a cookie has been set for Server_B **24**B, which is "followed by the step of server B fetching information from the database **25** that is particular to this browser **34**." (Rosenberg, 6:65-67.) This information includes the profile information discussed above, which includes user activity with respect to previous website visits and demographic information. (Rosenberg, 5:55-6:9, 7:1-9, 7:19-22.) This information is then retrieved and provided to Server_B **24**B, as shown in Steps **114** and **116** above. As Rosenberg explains, "[t]he browser information database program **64**," which is part of database server **25**, obtains the profile information from the database and "passes this information back to server **24**B (step **116**). Server **24**B interprets this information and return[s] a customized page to the client computer **22** (step **118**)." (Rosenberg, 7:10-13.)

Rosenberg therefore discloses that the "**partial profile is available to one of**

the third parties," in this example the party that operates Server_B **24B**, because that information is electronically accessible to that server. (Schmandt, ¶103.) As explained in detail for claim 11(e) below, Rosenberg further discloses that the partial profile may then be used by the server to generate customized (targeted) information for the user. (Schmandt, ¶¶129-132; Rosenberg, *e.g.*, 7:13-17.)

Figure 6 shows the profile information for the user being made available to Server_B **24B**, but this is merely an example. Rosenberg makes clear that the techniques in Figure 6 would have been equally applicable for sharing profile information with Server_A **24A**, or any other cooperating server in which a cookie has been stored with the unique identifier. (Rosenberg, 7:51-55.) The partial profile would thus also have been available to Server_A **24A**. (Schmandt, ¶104.)

Finally, Petitioner notes that the claim recites that the "**partial profile is available to one of the third parties and contains at least one profile attribute related to the entity**," whereas in Rosenberg, the complete profile for the user maintained by database server **25**, including activity with respect to previous visits and demographic information, is provided to one of the third parties. This nevertheless satisfies the limitation because the complete profile information made available by database server **25** would have included *at least* the received partial profile information. (Schmandt, ¶105; '582, 7:43-44 ("In the context of the preferred embodiment of the present invention, all profiles are, by definition, partial.").)

"Unaffiliated Third Parties"

As noted above, it would have been obvious that the parties that own and control Server_A **24**A and Server_B **24**B would have been "**unaffiliated third parties**." This term is currently the subject of a claim construction dispute in the pending litigation. Patent Owner contends that this term means "*a party not having common ownership with the party or parties that control said programmed computer system*." (EX1014 at 0013.) Petitioner generally agrees with Patent Owner's definition with respect to "**third parties**," but contends that "**unaffiliated**" is indefinite because the full extent of the relationship or connection that can exist between the "**programmed computer system**" and the "**third parties**" (beyond a lack of common ownership and/or control) is unclear. (*Id*.) But this issue presents no issue to applying the prior art here, as explained below.

As the proposed constructions above indicate, Patent Owner and Petitioner agree that the "**unaffiliated third parties**" must be unaffiliated third parties with respect to the party or parties controlling the claimed "**programmed computer system**." In the context of Rosenberg, this means that the party or parties operating the individual servers **24** in Rosenberg, including Server_A **24**A and Server_B **24**B, must be "**unaffiliated third parties**" with respect to database server **25**.

As explained below, this would have been obvious based on Rosenberg in view of **Zeff** (EX1004) and **Sterne** (EX1005). And further explained below, the

potential indefiniteness of "**unaffiliated**" does not impact the analysis because, under the proposed combination, the parties that operate the individual servers **24** and database server **25** in Rosenberg can have had a loose and informal relationship satisfying any reasonable construction of "**unaffiliated third parties**."

Zeff and Sterne describe a well-known and commercially-available service called Firefly that is closely analogous to and serves the same purpose as database server **25** of Rosenberg. (Schmandt, ¶¶40, 42, 109.) As Zeff explains, the Firefly system stored a centralized profile for each user, known as a "Passport," that stored demographic and user preference information about the user. (Zeff, pp.0057-0058.) This Passport, in turn, could be shared with any website on the Internet for purposes of targeting advertisements. (*Id.*) As of 1997, websites that supported Firefly Passports included (among others) Yahoo! and America Online (AOL). (*Id.*) Sterne further confirms that Firefly Passports could be used with any participating site, and identifies third-party websites from Starwave (the owner of ESPN Sportszone) as examples. (Schmandt, ¶109 (citing Sterne, pp.00172, 0048-0049, 0089).)

Zeff confirms that "[a]ny site can be enhanced to be a part of the Firefly network" (Zeff, p.0057), and Sterne similarly confirms that Passports "can be used by any site" (Sterne, p.00172). Zeff and Sterne thus confirm that the party that owns and controls the Firefly Passport system (analogous to database server **25** in Rosenberg) would have been a separate party sharing no common ownership with,

and being otherwise unaffiliated with, the parties that own and control the participating third-party websites with which Firefly Passports could be shared.

Rationale and Motivation to Combine (Rosenberg with Zeff and Sterne): It would have been obvious to combine Rosenberg with Zeff and Sterne. (Schmandt, ¶110.) The combination would have predictably resulted in the system of Rosenberg in which the parties that own and control individual servers **24**, including Server_A **24**A and Server_B **24**B ("**unaffiliated third parties**") would have had no common ownership, control, or affiliation with each other, or with the party that owns and controls database server **25** ("**said programmed computer system**"). (*Id.*)

Rosenberg, Zeff, and Sterne are analogous references in the same field of Internet advertising and centralized storage and brokering of user profiles with multiple websites, and would have been reasonably pertinent to a number of problems facing the inventor. (Schmandt, ¶111.) An ordinarily skilled artisan would have more than a reasonable expectation of success in implementing the proposed combination, which was fully enabled. (Schmandt, ¶115.)

An ordinarily skilled artisan would have been motivated to consult Zeff and Sterne when implementing Rosenberg because Firefly was already a commercially-successful and widely-available embodiment of the same type of profile sharing system described in Rosenberg. (Schmandt, ¶112.) Zeff indicates that Firefly had more than a million users and was supported by a number of well-known sites by

1996, which given the nascent state of the Web at that time, would have made Firefly an enormously successful service. (Zeff, pp.0057-0058; Schmandt, ¶113.) The details of the Firefly business model as described in Zeff and Sterne would have motivated an ordinarily skilled artisan to implement Rosenberg such that the parties that own and control servers **24** including Server_A **24A** and Server_B **24B** would have been separate from and unaffiliated with the party that owns and controls database server **25**. This would have beneficially allowed the party that owns and controls database server **25** to operate independently of any particular website, thus enabling it to offer its profile sharing services to a broad range of third-party websites and increasing its prospects for achieving financial success. (Schmandt, ¶112.) Zeff explains that Internet advertising had by 1997 "grown to a $301 million industry, with revenue projections of $5 billion by the year 2000." (Zeff, p.0015.) Zeff and Sterne also provide beneficial teachings about how to protect member privacy in a profile-sharing system such as Rosenberg, thus providing a further motivation to combine Rosenberg with Zeff and Sterne. (Schmandt, ¶113.)

As noted previously, there is a dispute in the litigation regarding "**unaffiliated**," but this presents no obstacle to the proposed combination. The '582 patent indicates that "**unaffiliated**" does not require that "**unaffiliated third parties**" be complete strangers with respect to the "**programmed computer system**." Claim 12, for example, recites that the programmed computer system of

claim 11, "**in accordance with a predetermined arrangement**," identifies a payment amount due to an "**unaffiliated third party**" for using profile information that that third party contributed. ('582, 18:9-20.) Accordingly, although the full scope and extent of "**unaffiliated**" is unclear, it at least permits the type of arrangement recited in claim 12.

Under the proposed combination, it would have been obvious to implement Rosenberg such that the party that owns and controls database server **25** has <u>even less</u> of a connection to and relationship with the parties that own and control servers **24**, including Server_A **24**A and Server_B **24**B, than claim 12 contemplates. In fact, the critical relationship for the Firefly system (which is analogous to database server **25** in Rosenberg) is actually with the <u>*users*</u> who create Passport profiles, as opposed to the third-party websites with which Passports are shared. Zeff explains that users must register with the Firefly system to create a Firefly Passport, must login to the Firefly system to enable their Passports to be shared, and are given various assurances about the privacy of their information (Zeff, pp.0057-0061; *see also id.*, p.0061, Fig. 5.10 ("Firefly regards its members as part of a community built on trust and respect for individual privacy.").) As applied to Rosenberg, it would have been obvious that the system could have been implemented such that the party that owns and controls database server **25** need not have any formal commercial or contractual relationship with the parties or parties that own and control Server_A **24**A and

Server_B **24**B. And even if an ordinarily skilled artisan chose to permit such a relationship (such as a payment arrangement similar to claim 12), this would not have prevented database server **25** and servers **24** from remaining "**unaffiliated**" as such a relationship would have required nothing more than an arms'-length arrangement between unrelated and independent parties. (Schmandt, ¶¶114-115.)

b. "wherein receiving the partial profile is achieved as a result of automatic electronic URL redirection from a portion of a page of the website accessed by the user computer;"

As noted for claim 11(a), "**the partial profile**" refers to user tracking information about content (*e.g.* types of content pages) requested by the user who visited Server_B **24**B using the web browser on its user computer. (Rosenberg, Fig. 3.) Rosenberg further confirms that receipt by database server **25** of this partial profile "**is achieved as a result of automatic electronic URL redirection from a portion of a page of the website accessed by the user computer**."

The "**automatic URL redirection**" in Rosenberg occurs when the web browser is redirected to Server_B **24**B when it encounters the <FRAME SRC> attribute in the webpage provided by Server_A **24**A discussed in claim 11(a), which directs the browser to obtain a webpage from Server_B **24**B at the URL specified in the attribute, *i.e.* <http://www.search.com/cnet.cgi?3676778>. (Schmandt, ¶125.) This qualifies as "**automatic URL redirection**" because the <FRAME SRC> attribute causes the web browser – which is currently accessing the webpage

provided by Server_A **24**A – to contact a server at a different location (Server_B **24**B) to request a webpage from the specified URL. (Rosenberg, 8:56-58, 5:36-38 ("In other words, the browser **34** receives the information from server **24**A. Based upon this information, the browser **34** generates a request to server **24**B…."); *see also* Brown, p.0047.) And as anyone who had used a website with frames would have recognized, the URL redirection in Rosenberg would also have occurred "**automatic**[ally]." (Schmandt, ¶117.) As Rosenberg explains, "[a]n advantage of this approach is that the request will be made automatically, without the need for human action." (Rosenberg, 8:64-65.)

The automatic URL redirection in Rosenberg was also "**from a portion of a page of the website accessed by the user computer**," with the "**portion of a page of the website**" corresponding to a portion of a page of the website provided by Server_A **24**A ("**the website**") accessed by the user computer. As fully described for claim 11(a), the HTML for the page at the Server_A **24**A website includes the <FRAME SRC> attribute that points to the URL for Server_B **24**B. (Schmandt, ¶99; Rosenberg, 8:60-61). This <FRAME SRC> attribute in Rosenberg, which causes the automatic URL redirection of the browser, was thus from "**a portion of a page of the website**" because the attribute was a part of the HTML for a page of the website provided by Server_A **24**A. (Schmandt, ¶118.)

The parties in the pending litigation have provided differing definitions for

"**URL redirection**," but Rosenberg readily satisfies both of those definitions or any other reasonable construction. Patent Owner has argued that "**URL redirection**" refers to "*obtaining certain information for at least a portion of an accessed page / site from a different location*," whereas Petitioner has argued that it means "*obtaining a requested webpage from a different location*." With respect to Petitioner's proposal, the "**URL redirection**" in Rosenberg requests and obtains a complete webpage from a different location, *i.e.* from Server_B **24B** at "http://www.search.com/cnet.cgi?3676778". (Schmandt, ¶¶119, 99.) Rosenberg thus also satisfies Patent Owner's broader construction because the "**URL redirection**" requests and obtains "certain information for *at least a portion* of an accessed page / site from a different location," *i.e.*, by obtaining content of an accessed webpage/site from Server_B **24B** using the URL. (Schmandt, ¶119.)

Finally, receipt of the partial profile from Server_B **24B** was "**achieved as a result of**" the automatic URL redirection discussed above. This is because, in the example above, it was the URL redirection from Server_A **24A** (from the <FRAME SRC> attribute) that caused the user's browser to contact and access the webpage from Server_B **24B** in the first instance. This in turn enabled the user to request news, product information and feature story pages from Server_B **24B** – thus generating the "**partial profile**" as shown in Figure 3. (Rosenberg, Fig. 3.) Because the "**partial profile**" reflects the user's activity when accessing Server_B **24B**, and

that access was facilitated by URL redirection from Server_A **24**A, the receipt of that partial profile was "**achieved as a result of**" the URL redirection.

Rosenberg discloses the "**achieved as a result of**" limitation in another way. As explained, the user activity received at database server **25** is stored based on the unique user identification value, for example, Cookie ID #123 in Figure 3. (Rosenberg, 5:63-65.) In the HTML frames example from Rosenberg in which the user accesses Server_B **24**B by URL redirection from Server_A **24**A via "http://www.search.com/cnet.cgi?**3676778**," that URL causes the web browser to send the user's unique identification value ("3676778") to Server_B **24**B. (Schmandt, ¶123; Rosenberg, 8:48-51, 5:36-38.) Server_B **24**B can then use this unique user identification value to set a cookie for Server_B **24**B using the same value. (Rosenberg, 5:40-49, 8:27-32.)

This unique identification value is critical to Rosenberg because it allows database server **25** to store and retrieve tracking information on a user-by-user basis. This is how, as shown in Figure 3, database server **25** can record tracking activity for the same user for Server_A **24**A and Server_B **24**B. (Schmandt, ¶122.) The ability of Server_B **24**B to send "**partial profile**" information to database server **25** was thus achieved "**as a result of**" the URL redirection, because it was that URL redirection that furnished Server_B **24**B with the user identification value that database server **25** needed in order to receive the "**partial profile**" from Server_B

24B and store it in association with that user. (Rosenberg. Fig. 3, 5:63-65 ("The first column of FIG. 3 specifies a 'cookie ID #', which is the previously discussed unique identification number.").) As explained for claim 11(c) immediately below, this user identification value allows database server **25** to add tracking information obtained from Server_B **24B** to the user's maintained profile. (Schmandt, ¶¶123-126.)

c. "automatically with the computer system electronically adding the received partial profile to a maintained profile believed to be related to the same entity;"

Rosenberg discloses "**a maintained profile**" in the form of a profile at database server **25** about the user (the "**entity**"), which includes information about the user's previous visits to servers **24**, as well as demographic and other information about the user, as explained previously. (Rosenberg, *e.g.*, 3:30-37, 7:1-40, Fig. 7.)

Rosenberg discloses "**electronically adding the received partial profile to a maintained profile**," because the user tracking information received from Server_B **24B** ("**received partial profile**") is added to the maintained profile for the user stored at database server **25**. Referring again to Figure 3:

Cookie ID #	Last Visit to Server_A	Content Requested			Last Visit to Server_B	Content Requested		
		News	Product Info	Feature Story		News	Product Info	Feature Story
123	4-9-96;18:25	2	5	0	7-4-96;16:23	1	7	3

Figure 3

(Rosenberg, Fig. 3 (highlighting added).) Rosenberg explains that "[t]he data structure of FIG. 3 is simplified for the purposes of illustration. A typical data

structure includes entries for previous visits, more specific entries regarding content requests, and additional entries for a large number of servers." (Rosenberg, 6:6-9.) As noted, database server **25** can also store demographic information about the user. (Rosenberg, *e.g.*, 7:19-40, Fig. 7.) The collection of information maintained about a user at database server **25** (including both the user activity and demographic information) discloses "**a maintained profile**" for the user.

Figure 3 shows that the user tracking information from Server_B **24B** ("**the received partial profile**"), as shown in green highlighting above, was "**add**[ed]" to the maintained profile which, as shown in this example, also includes tracking information about the user's visit to Server_A **24A**. The "**maintained profile**" at database server **25** would store other information, including user demographic information, as explained. (Rosenberg, *e.g.*, 6:6-9, 7:19-40, Fig. 7.)

The "**maintained profile**" in Rosenberg is also "**believed to be related to the same entity**," because it relates to the same user identified by Cookie ID #123, corresponding to the above-mentioned unique identification number. (Rosenberg, Fig. 3, 5:63-65, 7:20-29; Schmandt, ¶125.) And as explained for claim 11(a), receipt and storage of the partial profile, including adding it to a maintained profile, occurs "**automatically with the computer system**." (Schmandt, ¶¶127, 94.)

d. "automatically with the computer system generating and storing an electronic record of which of the plurality of unaffiliated third parties contributed to the maintained profile particular profile attributes;"

As noted, when database server **25** receives user tracking information from an individual server **24**, it records which server provided the information. Referring again to Figure 3:

Cookie ID #	Last Visit to Server_A	Content Requested			Last Visit to Server_B	Content Requested		
		News	Product Info	Feature Story		News	Product Info	Feature Story
123	4-9-96;18:25	2	5	0	7-4-96;16:23	1	7	3

Figure 3

(Rosenberg, Fig. 3 (highlighting added).) In this example, the tracking information for the user identified by Cookie ID #123 is divided into "**Last Visit to Server_A**" and "**Last Visit to Server_B**." Rosenberg confirms that database server **25** could also store "additional entries for a large number of servers." (Rosenberg, 6:6-9.)

It therefore would have been obvious that database server **25** stores "**an electronic record of which of the plurality of unaffiliated third parties contributed to the maintained profile particular profile attributes**," *i.e.*, an electronic record of which individual server **24** contributed particular user tracking information ("**particular profile attributes**") to the maintained profile for the user. (Schmandt, ¶128.) This also occurs "**automatically with the computer system**" as explained for claim 11(a), because storage of the electronic record occurs as part of the automatic storage at database server **25**. (Schmandt, ¶¶128, 94.)

e. "wherein the maintained profile, including the added partial profile, comprises data used in targeting third-party advertisements to the user computer over the global computer network."

Rosenberg discloses and renders obvious that "**the maintained profile**" of the user – including the newly-added user tracking information ("**the added partial profile**") – can be used to target advertisements to the user computer.

Figure 6 of Rosenberg, mentioned above, shows an embodiment in which database server **25** sends user tracking information to Server_B **24B** to enable the server to create a customized page. (Rosenberg, 6:59-67, Fig. 6.)

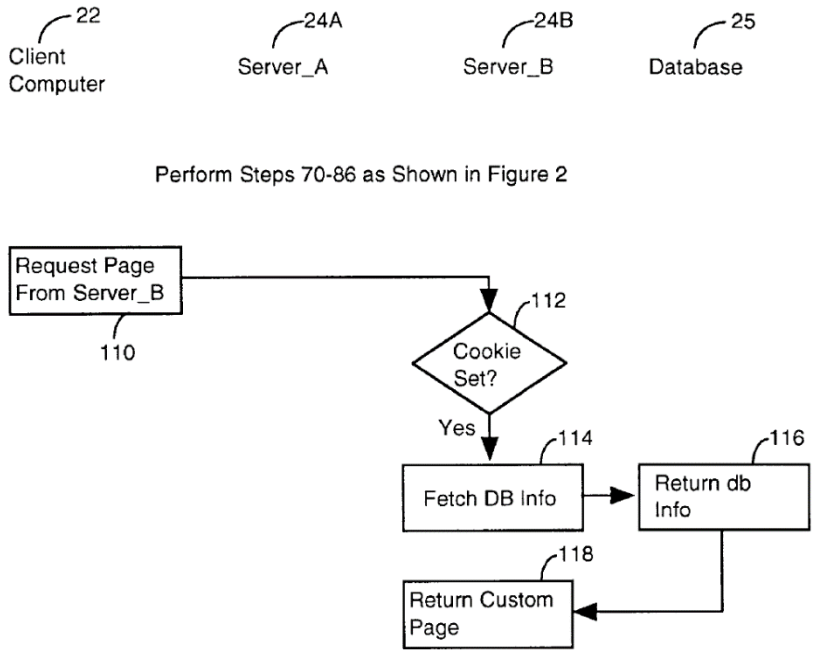

Figure 6

(Rosenberg, Fig. 6.) Figure 6 shows "processing steps that can be used to generate a response <u>that is customized for the browser</u> requesting the page of information." (Rosenberg, 6:59-61.) Step **112** determines that a cookie has been set for Server_B

24B, which is "followed by the step of server B fetching information from the database **25** that is particular to this browser **34**." (Rosenberg, 6:65-67.)

This information includes the profile information discussed above, which includes user activity with respect to previous website visits and demographic information. (Rosenberg, 5:55-6:5, 7:1-9, 7:19-22.) This information is then provided to Server_B **24**B, as shown in Steps **114** and **116** above. As Rosenberg explains, "[t]he browser information database program **64**," which is part of database server **25**, obtains the profile information from the database and "passes this information back to server **24**B (step **116**). Server **24**B interprets this information and return[s] a customized page to the client computer **22** (step **118**)." (Rosenberg, 7:10-13.) "For example, if the content information indicates that the individual using the specified browser requests a large amount of product information, the returned page is generated to emphasize product information." (Rosenberg, 7:13-17.) Rosenberg thus discloses using the tracking information in the user's maintained profile ("**the maintained profile, including the added partial profile**") to deliver targeted information to the user computer. (Schmandt, ¶129.)

Rosenberg can also target based on demographic information in the maintained profile. "The demographic information may also be used to provide customized responses to page requests. As indicated above, customized responses may also be based upon the previously discussed passive tracking information."

(Rosenberg, 7:41-46.) Rosenberg therefore discloses that "**the maintained profile, including the added partial profile**," *i.e.*, all of the tracking and demographic information in the maintained profile about the user, which includes the added partial profile, "**comprises data used in targeting third-party advertisements to the user computer over the global computer network**," *i.e.*, comprises data that is used in creating customized responses (such as product information) that are provided to the user's computer over the Internet.

As noted for claim 11(a), although the example from Figure 6 above shows profile information for the user being made available to Server_B **24**B, Rosenberg makes clear that the profile information could also have been used by Server_A **24**A, or any other cooperating server **24** in which a cookie has been stored with the unique identifier. (Rosenberg, 7:51-55; Schmandt, ¶¶129, 104.)

Rosenberg does not expressly state that its "customized responses" contain "**target**[ed] **third-party advertisements**," but this would have been obvious based on Rosenberg. Rosenberg explains that one of the purposes of his invention is to "allow editors and advertisers to tailor their content to users." (Rosenberg, 3:6-8.) It thus would have been obvious to implement Rosenberg to provide "customized responses" in the form of third-party advertisements targeted based on maintained profile information as explained above. (Schmandt, ¶131.)

This would also have been obvious based on Rosenberg in further view of

Zeff and **Sterne**. As explained for claim 11(a), Zeff and Sterne are analogous references describing the Firefly Passport system which provides a profile sharing service similar to database server **25** in Rosenberg. (Schmandt, ¶¶109-111.) Zeff and Sterne explain that Firefly Passports can be shared with websites and used for targeting third-party advertisements. (Schmandt, ¶131; Zeff, pp.0057-0058 ("For an advertiser, this means going beyond general demographic targeting and delivering ads to individuals who have indicated (through their actions) an interest in the product."); Sterne, pp.00171-00172 (explaining that Firefly could use profile information to recommend or promote movies, CDs, or other products to users).) It therefore would have been obvious to implement Rosenberg for "**targeting third-party advertisements**," such as advertisements for products or services provided by third parties. (Schmandt, ¶132.) Under the proposed combination, any advertisement could have been targeted and delivered to the user, including an advertisement for a product or service of a party different from the parties who own and control database server **25** and each individual server **24**. (*Id.*)

An ordinarily skilled artisan would have been motivated to use the "customized responses" in Rosenberg to deliver targeted third-party advertisements to obtain revenue from their display. Zeff explains that Internet advertising had by 1997 "grown to a $301 million industry, with revenue projections of $5 billion by the year 2000." (Zeff, p.0015.) This in turn would have motivated the parties that

own, control and operate individual websites in Rosenberg, such as the websites of Server_A **24**A or Server_B **24**B, to use the maintained profile to target third-party advertisements to visitors in order to sell advertisement display placement to third-party advertisers. (Schmandt, ¶132.)

This motivation would have been further enhanced by the demographic and behavioral targeting features of Rosenberg which, as explained, "allow editors and advertisers to tailor their content to users." (Rosenberg, 3:6-8.) As Zeff notes, targeting and tailoring based on a user's actions, which is precisely what Rosenberg discloses, "means that the ads he or she sees are more likely to be for products of interest." (Zeff, pp.0057-0058.) This, in turn, would have resulted in better responses by users to third-party advertisements, thus potentially increasing the desire of third-parties to pay websites to display them. (Schmandt, ¶132.)

2. Claim 13: "The data storage medium of claim 11 wherein the computer system electronically adding the received partial profile to a maintained profile believed to be related to the same entity comprises the computer system adding the received partial profile to a maintained profile believed related to the same entity on account of the received partial profile and the maintained profile being related to the same user computer."

Claim 13 was largely covered by the discussion of claim 11 above. As explained for claim 11(d), the user via its web browser **34** (the "**entity**") is assigned a unique identification value ("i") used to store information about the user. (Rosenberg, 5:8-16.) Referring again to Figure 3:

Cookie ID #	Last Visit to Server_A	Content Requested			Last Visit to Server_B	Content Requested		
		News	Product Info	Feature Story		News	Product Info	Feature Story
123	4-9-96;18:25	2	5	0	7-4-96;16:23	1	7	3

Figure 3

(Rosenberg, Fig. 3 (highlighting added).) As explained, the first column (Cookie ID #123) corresponds to the unique identification number for the user who accessed individual servers **34** through a web browser ("**entity**"). (Rosenberg, 5:63-65.) As noted, the claimed "**received partial profile**" in Rosenberg corresponds to tracking information obtained from Server_B **24B**, highlighted above in green.

The received partial profile in Rosenberg is added to the maintained profile "**on account of the received partial profile and the maintained profile being related to the same user computer**," because the unique identifier in Rosenberg is stored as a cookie at the user's web browser, and thus, is specific to the web browser on the user computer. (Schmandt, ¶135; Rosenberg, 7:62-8:11; *see also id.*, 2:15-21, 7:48-55.) Rosenberg thus discloses "**adding the received partial profile to a maintained profile believed related to the same entity**," *i.e.*, adding the tracking information for the user from Server_B **24B** to the maintained profile for the user at database server **25**, "**on account of the received partial profile and the maintained profile being related to the same user computer**," *i.e.*, by using the identification value that is particular to the user's browser. (Schmandt, ¶135; Rosenberg, 6:63-67.) In the example of Figure 3 above, the new tracking

information from Server_B **24B** came from the browser assigned "Cookie ID #123," and thus, came from the same user browser (and thus the same user computer) from which the other "**maintained profile**" information was received, including user tracking information from Server_A **24A** and any demographic or other information provided by this user via the user's web browser. (Schmandt, ¶135.)

3. Claim 14: "The data storage medium of claim 13 wherein the computer system determines that the received partial profile and the maintained profile are related to the same user computer by automatically reading a cookie on the user computer."

Claim 14 was largely covered in the discussion of claim 13. The '582 patent describes a "**cookie**" as "[a] text (or alphanumeric) string that is put on a computer hard disk of a visitor to a web site by the web site's server." ('582, 2:63-65.) This description mirrors the form and function of the "Cookie ID #" in Figure 3:

Cookie ID #	Last Visit to Server_A	Content Requested			Last Visit to Server_B	Content Requested		
		News	Product Info	Feature Story		News	Product Info	Feature Story
123	4-9-96;18:25	2	5	0	7-4-96;16:23	1	7	3

Figure 3

(Rosenberg, Fig. 3 (highlighting added).) Rosenberg explains that "[t]he first column of FIG. 3 specifies a 'cookie ID #', which is the previously discussed unique identification number." (Rosenberg, 5:63-65.) Rosenberg explains that Server_A **24A** and Server_B **24B** each cause a cookie to be stored by the browser containing the same unique identifier, using standard techniques. (Rosenberg, 7:62-8:32.)

As fully explained for claim 11(a), database server **25** automatically receives tracking information from each individual server computer **24**, including Server_B **24B**. (Schmandt, ¶¶92-94; Rosenberg, 5:57-59, 6:59-62, 7:7-9.) Rosenberg does not disclose details about the physical transmission of tracking information from Server_B **24B** to database server **25**, but it would have been apparent and obvious that database server **25** would have determined that the "**received partial profile and the maintained profile are related to the same user computer by reading a cookie on the user computer**." (Schmandt, ¶¶138-139.) This is because, as shown in Figure 3, database server **25** stores the "**received partial profile**" from Server_B **24B** information in association with the user based on the unique cookie value (*i.e.*, "Cookie ID #123"). It therefore would have been apparent and obvious that database server **25** identifies the maintained profile for the user, in order to add the received partial profile, by reading the cookie (*i.e.* "Cookie ID #123") stored on the user computer. (Rosenberg, 5:12-16 ("[T]he database **25** is accessible by each server computer **24** in the network. Thus, the <u>data associated with the unique identification value 'i' is accessible by each server computer **24**</u> in the network.").) As noted, the '582 patent describes a "**cookie**" as "[a] text (or alphanumeric) string that is put on a computer hard disk of a visitor to a web site by the web site's server" ('582, 1:63-65), which precisely describes the cookie in Rosenberg.

In fact, if database server **25** in Rosenberg did <u>not</u> receive and process

("**read**[]") the cookie that was on the user computer (*i.e.* "Cookie ID #123"), it could not store the "**received partial profile**" from Server_B **24B** in association with that user – a feature that Rosenberg clearly has. (Schmandt, ¶139.) The determination that the received partial profile and the maintained profile "**are related to the same user computer**" would also have occurred "**automatically**" for the same reasons as claim 11(a), as it would have been part of the process by which database server **25** receives and stores the "**received partial profile**." (Schmandt, ¶¶139, 94.)

Petitioner notes that claim 14 only requires that the "**computer system**," *i.e.*, database server **25** in Rosenberg, make the claimed determination "**by automatically reading a cookie on the user computer**." The claim does not require that the "**computer system**" *directly* read the cookie from the user computer, and the '582 patent expressly contemplates that the cookie can be provided to and read by the computer system via an intermediate server. The '582 patent explains, for example, that a third party can receive a cookie "<u>from the server that installed that cookie, or from another third party who so acquired the data from a chain of parties going back to that cookie setting server</u>, etc." ('582, 3:1-6.) It would have been obvious that, in Rosenberg, the cookie would have been provided to database server **25** by Server_B **24B**, for example, when Server_B **24B** sends the tracking information about the user ("**partial profile**"). Server_B **24B**, in turn, acquired that cookie from the web browser when the user accessed the website using that browser.

Database server **25** thus obtains and reads the cookie as obtained from Server_B **24**B, which as noted, satisfies claim 14. (Schmandt, ¶140.)

4. Claim 15: "The data storage medium of claim 11 wherein the indicia of instructions instruct the processor to perform a method that further comprises: automatically with the computer system electronically maintaining an electronic record of which unaffiliated third party contributed, to the maintained profile, the profile attributes used in targeting the advertisements."

Claim 15, like many other dependent claims, does not add much to claim 11. Claim 11(e) recites that the "**maintained profile**" comprises "**data used in targeting third-party advertisements to the user computer over the global computer network**." Claim 15 further requires "**maintaining an electronic record of which unaffiliated third party contributed, to the maintained profile, the profile attributes used in targeting the advertisements**."

As explained for claim 11(e), Rosenberg discloses delivering targeted advertisements to users based on user tracking information stored as part of the "**maintained profile**" for the user at database server **25**. (Schmandt, ¶¶129-132.) The "**electronic record**" for purposes of claim 15 takes the form of the records in Rosenberg electronically maintained by database server **25** identifying which individual server **24** ("**which unaffiliated third party**") contributed the user tracking information ("**profile attributes**"). Referring again to Figure 3:

Cookie ID #	Last Visit to Server_A	Content Requested			Last Visit to Server_B	Content Requested		
		News	Product Info	Feature Story		News	Product Info	Feature Story
123	4-9-96;18:25	2	5	0	7-4-96;16:23	1	7	3

Figure 3

(Rosenberg, Fig. 3 (highlighting added).) Figure 3 plainly confirms that database server **25** maintains an electronic record of which individual server **24** ("**unaffiliated third party**") provided particular tracking information about that user. As shown, the tracking information for the user identified by Cookie ID #123 is divided into "**Last Visit to Server_A**" and "**Last Visit to Server_B**." Rosenberg confirms that database server **25** could also store "additional entries for a large number of servers." (Rosenberg, 6:6-9.) In the example above, "the data structure tracks the content requested during the last visit to the server A, which was on Apr. 9, 1996 (4-9-96) at 6:25 p.m. (18:25). In this example, the user of the web browser requested two pages of news and five page of product information. Similar data is available regarding the last visit to server B." (Rosenberg, 5:65-6:5; *see also id.*, 7:2-7 (similar description for Figure 7).) Database server **25** therefore "**maintain**[s] **an electronic record of which unaffiliated third party contributed, to the maintained profile, the profile attributes used in targeting the advertisements**," because it stores and maintains a record of which server **24** contributed user tracking information to the maintained profile. (Schmandt, ¶143.)

As explained for claim 11(e), that user tracking information can be provided from database server **25** to a server (such as Server_B **24**B or Server_A **24**A) and **used** in generating customized information (such as targeted third-party advertisements) for the user. (Schmandt, ¶¶129-132; Rosenberg, 6:65-67, 7:10-17, 3:6-8.) Under the proposed combination, therefore, database server **25** keeps track of which individual server **24** contributed the user tracking information that is used in targeting the advertisements to the user. Finally, as explained for claim 11(a) and 11(d), maintaining this electronic record occurs "**automatically with the computer system**," because storage of the electronic record occurs as part of the automatic storage process at database server **25**. (Schmandt, ¶¶143, 94.)

5. Claim 19: "The data storage medium of claim 11 wherein the indicia of instructions instruct the processor to perform a method that further comprises: automatically with the computer system selecting profile attributes from the maintained profile based on the source thereof."

Claim 19 was largely covered in the discussion of claim 11(e). As noted, database server **25** can select and transmit profile attributes to an individual server **24** (*e.g.*, Server_B **24**B or Server_A **24**A), such as tracking information regarding previous visits to websites and demographic information, to enable the server to provide targeted information such as advertisements. (Schmandt, ¶¶129-132.)

The profile attributes sent to server **24** are also selected based on "**the source thereof**," *i.e.*, based on the particular user and web browser that generated them.

Figure 6, as explained for claim 11(e), shows a step "of server B fetching information from the database **25** that is particular to this browser **34**." (Rosenberg, 6:65-67.) This information is then used by the receiving server **24** to generate a customized response for the user. (Rosenberg, 7:13-17.) Rosenberg therefore discloses "**automatically with the computer system**," *i.e.*, automatically with database server **25**, "**selecting profile attributes from the maintained profile**," *e.g.*, selecting user tracking or demographic information from the profile of the user at database server **25**, "**based on the source thereof**," *i.e.*, based on the user who provided those profile attributes. (Schmandt, ¶¶145-146.)

This applies to both types of profile attributes in Rosenberg, *i.e.*, user tracking and demographic information. With respect to tracking information, as explained, database server **25** stores and retrieves it based on the unique identification number of the user (*e.g.* "Cookie #123"). (Rosenberg, *e.g.*, 5:8-16, 5:63-65, Fig. 3.) The same is true for demographic information, which is also provided by the user and then "passed to the database **25**, along with the unique identification information." (Rosenberg, 7:20-28.) Database server **25** thus selects profile attributes from the maintained profile "**based on the source thereof**," as claimed.

6. Claim 20: "The data storage medium of claim 11 wherein the indicia of instructions instruct the processor to perform a method that further comprises: automatically with the computer system electronically reading a cookie previously stored on the entity's computer, as a result of the URL redirection."

Claim 20 was largely covered in the discussion of claims 13 and 14 above. As explained, database server **25** automatically reads a cookie previously stored on the entity's computer when it receives tracking information about that user from Server_B **24**B ("**partial profile**"). As also explained, it would have been obvious that database server **25**, as part of the process of adding the received partial profile to the maintained profile, receives and processes the cookie (*e.g.* "Cookie ID #123" in the example of Figure 3) in order to store received user tracking information in association with the user. (Schmandt, ¶¶138-140.)

The cookie was also "**previously stored on the entity's computer, as a result of the URL redirection**." As explained for claim 11(b), using the HTML frame example of Rosenberg in which the user accesses Server_B **24**B by URL redirection from Server_A **24**A via "http://www.search.com/cnet.cgi?**3676778**", the URL causes the web browser to send the user's unique identification value ("3676778") to Server_B **24**B. (Schmandt, ¶123; Rosenberg, 8:48-51, 5:36-38.) In one embodiment, Server_B **24**B then uses this unique user identification value to set a cookie for Server_B **24**B using the same value. (Rosenberg, 5:40-49, 8:27-32 ("In particular, the browser tracking module **48**B [of Server_B **24**B] extracts the query

string (the data after the '?', in this example, the value 'i') from the request and decodes it to yield i. The browser tracking module **48**B delivers an HTTP header that sets the cookie to i and returns any additional data that is required.").) The cookie was thus stored "**as a result of the URL redirection**." (Schmandt, ¶149.)

C. Ground 2: Claim 16 Is Obvious Over Rosenberg in View of Zeff and Sterne, in Further View of Farber

1. Claim 16: "The data storage medium of claim 11 wherein the indicia of instructions instruct the processor to perform a method that further comprises: automatically with the computer system electronically determining whether the received partial profile contains any profile attributes about the entity that were not previously contained in a maintained profile."

As explained for **Ground 1**, Rosenberg discloses a system in which database server **25** obtains a "**received partial profile**," such as tracking information about a user obtained from an individual server **24**, and adds it to the "**maintained profile**" for the user. But Rosenberg does not appear to disclose a further step of determining whether the received partial profile contains "**any profile attributes about the entity that were not previously contained in a maintained profile**," so for this feature, Petitioner has cited **Farber** (EX1006).

Farber describes techniques for detecting if a new data item (such as a new file or database record) already exists in a system, and if so, either deleting the duplicate data item or not adding the new data item to the system. Farber explains that "when a processor (or some location) obtains a data item from another location

in the DP [data processing] system, it is possible that this obtained data item is already present in the system (either at the location of the processor or at some other location accessible by the processor) and therefore a duplicate of the data item is created." (Farber, 2:47-52.)

Farber purports to address the issue by describing an additional identifier, called a "True Name," which is based on the actual data content of the data item. (Farber, 32:54-60.) In one embodiment, the "True Name" is determined by using a hashing algorithm, such as the well-known MD5 hashing algorithm, to calculate a unique identifier for a data item based on its contents. (Farber, 12:54-13:19.) As was well-known, a hashing algorithm mathematically processes input data to generate a unique identifier (a fixed-length 128-bit identifier in the case of MD5), which is often referred to as a "hash value" or "message digest" (MD). (Schmandt, ¶¶58-59, 155.) This hash value is unique and specific to the input data, meaning that the hashing algorithm will always generate the same value from the same input data. Conversely, two different sets of input data should not, using a properly designed hashing algorithm, generate the same hash value. (*Id*.)

Farber describes a process for "assimilating" a new data item into a data processing system by calculating its True Name (using for example a hashing algorithm) and adding it to a True File registry **126**. (Farber, 14:40-50.) "If the data item already exists in the True File registry **126**, <u>this will be discovered and used</u>

during this process, and the duplicate will be eliminated." (Farber, 14:45-47.) This beneficially results in the system "stor[ing] at most one copy of any data item or file by content, even when multiple names refer to the name content." (Farber, 14:48-50; *see also id.*, 33:4-9.) The True Name can also be applied to database records. (Farber, *e.g.*, 38:41-39:6 ("True Names would be equally valuable in a relational or object-oriented database…"), 32:54-60.) This enables the database to "permit efficient elimination of duplicate records." (Farber, 38:45-53.)

Rationale and Motivation to Combine (Ground 1 Prior Art with Farber): It would have been obvious to combine the prior art for **Ground 1** (Rosenberg, Zeff and Sterne) with Farber. (Schmandt, ¶158.) The combination would have predictably resulted in the system of Rosenberg under the proposed combination in which database server **25** automatically computes and stores a content-based identifier (such as a True Name in Farber) and stores it with user tracking information received from an individual server **24**.

Accordingly, under the proposed combination, when database server **25** receives "**the received partial profile**," *i.e.*, new tracking information about the user from an individual server **24** as described for **Ground 1**, database server **25** would determine if the "**maintained profile**" already includes the new tracking information, *e.g.*, based on having a True Name stored in the maintained profile that matches the True Name calculated for the newly-received "**partial profile**." The

proposed combination would thus have resulted in "**electronically determining whether the received partial profile contains any profile attributes about the entity that were not previously contained in a maintained profile**," because database server **25** would have automatically determined if new tracking information for the user received from server **24** ("**the received partial profile**") was not previously stored in the user's maintained profile. If the maintained profile does not already contain the received partial profile, database server **25** adds the received partial profile to the maintained profile. Otherwise, the received partial profile may be discarded and not stored. (Schmandt, ¶158.)

As explained for **Ground 1**, Rosenberg, Zeff and Sterne are analogous references. (Schmandt, ¶111.) Farber is also an analogous reference in the field of data processing systems and storage of information and would have been reasonably pertinent to a problem faced by the inventor of how to implement the disclosed feature of determining if received partial profile attributes match attributes already stored by the system. ('582, 9:29-41; Schmandt, ¶159.) More fundamentally, Farber discloses a broadly-applicable technique for uniquely identifying items in a data processing system based on their contents, which would have been reasonably pertinent to a wide range of problems. (Schmandt, ¶159.)

An ordinarily skilled artisan would have had two interrelated motivations to combine. (Schmandt, ¶¶160-164.) First, the proposed combination would have

improved efficiency of database server **25** by avoiding storage of duplicate copies of the same user tracking information. Farber provides an express motivation to combine by explaining that, using the True Name identifier, the system would store at most one copy of a particular data item. (Farber, 14:48-50, 33:4-9.) This would have ensured that database server **25** stores received user tracking information only when it actually represents new information that has not been previously stored, thus improving system efficiency. (Schmandt, ¶160.)

An ordinarily skilled artisan would have appreciated it was common for computer systems connected over a complex network such as the Internet to receive duplicate copies of the same information. (Schmandt, ¶161.) This would have been familiar to anyone who had ever received multiple copies of the same email message. In the context of the proposed combination, an ordinarily skilled artisan would have recognized numerous well-known scenarios that could have resulted in database server **25** receiving multiple copies of the same user activity information from an individual server **24**, including communication failures, delays and other disruptions in the network. (Schmandt, ¶¶161-162.) The techniques of Farber would have enabled database server **25** of Rosenberg to detect when, for whatever reason, it receives duplicate user activity information from an individual server **24**, beneficially enabling database server **25** to avoid adding that duplicate information to the maintained profile. (Schmandt, ¶163.)

And this would have provided a second clear benefit to the system of Rosenberg – increasing the relevance of targeted advertising. As explained for **Ground 1**, Rosenberg discloses using the user tracking information to provide customized information such as targeted advertisements to the user. (Schmandt, ¶¶129-132; Rosenberg, *e.g.*, 7:10-17.) But if database server **25** receives and stores multiple copies of the same tracking information about the user, database server **25** will have an inaccurate and/or skewed record of the user's prior activity, thus potentially distorting any targeting that relies on prior user activity. (Schmandt, ¶164.) The techniques of Farber would thus have improved Rosenberg by preventing storage of duplicate user tracking information, thus increasing the accuracy of targeting and the relevance of targeted information. (*Id.*)

An ordinarily skilled artisan would have had a reasonable expectation of success, and the proposed combination was fully enabled. (Schmandt, ¶165.) Hashing algorithms such as MD5 were well-known, and computing a hash value for received partial profile information, and storing that value in database server **25**, would have been trivially simple. (*Id.*) For example, each new record associated with a visit to an individual server **24** could have been stored alongside an MD5 or other hash value that uniquely identifies the contents of that record, which in turn could have been used by database server **25** to detect subsequent receipt (and thus prevent storage) of duplicate information. (*Id.*)

D. Grounds 3-4: Obviousness in Further View of Merriman

Grounds 3-4 address a potentially narrow construction of claim 11(a), which recites in relevant part "**electronically receiving at a programmed computer system… a partial profile of <u>an entity that uses a user computer</u>… and <u>accessing a website</u>**." As explained for claim 11(a) in **Ground 1**, database server **25** of Rosenberg ("**a programmed computer system**") receives tracking activity about a user ("**a partial profile of an entity that uses a computer**") reflecting the user's activity on a particular website. (Schmandt, ¶¶91-94.)

Claim 11 does not appear to require that the programmed computer system receive the partial profile while the entity is **<u>currently</u>** accessing a website. Nothing in claim 11 appears to preclude a system where the "**partial profile**" is received after the entity's access to a website. Nevertheless, as explained for claim 11(a), it would have been obvious that the partial profile in Rosenberg could also have been received by database server **25** during user access to Server_B **24**B, for example, if the user accessed Server_B **24**B "when network traffic is light." (Rosenberg, 5:59-62; Schmandt, ¶94.) Petitioner has nonetheless cited to Merriman in the event Patent Owner were to argue for a narrow interpretation requiring that the programmed computer system receive the partial profile <u>while the entity is currently accessing</u> a website, and if Patent Owner further argues that Rosenberg alone does not disclose such a requirement. For all other limitations of all challenged claims, the mapping

for **Grounds 1-2** remains applicable. (Schmandt, ¶¶166-168.)

Merriman (EX1008) relates to targeted advertising techniques. (Merriman, 2:5-6.) Merriman describes a technique for "re-targeted advertising" in which an advertisement is selected for a user based on the user's prior interactions at the advertiser's website. (Merriman, 3:20-34.) Merriman relies on a technique similar to Rosenberg in which user actions at a website are logged and reported to a central server for storage. But unlike Rosenberg, Merriman does not just disclose periodic reporting of user actions to a server – it also discloses reporting user actions in real-time as the user is currently accessing a website:

> To implement re-targeted advertising, a list of actions of each visitor at each advertiser's site is collected and reported back to the advertisement server. In one embodiment, the advertiser's web site reports activity in real time. In another embodiment, the advertiser's web site keeps a user log file of visitor activity and reports the user log file back to the advertisement server. Reporting of user log files may be by email or any other file transfer technique back to the advertisement server, where the user log files and other user data are merged.

(Merriman, 3:35-43.) With respect to the **non** real-time technique discussed above, it operates similarly to Rosenberg, *i.e.*, activity information is periodically sent as often as necessary. (Merriman, 4:45-50.)

But for the **real-time** reporting embodiment of Merriman mentioned above, particular tags (called "spotlight tags") are embedded on specific pages of the advertiser's website containing a redirect message to the advertising server. (Merriman, 4:51-5:2.) As a result, "the advertiser web site **16** provides real time reporting of user activities while the user is in the advertising web site **16**. The advertising server **14** assembles the activity list for each user." (Merriman, 4:66-5:3.) Merriman discloses an alternative embodiment for real-time reporting that uses an intermediate proxy server that sits between the user's web browser and the advertiser's website. (Merriman, 5:3-8.) But as shown below, the particular technique employed to implement real-time reporting is not critical to the proposed combination, as an ordinarily skilled artisan could have employed any number of other known and suitable methods. (Schmandt, ¶¶171, 179.)

Rationale and Motivation to Combine (Ground 1 and Ground 2 Prior Art with Merriman): It would have been obvious to combine the prior art cited in **Ground 1** (Rosenberg, Zeff, and Sterne) and **Ground 2** (Rosenberg, Zeff, Sterne, Farber) with Merriman. (Schmandt, ¶¶172-178.) The combination would have predictably resulted in the system of Rosenberg under the proposed combination discussed for **Ground 1** and **Ground 2**, in which database server **25** receives real-time tracking information about content requested by a user of Server_B **24B** while the user is currently accessing a website. The proposed combination would therefore

have resulted in database server **25** receiving "**a partial profile of an entity that uses a user computer coupled to the global computer network <u>and accessing a website</u>**," to the extent the claim is interpreted to require receiving the claimed partial profile at the same time the user is accessing a website. (Schmandt, ¶172.)

As explained for **Ground 1**, the claimed "**a website**" in Rosenberg corresponds to the website provided by Server_A **24A**, which provides URL redirection (via HTML frames) that enables the user to access the website provided by Server_B **24B**. (Schmandt, ¶¶95. 100.) Under the proposed combination with Merriman, tracking information about content requested by a user of Server_B **24B** would have been transmitted in real-time to database server **25**, in response to user actions on that website, while the user was currently accessing the websites provided by both Server_A **24A** and Server_B **24B**, as both are simultaneously being viewed and accessed by the user in separate frames within the same window in the user's browser. (Schmandt, ¶¶173, 100.)

As noted, Rosenberg, Zeff, Sterne and Farber are analogous references. (Schmandt, ¶¶111, 159.) Merriman is also an analogous reference in the field of Internet advertising and storage of profiles having informational attributes about each user. (Schmandt, ¶174.) Merriman would also have been reasonably pertinent to a number of problems facing the '582 inventor, including how to collect and store

profile information of individual users in a central repository, and enable that information to be used to target advertisements. (*Id.*)

An ordinarily skilled artisan would have had a clear motivation to combine – to improve the accuracy of the targeting of advertisements. As noted, database server **25** of Rosenberg would have received user tracking information from individual servers **24** on a periodic basis, "typically at the end of a day or at other times when network traffic is light." (Rosenberg, 6:59-62; *see also id.*, 7:7-9.) Depending on the timing of when tracking information is transmitted, database server **25** may not have the most up-to-date tracking information about users. (Schmandt, ¶175.) Take a scenario in which **(1)** a user visits the website of Server_B **24**B and requests several various pages of content, **(2)** moments later the user navigates to another participating website, let's call it Server_C, which asks database server **25** for the tracking information about the user and uses it for targeting based on the teachings of Rosenberg, and **(3)** at some point after that, Server_B **24**B sends the tracking information about the user to database server **25** for storage. Under this scenario, Server_C at step **(2)** did not receive the most up-to-date tracking information about the user because what it received did not reflect the user's recent activity at Server_B **24**B This, in turn, could have resulted in Server_C relying on stale user activity data, resulting in selection of advertisements not reflecting the user's <u>current</u> interests. (Schmandt, ¶175.)

But this problem disappears under the proposed combination with Merriman, because database server **25** would instead have received and stored the user tracking information at the time the user accessed Server_B **24**B, thus making that information immediately available to Server_C for tracking purposes at step **(2)** when the user navigates to the Server_C website. (Schmandt, ¶176.) The benefit of real-time reporting of user activity information would have been apparent and obvious; when targeting advertisements to a user based on its activities on a website, in the vast majority of cases, it is far more important to know what the user did five minutes ago than what the user did five hours ago, or five days ago. (*Id.*)

An ordinarily skilled artisan would also have appreciated that there are only a finite number of solutions to the problem of when to update a database to incorporate new information, with the two best-known approaches being real-time or immediate update with new information as it comes into existence (as disclosed in Merriman), and periodic update (as disclosed in Rosenberg and an embodiment in Merriman). (Schmandt, ¶177.) These two approaches date back to the earliest days of modern computing, but ordinarily skilled artisans would have appreciated that the "real-time" approach, regardless of the underlying application, has the benefit of keeping the database more up-to-date. (*Id.*) And although the real-time technique could have potentially consumed more network resources, the benefit of real-time updates to

database server **25**, and the resulting improvement in advertisement targeting, would have outweighed any potential downsides. (Schmandt, ¶178.)

An ordinarily skilled artisan would have had a reasonable expectation of success in implementing the fully-enabled proposed combination. (Schmandt, ¶179.) Record and logging user actions was a built-in feature of most web server software, and it would have been trivial to adapt a web server to provide a continuous update of user activity to another server. (*Id.*)

VII. CONCLUSION

Petitioner respectfully requests IPR institution.

Dated: August 19, 2022

Respectfully submitted,

By: */ Heidi L. Keefe /*
Heidi L. Keefe
Reg. No. 40,673
Counsel for Petitioner

COOLEY LLP
ATTN: Patent Group
1299 Pennsylvania Avenue NW
Suite 700
Washington, DC 20004
Tel: (650) 843-5001
Fax: (650) 849-7400

CERTIFICATE OF COMPLIANCE WITH WORD COUNT

Pursuant to 37 C.F.R. § 42.24(d), I certify that this petition complies with the type-volume limits of 37 C.F.R. § 42.24(a)(1)(i) because it contains 13,949 words, according to the word-processing system used to prepare this petition, excluding the parts of this petition that are exempted by 37 C.F.R. § 42.24(a) (including the table of contents, a table of authorities, mandatory notices, a certificate of service or this certificate word count, appendix of exhibits, and claim listings).

DATED: August 19, 2022

COOLEY LLP
ATTN: Patent Docketing
1299 Pennsylvania Avenue NW
Suite 700
Washington, D.C. 20004
Tel: (650) 843-5001
Fax: (650) 849-7400

/ Heidi L. Keefe /
Heidi L. Keefe
Reg. No. 40,673

CERTIFICATE OF SERVICE

I hereby certify, pursuant to 37 C.F.R. Sections 42.6 and 42.105, that a complete copy of the attached **PETITION FOR INTER PARTES REVIEW OF U.S. PATENT NO. 8,244,582 B2,** including all exhibits (**Nos. 1001-1016**) and related documents, are being served via Federal Express on the 19th day of August, 2022, the same day as the filing of the above-identified document in the United States Patent and Trademark Office/Patent Trial and Appeal Board, upon Patent Owner by serving the correspondence address of record with the USPTO as follows:

Louis J. Hoffman, P.C.
7689 East Paradise Lane
Suite 2
Scottsdale, AZ 85260

And, via Federal Express upon counsel of record for Patent Owner in the litigation pending before the U.S. District Court for the Western District of Texas entitled *AlmondNet, Inc. and Intent IQ, LLC v. Meta Platforms, Inc.*, Case No. 6:21-cv-00896-ADA (W.D. Tex.) as follows:

Reza Mirzaie
Russ August & Kabat
12424 Wilshire Blvd., 12th Floor
Los Angeles, CA 90025
310-826-7474
Fax: 310-826-6991
Email: rmirzaie@raklaw.com

DATED: August 19, 2022

/ Heidi L. Keefe /
Heidi L. Keefe
Reg. No. 40,673
COOLEY LLP
1299 Pennsylvania Ave. NW, Suite 700
Washington, D.C. 20004
Tel: (650) 843-5001

UNITED STATES PATENT AND TRADEMARK OFFICE

BEFORE THE PATENT TRIAL AND APPEAL BOARD

META PLATFORMS, INC.,
Petitioner,

v.

ALMONDNET, INC.,
Patent Owner.

IPR2022-01436
Patent 8,244,582

PATENT OWNER'S PRELIMINARY RESPONSE

TABLE OF CONTENTS

I. INTRODUCTION 1

II. OVERVIEW OF THE ’582 PATENT 2

III. LEVEL OF ORDINARY SKILL IN THE ART 4

IV. CLAIM CONSTRUCTION 5

V. THE PETITION FAILS TO SHOW INVALIDITY OF ANY CLAIM. 5

A. Background of Rosenberg 6

B. The Petition’s Theory 12

C. Under the Petition’s application of Rosenberg, “receiving the partial profile” is not “achieved as a result of automatic URL redirection.” 14

VI. CONCLUSION 25

I. INTRODUCTION

The Petition should be denied on the merits, as none of its grounds is likely to succeed. The Petition relies only on the Rosenberg reference in each of its grounds for the "partial profile" limitation of independent claim 11 of the '582 Patent, the sole challenged independent claim, from which all other challenged claims depend. The Petition does not establish that reception of Rosenberg's alleged "partial profile is achieved as a result of automatic URL redirection," as required by all challenged claims.

Specifically, under the Petition's theory, any reception of the alleged "partial profile" would be achieved only as a result of user action that would need to occur after the redirection, which user action is required in order to generate the alleged "partial profile," and which user action will likely not even occur (such that no alleged "partial profile" will likely be received). The Petition does not explain how it is the URL redirection, rather than the intervening user action (which may or may not occur), that results in any reception of profile data. Indeed, the Petition's theory on this point is directly inconsistent with Petitioner's own admissions in a co-pending proceeding before the Board that, under such a scenario, redirection ***could not*** result in transfer of profile information. Institution should thus be denied.

II. OVERVIEW OF THE '582 PATENT

The '582 Patent discloses that its claimed invention relates generally to a "method directed to brokerage of attributes of information." Ex. 1001 at 1:29-31. According to the '582 Patent, "[a]dvances in database technology have given rise to commerce in records, files and databases, per se. For example, paying for a database credit check for an individual or buying a mailing list have become common practice." *Id.* at 1:35-38. The '582 Patent further discloses that "[u]nfortunately, the current state of information commerce is focused on the sales of whole databases, whole records, or evaluations based on single or clusters of records." *Id.* at 1:57-59. The '582 Patent indicates this is a problem because, in "applications where specific attributes of information strongly affect the value of evaluations, there is a need in the art for commerce in such attributes. For example, in targeted advertising, every attribute, which substantially affects the probability of that advertisement's success, innately has a discrete economic value." *Id.* at 1:59-65.

The '582 Patent solves this problem by utilizing "a descriptive-profile mercantile method, for use at a juncture in a data communications topology having associated therewith a maintained databank of partial profiles." *Id.* at 3:30-33. The '582 patent teaches that those maintained profiles may be updated by combining previously maintained profile information with additional profile information

about a given visitor that has been obtained as a result of redirection from a portion of a website page of a third party. For example: "By redirecting a portion of the visitor's page to the server, the visitor's browser reports to the server a cookie the server put on the visitor's computer in the past, if any." *Id.* at 4:5-8. That technical process allows consolidation of profile information about a given visitor, thereby adding value to a maintained profile, which can have use, as indicated, in targeted advertising.

Claim 11 is the sole independent claim challenged by the Petition, and all other challenged claims depend from it. Claim 11 recites:

> 11. A tangible, non-transitory data storage medium comprising indicia of instructions for a processor to perform a method of collecting profiles of Internet-using entities, the method comprising:
>
> (a) electronically receiving at a programmed computer system coupled to a global computer network, from at least one server controlled by one of a plurality of unaffiliated third parties, a partial profile of an entity that uses a user computer coupled to the global computer network and accessing a website, which partial profile is available to one of the third parties and contains at least one profile attribute related to the entity, and automatically with the computer system storing the received partial profile;
>
> (b) wherein receiving the partial profile is achieved as a result of automatic electronic URL redirection from a portion of a page of the website accessed by the user computer;

(c) automatically with the computer system electronically adding the received partial profile to a maintained profile believed to be related to the same entity;

(d) automatically with the computer system generating and storing an electronic record of which of the plurality of unaffiliated third parties contributed to the maintained profile particular profile attributes;

(e) wherein the maintained profile, including the added partial profile, comprises data used in targeting third-party advertisements to the user computer over the global computer network.

Id. at claim 11.

III. LEVEL OF ORDINARY SKILL IN THE ART

The Petition proposes that a person of ordinary skill in the art ("POSITA") in the field of the '582 Patent "would have possessed a bachelor's degree in electrical engineering or computer science, and two years of work experience in the field of network-based computer systems, such as systems for sending and receiving information over local networks and wide area networks (such as the Internet or World Wide Web). A person could also have qualified with more formal education and less technical experience, or vice versa." Pet. at 12. For purposes of this preliminary response, Patent Owner does not challenge this definition.

IV. CLAIM CONSTRUCTION

Petitioner states that it "does not believe an express claim construction is necessary at this time for this IPR." *See id.* at 13. Patent Owner agrees that claim construction is not necessary to resolve any issue for institution and that the plain and ordinary meaning of the claim language should be applied.

V. THE PETITION FAILS TO SHOW INVALIDITY OF ANY CLAIM.

All challenged claims require "electronically receiving … a partial profile … wherein receiving the partial profile is achieved as a result of automatic electronic URL redirection." Ex. 1001 at claim 11. The Petition, however, fails to establish how what it maps to the "redirection" of the claims can "result" in receiving what the Petition identifies as the "partial profile."

In each of the Petition's grounds, the Petition relies exclusively on Rosenberg for an alleged disclosure of "electronically receiving … a partial profile … wherein receiving the partial profile is achieved as a result of automatic electronic URL redirection."[1] A description of certain relevant portions of Rosenberg's system is provided below, followed by a brief summary of the Petition's theory as to how Rosenberg supposedly satisfies the "receiving … a

[1] The Petition relies on Zeff and Sterne only for the requirements of "unaffiliated third parties" and "target[ed] third-party advertisements." *See* Pet. at 37-42, 51-53.

partial profile … as a result of automatic electronic URL redirection" limitation. With that background, this preliminary response then identifies the numerous reasons the Petition's theory cannot succeed.

A. Background of Rosenberg

Rosenberg generally describes a system in which a given number of server computers 24A-24N "cooperatively observe a common protocol" that allows those computers to "track web browsers across distinct domains." Ex. 1003 at 4:52-64. Rosenberg's "common protocol relies upon a common database of information" for server computers 24A-24N, and the common database is contained in "server computer 25." *Id.* at 4:55-57. Rosenberg's Figure 1 illustrates the general structure of this system:

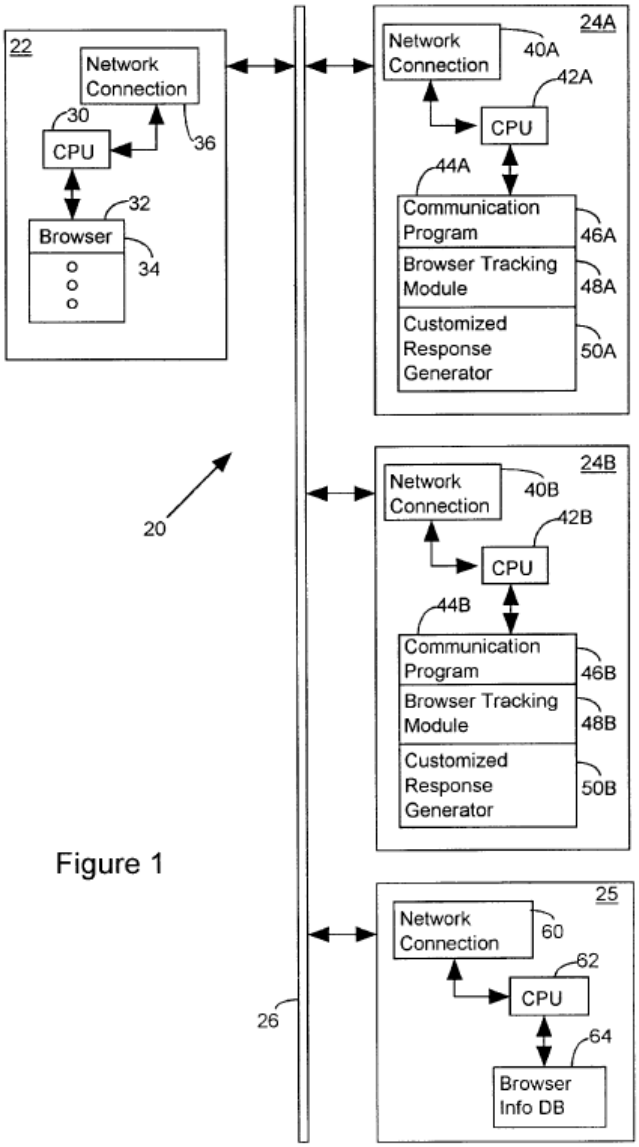

Figure 1

Id. at Fig. 1. Although Rosenberg's Figure 1 illustrates only two server computers 24A and 24B, Rosenberg teaches that a "typical embodiment" would include "server computers 24A through 24N." *Id.* at 4:16-20. Rosenberg's Figure 1 also shows "client computer 22," which is "a standard computer" that includes "a web browser" that is "used to communicate with remote server computers 24." *Id.* at 4:7-15.

Rosenberg's "common protocol" takes effect when client computer 22 requests a web page hosted by one of the servers 24A-24N. This is illustrated in Rosenberg's Figure 2 at step 70, where "Client Computer 22" performs the step of "Request[ing] Page From Server_A":

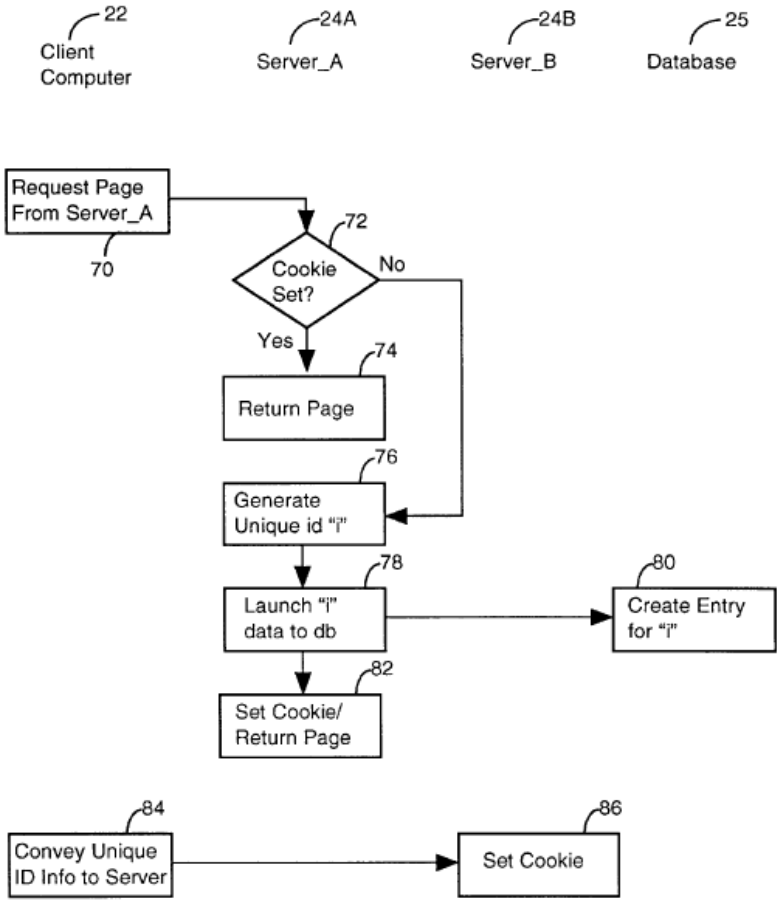

Id. at Fig. 2. After the user requests a page from Server_A, Server_A evaluates in step 72 whether a cookie has already been placed on client computer 22. *Id.* at 5:5-6, Fig. 2. If a cookie has already been placed, Server_A returns the requested webpage, and no further action is needed. *Id.* at 5:7-8. If no cookie exists, however, Server_A generates a unique identifier "i" and sends that identifier to database 25

so that the database can create a database entry for identifier "i." *Id.* at 5:8-12. The next step is to "set a cookie [on the client computer] corresponding to the unique identification value and return a page of the requested information" in step 82. *Id.* at 5:17-19. In step 82, however, "the returned page includes instructions to convey the unique identification information to additional server computers that are observing the same protocol," as illustrated in step 84. *Id.* at 5:21-26. Rosenberg teaches that, although Figure 2 displays only Server_B receiving the unique identification information "[f]or the purpose of simplicity," the unique identifier is actually sent "to each server in the network of servers that is operating in accordance with the invention." *Id.* at 5:21-33.

Rosenberg elsewhere describes the specific mechanism by which the unique identifier "i" is sent to the other servers (such as Server_B), namely by an embedded HTML object "that references another server computer, say server computer B 24B." *See id.* at 8:12-34 (explaining that there are "several ways in which an HTML reference to another site can be embedded in a page"). Although Rosenberg provides several examples of how the unique identifier "i" may be transmitted to Server_B, the Petition focuses primarily on just one embodiment: Server_A generates a page that creates multiple "frames, one of which references a page on another site [e.g., a site provided by Server_B]." *Id.* at 8:56-65 (describing the use of frames for this purpose); Pet. at 28-34, 42-46 (relying on Rosenberg's

teachings regarding frames). According to the Petition, this embodiment creates a scenario where, when a user navigates to the webpage provided by Server_A, the user's browser will display both the webpage of Server_A ***and*** the webpage of Server_B at the same time.

At pages 32-33, the Petition shows a "mock-up" of how Petitioner contends a request to a website provided by Server_A would appear in a user browser, such that both the page from Server_A and the page from Server_B would be visible simultaneously. The Petition emphasizes that the frame for Server_B would be opened without any user request to access the Server_B webpage. *See* Pet. at 43 ("As Rosenberg explains, '[a]n advantage of this approach is that <u>the request will be made automatically, without the need for human action</u>.") (quoting Ex. 1003 at 8:64-65) (emphasis in original).

The result of Server_A's creation of a frame on the user's computer is Server_B receives the identifier "i" and sets a cookie with "i" on the client computer. *See* Ex. 1003 at 5:21-42 (explaining that the page returned by Server_A "includes instructions to convey the unique identification information to additional server computers," and that "[d]ifferent techniques for achieving this operation are discussed below"); *id.* at 8:12-9:24 (discussing different techniques for transmitting identifier "i" to Server_B); *id.* at 5:40-54, 7:66-811 (explaining that as a result of Server_B's reception of the unique identifier, "server 24B will not

generate a unique identification value, but will rely upon the value established by server 24A" when placing a cookie on the client computer).

Now that both Server_A and Server_B have placed a cookie on the user's computer with the same identifier "i" (e.g., cookie ID "123"), both of those servers can update database 25 with information about "Content Requested" by a user accessing the webpages provided by Server_A and Server_B. Rosenberg teaches that the information used to generate the database entries is "passed from the access logs of the server computers [24A-24N] to the database 25, typically at the end of a day or at other times when network traffic is light." *Id.* at 5:55-62. The type of information stored in the database is illustrated in Rosenberg's Figure 3, reproduced below:

Cookie ID #	Last Visit to Server_A	Content Requested			Last Visit to Server_B	Content Requested		
		News	Product Info	Feature Story		News	Product Info	Feature Story
123	4-9-96;18:25	2	5	0	7-4-96;16:23	1	7	3

Id. at Fig. 3.

Notably, Rosenberg teaches that these database entries reflect what "the user of the web browser requested" (*id.* at 5:63-6:5) during the user's visits to each webpage. Rosenberg thus excludes from the "Content Requested" fields of the database any actions that the user did not specifically request (such as, e.g., the actions related to Server_A's communication of the unique identifier "i" to

Server_B, to the extent those actions occur automatically without user action). *See* Ex. 1002 ¶93 (explaining that the "tracking information about user activity from Server_B" "provides a portion of the attributes ***attributable to a user***, *i.e.*, the ***user's*** activity when accessing Server_B 24B") (emphases added).

The exclusion in Rosenberg makes good sense, because the purpose of Rosenberg's system is to gather information about ***user*** behavior. The fact that Server_A sent the user's browser to Server_B without the user's consent does not reflect any user behavior with respect to Server_B. *See, e.g.*, Ex. 1003 at 3:25-28 ("The method of the invention allows a web browser to be passively tracked so that the content preferences and interests associated with the ***individual using the web browser*** can be identified.") (emphasis added); *id.* at 3:33-37 ("This cumulative information defines content preferences and demographics associated with the individual using the web browser. This information can be used to provide responses tailored toward the individual using the web browser."); *id.* at 3:6-8 (specifying a goal of "editors and advertisers … tailor[ing] their content to ***users***") (emphasis added).

B. The Petition's Theory

Under the Petition's theory, when a user visits a website of Server_A (which website the Petition maps to "a website" of claim 11 (*see* Pet. at 33-34)), Server_A causes the user's browser to display two separate frames, one for the website

provided by Server_A and one for the website provided by Server_B. *Id.* at 32-33. The frame displaying the website provided by Server_B also causes the user's "web browser to send the user's unique identification value" (e.g., "i" or cookie ID "123") "to Server_B" so that Server_B "can then use this unique user identification value to set a cookie for Server_B 24B using the same value." *Id.* at 45. According to the Petition, Server_A's provision of a frame that displays the website provided by Server_B supposedly constitutes the "URL redirection" of the challenged claims. *See id.* at 42-43.

The Petition further maps the "partial profile" of the challenged claims to "[t]racking information about content requested by a user who is accessing Server_B." *Id.* at 22. According to the Petition, a "partial profile" is generated ***after*** the alleged redirection using frames from the website provided by Server_A. Specifically, the Petition alleges that the alleged redirection using frames "enabled the user to request news, product information and feature story pages from Server_B." *Id.* at 44. That allegation makes clear that, under the Petition's theory, the redirection must ***precede*** the collection by Server_B of tracked user requests for news, product information, and feature story pages, which constitutes the alleged "partial profile." *See id.*

C. Under the Petition's application of Rosenberg, "receiving the partial profile" is not "achieved as a result of automatic URL redirection."

As noted above, the Petition alleges that a user is redirected to Server_B from Server_A when Server_A creates a frame in the user's browser where the source code for the frame points to a webpage provided by Server_B. The Petition thus contends that, if a user then requests "news, product information [or] feature story pages from Server_B" using the aforementioned frame, database server 25 receives the "partial profile" information that results from such user requests "as a result of automatic URL redirection." *Id.* Although the Petition does not propose any interpretation of "result of," the Petition sets forth no valid theory or understanding under which "receiving the partial profile" could be fairly understood to be "a result of automatic URL redirection."

The Petition's theory fails, first, because to the extent any "partial profile" is received ***after*** the alleged redirection, that reception is caused by intervening user interaction in the time period between the alleged redirection and the reception of the profile information. Specifically, the Petition is clear that its theory is based on redirection enabling the user to, thereafter, ***generate*** the partial profile. *See id.* (contending that the alleged redirection "enabled the user to request news, product information and feature story pages from Server_B—thus generating the 'partial

profile'"). Notably, the Petition does not contend that the user ***must*** request news, product information or feature story pages from Server_B following the alleged redirection (and of course Rosenberg's system would have no way of controlling user action such that a mandatory requirement would even be possible).[2] Thus, the Petition's theory here acknowledges that, at the time of the alleged redirection, the partial profile information does not yet exist, and can only exist in the future (such that it can only be later received by database server 25) ***if*** the user decides to "request news, product information and feature story pages from Server_B—thus generating the 'partial profile.'" *Id.* The Petition provides no explanation for why

[2] This is not just a remote possibility. To the contrary, the ***likely*** scenario is that a user would not request additional information from Server_B, because, under the Petition's theory, the user is sent to Server_B without the user's request or consent. There is no reason to assume that a user would have had any interest in content provided by Server_B, and thus there is no reason to assume that the user would request any content from Server_B even after Server_A creates a frame allegedly displaying the Server_B website in the user's browser. Indeed, Rosenberg itself provides no teaching or discussion of any user requesting content from Server_B after Server_A opens up a frame for Server_B's webpage without the user's request or consent.

Server_A's alleged redirection to Server_B can be fairly said to "result" in database server 25 receiving profile data, where even after the alleged redirection the user will likely ***not*** take the steps necessary for database server 25 to receive the profile information.

The Petition certainly provides no support for any interpretation of the claims under which whether redirection "results" in a particular event depends on whether or not an unpredictable user takes a specific set of actions between the redirection and the following event. To the contrary, all examples in the specification of the '582 Patent show that the redirection directly transmits partial profile information to the receiving entity without any intervening user action needed between (1) the redirection and (2) the subsequent reception of the partial profile. *See* Ex. 1001 at 11:62-12:4 ("***Initially a user will interface with the system by providing the system's databank with a partial profile*** …. The user [then] enables the server attached to the databank to receive the cookie it installed by ***redirecting*** a portion of the visitor page to the databank's server.") (emphases added); *id.* at 4:2-8 ("The web-site forwards particulars from the visitor's credentials (a partial profile), as well as (optionally) a redirect to a portion of the visitor's page to a server …. By redirecting a portion of the visitor's page to the server, the visitor's browser reports to the server a cookie the server put on the visitor's computer ***in the past***, if any.") (emphasis added).

Indeed, the untenability of the Petition's position in this regard is shown by the Petition's inconsistency with Petitioner's own arguments in a co-pending proceeding before the Board (IPR2022-01481), challenging the validity of a commonly-owned patent with a priority date of the same year as the '582 Patent. Specifically, Petitioner argued in the co-pending proceeding that URL redirection cannot "result" in transfer of "profile data" to another computer, so long as the redirection occurs ***before*** the profile information is generated:

> Redirection through a URL in this manner would not have resulted in any profile information relating to the visiting being transferred. . . . For purposes of claim 1(a), the step of 'at a first time, redirecting the visitor computer to an ad network computer,' corresponds in Meyer to the URL redirection described above performed by a visitor <u>who is not yet a member</u>, and thus, occurs <u>before</u> the member has provided any profile information to the system. ***Redirection*** of the visitor to the service provider computer ('ad network computer') at this point in time, therefore, ***could not have resulted in 'transfer[] to the ad network computer any profile information*** related to the visitor,' ***because*** even if URL redirection in Meyer could cause transfer of profile information (which it cannot), ***no such information would have been available at the point in time when such redirection occurred***.

Meta Platforms v. AlmondNet, Inc., IPR2022-01481, Paper No. 1 ("-1481 Petition") at 27-28 (underlining in original, other emphases added, internal

citations omitted).

Thus, Petitioner's allegations in the -1481 Petition are directly inconsistent with its allegations in ***this*** Petition. Furthermore, as noted above, the Petition's theory regarding how Rosenberg's alleged "redirection" allegedly results in reception of a partial profile not only has the "redirection" take place ***before*** the alleged partial profile information is generated, but additionally requires that an unpredictable user take particular actions between after the alleged "redirection" in order for the alleged partial profile to be generated (and ultimately received).

The Petition's theory further fails under any other reasonable interpretation of "receiving … as a result of automatic URL redirection," because the alleged redirection is neither a necessary nor a sufficient condition for Rosenberg's database server 25 to receive the alleged partial profile. The alleged redirection is not a <u>sufficient</u> condition for reception of the "partial profile," because as explained above, the redirection can (and likely will) occur ***without*** the alleged "partial profile" ever being generated or received by Rosenberg's database server 25 (e.g., when the user chooses not to request any information from Server_B following the alleged redirection).

The alleged redirection is also not a <u>necessary</u> condition for database server 25 to receive the alleged "partial profile." As the declaration in support of the Petition acknowledges, it is "possible that the user in Rosenberg could have

directly navigated to and accessed Server_B 24B via its web browser ***without*** accessing the frame-based webpage provided by Server_A 24A (for example by entering the URL for Server_B 24B into the web browser address bar)." Ex. 1002 ¶101 (emphasis added). Under this scenario, Server_B would assign its own unique identifier to the user and would provide the alleged partial profile for the user to database server 25. *See* Ex. 1003 at Figs. 4-5; *id.* at 6:23-58 (explaining that if a user navigates to Server_B and Server_B has no record of a previous unique identification value assigned to the client computer 22, Server_B will assign its own unique identification value (e.g., "j" or Cookie ID "456") and submit partial profile information to database 25 using that unique identification value). Thus, because a user in Rosenberg's system can navigate to the webpage provided by Server_B ***without*** the alleged redirection, and database 25 would in that scenario ***still*** receive profile data describing the user's actions from Server_B, the alleged redirection is not a necessary condition for database server 25 receiving the alleged "partial profile" from Server_B.

For the above reasons, reception of the alleged partial profile information is simply not "as a result of" the alleged redirection under any reasonable interpretation. As explained above, in Rosenberg, URL redirection may occur without database server 25 receiving the alleged partial profile, because the receiving depends upon a user to take additional action that is likely to never occur.

Conversely, database server 25 may receive profile information describing the user's activity on Server_B in the absence of the alleged redirection, depending again on particular user action.

Despite the direct inconsistency between this Petition's theory and arguments presented by Petitioner in the -1481 Petition, and despite the fact that the alleged URL redirection is neither necessary nor sufficient for Rosenberg's database server 25 to receive the alleged partial profile information because unpredictable user action can cause (or not cause) the reception of the partial profile to occur with (or without) the alleged redirection, the Petition nevertheless alleges that the alleged partial profile was received "as a result of automatic URL redirection." The Petition presents two arguments in support of this theory, both of which fail.

First, the Petition contends that the alleged redirection results in the receipt of the partial profile information because, supposedly, the redirection "enabled the user to request news, product information and feature story pages from Server_B 24B—thus generating the 'partial profile'" that may later be received. Pet. at 44-45. However, this only confirms the problem with the Petition's theory discussed above—that the Petition's theory requires a "user to request news, product information [or] feature story pages from Server_B" following the alleged redirection in order for the alleged partial profile to be received. The Petition

simply provides no basis under which redirection "enabling" a user to take certain actions that, only if taken, will result in database server receiving a partial profile, can establish that the alleged redirection causes the receiving of the partial profile.

And in any event, the core premise underlying the Petition's first argument—that the redirection "enabled the user to request news, product information and feature story pages from Server_B 24B" (*id.* at 44)—is false. Specifically, Petitioner's expert admits that "the user in Rosenberg could have directly navigated to and accessed Server_B 24B via its web browser without accessing the frame-based webpage provided by Server_A 24A (for example by entering the URL for Server_B 24B into the web browser address bar)." Ex. 1002 ¶101. In this scenario, of course, the user would be able to "request news, product information and feature story pages from Server_B 24B" without any redirection from Server_A 24A.[3] *Cf.* Pet. at 44. Thus, the user can submit requests that result

[3] In this scenario, Server_B would transmit the alleged partial profile information to Rosenberg's database server 25 using a unique identifier assigned by Server_B, as Rosenberg makes clear in its description of how the system would operate if a user visited Server_B's website without Server_B having previously received a unique identifier from Server_A. *See* Ex. 1003 at 6:10-58, Figs. 4-5 (showing

in profile information being transmitted to database server 25 ***without*** the alleged redirection, and as discussed above, the user might not submit requests that result in profile information being transmitted to database server 25 from Server_A 24A even ***with*** the alleged redirection having taken place. Thus, the user is in the same position both before and after the alleged redirection, in the sense that the user might (or might not) request information from Server_B 24B in either scenario. Thus, the Petition's first argument, which appears to interpret the claim language as being satisfied so long as the redirection "enable[s] the user to" take action that will result in the partial profile received, fails by its own terms, because the alleged redirection does ***not*** enable the user to take action that will result in receiving the partial profile. Rather, the user was ***always*** enabled to take such action, even absent the alleged redirection.

Second, the Petition contends that the partial profile is received "as a result of" the alleged redirection because the redirection "causes the web browser to send the user's unique identification value ([e.g., Cookie ID # 123]) to Server_B 24B," which "can then use this unique user identification value to set a cookie for Server_B 24B using the same value." *Id.* at 45. The Petition alleges that this value

---

profile data being provided to database server 25 using a cookie ID "456" assigned by Server_B).

is "needed in order to receive the 'partial profile' from Server_B 24B and store it in association with that user." *Id.* at 45-46. Even if this were true, it would not change the fact that transmission of the user identification value will not result in receiving the "partial profile," because even after the alleged redirection, receiving the partial profile still requires intervening and unpredictable user interaction to first generate the partial profile.

Moreover, the Petition again cannot support the core premise underlying its second argument: that a "user identification value" received from Server_A is "needed" for database server 25 to "receive the 'partial profile' from Server_B 24B and store it in association with that user." *Id.* In fact, Rosenberg explicitly contradicts the Petition on this point. Rosenberg teaches that, in the case where a user visits the website hosted by Server_B 24B after the user visits Server_A 24A, but the unique identification information from Server_A 24A did "not reach" server 24B (e.g., "if the instruction to pass the unique identification information is defeated by programming instructions associated with the client computer 22, or … by some network interruption"), server 24B will assign its own unique identifier "j" to the user, which differs from the unique identifier "i" previously assigned by server 24A. *See* Ex. 1003 at 6:10-28. Rosenberg teaches that this "processing results in a database entry for the 'j' identification value," such that database server 25 can receive profile information from server 24B using the "j"

identification value, even though server 24A previously assigned that user an identification value of "i." *Id.* at 6:23-32. Subsequently, database 25 will "merge the previously separate 'i' and 'j' entries," such that the database is able to receive and store profile information regarding the user's visit to the webpage hosted by server 24B even though the alleged redirection from 24A did not provide the unique identifier "i" to server 24B. Thus, if server 24A previously assigned ID "123" to the user, and server 24B later assigned ID "456" to the user," database server 25 will associate profile information obtained from both servers 24A and 24B with both cookie IDs "123" and "456." *See id.* at 6:32-58, Figs. 4-5.

Accordingly, Rosenberg explicitly teaches that database server 25 is able to receive the alleged partial profile information from server 24B and store it in association with the user, even if Server_A is unable to transmit a unique identifier to Server_B via the alleged redirection. *See generally id.* at 6:10-58, Figs. 4-5. Simply put, Rosenberg does not need Server_A's unique identifier to be transferred to Server_B in order for a partial profile describing a user's content requests from Server_B to be received and stored in association with the user. Thus, the Petition's premise that "URL redirection … furnished Server_B 24B with the user identification value that database server needed in order to receive the 'partial profile' from Server_B 24B and store it in association with that user" (*see*

Pet. at 45-46) is false, and the Petition's theory based on that premise cannot succeed.

Thus, the Petition's second argument, which appears to interpret the claim language as being satisfied so long as the redirection is "needed" in order for the partial profile received, again fails by its ow r.n terms, because the alleged redirection is ***not*** needed to receive the partial profile. Instead, database server 25 is able to receive the partial profile and associate it with a user even if no redirection occurs.

VI. CONCLUSION

Patent Owner respectfully requests that the Board deny institution because the Petition fails to demonstrate that the cited prior art discloses or renders obvious any of the challenged claims.

Date: January 20, 2023

Respectfully submitted,

/Reza Mirzaie/

Reza Mirzaie, Reg. No. 69,138
Russ, August & Kabat
12424 Wilshire Blvd., 12th Floor
Los Angeles, CA 90025

Counsel for Patent Owner

CERTIFICATION REGARDING WORD COUNT

Pursuant to 37 C.F.R. §42.24(d), Patent Owner certifies that there are 5,201 words in the paper excluding the portions exempted under 37 C.F.R. §42.24(a)(1).

Date: January 20, 2023

/Reza Mirzaie/

Reza Mirzaie, Reg. No. 69,138
Russ, August & Kabat
12424 Wilshire Blvd., 12th Floor
Los Angeles, CA 90025

Counsel for Patent Owner

CERTIFICATE OF SERVICE (37 C.F.R. § 42.6(e)(1))

The undersigned hereby certifies that the above document was served on January 20, 2023, by filing this document through the Patent Trial and Appeal Case Tracking System as well as delivering a copy via electronic mail upon the following attorneys of record for the Petitioner:

Heidi L. Keefe (Reg. No. 40,673)
Philip E. Morton (Reg. No. 57,835)
Andrew C. Mace (Reg. No. 63,342)
Mark R. Weinstein (*pro hac vice* forthcoming)
COOLEY LLP
1299 Pennsylvania Ave. NW, Suite 700
Washington, DC 20004
hkeefe@cooley.com
pmorton@cooley.com
amace@cooley.com
mweinstein@cooley.com

Date: January 20, 2023

/Reza Mirzaie/

RUSS AUGUST & KABAT
12424 Wilshire Blvd., 12th Fl.
Los Angeles, CA 90025
(310) 826-7474

Reza Mirzaie
Reg. No. 69,138
Attorney for Patent Owner

Trials@uspto.gov
571-272-7822

Paper 9
Entered: April 7, 2023

UNITED STATES PATENT AND TRADEMARK OFFICE

BEFORE THE PATENT TRIAL AND APPEAL BOARD

META PLATFORMS, INC.,
Petitioner,

v.

ALMONDNET, INC.,
Patent Owner.

IPR2022-01436
Patent 8,244,582 B2

Before KEN B. BARRETT, THOMAS L. GIANNETTI, and LYNNE H. BROWNE, *Administrative Patent Judges.*

BROWNE, *Administrative Patent Judge*.

DECISION
Granting Institution of *Inter Partes* Review
35 U.S.C. § 314

I. INTRODUCTION

Petitioner, Meta Platforms, Inc., filed a Petition (Paper 2, "Pet.") requesting *inter partes* review of claims 11, 13–16, 19, and 20 of U.S. Patent No. 8,244,582 B2 (Ex. 1001, "the '582 patent"). Patent Owner, AlmondNet, Inc., filed a Preliminary Response (Paper 8, "Prelim. Resp.").

Under 35 U.S.C. § 314(a), an *inter partes* review may not be instituted unless the information presented in the Petition and any response thereto shows "there is a reasonable likelihood that the petitioner would prevail with respect to at least 1 of the claims challenged in the petition." Considering the Petition, the arguments presented in the Preliminary Response, as well as all supporting evidence, we determine that Petitioner has demonstrated a reasonable likelihood of prevailing with respect to at least one of the challenged claims, and thus, we institute an *inter partes* review of all challenged claims on all presented challenges.

A. *Real Parties in Interest*

Petitioner identifies itself as the real party-in-interest in this proceeding. Pet. 8. Patent Owner identifies itself as the real party-in-interest. Paper 3, 1.

B. Related Matters

The parties identify *AlmondNet, Inc. and Intent IQ, LLC v. Meta Platforms, Inc.*, 6:21-cv-00896 (WDTX); *AlmondNet, Inc., et al. v. Microsoft Corporation*, 6:21-cv-00897 (WDTX); *AlmondNet, Inc., et al. v. Amazon.com, Inc., et al.*, 6:21-cv-00898 (WDTX); *AlmondNet, Inc. v. Samsung Electronics Co.*, 6-21-cv-00891 (WDTX); *AlmondNet, Inc. v. Roku, Inc.*, 6-21-cv-00876 (WDTX); *AlmondNet, Inc. v. Oath Holdings Inc.*, 1-19-cv-00247 (DDE) (terminated); *AlmondNet, Inc. v. Roku, Inc.*, 1:22-cv-01540 (DDE); *AlmondNet, Inc. et al. v. Meta Platforms, Inc.*, 4:22-cv-08911

(NDCA); and *AlmondNet, Inc. et al. v. Samsung Electronics Co., Ltd. et al.*, 3:22-cv- 07515 (NDCA) as civil litigations involving the '582 patent. Pet. 7; Paper 3, 1; Paper 6, 1. The parties also identify *Samsung Electronics Co. v. AlmondNet, Inc.*, IPR2022-01260 (PTAB) (denied); *Yahoo! Inc. v. AlmondNet, Inc.*, CBM2017-00052 (PTAB) (denied); and *Amazon.com, Inc. et al. v. AlmondNet, Inc.*, IPR2022-01455 (PTAB) as proceedings involving the '582 patent. Pet. 8–9; Paper 3, 1; Paper 6, 1.

C. The '582 patent

The '582 patent relates to a mercantile method directed to brokerage of attributes of information. Ex. 1001, 1:29–31.

> The method includes the steps of: from a user, receiving a transaction having therein a first partial profile; using the first partial profile, searching a databank having a plurality of second partial profiles, wherein is included in said data bank at least one null profile so that said searching will always yield at least one proximate second partial profile to the first partial profile; and between the user and the databank, contracting: (I) for the databank to own or represent a right to a first mutually agreed portion of the first partial profile, and substantially thereafter said databank incorporating the agreed portion of the first profile into at least one second partial profile; or (II) for the user to own or represent a right to a second mutually agreed portion of at least one said proximate second partial profile, and substantially thereafter the databank transmitting to the user the second mutually agreed portion of the second profile.

Id. at code (57).

D. Illustrative Claim

Petitioner challenges claims 11, 13–16, 19, and 20. Pet. 10. Claim 11 is an independent claim.

Claim 11 is reproduced below.

> 11. A tangible, non-transitory data storage medium comprising indicia of instructions for a processor to perform a method of

> collecting profiles of Internet-using entities, the method comprising:
>
> (a) electronically receiving at a programmed computer system coupled to a global computer network, from at least one server controlled by one of a plurality of unaffiliated third parties, a partial profile of an entity that uses a user computer coupled to the global computer network and accessing a website, which partial profile is available to one of the third parties and contains at least one profile attribute related to the entity, and automatically with the computer system storing the received partial profile;
>
> (b) wherein receiving the partial profile is achieved as a result of automatic electronic URL redirection from a portion of a page of the website accessed by the user computer;
>
> (c) automatically with the computer system electronically adding the received partial profile to a maintained profile believed to be related to the same entity:
>
> (d) automatically with the computer system generating and storing an electronic record of which of the plurality of unaffiliated third parties contributed to the maintained profile particular profile attributes;
>
> (e) wherein the maintained profile, including the added partial profile, comprises data used in targeting third party advertisements to the user computer over the global computer network.

Ex. 1001, 17:45–18:8.

E. Asserted Grounds of Unpatentability

Petitioner asserts the following grounds of unpatentability:

Claim(s) Challenged	35 U.S.C. §	Reference(s)/Basis
11, 13–15, 19, 20	103	Rosenberg,[1] Zeff,[2] Sterne[3]
16	103	Rosenberg, Zeff, Sterne, Farber[4]
11, 13–15, 19, 20	103	Rosenberg, Zeff, Sterne, Zeff, Merriman[5]
16	103	Rosenberg, Zeff, Sterne, Zeff, Merriman, Farber

Pet. 10. In addition to the references listed above, Petitioner relies on the Declaration of Christopher M. Schmandt (Ex. 1002).

II. ANALYSIS

A. Level of Ordinary Skill in the Art

In determining the level of skill in the art, we consider the type of problems encountered in the art, the prior art solutions to those problems, the rapidity with which innovations are made, the sophistication of the technology, and the educational level of active workers in the field. *Custom Accessories, Inc. v. Jeffrey-Allan Indus. Inc.*, 807 F.2d 955, 962 (Fed. Cir. 1986); *Orthopedic Equip. Co. v. U.S.*, 702 F.2d 1005, 1011 (Fed. Cir. 1983).

Petitioner contends that a person of ordinary skill in the art at the time of the invention of the '582 patent "would have possessed a bachelor's degree in electrical engineering or computer science, and two years of work experience in the field of network-based computer systems, such as systems

---

[1] Rosenberg et al., U.S. Patent No. 6,073,241, issued June 6, 2000 (Ex. 1003) ("Rosenberg").
[2] Zeff, R., et al., *Advertising on the Internet*, John Wiley & Sons, Inc., pp. 1–27, 89–109, 1997 (Ex. 1004) ("Zeff").
[3] Sterne, Jim, *What Makes People Click: Advertising on the Web*, Que Corporation, pp. 1–41, 145–256, 375–386, 1997 (Ex. 1005) ("Sterne").
[4] Farber et al., U.S. Patent No. 5,978,791, issued Nov. 2, 1999 (Ex. 1007) ("Farber").
[5] Merriman et al., U.S. Patent No. 8,566,154 B2, issued Oct. 22, 2013 (Ex. 1008) ("Merriman").

for sending and receiving information over local networks and wide area networks (such as the Internet or World Wide Web)." Pet. 12. (citing Ex. 1002 ¶¶ 10–14). Petitioner asserts further that "[a] person could also have qualified with more formal education and less technical experience, or vice versa." *Id.* Patent Owner does not challenge this definition of the level of skill at this time. Prelim. Resp. 4.

For purposes of this Decision, we also adopt Petitioner's proposal as reasonable and consistent with the prior art. *See Okajima v. Bourdeau*, 261 F.3d 1350, 1355 (Fed. Cir. 2001) (the prior art may reflect an appropriate level of skill in the art).

B. Claim Construction

We apply the same claim construction standard used in district court actions under 35 U.S.C. § 282(b), namely that articulated in *Phillips v. AWH Corp.*, 415 F.3d 1303 (Fed. Cir. 2005) (en banc). *See* 37 C.F.R. § 42.100(b) (2021). In applying that standard, claim terms generally are given their ordinary and customary meaning as would have been understood by a person of ordinary skill in the art at the time of the invention and in the context of the entire patent disclosure. *Phillips*, 415 F.3d at 1312–13. "In determining the meaning of the disputed claim limitation, we look principally to the intrinsic evidence of record, examining the claim language itself, the written description, and the prosecution history, if in evidence." *DePuy Spine, Inc. v. Medtronic Sofamor Danek, Inc.*, 469 F.3d 1005, 1014 (Fed. Cir. 2006) (citing *Phillips*, 415 F.3d at 1312–17).

Petitioner states that it "does not believe an express claim construction is necessary at this time for this IPR" and Patent Owner states that it "agrees that claim construction is not necessary to resolve any issue for institution

and that the plain and ordinary meaning of the claim language should be applied." *See* Pet. 13 (citing Ex. 1002 ¶ 37); Prelim. Resp. 5.

We disagree. Both parties rely on an implicit interpretation of the claim language "as a result of automatic electronic URL redirection," and construction of this terminology is necessary to our determination as to whether trial should be instituted in this proceeding.

Patent Owner's implicit interpretation of this claim language precludes intervening user interaction in the time period between redirection and receipt of profile information. Prelim. Resp. 14. Specifically, Patent Owner contends that the claim language at issue precludes Rosenberg's disclosure of a system wherein partial profile information is created after automatic URL redirection and then sent to a receiving computer system. *See id.* at 14–20.

The Petitioner's implicit interpretation of the claim language "as a result of automatic electronic URL redirection" does not preclude such intervening action as evidenced by Petitioner's assertion that Rosenburg meets this claim language. Pet. 42–46. The Petition advances two theories for how Rosenburg discloses this limitation and both of these theories rely on actions that occur after URL redirection. *Id.*

On the record before us, we determine that Patent Owner's implicit definition of the claim language "as a result of automatic electronic URL redirection" is overly narrow. The claim does not preclude intervening user action between the time of URL redirection and receipt of the partial profile. Ex. 1001, 17:45–18:8. To the extent, if any, that the Specification of the '582 patent describes such a preclusion, we decline to read limitations from the Specification into the claims.

C. Overview of the Asserted Prior art

1. Rosenberg

Rosenberg is a U.S. Patent for an "Apparatus and Method for Tracking World Wide Web Browser Requests Across Distinct Domains Using Persistent Client-side State" that issued June 6, 2000. Ex. 1003, codes (45), (54). Rosenberg describes a method that "allows a web browser to be passively tracked so that content preferences and interests associated with the individual using the web browser can be identified." *Id.* at 3:25–28. In particular, the method "allows all cooperating servers to share information via a database" in which "persistent client-side state information can be combined with authentication data in the database to provide demographic information and passive tracking information regarding the individual using the web browser." *Id.* at 3:28–32. "This information can be used to provide responses tailored toward the individual using the web browser" and also "would allow editors and advertisers to tailor their content to users." *Id.* at 3:35–36, 3:7–8.

Rosenberg's method is performed by the system shown in Figure 1 reproduced below:

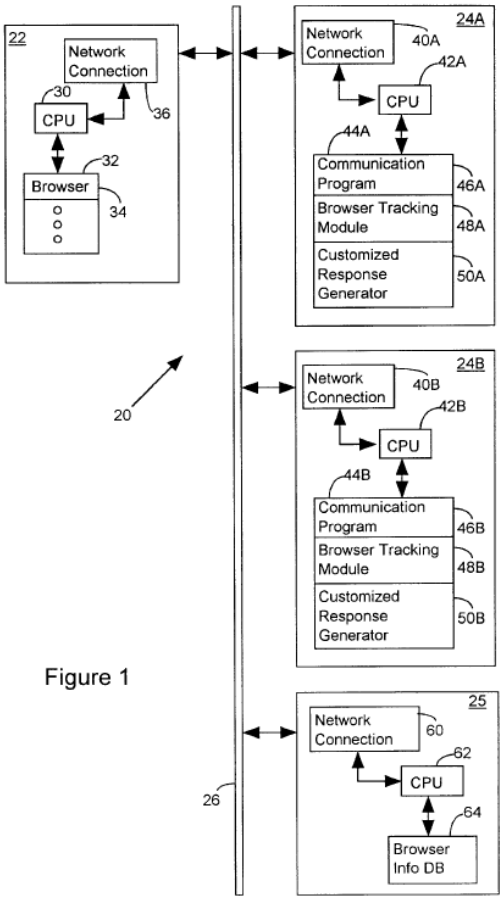

Figure 1

Figure 1 shows computer network 20 including client computer 22, server computer 24A, server computer 24B (although computer network 20 can have many server computers such as server computers 24A–24N), and database server computer 25. Ex. 1003, 3:66–4:24. "The computer network 20 may be considered as a simplified representation of the WWW" in which "a web browser is used to communicate with" remote server computers 24A, 24B. *Id.* at 4:1–2, 4:11–12. Server computers 24A, 24B cooperatively observe a common protocol that "relies upon a common database of information, such as that available in" database server computer 25, to track web browsers across distinct domains. *Id.* at 4:52–59.

Rosenberg's Figure 2 is reproduced below:

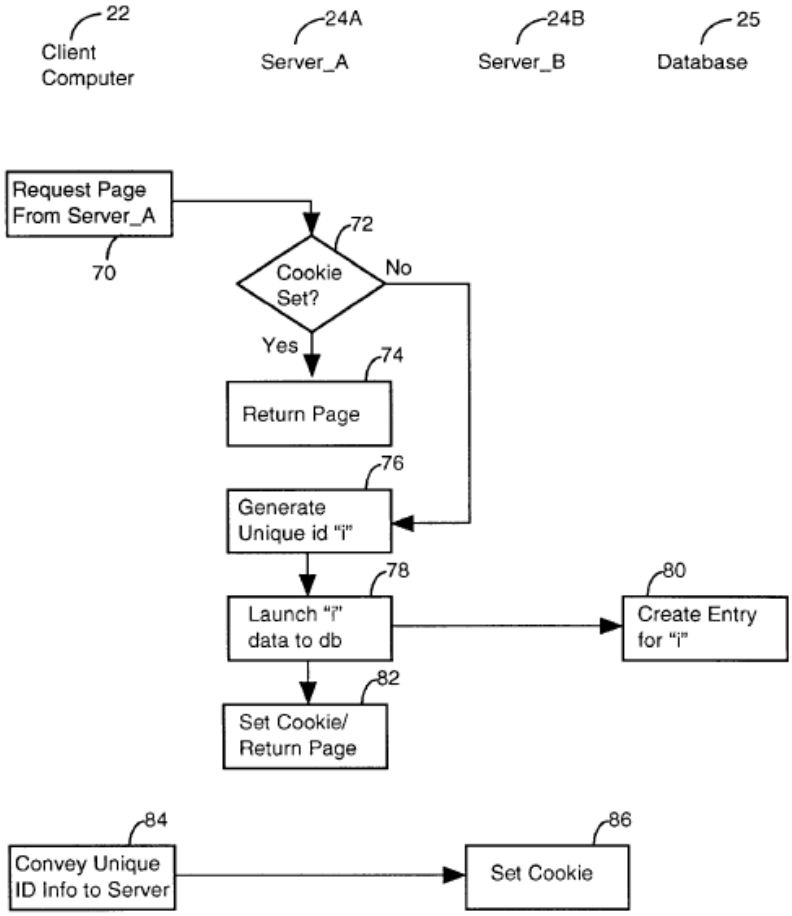

Figure 2

Figure 2 shows operations performed relative to client computer 22, server computer 24A (Server_A), server computer 24B (Server_B), and database server computer 25 (Database 25). Ex. 1003, 4:65–5:1. In first step 70, client computer 22's browser requests a page of information from a first server so that "Server 24A receives the request and determines if it has set a cookie for this browser" via step 72. *Id.* at 5:1–6. If there is such a cookie, "the requested page is simply returned" in step 74, and if not, "Server 24A generates a unique identification value 'i'" in step 76. *Id.* at

5:7–9. The unique identification value "i" "is then launched to a database" in step 78 so that Database 25 creates an entry for unique identification value "i" in step 80. *Id.* at 5:9–12. Unique identification value "i" "is accessible by each server computer 24 in the network" and a cookie is set "corresponding to the unique identification value and return . . . page of the requested information" in step 82 (detailed in steps 84, 86). *Id.* at 5:14–19. The cookie is the "persistent client-side state information" and "the return[] page includes instructions to convey the unique identification information to additional server computers that are observing the same protocol" in step 84. *Id.* at 5:19–24. Thus, client computer 22 receives the return page from Server 24A with a header that "includes the cookie with the unique identification information" and "an instruction to convey the unique identification information to each server in the network of servers that is operating in accordance with" computer network 20. *Id.* at 5:24–31.

Rosenberg's Figure 3 reproduced below:

Cookie ID #	Last Visit to Server_A	Content Requested			Last Visit to Server_B	Content Requested		
		News	Product Info	Feature Story		News	Product Info	Feature Story
123	4-9-96;18:25	2	5	0	7-4-96;16:23	1	7	3

Figure 3

Figure 3 shows "a data structure that may be used to store information regarding the interaction between" a browser and Server 24. Ex. 1003, 5:55–57. "[T]he information associated with this data structure is stored in the access logs of each" server computer 24 and is passed to the database server computer 25, "typically at the end of a day or at other times when network traffic is light." *Id.* at 5:57–62. In the first column, a "cookie ID #"

is indicative of the unique identification number, which is separate for an "entry for server A and for server B." *Id.* at 5:63–66. "In particular, the data structure tracks the content requested during the last visit to the server A" and content requested during the last visit to server B. *Id.* at 5:66–6:5. "In this example, the user of the web browser requested two pages of news and five page of product information" in the visit to server A. *Id.* at 6:2–4.

Rosenberg explains that a browser tracking module "creates a page and embeds within it HTML that references a specific URL on another server computer, say Server computer B 24B, which is referred to as B-correlate" in which the URL has a form that includes "i'" "where i' is an encoding of the identifier 'i' (the unique identification information)." *Id.* at 8:12–17. The browser tracking module "delivers an HTTP header that sets the cookie to i and returns any additional data that is required" and "[t]here are several ways in which an HTML reference to another site can be embedded in a page." *Id.* at 8:30–35. Rosenberg further discloses:

> An HTML cross-site reference with a frame tag may also be used. With this method, the page contains frames, one of which references a page on another site. For example,
>
> <FRAMESET COLS="12">
>
> < FRAME SRC = "http://www.search.com/cnet.cgi?3676778">
>
> <FRAME SRC=column2.html">
>
> </FRAME>
>
> An advantage of this approach is that the request will be made automatically, without the need for human action.

Id. at 8:55–65.

2. Zeff

Zeff is a book titled "Advertising on the Internet." Ex. 1004. Zeff discloses that "Firefly" is a technology that is "known as a smart or

intelligent agent [which] combines information provided through registration with the capability to make inferences based on user tastes and preferences pooled from a group." *Id.* at 105.[6] Zeff discloses:

> When a user joins the Firefly network, he or she is issued a Firefly Passport. Users must log in each time they return to Firefly's site. Firefly uses this to track a user's actions and learn[s] the user's preferences; the Passport stores demographic and preference information, and follows the user on any Firefly-enhanced site that he or she visits. Nearly a million consumers registered for a Firefly Passport in 1996.
>
> Any site can be enhanced to be part of the Firefly network. For an advertiser, this means going beyond general demographic targeting and delivering ads to individuals who have indicated (through their actions) an interest in the product.

Id. at 105–106.

3. Sterne

Sterne is a book titled "What Makes People Click: Advertising on the Web." Ex. 1005. Sterne describes a technology called "Passport" that is created by "Firefly" and states:

> Think of them as the Secretary of State. They know who's who and they keep all of the basic profile information in Firefly Central which they describe on their site as "a rapid cache of Firefly Passports which can be used by any site to recognize existing Passport holders and exchange Passport profiles with other sites."

Id. at 251.[7]

---

[6] Petitioner refers to its added page numbers to Zeff. We refer to the original page numbers of Zeff.

[7] Petitioner refers to its added page numbers to Sterne. We refer to the original page numbers of Sterne.

4. Farber

Farber is a U.S. Patent for "Data Processing System Using Substantially Unique Identifiers to Identify Data Items, Whereby Identical Data Items Have the Same Identifiers," that issued on November 2, 1999. Ex. 1007, codes (45), (54). Farber discloses that "when a processor (or some location) obtains a data item from another location in the DP [data processing] system, it is possible that this obtained data item is already present in the system (either at the location of the processor or at some other location accessible by the processor) and therefore a duplicate of the data item is created." *Id.* at 2:46–52. Farber describes "mechanisms" that depend on underlying data management mechanisms to create, copy, read, and delete data items in a "True File registry" which includes a "primitive mechanism" called "Calculate True Name." *Id.* at 12:27–54. "A True Name is computed using a function, MD, which reduces a data block B of arbitrary length to a relatively small, fixed size identifier, the True Name of the data block, such that the True Name of the data block is virtually guaranteed to represent the data block B and only data block B." *Id.* at 12:55–60. Farber further discloses a "mechanism for assimilating a data item" into a file system, in which "[t]he purpose of this mechanism is to add a given data item to the True File registry" and "[i]f the data item already exists in the True File registry[]," the duplicate will be discovered and eliminated. *Id.* at 14:41–47.

5. Merriman

Merriman is a U.S. Patent for "Network for Distribution of Re-Targeted Advertising" that issued on October 22, 2013. Ex. 1008, codes (45), (54). Merriman discloses:

> To implement re-targeted advertising, a list of actions of each visitor at each advertiser's site is collected and reported back to the advertisement server. In one embodiment, the advertiser's web site reports activity in real time. In another embodiment, the advertiser's web site keeps a user log file of visitor activity and reports the user log file back to the advertisement server. Reporting of user log files may be by email or any other file transfer technique back to the advertisement server, where the user log files and other user data are merged.

Id. at 3:35–44.

D. Principles of Law

A petition must show how the construed claims are unpatentable under the statutory grounds it identifies. 37 C.F.R. § 42.104(b)(4). Petitioner bears the burden of demonstrating a reasonable likelihood that it would prevail with respect to at least one challenged claim for a petition to be granted. 35 U.S.C. § 314(a).

A claim is unpatentable under § 103(a) if the differences between the claimed subject matter and the prior art are such that the subject matter, as a whole, would have been obvious at the time the invention was made to a person having ordinary skill in the art to which said subject matter pertains. *KSR Int'l Co. v. Teleflex Inc.*, 550 U.S. 398, 406 (2007). The question of obviousness is resolved on the basis of underlying factual determinations, including (1) the scope and content of the prior art; (2) any differences between the claimed subject matter and the prior art; (3) the level of skill in the art; and (4) when in evidence, objective indicia of non-obviousness (i.e., secondary considerations).[8] *Graham v. John Deere Co.*, 383 U.S. 1,

[8] Patent Owner does not present any objective evidence of nonobviousness at this stage of the proceeding.

17–18 (1966). We analyze the asserted grounds with these principles in mind.

E. Obviousness under 35 U.S.C. § 103

1. Obviousness of Claims 11, 13–16, 19, and 20 Over Rosenberg, Zeff, and Sterne

Petitioner contends that claims 11, 13–15, 19 and 20 are unpatentable over the combined teachings of Rosenberg, Zeff, and Sterne. Pet. 16–63. Patent Owner disputes Petitioner's contentions. Prelim. Resp. 5–25.

a. Independent Claim 11

i. Preamble - A tangible, non-transitory data storage medium comprising indicia of instructions for a processor to perform a method of collecting profiles of Internet-using entities, the method comprising:

Petitioner asserts that "Rosenberg discloses the claimed 'method of collecting profiles of Internet using entities.'"[9] Pet. 16. Petitioners asserts that "[t]he 'Internet-using entities' for claim 11 correspond in Rosenberg to users who access the Internet using web browsers on client computers." *Id.* at 18. Petitioner asserts further that Rosenberg's "database server 25 collects two types of user profile information: (1) tracked user activity and (2) demographic information." *Id.* (citing Ex. 1002 ¶¶ 80–83).

Patent Owner does not dispute Petitioner's assertions. *See generally*, Prelim. Resp.

ii. Limitation (a) - electronically receiving at a programmed computer system coupled to a global computer network, from at least one server controlled by one of a plurality of unaffiliated third parties, a partial profile of an

[9] Emphasis in this quote from the Petition, and in other Petition quotes is omitted here and throughout this Decision.

> *entity that uses a user computer coupled to the global computer network and accessing a website, which partial profile is available to one of the third parties and contains at least one profile attribute related to the entity, and automatically with the computer system storing the received partial profile;*

Petitioner provides a table (i.e., claim chart) outlining its assertions of how claim limitation (a) reads on Rosenburg. Pet. 21–22. We have reviewed this table, but do not reproduce it as Patent Owner does not dispute Petitioner's assertion that limitation (a) reads on Rosenburg. *See generally*, Prelim. Resp.

iii. Limitation (b) - wherein receiving the partial profile is achieved as a result of automatic electronic URL redirection from a portion of a page of the website accessed by the user computer;

Petitioner asserts that Rosenburg meets limitation (b). *See* Pet. 42–46. In particular, Petitioner asserts that "[t]he 'automatic URL redirection' in Rosenberg occurs when the web browser is redirected to Server_B 24B when it encounters the <FRAME SRC> attribute in the webpage provided by Server_A 24A . . . which directs the browser to obtain a webpage from Server_B 24B at the URL specified in the attribute." *Id.* at 43 (citing Ex. 1002 ¶ 125). According to Petitioner, "[t]his qualifies as 'automatic URL redirection' because the <FRAME SRC> attribute causes the web browser – which is currently accessing the webpage provided by Server_A 24A – to contact a server at a different location (Server_B 24B) to request a webpage from the specified URL." *Id.* at 42–43 (citing Ex. 1003, 8:56–58, 5:36–38).

Petitioner asserts that "[t]he automatic URL redirection in Rosenberg [is] 'from a portion of a page of the website accessed by the user computer,' with the 'portion of a page of the website' corresponding to a portion of a page of the website provided by Server_A 24A ('the website') accessed by the user computer." Pet. 43. Petitioner asserts further that "receipt of the partial profile from Server_B 24B [is] 'achieved as a result of' the automatic URL redirection" because URL redirection from Server_A 24A causes the user's browser to contact and access the webpage from Server_B 24B which in turn enables the user to request news, product information, and feature story pages from Server_B 24 B. *Id.* According to Petitioner, these actions generate the claimed partial profile. *Id.* (citing Ex. 1003, Fig. 3).

Alternatively, Petitioner asserts that "Rosenberg discloses the 'achieved as a result of' limitation in another way." Pet. 45. Petitioner asserts that "the user activity received at database server 25 is stored based on the unique user identification value, for example, Cookie ID #123 in Figure 3." *Id.* (citing Ex. 1003, 5:63–65). Petitioner asserts further that "[t]his unique identification value is critical to Rosenberg because it allows database server 25 to store and retrieve tracking information on a user-by-user basis." *Id.* Petitioner asserts that "as shown in Figure 3, database server 25 can record tracking activity for the same user for Server_A 24A and Server_B 24B." *Id.* (citing Ex. 1002 ¶ 122). According to Petitioner,

> The ability of Server_B 24B to send "partial profile" information to database server 25 was thus achieved "as a result of" the URL redirection, because it was that URL redirection that furnished Server_B 24B with the user identification value that database server 25 needed in order to receive the "partial profile" from Server_B 24B and store it in association with that user.

Pet. 45–46 (citing Ex. 1003, Fig. 3, 5:63–65).

Noting that "the Petition relies exclusively on Rosenberg for an alleged disclosure of 'electronically receiving . . . a partial profile . . . wherein receiving the partial profile is achieved as a result of automatic electronic URL redirection," Patent Owner contends that "the Petition sets forth no valid theory or understanding under which 'receiving the partial profile' could be fairly understood to be 'a result of automatic URL redirection.'" Prelim. Resp. 5 (footnote omitted), 14. Specifically, Patent Owner contends that "to the extent any "partial profile" is received ***after*** the alleged redirection, that reception is caused by intervening user interaction in the time period between the alleged redirection and the reception of the profile information.'" *Id.* at 14 (citing Pet. 44). Patent Owner notes that "the Petition does not contend that the user ***must*** request news, product information or feature story pages from Server_B following the alleged redirection." *Id.* at 15. Thus, according to Patent Owner,

> The Petition's theory here acknowledges that, at the time of the alleged redirection, the partial profile information does not yet exist, and can only exist in the future (such that it can only be later received by database server 25) ***if*** the user decides to "request news, product information and feature story pages from Server_B—thus generating the 'partial profile.'"

Id. (citing Pet. 44). Patent Owner contends that "[t]he Petition provides no explanation for why Server_A's alleged redirection to Server_B can be fairly said to 'result' in database server 25 receiving profile data, where even after the alleged redirection the user will likely ***not*** take the steps necessary for database server 25 to receive the profile information." *Id.* at 15–16.

Patent Owner contends that "[t]he Petition's theory further fails under any other reasonable interpretation of 'receiving . . . as a result of automatic URL redirection,' because the alleged redirection is neither a necessary nor a

sufficient condition for Rosenberg's database server 25 to receive the alleged partial profile." Prelim Resp. 18. Patent Owner contends that "[t]he alleged redirection is not a sufficient condition for reception of the 'partial profile,' because . . . the redirection can (and likely will) occur ***without*** the alleged 'partial profile; ever being generated or received by Rosenberg's database server 25." *Id.* Patent Owner contends further that "[t]he alleged redirection is also not a necessary condition for database server 25 to receive the alleged 'partial profile,'" because "[a]s the declaration in support of the Petition acknowledges, it is 'possible that the user in Rosenberg could have directly navigated to and accessed Server_B 24B via its web browser ***without*** accessing the frame-based webpage provided by Server_A 24A." *Id.* at 18–19 (citing Ex. 1002 ¶ 101).

iv. Limitation (c) - automatically with the computer system electronically adding the received partial profile to a maintained profile believed to be related to the same entity:

Petitioner asserts that Rosenberg meets this limitation. Pet. 46–47. Specifically, Petitioner asserts that "Rosenberg discloses 'a maintained profile' in the form of a profile at database server 25 about the user (the "entity"), which includes information about the user's previous visits to servers 24, as well as demographic and other information about the user" and that "Rosenberg discloses 'electronically adding the received partial profile to a maintained profile,' because the user tracking information received from Server_B 24B ('received partial profile') is added to the maintained profile for the user stored at database server 25." *Id.* at 46 (citing Ex. 1003, 3:30–37, 7:1–40. Fig. 7).

Patent Owner does not dispute Petitioners assertions regarding limitation (c). *See generally*, Prelim. Resp.

v. Limitation (d) - automatically with the computer system generating and storing an electronic record of which of the plurality of unaffiliated third parties contributed to the maintained profile particular profile attributes;

Petitioner asserts that Rosenberg meets limitation (d). Pet. 48. Specifically, Petitioner asserts that when Rosenberg's "database server 25 receives user tracking information from an individual server 24, it records which server provided the information." *Id.* Petitioner asserts further that "Rosenberg confirms that database server 25 could also store 'additional entries for a large number of servers.'" *Id.* Petitioner reasons that it "would have been obvious that database server 25 stores 'an electronic record of which of the plurality of unaffiliated third parties contributed to the maintained profile particular profile attributes.'" *Id.* (citing Ex. 1002 ¶ 128).

Patent Owner does not dispute Petitioner's assertions and reasoning regarding limitation (d). *See generally*, Prelim. Resp.

vi. Limitation (e) - wherein the maintained profile, including the added partial profile, comprises data used in targeting third party advertisements to the user computer over the global computer network.

Petitioner asserts that Rosenberg, Zeff, and Stern disclose or suggest limitation (e). Pet. 49–53. In particular, Petitioner asserts that "Rosenberg discloses and renders obvious that 'the maintained profile' of the user – including the newly-added user tracking information ('the added partial profile') – can be used to target advertisements to the user computer." *Id.* at 49. Petitioner asserts further that "Rosenberg can also target based on demographic information in the maintained profile" and thus, discloses a "partial profile, [that] 'comprises data used in targeting third-party advertisements to the user computer over the global computer network.'" *Id.*

at 50–51. Petitioner admits that "Rosenberg does not expressly state that its 'customized responses' contain 'target[ed] third-party advertisements,'" but asserts that "this would have been obvious based on Rosenberg," because "Rosenberg explains that one of the purposes of his invention is to 'allow editors and advertisers to tailor their content to users.'" *Id.* at 51 (citing Ex. 1003, 3:6–8).

Petitioner also asserts that "[t]his would also have been obvious based on Rosenberg in further view of Zeff and Stern." Pet. 51–52. Petitioner asserts that "Zeff and Sterne are analogous references describing the Firefly Passport system which provides a profile sharing service similar to database server 25 in Rosenberg" and that "Zeff and Sterne explain that Firefly Passports can be shared with websites and used for targeting third-party advertisements. *Id.* at 52 (citing Ex. 1002 ¶ 109–11, 113; Ex. 1004, 57–58; Ex. 1005, 171–172). Petitioner reasons that "[i]t therefore would have been obvious to implement Rosenberg for 'targeting third-party advertisements,' such as advertisements for products or services provided by third parties." *Id.* (citing Ex. 1002 ¶ 132). Petitioner provides further reasoning in support of the proposed combination on pages 52–53 of the Petitioner.

Patent Owner does not dispute Petitioner's assertions and reasoning regarding limitation (e).

vii. Conclusion For Claim 11

Regarding contested limitation (b), as discussed in Section II.B above, we do not agree with Patent Owner that this claim limitation precludes intervening user action between automatic URL redirection and receipt of the partial profile. Further, we do not agree with Patent Owner that a reference relied upon to meet a limitation must meet that limitation under every circumstance. *Unwired Planet, LLC v. Google Inc.*, 841 F.3d 995, 1002 (Fed. Cir. 2016) ("[C]ombinations of prior art that sometimes meet the claim elements are sufficient to show obviousness."). By arguing that in Rosenberg's system the user will likely not take the steps necessary to create a partial profile, Patent Owner essentially admits that in some instances the user will take these steps (i.e., requesting news, production information, or feature story pages) such that a partial profile is created. *See* Prelim. Resp. 14–16. It is in those instances where the user takes the steps needed to create a partial profile that Rosenberg meets the claim language at issue. For this reason, Petitioner has sufficiently demonstrated that Rosenberg discloses limitation (b).

We have reviewed the evidence and testimony of record for the preamble and limitations (a) and (c)–(e). On the record before us, we determine that Petitioner has demonstrated a reasonable likelihood of prevailing for independent claim 11.

b. Dependent Claims 13–15, 19, and 20

Petitioner asserts that claims 13–15, 19, and 20 are unpatentable over the combined teachings of Rosenberg, Zeff, and Sterne. Pet. 53–63. Patent Owner does not dispute Petitioner's assertions. *See generally*, Prelim. Resp. We have reviewed the Petitioner's evidence including the testimony in support of Petitioner's assertions. On the record before us, we determine

that Petitioner has demonstrated a reasonable likelihood of prevailing for claims 13–15, 19, and 20.

2. Obviousness of Claim 16 Over Rosenberg, Zeff, Sterne, and Farber

Petitioner asserts that claim 16 is unpatentable over the combined teachings of Rosenberg, Zeff, Sterne, and Farber. Pet. 63–68. Patent Owner does not dispute Petitioner's assertions. We have reviewed Petitioner's evidence including the testimony in support of Petitioner's assertions. On the record before us, we determine that Petitioner has demonstrated a reasonable likelihood of prevailing for claim 16.

3. Obviousness of Claims 11, 13–15, 19, and 20 Over Rosenberg, Zeff, Sterne, and Merriman

As we have already determined that Petitioner has demonstrated a reasonable likelihood of prevailing in showing that claims 11, 13–15, 19, and 20, are unpatentable over the combined teachings of Rosenberg, Zeff, and Sterne, it follows, in this case, that Petitioner has also demonstrated that these claims are unpatentable over that combination and Merriman.

4. Obviousness of Claim 16 Over Rosenberg, Zeff, Sterne, Merriman, and Farber

As we have already determined that Petitioner has demonstrated a reasonable likelihood of prevailing in showing that claim 16 is unpatentable over the combined teachings of Rosenberg, Zeff, Sterne, and Farber, it follows, in this case, that Petitioner has also demonstrated that this claim is unpatentable over that combination and Merriman.

III. CONCLUSION

After considering the evidence and arguments presented in the Petition and the Preliminary Response, we determine that Petitioner has demonstrated a reasonable likelihood of prevailing with respect to at least

one of the challenged claims, and thus, we institute an *inter partes* review of all challenged claims on all presented challenges. 37 C.F.R. § 42.108(c); *SAS Inst.*, 138 S. Ct. 1348 at 1359–60; *PGS Geophysical AS v. Iancu*, 891 F.3d 1354, 1360 (Fed. Cir. 2018) (interpreting the statute to require "a simple yes-or no institution choice respecting a petition, embracing all challenges included in the petition").

At this stage of the proceeding, the Board has not made a final determination as to the patentability of any challenged claim or any underlying factual and legal issues.

IV. ORDER

In consideration of the foregoing, it is hereby

ORDERED that, pursuant to 35 U.S.C. § 314(a), an *inter partes* review of claims 11–16, 19, and 20 of U.S. Patent No. 8,244,582 B2 is instituted with respect to all the grounds set forth in the Petition; and

FURTHER ORDERED that, pursuant to 35 U.S.C. § 314(c) and 37 C.F.R. § 42.4(b), *inter partes* review of U.S. Patent No. 8,244,582 B2 shall commence on the entry date of this Order, and notice is hereby given of the institution of a trial.

FOR PETITIONER:

Heidi Keefe
Phillip Morton
Andrew Mace
COOLEY LLP
hkeefe@cooley.com
pmorton@cooley.com
amace@cooley.com

FOR PATENT OWNER:

Reza Mirzaie
Jonathan Link
RUSS AUGUST & KABAT LAW
rmirzaie@raklaw.com
jlink@raklaw.com

UNITED STATES PATENT AND TRADEMARK OFFICE

BEFORE THE PATENT TRIAL AND APPEAL BOARD

META PLATFORMS, INC.,
Petitioner,

v.

ALMONDNET, INC.,
Patent Owner.

IPR2022-01436
Patent 8,244,582

PATENT OWNER'S RESPONSE

TABLE OF CONTENTS

I. INTRODUCTION 1

II. OVERVIEW OF THE ’582 PATENT 3

III. LEVEL OF ORDINARY SKILL IN THE ART 5

IV. CLAIM CONSTRUCTION 6

V. THE PETITION FAILS TO ALLEGE HOW ANY NON-“FOOLISH” COMBINATION OF ROSENBERG WITH ZEFF AND STERNE WOULD OPERATE. 6

A. Overview of the Petition’s proposed combination 9

B. The Petition only explains how its proposed combination would apply to exactly two participating servers in Rosenberg, which Petitioner’s expert admitted a POSITA would not have been motivated to implement. 14

C. The Petition’s combination of Rosenberg with Firefly would have not been obvious for additional reasons. 20

VI. THE PETITION’S COMBINATION DOES NOT RECEIVE A PARTIAL PROFILE “AS A RESULT” OF URL REDIRECTION 26

A. Background of Rosenberg 27

B. The Petition’s theory 34

C. The Petition fails to explain how “receiving the partial profile” is “achieved as a result of automatic URL redirection.” 35

VII. CONCLUSION 39

TABLE OF AUTHORITIES

Cases

ActiveVideo Networks, Inc. v. Verizon Commc'ns, Inc.,
694 F.3d 1312 (Fed. Cir. 2012) 6, 20

ADT LLC v. Vivint, Inc.,
IPR2022-00634, Paper No. 7 (PTAB Oct. 4, 2022) 6

Daifuku Co. v. Murata Machinery, Ltd.,
IPR2015-00084, Paper No. 10 (PTAB May 4, 2015) 7

Personal Web Tech. v. Apple.,
848 F.3d 987 (Fed. Cir. 2017) 6

PATENT OWNER'S EXHIBIT LIST

No.	Description
2001	Declaration of Robert Sherwood in support of Patent Owner's Response ("Sherwood Decl.")
2002	*Curriculum vitae* of Robert Sherwood
2003	June 29, 2023 deposition transcript of Christopher Schmandt ("Schmandt Tr.")
2004	Sterne, *World Wide Web Marketing* (2d ed. 1999) ("Sterne II")
2005	Dyson, *Mastering Microsoft Internet Information Server 4* (2d ed. 1998)

I. INTRODUCTION

All grounds of the Petition rely on a combination of the Rosenberg reference with discussions of the Firefly Passport system in two separate references known as Zeff and Sterne. The Petition's stated motivations for the combination are that the combination would supposedly enable Rosenberg "to offer its profile sharing services to a broad range of third-party websites," because Firefly is designed to interoperate with any number of websites. Pet. 40. Yet the Petition only explains how its combination might work as applied to exactly ***two*** websites, a far cry from the "broad range" allegedly motivating the Petition's combinations. That presents a problem for the Petition because Petitioner's expert readily acknowledged that "it would be ***rather foolish*** to build a system like Rosenberg just to synchronize two servers." Ex. 2003 ("Schmandt Tr.") at 13:9-12.[1]

The Petition's silence regarding how any non-"foolish" implementation would work creates a critical failure. As Petitioner's expert admitted, the type of person who would have made decisions about the desirability of an implementation would have been persons "who design the user experience" (Schmandt Tr. at 20:9-22), and whether using multiple frames on a single page to synchronize identifiers "would be a good user experience" is a question that "would depend ***entirely*** on how

[1] All emphases herein are added unless otherwise specified.

those frames were laid out" (Schmandt Tr. at 13:13-14:4). But the Petition contains no discussion whatsoever, and has no evidence at all, about "layout of frames" for scenarios with numerous participating servers. *See* Schmandt Tr. at 26:4-18 ("Q. In your declaration, do you explain what the layout of frames would look like for . . . more than two servers? A. No, I haven't designed—I haven't designed a user interface.").

Accordingly, the Petition fails to explain how any non-"foolish" implementation of its proposed combination would operate, and thus provides no description of any combination of references that would arrive at the challenged claims and that a POSITA would have been motivated to implement.

The Petition fails for the additional, independent reason that the Petition fails to present any coherent theory as to how reception of a partial profile is "achieved as a result of automatic electronic URL redirection" in Rosenberg. The Petition argues that this limitation is disclosed for two reasons: (1) the alleged redirection enables the user to request content from Rosenberg's Server B, and (2) the alleged redirection provides an identifier that is "needed" by Rosenberg's database server to receive information about the user's activities. But both of these assertions are incorrect, as shown by the admissions of Petitioner's expert as well as Rosenberg itself.

II. OVERVIEW OF THE '582 PATENT

The '582 Patent discloses inventions that relate generally to a "method directed to brokerage of attributes of information." Ex. 1001 at 1:29-31. According to the '582 Patent, "[a]dvances in database technology have given rise to commerce in records, files and databases, per se. For example, paying for a database credit check for an individual or buying a mailing list have become common practice." *Id.* at 1:35-38. The '582 Patent further discloses that "[u]nfortunately, the current state of information commerce is focused on the sales of whole databases, whole records, or evaluations based on single or clusters of records." *Id.* at 1:57-59. The '582 Patent indicates this is a problem because, in "applications where specific attributes of information strongly affect the value of evaluations, there is a need in the art for commerce in such attributes. For example, in targeted advertising, every attribute, which substantially affects the probability of that advertisement's success, innately has a discrete economic value." *Id.* at 1:59-65.

The '582 Patent solves this problem by utilizing "a descriptive-profile mercantile method, for use at a juncture in a data communications topology having associated therewith a maintained databank of partial profiles." *Id.* at 3:30-33. The '582 Patent teaches that those maintained profiles may be updated or expanded by combining previously maintained profile information with additional profile information about a given visitor that has been obtained as a result of redirection

from a portion of a website page of a third party. For example, "By redirecting a portion of the visitor's page to the server, the visitor's browser reports to the server a cookie the server put on the visitor's computer in the past, if any." *Id.* at 4:5-8. That technical process allows consolidation of profile information about a given visitor, thereby adding value to a maintained profile, which can have use, as indicated, in targeted advertising.

Claim 11 is the sole independent claim challenged by the Petition, and all other challenged claims depend from Claim 11. Claim 11 recites:

> 11. A tangible, non-transitory data storage medium comprising indicia of instructions for a processor to perform a method of collecting profiles of Internet-using entities, the method comprising:
>
> (a) electronically receiving at a programmed computer system coupled to a global computer network, from at least one server controlled by one of a plurality of unaffiliated third parties, a partial profile of an entity that uses a user computer coupled to the global computer network and accessing a website, which partial profile is available to one of the third parties and contains at least one profile attribute related to the entity, and automatically with the computer system storing the received partial profile;
>
> (b) wherein receiving the partial profile is achieved as a result of automatic electronic URL redirection from a portion of a page of the website accessed by the user computer;

(c) automatically with the computer system electronically adding the received partial profile to a maintained profile believed to be related to the same entity;

(d) automatically with the computer system generating and storing an electronic record of which of the plurality of unaffiliated third parties contributed to the maintained profile particular profile attributes;

(e) wherein the maintained profile, including the added partial profile, comprises data used in targeting third-party advertisements to the user computer over the global computer network.

Ex. 1001 at claim 11.

III. LEVEL OF ORDINARY SKILL IN THE ART

Relying on testimony from its expert, the Petition proposes that a person of ordinary skill in the art ("POSITA") in the field of the '582 Patent "would have possessed a bachelor's degree in electrical engineering or computer science, and two years of work experience in the field of network-based computer systems, such as systems for sending and receiving information over local networks and wide area networks (such as the Internet or World Wide Web). A person could also have qualified with more formal education and less technical experience, or vice versa." Pet. at 12 (citing Ex. 1002 ("Schmandt Decl."), ¶¶ 10-14). For purposes of this Response, Patent Owner does not challenge this general definition. Also, Petitioner's expert testified to added details about the type of POSITA who would have made

decisions pertinent to the obviousness combinations; Patent Owner relies on those details *infra*. *See* Sherwood Decl. ¶¶ 33-35.

IV. CLAIM CONSTRUCTION

Petitioner states that it "does not believe an express claim construction is necessary at this time for this IPR." *See id.* at 13. Patent Owner agrees that claim construction is not necessary to resolve any issue for institution and that the plain and ordinary meaning of the claim language should be applied.

V. THE PETITION FAILS TO ALLEGE HOW ANY NON-"FOOLISH" COMBINATION OF ROSENBERG WITH ZEFF AND STERNE WOULD OPERATE.

To support an allegation of obviousness, a mere showing that all claim elements are present in separate prior art references is insufficient. *Personal Web Tech. v. Apple.*, 848 F.3d 987, 991 (Fed. Cir. 2017) (holding such evidence "would not be enough"). The Petition must thus go further. Specifically, the Petition must explain (1) "***how*** specific references could be combined"; (2) "which combination(s) of elements in specific references would yield a predictable result," and (3) "how any specific combination would operate or read on" the claims. *ActiveVideo Networks, Inc. v. Verizon Commc'ns, Inc.*, 694 F.3d 1312 (Fed. Cir. 2012); *see ADT LLC v. Vivint, Inc.*, IPR2022-00634, Paper No. 7 (PTAB Oct. 4, 2022) (denying institution where petitioner failed to explain "***which combination*** . . . would yield

the 'expected benefits'"); *Daifuku Co. v. Murata Machinery, Ltd.*, IPR2015-00084, Paper No. 10, at 16-17 (PTAB May 4, 2015) (denying institution for failure to show obviousness, where petitioner provided no "technical analysis of ***how*** the asserted combination would have worked [or] why it would have been an obvious combination to one of skill in the art"). Stated differently, the Petition cannot merely allege the obviousness of ***some*** combination of references; it must instead demonstrate "that a skilled artisan would have been motivated to combine the teachings of the prior art references ***to achieve the claimed invention***, and that the skilled artisan would have had a reasonable expectation of success in doing so." *ActiveVideo*, 694 F.3d at 1327-28.

The Petition's invalidity theory for all grounds involves a combination of the Rosenberg reference (Ex. 1003) with Zeff (Ex. 1004) and Sterne (Ex. 1005); the latter two "describe details about the Firefly Passport system." Pet. at 14 ("All of the proposed grounds rely primarily on Rosenberg," and those grounds "combine Rosenberg with [Zeff and Sterne], which describe details about the Firefly Passport system . . . ."). In other words, the Petition relies on a combination of Rosenberg with descriptions of the Firefly Passport system.[2]

[2] Patent Owner refers to "Firefly" and the "Firefly Passport system" interchangeably. Patent Owner also refers to those terms to refer to the "descriptions" in the two cited

However, the Petition does not explain ***how*** a POSITA would have implemented any sensible (and thus motivated) combination of Rosenberg and the Firefly Passport system. *See* Sherwood Decl. ¶¶ 42-70. As such, the Petition cannot show motivation to combine or a reasonable expectation of success in combining Rosenberg with the Firefly system in a manner that would practice the challenged claims. Specifically, Firefly is designed to interoperate with any number of websites (and a POSITA would understand Rosenberg to teach that its system would desirably be implemented to allow an arbitrary number of websites), but Petitioner relies on a way of implementing Rosenberg that allows for only ***two*** different websites, even though Petitioner's expert admitted that such an implementation would be "foolish." Schmandt Tr. at 13:9-12. Accordingly, the Petition's sole explanation of how its combination would work would not have motivated a POSITA to implement the stated combination.

The discussion that follows identifies numerous reasons why a POSITA would have *avoided* implementing the system described in the Petition. Patent Owner begins, however, with an overview of the Petition's proposed combination.

---

references, in some instances omitting the word "descriptions" for simplicity of exposition.

A. Overview of the Petition's proposed combination

The Rosenberg reference is a patent that relates generally to a "method of tracking a web browser across distinct domains of a network of computers." *See* Ex. 1003 ("Rosenberg") at Abstract. Rosenberg teaches that its "invention operates by having a group of related server computers, say server computers 24A-24N, cooperatively observe a common protocol." Rosenberg at 4:52-55. By "observing the common protocol, the group of server computers can track web browsers across distinct domains." *Id.* at 4:57-59; Sherwood Decl. ¶ 44.

Rosenberg teaches, as both Petitioner's and Patent Owner's experts recognize, that this "common protocol" would be used to synchronize unique identifiers between ***all*** of the participating servers in the system. *See, e.g.*, Rosenberg at 3:28-30 ("In particular, the technique of the invention allows ***all*** cooperating servers to share information via a database."); *id.* at 5:28-33 ("[T]he returned page includes an instruction to convey the unique identification information ***to each server*** in the network of servers that is operating in accordance with the invention. For the purpose of simplicity, FIG. 2 merely illustrates a single server 24B as receiving the unique identification information."); Schmandt Tr. at 23:9-25:12 ("Server A would be doing the same thing with respect to all of [the participating servers]."); Sherwood Decl. ¶ 45.

Rosenberg teaches that its invention generally relates to "a larger number of server computers" such as an arbitrary number of servers "24A through 24N."[3] Nevertheless, apparently for simplicity of explanation, Rosenberg limits its illustrations and examples to how its invention might operate with only "two server computers 24A and 24B." *See, e.g.*, Rosenberg at Figs. 1-7 & 4:16-19; *id.* at 5:31-33 ("For the purpose of simplicity, FIG. 2 merely illustrates a single server 24B as receiving the unique identification information."); Sherwood Decl. ¶ 45-46. As Petitioner's expert acknowledged, a POSITA would not understand Rosenberg to disclose that it would be desirable to implement its system to accommodate *only* two server computers 24A and 24B. Schmandt Tr. at 13:9-12 ("And indeed, ***it would be rather foolish to build a system like Rosenberg just to synchronize two servers.***"); Sherwood Decl. ¶¶47-48.

---

[3] A POSITA would understand Rosenberg's usage of "N" as the last server in the grouping implies that any arbitrary number of servers can be used, since "N" is often used as a substitute in mathematics for an arbitrary number (e.g., "the Nth item in a list"). Schmandt Tr. at 24:8-25:5 (applying this teaching of Rosenberg to mean that "the group of servers could include an arbitrary number"). There is no indication that Rosenberg used "N" to refer specifically to 14 servers because "N" is the 14th letter of the English alphabet. Sherwood Decl. ¶ 46.

Rosenberg teaches that, after a user visits a first server in the network ("Server A"), Server A will assign a unique identifier "i" to the user's computer (Rosenberg at 5:1-15) and then transmit that unique identifier "to each server in the network that is operating in accordance with the invention." Rosenberg at 5:16-31. Rosenberg teaches several alternative ways to convey that unique identifier to the other servers in the network, although (again for simplicity) Rosenberg describes conveying the unique identifier to a ***single*** other server. *See generally* Rosenberg at 8:33-9:24 (discussing the use of "a hypertext link," a "cross-site reference with a frame tag," a "cross-site reference with an HTML form submission tag," a "cross-site reference with an image tag," and a "cross-site reference statement with an HTTP redirect command" as alternative means of sharing the unique identifier); Sherwood Decl. ¶ 49.

The Petition relies exclusively on a theory where a POSITA would supposedly have used Rosenberg's "frame tag" approach (one of five alternative approaches discussed in Rosenberg) to synchronize unique identifiers among Rosenberg's servers. *See generally* Pet. 28-33. Under that approach, when a user visits a webpage in the domain of Server A, that user will simultaneously see a page for a webpage in the domain of Server B in a visible frame. The Petition's mockup diagram reproduced below visually illustrates that proposal, as applied to exactly two participating servers:

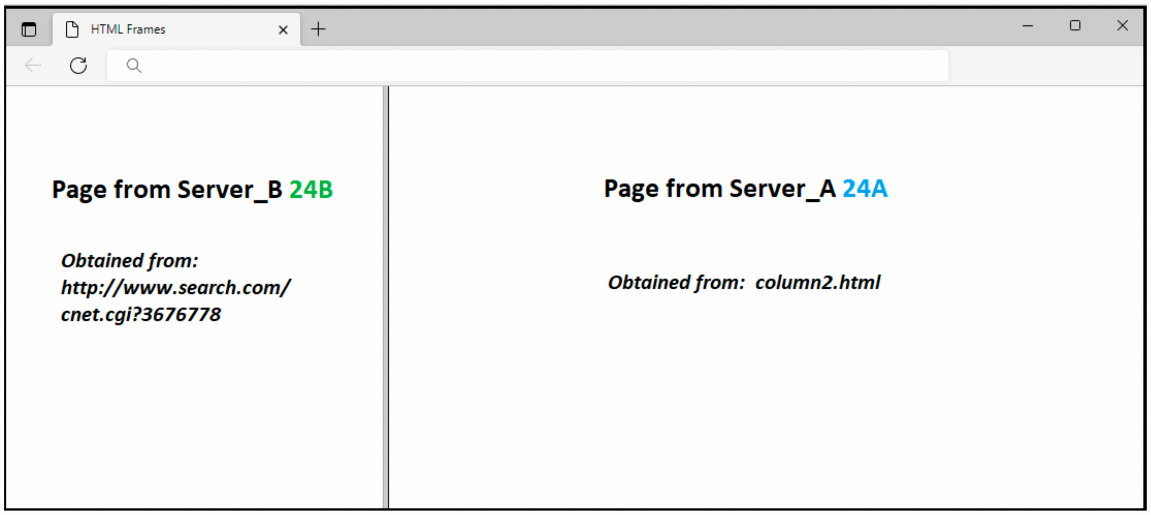

See Pet. 32; *see also id.* at 32-33 (alleging that, in its proposed implementation of Rosenberg, "each webpage would have been fully and independently functional, ***simultaneously displayed to the user in the same browser***, and each webpage would have behaved in the same way as if it were displayed in a separate window in the web browser").

As the Petition recognizes, Rosenberg alone does not disclose or render obvious the feature that the parties controlling servers in Rosenberg's network would include a "plurality of unaffiliated third parties," so the Petition needs to add Firefly (as discussed by Zeff and Sterne). *See* Pet. 37-39. Indeed, Rosenberg itself discloses that the servers participating in its network are "***related*** server computers." Rosenberg at 4:52-55; *accord id.* at 8:1 ("a set of ***related*** servers"). Although Rosenberg does not explicitly identify the precise ***type*** of "relatedness" among the servers, nothing in Rosenberg suggests that they would have been controlled by

distinct entities, much less would have had "no common ownership, control, or affiliation with each other, or with the party that owns and controls database server 25" as the Petition's theory requires. Pet. 39; Sherwood Decl. ¶¶ 50-52.

To argue that the combination of Rosenberg and Firefly would satisfy the "unaffiliated third parties" claim limitation, the Petition relies on Zeff's teaching that "***[a]ny site*** can be enhanced to be a part of the Firefly network," and Sterne's teaching that Firefly "can be used by ***any site***." Pet. 38-39 (quoting Zeff at 0058 and Sterne at 00172). The Petition looks to Zeff and Sterne because "Firefly was already a commercially-successful and widely available embodiment of the same type of profile sharing system described in Rosenberg," and Firefly "was supported by a number of well-known sites by 1996." Pet. 39-40. According to the Petition, combining Firefly with Rosenberg would beneficially have allowed the owner of Rosenberg's database server 25 "to offer its profile sharing services to a ***broad range of third-party websites*** and increas[e] its prospects for achieving financial success." Pet. 40.

In other words, the Petition's stated motivation for the relied-on combination depends on a motivation to ***scale*** the teachings of Rosenberg to a "broad range" of unrelated "third-party websites," thus "increasing [Rosenberg's] prospects for achieving financial success." *See id.*; Sherwood Decl. ¶¶ 53-54.

B. The Petition only explains how its proposed combination would apply to exactly two participating servers in Rosenberg, which Petitioner's expert admitted a POSITA would not have been motivated to implement.

Petitioner's expert confirms that a POSITA would not have been motivated to implement a combination of Rosenberg with Firefly simply to apply that combination to just two participating servers. *See* Schmandt Tr. at 13:9-12 ("And indeed, ***it would be rather foolish to build a system like Rosenberg just to synchronize two servers.***").

Yet, despite the motivation discussed in the Petition to reach a "broad range" of websites, the Petition only explains how its combination would work as applied to *exactly two* participating servers. Specifically, the Petition contains the following mock-up allegedly illustrating how Server A would share its unique identifier with Server B:

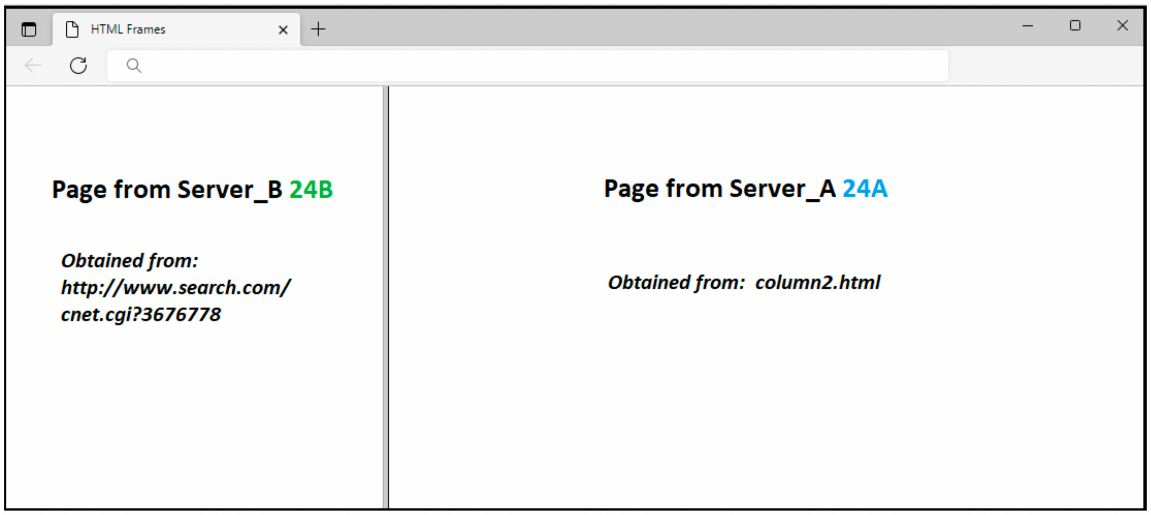

Pet. 32; *see generally* Pet. 28-33 (discussing how the frame would transmit a unique identifier to only a single server other than Server A); Sherwood Decl. ¶¶55-57.

Petitioner's expert could not identify any portion of his declaration where he "specif[ied] how Server A could synchronize unique identifiers between more than one [other] server." *See generally* Schmandt Tr. at 22:18-26:18. At one point, he testified that "[i]t makes no difference whether Server A is referencing one other server or 18 other servers," but immediately thereafter, he acknowledged that it would be "silly" if "the frame layout would be exactly the same for Server A's web page if there were a hundred different servers within Rosenberg's network or [two] different servers within Rosenberg's network."

6 Q. Okay. So where in your declaration do you
7 state what that common protocol would be for a group of
8 servers more than just 24-A and 24-D?
9 A. It's the same protocol. It makes no
10 difference whether Server A is referencing one other
11 server or 18 other servers. They all have the same
12 protocol. If you had one server, you had one stat.
13 Q. Okay. So in your opinion, the frame layout
14 would be exactly the same for Server A's web page if
15 there were a hundred different servers within
16 Rosenberg's network or 22 different servers within
17 Rosenberg's network?
18 A. No, of course not. It's silly. But it would
19 use the same technique. Frames. There's no limitation
20 in the frame HTML construct that says frames are limited
21 to two.

Schmandt Tr. at 25:6-21.[4] Despite the acknowledgement that "of course" the layout of frames would have to be different between two servers and an arbitrary number of servers, and it would be "silly" to apply the same layout, Petitioner's expert

[4] The transcript's reference to "22" instead of "two" (or "2") is a transcription error, as evidenced by Mr. Schmandt's answer that "the frame HTML construct" is not "limited to two" frames.

admitted that he had provided no explanation at all as to how a POSITA might scale the "same technique," i.e., the use of frames for ID synchronization, for "more than two servers," much less for an arbitrary number of servers:

22 Q. And yet in your declaration, your mockup only
1 discloses how two servers are synchronized in
2 identifying the frames, right?
3 **A. Yes, that's correct.**
4 Q. In your declaration, do you explain what the
5 layout of frames would look like for synchronization of
6 unique identifiers between more than two servers?
7 **A. No, I haven't designed -- I haven't designed a**
8 **user interface. There's no usee are interface component**
9 **claim in the '582 patent. I'm sorry. Yeah, '582. I've**
10 **discussed a mechanism, and I've cited to a mechanism**
11 **which would allow some number. There's only so many**
12 **pixels on the screen, but it would certainly allow for**
13 **more than two frames.**

Schmandt Tr. 25:22-26:13.

Thus, the Petition has only explained ***how*** its proposed combination would work for exactly two servers. And it is undisputed that a POSITA would ***not*** have been motivated to implement a combination of such limited scope and utility, given

the admissions of Petitioner's expert and the teachings of Zeff, Sterne, and Rosenberg to that effect. Schmandt Tr. at 13:9-12 ("And indeed, ***it would be rather foolish to build a system like Rosenberg just to synchronize two servers.***"); Zeff at 0058 ("***[a]ny site*** can be enhanced to be a part of the Firefly network"); Sterne at 00172 (Firefly "can be used by ***any site***"); Sherwood Decl. at ¶46 (explaining that a POSITA would understand Rosenberg's disclosure of using servers "24A through 24N" teaches using an arbitrary number of servers); Schmandt Tr. at 24:8-25:5 (same). Rather than implementing a system that could apply to only two servers, a POSITA would seek to create a system that could have been scaled to an arbitrary number of servers, because Rosenberg, Zeff, and Sterne all teach the desirability of such scaling, and indeed the Petition's stated motivation for the combination is "to offer [Rosenberg's] profile sharing services to a ***broad range of third-party websites*** and increas[e Rosenberg's] prospects for achieving financial success." Pet. 40; Sherwood Decl. ¶¶ 58-59. Yet, critically, the Petition does not explain how Firefly could be combined with Rosenberg to achieve that admittedly desirable goal.

Petitioner's expert made a pair of admissions that together demonstrate the Petition's deficiency. First, he admitted that persons "who design the user experience" would have been the sort of POSITA to decide how to implement an ID-synchronization technique that would impact a website's visuals. Schmandt Tr. at 20:9-22. Second, Petitioner's expert admitted that, in the context of using frames

for ID synchronization, "a good user experience" "would depend ***entirely*** on how those frames were laid out." Schmandt Tr. at 13:13-14:4. Third, he admitted that having only two frames to synchronize identifiers between only two sites is "foolish." Schmandt Tr. at 13:9-12. Yet, the Petition does not describe how a POSITA would have designed a layout of frames that would have allowed Rosenberg's system to synchronize identifiers among a "broad range" of websites as would be required to obtain the benefits the Petition alleges would have motivated the proposed combination. *See* Pet. 40 (alleging a motivation to expand Rosenberg's system to a "broad range of third-party websites"); Schmandt Tr. 25:22-26:13 (admission that Petitioner's expert did not "explain what the layout of frames would look like for synchronization of unique identifiers between more than two servers"); Sherwood Decl. ¶¶ 55-59.

Those admissions reveal a hole in the Petition's reasoning: The combination is not scalable to a "broad range" of websites (which the Petition presents as the supposed rationale for the combination in the first place) unless the "frame" approach on which the Petition focuses could apply to a scenario with an arbitrary number of servers, yet an arbitrary number of servers would require a "good user experience," which in turn depends on frame layout, and the Petition is ***silent*** on how to accomplish such a layout. Accordingly, the Petition's silence regarding how to layout frames for any implementation—other than the "foolish" one where only two

servers are present—is a critical failing to present a *prima facie* case of obviousness, and is fatal to all the Petition's grounds. *See ActiveVideo*, 694 F.3d at 1327-28 (finding expert testimony "factually unsupported" where it provided no explanation of "how specific references could be combined" in an obvious manner to "operate or read on the asserted claims").

C. The Petition's combination of Rosenberg with Firefly would have not been obvious for additional reasons.

As discussed in the previous section, Petitioner's expert acknowledged that a POSITA would not have been motivated to implement the Petition's proposal to use two frames to synchronize identifiers between only two servers, because such an implementation "would be rather foolish." Schmandt Tr. at 13:9-12 ("And indeed, ***it would be rather foolish to build a system like Rosenberg just to synchronize two servers.***"). A POSITA would have avoided implementing such a system for numerous additional reasons. Sherwood Decl. ¶¶ 60-70.

First, the Petition's "visible frame" approach significantly increases visual clutter, compared to simply displaying only Server A's webpage in the user's browser, because ***two*** webpages will be shown in the space that would have previously been allocated to only a single webpage. The Petition's proposal is thus a dramatic departure from what a POSITA would have known to be best practices in web design, which include simplicity in presentation. Sherwood Decl. ¶ 61-62.

For example, in *World Wide Web Marketing*, written by the author of the "Sterne" reference relied on by Petitioner, Sterne writes: "Keeping things simple is absolutely essential on the Web. . . . You have a very limited time to grab and hold somebody's attention once he or she comes to your site. Even more important is giving the user the ability to navigate properly." Ex. 2004 (Sterne, *World Wide Web Marketing* (2d ed. 1998)) ("Sterne II") at 0135. POSITAs would also have known to "make [their] site as intuitive as possible." Sterne II at 0093; Sherwood Decl. ¶ 63. Displaying an unexpected website in a visible frame, in response to the user entering a URL for a ***different*** website, would have violated this principle because users do not expect websites to behave in such a fashion. Sherwood Decl. ¶ 63.

A POSITA would have also understood that Server A would be loath to give up screen space to a site that the user had not specifically requested, particularly because this would create a sub-optimal user viewing experience. *See* Sherwood Decl. ¶ 64 (citing Sterne II at 0025, which states that creating a web site requires "care in copyrighting and graphic design, with particular attention to the prospect's viewing experience"). A user visiting a first page seeks see ***that*** page and does not typically want or expect to have a significant portion of the screen devoted to a ***different*** page. Sherwood Decl. ¶ 64.

Furthermore, a POSITA would have recognized that embedding a frame to another site would pose significant stability concerns as of the priority date of the

’582 Patent. For example, a POSITA would have known that if a site “choose[s] to pop open a new screen without the visitor’s consent, [that site] might use up system resources that user doesn’t have available,” which could cause the “browser [to] disappear in the blink of an eye” or even “freeze the whole system and force [the user] to restart.” Sterne II at 0128-29 (“That’s not a nice way to treat people.”); Sherwood Decl. ¶ 65 (explaining that the concerns about opening a new screen without the visitor’s consent would have applied equally to opening a frame to an unrelated website without the visitor’s consent).

And even if loading two pages simultaneously might not entirely crash the user’s computer or browser, such an approach would certainly increase loading times because the user’s browser would be downloading content for Server B’s page at the same time as the browser is attempting to load Server A’s page. Sherwood Decl. ¶ 66. A POSITA would have recognized this drawback as significant, particularly given bandwidth limitations in the relevant timeframe. *See* Ex. 2005 (“Dyson”) at 0171 (“The best-looking Web site in the world is completely useless if it takes too long to load and people bail out before loading completes.”); *id.* at 0180 (“If your page does not appear on a visitor’s browser in a fairly short time, you’ve lost him; he is gone.”); Sherwood Decl. ¶ 66 (explaining that many users at the time had 56K or slower modems, which discouraged unnecessary use of bandwidth).

A POSITA would further understand that the Petition's proposal fares even worse when the servers involved are unaffiliated as the Petition proposes.[5] Sherwood Decl. ¶ 67. For instance, unrelated sites would have had no inherent incentive to cross-promote each other, and the Petition has provided no motivation for such cross-promotion.

Indeed, unrelated sites would have actively ***avoided*** cross-promoting each other, because POSITAs would have taken active measures to avoid losing online visitors to another site. *See* Sterne II at 0126 (explaining: "Don't Lose Them to Another Site," and "ensure that you haven't spent a lot of time encouraging your users to see P.T. Barnum's Grand Egress"); Sherwood Decl. ¶ 68 & n.5. Additionally, cross-promotion of unrelated sites would exacerbate the concern about over-usage of system resources, because each participating server would have no control over the other's resource usage. *See* Sherwood Decl. ¶ 68 (explaining that if Server A includes a frame to Server B, yet there is not a strong common financial

[5] Rosenberg itself teaches that its servers are "related," which implies a close relationship between the companies. That itself is inconsistent with the Petition's motivation to extend Rosenberg's system to a broad range of third-party participants. *See* Sherwood Decl. ¶¶ 52, 67.

incentive such as common ownership, Server A has no assurances that Server B's page won't include resource-intensive page elements).

Despite these obvious drawbacks, cross-promotion of unrelated sites (including of direct competitors) is exactly what Petitioner's combination would cause. For instance, when counsel for Patent Owner asked for "any example [of websites] that makes sense for this combination," Petitioner's expert gave the example of direct competitors (CNN and Fox) cross-promoting each other. *See* Schmandt Tr. at 15:13-17 ("**Q.** . . . I'm just trying to come up with any example that makes sense for this combination. So can you give me a website that could be Server A? **A.** Sure. Let's say CNN.com."); *id.* at 17:6-8 ("**Q.** But what is Server B? A. You want an example? Let's say it's Fox dot com."). And when pressed on why cross-promotion by direct competitors would make any sense, Petitioner's expert simply ***assumed*** some unspecified revenue benefit to Server A and reasoned that the Rosenberg system could use this revenue benefit as leverage to ***require*** Server A to cross-promote another site, even one that is a direct competitor:

9 Q. Okay. So you think that it would make sense
10 for CNN dot com to also show Fox dot com in the same
11 browser?
12 **A. I'm not going to stand on my political soapbox**
13 **there.**
14 **So which other servers CNN dot com showed**
15 **would depend on which other servers were part of this**
16 **overall system that Rosenberg discloses or the '582**
17 **patent discloses. In both instances Rosenberg and the**
18 **'582, there was some prearranged relationship between**
19 **servers that have provided contents to users, and that**
20 **prearranged relationship is such that each of those**
21 **servers is going to deliver partial profile information**
22 **to some other entity which is going to make some**

1 **decisions based on that.**
2 **Okay. So at the first level, CNN dot com by**
3 **becoming a member of this network, which presumably it**
4 **does because it is somehow advantageous, in terms of**
5 **advertising revenue, which is what counts anyway at the**
6 **end of the day. So CNN in choosing to become part of**
7 **this network is basically being told by the network**
8 **you've got to connect to these other members of our**
9 **network. That's sort of the base level.**

Schmandt Tr. at 17:9-18:9. In other words, Petitioner's expert ***presumes*** that his proposed combination would be "somehow advantageous," and sufficiently so as to

justify Rosenberg's network ***forcing*** ("being told . . . you've got to") websites to cross-promote any other site, even a direct competitor, the obvious disadvantages be damned. *See* Sherwood Decl. ¶69.

As any POSITA in the advertising industry as of the priority date of the '582 Patent would have recognized, websites strictly avoided cross-promoting competitors. In fact, companies at the time even avoided allowing their advertisement to appear adjacent to a competitor's advertisement, and if that happened, it could even result in compensation (e.g., a refund) from the advertising system. Sherwood Decl. ¶ 70. There is simply no reason to presume, as Petitioner's expert does, that Rosenberg's network would have benefits that would outweigh the serious drawbacks of Petitioner's proposed combination, especially when neither the Petition nor the expert can specify the nature of such benefits, other than a vague allusion to it being "***somehow*** advantageous, in terms of advertising revenue," for unexplained reasons. In fact, a POSITA would have presumed precisely the opposite. *See* Sherwood Decl. ¶ 71.

VI. THE PETITION'S COMBINATION DOES NOT RECEIVE A PARTIAL PROFILE "AS A RESULT" OF URL REDIRECTION.

All challenged claims require "electronically receiving … a partial profile … wherein receiving the partial profile is achieved as a result of automatic electronic URL redirection." Ex. 1001 at claim 11. The Petition lays out no viable theory of

how its proposed combination "result[s]" in receiving what the Petition identifies as the "partial profile." *See* Sherwood Decl. ¶¶ 72-89.

In each of the Petition's grounds, the Petition relies exclusively on Rosenberg for an alleged disclosure of "electronically receiving … a partial profile … wherein receiving the partial profile is achieved as a result of automatic electronic URL redirection."[6] A description of certain relevant portions of Rosenberg's system is provided below, followed by a brief summary of the Petition's theory as to how Rosenberg supposedly satisfies the "receiving … a partial profile … as a result of automatic electronic URL redirection" limitation. With that background, this section then identifies the numerous reasons the Petition's theory cannot succeed.

A. Background of Rosenberg

Rosenberg generally describes a system in which a given number of server computers 24A-24N "cooperatively observe a common protocol" that allows those computers to "track web browsers across distinct domains." Rosenberg at 4:52-64. Rosenberg's "common protocol relies upon a common database of information" for server computers 24A-24N, and the common database is contained in "server

[6] The Petition relies on Zeff and Sterne's description of the Firefly system only for the requirements of "unaffiliated third parties" and "target[ed] third-party advertisements." *See* Pet. at 37-42, 51-53.

computer 25." *Id.* at 4:55-57. Rosenberg's Figure 1 illustrates the general structure of this system:

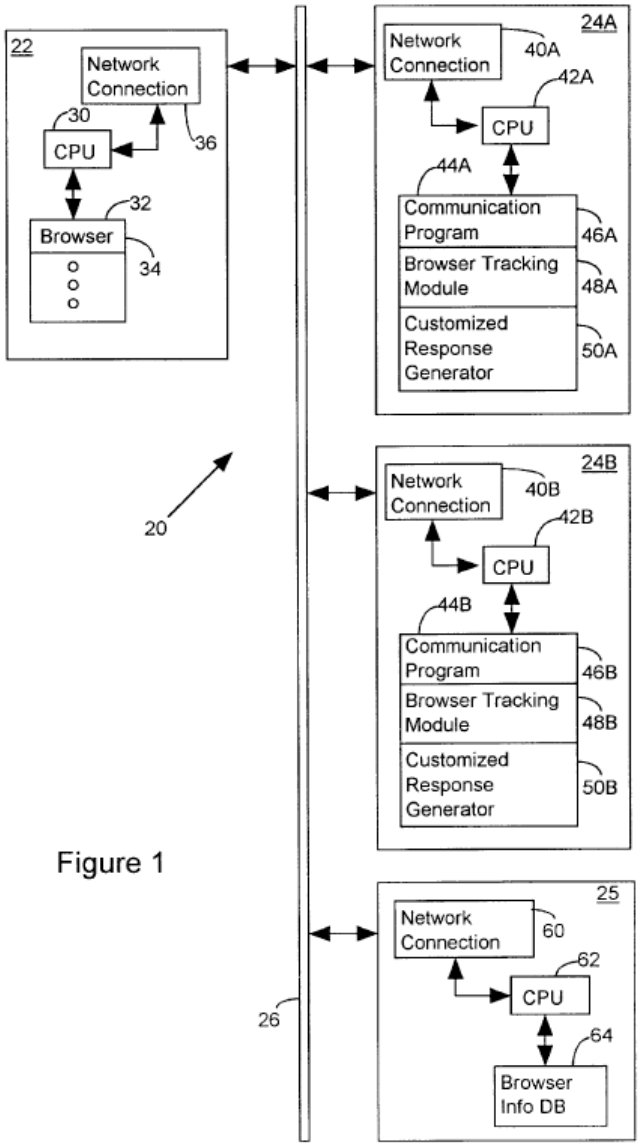

Figure 1

Id. at Fig. 1. Although Rosenberg's Figure 1 illustrates only two server computers 24A and 24B, Rosenberg teaches that a "typical embodiment" would include "server computers 24A through 24N." *Id.* at 4:16-20; Sherwood Decl. ¶ 74. Rosenberg's Figure 1 also shows "client computer 22," which is "a standard computer" that

includes "a web browser" that is "used to communicate with remote server computers 24." *Id.* at 4:7-15.

Rosenberg's "common protocol" takes effect when client computer 22 requests a web page hosted by one of the servers 24A-24N. Sherwood Decl. ¶ 75. This is illustrated in Rosenberg's Figure 2 at step 70, where "Client Computer 22" performs the step of "Request[ing] Page From Server_A":

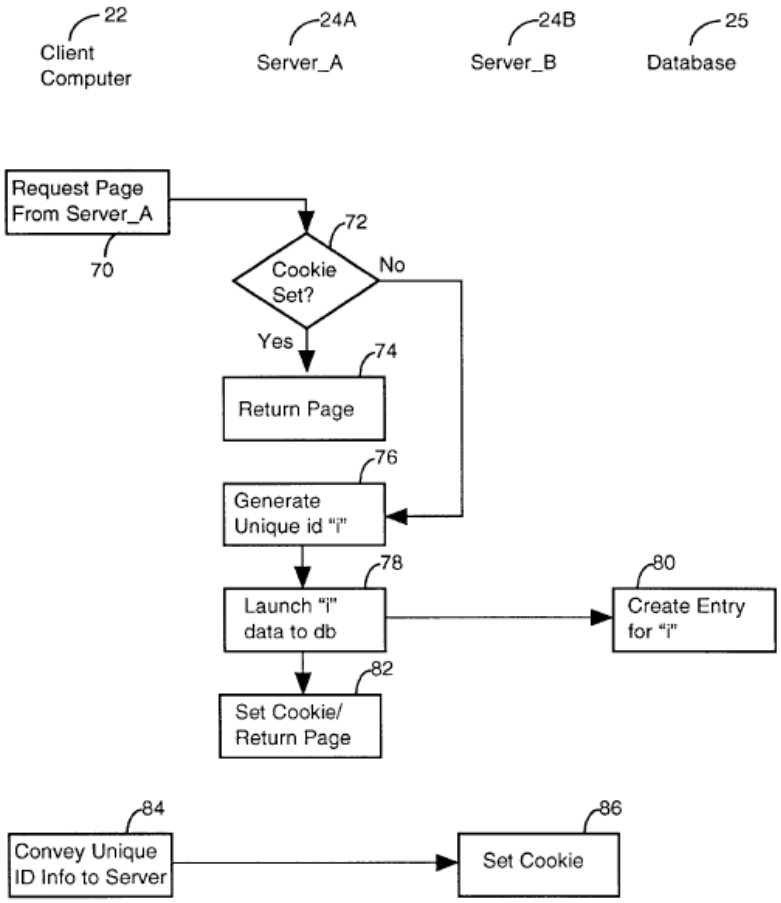

Rosenberg at Fig. 2. After the user requests a page from Server_A, Server_A evaluates in step 72 whether a cookie has already been placed on client computer 22. *Id.* at 5:5-6, Fig. 2. If a cookie has already been placed, Server_A returns the

requested webpage, and no further action is needed. *Id.* at 5:7-8. If no cookie exists, however, Server_A generates a unique identifier "i" and sends that identifier to database 25 so that the database can create a database entry for identifier "i." *Id.* at 5:8-12. The next step is to "set a cookie [on the client computer] corresponding to the unique identification value and return a page of the requested information" in step 82. *Id.* at 5:17-19. In step 82, however, "the returned page includes instructions to convey the unique identification information to additional server computers that are observing the same protocol," as illustrated in step 84. *Id.* at 5:21-26. Rosenberg teaches that, although Figure 2 displays only Server_B receiving the unique identification information "[f]or the purpose of simplicity," the unique identifier is actually sent "to each server in the network of servers that is operating in accordance with the invention." *Id.* at 5:21-33; Sherwood Decl. ¶ 75.

Rosenberg elsewhere describes the specific mechanism by which the unique identifier "i" is sent to the other servers (such as Server_B), namely by an embedded HTML object "that references another server computer, say server computer B 24B." *See* Rosenberg at 8:12-34 (explaining that there are "several ways in which an HTML reference to another site can be embedded in a page"); Sherwood Decl. ¶ 76. Although Rosenberg provides several examples of how the unique identifier "i" may be transmitted to Server_B, the Petition focuses primarily on just one embodiment: Server_A generates a page that creates multiple "frames, one of which

references a page on another site [e.g., a site provided by Server_B]." *Id.* at 8:56-65 (describing the use of frames for this purpose); Pet. at 28-34, 42-46 (relying on Rosenberg's teachings regarding frames). According to the Petition, this embodiment creates a scenario where, when a user navigates to the webpage provided by Server_A, the user's browser will display both the webpage of Server_A ***and*** the webpage of Server_B at the same time.

At pages 32-33, the Petition shows a "mock-up" of how Petitioner contends a request to a website provided by Server_A would appear in a user browser, such that both the page from Server_A and the page from Server_B would be visible simultaneously. The Petition emphasizes that the frame for Server_B would be opened without any user request to access the Server_B webpage. *See* Pet. at 43 ("As Rosenberg explains, '[a]n advantage of this approach is that <u>the request will be made automatically, without the need for human action</u>.") (quoting Ex. 1003 at 8:64-65) (emphasis in original).

The result of Server_A's creation of a frame on the user's computer is Server_B receives the identifier "i" and sets a cookie with "i" on the client computer. *See* Ex. 1003 at 5:21-42 (explaining that the page returned by Server_A "includes instructions to convey the unique identification information to additional server computers," and that "[d]ifferent techniques for achieving this operation are discussed below"); *id.* at 8:12-9:24 (discussing different techniques for transmitting

identifier "i" to Server_B); *id.* at 5:40-54, 7:66-811 (explaining that as a result of Server_B's reception of the unique identifier, "server 24B will not generate a unique identification value, but will rely upon the value established by server 24A" when placing a cookie on the client computer); Sherwood Decl. ¶¶ 77-78.

Now that both Server_A and Server_B have placed a cookie on the user's computer with the same identifier "i" (e.g., cookie ID "123"), both of those servers can update database 25 with information about "Content Requested" by a user accessing the webpages provided by Server_A and Server_B. Rosenberg teaches that the information used to generate the database entries is "passed from the access logs of the server computers [24A-24N] to the database 25, typically at the end of a day or at other times when network traffic is light." *Id.* at 5:55-62. The type of information stored in the database is illustrated in Rosenberg's Figure 3, reproduced below:

Cookie ID #	Last Visit to Server_A	Content Requested			Last Visit to Server_B	Content Requested		
		News	Product Info	Feature Story		News	Product Info	Feature Story
123	4-9-96;18:25	2	5	0	7-4-96;16:23	1	7	3

Id. at Fig. 3.

Notably, Rosenberg teaches that these database entries reflect what "the user of the web browser requested" (*id.* at 5:63-6:5) during the user's visits to each webpage. Rosenberg thus excludes from the "Content Requested" fields of the

database any actions that the user did not specifically request (such as, e.g., the actions related to Server_A's communication of the unique identifier "i" to Server_B, to the extent those actions occur automatically without user action). *See* Ex. 1002 ¶93 (explaining that the "tracking information about user activity from Server_B" "provides a portion of the attributes ***attributable to a user***, *i.e.*, the ***user's*** activity when accessing Server_B 24B") (emphases added); Sherwood Decl. ¶¶ 79-80.

The exclusion in Rosenberg makes good sense, because the purpose of Rosenberg's system is to gather information about ***user*** behavior. Sherwood Decl. ¶ 81. The fact that Server_A sent the user's browser to Server_B without the user's consent does not reflect any user behavior with respect to Server_B. *See, e.g.*, Rosenberg at 3:25-28 ("The method of the invention allows a web browser to be passively tracked so that the content preferences and interests associated with the ***individual using the web browser*** can be identified.") (emphasis added); *id.* at 3:33-37 ("This cumulative information defines content preferences and demographics associated with the individual using the web browser. This information can be used to provide responses tailored toward the individual using the web browser."); *id.* at 3:6-8 (specifying a goal of "editors and advertisers … tailor[ing] their content to ***users***") (emphasis added).

B. The Petition's theory

Under the Petition's theory, when a user visits a website of Server_A (which website the Petition maps to "a website" of claim 11 (*see* Pet. at 33-34)), Server_A causes the user's browser to display two separate frames, one for the website provided by Server_A and one for the website provided by Server_B. *Id.* at 32-33. The frame displaying the website provided by Server_B also causes the user's "web browser to send the user's unique identification value" (e.g., "i" or cookie ID "123") "to Server_B" so that Server_B "can then use this unique user identification value to set a cookie for Server_B 24B using the same value." *Id.* at 45. According to the Petition, Server_A's provision of a frame that displays the website provided by Server_B supposedly constitutes the "URL redirection" of the challenged claims. *See id.* at 42-43.

The Petition further maps the "partial profile" of the challenged claims to "[t]racking information about content requested by a user who is accessing Server_B." *Id.* at 22. According to the Petition, a "partial profile" is generated ***after*** the alleged redirection using frames from the website provided by Server_A. Specifically, the Petition alleges that the alleged redirection using frames "enabled the user to request news, product information and feature story pages from Server_B." *Id.* at 44. That allegation makes clear that, under the Petition's theory, the redirection must ***precede*** the collection by Server_B of tracked user requests for

news, product information, and feature story pages, which constitutes the alleged "partial profile." *See id.*

C. The Petition fails to explain how "receiving the partial profile" is "achieved as a result of automatic URL redirection."

As noted above, the Petition alleges that a user is redirected to Server_B from Server_A when Server_A creates a frame in the user's browser where the source attribute for the frame points to a webpage provided by Server_B. Pet. 42. The Petition thus contends that, if a user then requests "news, product information [or] feature story pages from Server_B" using the aforementioned frame, database server 25 receives the "partial profile" information that results from such user requests "as a result of automatic URL redirection." Pet. 44.

The Petition proposes two theories as to how the reception of profile information is allegedly "as a result of automatic URL redirection." First, the Petition contends that the alleged redirection results in the receipt of the partial profile information because, supposedly, the redirection "***enabled*** the user to request news, product information and feature story pages from Server_B 24B—thus generating the 'partial profile'" that may later be received. Pet. at 44-45; Paper No. 9 (Institution Decision) at 18. However, the Petition ignores the fact that, in the context of Rosenberg's system, the use of a frame does ***not*** "enable[] the user to request news, product information and feature story pages from Server_B 24B." *See*

Pet. 44. Specifically, Petitioner's expert admits that "the user in Rosenberg could have directly navigated to and accessed Server_B 24B via its web browser without accessing the frame-based webpage provided by Server_A 24A (for example by entering the URL for Server_B 24B into the web browser address bar)." Ex. 1002 ¶101. In this scenario, of course, the user would be able to "request news, product information and feature story pages from Server_B 24B" without any redirection from Server_A 24A.[7] *Cf.* Pet. at 44. Thus, the user can submit requests that result in profile information being transmitted to database server 25 ***without*** the alleged redirection. Thus, the Petition's first theory, under which Rosenberg's frame allegedly "enabled the user to request news, product information and feature story pages" from Server B is unsupported. Sherwood Decl. ¶¶ 84-85.

[7] In this scenario, Server_B would transmit the alleged partial profile information to Rosenberg's database server 25 using a unique identifier assigned by Server_B, as Rosenberg teaches in its description of how the system would operate if a user visited Server_B's website without Server_B having previously received a unique identifier from Server_A. *See* Ex. 1003 at 6:10-58, Figs. 4-5 (showing profile data being provided to database server 25 using a cookie ID "456" assigned by Server_B); Sherwood Decl. ¶ 85 n.7.

Second, the Petition contends that the partial profile is received "as a result of" the alleged redirection because the redirection "causes the web browser to send the user's unique identification value ([e.g., Cookie ID # 123]) to Server_B 24B," which "can then use this unique user identification value to set a cookie for Server_B 24B using the same value." *Id.* at 45. The Petition alleges that this value is "needed in order to receive the 'partial profile' from Server_B 24B and store it in association with that user." *Id.* at 45-46.

Again, the Petition again cannot support the core premise underlying its second argument: that a "user identification value" received from Server_A is "needed" for database server 25 to "receive the 'partial profile' from Server_B 24B and store it in association with that user." *Id.* In fact, Rosenberg explicitly contradicts the Petition on this point. Sherwood Decl. ¶¶ 87-88. Rosenberg teaches that, in the case where a user visits the website hosted by Server_B 24B after the user visits Server_A 24A, but the unique identification information from Server_A 24A did "not reach" server 24B (e.g., "if the instruction to pass the unique identification information is defeated by programming instructions associated with the client computer 22, or … by some network interruption"), server 24B will assign its own unique identifier "j" to the user, which differs from the unique identifier "i" previously assigned by server 24A. *See* Ex. 1003 at 6:10-28. Rosenberg teaches that this "processing results in a database entry for the 'j' identification value," such that

database server 25 can receive profile information from server 24B using the "j" identification value, even though server 24A previously assigned that user an identification value of "i." *Id.* at 6:23-32. Subsequently, database 25 will "merge the previously separate 'i' and 'j' entries," such that the database is able to associate profile information regarding the user's visit to the webpage hosted by server 24B with a common unique identifier, even though the alleged redirection from 24A did not provide the unique identifier "i" to server 24B. Thus, if server 24A previously assigned ID "123" to the user, and server 24B later assigned ID "456" to the user," database server 25 will associate profile information obtained from both servers 24A and 24B with both cookie IDs "123" and "456." *See id.* at 6:32-58, Figs. 4-5.

Accordingly, Rosenberg explicitly teaches that database server 25 is able to receive the alleged partial profile information from server 24B (as well as store the profile information in association with the user), even if Server_A is unable to transmit a unique identifier to Server_B via the alleged redirection. *See generally id.* at 6:10-58, Figs. 4-5; Sherwood Decl. ¶ 89. Simply put, Rosenberg does not need Server_A's unique identifier to be transferred to Server_B in order for a partial profile describing a user's content requests from Server_B to be received and stored in association with the user. Thus, the Petition's premise that "URL redirection … furnished Server_B 24B with the user identification value that database server needed in order to receive the 'partial profile' from Server_B 24B and store it in

association with that user" (*see* Pet. at 45-46) is false, and the Petition's theory based on that premise cannot succeed. Sherwood Decl. ¶¶ 86-89.

Patent Owner acknowledges the Board's statement that "Petitioner has sufficiently demonstrated that Rosenberg discloses limitation [11(b)]." Institution Decision at 23. That conclusion was primarily based on understanding Patent Owner's preliminary response as arguing that the claim limitation "*precludes intervening user action* between automatic URL redirection and receipt of the partial profile." *Id.* at 23. But setting aside the question of whether or not the claim language precludes some amount of intervening user action, the Petition's theories fail on their own terms; as discussed above, the Petition does not establish that Rosenberg's alleged ***redirection*** "enable[s]" the user to request information from Server B (*see* Pet. 44-45), nor does the Petition establish that the alleged redirection furnished an identifier that is "needed" for Rosenberg to receive profile information from Server B (*see* Pet. 45-46).

VII. CONCLUSION

The Petition does not establish invalidity of any challenged claim for two independent reasons. First, Petitioner's expert conceded that a POSITA would not be motivated to design a combination of Rosenberg with Zeff and Sterne that could synchronize unique identifiers between only two participating servers, yet that is the only combination the Petition describes how to implement. Additionally, the

Petition's theories as to how a "partial profile" is alleged "achieved as a result of" URL redirection fail, because the alleged URL redirection does not enable the user to request content from Server B, nor does the alleged redirection provide Server B with a unique identifier value that is needed for Rosenberg's database server to receive profile information. Accordingly, all challenged claims should be found not unpatentable.

Date: July 14, 2023

Respectfully submitted,

/James A. Milkey /

James A. Milkey, Reg. No. 79,503
Russ, August & Kabat
12424 Wilshire Blvd., 12th Floor
Los Angeles, CA 90025

Counsel for Patent Owner

CERTIFICATION REGARDING WORD COUNT

Pursuant to 37 C.F.R. §42.24(d), Patent Owner certifies that there are 7,895 words in the paper excluding the portions exempted under 37 C.F.R. §42.24(a)(1).

Date: July 14, 2023

/James A. Milkey /

James A. Milkey, Reg. No. 79,503
Russ, August & Kabat
12424 Wilshire Blvd., 12th Floor
Los Angeles, CA 90025

Counsel for Patent Owner

CERTIFICATE OF SERVICE (37 C.F.R. § 42.6(e)(1))

The undersigned hereby certifies that the above document was served on July 14, 2023, by filing this document through the Patent Trial and Appeal Case Tracking System as well as delivering a copy via electronic mail upon the following attorneys of record for the Petitioner:

Heidi L. Keefe (Reg. No. 40,673)
Philip E. Morton (Reg. No. 57,835)
Andrew C. Mace (Reg. No. 63,342)
Mark R. Weinstein (*pro hac vice*)
COOLEY LLP
1299 Pennsylvania Ave. NW, Suite 700
Washington, DC 20004
hkeefe@cooley.com
pmorton@cooley.com
amace@cooley.com
mweinstein@cooley.com

Date: July 14, 2023

/James A. Milkey

RUSS AUGUST & KABAT
12424 Wilshire Blvd., 12th Fl.
Los Angeles, CA 90025
(310) 826-7474

James A. Milkey
Reg. No. 79,503
Attorney for Patent Owner

UNITED STATES PATENT AND TRADEMARK OFFICE

BEFORE THE PATENT TRIAL AND APPEAL BOARD

META PLATFORMS, INC.,
Petitioner

v.

ALMONDNET, INC.,
Patent Owner

Case IPR2022-01436
U.S. Patent No. 8,244,582 B2

PETITIONER'S REPLY IN SUPPORT OF ITS PETITION FOR *INTER PARTES* REVIEW

Table of Contents

Page

I. INTRODUCTION 1

II. PATENT OWNER'S "TWO SERVER" ARGUMENT. 2

A. It Is Undisputed That Rosenberg Is Not Limited to Two Servers. 2

B. Petitioner's Obviousness Theory Would Not Have Limited Rosenberg to Only Two Cooperating Servers. 3

C. Petitioner's Reliance on the Rosenberg Frame Tag Embodiment Would Not Have Limited Rosenberg to Only Two Servers. 6

D. An Ordinarily Skilled Artisan Would Not Have Been Discouraged From Using the Rosenberg Frame Tag Embodiment. 9

III. PATENT OWNER'S "URL REDIRECTION" ARGUMENT. 15

IV. PATENT OWNER'S "UNAFFILIATED THIRD PARTIES" ARGUMENT 20

V. CONCLUSION 22

I. INTRODUCTION

Patent Owner's response advances two primary arguments (both directed solely at independent claim 11), but neither argument provides any basis to overcome the instituted grounds. ***First***, Patent Owner claims that the Petition only explains how to implement the proposed combination of Rosenberg, Zeff and Sterne using two cooperating servers **24**A and **24**B. This argument is based entirely on a mischaracterization of how Rosenberg was used in the Petition. Rosenberg is not limited to two cooperating servers, and as Patent Owner acknowledges, Rosenberg itself states that a "typical embodiment" would have included additional cooperating servers. (Rosenberg, 4:16-19.) Patent Owner's argument improperly attempts to twist the Petition's analysis, which focused on servers **24**A and **24**B because no other cooperating servers were required to disclose the claim limitations, into some kind of concession that the proposed combination could only have been implemented using those two servers. Nothing in the Petition proposed any such limitation.

Second, Patent Owner argues that Rosenberg does not disclose receipt of the claimed partial profile "**as a result of**" automatic URL redirection. Patent Owner does not directly address either of the two theories set forth in the Petition for this claim limitation. Patent Owner instead argues that, under certain use cases and in response to specific error conditions, a partial profile might be received even if the claimed URL redirection did not occur. But Patent Owner's arguments are irrelevant

and violate established Federal Circuit law that a prior art reference can fully disclose a claimed method even if the steps are only sometimes performed in the prior art. For the reasons set forth below and in the Petition, the Board should find the challenged claims unpatentable based on the instituted grounds.

II. PATENT OWNER'S "TWO SERVER" ARGUMENT.

A. It Is Undisputed That Rosenberg Is Not Limited to Two Servers.

Patent Owner repeatedly acknowledges that Rosenberg is not limited to just Server_A **24**A and Server_B **24**B. (Response, *e.g.*, 10, 18, 27-28; EX2001, ¶¶46, 58, 74.) Rosenberg itself explains that a "typical embodiment" would have involved more than two cooperating servers:

> FIG. 1 illustrates two server computers **24**A and **24**B, <u>although a typical embodiment of the invention would include a larger number of server</u> computers, say server computers <u>**24**A through **24**N</u>.

(Rosenberg, 4:16-19; *see also id.*, 4:52-55 ("The present invention relates by having a group of related server computers, <u>say server computers **24**A-**24**N</u>, cooperatively observe a common protocol, which is described below.") (underlining added to both).) Patent Owner further acknowledges that the "N" in "**24**N" in Rosenberg indicates that an "arbitrary" number of cooperating servers can be used (and that Rosenberg does not, for example, use "N" to refer to the 14th letter of the alphabet). (Response, at 10 n.3; EX2001, ¶46.) Petitioner agrees with Patent Owner's interpretation of "**24**N" in the context of Rosenberg. (EX1019, ¶6.)

Patent Owner also correctly acknowledges that although the detailed description in Rosenberg focuses on servers **24**A and **24**B, this was provided "for simplicity of explanation," not to suggest a limit to the number of cooperating servers the system of Rosenberg could handle. (Response, at 10 (quoting Rosenberg, 5:31-33 ("For the purpose of simplicity, FIG. 2 merely illustrates a single server **24**B as receiving the unique identification information.")); *see also* Rosenberg, 7:49-53 ("The unique identifier is then sent to <u>one or more</u> cooperating server computers operating under the same protocol. Each cooperating server that receives the identifier sets a cookie based on the unique identifier.") (underlining added).)

B. Petitioner's Obviousness Theory Would Not Have Limited Rosenberg to Only Two Cooperating Servers.

Patent Owner's argument is based on the false assumption that the Rosenberg system, under the proposed combination, could only have included the two exemplary cooperating servers specifically described in Rosenberg, *i.e*. servers **24**A and **24**B. There is no basis for this assumption. (EX1019, ¶¶6-12.) During his deposition, Patent Owner's expert was asked whether he thought "the Petitioner's theory requires that Rosenberg be implemented using only two servers," to which he responded: "I don't recall that particular theory." (EX1020 at 14:13-15:7.)

Patent Owner's argument instead relies on the fact that the Petition focused on cooperating servers **24**A and **24**B in describing how Rosenberg satisfied the limitations of the challenged claims. But like Rosenberg itself, this focus was "for

simplicity of explanation," and not intended to suggest any limit to the number of cooperating servers the proposed combination could handle. The Petition's focus on cooperating servers **24**A and **24**B was also a by-product of the fact that, to show invalidity of the challenged claims, additional servers were not required. This is because claim 11 only requires "**a programmed computer system**," which Petitioner mapped to database server **25** in Rosenberg, and "**at least one server**," which Petitioner mapped to Server_B **24**B. (Petition, at 21-24; EX1002, ¶¶86-88.) The Petition went on to explain how Rosenberg disclosed the limitations of the challenged claims through the operation of and interactions between database server **25** and two cooperating servers – Server_A **24**A and Server_B **24**B. (Petition, *e.g.*, at 21-36, 42-53.) Although the system of Rosenberg can include additional cooperating servers as fully explained above, those additional servers were not claimed and thus not needed to satisfy the limitations of claim 11.

Patent Owner cannot identify a single statement in the Petition suggesting any technical modification to the system of Rosenberg – let alone any modification that would have removed Rosenberg's expressly-disclosed ability to use more than two

cooperating servers.[1] To the contrary, in discussing the embodiment in which profile information is conveyed from Server_A **24**A to Server_B **24**B, the Petition explained that this "is merely an example," and that those techniques "would have been equally applicable for sharing profile information with… <u>any other cooperating server</u> in which a cookie has been stored with the unique identifier." (Petition, at 36 (citing Rosenberg, 7:51-55) (underlining added).) The Petition thus made clear that the proposed combination does not exclude additional cooperating servers beyond Server_A **24**A and Server_B **24**B, notwithstanding that the challenged claims do not require them. (EX1019, ¶11; EX1002, ¶¶104, 120.)

---

[1] Petitioner cited Rosenberg in combination with Zeff and Sterne, but not to propose any technical modifications to Rosenberg. Petitioner relied on Zeff and Sterne for business and nontechnical teachings relating to the "unaffiliated third parties" limitation of claim 11(a), and the fact that the customized responses in Rosenberg could have been used for "targeting third-party advertisements" in claim 11(e). (Petition, at 14, 37-42, 51-53; EX1002, ¶¶108-110, 115, 131-132.) Zeff and Sterne were thus cited to describe business and economic uses to which the system of Rosenberg could have been deployed, not to suggest any modification that would have diminished the capabilities of Rosenberg such as its ability to be used with an arbitrary number of cooperating servers. (EX1019, ¶14.)

C. Petitioner's Reliance on the Rosenberg Frame Tag Embodiment Would Not Have Limited Rosenberg to Only Two Servers.

Patent Owner next points to the fact that the Petition relies on the "frame tag" embodiment in Rosenberg, which creates a web page with content from just two cooperating servers (*i.e.* Server_A **24**A and Server_B **24**B). According to Patent Owner, Petitioner's reliance on the frame tag embodiment means that the proposed combination could only be used with exactly two cooperating servers. (Response, at 14-19; EX1002, ¶¶50, 55-56.) But Patent Owner's argument improperly attempts to transform Petitioner's explanation of how the frame tag embodiment discloses the claim limitations, into an admission by Petitioner that the <u>entire</u> system of Rosenberg, under the proposed combination, can <u>only</u> be used with two cooperating servers. This argument is improper and should be rejected.

Nothing in Rosenberg or the proposed combination would have limited the frame tag embodiment to just Server_A **24**A and Server_B **24**B. Any number of server pairs in Rosenberg's network could have employed the exact same frame tag technique to allow a first cooperating server to convey the unique user identification to a second cooperating server, and display information from both servers in a dual-frame web page. (EX1019, ¶18.) For example, the frame tag embodiment in Rosenberg could also have been used with a "Server_C" and "Server_D," a "Server_E" and "Server_F," and so forth, across an arbitrary number of cooperating servers across Rosenberg's network of servers **24**A-**24**N. Accordingly, although the

exemplary frame tag in Rosenberg discloses a technique to display web page content from two cooperating servers, that same approach could have been used by and distributed across many different server pairs throughout the network. (*Id.*)

There is also no basis for Patent Owner's apparent assumption that an ordinarily skilled artisan implementing Rosenberg would have included only the absolute minimum set of features needed to invalidate the challenged claims by only allowing for two cooperating servers. An ordinarily skilled artisan would instead have considered Rosenberg as a whole, without regard to the more limited scope of the challenged claims. *See, e.g.*, *In re Fritch*, 972 F.2d 1260, 1264 (Fed. Cir. 1992) ("It is well settled that a prior art reference is relevant for all that it teaches to those of ordinary skill in the art."); *Vandenberg v. Dairy Equip. Co.*, 740 F.2d 1560 (Fed. Cir. 1984) ("In making its determination [of obviousness] a court must view the prior art without reading into that art the patent's teachings, and must analyze and consider the references as a whole.") (internal citation omitted; emphasis added). An ordinarily skilled artisan implementing the proposed combination would thus have also considered, among other things, Rosenberg's express disclosure that "<u>a typical embodiment of the invention would include a larger number of server computers</u>, say server computers **24**A through **24**N." (Rosenberg, 4:16-19 (underlining added).)

And even if there was a basis for Patent Owner's assumption that the frame tag embodiment could be used with only two servers within the entire server

network, Rosenberg discloses at least four alternative approaches for allowing a cooperating server to convey the unique identifier to other cooperating servers. (Response, at 11; EX2001, ¶¶49-50.) As Rosenberg explains:

> There are several ways in which an HTML reference to another site can be embedded in a page. Any of these methods can be used to implement the invention. Which method to choose depends on several factors, including the desired appearance of a page, the expected distribution of browsers (i.e., which features are implemented), whether requiring explicit user actions is desirable, etc.

(Rosenberg, 8:33-40.) For example, with reference to the frame tag approach discussed in the Petition, Rosenberg explains that "[a]n advantage of this approach is that the request will be made automatically, without the need for human action." (Petition, at 43 (quoting Rosenberg, 8:64-65).) But as an alternative to this approach, a first website can also convey a unique identifier to a second website using (1) a clickable hypertext link to the second site with a URL that includes the unique identifier (Rosenberg, 8:41-55), (2) an HTML form that causes the unique identifier to be sent to the second site (Rosenberg, 8:66-9:8), (3) an embedded HTML image tag whose URL points to the second site and includes the unique identifier (Rosenberg, (Rosenberg, 9:8-16), and (4) using standard "HTTP redirect" techniques in which the first site can cause the user's browser to navigate to a second site at a specified URL (Rosenberg, 9:18-24). (EX1019, ¶20.)

Accordingly, an ordinarily skilled artisan could have implemented the Rosenberg system under the proposed combination such that Server_A **24**A and Server_B **24**B adopted the invalidating frame tag approach, as fully described in the Petition. (Petition, at 30-34.) But for other cooperating servers in the Rosenberg server network, those could have employed one or more of the four alternative techniques described in Rosenberg. (EX1019, ¶21; Rosenberg, 8:34-35 ("Any of these methods can be used to implement the invention.").) For example, if a Rosenberg server network included 1,000 cooperating servers but only Server_A **24**A and Server_B **24**B used the frame tag embodiment, this would still be sufficient to fully satisfy the steps of claim 11 – even if other cooperating servers used different techniques that did not result in performance of the claim steps. *See, e.g.*, *Hewlett-Packard Co. v. Mustek Sys., Inc.*, 340 F.3d 1314, 1326 (Fed. Cir. 2003) ("Just as an accused product that sometimes, but not always, embodies a claimed method nonetheless infringes, a prior art [reference] that sometimes, but not always, embodies a claimed method nonetheless teaches that aspect of the invention.") (internal quotations and citations omitted).

D. An Ordinarily Skilled Artisan Would Not Have Been Discouraged From Using the Rosenberg Frame Tag Embodiment.

Patent Owner also argues that, despite Rosenberg's express disclosure of its frame tag embodiment, an ordinarily skilled artisan would have found it undesirable and would not have used it. Patent Owner contends that frames would have

increased "visual clutter" and would have required a website operator to give up a portion of its webpage to another website. (Response, at 20-21.)

Patent Owner's arguments do nothing more than confirm the unremarkable fact that the frame tag embodiment, as with almost all user interface decisions, would have offered both benefits and trade-offs. (EX1019, ¶22.) Rosenberg itself explains that the particular method to select for synchronization across servers "depends on several factors, including the desired appearance of a page, the expected distribution of browsers (i.e., which features are implemented), whether requiring explicit user actions is desirable, etc." (Rosenberg, 8:36-40.)

The Federal Circuit has explained that "[a] given course of action often has simultaneous advantages and disadvantages, and this does not necessarily obviate motivation to combine." *Allied Erecting & Dismantling Co., Inc v. Genesis Attachments, LLC*, 825 F.3d 1373, 1381 (Fed. Cir. 2016) (quoting *Medichem, S.A. v. Rolabo, S.L.*, 437 F.3d 1157, 1165 (Fed. Cir. 2006)). For example, an ordinarily skilled artisan would have weighed any so-called increase in "visual clutter" of the frame-based approach, as described by Patent Owner, against the benefits of displaying more information to the user within the browser window. (EX1019, ¶¶23-24.) As noted in the Petition, "HTML frames create independently changeable and (sometimes) scrollable windows that tile together to break up and <u>organize a display so that it's not only more visually appealing, but easier to work with</u>."

(Petition, at 28 (quoting Brown, EX1006, at p.0040) (underlining added); *see also* Brown, EX1006, p.0039 ("Prudent use of frames can make your HTML documents more organized, more easily navigable, and more impressive looking.").) Frames were often regarded as a superior way to present information from a second web page when compared, for example, to separate "pop-up" windows that users may have found distracting or annoying. (EX1019, ¶23.)

Patent Owner's expert also acknowledged at his deposition that an ordinarily skilled artisan would have had experience with user interface design and would have had experience with how frames work. (EX1020 at 11:13-12:10.) A skilled artisan would thus have been fully capable of weighing and balancing the relative benefits and trade-offs of the frame tag embodiment in Rosenberg. (EX1019, ¶24.)

Rosenberg itself provides an express motivation to use the frame tag embodiment over its other disclosed alternatives in that "the request will be made automatically, without the need for human action." (Rosenberg, 8:64-65.) The same cannot be said about two of Rosenberg's other alternatives, *i.e.*, the clickable hypertext link and HTML form, both of which require user action. (EX1019, ¶22; Rosenberg, 8:51-53 (hypertext link), 8:66-7 (HTML form).) And Rosenberg's other two remaining alternatives, *i.e.* embedded image tags and HTTP redirection, would not have resulted in display of content from the second site in the same organized manner and in the same browser window. (EX1019, ¶23.) A skilled artisan would

thus have been motivated to implement the frame tag in Rosenberg to obtain benefits not offered by the other disclosed alternatives.

Patent Owner cites Peter Dyson, *Internet Information Server 4* (EX2005) and another book by Jim Sterne, *World Wide Web Marketing* (EX2004), but these books do not support Patent Owner's arguments. (Response, at 20-22; EX2001, ¶¶62-64.) Neither of these references provides any discussion of HTML frames, let alone any statements that would have discouraged an ordinarily skilled artisan from implementing the frame tag embodiment in Rosenberg. (EX1019, ¶25.)

Patent Owner also claims that the approach of using frames would have "pose[d] significant stability concerns" as of the priority date. (Response, at 21-22.) These concerns are unsubstantiated. (EX1019, ¶26.) As of the assumed December 1999 priority date of the challenged claims, web browsers that supported HTML frames existed for years. Brown itself confirms that, as of its 1997 publication date, web browsers in use by "90 percent of your audience on the Web" supported HTML frames – including the two most widely used browsers from Netscape and Microsoft. (Brown, EX1006, at p.0039.) Rosenberg – which itself was filed in August 1996 – does not suggest that frames presented any stability concerns. The use of frames to load a second webpage, as described in Rosenberg, would have presented no significant technological obstacles by December 1999. (EX1019, ¶26.)

Patent Owner also contends that it would have been undesirable to use frames because of the additional time it would have taken to load the additional content from Server_B **24**B in the other frame. (Response, at 22.) But web pages as of December 1999 were considerably simpler and consumed less storage and network bandwidth than they do today, with many pages consisting of nothing more than HTML, text and some embedded images. (EX1019, ¶26.) Nothing in Rosenberg requires that the frames display bandwidth-intensive web pages, as both sides' experts agree. (EX1019, ¶26; EX1020 at 30:20-25.) And as with its other arguments, Patent Owner does not contend (nor could it) that an ordinarily skilled artisan would have been unable to weigh the relative benefits and trade-offs of the frame tag approach as applied to the particular web pages being displayed.

Patent Owner also goes on at length to argue that there would have been drawbacks of "cross-promotion of related sites," including by competitors. (Response, at 22-26; EX2001, ¶¶67-70.) Patent Owner supports this argument with a contrived scenario involving directly competing CNN and FOX news websites. (Response, at 24-25.) But Patent Owner's argument merely confirms the unremarkable fact that – of course – there may have been situations when a company may not want to display content from another company's website, such as when the two companies are direct competitors. *See KSR Int'l Co. v. Teleflex Inc.*, 550 U.S. 398, 421 (2007) ("A person of ordinary skill is also a person of ordinary creativity,

not an automaton.”). But nothing in Rosenberg suggests that the parties that control Server_A **24**A and Server_B **24**B would have been (or needed to be) competitors or otherwise adverse to one another. In the particular example in Rosenberg, in fact, the content shown in Server_B **24**B frame comes from a more generic search-related website “http://www.search.com” (Rosenberg, 8:56-65), suggesting that its content would have been complementary and not competitive to Server_A **24**A. Rosenberg does not identify any circumstances that would have made it undesirable (commercially or otherwise) for the webpage from Server_A **24**A to display a frame with content from Server_B **24**B. (EX1019, ¶¶27-28.)

Another example that would have been more plausible than the CNN/FOX hypothetical offered by Patent Owner, the frame showing content from Server_A **24**A could have displayed an article featuring information about a product, and the other frame from Server_B **24**B could have displayed content from the website of the vendor whose product was featured in the article. In any case, it would have been obvious that use cases would have existed in which the frame tag embodiment was beneficial and that would not have presented any of the concerns identified by Patent Owner. (EX1019, ¶28.) If this were not the case, Rosenberg would not have disclosed the frame tag embodiment in the first instance.

III. PATENT OWNER'S "URL REDIRECTION" ARGUMENT.

The Petition also explained how Rosenberg discloses that receipt of the partial profile is achieved "**as a result of automatic URL redirection**." (Petition, at 44-46; EX1002, ¶¶116-123.) Patent Owner does not dispute that Rosenberg discloses "**URL redirection**," and in fact, Patent Owner's expert assumed "that Petitioner's allegation of the use of a frame satisfies the meaning of 'URL redirection.'" (EX2001, ¶38.) Nor does Patent Owner dispute that the URL redirection in Rosenberg is "**automatic**." (Petition, at 42-43; EX1002, ¶117; Rosenberg, 8:64-65 ("An advantage of this [frame tag] approach is that the request [for the Server_B webpage] will be made automatically, without the need for human action.").) Patent Owner instead focuses entirely on the "**as a result of**" part of this limitation.[2]

---

[2] Prior to institution, Patent Owner argued that Rosenberg did not disclose receipt of the partial profile "**as a result of**" the automatic URL redirection because the partial profile would have been received after the user performed some action on the webpage provided by Server_B **24**B. The Board rejected this argument when it instituted IPR because "[t]he claim does not preclude intervening user action between the time of URL redirection and receipt of the partial profile." (Institution Decision, Paper 9, at 7.) Patent Owner acknowledges the Board's rejection of its

The Petition provided two separate theories as to why receipt of the partial profile in Rosenberg is achieved "**as a result of**" the claimed URL redirection. First, the URL redirection from Server_A **24**A caused the user's browser to access the webpage from Server_B **24**B in the first instance, which "in turn enabled the user to request news, product information and feature story pages from Server_B **24**B – thus generating the 'partial profile' as shown in Figure 3." (Petition, at 44; EX1002, ¶121.) In other words, but for the automatic URL redirection to the webpage provided by Server_B **24**B under the frame tag embodiment in Rosenberg, the partial profile information would not have been received.

Patent Owner responds to this first theory by arguing that it would have been possible for the user to bypass the frame-based webpage provided by Server_A **24**A by directly navigating to the webpage provided by Server_B **24**B. (Response, at 35-36; EX2001, ¶85.) But this argument is irrelevant. Federal Circuit law is clear that "a prior art [reference] that sometimes, but not always, embodies a claimed method nonetheless teaches that aspect of the invention." *Hewlett-Packard Co. v. Mustek Sys., Inc.*, 340 F.3d 1314, 1326 (Fed. Cir. 2003). In the particular embodiment in Rosenberg relied upon in the Petition, in which the webpage from Server_B **24**B

---

pre-institution argument and has not renewed it. (Response, at 39.) Nor could it, as the Board's conclusion on this issue was correct. (EX1019, ¶39.)

was automatically accessed via the frame-based web page provided by Server_A **24**A (Rosenberg, 8:56-65), the receipt of the partial profile from Server_B **24**B would have occurred "**as a result**" of automatic URL redirection, as explained in the Petition. (Petition, at 44-45.) Nothing in the claim excludes a system in which a receipt of the partial profile, at other times, may not be achieved as a result of automatic URL redirection. (EX1019, ¶41.) Claim 11 does not, for example, recite that the partial profile "can only be achieved" by automatic URL redirection.

Under the second theory, the Petition explained that receipt of the partial profile in Rosenberg was achieved "**as a result**" of automatic URL redirection because the redirection provided Server_B **24**B with the user's unique identification value ("i") that was contained in the URL. (Petition, at 45; EX1002, ¶¶122-123.) That unique identifier, as explained in the Petition, is used by Server_B **24**B to identify the user in transmitting the partial profile information to database server **25** for storage. (Petition, at 45-46; EX1002, ¶123.) Database server **25** thus received the partial profile "**as a result of**" the URL redirection under this second theory.

Similar to its response to the first theory discussed above, Patent Owner argues that it would have been possible for Server_B **24**B to send the partial profile to database server **25** even if the claimed automatic URL redirection had not occurred. (Response, at 37-38; EX2001, ¶¶87-88.) Patent Owner points to an alternative embodiment of Rosenberg in which, if Server_B **24**B does not receive

the unique identification value ("i") from Server_A **24**A, Server_B **24**B can assign its own new unique user identification value ("j") and use it to send the partial profile information to database server **25** for storage. (Response, at 37-38; EX2001, ¶88.) Patent Owner thus claims that the unique identification value ("i") from Server_A **24**A is not needed to enable Server_B **24**B to receive partial profile information from database server **25**. (*Id.*)

But this argument again violates the legal principle described above that invalidity is not avoided by merely arguing that Rosenberg only "sometimes" performs the steps of claim 11. *See Hewlett-Packard Co.*, 340 F.3d at 1326. The embodiment relied upon by Patent Owner is little more than a failsafe mechanism to address an unusual situation in which, due to an error condition or malfunction, Server_B **24**B was prevented from receiving the unique identification value ("i") from Server_A **24**A. (EX1019, ¶44.) As Rosenberg explains:

> FIG. 4 illustrates an <u>alternate technique</u> for implementing the invention. As **5** indicated in FIG. 4, steps **70**-**82** of FIG. 2 are executed. In the process of FIG. 4, <u>the information returned from Server **24**A includes the unique identification information, but that information does not reach other servers in the network</u>. This may occur if the instruction to pass the unique identification information to other servers is defeated by programming instructions associated with the client computer **22**, or the instructions to pass the unique identification information to other servers is defeated by some network interruption. In this case, it is

> noteworthy that the database still includes an entry for the unique identification value "i" (see step **80**).

(Rosenberg, 6:10-22 (underlining added).) Rosenberg goes on to explain that, in this situation, Server_B **24**B can assign a new unique identification value ("j"), and database server **25** can merge entries associated with the previous identification value ("i") with entries for the new value ("j"). (Rosenberg, 6:23-51.)

Patent Owner's reliance on this alternative embodiment establishes – at most – that there could be times when the system is not functioning properly such that the partial profile in Rosenberg is not received as a result of the claimed automatic URL redirection. But in the primary embodiment in Rosenberg relied upon in the Petition – in which the system functions properly and Server_B **24**B receives the unique identification value ("i") from Server_A **24**A – the partial profile would have been received "**as a result of**" the claimed automatic URL redirection. (Petition, at 45-46; EX1019, ¶45.) As noted, nothing in the claim excludes a method in which the partial profile may at other times be received without the claimed automatic URL redirection. *See Hewlett-Packard Co.*, 340 F.3d at 1326 ("[A] prior art [reference] that sometimes, but not always, embodies a claimed method nonetheless teaches that aspect of the invention.").

IV. PATENT OWNER'S "UNAFFILIATED THIRD PARTIES" ARGUMENT

Patent Owner appears to argue that Rosenberg teaches away from or otherwise discourages a combination with Zeff and Sterne for the "**unaffiliated third parties**" limitation, because "Rosenberg itself discloses that the servers participating in its network are '***related*** server computers.'" (Response, at 12 & EX2001, ¶52 (bold italics in original).) Patent Owner further argues that because "Rosenberg teaches that its servers are 'related,'" this "implies a close relationship between the companies." (Response, at 23 n.5.) But Patent Owner also concedes that Rosenberg does not spell out what "related" actually means in the context of describing its servers. (Response, at 12.)

Rosenberg contains only two references to "related" servers. (Rosenberg, 4:52-55, 7:66-8:2.) An ordinarily skilled artisan would have interpreted "related" in both instances as merely describing a *technological* relationship between the servers, namely that they observe a common protocol for providing unique user identification information. (EX1019, ¶33; Rosenberg, 4:52-59 ("The present invention operates by having a group of <u>related server computers</u>, say server computers **24**A-**24**N, <u>cooperatively</u> observe a common protocol, which is described below… By observing the common protocol, the group of server computers can track web browsers across distinct domains."), 7:66-8:2 ("As discussed above, after sending the unique identification value to the database **25**, the first server **24**A conveys the

cookie to a set of related servers, represented in this example as server B **24**B.") (underlining added to both).) This makes sense because Rosenberg, a *technical* patent describing the *technical* implementation of a profile sharing system, has no reason to delve into details about *legal* relationships between parties who control the servers. Patent Owner's expert acknowledged at his deposition that while an ordinarily skilled artisan "has some knowledge of website development and things of that nature," he or she "likely doesn't have legal knowledge." (EX1020, at 23:1-3.) Patent Owner's expert also acknowledged that a skilled artisan "wouldn't have things like contract knowledge…." (EX1020 at 22:14-15.)

Patent Owner thus identifies nothing in Rosenberg to suggest that "related" would have brought to a skilled artisan's mind anything about ownership of the servers or the legal relationships, if any, between the parties who own or control them. In fact, to the extent Rosenberg provides any suggestion about the relationships between parties who control the cooperating servers, Rosenberg suggests that they would have been unaffiliated because the servers operate under different domain names. (EX1019, ¶¶35-36; Rosenberg, 3:10-18.)

Finally, even if there was some merit to its interpretation of the word "related" in Rosenberg, Patent Owner does not explain how the two passing references to "related" servers in Rosenberg would have discouraged the proposed combination with Zeff and Sterne. As the Petition explained, the Firefly network described in

Zeff and Sterne already disclosed a proven, enormously successful and well-known business model offering the ability to share profile information with a large number of unaffiliated servers across the Internet. (Petition, at 39-42.) The fact that Rosenberg by itself may not expressly disclose that the servers are controlled by unaffiliated third parties is thus irrelevant. *See Bradium Techs. LLC v. Iancu*, 923 F.3d 1032, 1050 (Fed. Cir. 2020) ("A finding of obviousness… cannot be overcome 'by attacking references individually where the rejection is based upon the teachings of a combination of references.'") (citation omitted).

V. CONCLUSION

For the reasons stated above, and in the Petition, the Board should find the challenged claims unpatentable based on the instituted grounds.

Dated: October 11, 2023

Respectfully submitted,

By: /Heidi L. Keefe/
Heidi L. Keefe
Reg. No. 40,673
Counsel for Petitioner

COOLEY LLP
ATTN: Patent Group
1299 Pennsylvania Avenue NW
Suite 700
Washington, DC 20004
Tel: (650) 843-5001
Fax: (650) 849-7400

CERTIFICATE OF COMPLIANCE WITH WORD COUNT

Pursuant to 37 C.F.R. § 42.24(d), I certify that this reply complies with the type-volume limits of 37 C.F.R. § 42.24(c)(1) because it contains 4,766 words, based on the word-processing system used to prepare this reply, excluding the parts of this reply that are exempted by 37 C.F.R. § 42.24(a).

DATED: October 11, 2023

/ Heidi L. Keefe /
Heidi L. Keefe
Reg. No. 40,673

COOLEY LLP
ATTN: Patent Docketing
1299 Pennsylvania Ave. NW, Suite 700
Washington, D.C. 20004
Tel: (650) 843-5001
Fax: (650) 849-7400

CERTIFICATE OF SERVICE

I hereby certify, pursuant to 37 C.F.R. Section 42.6, that a complete copy of the attached **PETITIONER'S REPLY** and related documents are being served via electronic mail on the 11th day of October 2023, upon the Patent Owner's attorneys of record in this proceeding as follows:

Reza Mirzaie, Reg. No. 69,138
rmirzaie@raklaw.com
Jonathan Link, Reg. No. 41,548
jlink@raklaw.com
James A. Milkey, Reg. No. 79,503
jmilkey@raklaw.com
Amy E. Hayden, Reg. No. 64,817
ahayden@raklaw.com
Philip X. Wang, Reg. No. 74,621
pwang@raklaw.com
Benjamin T. Wang
bwang@raklaw.com
rak_almondnet@raklaw.com

DATED: October 11, 2023

/ Heidi L. Keefe /
Heidi L. Keefe
Reg. No. 40,673

COOLEY LLP
ATTN: Patent Docketing
1299 Pennsylvania Ave. NW, Suite 700
Washington, D.C. 20004
Tel: (650) 843-5001
Fax: (650) 849-7400

UNITED STATES PATENT AND TRADEMARK OFFICE

BEFORE THE PATENT TRIAL AND APPEAL BOARD

META PLATFORMS, INC.,
Petitioner,

v.

ALMONDNET, INC.,
Patent Owner.

IPR2022-01436
Patent 8,244,582

PATENT OWNER'S SUR-REPLY

TABLE OF CONTENTS

I. Introduction 1

II. Petitioner fails to show its proposed implementation of Rosenberg would have been obvious. 2

A. Petitioner sets forth no evidence that a POSITA would have been motivated to pursue Petitioner's proposed implementation of Rosenberg that would involve synchronizing IDs between only two servers at a given time. 2

B. A POSITA would have avoided the Reply's new alternative theory for the additional reason that it further deviates from Rosenberg's teachings that a "common protocol" should be applied across all of its servers. 13

C. Petitioner establishes no motivation to use Rosenberg's frame tag embodiment in its proposal. 17

III. Petitioner's combination does not receive a partial profile 'as a result of' URL redirection. 23

IV. Conclusion 26

TABLE OF AUTHORITIES

Cases

Belden Inc. v. Berk-Tek LLC,
805 F.3d 1064 (Fed. Cir. 2015).....7, 14, 20

PATENT OWNER'S EXHIBIT LIST

No.	Description
2001	Declaration of Robert Sherwood in support of Patent Owner's Response ("Sherwood Decl.")
2002	*Curriculum vitae* of Robert Sherwood
2003	June 29, 2023 deposition transcript of Christopher Schmandt ("Schmandt Tr.")
2004	Sterne, *World Wide Web Marketing* (2d ed. 1999) ("Sterne II")
2005	Dyson, *Mastering Microsoft Internet Information Server 4* (2d ed. 1998)

I. Introduction

In Reply, Petitioner relies on modifications to Rosenberg's system that would significantly alter the way that reference operates. Specifically, Petitioner proposes a hindsight-driven implementation of Rosenberg that would involve numerous servers participating in Rosenberg's system, with Rosenberg's ID-synchronization technique applying to only ***two*** of those servers at any given time. Petitioner proposes this theory despite Rosenberg's clear teachings (and the recognition of Petitioner's expert) that ID synchronization applies to ***all*** participating servers. *See* Ex. 1003 ("Rosenberg") at 5:28-31 (explaining that a server will synchronize an identifier with "***each server*** in the network of servers that is operating in accordance with the invention");[1] Ex. 2003 ("Schmandt Tr.") at 23:9-25:12 (Petitioner's expert testifying that regarding synchronization of identifiers, Rosenberg's "Server A would be doing the same thing [i.e., synchronizing identifiers] with respect to ***all of*** [the participating servers]").

Fatal to Petitioner's theory, Petitioner has not even ***alleged*** that a POSITA would have been motivated to modify Rosenberg's teachings to synchronize identifiers between only a subset of participating servers. Instead, Petitioner pretends that its proposed implementation does not constitute ***any*** technical modification to

[1] All emphases herein are added unless otherwise specified.

Rosenberg. *See* Reply at 4 (contending Petitioner's theory involved no "technical modification to the system of Rosenberg"). In doing so, Petitioner fails to allege (much less show) a motivation to modify Rosenberg as Petitioner's theory requires.

The Petition's theories are likewise deficient with respect to how a "partial profile" is obtained "as a result of" URL redirection. The Petition's only theories as to how this limitation is satisfied are that the alleged URL redirection either A) ***enables*** receiving profile information, or B) that a unique identifier is ***needed*** to receive profile information. But Petitioner admits in Reply that neither is true, confirming Patent Owner's arguments made in its Response.

Accordingly, all challenged claims should be found not unpatentable.

II. Petitioner fails to show its proposed implementation of Rosenberg would have been obvious.

A. Petitioner sets forth no evidence that a POSITA would have been motivated to pursue Petitioner's proposed implementation of Rosenberg that would involve synchronizing IDs between only two servers at a given time.

Petitioner argues that a POSITA would have been motivated to combine Rosenberg with the "Firefly system" described in Zeff and Sterne to arrive at a combined system in which "a ***broad range*** of third-party websites" would be able to operate. Pet. at 39-41 (discussing Zeff and Sterne's discussion of "Firefly," which

was allegedly "already a commercially-successful and widely-available embodiment of the same type of profile sharing system described in Rosenberg"); Reply at 5 n.1 (stating that Zeff and Sterne's descriptions of Firefly are not relied on for "any technical modifications to Rosenberg"). In other words, Petitioner's theory involves a system design that could handle numerous participating servers (and certainly more than two), because otherwise the system would be unable to work with "a broad range of third-party websites" as the Petition explicitly alleges. *See* Schmandt Tr. at 12:8-13:12 (explaining that "Firefly had a variable [] number" of servers, and that "it would be rather foolish to build a system like Rosenberg just to synchronize two servers").

Petitioner's lead reference—Rosenberg—makes clear that the synchronization of data between its websites involves "convey[ing] the unique identification information to ***each*** ***server in the network of servers that is operating in accordance with the invention."*** Rosenberg at 5:28-31; Schmandt Tr. at 23:9-25:12 (Petitioner's expert acknowledging that when a user visits Server A, "Server A would be doing the same thing with respect to all of [the participating servers]"); Ex. 2001 ("Sherwood Decl.") at ¶45 ("A POSITA would understand, as Rosenberg teaches and Mr. Schmandt recognizes, that [Rosenberg's] 'common protocol' would be used to synchronize unique identifiers between ***all*** of the participating servers in the system.") (emphasis in original, citing Rosenberg at 3:28-30, 5:28-33). In other

words, when a user visits any one of the "broad range" of servers Petitioner alleges would be included in Rosenberg's network, Rosenberg teaches that the visited server will convey the user's unique identifier to ***all*** of the other servers in Rosenberg's network.

In spite of the above, Petitioner's Reply makes clear that its obviousness theory only involves synchronizing unique identifiers between pairs of just ***two*** websites at a given time, and no more. Specifically, the Reply argues that "[a]ny number of ***server pairs*** in Rosenberg's network could have employed the exact same frame tag technique to allow a ***first*** cooperating server to convey the unique user identification to a ***second*** cooperating server." Reply at 6-7 ("[T]hat same approach could have been used by and distributed across many different ***server pairs*** throughout the network."). Petitioner's expert likewise admits that the theory of the Petition would be limited to the use of "server ***pairs*** to allow a first server to convey the unique user identification to, and display information from, a second server." Ex. 1019 at ¶ 18. It follows that for any given visit to a website, the Reply's theory would only synchronize the visitor's unique identifier between exactly ***two*** servers at a given time using Rosenberg's frame tag embodiment.

Thus, the Reply's theory presents a significant technical modification to Rosenberg: disregarding Rosenberg's teaching that Server A would convey the user's unique identifier to ***all*** participating servers, and instead modifying the system

such that Server A would only convey the user's unique identifier to a ***single*** other participating server.

Although Petitioner contends that it proposes no technical modification to Rosenberg's system (*see* Reply at 4, 5 n.1), Petitioner cannot explain how its proposed implementation of Rosenberg (specifically, using visible frame tags to synchronize unique identifiers between just two servers) could have operated consistently with Rosenberg's teachings that identifiers are synchronized between ***all*** servers of the "broad range" of servers Petitioner's theory entails.

Petitioner's proposed implementation of Rosenberg is also inconsistent with the admissions of Petitioner's expert, who asserted that under the theory of the Petition, Rosenberg's servers would be synchronizing the unique identifiers for ***all*** servers in the system, rather than only synchronizing the identifier between one other server as the Reply newly alleges. *See* Ex. 2003 ("Schmandt Tr.") at 23:9-21 ("Q. [W]here do you specify how Server A would synchronize identifiers between more than one server? A… [I]t's obvious that Figure 1 [of Rosenberg] is a simplified representation, and as a simplified representation, there could be a 44-A, a 44-B, a

44-C, and a 44-D, all of which would be part of the system. And ***Server A would be doing the same thing with respect to <u>all</u>*** of them.”).[2]

Petitioner does not present any evidence that a POSITA would have been motivated to modify Rosenberg such that a server visited by a user would synchronize the user’s unique identifier with only ***one*** other server, rather than with ***all*** participating servers. Indeed, Petitioner cannot present evidence that ***any*** technical modifications to Rosenberg would have been obvious, given Petitioner’s assertion in Reply that its theory does not involve any “technical modification” to Rosenberg’s system at all. *See* Reply at 4 (alleging that “Patent Owner cannot identify a single statement in the Petition suggesting any technical modification to

[2] This testimony was in the context of Mr. Schmandt’s failure to identify where in his declaration he explained how identifiers would be synchronized between more than two servers. *See generally* Schmandt Tr. at 22:18-26:18. Given the clear inconsistencies between (1) Petitioner’s articulation of its theory in Reply and (2) how Petitioner’s expert described the theory of the Petition, it is clear that the Petition itself failed to sufficiently explain “[h]ow the construed claim is unpatentable” under the grounds of the Petition, as required by 37 C.F.R. § 42.104. This is an additional reason all challenged claims should not be found unpatentable.

the system of Rosenberg"); *id.* at 5 n.1 ("Petitioner cited Rosenberg in combination with Zeff and Sterne, but not to propose any technical modifications to Rosenberg."); *see also* Ex. 1019 at ¶ 13 (Petitioner's expert contending that Petitioner's theory "did not propose … any changes whatsoever to how the described Rosenberg system operates"). As shown above, however, Petitioner clearly ***does*** propose changes to the technical operation of Rosenberg's system, and thus explicitly fails to motivate those changes.[3]

---

[3] The fact that Petitioner fails to motivate the proposed implementation of Rosenberg is also clear from the manner in which the Reply discusses its proposals. For example, the Reply states that "[a]ny number of server pairs in Rosenberg's network ***could have*** employed the exact same frame tag technique." Reply at 6. The Reply similarly asserts that "for other cooperating servers in the Rosenberg server network, those ***could have*** employed one or more of the four alternative techniques described in Rosenberg." Reply at 9. These arguments about how a POSITA ***could have*** implemented Rosenberg miss the point of an obviousness analysis, which requires a showing of what modifications a POSITA "*would have been motivated to make*." *See Belden Inc. v. Berk-Tek LLC*, 805 F.3d 1064, 1073 (Fed. Cir. 2015) ("[O]bviousness concerns whether a skilled artisan not only *could have made* but

Given that Petitioner fails to motivate the proposed modification to Rosenberg's system, Petitioner cannot show that that modification would have been obvious. Because that modification is the basis for the invalidity theory applicable to all grounds of the Petition, all challenged claims should not be found unpatentable for that reason alone. Patent Owner nevertheless provides several reasons why a POSITA would ***not*** have been motivated to implement the Petition's proposed modification to Rosenberg.

First, as discussed above, Rosenberg clearly and explicitly teaches that when a user visits a server in Rosenberg's network, the ID synchronization occurs between ***all*** participating servers. Petitioner's proposal, where ID synchronization would only happen between ***one*** other server, would decrease the functionality of Rosenberg's system, because conveying the unique identifier to other servers allows those other servers to later recognize the user. Indeed, the Petition recognizes that the "unique identification value is ***critical*** to Rosenberg," and that the ID synchronization process helps different servers in the network maintain a consistent user identity. *See* Pet. 45-46. The Petition further acknowledges that the unique identifier would be used by every Rosenberg server to obtain profile information. Pet. at 51 ("Rosenberg

---

would have been motivated to make the combinations or modifications of prior art to arrive at the claimed invention.") (emphases in original).

makes clear that the profile information could also have been used by Server_A 24A, or ***any other cooperating server 24 in which a cookie has been stored with the unique identifier***" (citing Rosenberg at 7:51-55; Ex. 1002, ¶¶129, 104)); *see also* Ex. 1019, ¶11. In other words, the Petition acknowledges that Rosenberg beneficially synchronizes the unique identifier amongst ***all*** servers, and that Rosenberg's servers use that synchronization to assist in storing and retrieving tracking information in Rosenberg's database for a given user. Thus, configuring the system to synchronization IDs between Server A and only one other server, instead of between Server A and ***all*** participating servers, would impact the efficiency with which Rosenberg could track and maintain user profile information, and a POSITA would have avoided such a configuration.

Indeed, Petitioner's own expert acknowledged that it would be "***silly***" to use the same frame layout provided by the Petition at page 32 (and reproduced below), which synchronizes identifiers between only two servers (Server_A and Server_B) if the number of participating servers in Rosenberg's system were increased.

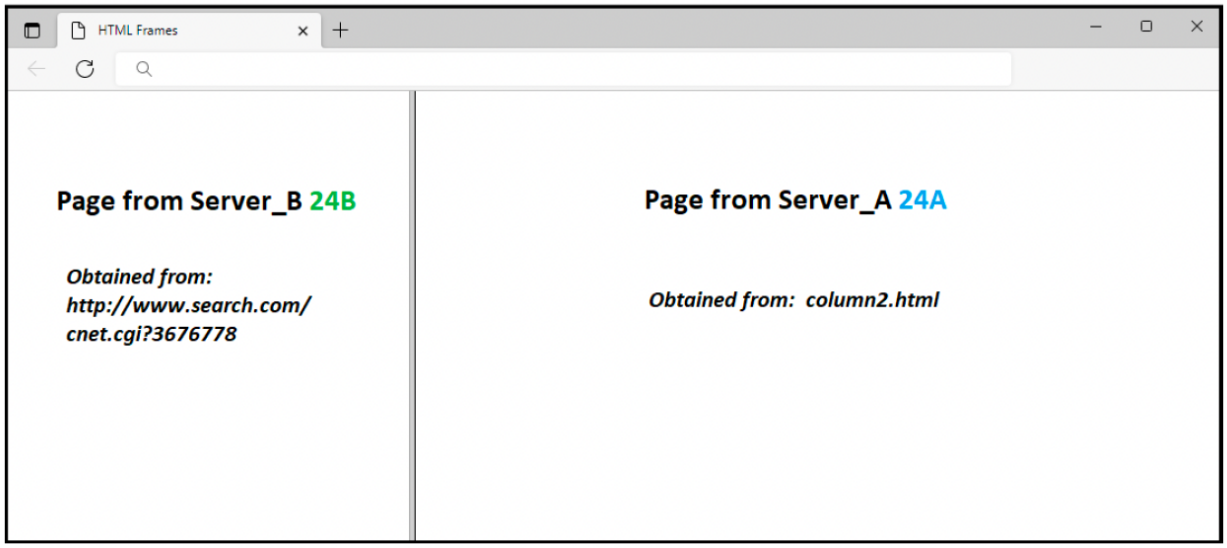

Pet. 32.

> Q. Okay. ***So in your opinion, the frame layout would be exactly the same for Server A's web page if there were a hundred different servers within Rosenberg's network or [2] different servers*** within Rosenberg's network?
>
> A. ***No, of course not. It's silly.*** But it would use the same technique. Frames. There's no limitation in the frame HTML construct that says frames are limited to two.

Ex. 2003 (Schmandt Tr.), 25:13-21. The fact that Petitioner's own expert acknowledged that a two-frame layout would be "silly" as applied to an implementation of Rosenberg with a hundred different servers is strong evidence that a POSITA would have actively avoided the Petition's proposed implementation of Rosenberg (in which a two-frame layout would be used to synchronize identifiers between only two participating servers at any given time).

The only way for the Petition's theory (synchronizing unique identifiers between a given ***pair*** of servers) to be consistent with Rosenberg's teachings (that unique identifiers are synchronized amongst ***all*** of Rosenberg's servers) is if Rosenberg were implemented to apply to only two servers in total, because then all two of Rosenberg's servers would have access to the "critical" unique identifier information. *See* Pet. 45 (recognizing that the "unique identification value is critical to Rosenberg"); Ex. 1002, ¶122 (same). But as explained in Patent Owner's Response (and not disputed by Petitioner in Reply), such an implementation of Rosenberg would be "rather foolish" and thus would not have been an obvious implementation of Rosenberg in view of Zeff and Sterne's description of the Firefly system. *See* POR at 14-20 (quoting Schmandt Tr. at 13:9-12); *see also* Pet. 40 (asserting that the Petition's combination of Rosenberg with Firefly would involve "a ***broad range*** of third-party websites").

Furthermore, Petitioner's theory involves different servers each having a different ID synchronization server partner. *See* Reply at 6 ("Any number of server pairs in Rosenberg's network could have employed the exact same frame tag to allow a ***first*** cooperating server to convey the unique user identifier to convey the unique user identification to a ***second*** cooperating server, and display information from both servers in a dual-frame web page"); *id.* at 6-7 (alleging that "the frame tag embodiment in Rosenberg could also have been used with a 'Server_C' and

'Server_D,' a 'Server_E' and 'Server_F,' and so forth, across an arbitrary number of cooperating servers," such that the "same approach could have been used by and distributed across many different server pairs throughout the network").[4] But this approach requires each server to know which other server it is "paired" with, and use a protocol that would use a frame to synchronize an identifier with its paired server. Because ***each*** server would have its own unique protocol to convey the identifier to its specific paired server, that would violate Rosenberg's teachings that each server follows a "***common*** protocol." Rosenberg at 4:52-55 ("The present invention operates by having a group of related server computers, say server computers 24A-24N, cooperatively observe a ***common protocol*** …."); *see also* Ex. 2003 (Schmandt Tr.), 24:8-25:12 (Petitioner's expert implying that his declaration did not need to explicitly explain how other servers in Rosenberg would synchronize identifiers, because each server in Rosenberg follows a "common protocol," regardless of "whether Server A is referencing one other server or 18 other servers").

[4] Petitioner's theory in this regard is further deficient because, by requiring "[a]ny number of server ***pairs***," (Reply at 6), Petitioner's theory inexplicably disregards how its implementation of Rosenberg's system would accommodate an ***odd*** number of servers.

In sum, the Petition proposes a significant modification to Rosenberg's system, which would deviate from Rosenberg's teachings that the unique identifier be conveyed to ***all*** participating servers and that each server follow a common protocol. Petitioner does not even attempt to articulate a motivation to pursue such a modification, and in fact there are numerous reasons a POSITA would have avoided such a modification.

B. A POSITA would have avoided the Reply's new alternative theory for the additional reason that it further deviates from Rosenberg's teachings that a "common protocol" should be applied across all of its servers.

For the first time in Reply, Petitioner contends that "an ordinarily skilled artisan could have implemented the Rosenberg system under the proposed combination such that Server_A 24A and Server_B 24B adopted the invalidating frame tag approach, as fully described in the Petition," but "for <u>other</u> cooperating servers in the Rosenberg server network, those could have employed one or more of the four alternative techniques described in Rosenberg." Reply at 9 (underlining in original). As an initial matter, Petitioner's argument explicitly alleges that a POSITA "***could have*** implemented the Rosenberg system" (*id.*), not an allegation that a POSITA ***would have*** been motivated to implement the Rosenberg system. As such, the Petition has not even alleged, much less shown, a motivation to implement

Rosenberg's system in the alleged manner. *Belden Inc. v. Berk-Tek LLC*, 805 F.3d 1064, 1073 (Fed. Cir. 2015) ("[O]bviousness concerns whether a skilled artisan not only *could have made* but *would have been motivated to make* the combinations or modifications of prior art to arrive at the claimed invention.") (emphases in original).

Nor could the Petition do so, because Rosenberg clearly teaches that its system uses a "***common*** protocol" to synchronize identifiers, not a patchwork approach of ***varying*** protocols that the Reply newly speculates could be used. *See* Rosenberg at 4:52-55 ("The present invention operates by having a group of related server computers, say server computers 24A-24N, cooperatively observe a ***common protocol*** …."). Indeed, before submitting his Reply declaration, Petitioner's expert acknowledged that ***all*** of Rosenberg's servers "observe a common protocol" and are thus "designed to work together ***in the same way***":

> ***Q. So where in your declaration do you specify how Server A would synchronize unique identifiers between Server B, Server C, Server D, Server E ad nauseam?***
>
> A. Okay. I will be glad to tell you. So I will note in Paragraph 47 that I'm citing Rosenberg, this backs up what I just said. It says Figure 1 illustrates two server computers, 24-A and 24-B, although a typical embodiment of the invention may include a larger number of server computers, say server computers 24-A through 24-N.
>
> And then of course, Paragraph 48, again talking about Rosenberg, Rosenberg says by observing the common protocol, the

> group of server computers can track the browsers across distinct domains.
>
> So we've already established above that the group of servers could include an arbitrary number, and here ***Rosenberg makes it clear that they observe a common protocol. So they are designed to work together in the same way.*** Common protocol, okay?
>
> Q. Okay. So ***where in your declaration do you state what that common protocol would be for a group of servers more than just 24-A and 24-[B]?***
>
> A. ***It's the same protocol***. It makes no difference whether Server A is referencing one other server or 18 other servers. They all have the same protocol. If you had one server, you had one stat.

Ex. 2003 (Schmandt Tr.), 24:8-25:12.

Thus, as explicitly taught by Rosenberg and acknowledged by Petitioner's expert, Rosenberg does not teach a combination of various protocols to synchronize identifiers across its websites. Instead, Rosenberg and Petitioner's expert make clear that Rosenberg uses a "common protocol" amongst its various servers. Thus, a POSITA would not have modified Rosenberg's system to apply a different synchronization protocol for different participating servers.[5]

---

[5] The Petition's failure to set forth "[h]ow the construed claim is unpatentable" under the grounds of the Petition, as required by 37 C.F.R. § 42.104, is once again

The Reply's speculation about how a POSITA "could have implemented Rosenberg's system" is further inconsistent with Rosenberg's teachings because that modification where "Server_A 24A and Server_B 24B adopted the [supposedly] invalidating frame tag approach" would only involve Server A synchronizing a unique identifier between exactly ***one*** other server. Reply at 9 (stating that this approach is "***fully*** described in the Petition" and citing Pet. at 30-34); *see also* Pet. at 30-34 (describing only how to synchronize an identifier between two servers using the frame tag approach). As explained above in Section II.A, a POSITA would not have been motivated to pursue such an approach because it is inconsistent with Rosenberg's teachings that the unique identifier is communicated to ***all*** participating servers in the system.

---

made clear by the inconsistencies between the Reply's new theory (that different servers would use different synchronization techniques) and the deposition admissions of Petitioner's expert that under the Petition's theory, all servers would use the same synchronization technique.

C. Petitioner establishes no motivation to use Rosenberg's frame tag embodiment in its proposal.

Petitioner contends in Reply that a POSITA would not have been discouraged from using Rosenberg's frame tag approach. *See* Reply at 9-14. This is incorrect for several reasons.

First, as discussed above in Section II.A, Petitioner's theory involves synchronization between only a ***pair*** of servers out of the "broad range of" servers to which Petitioner contends its implementation would apply, despite (1) the admissions of its expert that such a system would be "silly," and (2) Rosenberg's teaching that synchronization would occur among ***all*** participating servers. And Petitioner never alleges that a POSITA would have been motivated to implement visible frame tags to synchronize identifiers between any more than two participating servers at a time. Thus, for the reasons explained in Section II.A, a POSITA would not have been motivated to apply the frame tag approach to Petitioner's combination of Rosenberg with Firefly, because that approach would be limited to synchronizing identifiers between only two participating servers, contrary to Rosenberg's teachings. This alone is sufficient to show that a POSITA would not have implemented the frame tag approach in the manner suggested by Petitioner.

Second, Petitioner does not allege any advantages to its proposed frame tag approach over "embedded image tags and HTTP redirection." *See* Reply at 11-12.

While the Reply asserts in conclusory fashion that these other approaches "would not have resulted in display of content from the second site in the same organized manner and in the same browser window" (Reply at 11), the Reply does not provide any evidence that a POSITA would have recognized display of content from the second site in this context as being a ***benefit*** that would have motivated the proposed implementation.

To the contrary, Petitioner's expert's own example at deposition reveals an undesirable circumstance of using Rosenberg's frame tag embodiment. Specifically, when asked at his deposition for "any example [of websites] that makes sense for this combination," Petitioner's expert gave the example of direct competitors (CNN and Fox) cross-promoting each other. Schmandt Tr. at 15:13-17 ("Q. . . . I'm just trying to come up with any example that makes sense for this combination. So can you give me a website that could be Server A? A. Sure. Let's say CNN.com."); *id.* at 17:6-8 ("Q. But what is Server B? A. You want an example? Let's say it's Fox dot com."). And while Petitioner faults Patent Owner for raising this "CNN/FOX hypothetical" (Reply at 14), ***Petitioner's own expert's*** hypothetical involved the undesirable outcome of cross-promotion of direct competitors.[6]

[6] Petitioner's attempt to walk back this specific hypothetical proposed by its own expert is further inconsistent with Mr. Schmandt's assertion that the use of a frame

In POR, Patent Owner pointed out that this would be an undesirable outcome. POR at 23-26 (citing Sherwood Decl. ¶¶68-71). Petitioner appears to concede that the CNN/Fox hypothetical offered by its expert as an example of websites that "makes sense for this combination" is not particularly "plausible." Reply at 14. In an attempt to distance itself from this adverse hypothetical, Petitioner's Reply alleges a different "example that would have been more plausible" in which "the frame showing content from Server_A 24A could have displayed an article featuring information about a product, and the other frame from Server_B 24B could have displayed content from the website of the vendor whose product was featured in the article." Reply at 14. However, this is merely a conclusory allegation of what "could have" been done. Indeed, Petitioner in Reply does not allege, as it must, that a

---

tag on one page to display another web page "would make sense" for "pretty much any page." Schmandt Tr. at 14:5-21. Mr. Schmandt's lack of familiarity with the drawbacks of using visible frames to synchronize identifiers may be because he was not even familiar with that technique until Petitioner's attorneys provided him with the Rosenberg reference, and "Rosenberg is the only reference [he is] aware of" that disclosed the use of visible frames to synchronize identifiers. *See* Schmandt Tr. at 26:19-28:18.

POSITA ***would have been motivated*** to implement such a solution. *Belden*, 805 F.3d at 1073.

The Petition provides no evidence whatsoever that this approach would be seen as desirable by a POSITA. For example, even modern-day articles that discuss products will typically just show a product image and a link to the vendor site, rather than reproduce the entirety of the vendor site within a frame.[7] Furthermore, even assuming *arguendo* that Petitioner's theory in Reply is hypothetically advantageous, the Petition cites to no evidence that a POSITA would have ***recognized*** any advantages of the proposed "article reproducing a vendor's web page using a frame tag" approach as of the priority date of the '582 Patent. For example, Petitioner does not allege that this possibility was ***ever*** previously implemented, and provides no analysis as to why a POSITA would have independently invented such an idea. At most, the Reply alleges that a POSITA "could have" pursued such an implementation (Reply at 14), but that is not the relevant question for obviousness. *Belden*, 805 F.3d at 1073.

Nor does Petitioner allege that a POSITA would have had a reasonable expectation of success in implementing such a solution. This analysis that Petitioner

[7] *See, e.g.*, https://slate.com/technology/2022/12/gift-guide-good-enough-2022-gadgets-skincare-home.html.

neglected to undertake is not trivial—for example, it would require that ID synchronization frames of Rosenberg be tailored to individual articles, requiring a huge time investment for a website that may upload dozens of articles daily. Furthermore, there is no evidence that this solution would be generally applicable to the "common protocol" within Rosenberg's system; rather, it would likely, at most, apply only to specific web pages featuring articles featuring a product available for purchase.

Perhaps recognizing that there is no evidence that Petitioner's hypothetical would have been obvious, Petitioner further contends that "[i]n any case, it would have been obvious that use cases would have existed in which the frame tag embodiment was beneficial and that would not have presented any of the concerns identified by Patent Owner." Reply at 14. But other than the "use case" of an article reproducing a vendor's web page using a frame tag (which Petitioner has presented no evidence would have been obvious to a POSITA), Petitioner tellingly does not identify any supposedly "obvious" "use cases." And whether individual, beneficial "use cases" for frame tags might exist does not mean that it would have been obvious to incorporate frame tags ***in the Petition's proposed combination*** of Rosenberg with Firefly, particularly given that Rosenberg teaches that a "common protocol" applies to its entire system, and does not suggest that its protocol should be re-designed on

an ad-hoc basis depending on what a particular designer believes is best-suited to any given web page.

It is also no answer for Petitioner to contend that "Rosenberg would not have disclosed the frame tag embodiment" if the Petition's proposed implementation were not obvious. Reply at 14. The fact that Rosenberg disclosed the use of a frame (without stating that the frame must remain visible) as a possible way to synchronize identifiers in the illustrative example of only ***two*** "related servers" (Rosenberg at 8:56-65, Sherwood Decl. ¶ 67) does not mean that a POSITA would have found it obvious to implement a visible frame tag in a system whose goal is to work across "broad range" of unaffiliated servers as the Petition alleges. *See* Schmandt Tr. at 19:10-21:10 (Petitioner's expert suggesting the idea of using *invisible* frames, during questioning about various drawbacks resulting from the use of *visible* frames);[8] Pet.

[8] The visibility of the frame is important, because Petitioner's theory ***requires*** that the frame be visible in order to "track[] information about user activity." Pet. at 32-33; POR at 32-33. Specifically, the Petition asserts that "the user in Rosenberg is also ***accessing*** Server_B 24B and thereby generating new user activity information ("partial profile") by requesting content from that server, the user is continuing to access the Server_A 24A website ("accessing a website") ***because that website remains simultaneously visible*** and active ***within a frame*** of the same web browser

40 (confirming that the Petition's theory involves "a ***broad range*** of third-party websites").

III. Petitioner's combination does not receive a partial profile 'as a result of' URL redirection.

Petitioner's Reply acknowledges that the Petition only "provided two separate theories as to why receipt of the partial profile in Rosenberg is achieved "as a result of" the claimed URL redirection." Reply at 16. But, as explained in Patent Owner's Response, neither of the Petition's theories explains how the partial profile information is received "as a result of automatic URL redirection. POR at 35-39. And nothing in Petitioner's Reply cures these deficiencies, nor could it, because setting forth alternative theories in this regard would be inappropriate at this stage.

The Petition's first theory requires that the redirection itself "***enabled*** the user to request news, product information and feature story pages from Server_B 24B—thus generating the 'partial profile.'" Pet. at 44-45; Paper No. 9 (Institution Decision) at 18. However, Petitioner does not explain or identify how the redirection ***enables*** the transmission of a partial profile. POR at 35-36. Indeed, as Patent Owner made

---

window." Pet. at 33-34 (citing Ex. 1002, ¶100 (stating that "the 'partial profile' contains tracking information about user activity" when "both websites were accessed by and simultaneously visible to the user in separate frames").

clear in its Response, and as Petitioner does not challenge in Reply, "the user can submit requests that result in profile information being transmitted to database server 25 without the alleged redirection." POR at 36. In other words, the Petition's "enable" theory of redirection does not make transmission of a partial profile possible, nor is it a necessary prerequisite for the transmission of a partial profile. A partial profile can be transmitted using any number of methods. Indeed, Petitioner's own expert acknowledges that "the user in Rosenberg could have directly navigated to and accessed Server_B 24B via its web browser without accessing the frame-based webpage provided by Server_A 24A (for example by entering the URL for Server_B 24B into the web browser address bar)." POR at 36 (quoting Ex. 1002 ¶101). Thus, the redirection does not "enable" the transmission of a partial profile under the Petition's first theory.

The Petition's second theory fares no better. Here, the Petition alleges that Rosenberg's "user identification value" is "***needed*** in order to receive the 'partial profile.'" POR at 37. (quoting Pet. at 45-46). Again, the Petition does not establish that the user identification value is ***needed*** for Rosenberg's system to receive a partial profile. POR at 37-39. Indeed, Petitioner in Reply admits that "in at least one of Rosenberg's techniques, '<u>the information returned from Server 24A includes the unique identification information, but that information does not reach other servers in the network</u>.'" Reply at 18-19 (quoting Rosenberg, 6:10-22) (underlining in

original); *see also* Reply at 19 (admitting "there could be times when the system is not functioning properly such that the partial profile in Rosenberg is not received as a result of the claimed automatic URL redirection").

But even when redirection does not occur (e.g., through an error or malfunction), the database of Rosenberg's system will ***still*** receive the partial profile. *See* POR at 37-39. Indeed, Rosenberg's Figure 4 and accompanying disclosure identifies an "alternate technique" wherein "database server 25 is able to receive the alleged partial profile information from server 24B (as well as store the profile information in association with the user), even if Server_A is unable to transmit a unique identifier to Server_B via the alleged redirection." POR at 38. While Petitioner attempts to relegate this technique to something other than "the primary embodiment in Rosenberg relied upon in the Petition" (Reply at 19 (underlining in original)), Petitioner does not dispute this technique is used by Rosenberg's system in the event that Server_B does not receive the unique identification value. And while the Reply attempts to argue that this technique would only be used in response "to an error condition or malfunction," that simply shows that that is irrelevant as to whether the unique identifier is "needed" in order to receive the partial profile: the unique identifier is ***not*** needed, precisely because Rosenberg discloses its system is configured in a way such that the partial profile can be received in the event of an error or malfunction in which the unique identifier is not received.

And while Patent Owner acknowledges that the Board stated that "Petitioner has sufficiently demonstrated that Rosenberg discloses limitation [11(b)]" (Institution Decision at 23), that conclusion was primarily based on understanding Patent Owner's preliminary response as arguing that the claim limitation "precludes intervening user action between automatic URL redirection and receipt of the partial profile" (*id.* at 23), an argument not currently advanced by Patent Owner. Rather, the Petition's theories fail on their own terms. As discussed above, the ***Petition's theories require*** that URL redirection either "enable" transmission of a partial profile, or that a user identification value is "needed" to receive a partial profile, neither of which is true.

IV. Conclusion

For the reasons set forth herein and in Patent Owner's Response, all challenged claims should be found not unpatentable.

Date: November 22, 2023

Respectfully submitted,

/James A. Milkey /

James A. Milkey, Reg. No. 79,503
Russ, August & Kabat
12424 Wilshire Blvd., 12th Floor
Los Angeles, CA 90025

Counsel for Patent Owner

CERTIFICATION REGARDING WORD COUNT

Pursuant to 37 C.F.R. §42.24(d), Patent Owner certifies that there are 5,513 words in the paper excluding the portions exempted under 37 C.F.R. §42.24(a)(1).

Date: November 22, 2023

/James A. Milkey /

James A. Milkey, Reg. No. 79,503
Russ, August & Kabat
12424 Wilshire Blvd., 12th Floor
Los Angeles, CA 90025

Counsel for Patent Owner

CERTIFICATE OF SERVICE (37 C.F.R. § 42.6(e)(1))

The undersigned hereby certifies that the above document was served on November 22, 2023, by filing this document through the Patent Trial and Appeal Case Tracking System as well as delivering a copy via electronic mail upon the following attorneys of record for the Petitioner:

Heidi L. Keefe (Reg. No. 40,673)
Philip E. Morton (Reg. No. 57,835)
Andrew C. Mace (Reg. No. 63,342)
Mark R. Weinstein (*pro hac vice*)
COOLEY LLP
1299 Pennsylvania Ave. NW, Suite 700
Washington, DC 20004
hkeefe@cooley.com
pmorton@cooley.com
amace@cooley.com
mweinstein@cooley.com

Date: November 22, 2023

/James A. Milkey

RUSS AUGUST & KABAT
12424 Wilshire Blvd., 12th Fl.
Los Angeles, CA 90025
(310) 826-7474

James A. Milkey
Reg. No. 79,503
Attorney for Patent Owner