US 20060271690A1

(19) United States

(12) Patent Application Publication

(10) Pub. No.: US 2006/0271690 A1

(43) Pub. Date: Nov. 30, 2006

Banga et al.

(54) DEVELOPING CUSTOMER RELATIONSHIPS WITH A NETWORK ACCESS POINT

(76) Inventors: **Jaz Banga**, San Francisco, CA (US); **Nitin Shah**, Cupertino, CA (US); **Brijesh Patel**, Gilroy, CA (US); **Amul Patel**, Pacifica, CA (US)

Correspondence Address:
CARR & FERRELL LLP
2200 GENG ROAD
PALO ALTO, CA 94303 (US)

(21) Appl. No.: **11/433,070**

(22) Filed: **May 11, 2006**

Related U.S. Application Data

(60) Provisional application No. 60/680,330, filed on May 11, 2005.

Publication Classification

(51) **Int. Cl.**
G06F 15/16 (2006.01)

(52) **U.S. Cl.** **709/228**

(57) **ABSTRACT**

Systems and methods for developing customer relationships with a network access point are provided. In exemplary embodiments, access information and a device identifier is received from an access point. The access information and device identifier may be stored within a device record. A user profile is generated using at least some of the information contained within the device record. A user preference is then provided to identify and maintain relationships with users. The user preference can comprise at least some of the user profile.

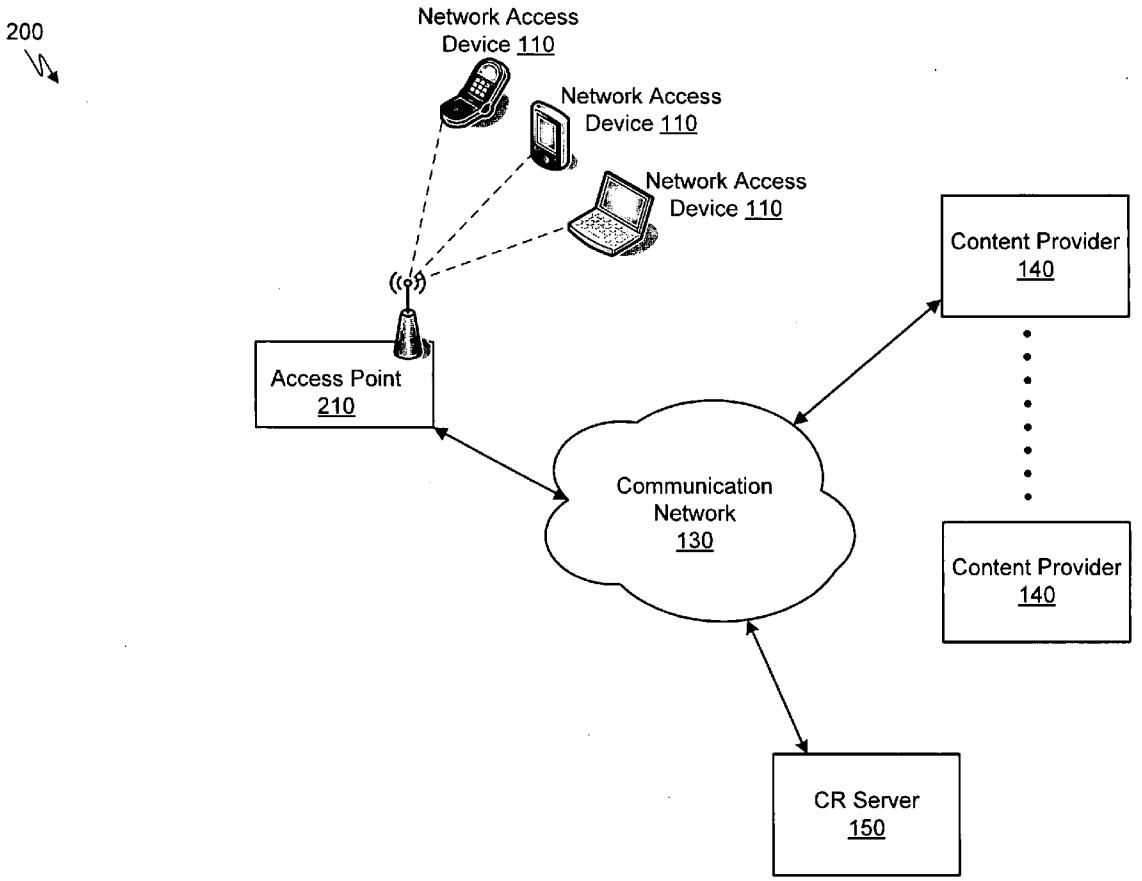

FreeWheel, Ex. 1014

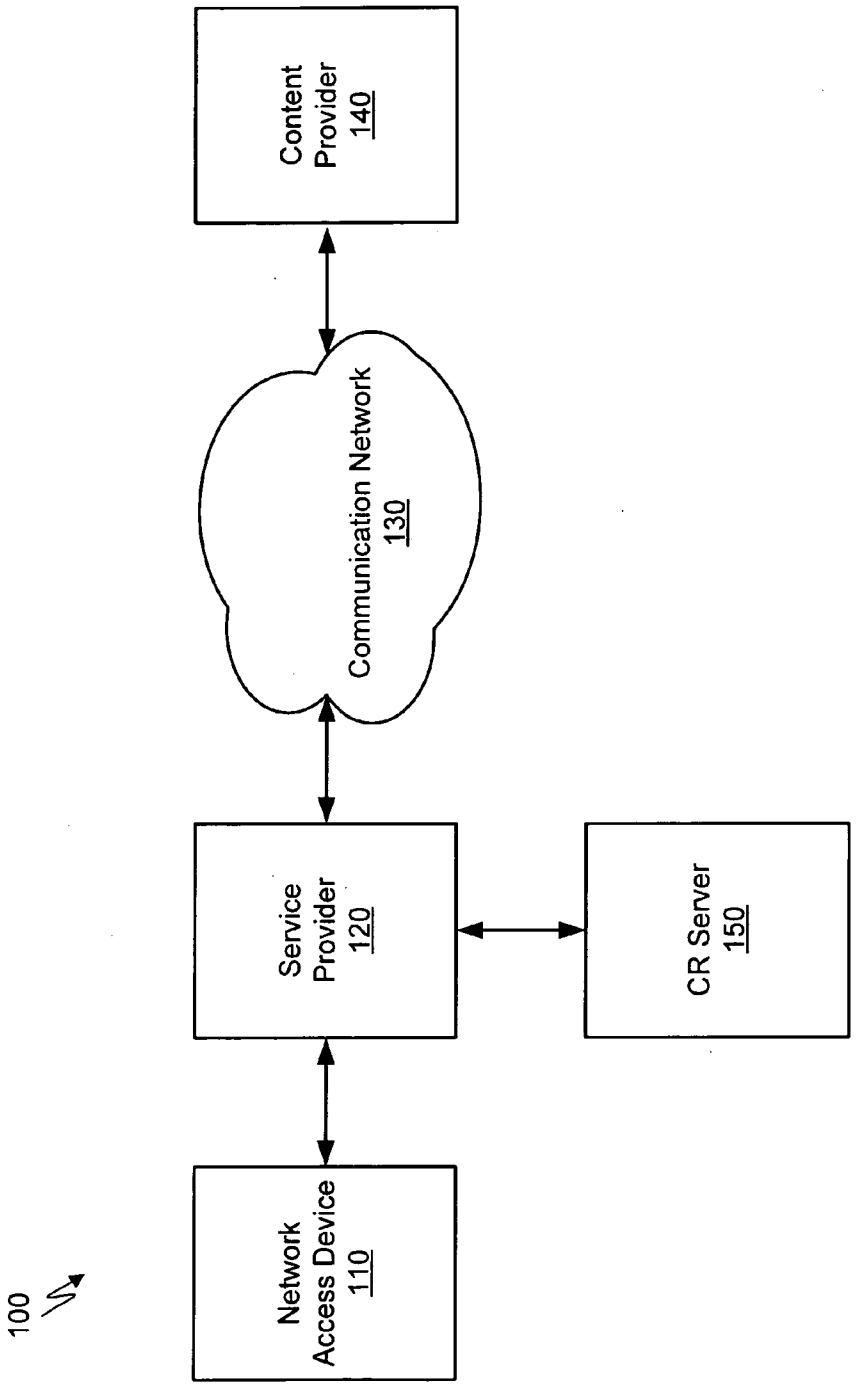
100
Network Access Device 110
Service Provider 120
CR Server 150
Communication Network 130
Content Provider 140

FIG. 1

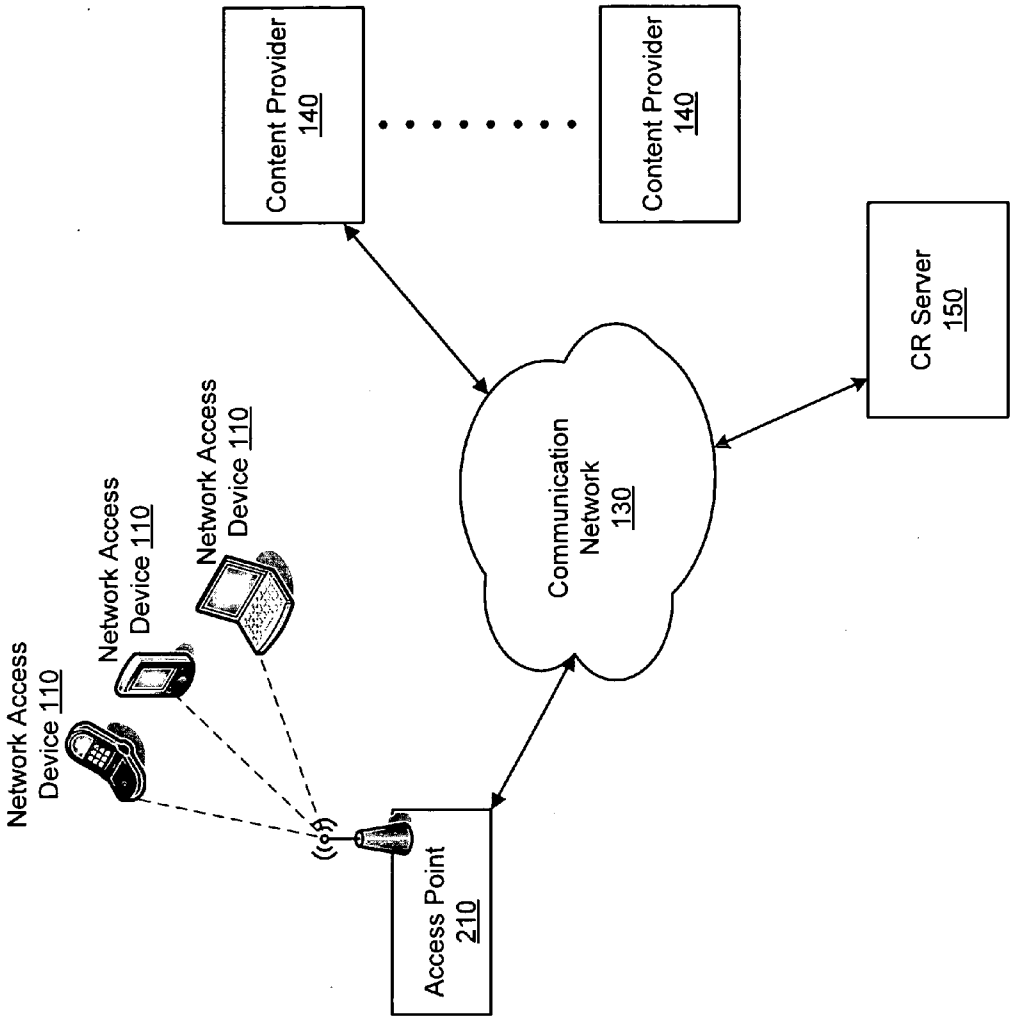
Content Provider 140
Content Provider 140
CR Server 150
Communication Network 130
Network Access Device 110
Network Access Device 110
Network Access Device 110
Access Point 210

FIG. 2

200

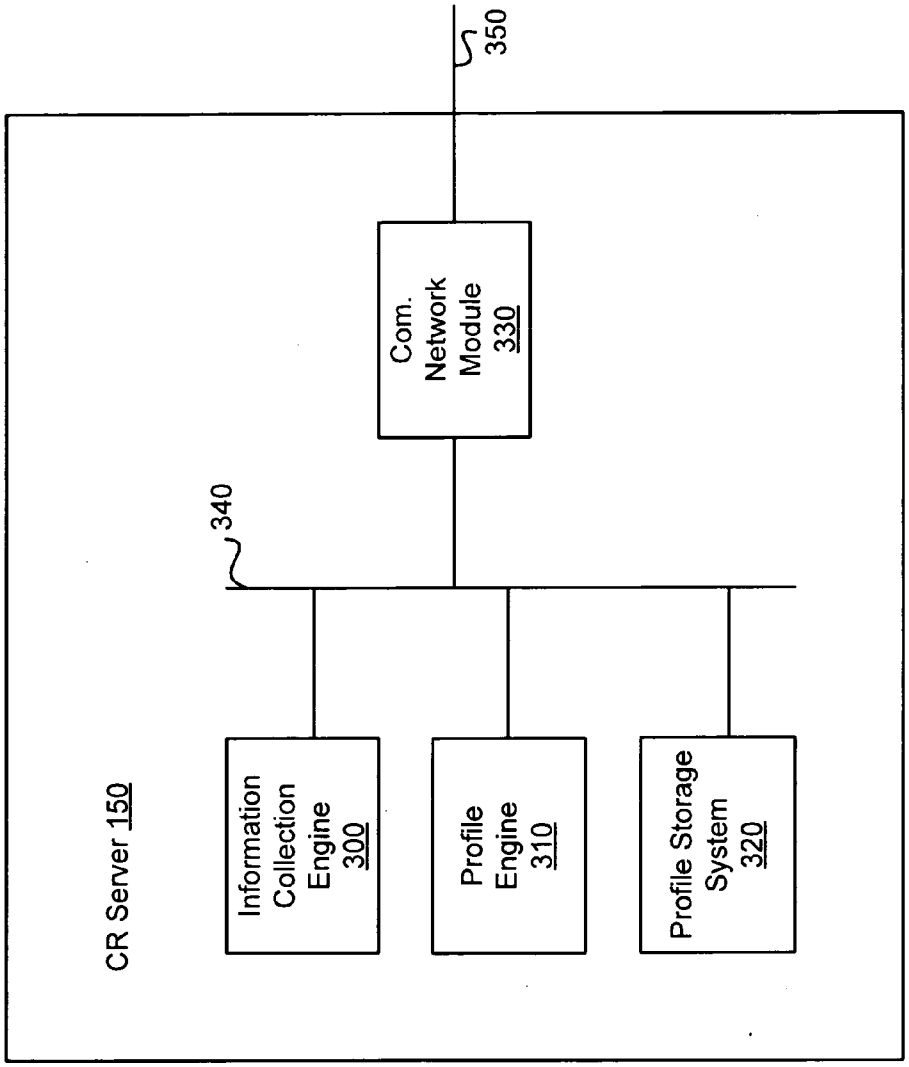
CR Server 150
Information Collection Engine 300
Profile Engine 310
Profile Storage System 320
340
Com. Network Module 330
350

FIG. 3

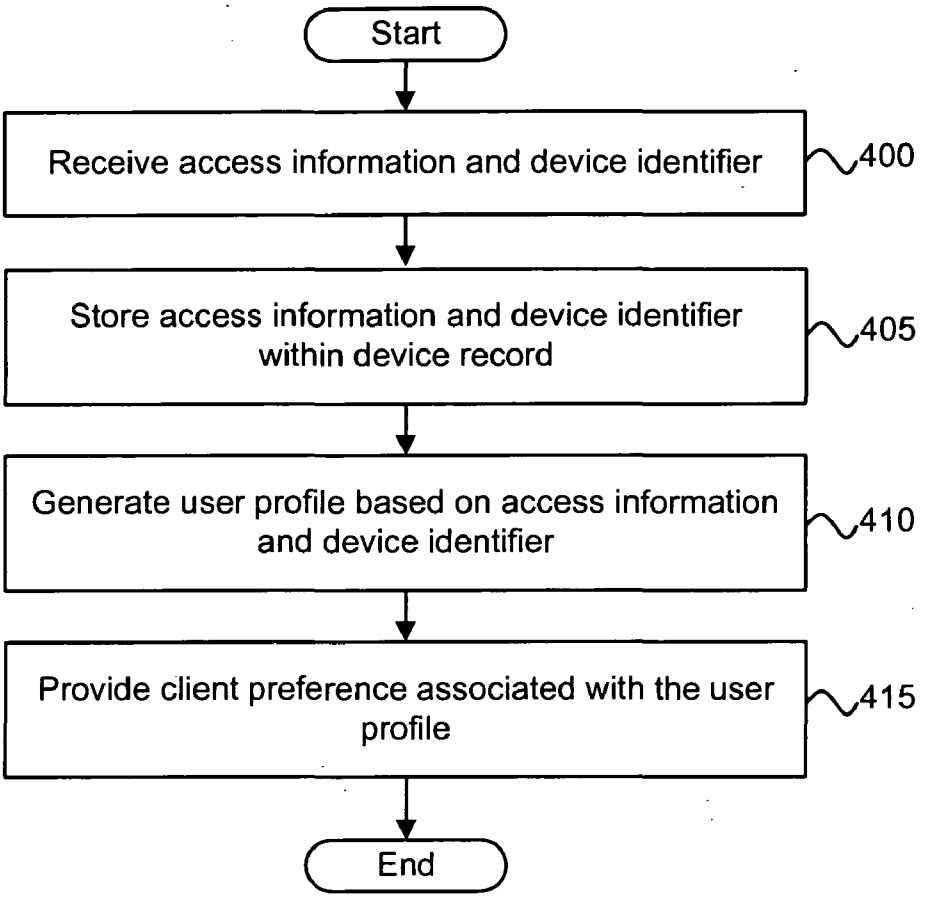
Start
Receive access information and device identifier
400
Store access information and device identifier within device record
405
Generate user profile based on access information and device identifier
410
Provide client preference associated with the user profile
415
End

FIG. 4

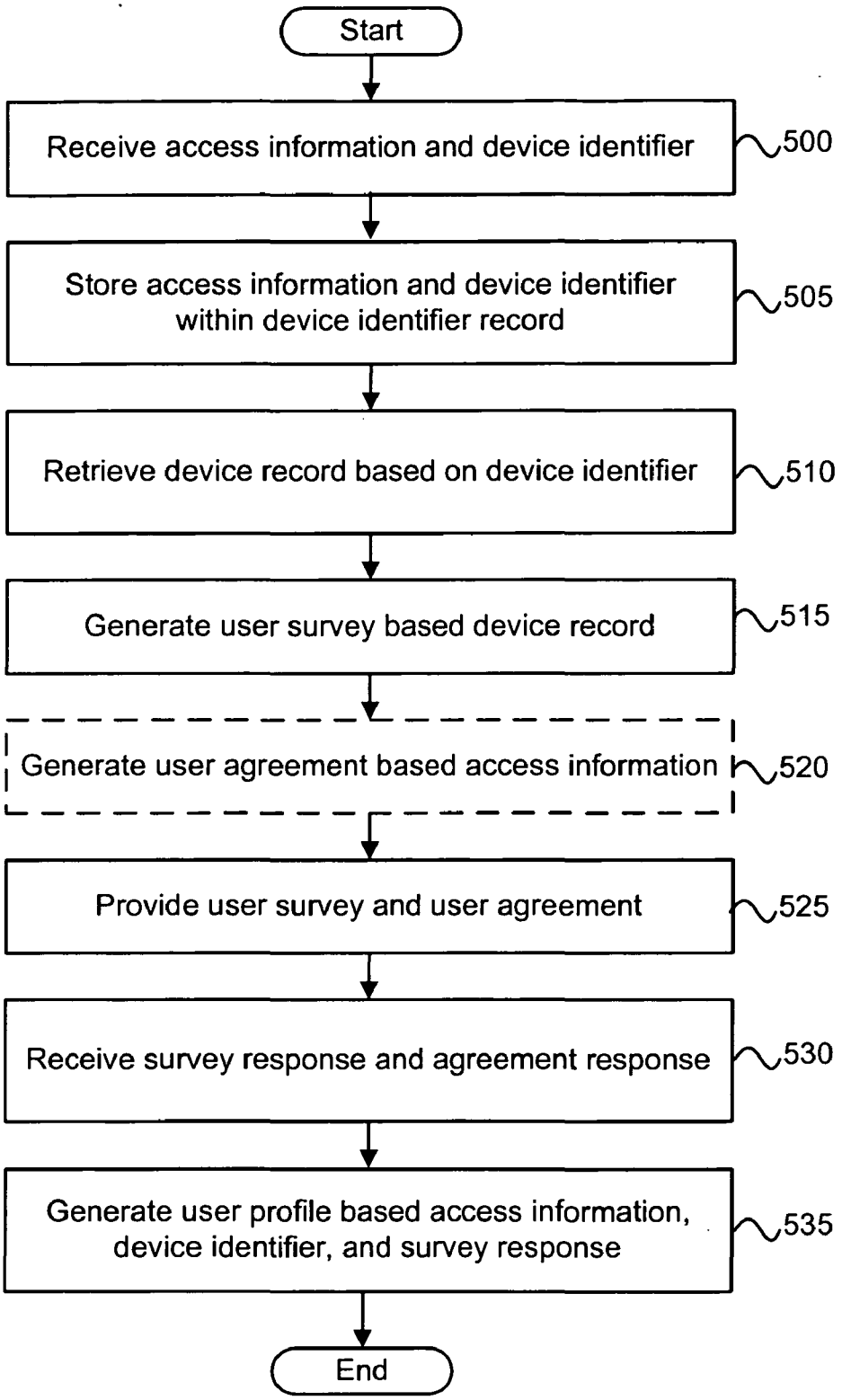
Start
Receive access information and device identifier
500
Store access information and device identifier within device identifier record
505
Retrieve device record based on device identifier
510
Generate user survey based device record
515
Generate user agreement based access information
520
Provide user survey and user agreement
525
Receive survey response and agreement response
530
Generate user profile based access information, device identifier, and survey response
535
End

FIG. 5

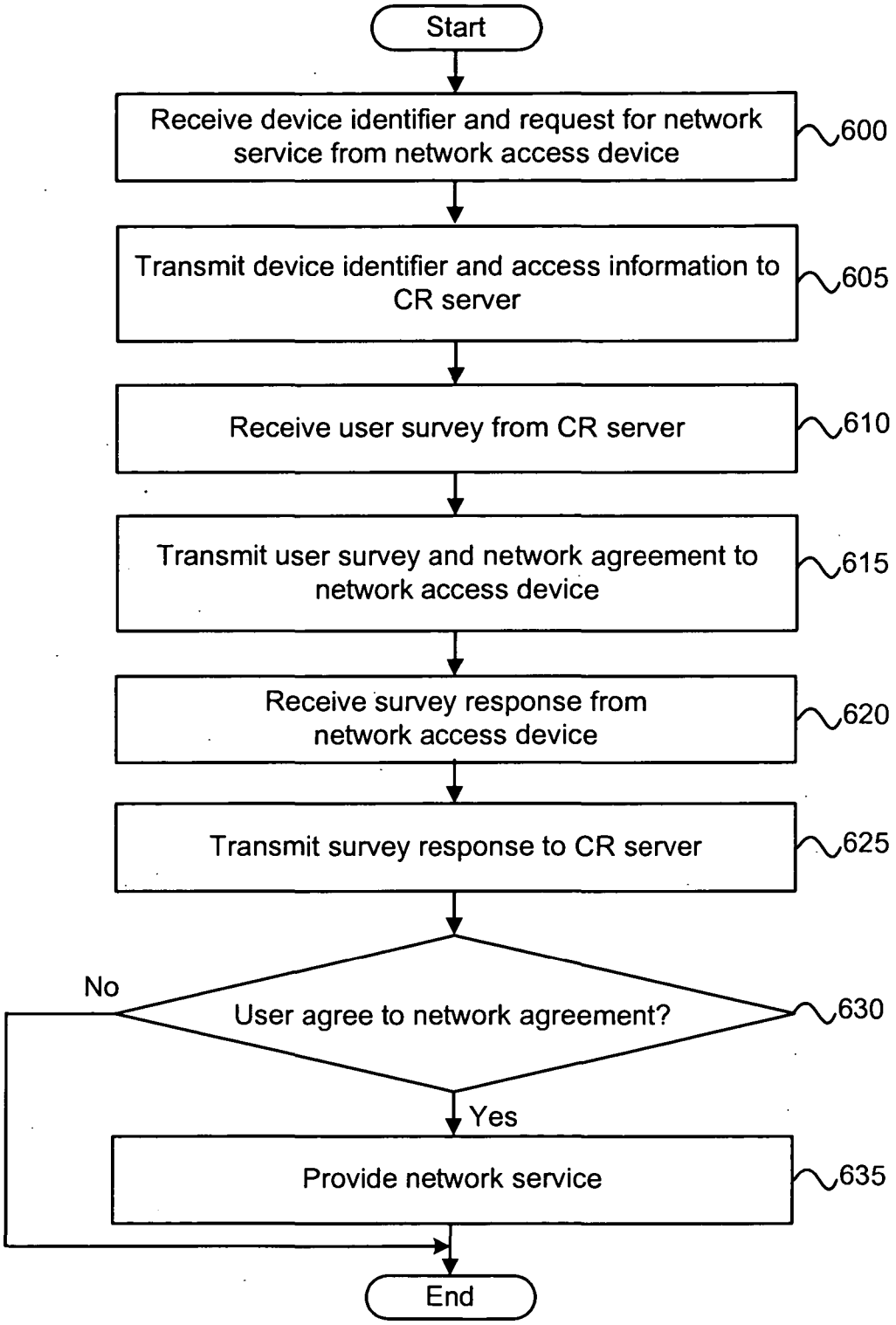
Start
Receive device identifier and request for network service from network access device
600
Transmit device identifier and access information to CR server
605
Receive user survey from CR server
610
Transmit user survey and network agreement to network access device
615
Receive survey response from network access device
620
Transmit survey response to CR server
625
User agree to network agreement?
630
No
Yes
Provide network service
635
End

FIG. 6

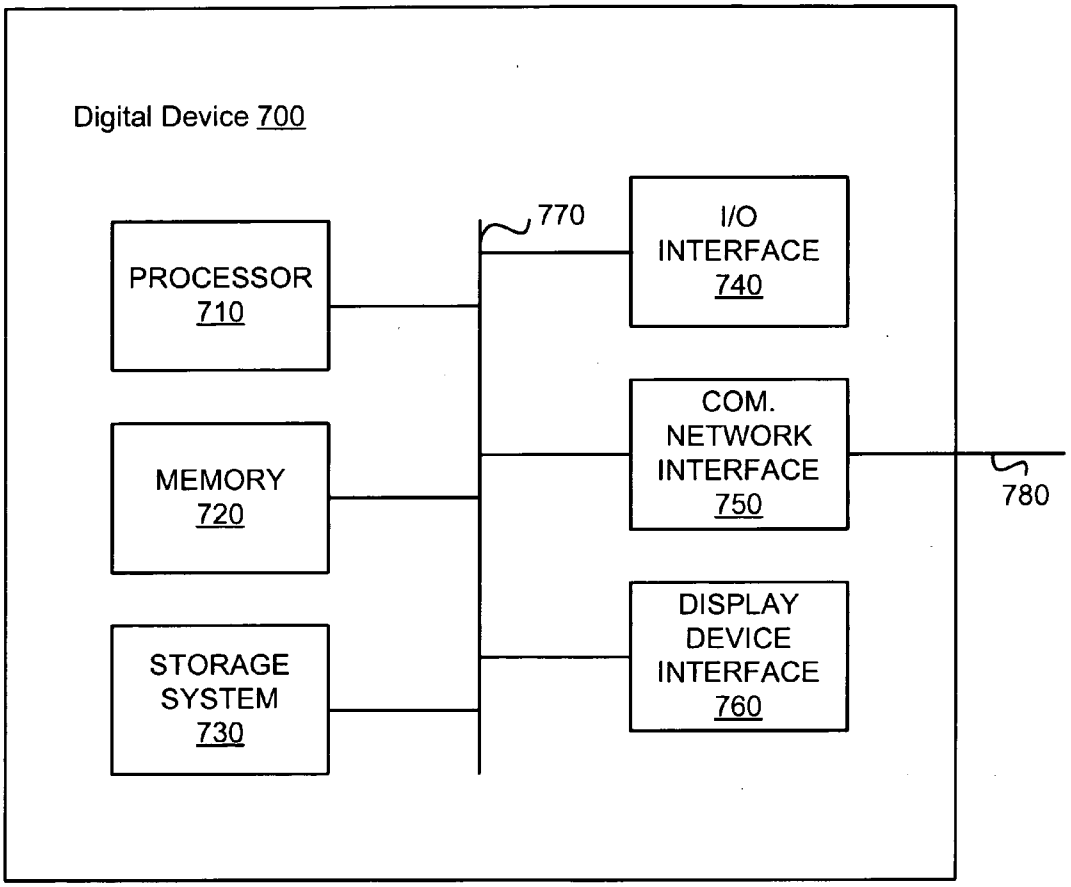
Digital Device 700
PROCESSOR 710
MEMORY 720
STORAGE SYSTEM 730
770
I/O INTERFACE 740
COM. NETWORK INTERFACE 750
DISPLAY DEVICE INTERFACE 760
780

FIG. 7

DEVELOPING CUSTOMER RELATIONSHIPS WITH A NETWORK ACCESS POINT

CROSS-REFERENCE TO RELATED APPLICATIONS

[0001] The present application claims the benefit of U.S. Provisional Patent Application Ser. No. 60/680,330 entitled "Systems and Methods of Network Operation and Information Processing, Including an Access Point" filed May 11, 2005 the disclosure of which is incorporated herein by reference.

BACKGROUND OF THE INVENTION

[0002] 1. Field of the Invention

[0003] Embodiments of the present invention are related to developing customer relationships, and more particularly to developing customer relationships with an access point.

[0004] 2. Related Art

[0005] As the number of Internet users grows, content providers and advertisers are having increased difficulty in identifying, creating, and maintaining relationships with their user base. Relationships are limited by current technology. Generally, users interact with content providers and advertisers by accessing a web site on the Internet over a computing device. Users have traditionally been identified by either the user's current destination on the Internet through personal accounts or through downloaded programs on the user's computing device (e.g., cookies).

[0006] Many content providers request or require personal accounts from users. When a user creates a personal account, the user is often requested to register and provide personal information that helps the content provider to identify and maintain a relationship with that user. Unfortunately, many users do not register. As a result, many users may stop visiting the content provider's web site. Further, even if a user does create a personal account, the user is often required to login before receiving services or content. Logging in to each web site the user wishes to visit takes time and the user can forget required passwords and usernames.

[0007] Other content providers place cookies on user's computing devices. A cookie is a small text file or program that certain Internet sites attach to the user's hard drive within the computing device. A cookie can contain information such as a user identifier, user preferences, shopping information, personally identifiable information, and a list of web sites previously visited. As the user revisits a content provider's web site, the content provider can retrieve the cookie to identify the user and then update the cookie as appropriate. Many users, however, view cookies as an invasion of privacy. As such, many users disable the function that allows cookies to be stored on their computing devices. Further, users can erase their cookies manually or purchase anti-spyware and anti-virus programs which either prevent cookies from downloading or delete cookies entirely (e.g., cookie chum.)

[0008] Therefore, there is a need for systems and methods for creating and developing customer relationships on the Internet.

SUMMARY OF THE INVENTION

[0009] Embodiments of the present invention provide systems and methods for developing customer relationships with a network access point. In exemplary embodiments, a method for providing a user preference comprises receiving access information and a device identifier associated with a request for network service from an access point, storing the access information and the device identifier within a device record, generating a user profile based at least in part on the device identifier and the access information within the device record, and providing a user preference associated with the user profile.

[0010] The method may further comprise providing a user survey associated with the device identifier, receiving a survey response associated with the user survey, and storing the survey response within the device record. The method may also further comprise providing a user agreement.

Further, the method may further comprise generating a web page with a user agreement to receive network service and transmitting the web page to a network access device.

[0011] The access information may comprise an access point identifier. The device identifier may comprise a media access control address or an international mobile station identity. The device record can also be stored within a database.

[0012] The user profile may be further based on the survey response. The user profile may also identify at least one individual characteristic of a user or at least one group characteristic of a group of users. The user preference may also be encrypted.

[0013] A system for providing a user profile can comprise a profile engine configured to receive access information and a device identifier associated with a request for network service from an access point, store the access information and the device identifier within a device record, generate a user profile based at least in part on the device identifier and the access information within the device record, and provide a user preference associated with the user profile.

[0014] A machine-readable medium having embodied thereon a program, the program being executable by a machine and configured to receive access information and a device identifier associated with a request for network service from an access point, store the access information and the device identifier within a device record, generate a user profile based at least in part on the device identifier and the access information within the device record, and provide a user preference associated with the user profile.

BRIEF DESCRIPTION OF THE DRAWINGS

[0015] **FIG. 1** is an exemplary block diagram of a system employing embodiments of the present invention.

[0016] **FIG. 2** is an alternative exemplary block diagram of a system employing an embodiment of the present invention.

[0017] **FIG. 3** is a block diagram of the customer relationship server, according to one embodiment of the present invention.

[0018] **FIG. 4** is a flowchart of an exemplary method for providing a user preference to develop customer relationships.

[0019] **FIG. 5** is a flowchart of another exemplary method for providing a user preference.

[0020] **FIG. 6** is a flowchart of a method used in an access point in an exemplary embodiment of the present invention.

[0021] **FIG. 7** is a block diagram of a digital device according to one embodiment of the exemplary embodiment of the present invention.

DETAILED DESCRIPTION OF EXEMPLARY EMBODIMENTS

[0022] Referring to **FIG. 1**, an exemplary system **100** in which embodiments of the present invention may be practiced is shown. Unlike many examples of the prior art where users are tracked through cookies on their computing devices (not shown) or the sites the users visit over the Internet, users can be identified and their preferences determined through the user's act of logging onto a network or obtaining network service through a service provider **120** (further discussed below.)

[0023] The system **100** comprises a network access device **110**, a service provider **120**, a communication network **130**, a content provider **140**, and a client relationship server ("CR server") **150**.

[0024] In some embodiments, a potential network user activates a network access device **110**. A potential network user is any user that seeks network access over the network access device **110**. A network access device **110** is any digital device capable of communicating over a network. The digital device is further discussed in **FIG. 7**. Examples of network access devices **110** include, but are not limited to, computers, laptops, personal digital assistants, and cellular telephones. Each network access device **110** may contain a device identifier such as a media access control address (i.e., "MAC" address), an international mobile station identity (i.e., "IMSI" identity), or an international mobile equipment identity (i.e., "IMEI" identity.)

[0025] The service provider **120** is a device configured to provide the network access device **110** access to the communication network **130**. In some examples, the service provider **120** is a switch, bridge, gateway, router, hub, cable modem, phone modem, access point, base station, or combination of these. The service provider **120** is typically controlled by a business that supplies network connectivity (e.g., Internet service provider "ISP".) In one example, the service provider **120** assigns external IP addresses to network access devices **110** seeking access to the communication network **130**.

[0026] The communication network **130** comprises a means for connecting two or more network access devices **110** configured to communicate with each other. In some embodiments, the communication network **130** is the Internet, a wide area network (WAN), a local area network (LAN), an intranet, or an extranet. In one example, the user accesses the communication network **130** with the network access device to visit a website provided by the content provider **140**.

[0027] The content provider **140** is any device configured to provide information to users of network access devices **110** over the communication network **130**. In some embodiments, the content provider **140** is a web site. In other embodiments, the content provider **140** is an emailer or a file transport site (FTP) site. The content provider **130** is typically controlled by an individual, group, or business that provides information for viewing or distribution over the communication network **130**. In some embodiments, content provided may comprise data, video, audio, or software. In one example, a content provider **140** is a news web site that provides news, advertisements, video, and audio. In another example, a content provider **140** is an advertisement server that serves advertisements to other content providers **140** (e.g., new sites.)

[0028] The CR server **150** is any device (not just a server) configured to identify one or more network access devices **110** seeking access to the communication network **130** and generate a user profile. The user profile may be used to build and develop relationships between users of the network access devices **110** and the owners or agents of products and/or services. The CR server **150** may be coupled to the network access device **110**, the service provider **120**, or the communication network **130**. The CR server **150** can be a device and targeting database server ("DTD Server" or "DTDS").

[0029] In one example, a computer user operates a network access device **110** to connect to the communication network **130**. The user is identified and the user's preferences determined by the CR server **150** based on the number of times the user seeks communication network **130** access, where the user seeks access, and any other available information. Unlike many examples within the prior art, the CR server **150** may not place cookies on the computer user's network access device **110** nor does the CR server **150** monitor the content providers **140** that the user visits. Rather, the CR server **150** can receive a device identifier from the user's service provider **120**. Through the device identifier, the user's network access device **110** can be recognized and information associated with the network access device **110** analyzed.

[0030] Referring to **FIG. 2**, an alternative exemplary block diagram employing the present invention is shown. Environment **200** comprises multiple network access devices **110**, the communication network **130**, multiple content providers **140**, and a CR server **150**. One or more network access devices **110** are coupled to the access point **210**. The access point **210** may also be configured to be implemented over a variety of wireless networks, including wireless fidelity ("WiFi"), worldwide interoperability of microwave access ("WiMax"), or any mobile IP network. Although the network access devices **110** are depicted as coupling to the access point **210** wirelessly, one or more of the network access devices **110** may be coupled to the access point over a wire (e.g., Ethernet, USB, or firewire).

[0031] The access point **210** is a device that couples the network access devices **110** to the communication network **130**. In exemplary embodiments, the access point **210** may be a base station, router, hub, switch, or any combination. In one example, the access point **210** is a wireless router installed within a business (e.g., coffee shop) that allows users of the network access device **110** Internet access (e.g., a hotspot.)

[0032] Although in **FIG. 2**, the access point **210** is coupled directly to the communication network **130**, the access point **210** may be coupled to the communication network **130** through the service provider **120** (**FIG. 1**). In other embodiments, the access point **210** is, or is a part of, a service provider **120**. In one example, when the access point **210** is

installed, it negotiates an IP address from the service provider **120**. When the network access device **110** seeks network access, the network access device **110** provides the access point **210** a device identifier such as a MAC address. The access point **210** may be configured to authenticate the MAC address and assign an internal IP address to allow the network access device **110** access to the communication network **130** through the access point **210** over the service provider **120**.

[**0033**] In some embodiments, the access point **210** comprises hardware, software, or firmware configured to direct the device identifier as well as access information to the CR server **150**. In an example, a programmable access point **210** can be upgraded by updating the firmware or adding additional software configured to transmit the device identifier to the CR server **150**. In another example, the access point **210** may be purchased already configured. The access point **210** may also be configured to be controlled and updated remotely.

[**0034**] Access information can comprise any information associated with the network access device **110** sending the device identifier to the CR server **150**. In one example, access information identifies the access point **210** (such as an IP address or other identifier). The access information may also comprise an access point identifier (e.g., information that identifies the sending access point **210**, service provider **120**, or device sending the device identifier) information identifying the date and time the network access device **110** seeks access, a type of business that is operating the access point **210**, and/or the amount charged to the user of the network access device **110** for service. In other embodiments, a router between the access point **210** and the communication network **130** is configured to direct the device identifier and access information to the CR server **150**.

[**0035**] Once the user has obtained access to the communication network **130**, the user may use a web browser (e.g., Internet Explorer™) to access a content provider **140**. The content provider **140** is coupled to the communication network **130**. When a user uses the web browser to visit the content provider **140**, the user may see an advertisement. In one example, visitors to the CNN™ website typically see one or more advertisements. The advertisements are often provided by advertisement servers (not depicted.)

[**0036**] The CR server **150** is coupled to the communication network **130**. Although the CR server **150** is depicted as coupled to the communication network **130**, the CR server **150** may also be coupled to the access point **210**, a router, or service provider **120** between the network access device **110** and communication network **130**.

[**0037**] The CR server **150** is configured to receive the device identifier and the access information from the access point **210**. The device identifier and access information is then stored within a device record. The device record tracks the device identifier and access information. The device record may store any other kind of information associated with the device identifier as well.

[**0038**] In one example, a user may access the communication network **130** from two different access points **210** several times a week. Every time the user seeks network access, the connecting access point **210** sends the user's network access device's device identifier and access information to the CR server **150**. Each time the same device identifier is received by the CR server **150**, data including the number of times the communication network **130** has been accessed, the access point **210** used, date of access, time of access, location of the access point **210**, and associated goods and services of the access point may be stored within the device record. Each different device identifier may have a different device record. The device record may be stored within any data structure, table, or database.

[**0039**] The CR server **150** may generate user profiles based on the information contained within the device record. A user profile may be an individual profile of a user identifying one or more individual characteristics or one or more group characteristics of multiple users. In one example, the user may repeatedly access the communication network **130** with the same network access device **110** through the access point **210** at a coffee shop. As a result, the device record for the device identifier associated with the user may indicate that the user is often at a coffee shop. In this example, the individual characteristic of the user profile may indicate that the user prefers coffee or a particular coffee shop. In another example, an analysis of multiple device records determines that a group of users is identified as repeatedly accessing the communication network **130** within a particular city. The group characteristic may indicate that the users are either residents of the city or frequent visitors.

[**0040**] The CR server **150** may also be configured to generate a user preference based on the user profile. The user preference can be used to determine facts about the user as well as the user's potential preferences. In some embodiments, the user preference is the user profile. In other embodiments, the user preference comprises one or more tags to potentially preferred advertisements or other media. In still further embodiments, the user preference comprises the preferred advertisement or other media. The CR server **150** may provide the user preference to the content provider **140** or the advertisement server (not depicted.) The user preference may be encrypted.

[**0041**] Referring to **FIG. 3**, a block diagram of the CR server **150** according to one embodiment is shown. The CR server **150** comprises an information collection engine **300**, a profile engine **310**, a profile storage system **320**, and a communication network module (i.e., com. network module) **330** coupled to a bus **340**. The communication network module **330** is further coupled to a network link **350**.

[**0042**] The information collection engine **300** is configured to receive the device identifier, the access information, and any other information associated with the device identifier. The information collection engine **300** can be further configured to store the device identifier, the access information, and any other information associated with the device identifier within a device record. The device record can be stored within the profile storage system **320**.

[**0043**] In some embodiments, the information collection engine **300** is configured to analyze the access information or a device history to determine available information resources. The device history is the number of times the device identifier has been received by the CR server **150** as well as any associated information such as access information. Available information resources are web pages, data-

bases, tables, or any other accessible repository which the information collection engine **300** can access.

[**0044**] In one example, the information collection engine **300** determines that a particular device identifier has been received by the CR server **150** multiple times. The access information associated with each device identifier indicates that the access point **210** (**FIG. 2**) is within San Francisco, Calif. The information collection engine **300** may store the city and state within the device record. The information engine **300** may also retrieve relevant available information about San Francisco, Calif. (e.g., weather, local events, or types of available business close to access point **210**) and store the information within the device record.

[**0045**] The information collection engine **300** can also generate a user survey and provide the user survey to the access point **210** (**FIG. 2**). The user survey comprises questions that the user may answer. Survey responses may be collected, organized, and stored within the appropriate device record. The user survey is further discussed in **FIG. 5**.

[**0046**] The profile engine **310** is configured to retrieve one or more device records and generate user profiles. The user profile may comprise one or more device identifiers, current IP address associated with device identifiers, access information, device histories, or any other information associated with the network access devices **110** (**FIG. 2**) or device identifiers.

[**0047**] The profile engine **310** can generate user profiles comprising individual characteristics or group characteristics of the user of a network access device **110**. In an example, a user profile indicates that the user prefers Starbucks Coffee™ shops. The user profile can also comprise group characteristics of any number of users of different network access devices **110**. In an example, a user profile indicates a group of users of a particular gender that live in a specific city and enjoy baseball. Each user profile may identify users through current IP address, device identifier, or any other information compiled to provide assistance in identifying user preferences and/or habits.

[**0048**] The profile storage system **320** is a data structure that is configured to store and retrieve user profiles, user preferences, and device records. The profile storage system **320** can be any data structure, database, or table configured to store, retrieve, and/or organize information.

[**0049**] The communication network module **330** is an interface configured to provide communications to and from the CR server **150** to the network access device **110**, access point **210**, service provider **120**, communication network **130**, content provider **140**, advertisement server (not depicted) or any other CR server **150**. The communication network module **330** is coupled to the network link **350** and the bus **340**.

[**0050**] The network link **350** is a link from the CR server **150** to the network access device **110**, access point **210**, service provider **120**, communication network **130**, content provider **140**, advertisement server or any other CR server **150**. The bus is a link that allows the information collection engine **300**, the profile engine **310**, the profile storage system **320**, the communication network module **330**, and any other module to communicate.

[**0051**] In some embodiments, the CR server **150** comprises an optional authentication module. The optional authentication module may identify specific device identifiers or any other information contained within the device record. The optional authentication module may then assist the service provider **120** (**FIG. 1**) to confirm, verify, authenticate, and/or authorize the username, password, or other user identifier. In one example, a thief may attempt to receive network access by posing as another. Although the username and password stolen by the thief may be correct, the authentication module may determine that the device identifier of the thief's network access device **110** is not the device identifier associated with that user. The optional authentication module may then alert the service provider **120**.

[**0052**] The optional authentication module can also provide additional security to the content provider **140** and/or the service provider **120**. In an example, PayPal provides a PayPal unique address to the CR server **150** which is subsequently stored in a device record. When the user of a network access device **110** successfully completes a transaction over PayPal, the optional authentication module can confirm that each subsequent transaction is made by the same network access device **110** thereby allowing extra security to PayPal to avoid fraud. If a different network access device **110** is used to access a PayPal account, the optional authentication module can alert PayPal. As a result, PayPal may require additional passwords or security before allowing the user to make transactions. In some embodiments, content providers **140** such as PayPal forego passwords and rely on authentication of the network access device **110** through the optional authentication module of the CR server **150**. Although PayPal is discussed as an example, the optional authentication module can provide additional security to any transaction on a communication network **130** including, but not limited to, credit card transactions.

[**0053**] **FIG. 4** is a flowchart of an exemplary method for providing a user preference to develop customer relationships. In step **400**, the CR server **150** (**FIG. 2**) receives access information and the device identifier. In some embodiments, the access information is received from the access point **210** (**FIG. 2**). The CR server **150** may receive access information from any device that provides network access to the network access device **110** (**FIG. 1**)

[**0054**] In some embodiments, the device identifier is unique and identifies the network access device **110**. In an example, if the network access device **110** can receive an IP address, the device identifier may be the MAC address. In another example, the network access device **110** is a cellular telephone capable of accessing the communication network **130**. The device identifier of a cellular telephone may be an IMSI identity.

[**0055**] In other embodiments, the device identifier identifies a category of network access devices **110**. The category can identify a specific type of digital device or a general class. In an example, the network access device **110** may be a Sony PSP™ capable of accessing the communication network **130**. In this case, the device identifier may identify the network access device **110** as a Sony PSP™. Alternately, the device identifier may identify the network access device **110** as a gaming device.

[**0056**] In step **405**, the CR server **150** stores the access information and the device identifier within a device record.

In some embodiments, if the device identifier has not previously been received by the CR server **150**, the CR server **150** creates a device record associated with the device identifier. The device record can further store current and past IP addresses, the device history, and any other information that may be associated with the device identifier and/or the access information.

[**0057**] In step **410**, the CR server **150** generates a user profile based on the access information and the device identifier. The user profile may also be based on the device history or other information associated with the device identifier. In some embodiments, user profiles are identified by recognizing general trends within the digital records. In an example, a high number of users may be male within a certain range of ages and seek network access within a specific football stadium. A user profile may be generated for males within an age range that prefer football. Other user profiles may be generated including a user profile for males who prefer sports or a user profile that associates users within an age range and sports.

[**0058**] In another embodiment, predetermined user profiles may be generated. In an example, a soft drink company may wish to direct advertisements to a certain demographic at certain times of day in the summer. A user profile can be generated that identifies device identifiers and current IP addresses with users who fit the demographic. Access information may indicate the time of day they are accessing the communication network **130** and the location of the access point **210** including city and state. Further, the CR server **150** may check the weather of the city and state from resources available on the Internet to include those users in hot climates and temperatures to be included within the user profile.

[**0059**] In step **415**, the CR server **150** provides the user preference associated with the user profile. The user preference can assist third parties to identify, develop, and maintain relationships with the user without tracking cookies or requiring separate user accounts. The user preference can be transmitted to an advertisement server or a content provider **140**.

[**0060**] The user profiles can be used to determine the potential preferences of the users. As such, the user preference may comprise a user profile or parts of the user profile. In some embodiments, the user preference may be an advertisement tag. In an example, the CR server **150** may receive an index of advertisements and associated advertisement information (e.g., brands associated with the advertisements.) A device record may refer to a user currently accessing a content provider **140**. Instead of placing a random advertisement on the content provider **140** for the user to see, the advertisement server may direct a request for an advertisement tag with the user's IP address to the CR server **150**. The CR server **150** can then check the user profiles for the user using the user's IP address. If the user is within a user profile or a user profile can be generated from a device record, then the CR server **150** will use the user profile to select an advertisement from the index of advertisements that satisfy the requirements of the advertisement server and fit the user profile. The advertisement tag (i.e., user preference) can then be sent to the advertisement server which, in turn, can provide the proper advertisement to the content provider **140**. In other embodiments, the user preference may be the advertisement.

[**0061**] **FIG. 5** is a flowchart of another exemplary method for providing a user preference. In step **500**, the CR server **150** (**FIG. 2**) receives access information and the device identifier from an access point **210**. The access information and the device identifier are stored within the device record in step **505**. In one example, the CR server **150** retrieves the device record associated with the device identifier. If no device record associated with the device identifier is found, then a device record is created. Once the device record is found or is created, the access information and device identifier are stored.

[**0062**] In step **510**, the CR server **150** retrieves the device record associated with the device identifier. In some embodiments, step **510** is optional if the device record was previously retrieved in step **505**.

[**0063**] In step **515**, a user survey is generated based on the retrieved device record. The user survey may be different for each user depending on the information contained within the device record. In an example, the user survey contains one or more questions designed to gather information regarding the user associated with a particular device identifier. Each time the user of the network access device **110** (**FIG. 2**) with the device identifier requests network access, another user survey may be generated with one or more different questions designed to better identify the user's interests and preferences. In some embodiments, user surveys are no longer generated after the user has answered a predetermined number of survey questions. In a different example, each user may receive the same user survey or each user may receive a different user survey each time they request network services. There may be any number of questions within each survey. The questions may range from personal facts (e.g., age, gender), preferences (e.g., cola, clothes), or even topical information such as awareness of local events.

[**0064**] In optional step **520**, the CR server **150** generates a user agreement based on the access information. The user agreement may comprise terms and conditions that the user must agree to before obtaining network access or receiving the benefits of user preference and user profile generation. In some embodiments, the user agreement can be different for different access points **210** identified by the access information. The user agreements may be stored or generated for different access points **210** as needed.

[**0065**] In step **525**, the CR server **150** provides the user survey and the optional user agreement. In one embodiment, the user survey and optional user agreement are resident on the CR server **150** and will be sent to the access point **210** upon request. In another embodiment, the user survey and optional user agreement are transmitted to the access point **210**.

[**0066**] Upon retrieving or receiving the user survey and the optional user agreement from the CR server **150**, the access point **210** provides the user survey and the optional user agreement to the network access device **110** requesting network access. In some embodiments, the access point **210** or an associated web server transmits a web page to the network access device **110**. The web page may be a home page or a "splash" page that requires the user to view the page and optionally to agree to specific terms and conditions required for network access. The user survey and the optional user agreement may be displayed to the user on the web page.

[0067] The user may respond to the user survey, the terms and conditions of the web page, and the optional user agreement. In one example, the user enters answers to the user survey, agrees to the terms and conditions of the web page as well as the optional user agreement. These responses are then transmitted to the access point **210** which redirects the survey response and the optional agreement response to the CR server **150**. If the user does not agree to the terms and conditions of the web page or the optional user agreement, then the method of **FIG. 5** ends.

[0068] In step **530**, the CR server **150** receives the survey response and the optional agreement response. The responses may be stored within the appropriate device record associated with the user's device identifier. If the optional agreement response indicates that the user does not agree, then the method of **FIG. 5** ends.

[0069] In step **535**, the user profile is generated based on access information, the device identifier, and the survey responses. The user profile may also be based on any other information contained within the device record including device history or other information related to the access information (e.g., location of access point, weather at location, and current local events.)

[0070] Although **FIG. 5** discusses an interaction with an access point **210**, the interaction may be with any network device capable of providing network access to a network access device **110** (**FIG. 2**). Some examples include, but are not limited to, routers, switches, or service providers **120**.

[0071] Referring to **FIG. 6**, a flowchart of an exemplary method for an access point **210** (**FIG. 2**) is shown. In step **600**, the access point **210** receives the device identifier and the request for network service from the network access device **110** (**FIG. 2**). In one example, a user wishes to obtain network access over the user's network access device **110** at hotspot within a local coffee house. When the user activates the network access device **110** and executes a web browser, the network access device **110** sends a device identifier with a request for network access to the access point **210**. In this example, the device identifier is a MAC address.

[0072] In step **605**, the access point **210** transmits the device identifier and the access information received from the network access device **110** to the CR server **150**. In some embodiments, software resident on the access point **210** automatically sends the device identifier of any network access device **110** seeking network access. The access information may comprise the IP address of the sending access point **210**.

[0073] The CR server **150** can receive and store the device identifier and access information from the access point **210**. The CR server **150** can generate a user survey based on the device identifier. In step **610**, the access point **210** receives the survey from the CR server **150**. In some embodiments, the CR server **150** transmits the user survey to the access point **210** without a survey request from the access point **210**. In other embodiments, the access point **210** transmits a user survey request to the CR server **150** or pulls the user survey from the CR server **150**.

[0074] In step **615**, the access point **210** transmits the user survey and a network agreement to the network access device **110**. In some embodiments, the access point **210** or a related web server transmits the user survey and network agreement to the network access device **110** on a web page. The user of the network access device **110** may see the page through the web browser prior to receiving network access. The user may then answer one or more user survey questions and send the survey response to the access point **210** in step **620**.

[0075] In step **625**, the access point **210** transmits the survey response received from the network access device **110** to the CR server **150**. In addition to the survey response, the access point **210** may also send access information to the CR server **150**. The CR server **150** can receive and store the survey response and/or access information within a device record.

[0076] In step **630**, the access point determines if the user of the network access device **110** agrees to the network agreement. In some embodiments, the user is asked to click on a button within the web page that includes the network agreement. If the user agrees to the network agreement, the access point **210** can then provide network service or network access in step **635**. If the user does not agree to the network agreement, the method of **FIG. 6** ends.

[0077] **FIG. 7** is a block diagram of a digital device **700** according to one embodiment of the exemplary embodiment. The digital device **700** includes a system bus **770** coupled to a processor **710**, memory **720**, storage system **730**, input/output (I/O) interface **740**, communications (com.) network interface **750**, and display interface **760**. The communications network interface **750** is further coupled to an external communications link **780**. The I/O interface **740** and the display interface **760** can be optional. The network access device **110** (**FIG. 2**), CR server **150** (**FIG. 2**), the access point **210** (**FIG. 2**), and the service provider **120** (**FIG. 1**) may be digital devices **700**.

[0078] The processor **710** is configured to execute software or instructions. The memory **720** is any memory device configured to hold data, either permanently or temporarily, to make the data available to any components connected to the system bus **770**. The memory **720** may comprise battery-backed random access memory or read-only memory (ROM).

[0079] The storage system **730** is any storage device or group of storage devices configured to store data permanently or temporarily. In one embodiment, the storage system **730** implements a Read/Verify-after-Write (RVAW) policy where data is verified after being stored within the storage system **730**. Further, the storage system **730** may comprise a storage device configured to receive and read external media. In some embodiments, the user profiles, user preferences, and/or device records are stored within the storage system **730**. The storage system **730** and/or the memory **720** may comprise a machine readable medium.

[0080] The I/O interface **740** is any interface or device configured to provide input or output to the player of the digital device **700**. For example, the I/O interface **740** may comprise a video interface, audio interface, a remote control, a keypad, joystick, touch-screen, track-pad, or buttons.

[0081] The communications network interface **750** is any communication interface configured to transfer data between any components connected to the system bus **770** and any network over the external communications link **780**.

The external communications link **780** couples the digital device **700** to any communications network **130** (**FIG. 2**).

[**0082**] Embodiments of the present invention have been described above with reference to exemplary embodiments. It will be apparent to those skilled in the art that various modifications may be made and other embodiments can be used without departing from the broader scope of the invention. Therefore, these and other variations upon the exemplary embodiments are intended to be covered by the present invention.

What is claimed is:

1. A method for providing a user preference, comprising:

receiving access information and a device identifier associated with a request for network service from an access point;

storing the access information and the device identifier within a device record;

generating a user profile based at least in part on the device identifier and the access information within the device record; and

providing a user preference associated with the user profile.

2. The method of claim 1 further comprising:

providing a user survey associated with the device identifier;

receiving a survey response associated with the user survey; and

storing the survey response within the device record.

3. The method of claim 2 wherein the user profile is further based on the survey response.

4. The method of claim 1 further comprising providing a user agreement.

5. The method of claim 1 further comprising:

generating a web page with a user agreement to receive network service; and

transmitting the web page to a network access device.

6. The method of claim 1 wherein the access information comprises an access point identifier.

7. The method of claim 1 wherein the device identifier comprises a media access control address.

8. The method of claim 1 wherein the device identifier comprises an international mobile station identity.

9. The method of claim 1 wherein the device record is stored within a database.

10. The method of claim 1 wherein the user profile identifies at least one individual characteristic of a user.

11. The method of claim 1 wherein the user profile identifies a group of users as sharing at least one group characteristic.

12. The method of claim 1 wherein the user preference is encrypted.

13. A system for providing a user profile, comprising:

a profile engine configured to receive access information and a device identifier associated with a request for network service from an access point, store the access information and the device identifier within a device record, generate a user profile based at least in part on the device identifier and the access information within the device record, and provide a user preference associated with the user profile.

14. The system of claim 13 wherein the profile engine is further configured to provide a user survey associated with the device identifier; receive survey response associated with the user survey, and store the survey response within the device record.

15. The system of claim 14 wherein the user profile is further based on the survey response.

16. The system of claim 13 further comprising providing a user agreement.

17. The system of claim 13 wherein the user profile engine is further configured to generate a web page with a user agreement to receive the network service and transmit the web page to a potential network service user.

18. The system of claim 13 wherein the access information comprises an access point identifier.

19. The system of claim 13 wherein the device identifier comprises a media access control address.

20. The system of claim 13 wherein the device identifier comprises an international mobile station identity.

21. The system of claim 13 wherein the device record is stored within a database.

22. The system of claim 13 wherein the user profile identifies at least one individual characteristics of a user.

23. The system of claim 13 wherein the user profile identifies a group of users as sharing at least one group characteristic.

24. The system of claim 13 wherein the user preference is encrypted.

25. A machine-readable medium having embodied thereon a program, the program being executable by a machine and configured to receive access information and a device identifier associated with a request for network service from an access point, store the access information and the device identifier within a device record, generate a user profile based at least in part on the device identifier and the access information within the device record, and provide a user preference associated with the user profile.

26. The program of claim 25 wherein the profile engine is further configured to provide a user survey associated with the device identifier, receive a survey response associated with the user survey from, and store the survey response within the device record.

27. The program of claim 26 wherein the user profile is further based on the survey response.

28. The program of claim 25 wherein the user preference is encrypted.

* * * * *