US 20080235590A1

(19) United States

(12) Patent Application Publication

Krantz et al.

(10) Pub. No.: US 2008/0235590 A1

(43) Pub. Date: Sep. 25, 2008

(54) SYSTEM AND METHOD OF ACCESSING A MULTIMEDIA TIMELINE

(75) Inventors: **David Krantz**, San Antonio, TX (US); **Aradhana Goel**, Chicago, IL (US); **Joseph Graceffa**, Chicago, IL (US); **Mark Jones**, Evanston, IL (US); **Iain Roberts**, Chicago, IL (US); **April Starr**, Chicago, IL (US); **Thomas Keil Stat**, Northbrook, IL (US)

Correspondence Address:
TOLER LAW GROUP
8500 BLUFFSTONE COVE, SUITE A201
AUSTIN, TX 78759 (US)

(73) Assignee: **AT&T Knowledge Ventures, LP**, Reno, NV (US)

(21) Appl. No.: **11/725,999**

(22) Filed: **Mar. 20, 2007**

Publication Classification

(51) **Int. Cl.**
G06F 3/00 (2006.01)

(52) **U.S. Cl.** **715/730**

(57) **ABSTRACT**

Systems, computer readable media, and methods of accessing a multimedia timeline are disclosed. Multimedia timeline data may be received at a multimedia device. The multimedia timeline data may correspond to at least a portion of a multimedia timeline. The multimedia timeline may correspond to a life event. A graphical user interface may be provided to a display device. The graphical user interface may include at least the portion of the multimedia timeline in a timeline format.

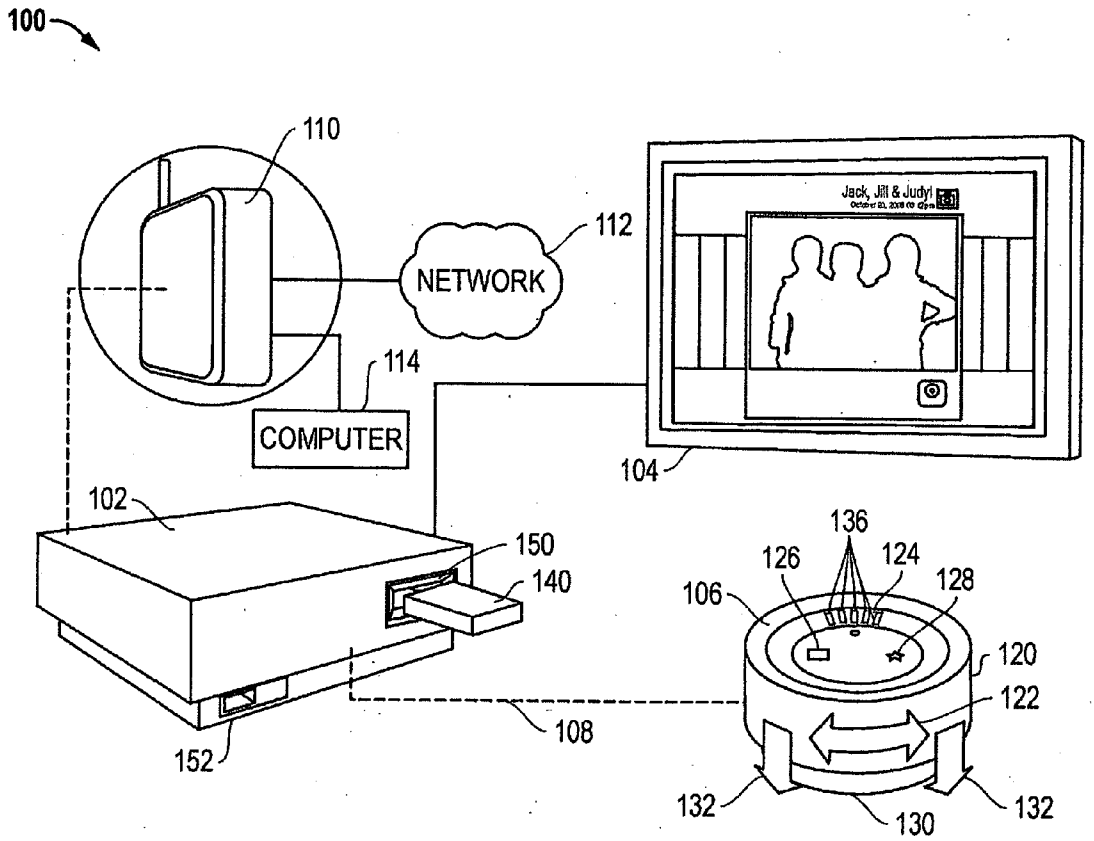

FreeWheel, Ex. 1077
FreeWheel v. AlmondNet
IPR2024-00422

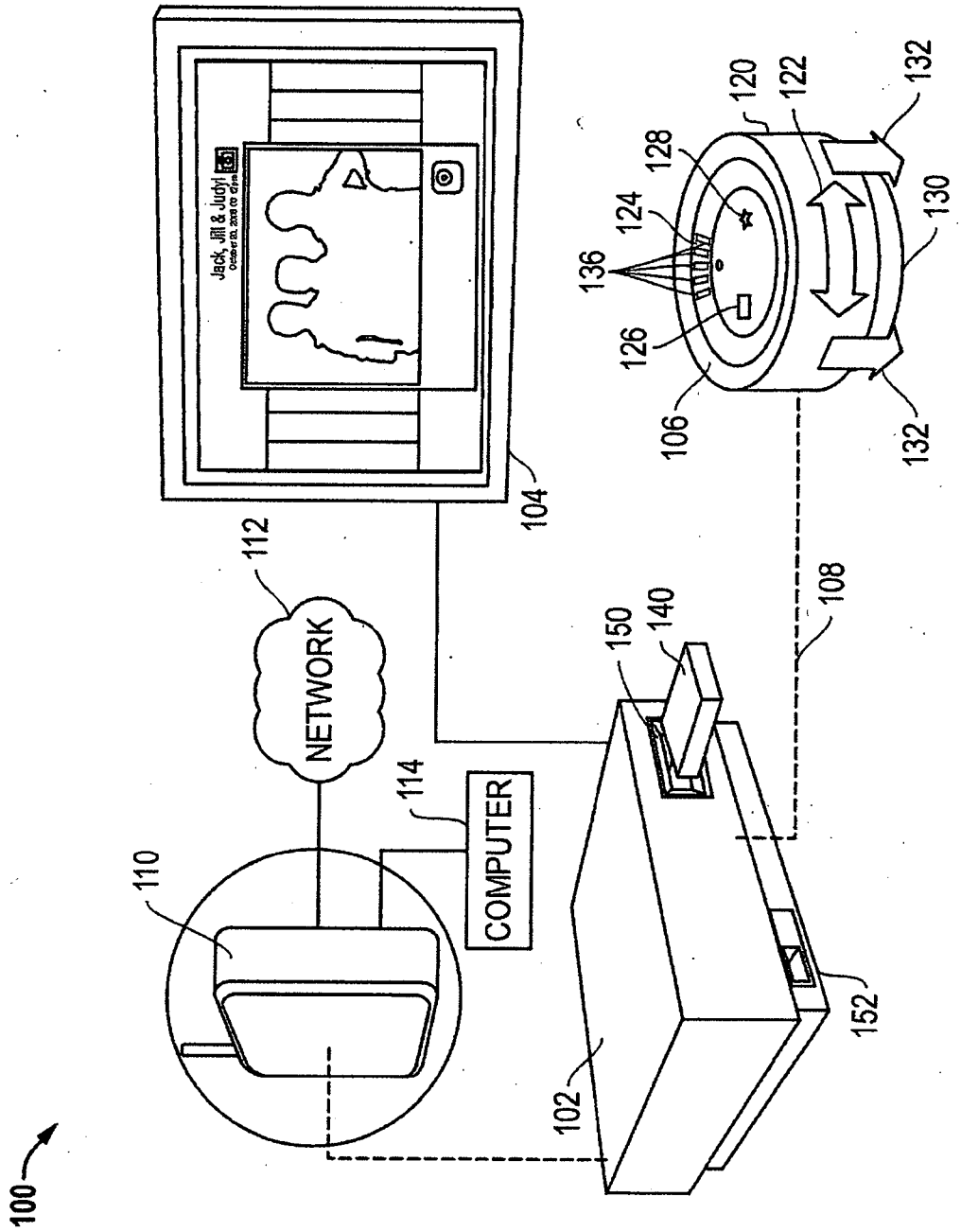
100
110
NETWORK
112
114
COMPUTER
104
Jack, Jill & Judy!
102
150
140
152
108
106
126
136
124
128
120
122
130
132
132

FIG. 1

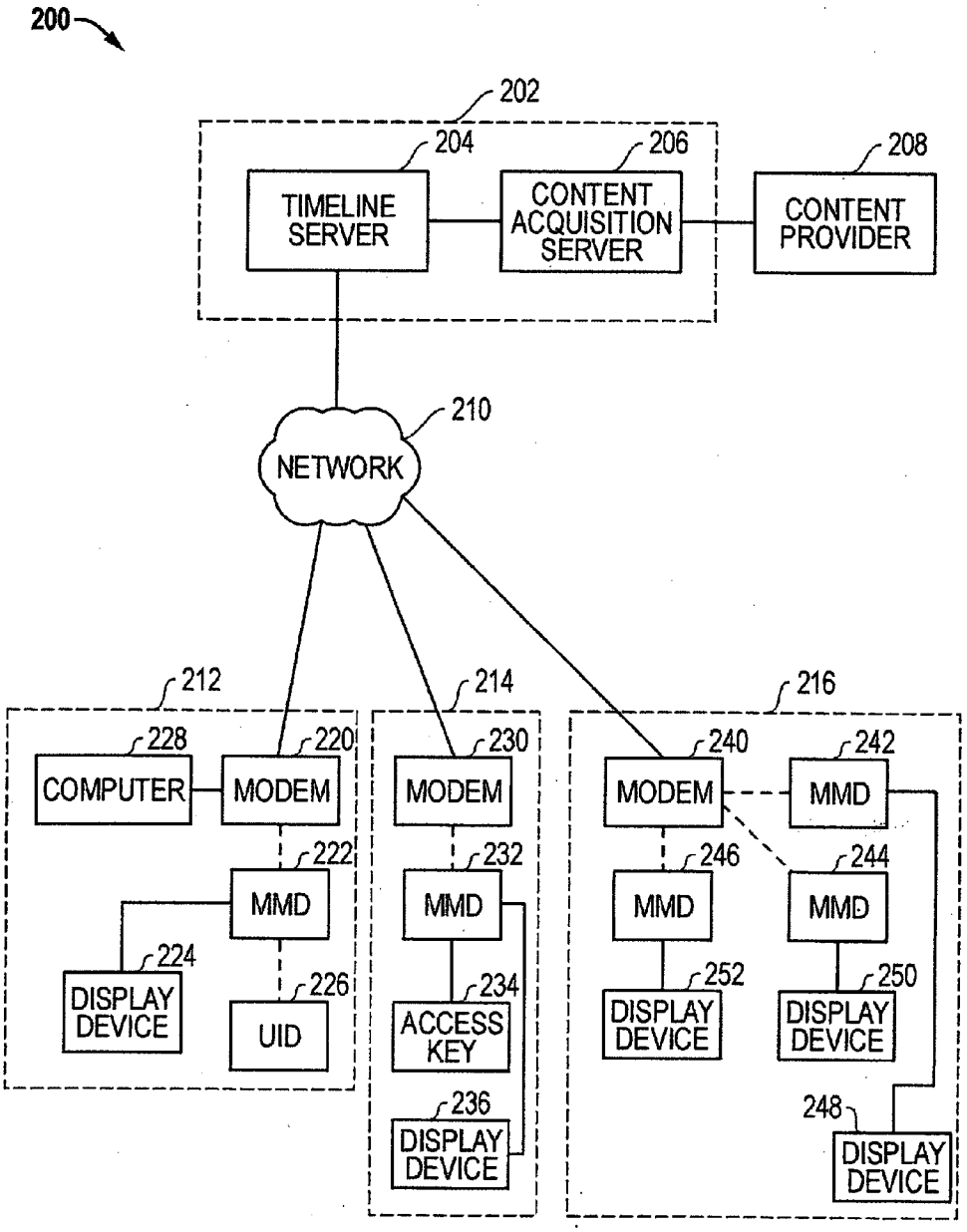
200
202
204
TIMELINE SERVER
206
CONTENT ACQUISITION SERVER
208
CONTENT PROVIDER
210
NETWORK
212
228
COMPUTER
220
MODEM
222
MMD
224
DISPLAY DEVICE
226
UID
214
230
MODEM
232
MMD
234
ACCESS KEY
236
DISPLAY DEVICE
216
240
MODEM
242
MMD
246
MMD
244
MMD
252
DISPLAY DEVICE
250
DISPLAY DEVICE
248
DISPLAY DEVICE

FIG. 2

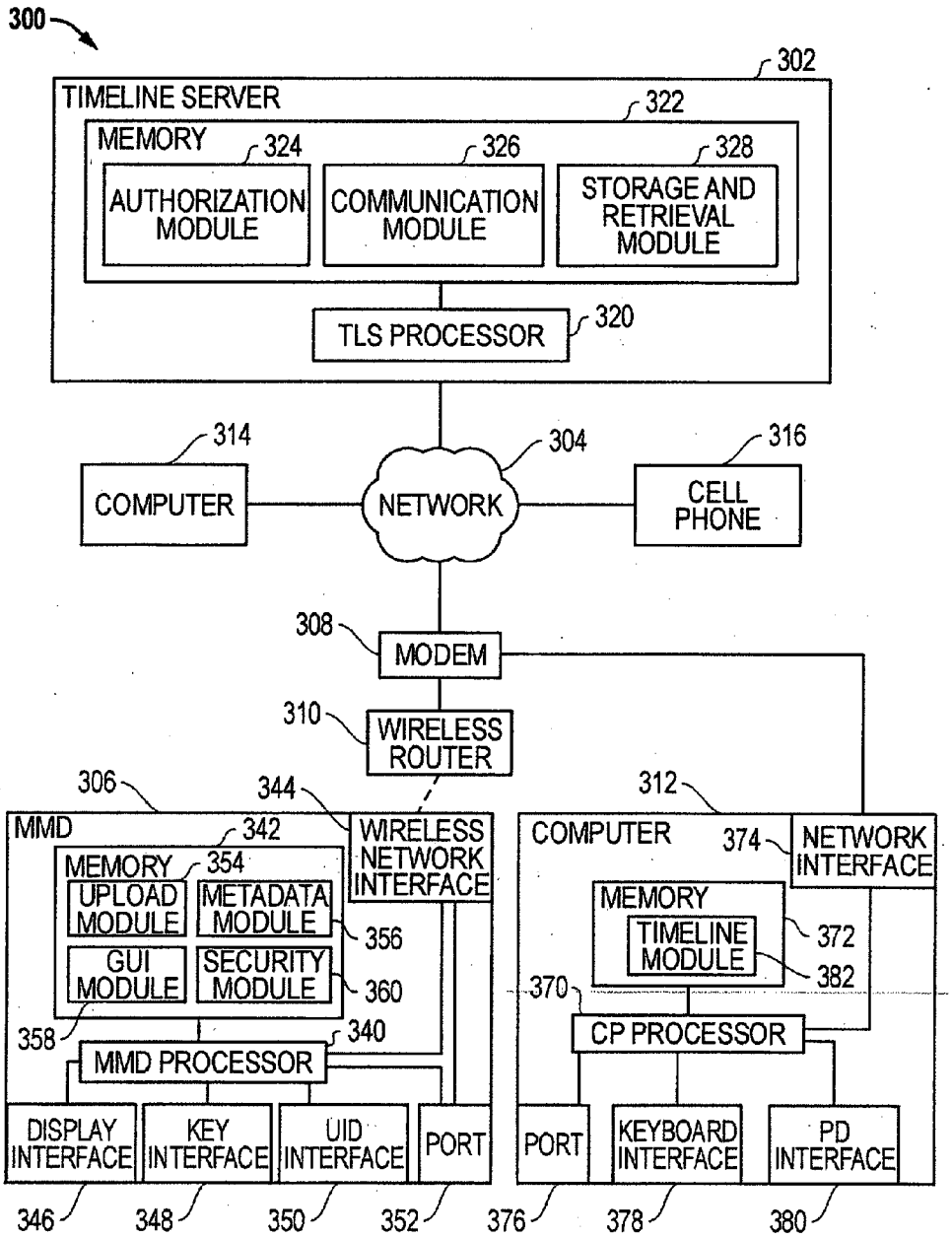
300
302
TIMELINE SERVER
322
MEMORY
324
326
328
AUTHORIZATION MODULE
COMMUNICATION MODULE
STORAGE AND RETRIEVAL MODULE
TLS PROCESSOR
320
314
304
316
COMPUTER
NETWORK
CELL PHONE
308
MODEM
310
WIRELESS ROUTER
306
344
312
MMD
342
WIRELESS NETWORK INTERFACE
COMPUTER
374
NETWORK INTERFACE
MEMORY
354
UPLOAD MODULE
METADATA MODULE
356
GUI MODULE
SECURITY MODULE
360
MEMORY
TIMELINE MODULE
372
382
370
358
340
MMD PROCESSOR
CP PROCESSOR
DISPLAY INTERFACE
KEY INTERFACE
UID INTERFACE
PORT
PORT
KEYBOARD INTERFACE
PD INTERFACE
346
348
350
352
376
378
380

FIG. 3

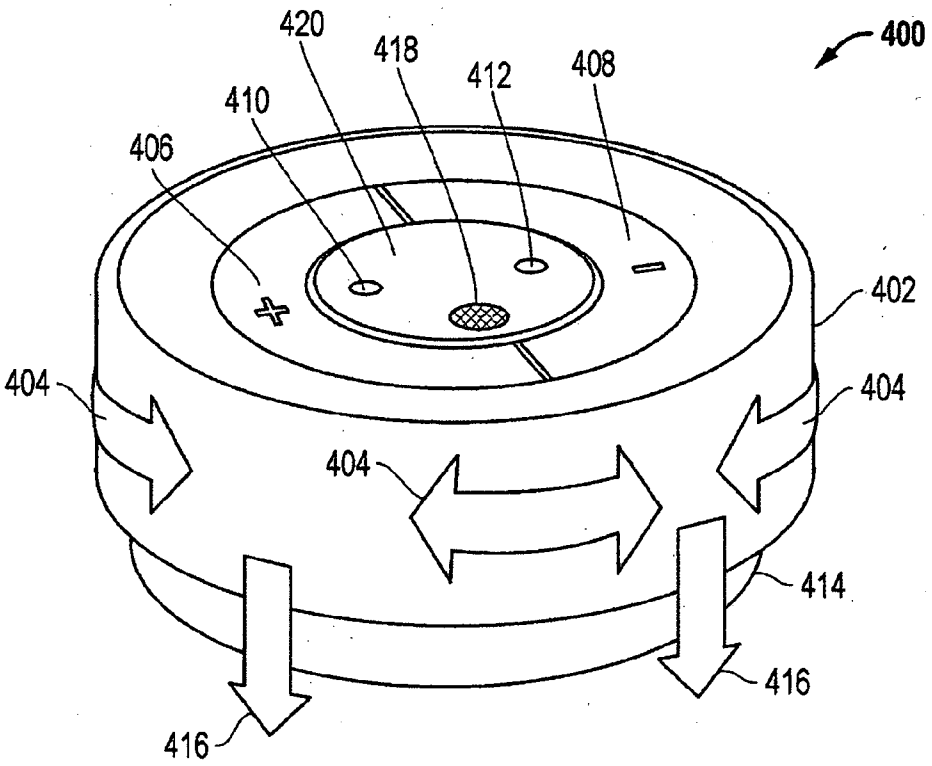

FIG. 4

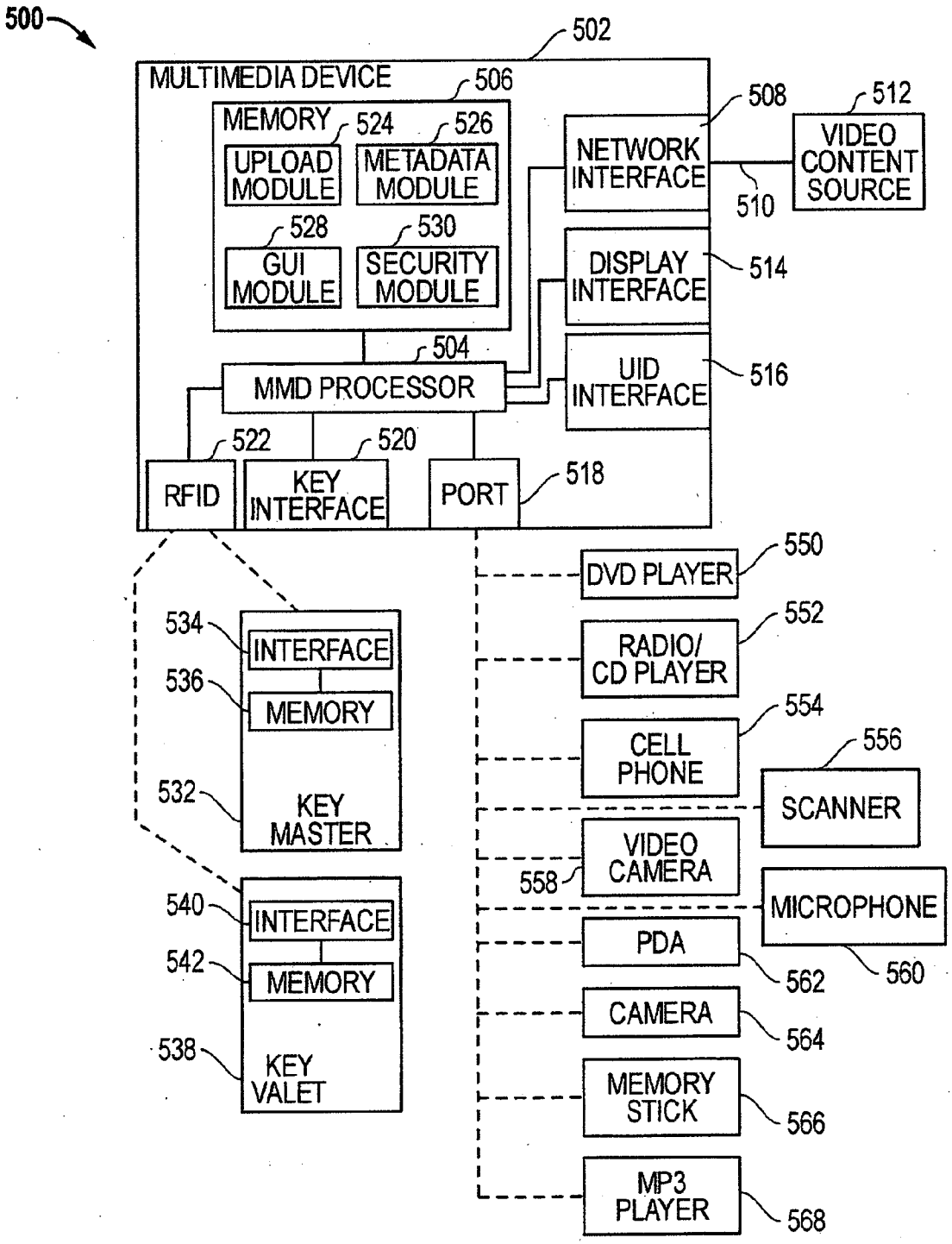
500
502
MULTIMEDIA DEVICE
506
MEMORY
524
526
UPLOAD MODULE
METADATA MODULE
528
530
GUI MODULE
SECURITY MODULE
508
512
NETWORK INTERFACE
VIDEO CONTENT SOURCE
510
DISPLAY INTERFACE
514
504
MMD PROCESSOR
UID INTERFACE
516
522
520
RFID
KEY INTERFACE
PORT
518
DVD PLAYER
550
534
INTERFACE
536
MEMORY
532
KEY MASTER
RADIO/ CD PLAYER
552
CELL PHONE
554
556
SCANNER
VIDEO CAMERA
558
MICROPHONE
540
INTERFACE
542
MEMORY
538
KEY VALET
PDA
562
560
CAMERA
564
MEMORY STICK
566
MP3 PLAYER
568

FIG. 5

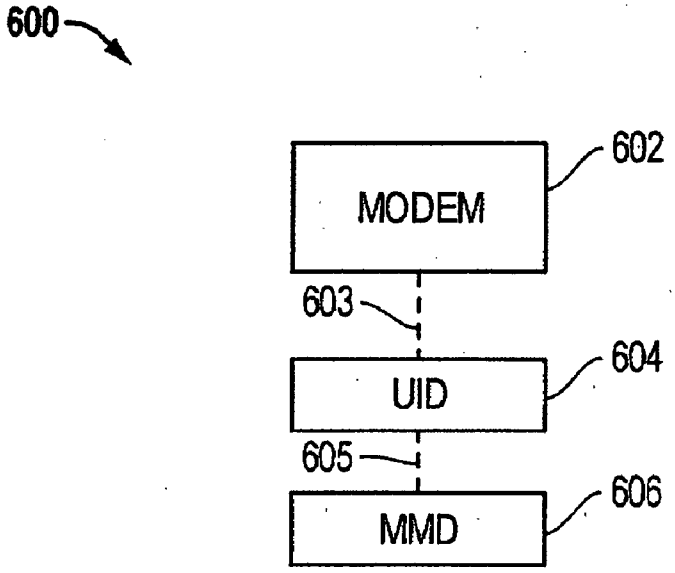
600
MODEM
602
603
UID
604
605
MMD
606

FIG. 6

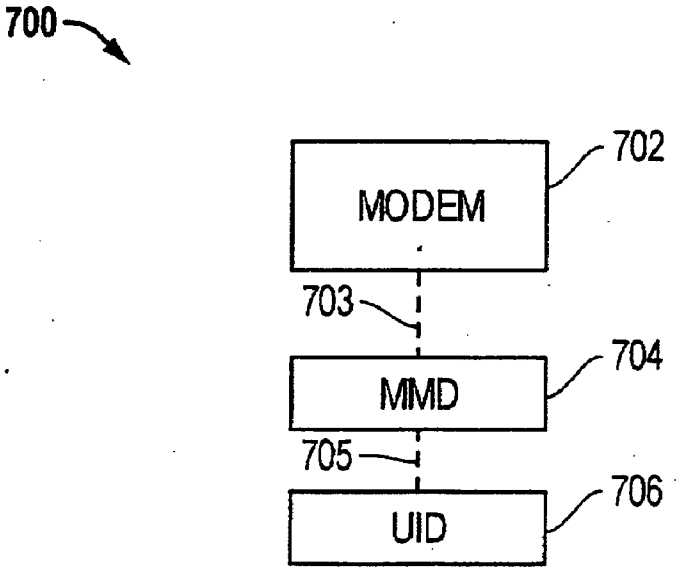
700
MODEM
702
703
MMD
704
705
UID
706

FIG. 7

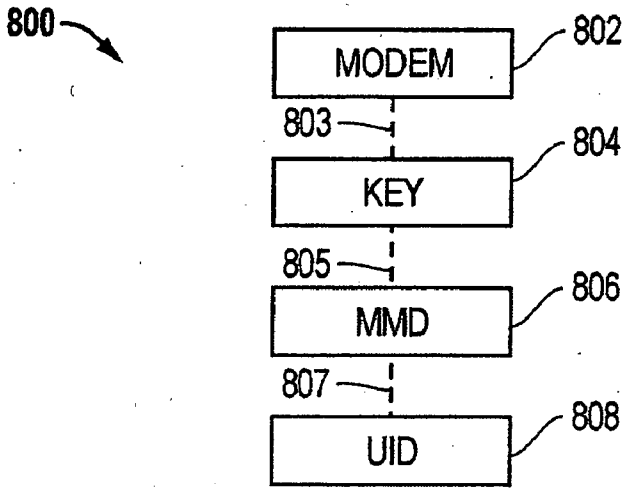
800
MODEM
802
803
KEY
804
805
MMD
806
807
UID
808

FIG. 8

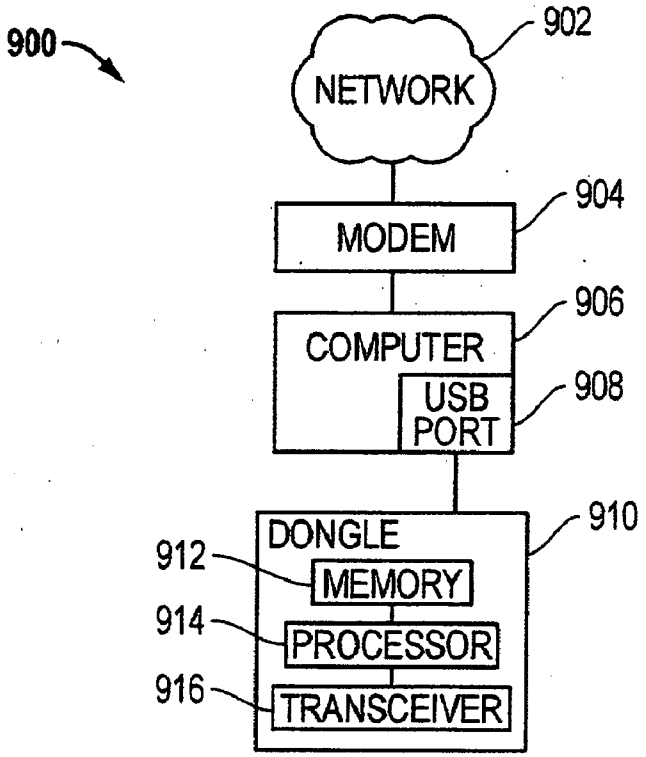
900
NETWORK
902
MODEM
904
COMPUTER
906
USB PORT
908
DONGLE
910
912
MEMORY
914
PROCESSOR
916
TRANSCEIVER

FIG. 9

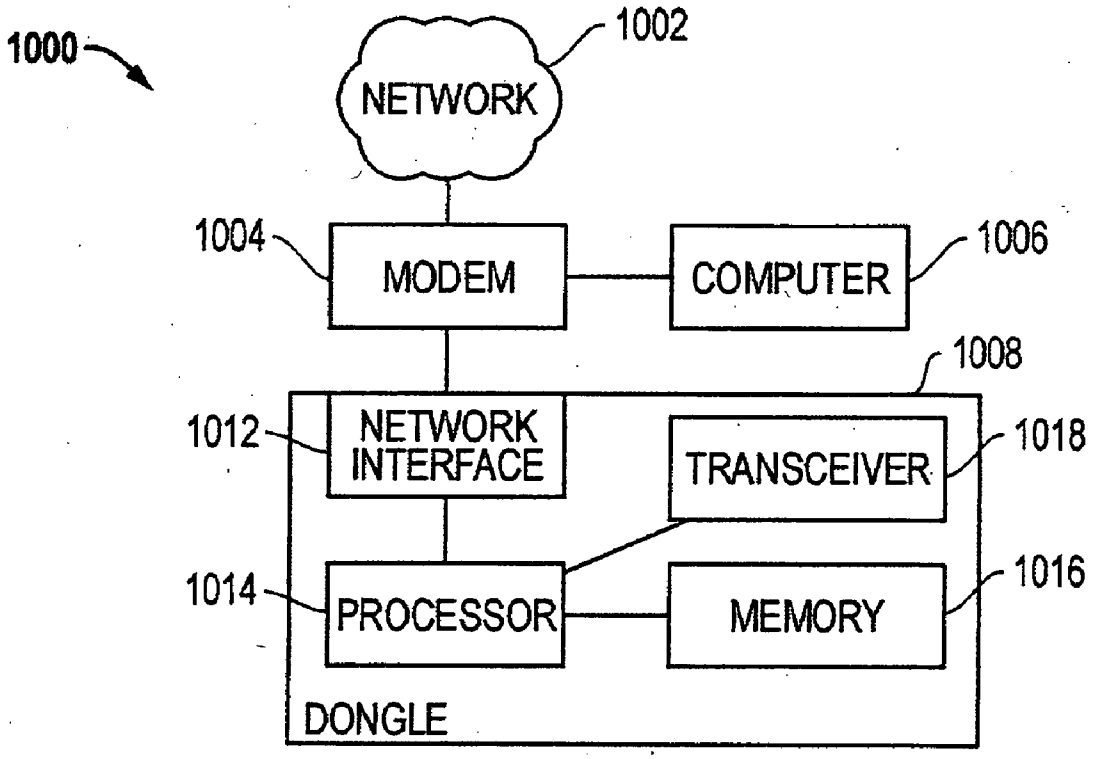
1000
1002
NETWORK
1004
MODEM
COMPUTER
1006
1008
1012
NETWORK INTERFACE
TRANSCEIVER
1018
1014
PROCESSOR
MEMORY
1016
DONGLE

FIG. 10

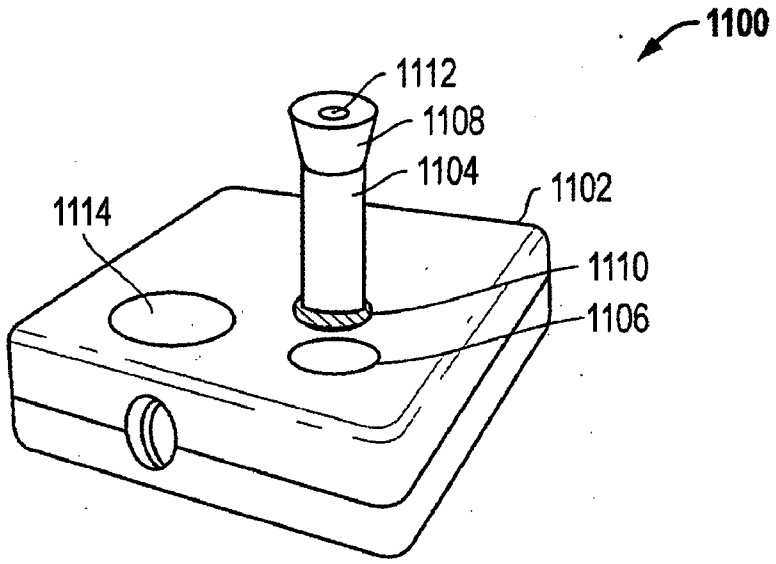
1100
1112
1108
1104
1102
1114
1110
1106

FIG. 11

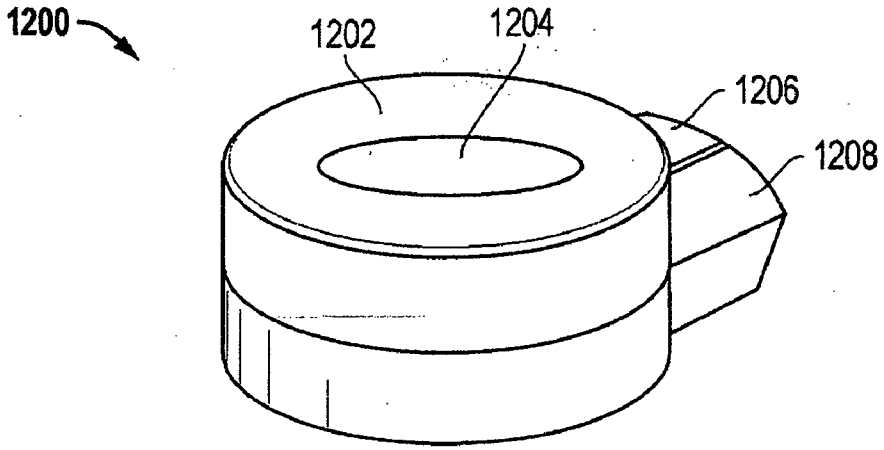
1200
1202
1204
1206
1208

FIG. 12

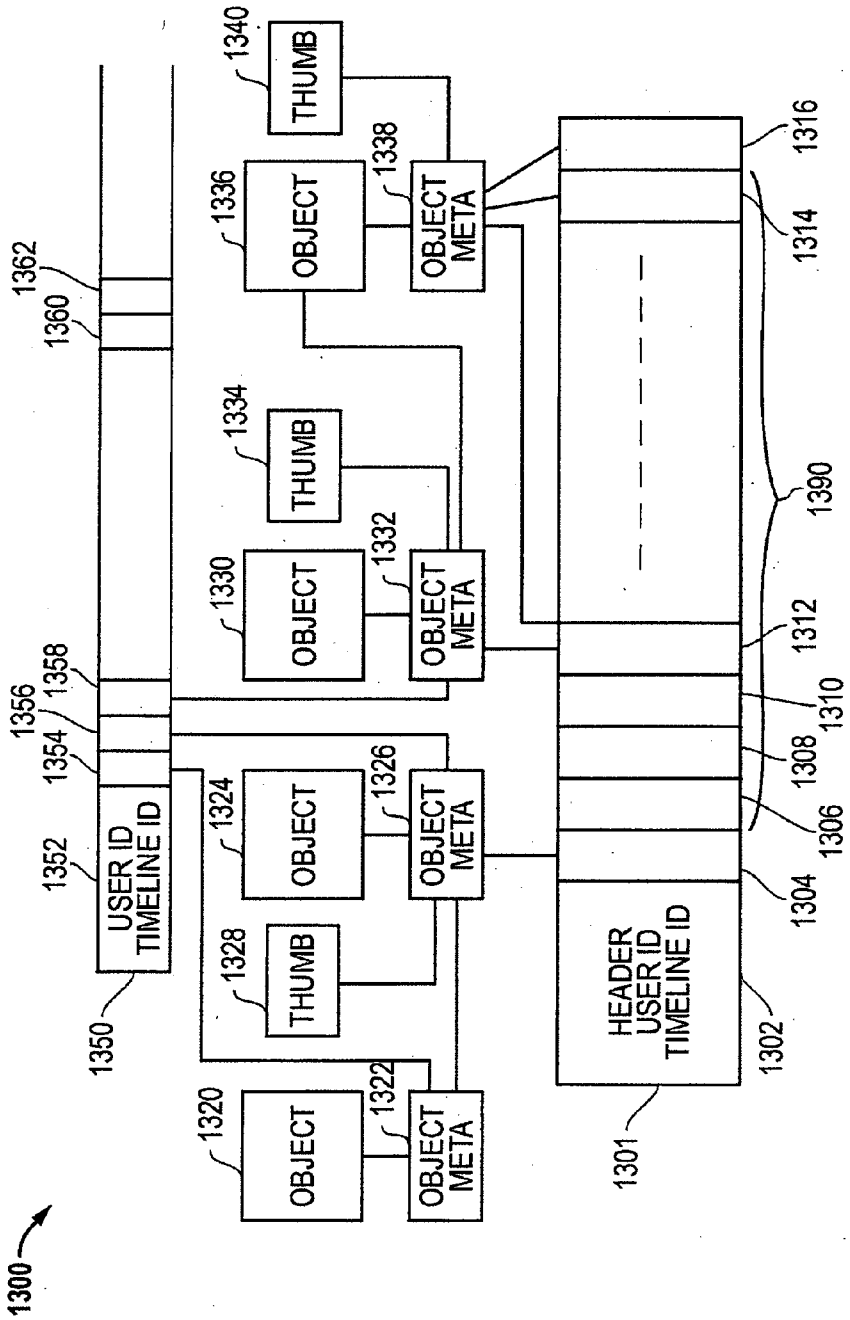
1300
1350
USER ID
TIMELINE ID
1352
1354
1356
1358
1360
1362
1320
OBJECT
1322
OBJECT
META
1328
THUMB
1324
OBJECT
1326
OBJECT
META
1330
OBJECT
1332
OBJECT
META
1334
THUMB
1336
OBJECT
1338
OBJECT
META
1340
THUMB
1301
HEADER
USER ID
TIMELINE ID
1302
1304
1306
1308
1310
1312
1314
1316
1390

FIG. 13

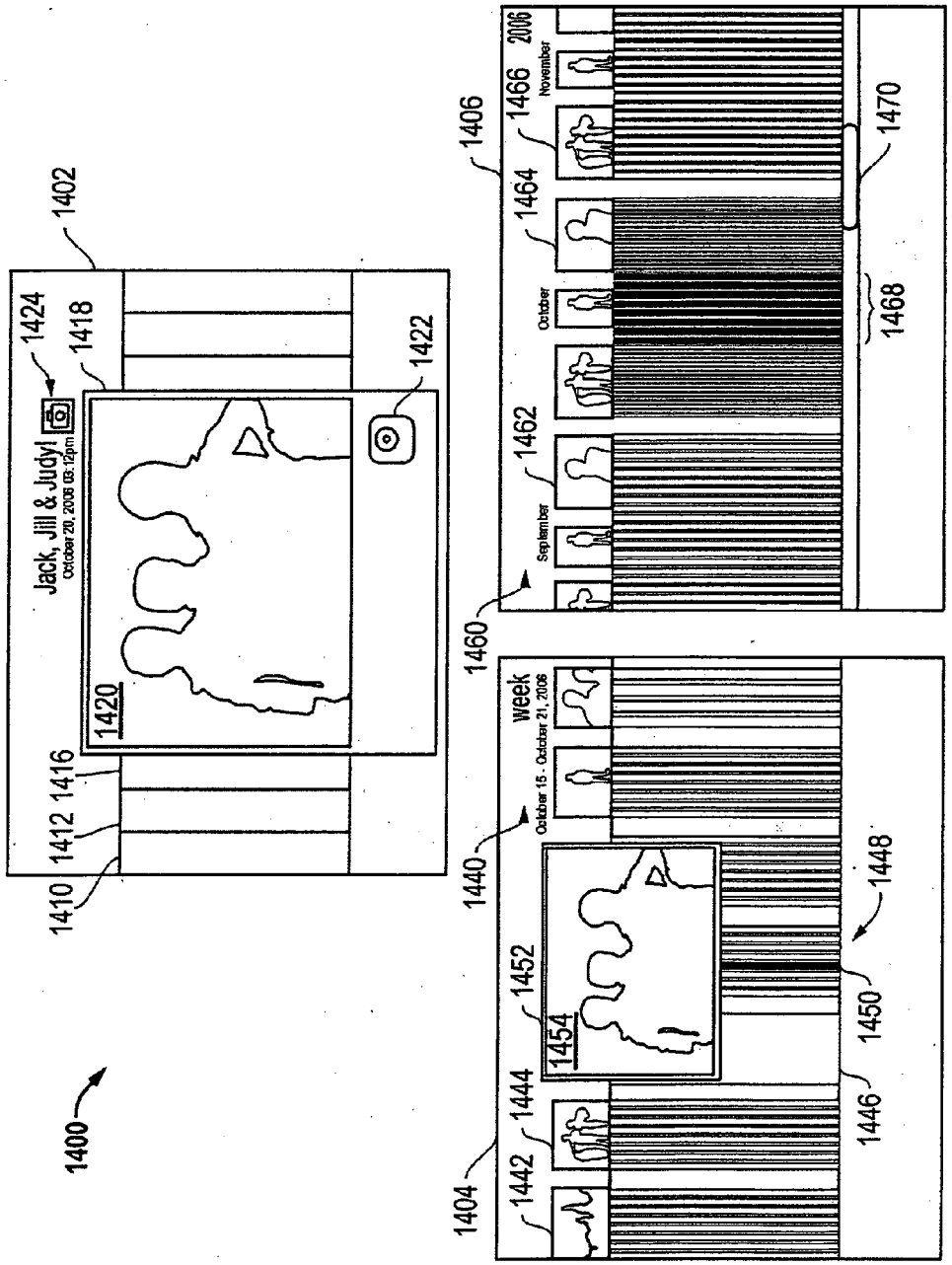
1400
1402
1404
1406
1410
1412
1416
1418
1420
1422
1424
Jack, Jill & Judy!
October 20, 2008 03:12pm
1440
week
October 15 - October 21, 2008
1442
1444
1446
1448
1450
1452
1454
1460
September
1462
October
1464
November
1466
2006
1468
1470

FIG. 14

FIG. 15

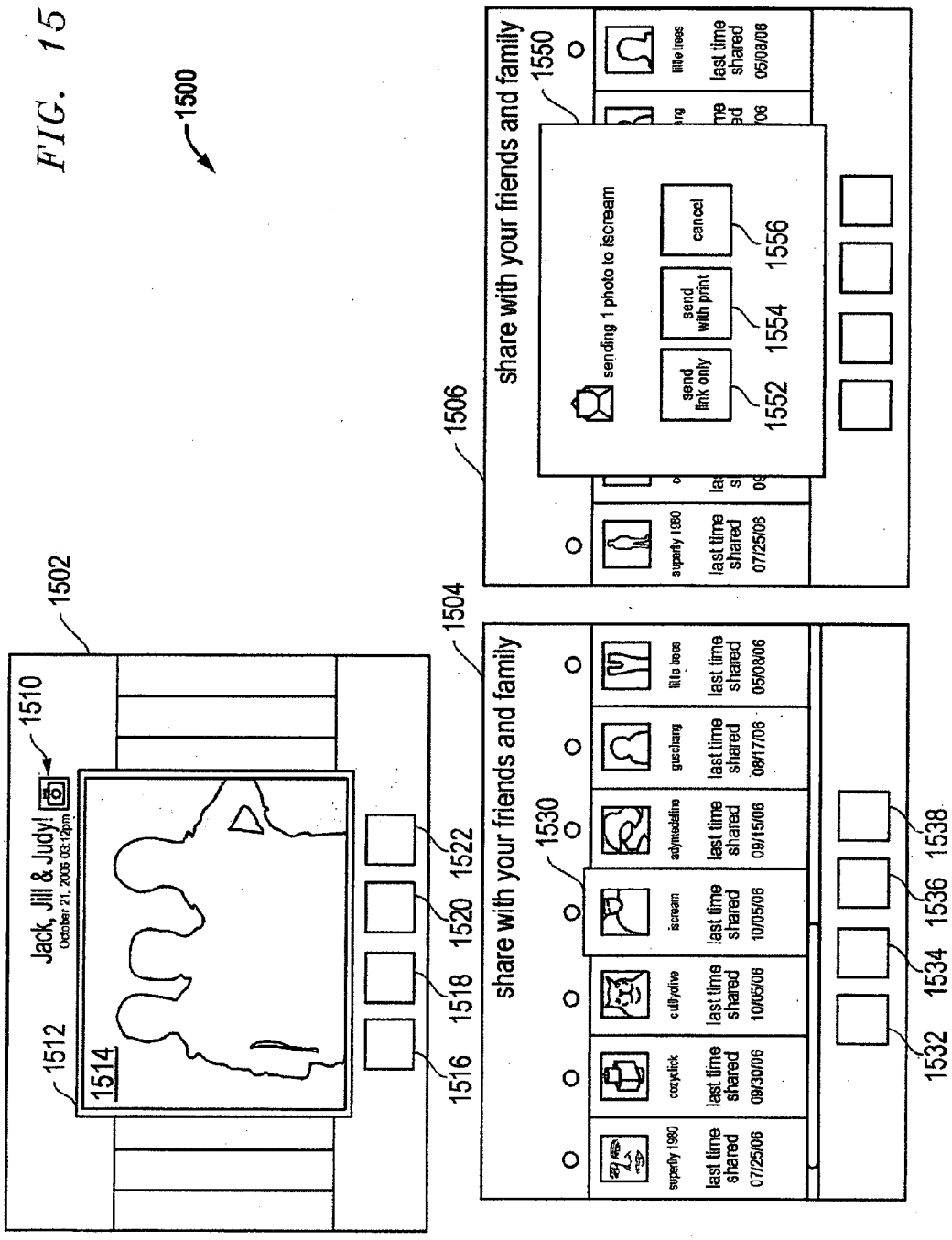
1500
1502
1504
1506
1510
1512
1514
1516
1518
1520
1522
1530
1532
1534
1536
1538
1550
1552
1554
1556
Jack, Jill & Judy!
October 21, 2006 03:12pm
share with your friends and family
superfly 1980
last time shared 07/25/06
cozyclick
last time shared 09/30/06
cultlydive
last time shared 10/05/06
iscream
last time shared 10/05/06
adymedeline
last time shared 09/15/06
guschang
last time shared 08/17/06
little trees
last time shared 05/08/06
sending 1 photo to iscream
send link only
send with print
cancel

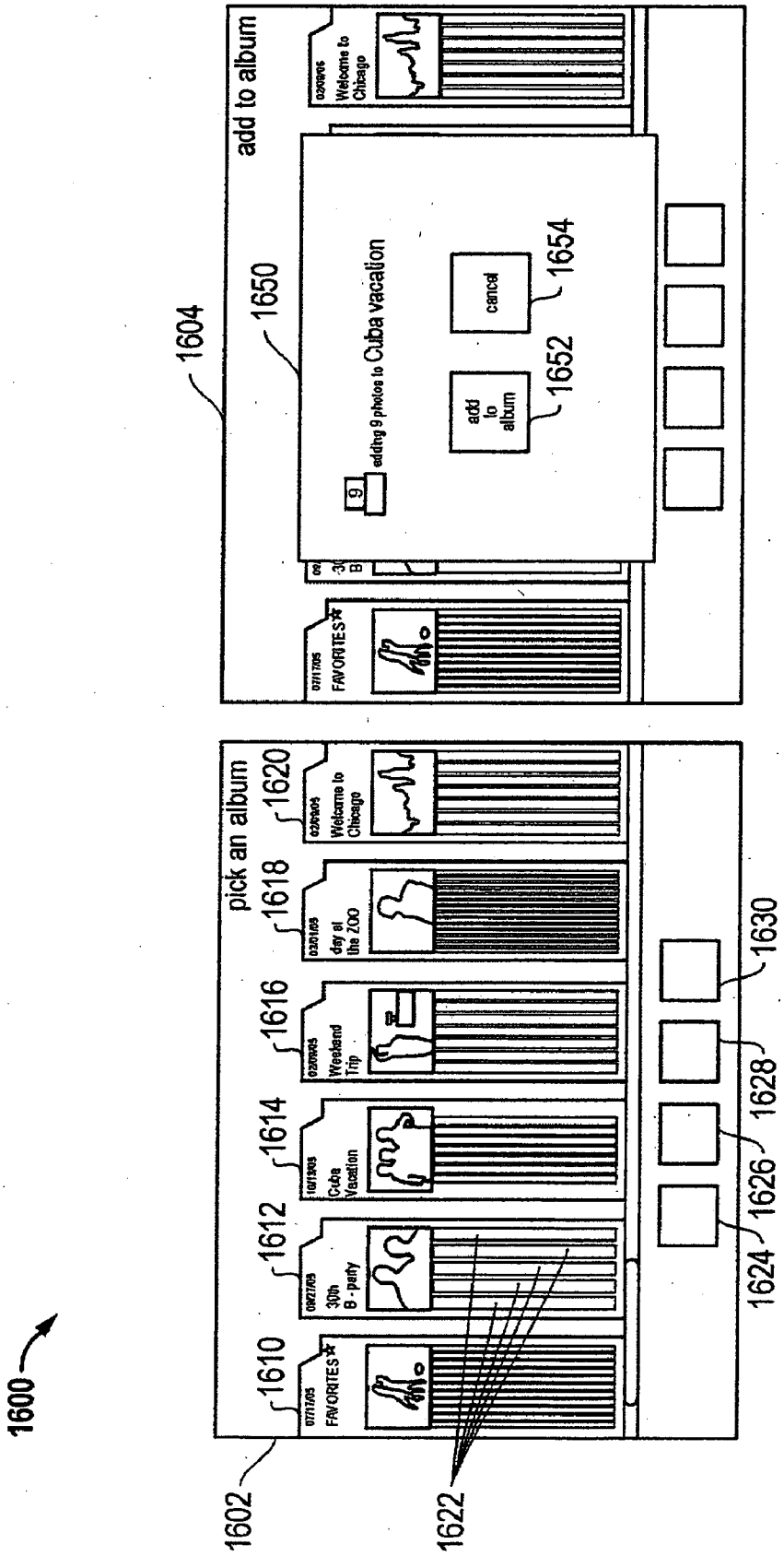
1600
1602
1604
1610
1612
1614
1616
1618
1620
1622
1624
1626
1628
1630
1650
1652
1654
pick an album
add to album
FAVORITES
30th B - party
Cuba Vacation
Weekend Trip
day at the ZOO
Welcome to Chicago
editing 9 photos to Cuba vacation
add to album
cancel

FIG. 16

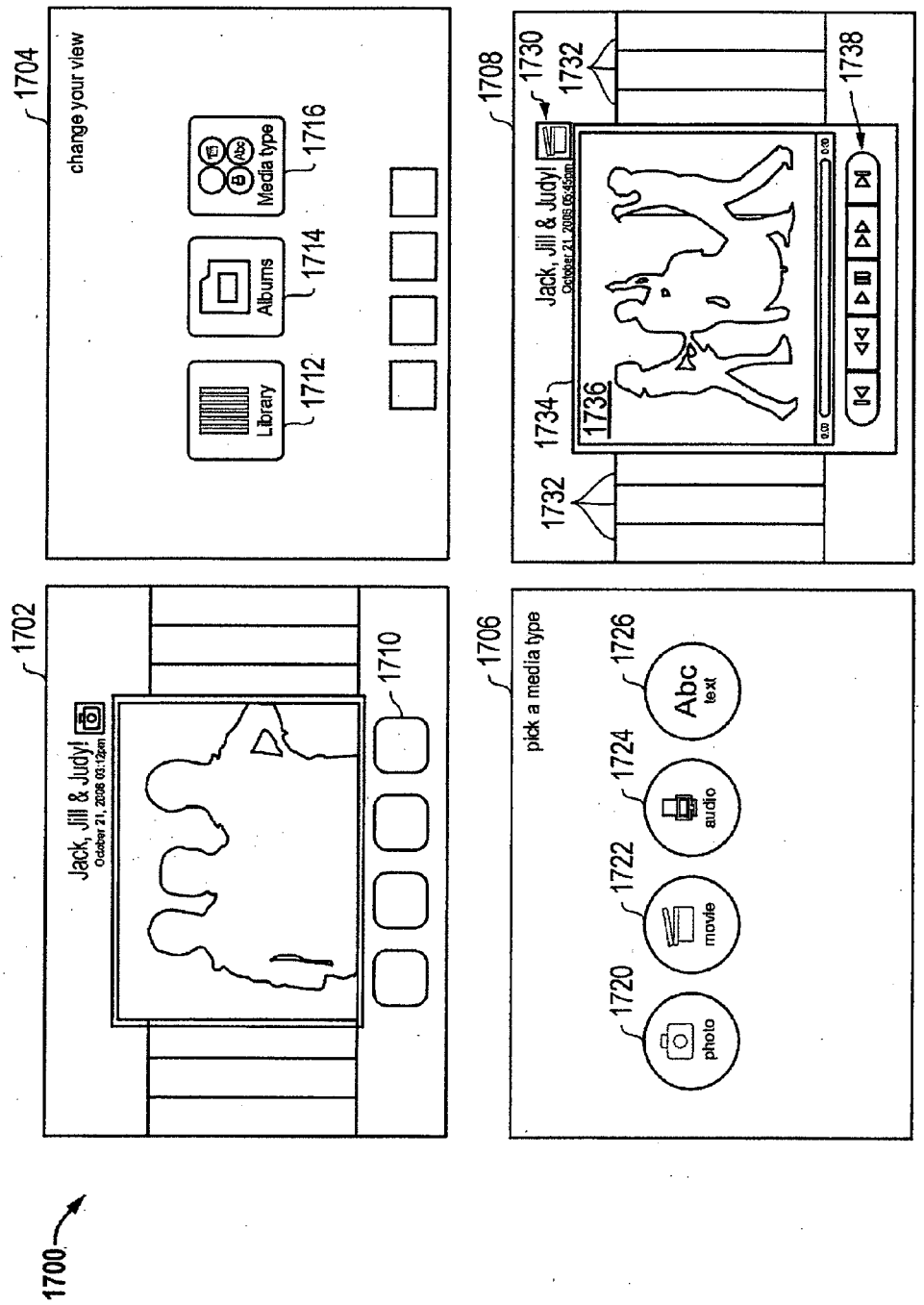
1700
1702
Jack, Jill & Judy!
October 21, 2006 03:12pm
1710
1704
change your view
Library
1712
Albums
1714
Media type
1716
1706
pick a media type
photo
1720
movie
1722
audio
1724
Abc
text
1726
1708
Jack, Jill & Judy!
October 21, 2006 05:45pm
1730
1732
1734
1736
1738

FIG. 17

FIG. 18

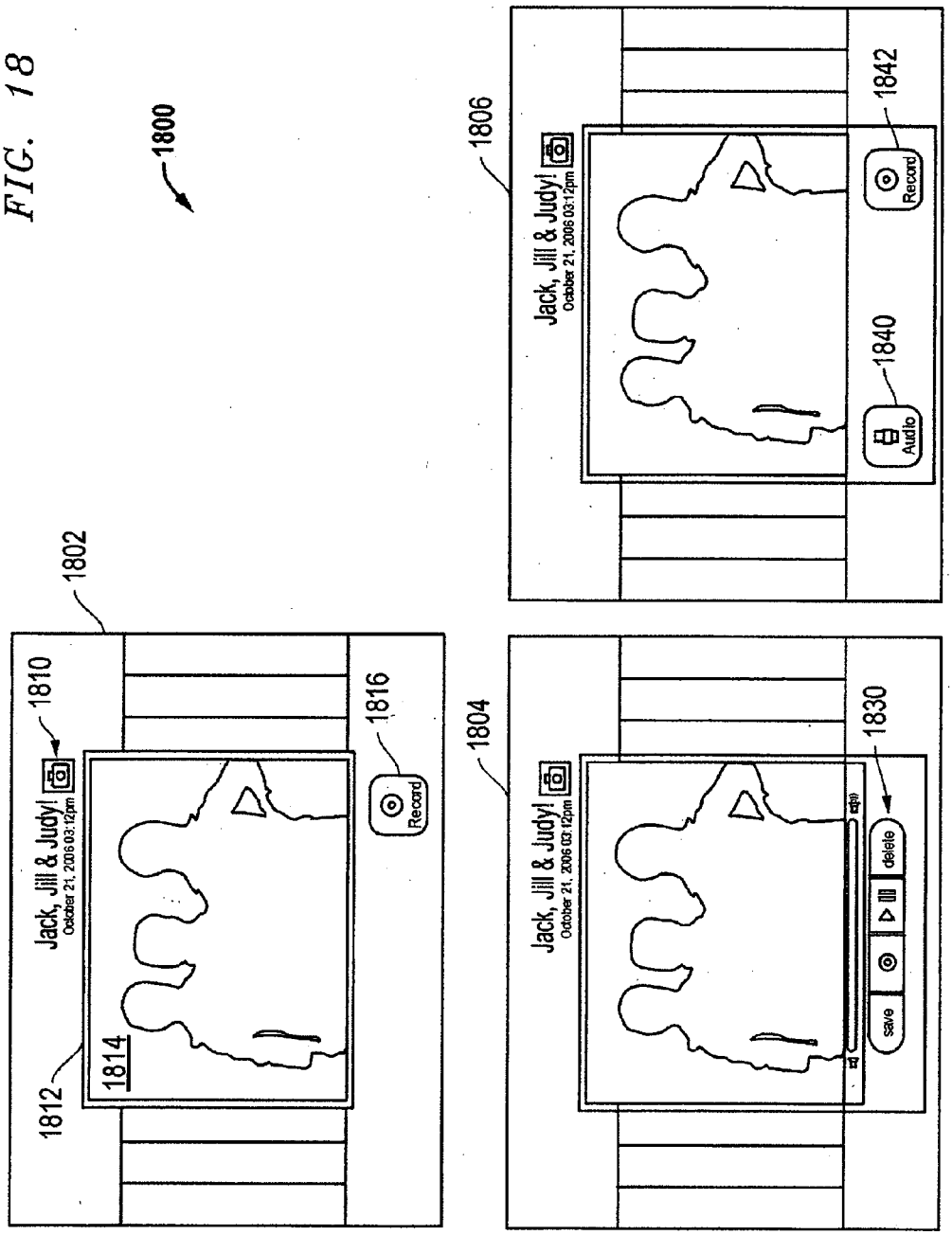
1800
1802
1804
1806
1810
1812
1814
1816
1830
1840
1842
Jack, Jill & Judy!
October 21, 2006 03:12pm
Record
Audio
save
delete

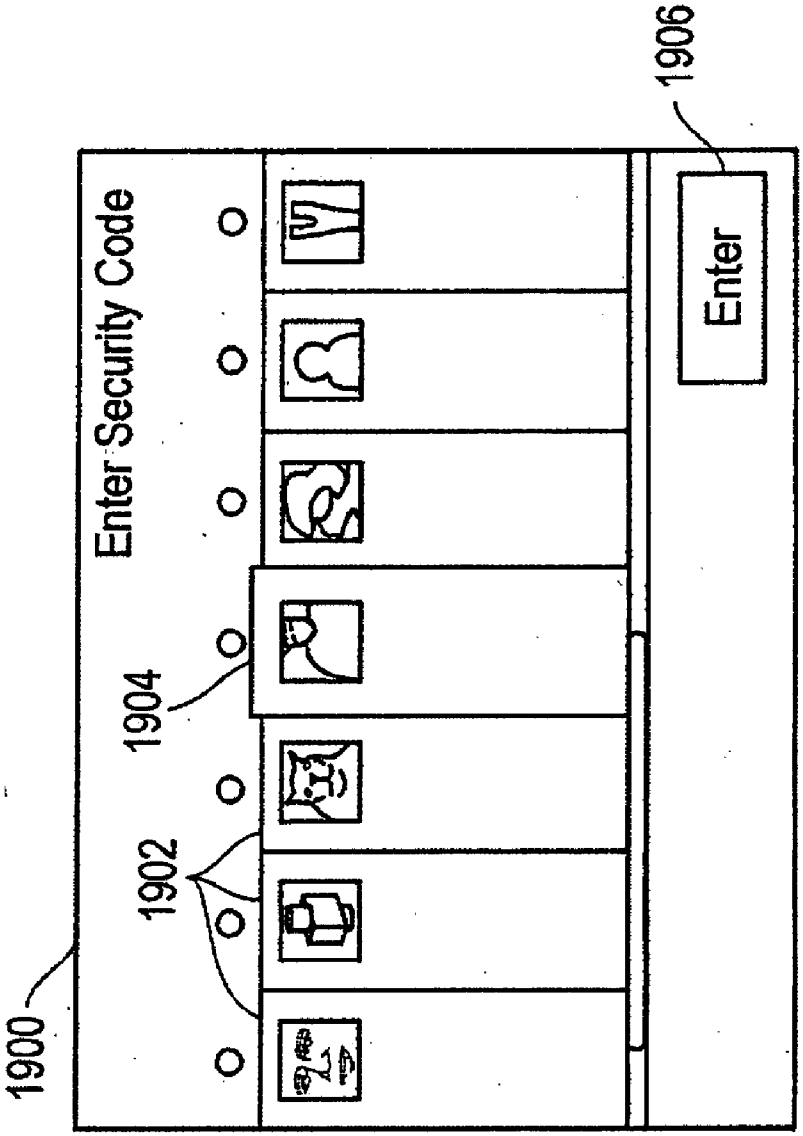

FIG. 19

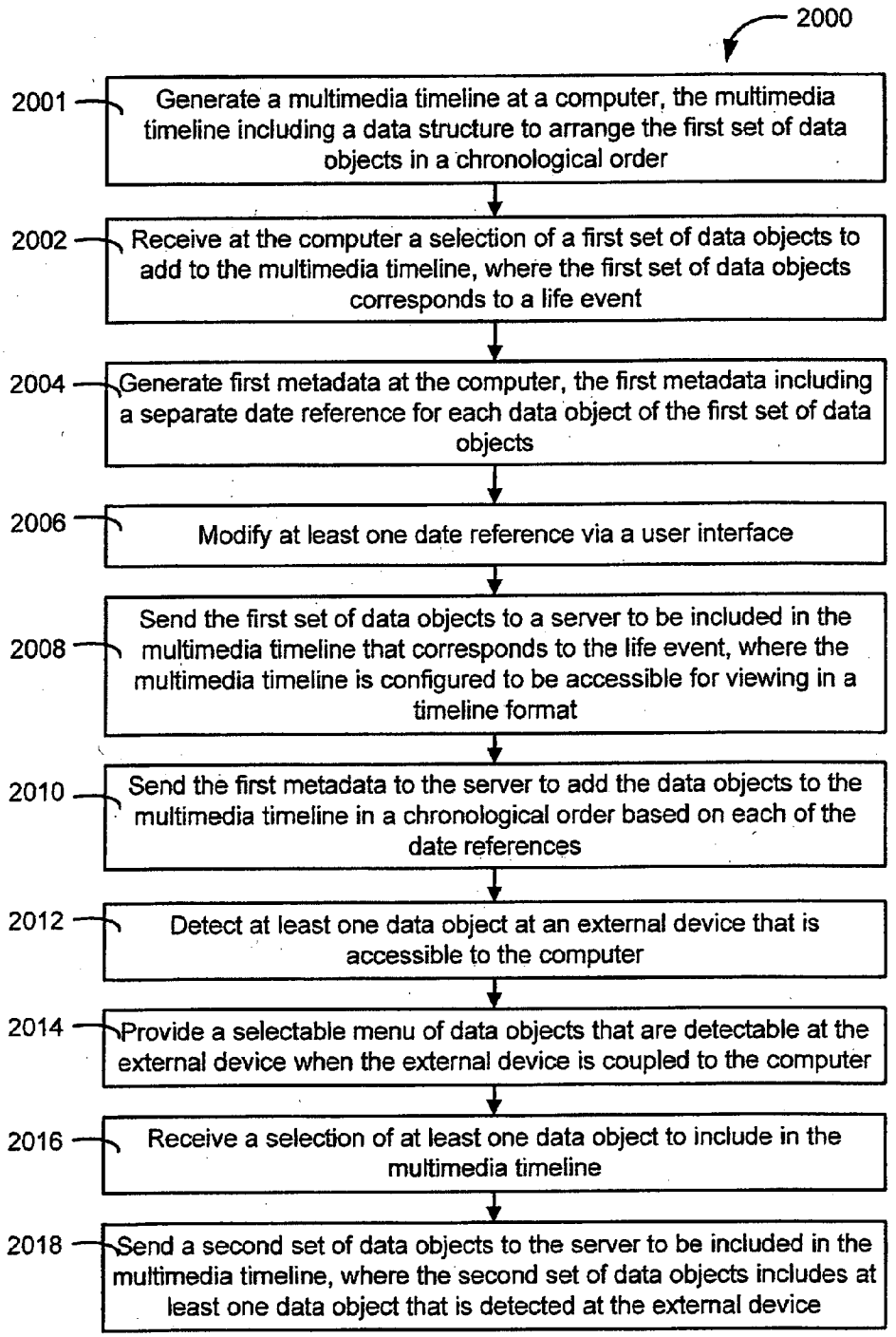
2000
2001
Generate a multimedia timeline at a computer, the multimedia timeline including a data structure to arrange the first set of data objects in a chronological order
2002
Receive at the computer a selection of a first set of data objects to add to the multimedia timeline, where the first set of data objects corresponds to a life event
2004
Generate first metadata at the computer, the first metadata including a separate date reference for each data object of the first set of data objects
2006
Modify at least one date reference via a user interface
2008
Send the first set of data objects to a server to be included in the multimedia timeline that corresponds to the life event, where the multimedia timeline is configured to be accessible for viewing in a timeline format
2010
Send the first metadata to the server to add the data objects to the multimedia timeline in a chronological order based on each of the date references
2012
Detect at least one data object at an external device that is accessible to the computer
2014
Provide a selectable menu of data objects that are detectable at the external device when the external device is coupled to the computer
2016
Receive a selection of at least one data object to include in the multimedia timeline
2018
Send a second set of data objects to the server to be included in the multimedia timeline, where the second set of data objects includes at least one data object that is detected at the external device

FIG. 20

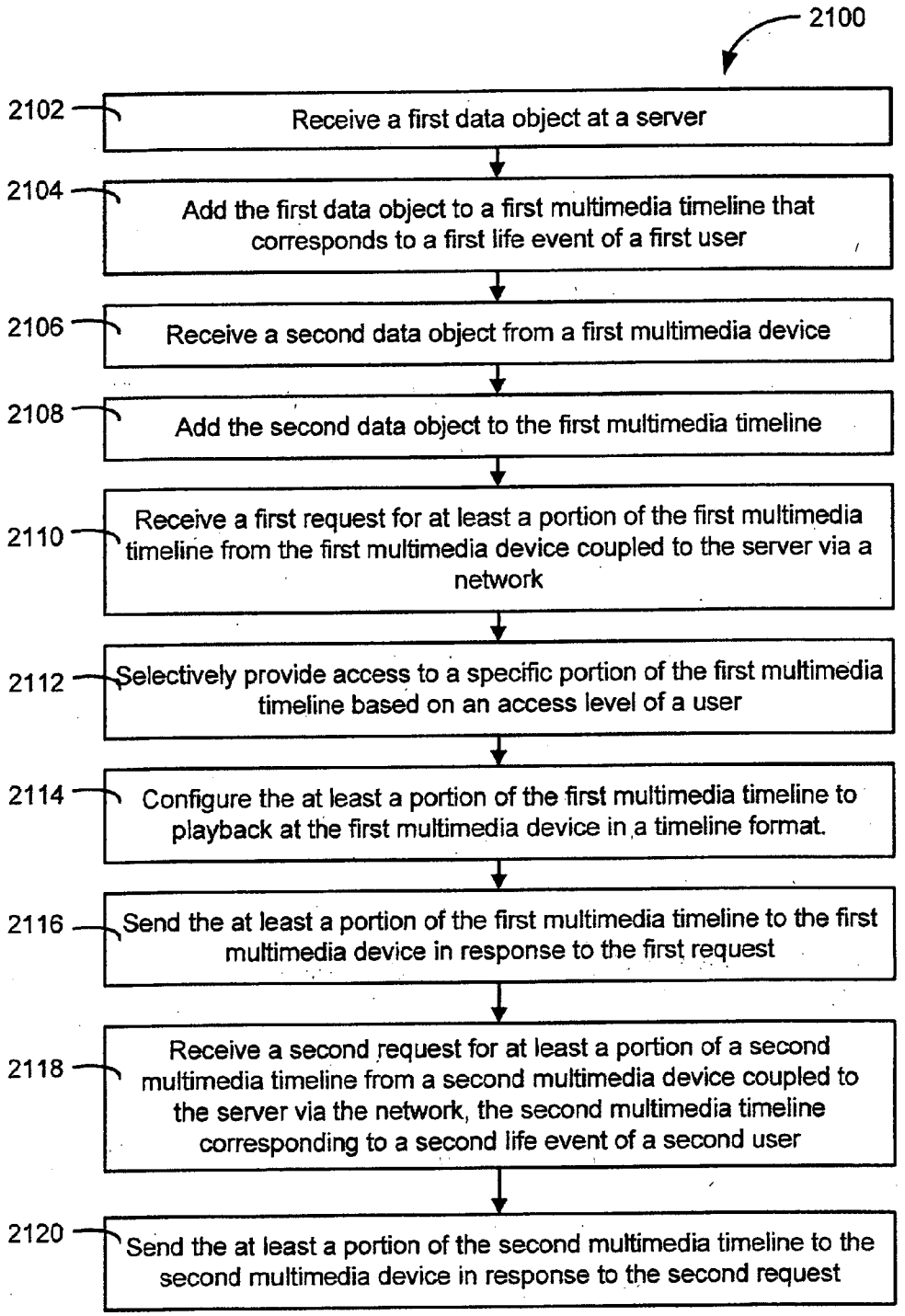
2100
2102
Receive a first data object at a server
2104
Add the first data object to a first multimedia timeline that corresponds to a first life event of a first user
2106
Receive a second data object from a first multimedia device
2108
Add the second data object to the first multimedia timeline
2110
Receive a first request for at least a portion of the first multimedia timeline from the first multimedia device coupled to the server via a network
2112
Selectively provide access to a specific portion of the first multimedia timeline based on an access level of a user
2114
Configure the at least a portion of the first multimedia timeline to playback at the first multimedia device in a timeline format.
2116
Send the at least a portion of the first multimedia timeline to the first multimedia device in response to the first request
2118
Receive a second request for at least a portion of a second multimedia timeline from a second multimedia device coupled to the server via the network, the second multimedia timeline corresponding to a second life event of a second user
2120
Send the at least a portion of the second multimedia timeline to the second multimedia device in response to the second request

FIG. 21

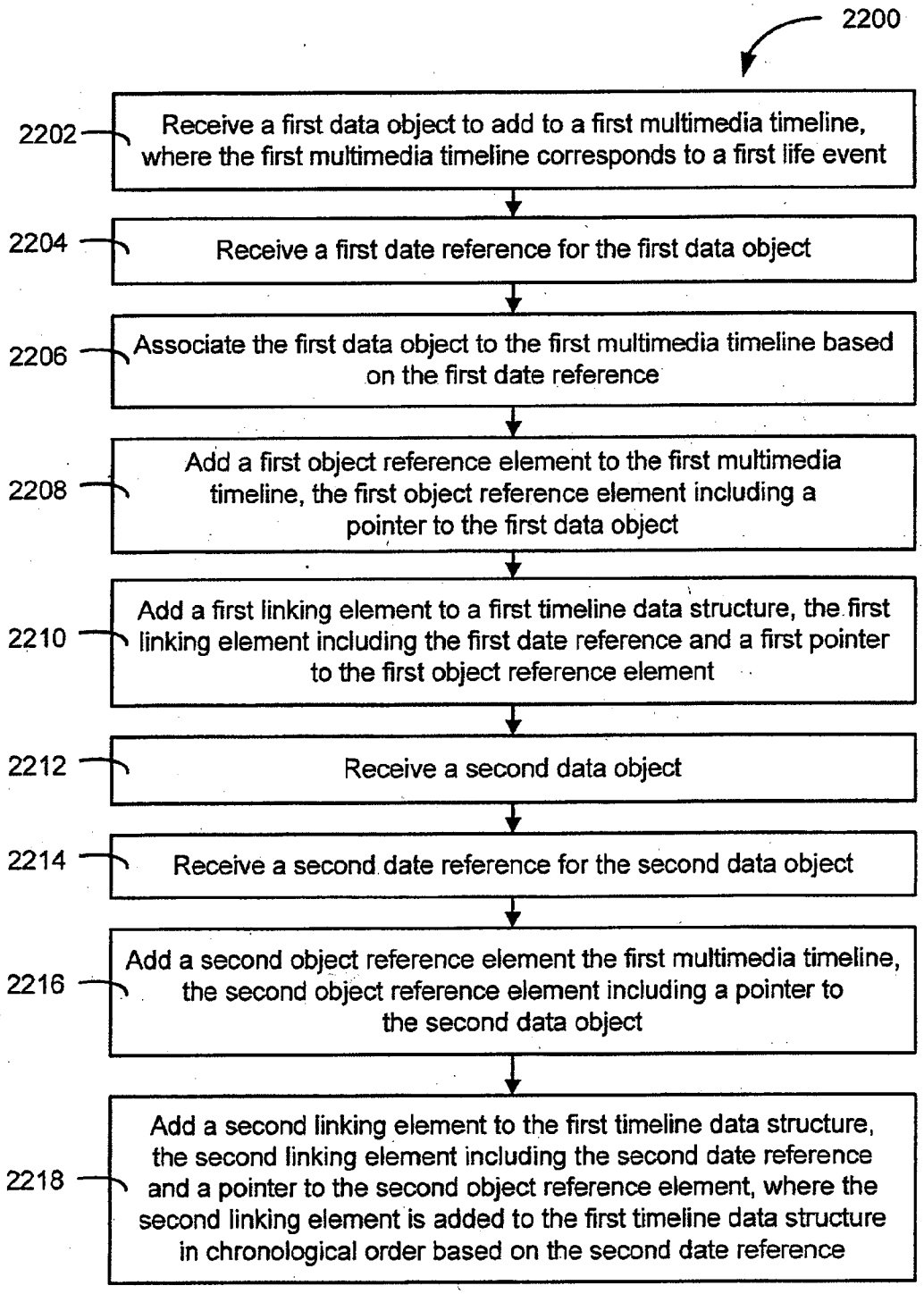
2200
2202
Receive a first data object to add to a first multimedia timeline, where the first multimedia timeline corresponds to a first life event
2204
Receive a first date reference for the first data object
2206
Associate the first data object to the first multimedia timeline based on the first date reference
2208
Add a first object reference element to the first multimedia timeline, the first object reference element including a pointer to the first data object
2210
Add a first linking element to a first timeline data structure, the first linking element including the first date reference and a first pointer to the first object reference element
2212
Receive a second data object
2214
Receive a second date reference for the second data object
2216
Add a second object reference element the first multimedia timeline, the second object reference element including a pointer to the second data object
2218
Add a second linking element to the first timeline data structure, the second linking element including the second date reference and a pointer to the second object reference element, where the second linking element is added to the first timeline data structure in chronological order based on the second date reference

FIG. 22

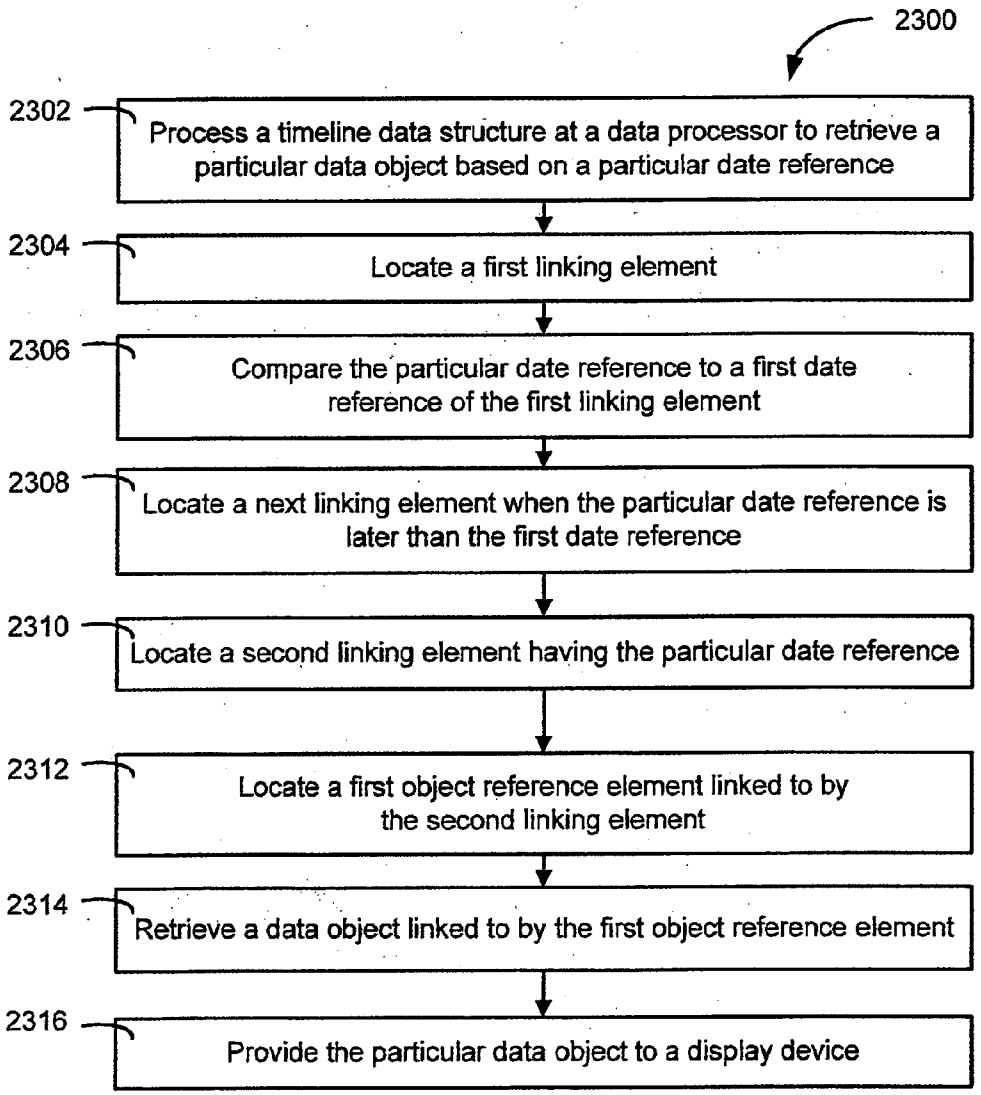
2300
2302
Process a timeline data structure at a data processor to retrieve a particular data object based on a particular date reference
2304
Locate a first linking element
2306
Compare the particular date reference to a first date reference of the first linking element
2308
Locate a next linking element when the particular date reference is later than the first date reference
2310
Locate a second linking element having the particular date reference
2312
Locate a first object reference element linked to by the second linking element
2314
Retrieve a data object linked to by the first object reference element
2316
Provide the particular data object to a display device

FIG. 23

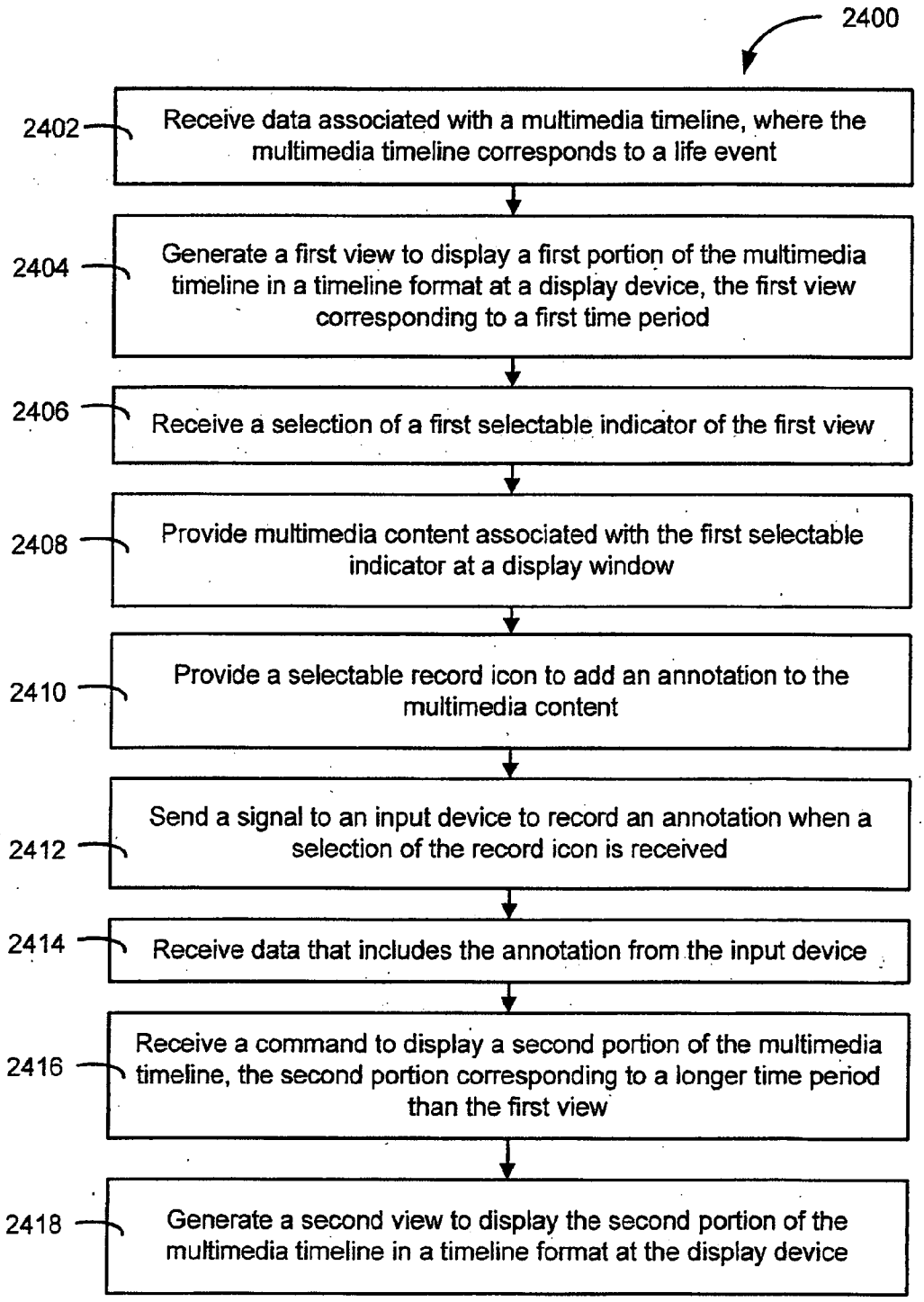
2400
2402
Receive data associated with a multimedia timeline, where the multimedia timeline corresponds to a life event
2404
Generate a first view to display a first portion of the multimedia timeline in a timeline format at a display device, the first view corresponding to a first time period
2406
Receive a selection of a first selectable indicator of the first view
2408
Provide multimedia content associated with the first selectable indicator at a display window
2410
Provide a selectable record icon to add an annotation to the multimedia content
2412
Send a signal to an input device to record an annotation when a selection of the record icon is received
2414
Receive data that includes the annotation from the input device
2416
Receive a command to display a second portion of the multimedia timeline, the second portion corresponding to a longer time period than the first view
2418
Generate a second view to display the second portion of the multimedia timeline in a timeline format at the display device

FIG. 24

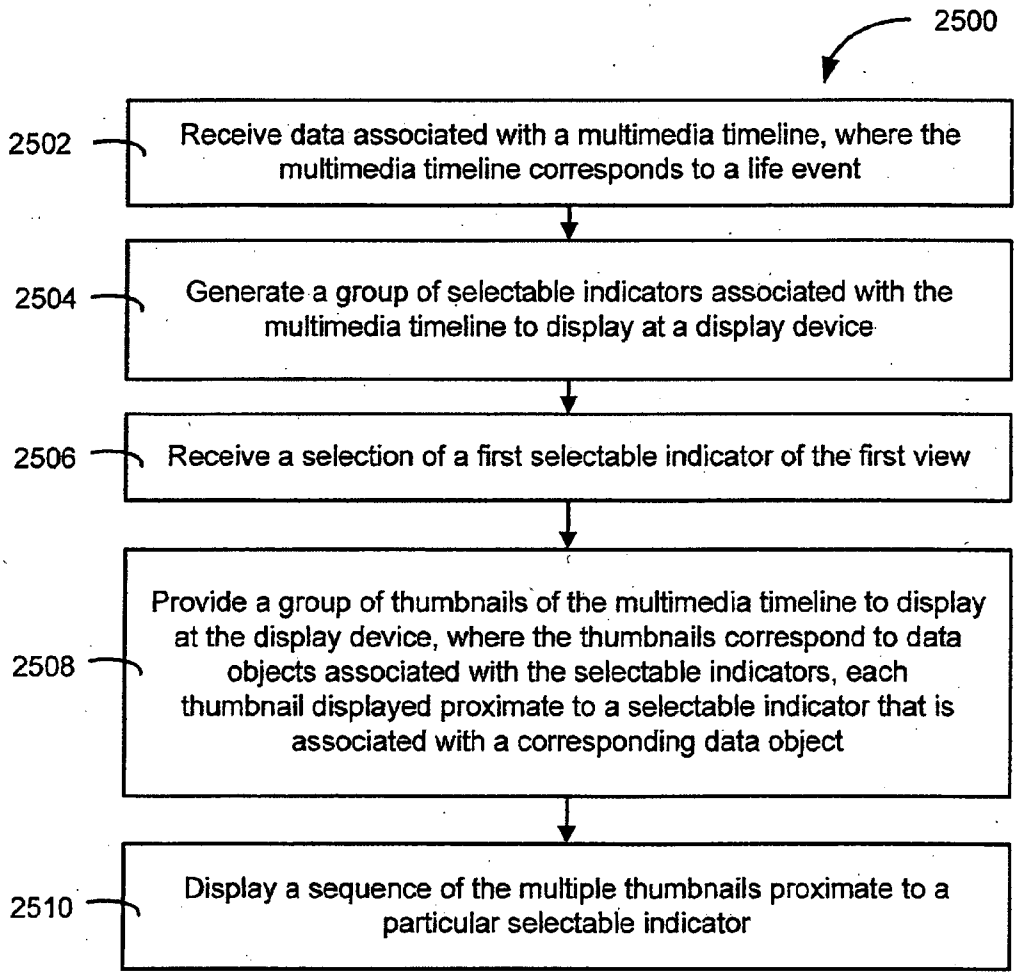
2500
2502
Receive data associated with a multimedia timeline, where the multimedia timeline corresponds to a life event
2504
Generate a group of selectable indicators associated with the multimedia timeline to display at a display device
2506
Receive a selection of a first selectable indicator of the first view
2508
Provide a group of thumbnails of the multimedia timeline to display at the display device, where the thumbnails correspond to data objects associated with the selectable indicators, each thumbnail displayed proximate to a selectable indicator that is associated with a corresponding data object
2510
Display a sequence of the multiple thumbnails proximate to a particular selectable indicator

FIG. 25

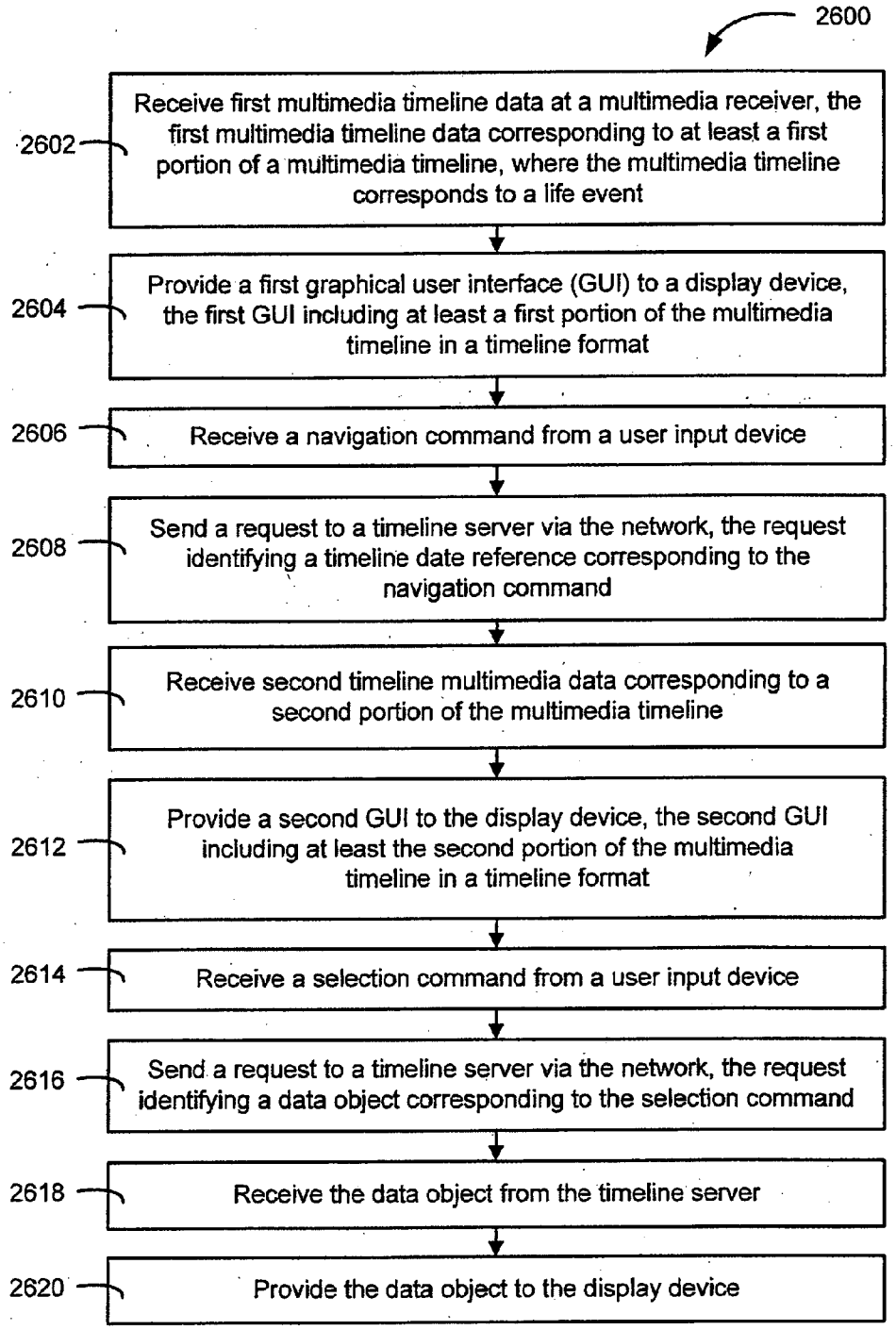
2600
2602
Receive first multimedia timeline data at a multimedia receiver, the first multimedia timeline data corresponding to at least a first portion of a multimedia timeline, where the multimedia timeline corresponds to a life event
2604
Provide a first graphical user interface (GUI) to a display device, the first GUI including at least a first portion of the multimedia timeline in a timeline format
2606
Receive a navigation command from a user input device
2608
Send a request to a timeline server via the network, the request identifying a timeline date reference corresponding to the navigation command
2610
Receive second timeline multimedia data corresponding to a second portion of the multimedia timeline
2612
Provide a second GUI to the display device, the second GUI including at least the second portion of the multimedia timeline in a timeline format
2614
Receive a selection command from a user input device
2616
Send a request to a timeline server via the network, the request identifying a data object corresponding to the selection command
2618
Receive the data object from the timeline server
2620
Provide the data object to the display device

FIG. 26

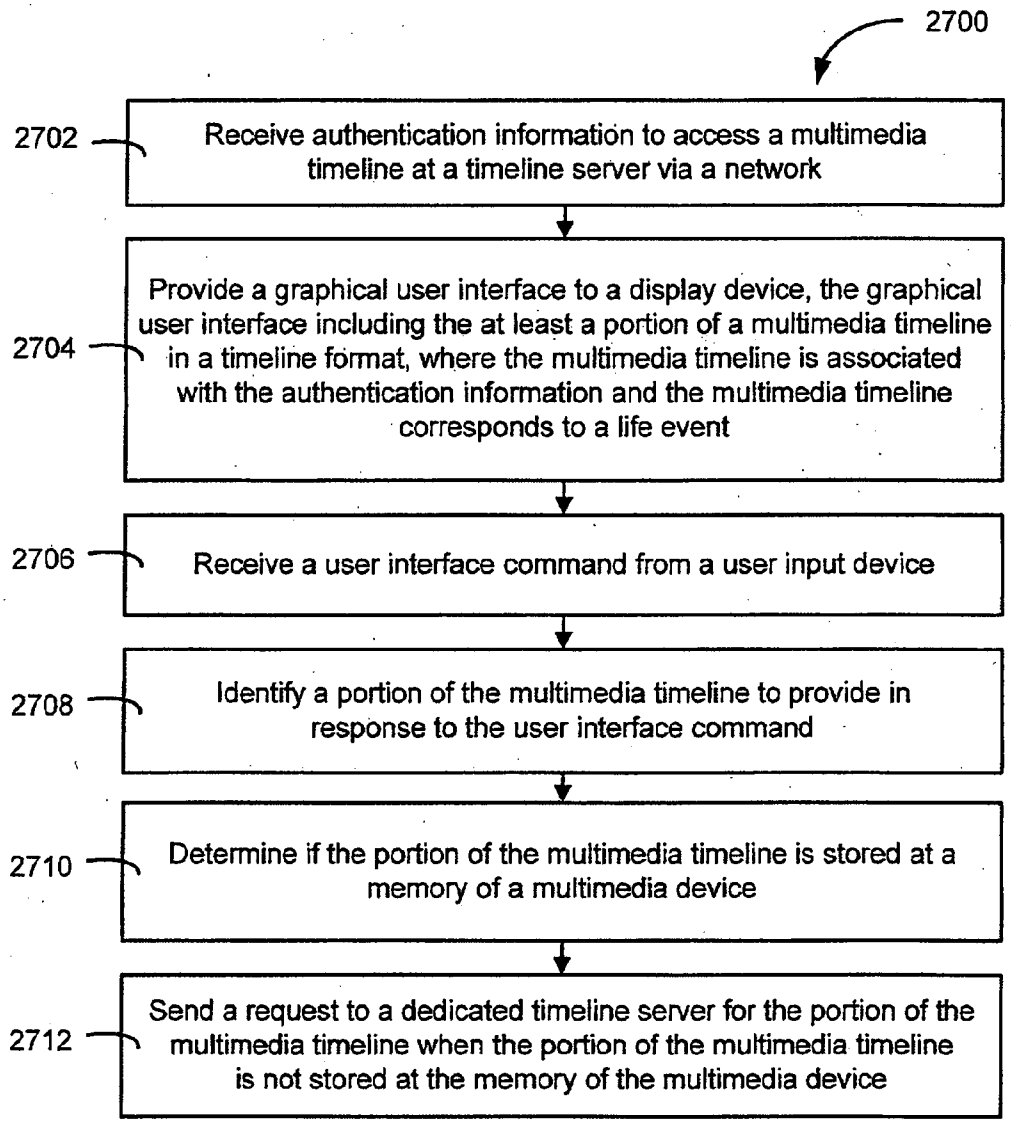
2700
2702
Receive authentication information to access a multimedia timeline at a timeline server via a network
2704
Provide a graphical user interface to a display device, the graphical user interface including the at least a portion of a multimedia timeline in a timeline format, where the multimedia timeline is associated with the authentication information and the multimedia timeline corresponds to a life event
2706
Receive a user interface command from a user input device
2708
Identify a portion of the multimedia timeline to provide in response to the user interface command
2710
Determine if the portion of the multimedia timeline is stored at a memory of a multimedia device
2712
Send a request to a dedicated timeline server for the portion of the multimedia timeline when the portion of the multimedia timeline is not stored at the memory of the multimedia device

FIG. 27

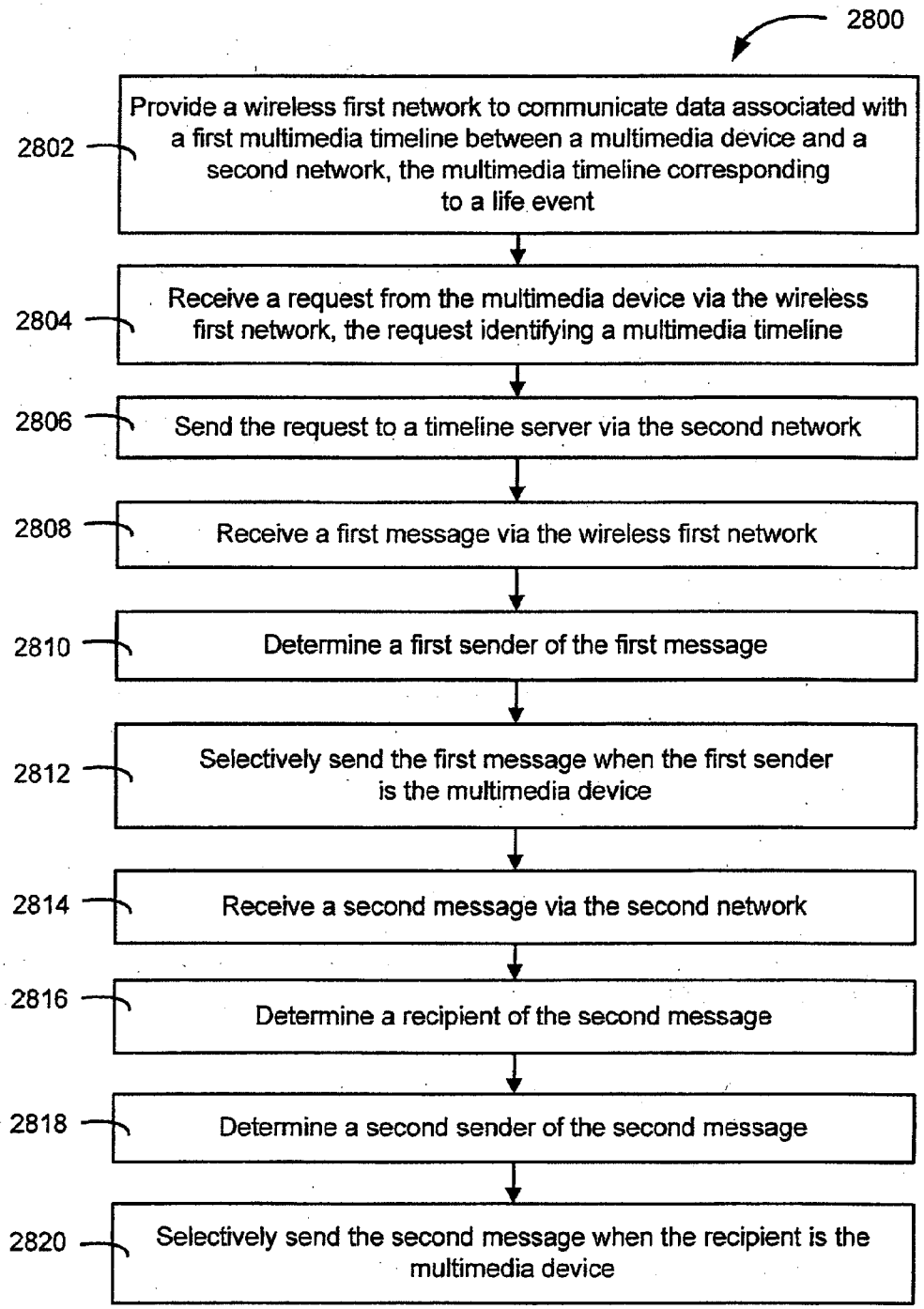
2800
2802
Provide a wireless first network to communicate data associated with a first multimedia timeline between a multimedia device and a second network, the multimedia timeline corresponding to a life event
2804
Receive a request from the multimedia device via the wireless first network, the request identifying a multimedia timeline
2806
Send the request to a timeline server via the second network
2808
Receive a first message via the wireless first network
2810
Determine a first sender of the first message
2812
Selectively send the first message when the first sender is the multimedia device
2814
Receive a second message via the second network
2816
Determine a recipient of the second message
2818
Determine a second sender of the second message
2820
Selectively send the second message when the recipient is the multimedia device

FIG. 28

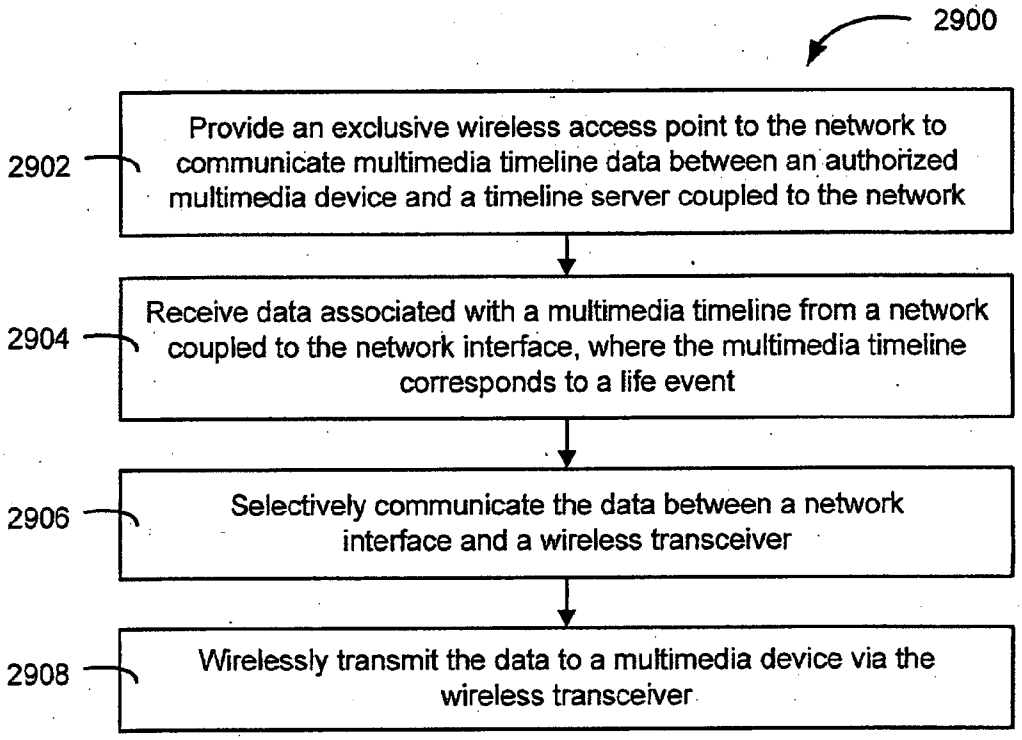
2900
2902
Provide an exclusive wireless access point to the network to communicate multimedia timeline data between an authorized multimedia device and a timeline server coupled to the network
2904
Receive data associated with a multimedia timeline from a network coupled to the network interface, where the multimedia timeline corresponds to a life event
2906
Selectively communicate the data between a network interface and a wireless transceiver
2908
Wirelessly transmit the data to a multimedia device via the wireless transceiver

FIG. 29

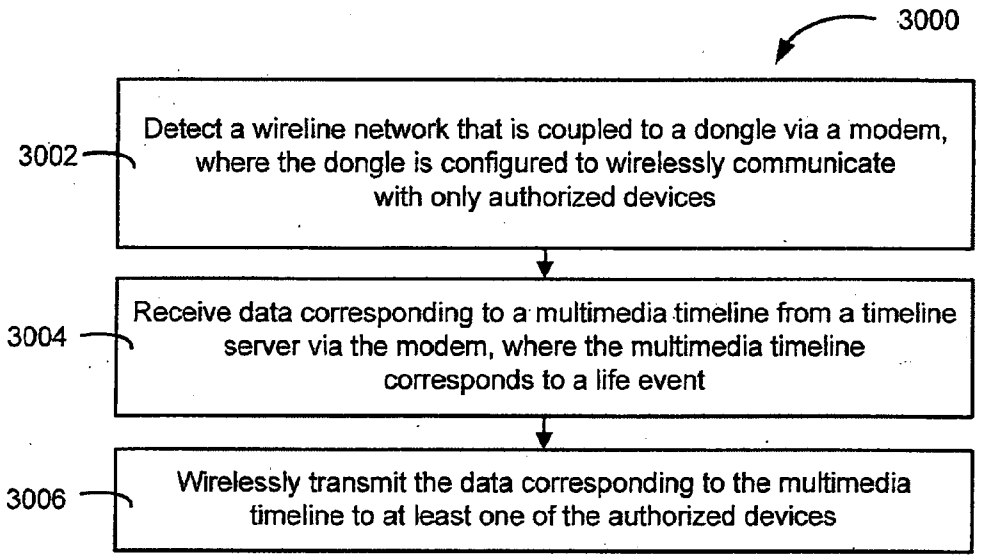
3000
3002
Detect a wireline network that is coupled to a dongle via a modem, where the dongle is configured to wirelessly communicate with only authorized devices
3004
Receive data corresponding to a multimedia timeline from a timeline server via the modem, where the multimedia timeline corresponds to a life event
3006
Wirelessly transmit the data corresponding to the multimedia timeline to at least one of the authorized devices

FIG. 30

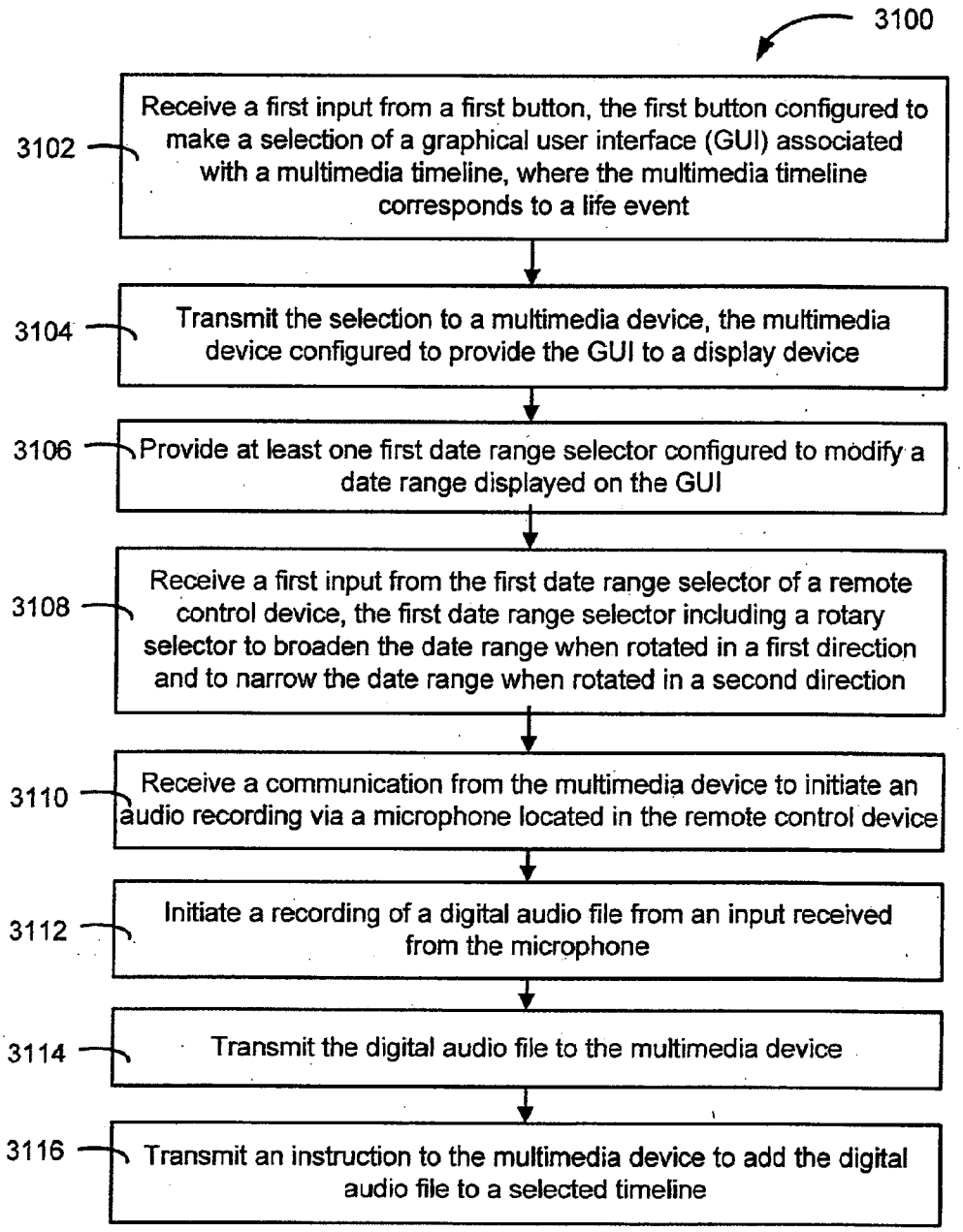
3100
3102
Receive a first input from a first button, the first button configured to make a selection of a graphical user interface (GUI) associated with a multimedia timeline, where the multimedia timeline corresponds to a life event
3104
Transmit the selection to a multimedia device, the multimedia device configured to provide the GUI to a display device
3106
Provide at least one first date range selector configured to modify a date range displayed on the GUI
3108
Receive a first input from the first date range selector of a remote control device, the first date range selector including a rotary selector to broaden the date range when rotated in a first direction and to narrow the date range when rotated in a second direction
3110
Receive a communication from the multimedia device to initiate an audio recording via a microphone located in the remote control device
3112
Initiate a recording of a digital audio file from an input received from the microphone
3114
Transmit the digital audio file to the multimedia device
3116
Transmit an instruction to the multimedia device to add the digital audio file to a selected timeline

FIG. 31

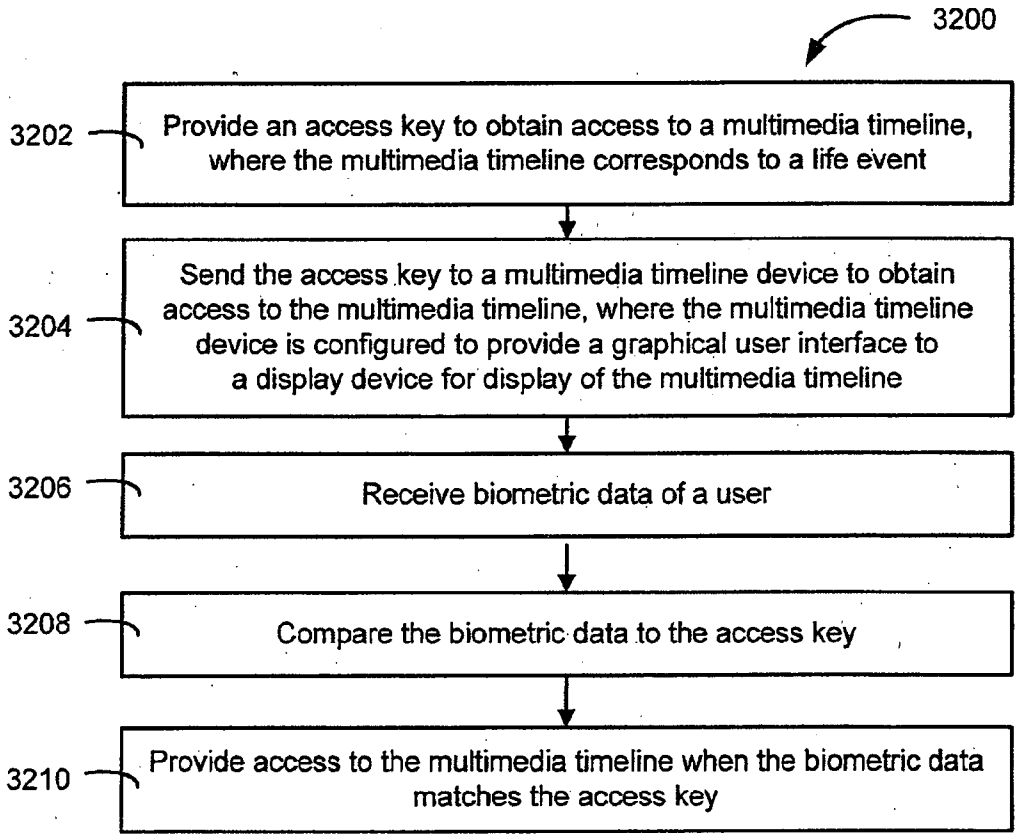
3200
3202
Provide an access key to obtain access to a multimedia timeline, where the multimedia timeline corresponds to a life event
3204
Send the access key to a multimedia timeline device to obtain access to the multimedia timeline, where the multimedia timeline device is configured to provide a graphical user interface to a display device for display of the multimedia timeline
3206
Receive biometric data of a user
3208
Compare the biometric data to the access key
3210
Provide access to the multimedia timeline when the biometric data matches the access key

FIG. 32

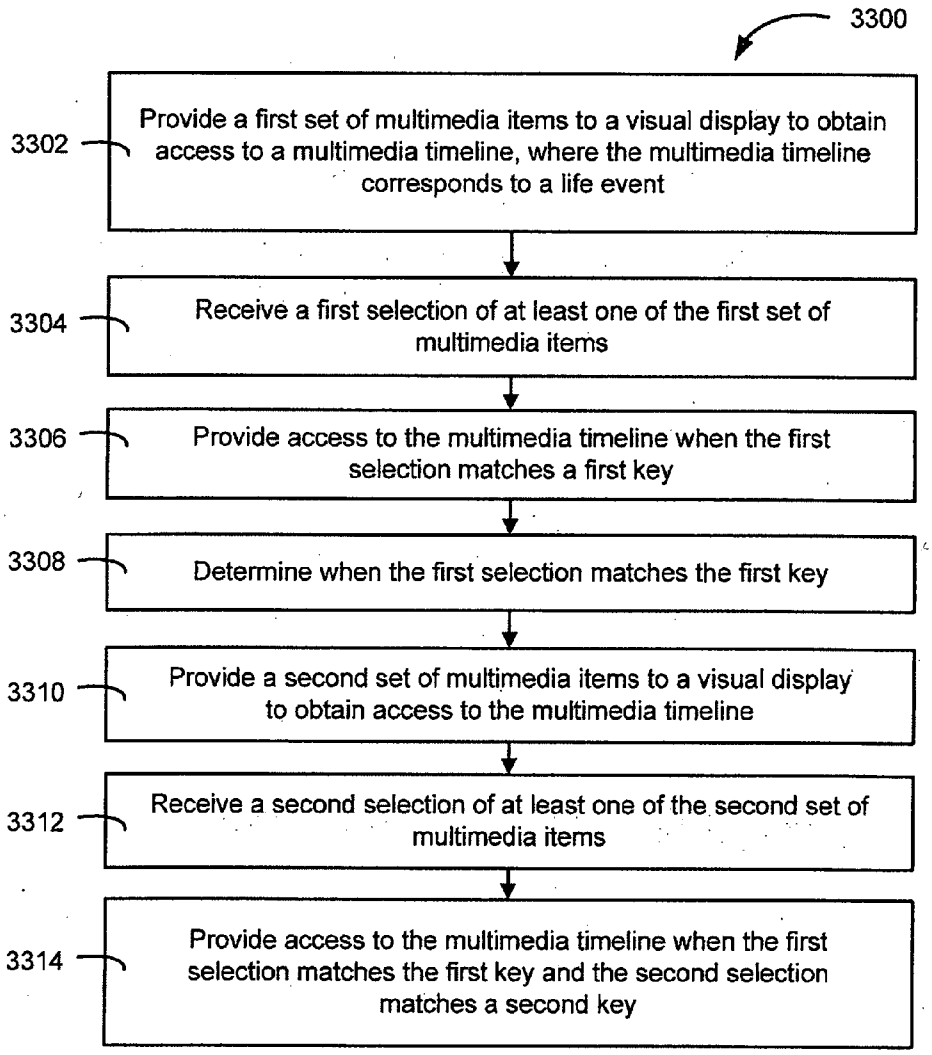
3300
3302
Provide a first set of multimedia items to a visual display to obtain access to a multimedia timeline, where the multimedia timeline corresponds to a life event
3304
Receive a first selection of at least one of the first set of multimedia items
3306
Provide access to the multimedia timeline when the first selection matches a first key
3308
Determine when the first selection matches the first key
3310
Provide a second set of multimedia items to a visual display to obtain access to the multimedia timeline
3312
Receive a second selection of at least one of the second set of multimedia items
3314
Provide access to the multimedia timeline when the first selection matches the first key and the second selection matches a second key

FIG. 33

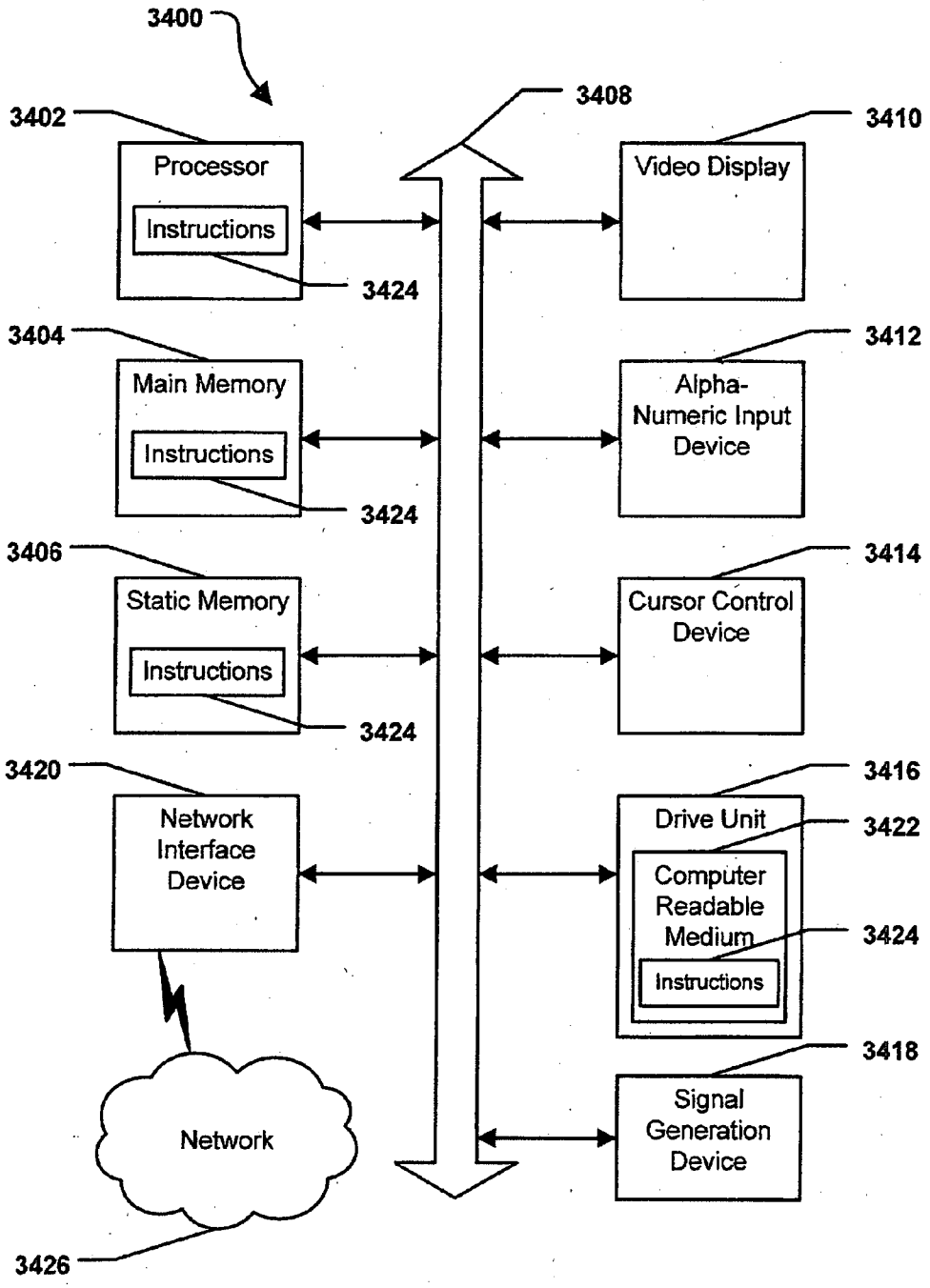
3400
3402
Processor
Instructions
3424
3404
Main Memory
Instructions
3424
3406
Static Memory
Instructions
3424
3420
Network Interface Device
Network
3426
3408
3410
Video Display
3412
Alpha-Numeric Input Device
3414
Cursor Control Device
3416
Drive Unit
3422
Computer Readable Medium
3424
Instructions
3418
Signal Generation Device

FIG. 34

SYSTEM AND METHOD OF ACCESSING A MULTIMEDIA TIMELINE

FIELD OF THE DISCLOSURE

[0001] The present disclosure relates generally to accessing a multimedia timeline.

BACKGROUND

[0002] Portable electronic devices such as audio recorders, digital cameras, and video cameras, are becoming increasingly popular. As a result, an ever-increasing amount and variety of multimedia data, such as pictures, recordings, documents, and emails are becoming available. Traditionally, multimedia data is organized and stored by data type, such as photographs in a photo album, music in an audio player memory, and video on a digital video disk (DVD). However, organizing, storing and sharing multimedia data electronically can be cumbersome and confusing, especially to inexperienced computer users. Hence, there is a need for an improved system and method of accessing a multimedia timeline.

BRIEF DESCRIPTION OF THE DRAWINGS

[0003] FIG. **1** is a general diagram of a particular illustrative embodiment of a system to provide a multimedia timeline;

[0004] FIG. **2** is a block diagram of another illustrative embodiment of a system to provide a multimedia timeline;

[0005] FIG. **3** is a block diagram of another illustrative embodiment of a system to provide a multimedia timeline;

[0006] FIG. **4** is a diagram of a particular illustrative embodiment of a device that may be used to interact with a multimedia timeline user interface;

[0007] FIG. **5** is a block diagram of a particular illustrative embodiment of a system to access a multimedia timeline;

[0008] FIG. **6** is a block diagram of another illustrative embodiment of a system to access a multimedia timeline;

[0009] FIG. **7** is a block diagram of another illustrative embodiment of a system to access a multimedia timeline;

[0010] FIG. **8** is a block diagram of another illustrative embodiment of a system to access a multimedia timeline;

[0011] FIG. **9** is a block diagram of another illustrative embodiment of a system to access a multimedia timeline;

[0012] FIG. **10** is a block diagram of a particular illustrative embodiment of a system to wirelessly communicate multimedia timeline data;

[0013] FIG. **11** is a general diagram of another illustrative embodiment of a system to access a multimedia timeline;

[0014] FIG. **12** is a diagram of another illustrative embodiment of a device that may be used to interact with a multimedia timeline user interface;

[0015] FIG. **13** is a general diagram of a particular illustrative embodiment of data structures associated with multimedia timelines;

[0016] FIG. **14** is a diagram of a particular illustrative embodiment of an interface to display a multimedia timeline;

[0017] FIG. **15** is a diagram of another illustrative embodiment of an interface to display a multimedia timeline;

[0018] FIG. **16** is a diagram of another illustrative embodiment of an interface to display a multimedia timeline;

[0019] FIG. **17** is a diagram of another illustrative embodiment of an interface to display a multimedia timeline;

[0020] FIG. **18** is a diagram of another illustrative embodiment of an interface to display a multimedia timeline;

[0021] FIG. **19** is a diagram of another illustrative embodiment of an interface to provide security for a multimedia timeline;

[0022] FIG. **20** is a flow diagram of a particular illustrative embodiment of a method of providing a multimedia timeline;

[0023] FIG. **21** is a flow diagram of another illustrative embodiment of a method of providing a multimedia timeline;

[0024] FIG. **22** is a flow diagram of a particular illustrative embodiment of a method of adding data objects to a multimedia timeline;

[0025] FIG. **23** is a flow diagram of another illustrative embodiment of a method of providing a multimedia timeline;

[0026] FIG. **24** is a flow diagram of a particular illustrative embodiment of a method of displaying a multimedia timeline;

[0027] FIG. **25** is a flow diagram of another illustrative embodiment of a method of displaying a multimedia timeline;

[0028] FIG. **26** is a flow diagram of a particular illustrative embodiment of a method of accessing a multimedia timeline;

[0029] FIG. **27** is a flow diagram of another illustrative embodiment of a method of accessing a multimedia timeline;

[0030] FIG. **28** is a flow diagram of a particular illustrative embodiment of a method of wirelessly communicating multimedia timeline data;

[0031] FIG. **29** is a flow diagram of another illustrative embodiment of a method of wirelessly communicating multimedia timeline data;

[0032] FIG. **30** is a flow diagram of another illustrative embodiment of a method of wirelessly communicating multimedia timeline data;

[0033] FIG. **31** is a flow diagram of a particular illustrative embodiment of a method of interacting with a multimedia timeline user interface;

[0034] FIG. **32** is a flow diagram of another illustrative embodiment of a method of accessing a multimedia timeline;

[0035] FIG. **33** is a flow diagram of a particular illustrative embodiment of a method of providing security for a multimedia timeline; and

[0036] FIG. **34** is a diagram of an illustrative embodiment of a general computer system.

DETAILED DESCRIPTION OF THE DRAWINGS

[0037] The present disclosure is generally directed to a system and method of providing multimedia timelines. In a particular illustrative embodiment, a system to provide a multimedia timeline may include a multimedia device to provide multimedia timeline content to a display device. The multimedia device may be configured to receive navigation and selection commands from a user input device. In a particular embodiment, the multimedia device may be configured to receive one or more access key devices. Each access key device may store one or more access keys to obtain multimedia timeline access. An access key may include information to identify a designated user or one or more multimedia timelines associated with the access key. The multimedia device may communicate with a timeline server via a network, such as the Internet, and customer premises equipment (CPE). In a particular embodiment, a computer may also communicate with the timeline server via the network.

[0038] In a particular embodiment, the multimedia device may be a timeline docking station that is dedicated to provid-

ing multimedia timeline sessions without requiring a separate personal computer. The multimedia device may request and receive multimedia timeline data from the timeline server via the network. The multimedia device may generate a user-friendly graphical user interface (GUI) to provide the multimedia timeline data at a display device, such as a monitor or television.

[0039] In a particular embodiment, the multimedia timeline GUI may display a timeline playlist that includes any type of data objects, such as audio data, video data, digital image data, text data, documents, email, web-enabled data such as Flash data or markup language data, any other type of multimedia data, or any combination thereof. The multimedia timeline GUI may provide the data objects in a chronological ordered timeline format and may enable a user to select and view any data object independent of data type. The multimedia timeline GUI may enable a user to zoom in or zoom out between daily, weekly, and monthly views of the multimedia timeline data. The multimedia timeline GUI may also enable a user to attach one or more audio clips or other data objects to an item in the multimedia timeline.

[0040] In a particular embodiment, the multimedia device may have one or more ports, such as a Universal Serial Bus (USB) port, to enable data transfer with external devices, such as digital cameras, video cameras, audio recorders or players, or other types of multimedia storage or capture devices. Multimedia data from external devices may be automatically uploaded to the multimedia device and sent to the timeline server to be stored in chronological order in one or more multimedia timelines.

[0041] In a particular embodiment, the multimedia device may have an access key port that may be configured to receive an access key. The multimedia device may enforce a security policy that may limit viewing or editing access to a multimedia timeline based on identification data obtained from an inserted access key device. In a particular embodiment, the multimedia device may request multimedia timeline data automatically upon insertion of an access key device into the access key port. In a particular embodiment, the multimedia device may include an illuminable area surrounding the access key port to visually indicate that unviewed timeline material is available.

[0042] In a particular embodiment, the access key device may include a unique or semi-unique identifier corresponding to a particular user and associated with one or more multimedia timelines. In a particular embodiment, the access key device may include a Radio Frequency Identification (RFID) tag for identification by the multimedia device. In a particular embodiment, one or more master key devices may be encoded to allow unrestricted viewing and editing of a multimedia timeline, and one or more valet key devices may be encoded to only allow restricted viewing or editing of the multimedia timeline.

[0043] In a particular embodiment, the multimedia device may provide additional security via a visual security interface that displays a selection of multiple data objects from the user's multimedia timeline or from other sources. Access may be granted to the multimedia timeline based on a correct selection by the user of one or more predetermined data objects or sequences of data objects. Viewing of the requested timeline may be disabled after a certain number of unsuccessful attempts.

[0044] In a particular embodiment, the CPE may include a wireless router and a modem, such as a digital subscriber line (DSL) modem or cable modem. In a particular embodiment, the CPE may wirelessly communicate with the multimedia device via a dedicated wireless network. In a particular embodiment, a dongle may be attached to the modem or to the computer to provide a dedicated and exclusive wireless connection to the multimedia device at locations that may not be otherwise equipped with a wireless network.

[0045] In a particular embodiment, the user input device may enable a user to wirelessly navigate and select multimedia objects at a multimedia timeline graphical user interface (GUI) provided by the multimedia device. In a particular embodiment, the user input device may be a dedicated device for use with multimedia timeline viewing and may be configured to resemble a hockey puck with user-friendly controls. The user input device may include a rotatable outer ring to enable a user to chronologically navigate a multimedia timeline GUI. The user input device may include an independently rotatable inner ring to enable a user to zoom in, zoom out, or change views. The user input device may include lights or slots to indicate a degree of zoom.

[0046] In a particular embodiment, the user input device may enable a user to select a data object or other item of the multimedia timeline GUI by pressing downward on the outer ring of the user input device in a direction that is substantially perpendicular to the plane of rotation of the outer ring. The user input device may also include other controls to enable multimedia timeline operations, such as a menu control and a favorites control. The user input device may include one or more illuminable indicators to indicate a new message or new item added to an available multimedia timeline. The user input device may also include a microphone that enables a user to record audio annotations to be transmitted to the multimedia device for attachment to a multimedia timeline data object.

[0047] In a particular embodiment, data objects and metadata that are associated with a multimedia timeline may be sent to a multimedia timeline server from the computer. A multimedia timeline may be created by capturing data objects at the computer, such as audio data, video data, digital image data, documents, email, other media types, or any combination thereof. In a particular embodiment, a user of the computer may drag and drop icons representing the data objects to a target such as a timeline icon. The data objects may be sent to the timeline server for later retrieval during a multimedia timeline viewing session. In a particular embodiment, annotations may be added to one or more data objects at the computer for inclusion in the multimedia timeline.

[0048] In a particular embodiment, the computer or the timeline server may generate metadata to link data objects to other data objects in a multimedia timeline. The metadata can link new data objects to already stored data objects in the multimedia timeline. In a particular embodiment, the metadata can link one or more stored data objects to one or more other stored data objects. In a particular embodiment, the computer may generate metadata associated with one or more captured data objects and may send both the metadata and the data objects to the timeline server.

[0049] During operation, a user may populate a multimedia timeline stored at a timeline server with multimedia data objects via the computer. In an embodiment, at least a portion of the multimedia data and metadata associated with the user's multimedia timeline may be uploaded to the timeline

server from other network-enabled devices, such as a cellular phone or a personal digital assistant (PDA), as illustrative, non-limiting examples.

[0050] In a particular embodiment, a user may begin a multimedia timeline viewing session by inserting an access key device into a multimedia device that can provide multimedia timeline sessions and that has access to the timeline server. The multimedia device may authenticate the access key and request multimedia timeline data from the timeline server. In another embodiment, an authentication process, such as sending a user identification and password to the timeline server, may be used to establish a timeline viewing session at a multimedia device that is not configured to receive an access key device.

[0051] In a particular embodiment, the multimedia device may receive the requested multimedia timeline data and may display a multimedia timeline GUI at a display device. The user may navigate the multimedia timeline GUI and may select data objects by using a user input device that is coupled to the multimedia device.

[0052] Referring to FIG. **1**, a particular illustrative embodiment of a system to provide a multimedia timeline is depicted and generally designated **100**. The system **100** includes a multimedia device **102** to provide multimedia content to a display device **104**. The multimedia device **102** may be coupled to a user input device **106**. The multimedia device **102** and a computer **114** are in communication with a network **112** via customer premises equipment (CPE) **110**.

[0053] In a particular embodiment, the multimedia device **102** may send a request for multimedia timeline data, including multimedia data objects associated with a multimedia timeline, metadata relating to the multimedia data objects, and metadata relating to the multimedia timeline. The multimedia timeline data may be received from the network **112** via the CPE **110**. The multimedia device **102** may generate a user-friendly graphical user interface (GUI) to provide at least a portion of the multimedia timeline data at the display device **104**. An illustrative, non-limiting example of a multimedia timeline GUI is illustrated at FIG. **14**.

[0054] In a particular embodiment, the multimedia device **102** may have an access key port **150** that may be configured to receive an access key **140**. The access key **140** may include a unique or semi-unique identifier corresponding to a particular user and associated with one or more multimedia timelines that are available via the network **112**. In a particular embodiment, the multimedia device **102** may send a request via the network **112** to receive data relating to multimedia timelines that are associated with the access key **140**. In a specific embodiment, the multimedia device **102** may request the multimedia timeline data automatically upon insertion of the access key device **140** into the access key port **150**. In a particular embodiment, the multimedia device **102** may include an indicator to provide an indication that at least one multimedia timeline associated with an access key **140** or a user of the multimedia device **102** has been modified to include multimedia content since a last viewing by the user. As an illustrative, non-limiting example, an illumination device proximate to the key port **150** may visually indicate that unviewed material is available to the user.

[0055] In a particular embodiment, the multimedia device **102** may have one or more ports **152** to enable data transfer with an external device (not shown). In a particular embodiment, the port **152** may be a serial port. In a specific embodiment, the port **152** may be a Firewire or Universal Serial Bus (USB) port.

[0056] In a particular embodiment, the user input device **106** may enable a user of the system **100** to navigate and to select multimedia objects via a multimedia timeline GUI displayed at the display device **104**. The user input device **106** may include a scroll wheel **120** that may function as a date range selector that enables a user to chronologically navigate through a multimedia timeline by rotating the scroll wheel **120** as indicated by directional arrow **122**. The scroll wheel **120** may adjust a date range of the multimedia timeline displayed at a multimedia timeline GUI view earlier in time when rotated in a first direction and later in time when rotated in a second direction. The user input device **106** may have a jog wheel **124** that may function as a date range selector that enables a user to zoom in or zoom out at a multimedia timeline GUI view by broadening or narrowing a date range of timeline data displayed at the multimedia timeline GUI view, based on a direction of rotation. At least one indicator **136** may illuminate to indicate the date range or degree of zoom. The user input device **106** also may have a selection control **130**, such as a button, that may be actuated by compressing the user input device as indicated by the directional arrow **132**. In a particular embodiment, the user input device **106** may also include other controls to enable multimedia timeline operations, such as a menu control **126** and a favorites control **128**. In a particular embodiment, the user input device **106** may have a transmitter (not shown) to transmit commands to the multimedia device **102** via a wireless connection **108** in response to an actuation of one or more of the controls **120**, **124**, **126**, **128**, and **130**.

[0057] In a particular embodiment, the computer **114** may enable an upload of data objects and metadata that are associated with a multimedia timeline to a multimedia timeline server (not shown) that may be in communication with the network **112**. In a particular embodiment, the computer **114** may generate multimedia data objects, receive multimedia data objects via one or more input devices (not shown), or any combination thereof. In a particular embodiment, the computer **114** may further generate metadata associated with the data objects. In a specific embodiment, metadata associated with a data object may include a date reference, a user identification, a thumbnail representation, a multimedia type description, a data object size, other metadata, or any combination thereof. In a particular embodiment, the computer **114** may automatically prompt a user to generate and send data objects, metadata associated with the data objects, metadata associated with one or more multimedia timelines, or any combination thereof, to a multimedia timeline server (not shown) via the network **112** upon generating or receiving a multimedia data object. In another embodiment, the computer may generate and send data objects, metadata associated with the data objects, metadata associated with a multimedia timeline, or any combination thereof, in response to a user selection of data objects for inclusion into a multimedia timeline.

[0058] In a particular embodiment, the CPE **110** include routers, local area network devices, modems, such as digital subscriber line (DSL) modems, any other suitable devices for facilitating communication between the multimedia device **106**, the computer **114**, and the network **112** or any combination thereof. In a particular embodiment, the CPE **110** may wirelessly communicate with the multimedia device **102**. In a

specific embodiment, the multimedia device **102** may communicate with the CPE **110** via Institute of Electrical and Electronics Engineers (IEEE) 802.11x standards.

[0059] In a particular embodiment, the multimedia device **102**, the user input device **106**, and the CPE **110** may be dedicated components to facilitate system configuration, communication and display of multimedia timelines. In another embodiment, one or more of the multimedia device **102**, the user input device **106** and the CPE **110** may be configured to perform functions that are not related to communication and display of multimedia timelines. As an illustrative, non-limiting example, the user input device **106** may be a traditional remote control device configured to control the display device **104**.

[0060] During operation, in a particular embodiment, a user may populate a multimedia timeline stored at a timeline server (not shown) with multimedia data objects, metadata associated with the data objects, metadata associated with the multimedia timeline, or any combination thereof. In a particular embodiment, the multimedia timeline may be a group of multimedia data objects that have been assembled by one or more users to be displayed via a chronological graphical user timeline interface.

[0061] In a particular embodiment, the multimedia timeline may correspond to a life event. In a particular embodiment, the life event may include at least a portion of a person's life. In a particular embodiment, the life event may include a business event. The business event may include a meeting, a presentation, a conference, a project, a career, any other business event, or any combination thereof. In a particular embodiment, the life event may include a social event. The social event may include a religious activity, a performance, a party, a sporting activity, a fraternal organization activity, a recreational activity, a festival, any other social events, or any combination thereof.

[0062] In a particular embodiment, at least a portion of the multimedia data objects and metadata of the user's multimedia timeline may be uploaded to a timeline server from the computer **114**. In an embodiment, the timeline server may store multimedia data objects and metadata at a data center that stores multimedia timelines, data objects associated with multimedia timelines, metadata associated with multimedia timelines, or any combination thereof. In an embodiment, at least a portion of the multimedia data and metadata associated with the user's multimedia timeline may be uploaded to a timeline server from other network-enabled devices, such as a cellular phone, a PDA, other network devices, or any combination thereof.

[0063] In a particular embodiment, a user of the system **100** may begin a multimedia timeline viewing session by inserting the access key device **140** into the multimedia device **102**. The multimedia device **102** may authenticate an access key received from the access key device **140** and request multimedia timeline data via the network **112**. The requested multimedia timeline data may correspond to one or more multimedia timelines associated with the access key.

[0064] In a particular embodiment, the multimedia device **102** may receive multimedia timeline data and display a chronological multimedia timeline GUI at the display device **104**. The user may navigate the GUI and may select data objects, metadata, or any combination thereof, with the user input device **106**. The multimedia device **106** may respond to wireless commands received from the user input device **106** and may update the GUI displayed at the display device **104** accordingly.

[0065] In a particular embodiment, the multimedia device **102** may be integrated with other devices such as a set-top box device, a router, a modem, a display device, any other electronic device, or any combination thereof. In a particular embodiment, the CPE **110**, the network **112**, the computer **114**, or any combination thereof, may be physically located away from the multimedia device **102**, the display device **104**, the user input device **106**, or any combination thereof.

[0066] Referring to FIG. **2**, another illustrative embodiment of a system to provide a multimedia timeline is depicted and generally designated **200**. A timeline system **202** communicates with a first user system **212**, a second user system **214** and a third user system **216** via a network **210**. The network **210** may be a public network, such as the Internet, a private network, or any combination thereof.

[0067] The timeline system **202** may include a timeline server **204**. In a particular embodiment, the timeline server **204** may receive and store data associated with multiple multimedia timelines, such as multimedia data objects, metadata relating to multimedia data objects, metadata relating to one or more multimedia timelines, other data associated with one or more multimedia timelines, or any combination thereof. In a particular embodiment, the timeline server **204** may receive requests from one or more of the user systems **212**, **214**, and **216** for multimedia timeline data via the network **210**. The timeline server may provide multimedia timeline data associated with one or more multimedia timelines to a request originator via the network **210**.

[0068] The timeline system **202** may include a content acquisition server **206**. In a particular embodiment, the content acquisition server **206** may receive multimedia content from one or more content providers **208**. In a particular embodiment, the content acquisition server **206** may provide multimedia content to the timeline server **204**.

[0069] In a particular embodiment, the first user system **212** may communicate with the timeline system **202** via the network **210** and first customer premises equipment (CPE), such as a first modem **220**. A display device **224** may be coupled to a first multimedia device **222** to display a multimedia timeline graphical user interface (GUI) and to display or otherwise provide multimedia data associated with one or more multimedia timelines. A user input device **226** may be wirelessly coupled to the first multimedia device **222** to generate user navigation and selection commands for a multimedia timeline GUI. A computer **228** may be coupled to the modem **220** to facilitate sending multimedia data objects, metadata associated with the data objects, metadata associated with one or more multimedia timelines, or any combination thereof, to the timeline server **204**. In a particular embodiment, the first user system **212** may represent a system configured to provide multimedia timeline sessions for a first user or family, such as in a first house or apartment unit.

[0070] In a particular embodiment, the second user system **214** may communicate with the timeline system **202** via the network **210** and second customer premises equipment (CPE), such as a second modem **230**. In a particular embodiment, the second modem **230** may be wirelessly coupled to a second multimedia device **232**. A second display device **236** may be coupled to the second multimedia device **232**. A representative access key device **234** may be coupled to the second multimedia device **232** to indicate or identify one or

more users or multimedia timelines associated with the access key device **234**. In a particular embodiment, the second user system **214** may also represent a system configured to provide multimedia timeline sessions for a second user or family, such as in a second house or apartment unit.

[0071] In a particular embodiment, the third user system **216** may communicate with the timeline system **202** via the network **210** and third customer premises equipment (CPE), such as a third modem **240**. In a particular embodiment, the third modem **240** may be wirelessly coupled to a third multimedia device **242**, a fourth multimedia device **244**, and fifth multimedia device **246**. A third display device **248** may be coupled to the third multimedia device **242**. A fourth display device **250** may be coupled to the fourth multimedia device **244**. A fifth display device **252** may be coupled to the fifth multimedia device **246**. In a particular embodiment, the third user system **216** may represent a system configured to provide multimedia timeline sessions for multiple users, such as in a library, a coffee house, a dormitory, office, hotel, apartment complex, or other community location.

[0072] During operation, in a particular embodiment, a user may send multimedia data objects to be associated with one or more particular multimedia timelines to the timeline server **204** from the computer **228**. The timeline server **204** may receive the multimedia data objects and update the one or more particular multimedia timelines to include or to link to the received multimedia data objects. A user may engage in a multimedia timeline viewing session at any of the user systems **212**, **214**, or **216**, by coupling the access key device **234** to any of the multimedia devices **222**, **232**, **242**, **244**, or **246**. A multimedia device **222**, **232**, **242**, **244**, or **246** receiving the access key device **234** may receive one or more access keys from the access key device **234** to authenticate the user and request multimedia timeline data from the timeline server **204**.

[0073] Although only a single timeline system **202** having a single timeline server **204** is depicted, it should be understood that in other embodiments, one or more timeline systems **202** may each include one or more timeline servers **204**. In a particular embodiment, the timeline system **202** may include an authentication server that receives authentication information from one or more multimedia devices and sends a verification of the authentication information to the one or more multimedia devices providing the authentication information, the timeline server, or any combination thereof. The authentication server may be part of a timeline server, a separate server, or any combination thereof. In addition, it should be understood that the user systems **212**, **214**, and **216** may be representative of any number of systems capable of providing one or more multimedia timeline sessions to users by requesting and receiving multimedia timeline data from one or more timeline servers **204**.

[0074] Referring to FIG. **3**, another illustrative embodiment of a system to provide a multimedia timeline is depicted and generally designated **300**. A timeline server **302** communicates with a multimedia device **306**, a first computer **312**, a second computer **314**, and a network-capable device, such as a cell phone **316**, via a network **304**. The first computer **312** may be coupled to the network **304** via a modem **308**. The multimedia device **306** may be coupled to the network **304** via wireless communication with a wireless router **310** that may be coupled to the modem **308**. In a particular embodiment, the wireless router **310** and the modem **308** may be integrated into a single customer premises equipment (CPE). The network **304** may be a public network, such as the Internet, a private network, or any combination thereof.

[0075] The timeline server **302** may include a timeline server (TLS) processor **320** and a memory **322**. The memory **322** may include an authorization module **324**, a communication module **326**, and a storage and retrieval module **328**.

[0076] In a particular embodiment, the authorization module **324** may be executable by the TLS processor **320** to receive authentication information corresponding to one or more users requesting access to one or more multimedia timelines. The authorization module **324** may also be executable by the TLS processor **320** to determine an authority of an authenticated user to access one or more requested multimedia timelines. In a particular embodiment, the authorization module **324** may be executable by the TLS processor **320** to enforce one or more multi-tier security policies corresponding to the requested multimedia timelines. In a particular embodiment, the authorization module **324** may be executable by the TLS processor **320** to generate one or more security challenges and to determine access to a requested multimedia timeline based on a received response to the security challenge.

[0077] In a particular embodiment, the communication module **326** may be executable by the TLS processor **320** to send and receive data via the network **304**. In a particular embodiment, the communication module **326** may be executable by the TLS processor **320** to receive multimedia data objects and metadata associated with data objects from one or more devices **306**, **312**, **314**, or **316** via the network **304** for inclusion into one or more multimedia timelines. In a particular embodiment, the communication module **326** may be executable by the TLS processor **320** to send multimedia timeline data, including timeline metadata, multimedia data object metadata, multimedia data objects, or any combination thereof, to one or more requesting devices **306**, **312**, **314**, or **316** via the network **304**.

[0078] In a particular embodiment, the storage and retrieval module **328** may be executable by the TLS processor **320** to receive and store multimedia data associated with one or more designated multimedia timelines. In a particular embodiment, the storage and retrieval module **328** may be executable by the TLS processor **320** to store multimedia timeline data in association with a designated timeline based on a chronological order. In a particular embodiment, the storage and retrievable module **328** may be executable by the TLS processor **320** to retrieve multimedia timeline data, including timeline metadata, multimedia data object metadata, multimedia data objects, or any combination thereof, to provide to an authorized requesting device.

[0079] In a particular embodiment, multimedia timeline data may include a data structure representative of a timeline and including a data structure identification and one or more metadata elements. The metadata elements may include pointers or other references to one or more data objects associated with the multimedia timeline. In a particular embodiment, the data structure may include a chronologically ordered group of metadata to enable chronological navigation of associated data objects in a timeline format at via a graphical user interface.

[0080] In a particular embodiment, the storage and retrieval module **328** may be executable by the TLS processor **320** to receive a data object, metadata including a pointer or other reference to a data object, or any combination thereof, for addition to a designated multimedia timeline that has an asso-

ciated data structure at the timeline server **302**. The storage and retrieval module **328** may be executable by the TLS processor **320** to determine a date reference associated with the data object or metadata. The storage and retrieval module **328** may be executable by the TLS processor **320** to determine a position within a chronologically ordered group of metadata associated with the designated multimedia timeline based on the date reference. The storage and retrieval module **328** may be executable by the TLS processor **320** to add metadata, including a pointer or other reference to the data object, at the determined position. Similarly, in a particular embodiment, the storage and retrieval module **328** may be executable by the TLS processor **320** to receive and store one or more annotations associated with one or more data objects by directly attaching the annotation to the associated data object, by indirectly attaching the annotation to the associated data object via a link or pointer, or any combination thereof.

[0081] The multimedia device **306** may include a multimedia device (MMD) processor **340** and a memory **342** that may be accessible to the MMD processor **340**. A wireless network interface **344** may be coupled to the MMD processor **340** to enable wireless communication with the wireless router **310**. A display interface **346** may be coupled to MMD processor **340** to provide audio and video information to a display device (not shown). A key interface **348** may be coupled to the MMD processor **340** to enable user authentication with the multimedia device **306** via an access key provided by an access key device (not shown). A user input device (UID) interface **350** may be coupled to the MMD processor **340** to receive commands from a user input device (not shown). A data port **352** may be coupled to the MMD processor **340** to enable data transfer between an external data storage device (not shown) and the multimedia device **306**.

[0082] In a particular embodiment, an upload module **354** may executable by the MMD processor **340** to receive data via the data port **352**. In a particular embodiment, the upload module **354** may be executable by the MMD processor **340** to receive multimedia data objects, such as text documents, email documents, image files, audio files, video files, any other type of multimedia data, or any combination thereof. In a particular embodiment, the upload module **354** may executable by the MMD processor **340** to send data objects, metadata associated with data objects, other data, or any combination thereof, to the timeline server **302**.

[0083] In a particular embodiment, a metadata module **356** may be executable by the MMD processor **340** to generate metadata associated with a multimedia data object received via the data port **352**. In a particular embodiment, the generated metadata may include information such as a user identification, a timeline identification, a date of creation of the multimedia data object, a date of uploading the multimedia data, a user-specified date reference, other information associated with a multimedia timeline, other information associated with a user, other information associated with a data object, or any combination thereof.

[0084] In a particular embodiment, a graphical user interface (GUI) module **358** may be executable by the MMD processor **340** to display data associated with a multimedia timeline at a display device (not shown) coupled to the display interface **346**. In a particular embodiment, the GUI module **358** may be executable by the MMD processor **340** to process navigation and selection commands that are received via the user input device interface **350**.

[0085] In a particular embodiment, a security module **360** may be executable by the MMD processor **340** to receive security information and to determine an authorization to access one or more multimedia timelines. In a particular embodiment, the security module **360** may be executable by the MMD processor **340** to receive data acquired via the key interface **348**. In another embodiment, the security module **360** may be executable by MMD processor **340** to send data to the GUI module **358** to provide a security interface at a display device. The security module **360** may receive and process information corresponding to navigation and selection of the security interface.

[0086] The first computer **312** may include a computer (CP) processor **370** and a memory **372** that may be accessible to the CP processor **370**. A network interface **374** enables data communication with the modem **308**. A data port **376** may enable data transfer with one or more external data storage devices (not shown), such as a digital camera, a MP3 player, a cell phone, a personal digital assistant (PDA), other devices that store multimedia data, or any combination thereof. The computer **312** can receive user input data via a keyboard interface **378** and a pointing device (PD) interface **380**.

[0087] In a particular embodiment, a timeline module **382** may be executable by the CP processor **370** to facilitate data operations associated with one or more multimedia timelines. In a particular embodiment, the timeline module **382** may be executable by the CP processor **370** to generate metadata associated one or more multimedia data objects. In a specific embodiment, the multimedia data objects may be received via the data port **376**, the network interface **308**, other data input interfaces, or any combination thereof. In a specific embodiment, the multimedia data objects may be generated at the first computer **312**, such as via a word processor, an email editor, a digital image editor, other multimedia applications, or any combination thereof.

[0088] In a particular embodiment, the timeline module **382** may be executable by the CP processor **370** to provide a user interface that enables a user to associate data objects to one or more multimedia timelines by performing a drag-and-drop operation of data objects to a designated target, such as a multimedia timeline icon, folder, or other target.

[0089] In a particular embodiment, the timeline module **382** may be executable by the CP processor **370** to inventory at least a portion of the memory **372** or other memory accessible to the computer **312** and to compile at least one list of available multimedia data, including text documents, email documents, image files, audio files, video files, any other type of multimedia data, or any combination thereof. In a particular embodiment, the timeline module **382** may be executable by the CP processor **370** to prompt a user of the computer **312** for a selection of multimedia content to be included in a multimedia timeline. In a particular embodiment, the timeline module **382** may be executable by the CP processor **370** to receive a selection of one or more multimedia data objects and to generate metadata associated with the selected data objects. In a particular embodiment, the selected multimedia data objects may be representative of or associated with an event, such as a time period between a user-specified beginning date and ending date, and may be representative of at least a portion of a person's life.

[0090] In a particular embodiment, the timeline module **382** may be executable by the CP processor **370** to automatically add one or more types of data objects and corresponding metadata to a locally stored data structure associated with a

multimedia timeline without receiving a user input when the data objects are received at the first computer **312**. In a particular embodiment, the timeline module **382** may be executable by the CP processor **370** to receive one or more multimedia data type preferences for one or more designated multimedia timelines so that data objects corresponding to the data type preferences are automatically associated with the designated multimedia timelines when received at the first computer **312**.

[0091] In a particular embodiment, the timeline module **382** may be executable by the CP processor **370** to receive one or more date references associated with one or more data objects via a user interface. In a particular embodiment, the timeline module **382** may be executable by the CP processor **370** to receive one or more annotations associated with one or more data objects. In a particular embodiment, an annotation may include text, audio data, video data, multiple types of data, or any combination thereof.

[0092] In a particular embodiment, the timeline module **382** may be executable by the CP processor **370** to generate metadata associated with one or more multimedia timelines. In a particular embodiment, the timeline metadata may include a user identification, a timeline identification, security information such as authentication information or authorization information, other information associated with a multimedia timeline, other information associated with a user, or any combination thereof. In a particular embodiment, the timeline metadata may include one or more pointers, references, identifiers, or any combination thereof, indicating one or more data objects, metadata associated with one or more data objects, thumbnails, or any combination thereof. In a particular embodiment, the timeline metadata may be stored in a chronological order according to a date reference.

[0093] In a particular embodiment, the timeline module **382** may be executable by the CP processor **370** to send multimedia timeline data, such as multimedia data objects, metadata associated with one or more data objects, timeline metadata, or any combination thereof, to the timeline server **302** via the network **304**. In a particular embodiment, the timeline module **382** may be executable by the CP processor **370** to send multimedia timeline data as one or more data objects and a chronologically ordered group of metadata including pointers to the data objects. In a particular embodiment, the timeline module **382** may be executable by the CP processor **370** to provide a security mechanism to enable only an authorized user of a particular timeline to add data to the particular multimedia timeline, such as data objects, metadata, annotations, other data, or any combination thereof.

[0094] During operation, multimedia data objects and metadata associated with the multimedia data objects may be sent to the timeline server **302** from the first computer **312**. In a particular embodiment, at least a portion of a memory accessible to the first computer **312** may be inventoried for available multimedia content. In a specific embodiment, the memory may be inventoried for only selected multimedia data types. In a specific embodiment, the memory may be inventoried for all available multimedia data independent of data type.

[0095] In a particular embodiment, inventoried memory may include memory available via one or more hard drives of the first computer **312** or other computers, network devices, digital video recorder (DVR) storage devices, memory devices of external digital devices such as digital cameras, personal digital assistants (PDAs), mobile phones, audio players or recording devices, video players or recording devices, other digital storage devices, or any combination thereof. A selectable list of located multimedia data objects may be displayed to a user of the first computer **312**, and selected multimedia data objects, metadata associated with the data objects, timeline metadata, or any combination thereof, may be sent to the timeline server **302** for inclusion in one or more multimedia timelines.

[0096] In a particular embodiment, multimedia data objects may also be sent to the timeline server **302** for inclusion in one or more multimedia timelines from other sources, such as the multimedia device **306**, the second computer **314**, the cell phone **316**, other multimedia sources, or any combination thereof.

[0097] In a particular embodiment, the timeline server **302** can receive the multimedia data objects, the metadata associated with the data objects, timeline metadata, or any combination thereof, via the network **304**. The timeline server **302** can determine an authority of a device or user to upload multimedia data to be associated with a particular multimedia timeline. The timeline server **302** may then format and store the received data so that the received data may be associated with one or more authorized multimedia timelines and may be retrievable for display to as user in a chronological sequence.

[0098] In a particular embodiment, a user may request to view a multimedia timeline via the multimedia device **306** by inserting an access key device (not shown) at the key interface **348**. An access key that is received from the access key device may be authenticated by the multimedia device **306** and a request for one or more multimedia timelines associated with the access key may be communicated to the timeline server **302**. Upon receiving the request for multimedia timeline data, the timeline server **302** may determine an authority of the requester to receive the timeline data. After authorization, the timeline server **302** may provide data associated with the one or more requested multimedia timelines to the multimedia device **306** via the network **304**.

[0099] In a particular embodiment, the multimedia device **306** may display a graphical user interface (GUI) indicating at least a portion of the received multimedia timeline data at display device (not shown). The GUI may include a chronological display of indicators that indicate individual multimedia data objects associated with a multimedia timeline. The multimedia device **306** may receive navigation and selection commands from a user input device and may provide selected data objects to a user via the display interface **346**.

[0100] In a particular embodiment, the multimedia timeline data may also be received and displayed at devices other than the multimedia device **306** that are capable of providing authentication information of a user and of displaying the multimedia data associated with the multimedia timeline. For example, the first computer **312**, the second computer **314**, and the cell phone **316** may be capable of requesting, receiving, and displaying multimedia data associated with one or more multimedia timelines.

[0101] Referring to FIG. **4**, a particular illustrative embodiment of a device that may be used to interact with a multimedia timeline user interface is depicted and generally designated **400**. In a particular embodiment, the user input device **400** may be configured for dedicated use with a multimedia timeline system. In a particular embodiment, the user input device **400** may be dimensioned and configured for hand-held use. In a particular embodiment, the user input device **400**

may communicate with a multimedia device, such as the multimedia device **102** of FIG. **1**, via wireless radio frequency transmissions. In a specific embodiment, the user input device **400** may communicate with a multimedia device via at least one of Bluetooth communication protocol transmissions, infrared transmissions, and radio frequency transmissions.

[0102] In a particular embodiment, the user input device **400** may include contacts (not shown) to receive a battery (not shown), such as a rechargeable battery. In a particular embodiment, the user input device **400** may be configured to enable charging of the battery via inductive charging. The user input device **400** may include a visual indicator (not shown) to indicate battery power.

[0103] The user input device **400** includes an external scroll wheel **402** that may rotate relative to the body of the user input device **400**, as indicated by the first directional indicators **404**. In a particular embodiment, a rotation of the first directional indicator may cause the user input device **400** to wirelessly transmit an instruction to a multimedia device to chronologically navigate a multimedia timeline graphical user interface (GUI). In a particular embodiment, the scroll wheel **402** may transmit an instruction to adjust a date range of a multimedia timeline displayed at a GUI earlier in time when rotated in a first direction and to adjust the date range later in time when rotated in a second direction. In a particular embodiment, the user input device **420** may include other controls, such as buttons (not shown), to adjust the date range earlier in time and later in time.

[0104] The user input device **400** may include a zoom-in control **406** and a zoom-out control **408**. In a particular embodiment, the zoom-in control **406** may be actuated to cause the user input device **400** to wirelessly transmit a wireless instruction to a multimedia device to provide an enhanced view of a selected multimedia timeline data object. In a particular embodiment, the zoom-out control **408** may be actuated to cause the user input device **400** to wirelessly transmit an instruction to provide a reduced view of a selected multimedia timeline data object. In a particular embodiment, the zoom-in control **406** may be a button to narrow a date range displayed at a multimedia timeline GUI, and the zoom-out control **408** may be a button to broaden a date displayed at the multimedia timeline GUI.

[0105] The user input device **400** may also include a first control **410**. In a particular embodiment, the first control **410** may be a "menu" control that may be actuated to cause the user input device **400** to wirelessly transmit an instruction to display one or more menu options associated with a multimedia timeline.

[0106] The user input device **400** may include a second control **412**. In a particular embodiment, the second control **412** may be a "favorites" control that may be actuated to cause the user input device **400** to wirelessly transmit an instruction to display one or more user-defined lists or selections of multimedia objects of a multimedia timeline.

[0107] The user input device **400** may include a select control **414**. In an alternative embodiment, the user input device **400** may include a select control **420** that may be a button positioned on a top surface of the user input device **400**. In a particular embodiment, an actuation of the select control **414** or **420** may cause the user input device **400** to wirelessly transmit an instruction indicating a selection of one or more selectable components of a multimedia timeline GUI. In a specific embodiment, the select control **414** may be actuated by vertically compressing the user input device **400**, as indicated by the second directional indicators **416**.

[0108] The user input device **400** may include a microphone **418** to capture and store audio information. In a particular embodiment, the user input device **400** may include a memory (not shown) and a controller (not shown) to enable audio information received via the microphone **418** to be wirelessly transmitted to a multimedia device for storage and upload to a multimedia timeline server. In a specific embodiment, the microphone **418** may be operable to receive and transmit audio annotations by a user to be associated with one or more multimedia data objects of a multimedia timeline selected or displayed at a multimedia timeline GUI when the annotation is received. In a particular embodiment, an annotation may be designated to relate to a portion of a timeline. As a illustrative, non-limiting example, the annotation may relate to a particular time period, such as a second, a minute, an hour, a day, a week, a month, a year, a decade, a century, a millennium, or any combination thereof.

[0109] In a particular embodiment, the user input device **400** may include a data port (not shown) to enable data transfer with external devices. In a particular embodiment, multimedia files may be received at the data port, stored in the memory of the user input device **400**, and transmitted to a multimedia device to add to a multimedia timeline. In a particular embodiment, the data port may be any type of current of future data port, capable of supporting one or more communication protocols, including but not limited to Universal Serial Bus (USB), Firewire, Bluetooth, and IEEE 802.11x.

[0110] Referring to FIG. **5**, a particular illustrative embodiment of a system to access a multimedia timeline is depicted and generally designated **500**. A multimedia device **502** may be coupled to a video content source **512**. The multimedia device **502** may be further coupled to a key device master **532**. The multimedia device **502** may also be coupled to a key device valet **538**. The multimedia device **502** may be further coupled to one or more multimedia data devices, including a digital video disc (DVD) player **550**, a radio/compact disc (CD) player **552**, a cell phone **554**, a scanner **556**, a video camera **558**, a microphone **560**, a personal digital assistant (PDA) **562**, a camera **564**, a memory stick **566**, and a Moving Picture Experts Group Audio Layer 3 (MP3) player **568**.

[0111] The multimedia device **502** may include a multimedia device (MMD) processor **504** and a memory **506** that may be accessible to the MMD processor **504**. The MMD processor **504** may be coupled to a network interface **508** for communication with a video content source **512** via a network **510**. The MMD processor **504** may be coupled to a display interface **514** to provide video and audio content to a display device (not shown). The MMD processor **504** may be coupled to a user input device (UID) interface **516** receive commands from a user input device (not shown). The MMD processor **504** may be coupled to a port **518** to receive data from one or more external multimedia data sources, such as the representative multimedia data sources **550-568**. The MMD processor **504** may be coupled to a key interface **520** to receive information from one or more key devices **532** and **538**. In a particular embodiment, the key interface **520** may include a digital signal interface, a physical interface, a wireless interface, or any combination thereof. In a particular embodiment, a RFID interface **522** may enable wireless radio frequency communication with one or more key devices **532** and **538**.

[0112] In a particular embodiment, an upload module **524** may be executable by the MMD processor **504** to receive

multimedia data via the port **518** and to communicate the multimedia data to a multimedia timeline server (not shown). In a particular embodiment, a metadata module **526** may be executable by the MMD processor **504** to generate and associate metadata with one or more received multimedia data objects. In a particular embodiment, a graphical user interface (GUI) module **528** may be executable by the MMD processor **504** to receive data associated with a multimedia timeline and to provide a graphical user interface for a multimedia timeline at one or more display devices via the display interface **514**. In addition, in a particular embodiment, the GUI module **528** may be executable via the MMD processor **504** to be responsive to navigation and selection commands received via the user input device interface **516**. In a particular embodiment, a security module **530** may be executable by the MMD processor **504** to receive user identification information, to authenticate one or more users based on the user information, and to provide one or more levels of access to a multimedia timeline based on the user and the authentication information, in conjunction with one or more security policies established for the multimedia timeline.

[0113] In a particular embodiment, the key device master **532** may include a housing (not shown) that contains a first interface **534** coupled to a first memory **536**. In a particular embodiment, the first interface **534**, the first memory **536**, or any combination thereof, may provide an access key that may include user identification and authentication information to the multimedia device **502**. In a particular embodiment, the key device valet **538** may include a second interface **540** coupled to a second memory **542**. In a particular embodiment, the second interface **540**, the second memory **542**, or any combination thereof, may provide an access key that may include user identification and authentication information to the multimedia device **502**.

[0114] In a particular embodiment, the interfaces **532** and **540** may include one or more active transceivers, one or more passive radio frequency reception and resonance components, or any combination thereof. In a particular embodiment, the interfaces **532** and **540** may include a RFID interface, a wireless USB interface, a Bluetooth interface, an 802.11x interface, any other type of interface, or any combination thereof. In a specific embodiment, the key interface **520** may include one or more apertures defined by a housing of the multimedia device **502**, and the key device master **532** and key device valet **538** may be configured to be insertable into the key interface **520**.

[0115] In a particular embodiment, one or both of the key devices **532** and **538** may include a data port (not shown) coupled to the respective interfaces **532** and **540** to enable data exchange at the key interface **520**. In a particular embodiment, the data port may include any present or future type of data port. In a particular embodiment, the key device master **532** may include an identification of one or more multimedia timelines to which a user associated with the key device master **532** may have a managerial level of access, and the key device valet **538** may include an identification of one or more multimedia timelines to which the key device valet holder may have a reduced level of viewing access, editing access, or any combination thereof.

[0116] In a particular embodiment, one or more of the access key devices **532** and **538** may include one or more biometric sensors (not shown) to enable identification of a user via biometric data. In a particular embodiment, the biometric data may include biometric data based on a fingerprint, a deoxyribo nucleic acid (DNA), an eye retina, an eye iris, a facial pattern, a hand geometry, a voice, a facial thermogram, a signature, a hand vein, a keystroke dynamics, any other biometric data, or any combination thereof.

[0117] In a particular embodiment, the multimedia device **502** may provide full access to upload, edit, and view all multimedia data objects corresponding to a multimedia timeline that may be associated with the key device master **532** when the key device master **532** is coupled to the key interface **520**. The multimedia device **502** may restrict an upload, an editing, or a viewing access to one or more multimedia data objects associated with the same multimedia timeline when the key device valet **538** is coupled to the key interface **520**. Thus, in a specific embodiment, the key device master **532** may be used to create and edit a multimedia timeline, and one or more key device valets **538** may be used to provide restricted access to view only designated portions of the multimedia timeline.

[0118] In a particular embodiment, a user may distribute one or more key devices to enable members of a group to access one or more multimedia timelines. In a particular embodiment, the multimedia timeline may have a multi-tiered security system and the key devices may provide each particular group member with an appropriate level of access to the multimedia timeline for the particular group member. As an illustrative, non-limiting example, a first group member may have unrestricted access to the multimedia timeline while a second group member may have a restricted access to the multimedia timeline. In a particular embodiment, the group may be a family.

[0119] Referring to FIG. **6**, another illustrative embodiment of a system to access a multimedia timeline is depicted and generally designated **600**. A modem **602** may be wirelessly coupled to a user input device (UID) **604**. The user input device **604** may be wirelessly coupled a multimedia device (MMD) **606**.

[0120] In a particular embodiment the modem **602** may be coupled to the user input device **604** via a first wireless network **603**. In a particular embodiment, the first wireless network **603** may be an IEEE 802.11x network. In a particular embodiment, the user input device **604** may be coupled to the multimedia device **606** via a second wireless network **605**. In a particular embodiment, the second wireless network **605** may be a Bluetooth network **605**.

[0121] Referring to FIG. **7**, another illustrative embodiment of a system to access a multimedia timeline is depicted and generally designated **700**. A modem **702** may be wirelessly coupled to a multimedia device (MMD) **704**. The multimedia device **704** may be wirelessly coupled to a user input device (UID) **706**.

[0122] In a particular embodiment, the modem **702** may be coupled to the multimedia device **704** via a first wireless network **703**. In a specific embodiment, the first wireless network **703** may be an 802.11x wireless network. In a particular embodiment, the multimedia device **704** may be coupled to the user input device **706** via a second wireless network **705**. In a particular embodiment, the second wireless network **705** may be a Bluetooth network.

[0123] Referring to FIG. **8**, another illustrative embodiment of a system to access a multimedia timeline is depicted and generally designated **800**. A modem **802** may be wirelessly coupled to a key device **804**. The key device **804** may be coupled to a multimedia device (MMD) **806**. The multimedia device may be wirelessly coupled to a user input device (UID)

808. In a specific embodiment, the key device **804** may be a key device master. In another specific embodiment, the key device **804** may be a key device valet.

[0124] In a particular embodiment, the modem **802** may wirelessly coupled to the key device **804** via a first wireless network **803**. In a particular embodiment, the key device **804** may be physically coupled to the multimedia device **806** via a connection **805**. In a particular embodiment, the user input device **808** may be wirelessly coupled to the key device **804** via a second wireless network **807**.

[0125] Referring to FIG. **9**, another illustrative embodiment of a system to access a multimedia timeline is depicted and generally designated **900**. A computer **906** communicates with a network **902** via a modem **904**. A dongle **910** may be coupled to the computer **906** via a Universal Serial Bus (USB) port **908**.

[0126] In a particular embodiment, the dongle **910** may include a memory **912**, a processor **914**, and a transceiver **916**. In a particular embodiment, the dongle **910** can wirelessly communicate with a multimedia device (not shown) to provide access for the multimedia device to the network **902** via the computer **906** and the modem **904**. In a particular embodiment, the dongle **910** may provide wireless access to only one or more designated multimedia devices, and may restrict wireless access to all non-designated devices. In a specific embodiment, the dongle **910** may provide a dedicated wireless access point for a single designated multimedia device to send and receive multimedia timeline data via the network **902**.

[0127] Referring to FIG. **10**, a particular illustrative embodiment of a system to wirelessly communicate multimedia timeline data is depicted and generally designated **1000**. A personal computer **1006** and a dongle **1008** are in communication with a network **1002** via a modem **1004**. The dongle **1008** may be coupled to the modem **1004** via a connector **1020** to a network interface **1012**. The dongle **1008** may include a processor **1014**, a memory **1016**, and a transceiver **1018**.

[0128] In a particular embodiment, the dongle **1008** can wirelessly communicate with a multimedia device (not shown) to provide access for the multimedia device to the network **1002** via the modem **1004**. In a particular embodiment, the connector **1020** may enable communications without using the personal computer **1006** via a direct connection to the modem **1004**, an access point (not shown), a gateway (not shown), a router (not shown), a switch (not shown), or any combination thereof. In a particular embodiment, the dongle **1008** may be preconfigured to establish a wireless network that is exclusive to one or more authorized multimedia devices and to directly connect via the connector **1020** without requiring a software installation or settings configured by a user.

[0129] In a particular embodiment, the dongle **1008** may provide wireless access to only one or more designated multimedia devices, and may restrict wireless access to all non-designated devices. In a specific embodiment, the dongle **1008** may provide a dedicated wireless access point for a single designated multimedia device to send and receive multimedia timeline data via the network **1002**. In a particular embodiment, the dongle **1008** may include an indicator (not shown) that identifies one or more designated multimedia devices as authorized devices. In a particular embodiment, the identifier may be hardwired to the processor **1014**.

[0130] In a particular embodiment, the dongle **1008** may provide a wireless network to communicate data associated with a multimedia timeline between a one or more multimedia devices and the network **1002**. In a particular embodiment, the wireless network may, enable IEEE 802.11x protocol communication via the wireless transceiver **1018**. In a particular embodiment, the dongle **1008** may receive requests from a multimedia device and send the requests to a timeline server (not shown) coupled to the network **1002**. In a particular embodiment, the dongle **1008** may be configured to exclusively communicate multimedia timeline data, to exclusively enable wireless communications with one or more authorized multimedia devices, to exclusively enable wireline communication with one or more timeline servers, or any combination thereof.

[0131] In a particular embodiment, the dongle **1008** may be configured to determine a sender, an intended recipient, or any combination thereof, of received wireless messages. In a particular embodiment, the processor **1014** may be configured to filter wireless messages received at the transceiver to determine whether to send the wireless messages to the network **1002** via the network interface **1012**. In a particular embodiment, the dongle **1008** may be configured to only send messages to the network **1002** that are received from an authorized multimedia device, addressed to a timeline server, or any combination thereof.

[0132] In a particular embodiment, the processor **1014** may be configured to filter messages received at via the network interface **1012** to determine whether to send the messages via the transceiver **1018**. In a particular embodiment, the dongle **1008** may be configured to only send messages received from the network **1002** that are received from a timeline server, addressed to an authorized multimedia device, or any combination thereof.

[0133] Referring to FIG. **11**, another illustrative embodiment of a system to access a multimedia timeline is depicted and generally designated **1100**. The system **1100** includes a multimedia device **1102** and a multimedia data collection and storage unit **1104**.

[0134] In a particular embodiment, the multimedia device **1102** may have first socket **1106** configured to receive a portion of the multimedia collection and storage device **1104**. The first socket **1106** may include one or more electrical contacts to facilitate a transfer of multimedia data stored in the multimedia data collection and storage unit **1104** to an internal memory (not shown) of the multimedia device **1102**. In a particular embodiment, the first socket **1106** may include a charging device or circuit (not shown) to charge one or more rechargeable batteries (not shown) of the multimedia collection and storage unit **1104** when, seated in the first socket **1106**. In a particular embodiment, the multimedia device **1102** may further include a second socket **1114** to enable charging of one or more rechargeable batteries of a user input device (not shown). In a particular embodiment, the multimedia device **1102** may have two or more electrical contacts (not shown) to receive a user device. In a particular embodiment, the multimedia device **1102** may inductively charge a battery of a user device.

[0135] In a particular embodiment, the multimedia content capture and storage device **1104** may include an interface portion **1110** configured to be insertable into the first socket **1106** of the multimedia device **1102**. In a particular embodiment, the multimedia collection and storage device **1104** may include a microphone **1112** to capture audio information and

may store audio information at an internal memory (not shown). In a particular embodiment, the multimedia data capture and storage device **1104** may include one or more controls **1108** to cause the multimedia data capture and storage device **1104** to transmit navigation and selection commands associated with a multimedia timeline to the multimedia device **1102**.

[0136] Referring to FIG. **12**, another illustrative embodiment of a device that may be used to interact with a multimedia timelines user interface is depicted and generally designated **1200**. In a particular embodiment, the user, input device **1200** may wirelessly transmit commands associated with navigation and selection of a multimedia timeline graphical user interface (GUI).

[0137] The user input device **1200** includes a first control **1202**. In a particular embodiment, actuation of the first control **1202** may cause the user input device **1200** to generate navigation commands for linear navigation through chronological data of a multimedia timeline. In a specific embodiment, the first control **1202** may be actuated by rotating the first control **1202** relative to another control **1204**, **1206**, **1208**, or any combination thereof, of the user input device **1200**.

[0138] The user input device **1200** includes a second control **1204**. In a particular embodiment, actuation of the second control **1204** may cause the user input device **1200** to generate a selection command to select a currently indicated multimedia data object at a multimedia timeline GUI. In a specific embodiment, the second control **1204** may include a button, touchscreen, or other pressure-sensitive control.

[0139] In a particular embodiment, the user input device **1200** may include a third control **1206** and a fourth control **1208**. In a particular embodiment, actuation of the third control **1206** or the fourth control **1208** may cause the user input device **1200** to generate one or more commands to interact with a multimedia timeline GUI. In a specific embodiment, the third control **1206** may be a "menu" control that causes the user input device **1200** to transmit an instruction to display a list of menu options of a multimedia timeline GUI. In another specific embodiment, the fourth control may be a "favorites" control that causes the user input device **1200** to transmit an instruction to display a user-defined list or selection of multimedia data objects associated with a multimedia timeline.

[0140] Referring to FIG. **13**, a particular illustrative embodiment of data structures associated with multimedia timelines is depicted and generally designated **1300**. A first data structure **1301** may be associated with a first multimedia timeline. A second data structure **1350** may be associated with a second multimedia timeline. A first data object **1320** may be associated with first object metadata, such as a first object reference element **1322**. A second data object **1324** may be associated with second object metadata, such as a second object reference element **1326** and a second object thumbnail **1328**. A third data object **1330** may be associated with third object metadata, such as a third object reference element **1332** and a third object thumbnail **1334**. A fourth data object **1336** may be associated with fourth object metadata, such as a fourth object reference element **1338** and a fourth thumbnail **1340**.

[0141] The first data structure **1302** may include first header data **1302** and a first representative group of timeline metadata elements, such as linking elements **1304**, **1306**, **1308**, **1310**, **1312**, **1314**, and **1316**. In a particular embodiment, the first header data **1302** may include a timeline identification (ID) that uniquely or semi-uniquely identifies the first multimedia timeline. In a particular embodiment, the first header data **1302** may include a first user identification corresponding to one or more users of the first multimedia timeline. In a specific embodiment, the first header data **1302** may indicate one or more access levels associated with each user of the first multimedia timeline, such as managerial access, editorial access, restricted editorial access, viewing access, restricted viewing access, other access levels, or any combination thereof.

[0142] In a particular embodiment, the first group of linking elements **1304-1316** may correspond to a first chronologically-ordered list of metadata. In a particular embodiment, each of the first group of linking elements **1304-1316** may include information identifying a chronological period or date reference. In a particular embodiment, each of the first group of linking elements **1304-1316** may include information identifying the prior linking element and the next linking element of the first multimedia timeline. In a specific embodiment, the linking elements **1304-1316** may be a linked list.

[0143] In a particular embodiment, each of the first group of linking elements **1304-1316** may include information, such as links, pointers, or other references, identifying one or more data objects **1320**, **1324**, **1330**, and **1336**, one or more object reference elements **1322**, **1326**, **1332**, and **1338**, one or more thumbnails **1328**, **1334**, **1340**, or any combination thereof, that are associated with a chronological period or date reference of the linking element **1304**, **1306**, **1308**, **1310**, **1312**, **1314**, or **1316**. For example, linking element **1304** may include information identifying the second object reference element **1326**, depicted in FIG. **14** as a line connecting metadata element **1304** to the second object reference element **1326**. As another example, linking element **1312** may include information identifying the third object reference element **1332** and the fourth object reference element **1338**. In a specific embodiment, one or more of the first group of linking elements **1304-1316** may not identify any associated data objects **1320**, **1324**, **1330**, and **1336**, object reference elements **1322**, **1326**, **1332**, and **1338**, or thumbnails **1328**, **1334**, and **1340**. As an example, linking elements **1306-1310** are not associated with any data objects **1320**, **1324**, **1330**, or **1336**, object reference elements **1322**, **1326**, **1332**, or **1338**, or thumbnails **1328**, **1334**, or **1340**.

[0144] In a particular embodiment, the first data structure **1301** may be configured to be navigable and editable by a processor. A processor may locate the first data structure via the first header data **1302**. A processor may navigate the linking elements **1304-1316** to find a position or location associated with a particular date reference by selecting a linking element, comparing a date reference included in the linking element to the particular date reference, and selecting a previous or next linking element based on the comparison. Timeline data, such as a data object, an object reference element, a linking element, or any combination thereof, may thus be located, added, edited, retrieved, deleted, or any combination thereof, based on the particular date reference and the chronological ordering of the linking elements **1304-1316**.

[0145] In a particular embodiment, the second data structure **1350** may include second header data **1352** and a second representative group of linking elements **1354**, **1356**, **1358**, **1360**, and **1362**. In a particular embodiment, the second header data **1352** may include a second timeline identification that uniquely or semi-uniquely identifies the second multi-

media timeline. In a particular embodiment, the second header data **1302** may include a second user identification corresponding to one or more users of the second multimedia timeline. In a specific embodiment, the second header data **1302** may indicate one or more access levels associated with each user of the second multimedia timeline, such as managerial access, editorial access, restricted editorial access, viewing access, restricted viewing access, other access levels, or any combination thereof.

[0146] In a particular embodiment, the second group of linking elements **1354-1362** may correspond to a second chronologically-ordered list of metadata. In a particular embodiment, each of the second group of linking elements **1354-1362** may include information identifying a chronological period or date reference. In a particular embodiment, each of the second group of linking elements **1354-1362** may include information identifying the prior linking element and the next linking element of the second multimedia timeline.

[0147] In a particular embodiment, each of the second group of linking elements **1354-1362** may include information identifying one or more data objects **1320**, **1324**, **1330**, and **1336**, one or more object reference elements **1322**, **1326**, **1332**, and **1338**, one or more thumbnails **1328**, **1334**, **1340**, or any combination thereof, that are associated with the chronological period or date reference of the linking element **1354**, **1356**, **1358**, **1360**, or **1362**. For example, linking element **1354** may include information identifying the first object reference element **1322**. In a specific embodiment, one or more of the second group of linking elements **1354-1362** may not identify any associated data objects **1320**, **1324**, **1330**, and **1336**, object reference elements **1322**, **1326**, **1332**, and **1338**, or thumbnails **1328**, **1334**, and **1340**. As an example, linking elements **1360** and **1362** are not associated with any data objects **1320**, **1324**, **1330**, or **1336**, object reference elements **1322**, **1326**, **1332**, or **1338**, or thumbnails **1328**, **1334**, or **1340**.

[0148] In a particular embodiment, each data object **1320**, **1324**, **1330**, and **1336** may include multimedia data that is associated with one or more multimedia timelines. In a particular embodiment, the data objects **1320**, **1324**, **1330**, and **1336** may include video data, video files, audio data, audio files, image data, image files, word processing documents, emails, markup language data or files, any other type of multimedia data or file, or any combination thereof.

[0149] In a particular embodiment, each data object **1320**, **1324**, **1330**, and **1336** may be associated with one or more of the object reference elements **1322**, **1326**, **1332**, and **1338**. In a particular embodiment, each object reference element **1322**, **1326**, **1332**, and **1338** may include information regarding an associated data object **1320**, **1324**, **1330**, or **1336**, such as multimedia type, file type, file size or memory requirements, a memory location, a date reference, any other information corresponding to the associated data object **1320**, **1324**, **1330**, or **1336**, or any combination thereof. In a specific embodiment, a date reference may indicate a date, a time, or any combination thereof, corresponding to a creation, storing, or modifying of one or more data objects **1320**, **1324**, **1330**, a user-specified date, a user-specified time, or any combination thereof.

[0150] In a particular embodiment, each of the object reference elements **1322**, **1326**, **1332**, and **1338** may include one or more links, pointers, or other references indicating one or more multimedia timelines or multimedia linking elements referencing the object reference element **1322**, **1326**, **1332**, or **1338**. For example, the second object reference element **1326** may include information indicating the linking element **1304** corresponding to the first multimedia timeline and the linking element **1356** corresponding to the second multimedia timeline, in addition to information indicating the first object reference element **1322** corresponding to the first data object **1320**. As another example, the third object reference element **1332** may include information indicating the linking element **1312**, the third data object **1330**, the third thumbnail **1334**, and the fourth data object **1336**.

[0151] In a particular embodiment, each of the object reference elements **1322**, **1326**, **1332**, and **1338** may also include one or more links, pointers, or other references indicating one or more thumbnails **1328**, **1334**, and **1340**. In a particular embodiment, each of the thumbnails **1328**, **1334**, and **1340** contains efficiently transmittable data representing an associated data object **1320**, **1324**, **1330**, or **1336**. As an illustrative, non-limiting example, a thumbnail associated with an image may include a low-resolution version of the associated image. As another illustrative, non-limiting example, a thumbnail associated with audio data may include a sample of the audio data. As yet another illustrative, non-limiting example, a thumbnail associated with video data may include one or more low-resolution images corresponding to frames of the video data.

[0152] In a particular embodiment, a request for multimedia timeline data corresponding to a particular chronological period of the first multimedia timeline may be received at a multimedia timeline server that includes the data structures illustrated in FIG. **13**. In a particular embodiment, a copy of the entire data structure **1301** and all associated data objects **1320**, **1324**, **1330**, and **1336**, all object reference elements **1322**, **1326**, **1332**, and **1338**, and all thumbnails **1328**, **1334**, and **1340** may be sent to the requestor.

[0153] In another embodiment, only a portion of the timeline metadata corresponding to the particular chronological period, such as the chronologically ordered group of linking elements **1390**, may be sent to the requestor. In a particular embodiment, a copy of object reference elements and thumbnails associated with the group of linking elements **1390**, such as object reference elements **1332** and **1338** and thumbnails **1334** and **1340**, may also be sent to the requester. In a particular embodiment, copies of data object **1330** and **1336** associated with the group of linking **1390** may be sent when a specific request for the respective data object **1330** or **1336** is received. Thus, system resources such as network bandwidth may be conserved by sending a portion of the multimedia timeline data in response to a request.

[0154] Referring to FIG. **14**, a particular illustrative embodiment of an interface to display a multimedia timeline is depicted and generally designated **1400**. A daily view **1402**, a weekly view **1404**, and a monthly view **1406** each provide a respective navigable and selectable interface for multimedia timeline data corresponding to a respective chronological period.

[0155] In a particular embodiment, the daily view **1402** may include multiple chronological indicators, such as representative chronological indicators **1410**, **1412**, and **1416**. In a particular embodiment, each of the chronological indicators **1410**, **1412**, and **1416** indicates a time period to which at least one multimedia data object of a multimedia timeline may be associated.

[0156] In a particular embodiment, each chronological indicator **1410**, **1412**, and **1416** may represent an hour of a

day that is associated with the daily view **1402**. The chronological indicators **1410-1416** may indicate whether any multimedia data objects are associated with the respective hour, such as by a color scheme, a shading scheme, a textual indication, a numerical indication, a graphical indication, any other indication, or any combination thereof.

[0157] In another particular embodiment, each chronological indicator **1410-1416** may represent a single multimedia data object. As an illustrative, non-limiting example, if ten multimedia data objects are associated with a day corresponding to the daily view **1402**, then ten chronological indicators may be displayed. The chronological indicators may indicate any type of data object. As an illustrative, non-limiting example, a first indicator may indicate a data object that includes audio data, a second indicator may indicate a data object that includes video data, and a third indicator may indicate a data object that includes text data.

[0158] The daily view **1402** may also include a display window **1418** that may have a viewing region **1420** and at least one selectable control **1422**. In a particular embodiment, the viewing region **1420** and the selectable control **1422** may provide a consistent interface appearance and user interactivity for all multimedia data types. As an illustrative, non-limiting example, an audio file, a digital image, and a digital video file may be presented in a uniform manner via the viewing region **1420** and with a consistent look and operation of the selectable control **1422**.

[0159] The daily level interface **1402** may also include a content description indicator **1424**. In a particular embodiment, the content description indicator **1424** may include a title or other text associated with the multimedia content displayed at the display window **1420**, a date associated with the multimedia content, an indicator of the type of multimedia content, or any combination thereof.

[0160] In the particular illustrative embodiment of the daily level interface **1402** of FIG. **14**, a digital image may be displayed at the display region **1420**. The content description indicator **1424** provides a title associated with the digital image in the display region **1420** and an icon of a camera as a multimedia content type indicator. Furthermore, the display control **1422** enables a recording of an audio annotation to be associated with the digital image displayed at the display region **1420**. In a specific embodiment, selection of the control **1422** can cause an activation of a microphone for recording, such as the microphone **1418** of the user input device **400**. In a particular embodiment, selection of the control **1422** may cause a wireless signal to be sent to a user input device to activate a microphone and wireless data that includes an annotation to be received from the user input device.

[0161] In a particular embodiment, the weekly view **1404** may include representative groups **1442**, **1444**, **1446**, and **1448** of one or more chronological indicators, such as the representative chronological indicator **1450**. In a particular embodiment, the weekly view **1404** may include a weekly view description indicator **1440** that may indicate a chronological period currently associated with the weekly view **1404**. A display window **1452** may include a viewing region **1454** to provide or display currently selected multimedia content. In the illustrative embodiment of FIG. **14**, the currently selected multimedia content of the weekly view **1404** may be associated with the selected chronological indicator **1450**.

[0162] In a particular embodiment, each of the groups **1442**, **1444**, **1446**, and **1448** may represent a respective day of a week. As an illustrative, non-limiting example, the first representative group **1442** may include chronological indicators associated with a first day of a week associated with the weekly view **1404**, such as a Sunday. The second representative group **1444** may include chronological indicators associated with a next sequential day, such as a Monday. In a particular embodiment, each group **1442-1448** may include a variable number of chronological indicators, each chronological indicator indicating one or more multimedia objects associated with a time period during the day associated with the chronological indicator. In a particular embodiment, a thumbnail object can be depicted with each group **1442-1448** to represent at least one multimedia data object associated with the respective day.

[0163] In a particular embodiment, the monthly view **1406** may include monthly view description indicators **1460**, such as month designators and a year designator. The yearly level interface **1406** may include one or more groups of chronological indicators associated with multimedia content, such as representative groups **1462**, **1464**, and **1466**. In a particular embodiment, each group **1462-1466** may represent a month of a designated year. In addition, each group may contain a header providing one or more thumbnail objects representative of content associated with the respective month. A slider control **1470** may be used to navigate among months associated with the multimedia timeline during the designated year. In a particular embodiment, a slider control may also be included in one or more of the daily view **1402** and the weekly view **1404**.

[0164] In a particular embodiment, a currently selected group or portion of a group of chronological indicators may be highlighted or otherwise distinctly displayed, such as the representative group of chronological indicators **1468**. In a specific embodiment, the selected group of chronological indicators **1468** may correspond to a predetermined number of chronological indicators. In another specific embodiment, the selected group of chronological indicators **1468** may correspond to a calendar week or other predetermined chronological period. In yet another specific embodiment, the selected group of chronological indicators **1468** may correspond to a predetermined portion of the yearly view displayed at a display device, such as one-eighth of the displayed portion.

[0165] During operation, a user of the multimedia timeline graphical user interface **1400** may begin navigating the multimedia timeline using the yearly view **1406**. In a particular embodiment, the user may chronologically navigate to a particular month and decide to view multimedia content associated with the particular month. For example, a user may see a thumbnail image associated with the particular month and may decide to visit the time period associated with the thumbnail image. In a particular embodiment, a user may navigate to a portion of the month, such as a particular week, and may press a selection control of a user input device to navigate to the weekly view **1404**. In another particular embodiment, a user may navigate to a weekly view **1404** corresponding to the selected group of chronological indicators **1468** by actuating a "zoom in" control of a user interface device.

[0166] In a particular embodiment, a user may chronologically navigate through the weekly view **1404** by scrolling through the groups of chronological indicators, such as the representative groups **1442-1448**, to locate a group of chronological indicators corresponding to a particular day. In a particular embodiment, a user may navigate through the chro-

nological indicators of the weekly view and view thumbnails provided in the group headers. In a particular embodiment, a thumbnail provided in each group header may change in response to a user navigation through the group, so that the group header reflects multimedia content associated with a currently selected day. For example, a user may navigate through the display **1404** to the highlighted chronological indicator **1450**, and be provided a thumbnail object in the display region **1454** that corresponds to the chronological period associated with the chronological indicator **1450**. In a particular embodiment, a user may navigate to the daily view **1402** corresponding to the selected chronological indicator **1450** by actuating a selection control of a user input device. In another particular embodiment, a user may navigate to the daily view **1402** corresponding to the selected chronological indicator **1450** by actuating a "zoom in" control of a user interface device.

[0167] In a particular embodiment, a user may chronologically navigate through the daily view **1402** by scrolling though the chronological indicators, such as the representative chronological indicators **1410-1416**. In a particular embodiment, a user may navigate to a particular chronological indicator and actuate a selection control of a user input device to launch the display window **1418** with the multimedia content corresponding to the selected chronological indicator provided at the viewing region **1420**. In another embodiment, the display window **1418** may be perpetually displayed at the daily view **1402**, and the multimedia content provided at the viewing region **1420** may change to reflect multimedia content associated with a currently selected chronological indicator.

[0168] It should be clearly understood that any and all terms used throughout the present disclosure, such as "display window," "thumbnail," "viewing region," or any other terminology or descriptions that may connote any particular media type, are used solely for convenience, and should not be construed to limit any aspect of the present disclosure to visually presentable multimedia content. Any such terms should be construed to encompass any and all media-specific analogs to visual elements. As an illustrative, non-limiting example, a "thumbnail" for an audio file may include a sample of the audio file, and a "display" of the audio file thumbnail may include an audible presentation of the sample. The present disclosure specifically contemplates all known media types and their successors, including, but not limited to, audio content, visual content, tactile content, and olfactory content.

[0169] Referring to FIG. **15**, another illustrative embodiment of an interface to display a multimedia timeline is depicted and generally designated **1500**. A multimedia content view **1502** may include a display window **1512** that may have a viewing region **1514**. In a particular embodiment, a content description indicator **1510** provides a description of content presented via the display window **1512**. In a particular embodiment, the multimedia content view **1502** may include selectable controls that enable a user to edit a multimedia timeline or to share multimedia data from a multimedia timeline with others. In a specific embodiment, the multimedia content view **1502** may include a "share with friends" control **1516**, an "add to album" control **1518**, a "remove from library" control **1520**, and a "change view" control **1522**.

[0170] In a specific embodiment, selection of the "share with friends" control **1516** may enable a user to send or otherwise make available a multimedia data object presented at the display window **1512** to one or more recipients. In a specific embodiment, selection of the "share with friends" control **1516** may generate a friends and family view **1504**. In a particular embodiment, the friends and family view **1504** may include multiple recipient indicators, such as the representative recipient indicator **1530**, that have been pre-determined by a user of a multimedia timeline to be potential recipients of multimedia data.

[0171] In a particular embodiment, a second friends and family view **1506** may be generated in response to a selection of one or more recipients. The second friends and family view **1506** may include a prompt window **1550** with selectable controls to enable a transmission of multimedia data to the selected recipients. In a specific embodiment, a first selectable control **1552** may enable a user to determine that a link to the selected multimedia data object is sent. In a specific embodiment, a second selectable control **1554** may enable a user to determine that the multimedia data object is sent in a visual format as a printed photograph or other printed material. In a specific embodiment, a third selectable control **1556** may enable a user to cancel a transmission of multimedia data to the designated recipient.

[0172] In a specific embodiment, selection of the "add to album" control **1518** of the multimedia content view **1502** may enable a user to add a multimedia data object presented at the display window **1512** to one or more collections of multimedia data designated as multimedia albums. In a specific embodiment, the multimedia albums may include data generally associated with a particular event, person, or other relational context. As an illustrative, non-limiting example, an album may include a logical or physical grouping of multimedia data associated with a vacation, a community event, a wedding, any other particular event or collection or events, or any combination thereof.

[0173] In a specific embodiment, selection of the "remove from library" control **1520** of the multimedia content view **1502** may enable a user to remove a multimedia data object presented at the display window **1512** from a multimedia timeline. In a specific embodiment, all data associated with the removed multimedia object, such as metadata and thumbnails, may also be removed automatically by selection of the "remove from library" control **1520**.

[0174] In a specific embodiment, selection of the "change view" control **1522** of the multimedia content view **1502** may enable a user to navigate to a different view of a multimedia timeline graphical user interface. In a specific embodiment, selection of the "change of view" control **1522** may cause selectable menu of available views to be provided. As an illustrative, non-limiting example, available views may include a yearly view, a weekly view, a daily view, any other view, or any combination thereof.

[0175] Referring to FIG. **16**, another illustrative embodiment of an interface to display a multimedia timeline is depicted and generally designated **1600**. An album view **1602** may include multiple representative album indicators **1610**, **1612**, **1614**, **1616**, **1618**, and **1620**. In a particular embodiment, each of the representative indicators **1610-1620** may include a title, a description, a representative thumbnail, and one or more chronological indicators corresponding to multimedia content associated with the respective album. In a particular embodiment, the chronological indicators, such as representative chronological indicators **1622**, may each indicate an individual multimedia data object that may be associated with a particular event, user, or other criteria, to gen-

erate a logically related subset of multimedia timeline content. In a particular embodiment, selectable controls **1624**, **1626**, **1628**, and **1630** may enable a user to perform various functions related editing and viewing albums, such as adding or associating multimedia timeline data objects to one or more albums.

[0176] In a particular embodiment, a second album view **1604** may be generated in response to a selection of a control **1624**, **1626**, **1628**, or **1630** to add multimedia content to an album. In a particular embodiment, the second album view **1604** may include a prompt window **1650** that may include a first selectable control **1652** to add selected multimedia data to a designated album. In a particular embodiment, the prompt window **1650** may include a second selectable album control **1654** to cancel adding multimedia data to a designated album.

[0177] Referring to FIG. **17**, another illustrative embodiment of an interface to display a multimedia timeline is depicted and generally designated **1700**. An album view **1702** may include multiple chronological indicators corresponding to multimedia data objects associated with a particular album. In a particular embodiment, the album level view **1702** may also include multiple selectable controls, including a "change view" control **1710**.

[0178] In a particular embodiment, a "view selection" view **1704** may be generated in response to a selection of the "change view" control **1710**. The "view selection" view **1704** may include multiple selectable controls to enable a user to specify a multimedia timeline presentation format, such as a "library" control **1712**, an "albums" control **1714**, and a "media type" control **1716**.

[0179] In a particular embodiment, a media type view **1706** may be generated in response to a selection of the "media type" control **1716**. The media type view **1706** may include multiple selectable controls to enable a selection of a particular media type, such as a "photo" control **1720**, a "movie" control **1722**, an "audio" control **1724** and a "text" control **1726**.

[0180] In a particular embodiment, a movie-only view **1708** may be generated in response to a selection of the "movie" control **1722**. In a particular embodiment, the movie-only view **1708** depicts only chronological indicators **1732** associated with movie data objects. The movie-only view **1708** may include a display window **1734** with a viewing region **1736** and a set of selectable media controls **1738**. The movie-only view **1708** may also include a content description indicator **1730**. In a particular embodiment, the content description indicator **1730** may include a title, a date associated with the displayed multimedia content, an icon indicating a media type of the displayed multimedia content, other information, or any combination thereof.

[0181] Referring to FIG. **18**, another illustrative embodiment of an interface to display a multimedia timeline is depicted and generally designated **1800**. A first view **1802** may include a content description indicator **1810** and a multimedia window **1812** that may have a display region **1814** and a selectable record control **1816**. In a particular embodiment, the record control **1816** can enable recording of audio information associated with a multimedia object provided at the display region **1814**.

[0182] In a particular embodiment, a selection of the record control **1816** may cause an audio recording interface **1804** that may have selectable audio controls **1830** to be displayed. In a particular embodiment, the audio controls **1830** may include a save control, a record control, a play/pause control, and a delete control.

[0183] In a particular embodiment, when a selected multimedia object may have an associated audio recording, an "audio available" view **1806** can provide a selectable audio playback control **1840**. In a particular embodiment, the audio playback control **1840** may enable a playback of audio information associated with a displayed multimedia object.

[0184] In a particular embodiment, a user of a multimedia timeline may navigate to a particular multimedia object of a multimedia timeline and may record audio information to be stored in association with the multimedia object. For example, a user may record audio content related to thoughts or memories corresponding to the multimedia object, such as a description of a photograph or a historical background of a document. A user having access to the multimedia timeline may cause the recorded audio information to be played by selecting the audio playback control **1840**.

[0185] Referring to FIG. **19**, an illustrative embodiment of an interface to provide security for a multimedia timeline is depicted and generally designated **1900**. In a particular embodiment, the interface **1900** may be a security interface that provides multiple indicators **1902** corresponding to multimedia objects associated with a particular multimedia timeline. In a particular embodiment, each indicator **1902** can include a thumbnail corresponding to an associated multimedia object. In a particular embodiment, the indicators **1902** may be navigable and selectable by a user requesting access to a multimedia timeline. A representative selected indicator **1904** may be displayed in a manner distinguishable from non-selected indicators. In a particular embodiment, selection of a control **1906** may indicate that selection of one or more selected indicators **1904** is complete.

[0186] In a particular embodiment, a user having managerial access to a particular multimedia timeline may select one or more multimedia objects of the particular multimedia timeline for a security code or key. In a particular embodiment, at least a portion of a security code for a multimedia timeline may be selected by an automated random or pseudo-random selection process, such as by a computer. In a particular embodiment, the indicators **1902** may represent one or more of the security code multimedia objects. In a particular embodiment, the indicators **1902** may also indicate one or more non-security code multimedia objects of the particular multimedia timeline or from other multimedia timelines. Access to the particular multimedia timeline may be restricted based on a user's selection of one or more indicators **1902**.

[0187] In a particular embodiment, a security code may be a single multimedia object indicated by an indicator **1904**. A user selecting a correct indicator **1904** may thus be granted access to the timeline. In another embodiment, a multimedia timeline may include a multi-tiered security access system, and a level of security access can be determined based on one or more selected indicators, an order of selection of indicators, a number of correct selected indicators, other combinations of selected indicators or indicator selection order, or any combination thereof.

[0188] In a specific embodiment, a user requesting access to a multimedia timeline may be prompted to traverse multiple security interfaces **1900**. In a non-limiting, illustrative example, three separate security interfaces may be sequentially presented to a user desiring access to a multimedia

timeline. Access to a multimedia timeline, or a level of access in a multi-tiered security access system, may be determined based on indicator selections at the three security interfaces.

[0189] In a particular embodiment, a graphical user interface may include a first screen having a first set of multimedia items provided to obtain access to a multimedia timeline. The first screen may have a first selection button to select a first selection. The first selection may include one or more multimedia items from the first set of multimedia items. The first screen may also have a first control button to indicate that the first selection is complete. Access to the multimedia timeline may be granted when the first selection matches a first key.

[0190] In a particular embodiment, the graphical user interface may include a second screen that has a second set of multimedia items provided to obtain access to the multimedia timeline. The second screen may have a second selection button to select a second selection. The second selection may include one or more multimedia items from the second set of multimedia items. The second screen may have a second control button to indicate that the second selection is complete. Access to the multimedia timeline may be granted when the first selection matches the first key and the second selection matches a second key.

[0191] Referring to FIG. **20**, a particular illustrative embodiment of a method of providing a multimedia timeline is depicted and generally designated **2000**. In a particular embodiment, a multimedia timeline may be generated at a computer, the multimedia timeline including a data structure to arrange the first set of data objects in a chronological order, at **2001**. In a particular embodiment, the computer may be the computer **312** of FIG. **3**, and the data structure may be the first data structure **1301** of FIG. **13**. In a particular embodiment, a security mechanism may be provided to enable an authorized user to add content to the multimedia timeline. In a particular embodiment, the security mechanism may include a security interface, such as the interface **1900** of FIG. **19**.

[0192] A selection of a first set of data objects to add to the multimedia timeline may be received at the computer, where the first set of data objects corresponds to a life event, at **2002**. In a particular embodiment, the selection may be received via a drag and drop sequence at a user interface. The drag and drop sequence may include positioning an icon corresponding to a data object proximate to an icon representing the multimedia timeline. In a particular embodiment, the first set of data objects may include at least one data object that has at least one media type selected from all media types that are storable at a personal computer. In a particular embodiment, the at least one data object may include at least one of an audio media type, a video media type, a document and an email.

[0193] In a particular embodiment, the life event may include at least a portion of a person's life. In a particular embodiment, the life event may begin substantially at the person's birth and may include substantially all of the person's life. In a particular embodiment, the life event may be a wedding, a marriage, an anniversary, a graduation, a birthday, or a vacation. In a particular embodiment, the multimedia timeline may include autobiographical content.

[0194] In a particular embodiment, first metadata may be generated at the computer, the first metadata including a date reference for each data object of the first set of data objects, at **2004**. In a particular embodiment, at least one date reference may be modified via a user interface, at **2006**.

[0195] The first set of data objects may be sent to a server to be included in the multimedia timeline, where the multimedia timeline is configured to be accessible for viewing in a timeline format, at **2008**. In a particular embodiment, the first metadata may be sent to the server to add each of the data objects to the multimedia timeline in a chronological order based on the date reference, at **2010**. In a particular embodiment, the server may be a dedicated multimedia timeline server that stores multimedia timeline data at a dedicated multimedia timeline data center. In a particular embodiment, the first set of data objects may be retrievable from the server at a multimedia device when an access key device associated with the multimedia timeline is coupled to the multimedia device.

[0196] In a particular embodiment, a plurality of multimedia devices may be in communication with the server. Each multimedia device of the plurality of multimedia devices may be configured to enable uploading to the server multimedia timeline data when coupled to the access key device. Each multimedia device of the plurality of multimedia devices may be configured to enable editing the multimedia timeline when coupled to the access key device. In a particular embodiment, the server may be the timeline server **302** of FIG. **3**.

[0197] In a particular embodiment, at least one data object may be detected at an external device that is accessible to the computer, at **2012**. In a particular embodiment, the external device may be a personal digital assistant (PDA), an audio player, an audio recorder, a video player, a video recorder, a phone, any other media capture or storage device, or any combination thereof.

[0198] In a particular embodiment, a selectable menu of data objects that are detectable at the external device when the external device is coupled to the computer may be provided, at **2014**. In a particular embodiment, the selectable menu may be provided automatically when the external device is detected by the computer. In a particular embodiment, a selection of at least one data object to include in the multimedia timeline may be received, at **2016**.

[0199] In a particular embodiment, a second set of data objects may be sent to the server to be included in the multimedia timeline, where the second set of data objects includes the at least one data object, at **2018**. The first set of data objects and the second set of data objects may each include various types of multimedia content. For example, in a particular embodiment, the second set of data objects may include a video file, an audio file, or an image file, and the first set of data objects may include at least one data object that is not a video file, an audio file, or an image file.

[0200] In a particular embodiment, an annotation may be received at the computer. The annotation may correspond to a particular data object of the first set of data objects. In a particular embodiment, the annotation may be sent to the server to associate the annotation with the particular data object in connection with the multimedia timeline. In a particular embodiment, the annotation may include at least one of audio data, video data, and text data.

[0201] Referring to FIG. **21**, another illustrative embodiment of a method of providing a multimedia timeline is depicted and generally designated **2100**. A first data object may be received at a server, at **2102**. The server may store and provide multiple multimedia timelines associated with multiple users. In a particular embodiment, the server may be the timeline server **302** of FIG. **3**.

[0202] The first data object may be added to a first multimedia timeline that corresponds to a first life event of a first user, at **2104**. The first multimedia timeline may include data

objects having various media types. For example, in a particular embodiment, the first data object may include audio data, and another data object of the first multimedia timeline may not include audio data.

[0203] In a particular embodiment, a second data object may be received from a first multimedia device, at **2106**. In a particular embodiment, the multimedia device may be a dedicated device to provide multimedia timeline sessions, such as the multimedia device **306** of FIG. **3**. In a particular embodiment, the second data object may be added to the first multimedia timeline, at **2108**.

[0204] A first request for at least a portion of the first multimedia timeline may be received from the first multimedia device coupled to the server via a network, at **2110**. In a particular embodiment, the first request may include user identification information to selectively provide playback of the first multimedia timeline. In a particular embodiment, access to a specific portion of the first multimedia timeline may be selectively provided based on an access level of a user, at **2112**.

[0205] In a particular embodiment, at least a portion of the first multimedia timeline may be configured to playback at the first multimedia device in a timeline format, at **2114**. At least a portion of the first multimedia timeline may be sent to the first multimedia device in response to the first request, at **2116**.

[0206] In a particular embodiment, at least a portion of the first multimedia timeline may be configured to playback at the first multimedia device in a format other than a chronological timeline format. In a particular embodiment, the format other than a chronological timeline further comprises a favorites format based on an input from the first user.

[0207] In a particular embodiment, a second request for at least a portion of a second multimedia timeline may be received from a second multimedia device coupled to the server via the network, the second multimedia timeline corresponding to a second life event of a second user, at **2118**. In a particular embodiment, at least a portion of the second multimedia timeline may be sent to the second multimedia device in response to the second request, at **2120**.

[0208] Referring to FIG. **22**, a particular illustrative embodiment of a method of adding data objects to a multimedia timeline is depicted and generally designated **2200**. A first data object may be received to add to a first multimedia timeline, where the first multimedia timeline corresponds to a first life event, at **2202**. In a particular embodiment, the multimedia timeline may correspond to a life event. In a particular embodiment, the life event may include at least a portion of a person's life. In a particular embodiment, the life event may include a business event. In a particular embodiment, the business event may include a meeting, a presentation, a conference, a project, a career, any other business event, or any combination thereof. In a particular embodiment, the life event may include a social event. In a particular embodiment, the social event may include a religious activity, a performance, a party, a sporting activity, a fraternal organization activity, a recreational activity, a festival, any other social events, or any combination thereof.

[0209] A first date reference for the first data object may be received, at **2204**. The first data object may be added to the first multimedia timeline in a position based on the first date reference, at **2206**. In a particular embodiment, adding the first data object to the first multimedia timeline includes adding metadata to link the first data object to a second data object. The second data object may be stored at the first multimedia timeline before the first data object is received. In a particular embodiment, the second data object may be stored in a position at the first multimedia timeline before the position of the first data object. In a particular embodiment, the first multimedia timeline may include metadata that links a second data object that is stored at the first multimedia timeline to a third data object that is stored at the first multimedia timeline. In a particular embodiment, the metadata links the second data object to a multiple data objects, including the third data object. In a particular embodiment, at least one of the multiple data objects is not stored at the first multimedia timeline.

[0210] In a particular embodiment, a first object reference element may be added to the first multimedia timeline, at **2208**. The first object reference element may include a pointer to the first data object. In a particular embodiment, the first object reference element may include a media type of the first data object, a reference to a thumbnail of the first data object, other data associated with the first data object, or any combination thereof.

[0211] In a particular embodiment, a first linking element may be added to a first timeline data structure, at **2210**. The first linking element may include the first date reference and a first pointer to the first object reference element. In a particular embodiment, the first linking element may be added to the first timeline data structure in chronological order based on the first date reference.

[0212] In a particular embodiment, the first timeline data structure may include a header having a timeline identifier to uniquely identify the first multimedia timeline. In a particular embodiment, the timeline identifier may be a unique or semi-unique timeline identifier. In a particular embodiment, the first timeline data structure may include a linked list of multiple linking elements associated with the first multimedia timeline. In a particular embodiment, the multiple linking elements may be chronologically ordered. In a particular embodiment, the first timeline data structure may be the first data structure **1301** of FIG. **13**.

[0213] In a particular embodiment, other linking elements having other date references may be added to the first timeline data structure based on the date references. In a particular embodiment, one or more linking elements that include pointers to the first data object or the first object reference element may be added to other timeline data structures associated with other life events.

[0214] In a particular embodiment, a second data object is received, at **2212**. A second date reference for the second data object may be received, at **2214**. A second object reference element may be added to the first multimedia timeline, at **2216**. The second object reference element may include a pointer to the second data object. A second linking element may be added to the first timeline data structure, at **2218**. The second linking element may include the second date reference and a pointer to the second object reference element. The second linking element may be added to the first timeline data structure in chronological order based on the second date reference.

[0215] Referring to FIG. **23**, another illustrative embodiment of a method of providing a multimedia timeline is depicted and generally designated **2300**. A timeline data structure is processed at a data processor to retrieve a particular data object based on a particular date reference, at **2302**. In

a particular embodiment, the data processor may execute instructions tangibly embodied in a computer-readable medium.

[0216] In a particular embodiment, the timeline data structure may include a header to identify a multimedia timeline, where the multimedia timeline corresponds to a life event. In a particular embodiment, the timeline data structure may include a chronologically ordered group of linking elements. At least one of the linking elements may be linked to the header. The chronologically ordered group of linking elements may include information to link to data objects of the multimedia timeline. Each linking element may be associated with a date reference. In a particular embodiment, the timeline data structure may be the first data structure **1301** of FIG. **13**.

[0217] In a particular embodiment, a first linking element is located, at **2304**. The particular date reference is compared to a first date reference of the first linking element, at **2306**. A next linking element is located when the particular date reference is later than the first date reference, at **2308**.

[0218] In a particular embodiment, each linking element of the chronologically ordered group of linking elements is associated with at least one of the data objects. In a particular embodiment, the chronologically ordered group of linking elements may be modifiable by the data processor to maintain a chronological order when a linking element is added. In a particular embodiment, each linking element may link to at least one object reference element of a group of object reference elements. In a particular embodiment, each of the group of object reference elements links to at least one of the data objects.

[0219] In a particular embodiment, a second linking element having the particular date reference may be located, at **2310**. A first object reference element that the second linking element links to may be located, at **2312**. A data object that the first object reference element links to may be retrieved, at **2314**. The particular data object may be provided to a display device, at **2316**.

[0220] Referring to FIG. **24**, a particular illustrative embodiment of a method of displaying a multimedia timeline is depicted and generally designated **2400**. Data associated with a multimedia timeline is received, at **2402**. In a particular embodiment, the multimedia timeline may correspond to a life event. A first view may be generated to display a first portion of the multimedia timeline in a timeline format at a display device, at **2404**. In a particular embodiment, the first portion of the multimedia timeline includes the complete multimedia timeline. In another embodiment, the first portion of the multimedia timeline includes a portion, but not all of the multimedia timeline.

[0221] In a particular embodiment, the first view may correspond to a first time period. In a particular embodiment, the first time period may be based on a day. In a particular embodiment, the first view may include multiple selectable indicators that are displayed in a chronological order. In a particular embodiment, the first view may be the daily view **1402** of FIG. **14**.

[0222] In a particular embodiment, a selection of a first selectable indicator may be received, at **2406**. In a particular embodiment, multimedia content associated with the first selectable indicator may be displayed at a display window, at **2408**. In a particular embodiment, the display window may be configured to provide any type of multimedia content, including audio, video, textual, etc. In a particular embodiment, the display window may be the display window **1418** of FIG. **14**.

[0223] In a particular embodiment, a selectable record icon to add an annotation to the multimedia content may be provided, at **2410**. In a particular embodiment, a signal may be sent to an input device to record an annotation when a selection of the record icon is received, at **2412**. In a particular embodiment, data that includes the annotation may be received from the input device, at **2414**. In a particular embodiment, the input device may be the user input device **106** of FIG. **1**.

[0224] In a particular embodiment, a command to display a second portion of the multimedia timeline may be received, at **2416**. The second portion of the multimedia timeline may correspond to a longer time period than the first view. In a particular embodiment, a second view may be generated to display the second portion of the multimedia timeline in a timeline format at the display device, at **2418**. In a particular embodiment, the second view may include a second plurality of selectable indicators that are displayed in a chronological order. In a particular embodiment, the first view may be a weekly view, and the second view may be a monthly view. In a particular embodiment, the second view may be the weekly view **1404** of FIG. **14**.

[0225] Referring to FIG. **25**, another illustrative embodiment of a method of displaying a multimedia timeline is depicted and generally designated **2500**. Data associated with a multimedia timeline may be received, at **2502**. The multimedia timeline may correspond to a life event. In a particular embodiment, data associated with the multimedia timeline may be received via a dongle that provides a dedicated exclusive wireless network for multimedia timeline data. In a particular embodiment, the dongle may be the dongle **910** of FIG. **9**.

[0226] A group of selectable indicators associated with the multimedia timeline may be generated to display at a display device, at **2504**. A group of thumbnails of the multimedia timeline may be provided to display at the display device, at **2508**. In a particular embodiment, the thumbnails may correspond to data objects associated with the selectable indicators. In a particular embodiment, each thumbnail may be displayed proximate to a selectable indicator that is associated with a corresponding data object. In a particular embodiment, multiple thumbnails may be associated with a particular selectable indicator. In a particular embodiment, a sequence of the multiple thumbnails may be displayed proximate to the particular selectable indicator, at **2510**.

[0227] Referring to FIG. **26**, a particular illustrative embodiment of a method of accessing a multimedia timeline is depicted and generally designated **2600**. First multimedia timeline data is received at a multimedia device, at **2602**. In a particular embodiment, the multimedia device may be the multimedia device **102** of FIG. **1**. The first multimedia timeline data may correspond to at least a first portion of a multimedia timeline. The multimedia timeline may correspond to a life event.

[0228] A first graphical user interface (GUI) may be provided to a display device, at **2604**. The first GUI may include at least a first portion of the multimedia timeline in a timeline format. In a particular embodiment, the multimedia device may be directly connected to the display device. In a particular embodiment, the multimedia device may be hardwired to the display device. In a particular embodiment, the display

device may be a television or a monitor. The first GUI may be provided without using a personal computer.

[0229] In a particular embodiment, the multimedia timeline data may include a header and metadata associated with data objects of the multimedia timeline. In a particular embodiment, the metadata may identify a date reference and a media type of each of the data objects. In a particular embodiment, the metadata may identify a date reference and a media type of each data object. In a particular embodiment, at least one data object of the multimedia timeline is not provided to the multimedia device until an indicator corresponding to the at least one data object is selected at the first GUI.

[0230] In a particular embodiment, a navigation command may be received from a user input device, at **2606**. In a particular embodiment, the user input device may be the user input device **106** of FIG. **1**. A request may be sent to a timeline server via a network, at **2608**. The request may identify a timeline date reference corresponding to the navigation command. In a particular embodiment, the timeline server may be the timeline server **302** of FIG. **3**.

[0231] In a particular embodiment, second timeline multimedia data corresponding to a second portion of the multimedia timeline may be received, at **2610**. A second GUI may be provided to the display device, at **2612**. The second GUI may include at least the second portion of the multimedia timeline in a timeline format.

[0232] In a particular embodiment, a selection command may be received from a user input device, at **2614**. A request may be sent to a timeline server via the network, at **2616**. The request may identify a data object corresponding to the selection command. In a particular embodiment, the data object may be received from the timeline server, at **2618**. The data object may be provided to the display device, at **2620**.

[0233] In a particular embodiment, the multimedia device may be a set-top box, a television, a personal computer, a personal music player, a remote control device, a digital video disc player, or a digital camera. In a particular embodiment, the multimedia device may include at least one of an access key port and a password security mechanism to access the multimedia timeline. In a particular embodiment, the multimedia device may be configured to wirelessly communicate via a wireless network. In a particular embodiment, the multimedia device may be located at a private residence, a coffee shop, a hotel, or an airport. The multimedia timeline may be determined based on an access key device inserted into a key port of the multimedia device.

[0234] Referring to FIG. **27**, another illustrative embodiment of a method of accessing a multimedia timeline is depicted and generally designated **2700**. Authentication information to access a multimedia timeline may be received at a timeline server via a network, at **2702**. A graphical user interface may be provided to a display device, at **2704**. The graphical user interface may include a first portion of a multimedia timeline in a timeline format. The multimedia timeline may be associated with the authentication information. The multimedia timeline may correspond to a life event.

[0235] In a particular embodiment, a user interface command may be received from a user input device, at **2706**. A second portion of the multimedia timeline may be identified in response to the user interface command, at **2708**. A determination if the second portion of the multimedia timeline is stored at a memory of a multimedia device may be made, at **2710**. A request may be sent to a dedicated timeline server for the second portion of the multimedia timeline when the second portion of the multimedia timeline is not stored at the memory of the multimedia device, at **2712**.

[0236] Referring to FIG. **28**, a particular illustrative embodiment of a method of wirelessly communicating multimedia timeline data is depicted and generally designated **2800**. A first wireless network may be provided to communicate data associated with a multimedia timeline between a multimedia device and a second network, at **2802**. The multimedia timeline may correspond to a life event. In a particular embodiment, the first wireless network may be configured to provide a dedicated wireless access point to the second network to communicate multimedia timeline data between the multimedia device and the timeline server coupled to the second network. In a particular embodiment, the first wireless network may exclusively communicate multimedia timeline data between the multimedia device and the timeline server. In a particular embodiment, the first wireless network may be provided by a dongle directly connected to customer premises equipment. In a particular embodiment, the first wireless network may be provided by the dongle **1008** of FIG. **10**.

[0237] In a particular embodiment, a request may be received from the multimedia device via the first wireless network, at **2804**. The request may identify the multimedia timeline. The request may be sent to a timeline server via the second network, at **2806**.

[0238] In a particular embodiment, a first message may be received via the first wireless network, at **2808**. A first sender of the first message may be determined, at **2810**. The first message may be selectively sent when the first sender is the multimedia device, at **2812**.

[0239] In a particular embodiment, a second message may be received via the second network, at **2814**. In a particular embodiment, a recipient of the second message may be determined, at **2816**. In a particular embodiment, a second sender of the second message may be determined, at **2818**. In a particular embodiment, the second message may be selectively sent when the recipient is the multimedia device, at **2820**. In a particular embodiment, the second message may be selectively sent when the recipient is the multimedia device, when the second sender is a multimedia timeline server, when the message contains multimedia timeline data, or any combination thereof.

[0240] Referring to FIG. **29**, another illustrative embodiment of a method of wirelessly communicating multimedia timeline data is depicted and generally designated **2900**. In a particular embodiment, an exclusive wireless access point to the network may be provided to communicate multimedia timeline data between an authorized multimedia device and a timeline server coupled to the network, at **2902**. In a particular embodiment, the wireless access point may be provided by a dongle directly coupled to customer premises equipment. In a particular embodiment, the wireless access point may be provided by the dongle **1008** of FIG. **10**.

[0241] In a particular embodiment, data associated with a multimedia timeline may be received from a network coupled to the network interface, at **2904**. The multimedia timeline may correspond to a life event.

[0242] In a particular embodiment, the data may be selectively communicated between a network interface and a wireless transceiver, at **2906**. In a particular embodiment, the network interface may include at least one of an Ethernet interface and a Universal Serial Bus (USB) interface. In a particular embodiment, a connector may be coupled to the network interface. The connector may enable a connection to

at least one of a modem, an access point, a gateway, a router, and a switch. In a particular embodiment, the data may be wirelessly transmitted to a multimedia device via the wireless transceiver, at **2908**.

[0243] Referring to FIG. **30**, another illustrative embodiment of a method of wirelessly communicating multimedia timeline data is depicted and generally designated **3000**. A wireline network may be detected that is coupled to a dongle via a modem, at **3002**. The dongle may be configured to wirelessly communicate with only an authorized device. In a particular embodiment, the dongle may be the dongle **1008** of FIG. **10**.

[0244] Data corresponding to a multimedia timeline may be received from a timeline server via the modem, at **3004**. The multimedia timeline may correspond to a life event. The data corresponding to the multimedia timeline may be transmitted to the authorized device, at **3006**. In a particular embodiment, the data may be wirelessly transmitted to more than one authorized devices.

[0245] In a particular embodiment, a wireless network that is exclusive to the authorized device and a direct connection to the wireline network may be established by the dongle without using a personal computer. In a particular embodiment, the dongle may be preconfigured to establish a wireless network exclusive to the authorized device without requiring a software installation by a user. In a particular embodiment, the dongle may be preconfigured to establish a wireless network exclusive to the authorized device without requiring settings configured by a user. In a particular embodiment, the dongle may provide an exclusive wireless access point to the network to communicate multimedia timeline data between the authorized device and a timeline server coupled to the network.

[0246] Referring to FIG. **31**, a particular illustrative embodiment of a method of interacting with a multimedia timeline user interface is depicted and generally designated **3100**. A first input may be received from a first selector of a remote control device, at **3102**. In a particular embodiment, the remote control device may be incorporated into an electronic device. In a particular embodiment, the electronic device may be a video camera, a digital camera, a telephone, or a portable music player.

[0247] In a particular embodiment, the first selector may be configured to make a selection of a graphical user interface (GUI) associated with a multimedia timeline. The multimedia timeline may correspond to a life event. In a particular embodiment, the first selector may be a button.

[0248] In a particular embodiment, the selection may be transmitted to a multimedia device, at **3104**. The multimedia device may be configured to provide the GUI to a display device. At least one first date range selector configured to modify a date range displayed on the GUI may be provided, at **3106**. In a particular embodiment, a first input may be received from the first date range selector of the remote control device, at **3108**. The first date range selector may include a rotary selector to broaden the date range when rotated in a first direction and to narrow the date range when rotated in a second direction.

[0249] In a particular embodiment, the multimedia timeline may be received at the multimedia device via a wireless network provided by a dongle coupled to a modem. In a particular embodiment, the dongle may be directly connected to the modem. The wireless network may be dedicated to providing multimedia timeline data communication exclusively with the multimedia device.

[0250] In a particular embodiment, a communication may be received from the multimedia device to initiate an audio recording via a microphone located in the remote control device, at **3110**. In a particular embodiment, a recording of a digital audio file from an input received from the microphone may be initiated, at **3112**. In a particular embodiment, the digital audio file may be designated as an annotation relative to at least a portion of the timeline. The at least a portion of the timeline may have a date range based on a time period. In a particular embodiment, the time period may be selected from one of a second, a minute, an hour, a day, a week, a month, a year, a decade, a century, and a millennium.

[0251] In a particular embodiment, the digital audio file may be transmitted to the multimedia device, at **3114**. An instruction may be transmitted to the multimedia device to add the digital audio file to a selected timeline, at **3116**.

[0252] Referring to FIG. **32**, another illustrative embodiment of a method of accessing a multimedia timeline is depicted and generally designated **3200**. An access key may be provided to obtain access to a multimedia timeline, where the multimedia timeline corresponds to a life event, at **3202**. In a particular embodiment, the access key may be configured to allow a determination of a level of access to the multimedia timeline. The level of access may be at least partially restricted based on the access key. In a particular embodiment, the access key may be provided by an access key device. In a particular embodiment, the access key may include a cryptographic key. In a particular embodiment, the access key is provided by the key device master **532** of FIG. **5**.

[0253] In a particular embodiment, the access key may be sent to a multimedia timeline device to obtain access to the multimedia timeline, at **3204**. The multimedia timeline device may be configured to provide a graphical user interface to a display device for display of the multimedia timeline. In a particular embodiment, the multimedia timeline device is the multimedia device **502** of FIG. **5**.

[0254] In a particular embodiment, biometric data of a user may be received, at **3206**. The biometric data may be compared to the access key, at **3208**. Access to the multimedia timeline may be provided when the biometric data matches the access key, at **3210**. In a particular embodiment, the biometric data may include biometric data based on at least one of a fingerprint, a deoxyribo nucleic acid (DNA), an eye retina, an eye iris, a facial pattern, a hand geometry, a voice, a facial thermogram, a signature, a hand vein, and keystroke dynamics.

[0255] Referring to FIG. **33**, a particular illustrative embodiment of a method of providing security for a multimedia timeline is depicted and generally designated **3300**. A first set of multimedia items may be provided to a visual display to obtain access to a multimedia timeline, at **3302**. The multimedia timeline may correspond to a life event. In a particular embodiment, a visual security mechanism to access the multimedia timeline may be initialized based on information received from an access key device. In a particular embodiment, the first set of multimedia items includes a first multimedia item from the multimedia timeline. In a particular embodiment, the first set of multimedia items includes a second multimedia item not from the multimedia timeline.

[0256] In a particular embodiment, a first selection of at least one multimedia item of the first set of multimedia items may be received, at **3304**. In a particular embodiment, the first selection may include more than one multimedia item. Access may be provided to the multimedia timeline when the first selection matches a first key, at **3306**. In a particular embodiment, the first key may allow access to more than one multimedia timeline. In a particular embodiment, the first key may allow access to the multimedia timeline by a multimedia timeline device coupled to a dongle configured to establish an exclusive wireless network between the multimedia timeline device and a network access point.

[0257] In a particular embodiment, the first selection may include more than one multimedia item. Access may be provided to the first set of multimedia items when the first selection of more than one multimedia item is made in a correct sequence. In a particular embodiment, access to the multimedia timeline may be disabled after receiving a predetermined number of selections that do not match the first key.

[0258] In a particular embodiment, a determination when the first selection matches the first key may be made, at **3308**. A second set of multimedia items may be provided to a visual display to obtain access to the multimedia timeline, at **3310**. A second selection of at least one multimedia item of the second set of multimedia items may be received, at **3312**. Access to the multimedia timeline may be provided when the first selection matches the first key and the second selection matches a second key.

[0259] In a particular embodiment, a determination when the first selection matches a second key may be made. Restricted access may be provided to the multimedia timeline when the first selection matches the second key. In a particular embodiment, non-restricted access to the multimedia timeline may be provided when the first selection matches the first key.

[0260] In a particular embodiment, the restricted access may allow a user to view only a portion of the multimedia timeline. In a particular embodiment, the restricted access may not allow a user to edit any portion of the multimedia timeline. In a particular embodiment, the restricted access may allow a user to edit only a portion of the multimedia timeline. In a particular embodiment, the restricted access may allow a user to record an annotation for a data object stored in the multimedia timeline.

[0261] In a particular embodiment, a determination when the first selection matches the first key may be made. A second set of multimedia items may be provided to the visual display to obtain access to the multimedia timeline. A second selection of at least one multimedia item of the second set of multimedia items may be received. A third set of multimedia items may be provided to the visual display to obtain access to the multimedia timeline. A third selection of at least one multimedia item of the third set of multimedia items may be received. Access to the multimedia timeline may be provided when the first selection matches the first key, the second selection matches a second key, and the third selection matches a third key. In a particular embodiment, each set of multimedia items may contain twelve multimedia items.

[0262] Referring to FIG. **34**, an illustrative embodiment of a general computer system is shown and is designated **3400**. The computer system **3400** can include a set of instructions that can be executed to cause the computer system **3400** to perform any one or more of the methods or computer based functions disclosed herein. The computer system **3400**, or any portion thereof, may operate as a standalone device or may be connected, e.g., using a network, to other computer systems or peripheral devices, including a server or multimedia device, as shown in FIGS. **1-12**

[0263] In a networked deployment, the computer system may operate in the capacity of a server, such as a timeline server or content acquisition server, or a multimedia device. The computer system **3400** can also be implemented as or incorporated into various devices, such as a personal computer (PC), a tablet PC, a set-top box (STB), a personal digital assistant (PDA), a mobile device, a palmtop computer, a laptop computer, a desktop computer, a communications device, a wireless telephone, a land-line telephone, a control system, a camera, a scanner, a facsimile machine, a printer, a pager, a personal trusted device, a web appliance, a network router, switch or bridge, or any other machine capable of executing a set of instructions (sequential or otherwise) that specify actions to be taken by that machine. In a particular embodiment, the computer system **3400** can be implemented using electronic devices that provide voice, video or data communication. Further, while a single computer system **3400** is illustrated, the term "system" shall also be taken to include any collection of systems or sub-systems that individually or jointly execute a set, or multiple sets, of instructions to perform one or more computer functions.

[0264] As illustrated in FIG. **34**, the computer system **3400** may include a processor **3402**, e.g., a central processing unit (CPU), a graphics-processing unit (GPU), or both. Moreover, the computer system **3400** can include a main memory **3404** and a static memory **3406** that can communicate with each other via a bus **3408**. As shown, the computer system **3400** may further include a video display unit **3410**, such as a liquid crystal display (LCD), an organic light emitting diode (OLED), a flat panel display, a solid state display, or a cathode ray tube (CRT). Additionally, the computer system **3400** may include an input device **3412**, such as a keyboard, and a cursor control device **3414**, such as a mouse. The computer system **3400** can also include a disk drive unit **3416**, a signal generation device **3418**, such as a speaker or remote control, and a network interface device **3420**.

[0265] In a particular embodiment, as depicted in FIG. **34**, the disk drive unit **3416** may include a computer-readable medium **3422** in which one or more sets of instructions **3424**, e.g. software, can be embedded. Further, the instructions **3424** may embody one or more of the methods or logic as described herein. In a particular embodiment, the instructions **3424** may reside completely, or at least partially, within the main memory **3404**, the static memory **3406**, and/or within the processor **3402** during execution by the computer system **3400**. The main memory **3404** and the processor **3402** also may include computer-readable media.

[0266] In an alternative embodiment, dedicated hardware implementations, such as application specific integrated circuits, programmable logic arrays and other hardware devices, can be constructed to implement one or more of the methods described herein. Applications that may include the apparatus and systems of various embodiments can broadly include a variety of electronic and computer systems. One or more embodiments described herein may implement functions using two or more specific interconnected hardware modules or devices with related control and data signals that can be communicated between and through the modules, or as portions of an application-specific integrated circuit. Accord-

ingly, the present system encompasses software, firmware, and hardware implementations.

[0267] In accordance with various embodiments of the present disclosure, the methods described herein may be implemented by software programs executable by a computer system. Further, in an exemplary, non-limited embodiment, implementations can include distributed processing, component/object distributed processing, and parallel processing. Alternatively, virtual computer system processing can be constructed to implement one or more of the methods or functionality as described herein.

[0268] The present disclosure contemplates a computer-readable medium that includes instructions **3424** or receives and executes instructions **3424** responsive to a propagated signal, so that a device connected to a network **3426** can communicate voice, video or data over the network **3426**. Further, the instructions **3424** may be transmitted or received over the network **3426** via the network interface device **3420**.

[0269] While the computer-readable medium is shown to be a single medium, the term "computer-readable medium" includes a single medium or multiple media, such as a centralized or distributed database, and/or associated caches and servers that store one or more sets of instructions. The term "computer-readable medium" shall also include any medium that is capable of storing, encoding or carrying a set of instructions for execution by a processor or that cause a computer system to perform any one or more of the methods or operations disclosed herein.

[0270] In a particular non-limiting, exemplary embodiment, the computer-readable medium can include a solid-state memory such as a memory card or other package that houses one or more non-volatile read-only memories. Further, the computer-readable medium can be a random access memory or other volatile re-writable memory. Additionally, the computer-readable medium can include a magneto-optical or optical medium, such as a disk or tapes or other storage device to capture carrier wave signals such as a signal communicated over a transmission medium. A digital file attachment to an e-mail or other self-contained information archive or set of archives may be considered a distribution medium that is equivalent to a tangible storage medium. Accordingly, the disclosure is considered to include any one or more of a computer-readable medium or a distribution medium and other equivalents and successor media, in which data or instructions may be stored.

[0271] In accordance with various embodiments, the methods described herein may be implemented as one or more software programs running on a computer processor. Dedicated hardware implementations including, but not limited to, application specific integrated circuits, programmable logic arrays and other hardware devices can likewise be constructed to implement the methods described herein. Furthermore, alternative software implementations including, but not limited to, distributed processing or component/object distributed processing, parallel processing, or virtual machine processing can also be constructed to implement the methods described herein.

[0272] It should also be noted that software that implements the disclosed methods may optionally be stored on a tangible storage medium, such as: a magnetic medium, such as a disk or tape; a magneto-optical or optical medium, such as a disk; or a solid state medium, such as a memory card or other package that houses one or more read-only (non-volatile) memories, random access memories, or other re-writable (volatile) memories. The software may also utilize a signal containing computer instructions. A digital file attachment to e-mail or other self-contained information archive or set of archives is considered a distribution medium equivalent to a tangible storage medium. Accordingly, the disclosure is considered to include a tangible storage medium or distribution medium as listed herein, and other equivalents and successor media, in which the software implementations herein may be stored.

[0273] Although the present specification describes components and functions that may be implemented in particular embodiments with reference to particular standards and protocols, the invention is not limited to such standards and protocols. For example, standards for Internet and other packet switched network transmission (e.g., TCP/IP, UDP/IP, HTML, HTTP) represent examples of the state of the art. Such standards are periodically superseded by faster or more efficient equivalents having essentially the same functions. Accordingly, replacement standards and protocols having the same or similar functions as those disclosed herein are considered equivalents thereof.

[0274] In a particular embodiment, a method of providing a multimedia timeline is disclosed. The method includes receiving at a computer a selection of a first set of data objects to add to a multimedia timeline. The first set of data objects corresponds to a life event. The method also includes sending the first set of data objects to a server to be included in the multimedia timeline. The multimedia timeline is configured to be accessible for viewing in a timeline format.

[0275] In another embodiment, a method is disclosed. The method includes receiving a first data object at a server. The method includes adding the first data object to a first multimedia timeline that corresponds to a first life event of a first user. The method includes receiving a first request for at least a portion of the first multimedia timeline from a first multimedia device coupled to the server via a network. The method further includes sending the at least a portion of the first multimedia timeline to the first multimedia device in response to the first request.

[0276] In another embodiment, a system is disclosed. The system includes a processor and a data storage device accessible to the processor. The system also includes an interface accessible to the processor to send and receive data via a network. The system further includes a memory accessible to the processor. The memory includes instructions executable by the processor to receive a first set of data objects via the interface. The memory includes instructions executable by the processor to add the first set of data objects to a multimedia timeline that corresponds to a life event. The memory includes instructions executable by the processor to receive a first request for at least a portion of the multimedia timeline from a multimedia device. The memory further includes instructions executable by the processor to send the at least a portion of the multimedia timeline to the multimedia device in response to the first request. The at least a portion of the multimedia timeline includes at least one data object of the first set of data objects.

[0277] In another embodiment, a computer-readable medium is disclosed. The computer readable medium has instructions to cause a processor to execute a method. The method may include determining a set of data objects to add to a multimedia timeline. The multimedia timeline may correspond to a life event. The method may also include gener-

ating metadata that includes a separate date reference for each data object of the set of data objects.

[0278] In another embodiment, a method is disclosed. The method includes receiving a first data object to add to a first multimedia timeline. The first multimedia timeline corresponds to a first life event. The method includes receiving a first date reference for the first data object. The method further includes adding the first data object to the first multimedia timeline in a position based on the first date reference.

[0279] In another embodiment, a method is disclosed that includes processing a timeline data structure at a data processor to retrieve a particular data object based on a particular date reference. The method also includes providing the particular data object to a display device. The timeline data structure may include a header to identify a multimedia timeline, where the multimedia timeline corresponds to a life event. The timeline data structure may also include a chronologically ordered group of linking elements. At least one of the linking elements may be linked to the header. The chronologically ordered group of linking elements may include information to link to data objects of the multimedia timeline. Each linking element may be associated with a date reference.

[0280] In another embodiment, a system is disclosed. The system includes a processor and a computer-readable medium accessible to the processor. The computer-readable medium may have instructions to cause the processor to execute a method. The method may include selecting a data object to add to a multimedia timeline, where the multimedia timeline corresponds to a life event. The method may include selecting a date reference for the data object. The method may further include adding the data object to the multimedia timeline based on the date reference.

[0281] In another embodiment, a computer-readable medium having instructions to cause a processor to execute a method is disclosed. The method includes receiving a data object to add to a multimedia timeline, where the multimedia timeline corresponds to a life event. The method may include receiving a date reference for the data object via user input. The method may further include adding the data object to the multimedia timeline at a position based on the date reference.

[0282] In another embodiment, a method of displaying a multimedia timeline is disclosed. The method includes receiving data associated with a multimedia timeline. The multimedia timeline may correspond to a life event. The method may also include generating a first view to display a first portion of the multimedia timeline in a timeline format at a display device. The first view may correspond to a first time period.

[0283] In another embodiment, a graphical user interface to display a multimedia timeline is disclosed. The graphical user interface includes a plurality of selectable indicators associated with a multimedia timeline. The multimedia timeline may correspond to a life event. A selection of at least one of the plurality of selectable indicators may cause a display window to provide a data object of the multimedia timeline.

[0284] In another embodiment, a computer-readable medium is disclosed. The computer-readable medium has instructions to cause a processor to execute a method. The method includes receiving data associated with a multimedia timeline. The multimedia timeline may correspond to a life event. The method may include generating a plurality of selectable indicators associated with the multimedia timeline to be displayed at a display device. The method may further include providing a plurality of thumbnails of the multimedia timeline to display at the display device. Each of the plurality of thumbnails may correspond to a data objects associated with one of the plurality of selectable indicators. Each thumbnail of the plurality of thumbnails may be displayed proximate to a selectable indicator that is associated with a corresponding data object.

[0285] In another embodiment, a method is disclosed. The method includes receiving first multimedia timeline data at a multimedia device, the first multimedia timeline data corresponding to at least a first portion of a multimedia timeline. The multimedia timeline may correspond to a life event. The method may further include providing a first graphical user interface (GUI) to a display device. The first GUI may include at least a first portion of the multimedia timeline in a timeline format.

[0286] In another embodiment, a system is disclosed. The system may include a network interface and a processor coupled to the network interface. The system may also include a display interface coupled to the processor to communicate with a display device. The system may further include a computer-readable medium accessible to the processor and having instructions to cause the processor to execute a method. The method may include receiving multimedia timeline data from a timeline server via the network interface. The multimedia timeline data may correspond to at least a portion of a multimedia timeline. The multimedia timeline may correspond to a life event. The method may further include providing a graphical user interface to the display device via the display interface. The graphical user interface may include the at least a portion of the multimedia timeline in a timeline format

[0287] In another embodiment, a computer-readable medium is disclosed. The computer-readable medium has instructions to cause a processor to execute a method. The method may include receiving authentication information to access a multimedia timeline at a timeline server via a network. The method may also include providing a graphical user interface to a display device. The graphical user interface may include a first portion of a multimedia timeline in a timeline format. The multimedia timeline may be associated with the authentication information. The multimedia timeline may correspond to a life event.

[0288] In another embodiment, a method is disclosed. The method includes providing a wireless first network to communicate data associated with a first multimedia timeline between a multimedia device and a second network. The multimedia timeline may correspond to a life event. A request may be received from the multimedia device via the wireless first network. The request may identify a multimedia timeline. The request may be sent to a timeline server via the second network.

[0289] In another embodiment, a device is disclosed. The device may include a wireless transceiver. The device may also include a network interface. The device may further include a processor coupled to the wireless transceiver and further coupled to the network interface. The processor may be configured to receive data associated with a multimedia timeline from a network coupled to the network interface. The multimedia timeline may correspond to a life event. The processor may be configured to selectively communicate the data between the network interface and the wireless transceiver. The processor may be configured to wirelessly transmit the data to a multimedia device via the wireless transceiver.

[0290] In another embodiment, a computer-readable medium is disclosed. The computer-readable medium has instructions to cause a processor to perform a method. The method may include detecting a wireline network that is coupled to a dongle via a modem. The dongle may be configured to wirelessly communicate with only authorized devices. The method may include receiving data corresponding to a multimedia timeline from a timeline server via the modem. The multimedia timeline may correspond to a life event. The method may further include wirelessly transmitting the data corresponding to the multimedia timeline to at least one of the authorized devices.

[0291] In another embodiment, a remote control apparatus is disclosed. The remote control apparatus may include a first button configured to make a selection of a graphical user interface (GUI) associated with a multimedia timeline. The multimedia timeline may correspond to a life event. The remote control apparatus may include a transmitter to transmit the selection to a multimedia device. The multimedia device may be configured to provide the GUI to a display device. The remote control apparatus may further include at least one first date range selector configured to modify a date range displayed on the GUI.

[0292] In another embodiment, a method for interacting with a multimedia timeline user interface is disclosed. The method may include receiving a first input from a first button of a remote control device. The first button may be configured to make a selection of a graphical user interface (GUI) associated with a multimedia timeline. The multimedia timeline may correspond to a life event. The method may include transmitting the selection to a multimedia device. The multimedia device may be configured to provide the GUI to a display device. The method may further include providing at least one first date range selector configured to modify a date range displayed on the GUI.

[0293] In another embodiment, a computer-readable medium internal to a remote control device is disclosed. The computer-readable medium has instructions to cause a processor to perform a method. The method may include receiving a first input from a first button. The first button may be configured to make a selection of a graphical user interface (GUI) associated with a multimedia timeline. The multimedia timeline may correspond to a life event. The method may include transmitting the selection to a multimedia device. The multimedia device may be configured to provide the GUI to a display device. The method may further include providing at least one first date range selector configured to modify a date range displayed on the GUI.

[0294] In another embodiment, a device is disclosed that includes a memory to store an access key to obtain access to a multimedia timeline. The multimedia timeline may correspond to a life event. The device may include an interface to provide the access key to a multimedia timeline device to obtain access to the multimedia timeline. The multimedia timeline device may be configured to provide a graphical user interface to a display device for display of the multimedia timeline.

[0295] In another embodiment, a method is disclosed that includes providing an access key to obtain access to a multimedia timeline. The multimedia timeline may correspond to a life event. The method may include sending the access key to a multimedia timeline device to obtain access to the multimedia timeline. The multimedia timeline device may be configured to provide a graphical user interface to a display device for display of the multimedia timeline.

[0296] In another embodiment, a method is disclosed that includes providing a first set of multimedia items to a visual display to obtain access to a multimedia timeline. The multimedia timeline may correspond to a life event. The method may include receiving a first selection of at least one of the first set of multimedia items. The method may further include providing access to the multimedia timeline when the first selection matches a first key.

[0297] In another embodiment, a graphical user interface is disclosed that includes a first screen. The first screen may include a first set of multimedia items provided to obtain access to a multimedia timeline. The multimedia timeline may correspond to a life event. The first screen may also include a first selection button to select a first selection. The first selection may include at least one multimedia item from the first set of multimedia items. The first screen may further include a first control button to indicate that the first selection is complete. Access to the multimedia timeline may be granted when the first selection matches a first key.

[0298] In another embodiment, a computer-readable medium is disclosed. The computer-readable medium has instructions to cause a processor to perform a method. The method may include providing a first set of multimedia items to a visual display to obtain access to a multimedia timeline. The multimedia timeline may correspond to a life event. The method may include receiving a first selection of at least one of the first set of multimedia items. The method may further include providing access to the multimedia timeline when the selection matches a first key.

[0299] The illustrations of the embodiments described herein are intended to provide a general understanding of the structure of the various embodiments. The illustrations are not intended to serve as a complete description of all of the elements and features of apparatus and systems that utilize the structures or methods described herein. Many other embodiments may be apparent to those of skill in the art upon reviewing the disclosure. Other embodiments may be utilized and derived from the disclosure, such that structural and logical substitutions and changes may be made without departing from the scope of the disclosure. Additionally, the illustrations are merely representational and may not be drawn to scale. Certain proportions within the illustrations may be exaggerated, while other proportions may be minimized. Accordingly, the disclosure and the figures are to be regarded as illustrative rather than restrictive.

[0300] One or more embodiments of the disclosure may be referred to herein, individually and/or collectively, by the term "invention" merely for convenience and without intending to voluntarily limit the scope of this application to any particular invention or inventive concept. Moreover, although specific embodiments have been illustrated and described herein, it should be appreciated that any subsequent arrangement designed to achieve the same or similar purpose may be substituted for the specific embodiments shown. This disclosure is intended to cover any and all subsequent adaptations or variations of various embodiments. Combinations of the above embodiments, and other embodiments not specifically described herein, will be apparent to those of skill in the art upon reviewing the description.

[0301] The Abstract of the Disclosure is provided to comply with 37 C.F.R. §1.72(b) and is submitted with the understanding that it will not be used to interpret or limit the scope

or meaning of the claims. In addition, in the foregoing Detailed Description, various features may be grouped together or described in a single embodiment for the purpose of streamlining the disclosure. This disclosure is not to be interpreted as reflecting an intention that the claimed embodiments require more features than are expressly recited in each claim. Rather, as the following claims reflect, inventive subject matter may be directed to less than all of the features of any of the disclosed embodiments. Thus, the following claims are incorporated into the Detailed Description, with each claim standing on its own as defining separately claimed subject matter.

[0302] The above-disclosed subject matter is to be considered illustrative, and not restrictive, and the appended claims are intended to cover all such modifications, enhancements, and other embodiments, which fall within the true spirit and scope of the present invention. Thus, to the maximum extent allowed by law, the scope of the present invention is to be determined by the broadest permissible interpretation of the following claims and their equivalents, and shall not be restricted or limited by the foregoing detailed description.

What is claimed is:

1. A method of accessing a multimedia timeline, the method comprising:

receiving first multimedia timeline data at a multimedia device, the first multimedia timeline data corresponding to at least a first portion of a multimedia timeline, wherein the multimedia timeline corresponds to a life event; and

providing a first graphical user interface (GUI) to a display device, the first GUI including at least a first portion of the multimedia timeline in a timeline format.

2. The method of claim **1**, wherein the life event comprises at least a portion of a person's life.

3. The method of claim **1**, wherein the life event comprises a business event.

4. The method of claim **3**, wherein the business event comprises one of a meeting, a presentation, a conference, a project, and a career.

5. The method of claim **1**, wherein the life event comprises a social event.

6. The method of claim **5**, wherein the social event comprises one of a religious activity, a performance, a party, a sporting activity, a fraternal organization activity, a recreational activity, and a festival.

7. The method of claim **1**, further comprising:

receiving a navigation command from a user input device;

sending a request to a timeline server via a network, the request identifying a timeline date reference corresponding to the navigation command.

8. The method of claim **7**, further comprising:

receiving second timeline multimedia data corresponding to a second portion of the multimedia timeline; and

providing a second GUI to the display device, the second GUI including at least the second portion of the multimedia timeline in a timeline format.

9. The method of claim **1**, further comprising:

receiving a selection command from a user input device;

sending a request to a timeline server via a network, the request identifying a data object corresponding to the selection command.

10. The method of claim **9**, further comprising:

receiving the data object from the timeline server; and

providing the data object to the display device.

11. The method of claim **1**, wherein the multimedia timeline data includes a header and metadata associated with data objects of the multimedia timeline.

12. The method of claim **11**, wherein at least one data object of the multimedia timeline is not provided to the multimedia device until an indicator corresponding to the at least one data object is selected at the first GUI.

13. The method of claim **11**, wherein the metadata identifies a date reference and a media type of each of the data objects.

14. The method of claim **1**, wherein the multimedia device is one of a set-top box, a television, a personal computer, a personal music player, a remote control device, a digital video disc player, and a digital camera.

15. The method of claim **14**, wherein the multimedia device includes at least one of an access key port and a password security mechanism to access the multimedia timeline.

16. The method of claim **1**, wherein the multimedia device is configured to wirelessly communicate via a wireless network.

17. The method of claim **16**, wherein the multimedia timeline is determined based on an access key device inserted into a key port of the multimedia device.

18. The method of claim **16**, wherein the multimedia device is located at a private residence, a coffee shop, a hotel, or an airport.

19. The method of claim **1**, wherein the display device is one of a television and a monitor, and wherein the first GUI is provided without using a personal computer.

20. The method of claim **1**, wherein the multimedia device is directly connected to the display device.

21. A system comprising:

a network interface;

a processor coupled to the network interface;

a display interface coupled to the processor to communicate with a display device; and

a computer-readable medium accessible to the processor and having

instructions to cause the processor to execute a method comprising:

receiving multimedia timeline data from a timeline server via the network interface, the multimedia timeline data corresponding to at least a portion of a multimedia timeline, wherein the multimedia timeline is associated with a life event; and

providing a graphical user interface to the display device via the display interface, the graphical user interface including the at least a portion of the multimedia timeline in a timeline format.

22. The system of claim **21**, wherein the method further comprises:

receiving authentication information from an access key device;

sending the authentication information to an authentication server; and

receiving verification of the authentication information.

23. The system of claim **22**, wherein the authentication server comprises the timeline server.

24. The system of claim **22**, further comprising a key port configured to receive the access key device, wherein the authentication information is received when the access key device is inserted in the key port.

25. The system of claim **24**, wherein the access key device includes a radio-frequency identification component in a plastic housing.

26. The system of claim **24**, further comprising an illuminable element proximate to the key port, wherein the illuminable element when illuminated indicates that at least one multimedia timeline includes data not yet viewed by a user.

27. The system of claim **21**, further comprising a charging circuit to charge a battery of a user input device.

28. The system of claim **27**, wherein the charging circuit comprises at least two contacts configured to receive the user input device.

29. The system of claim **27**, wherein the charging circuit inductively charges the battery.

30. The system of claim **21**, further comprising a port coupled to the processor to receive a data object from a peripheral device.

31. The system of claim **30**, wherein the peripheral device is a digital video disk (DVD) player, a radio, a compact disc (CD) player, a phone, a scanner, a video camera, a microphone, a personal digital assistant (PDA), a camera, a memory stick, a flash memory device, an audio player, a set-top box, or a digital video recorder.

32. The system of claim **30**, wherein the method further comprises:

receiving the data object from the peripheral device; and

sending the data object to the timeline server to add the data object to the multimedia timeline.

33. The system of claim **32**, wherein the data object is automatically received from the peripheral device and sent to the timeline server to be stored in date order.

34. The system of claim **30**, wherein the port is one of a Universal Serial Bus port, a FireWire port, and an Ethernet port.

35. The system of claim **21**, further comprising a wireless interface coupled to the processor to wirelessly communicate with a dedicated multimedia device.

36. The system of claim **35**, wherein the dedicated multimedia device is a user input device.

37. The system of claim **35**, wherein the dedicated multimedia device is a dongle to establish a wireless network for multimedia timeline data.

35. A computer-readable medium having instructions to cause a processor to execute a method comprising:

receiving authentication information to access a multimedia timeline at a timeline server via a network; and

providing a graphical user interface to a display device, the graphical user interface including a first portion of the multimedia timeline in a timeline format, wherein the multimedia timeline is associated with the authentication information, and wherein the multimedia timeline corresponds to a life event.

36. The computer-readable medium of claim **35**, wherein the method further comprises:

receiving a user interface command from a user input device;

identifying a second portion of the multimedia timeline in response to the user interface command;

determining if the second portion of the multimedia timeline is stored at a memory of a multimedia device; and

sending a request to a dedicated timeline server for the second portion of the multimedia timeline when the second portion of the multimedia timeline is not stored at the memory of the multimedia device

* * * * *