US 20020083445A1

(19) United States

(12) Patent Application Publication

(10) Pub. No.: US 2002/0083445 A1

(43) Pub. Date: Jun. 27, 2002

Flickinger et al.

(54) DELIVERING TARGETED ADVERTISEMENTS TO THE SET-TOP-BOX

(76) Inventors: **Gregory C. Flickinger**, Furlong, PA (US); **Charles A. Eldering**, Doylestown, PA (US)

Correspondence Address:
EXPANSE NETWORKS, INC.
300 NORTH BROADSTREET
DOYLESTOWN, PA 18901 (US)

(21) Appl. No.: **09/748,943**

(22) Filed: **Dec. 27, 2000**

Related U.S. Application Data

(63) Non-provisional of provisional application No. 60/229,156, filed on Aug. 31, 2000.

Publication Classification

(51) **Int. Cl.**[7] **H04N 7/025**; H04N 7/10; G06F 3/00; H04N 5/445; G06F 13/00; H04N 7/173

(52) **U.S. Cl.** **725/35**; 725/42; 725/95

(57) **ABSTRACT**

A system and a method for delivering targeted advertisements to the set-top box (STB). The targeted advertisements may be delivered to the STB in a low bandwidth channel or in a high bandwidth channel as an ad channel. The ad channel may be an analog channel wherein the advertisements are transmitted as analog video. Alternatively, the advertisement channel may be a digital channel, and the advertisements may be encoded and transported in the same way as conventional programming. In digital cases, a 6 MHz digital channel may carry several digital advertisement channels. Moreover, other services (e.g., data may be carried within the 6 MHz digital channel). Alternatively, the ad channel may share a 6 MHz bandwidth with one or more other programming channels.

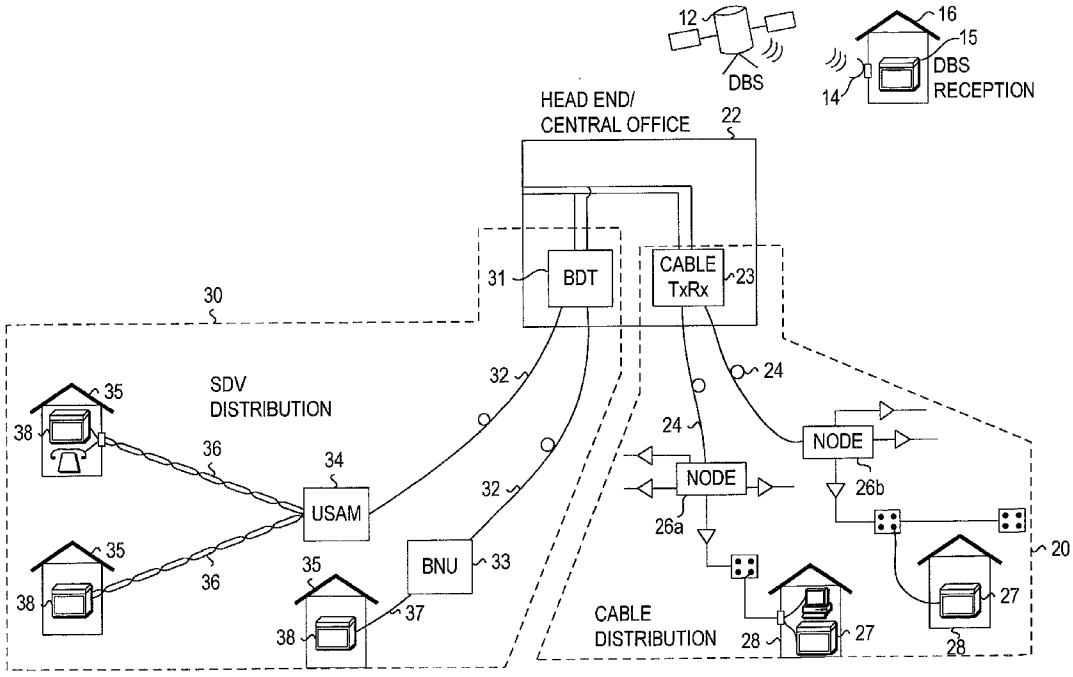

FreeWheel, Ex. 1145

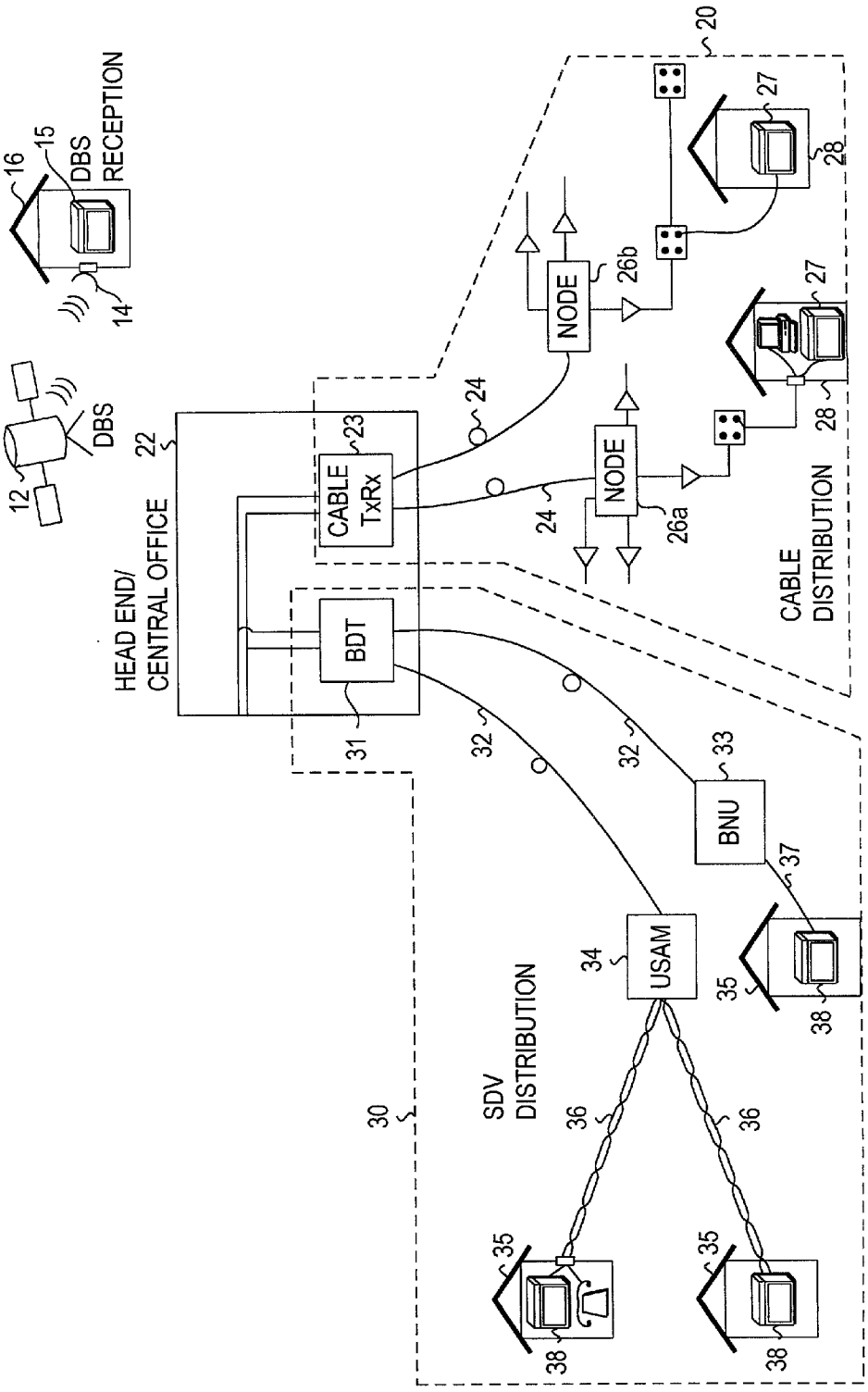
DBS RECEPTION
DBS
HEAD END/ CENTRAL OFFICE
CABLE TxRx
BDT
NODE
NODE
CABLE DISTRIBUTION
BNU
USAM
SDV DISTRIBUTION
12
14
15
16
20
22
23
24
24
26a
26b
27
27
28
28
30
31
32
32
33
34
35
35
35
36
36
37
38
38
38

FIG. 1

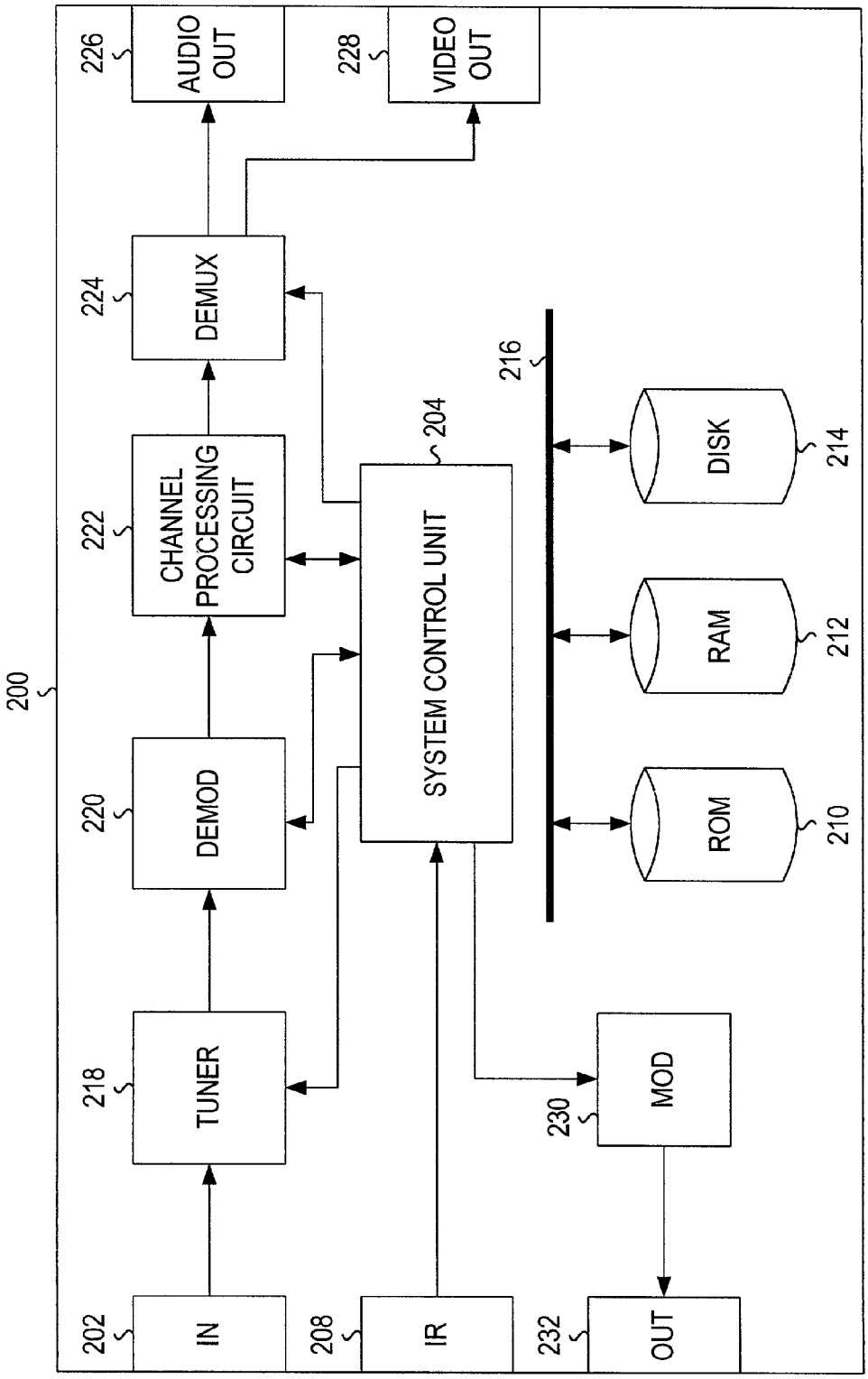
200
202
IN
218
TUNER
220
DEMOD
222
CHANNEL PROCESSING CIRCUIT
224
DEMUX
226
AUDIO OUT
228
VIDEO OUT
208
IR
204
SYSTEM CONTROL UNIT
216
DISK
214
RAM
212
ROM
210
230
MOD
232
OUT

FIG. 2

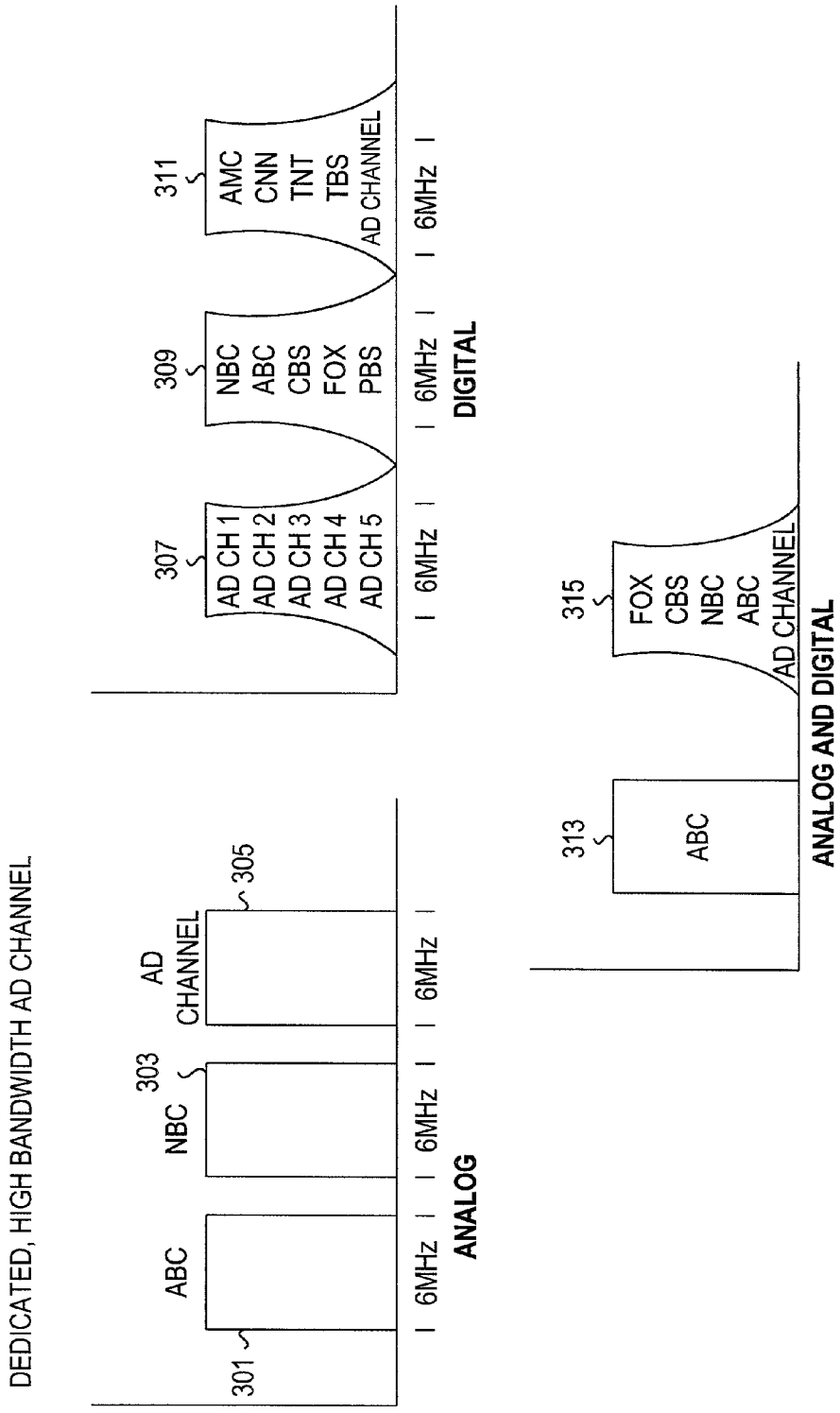
DEDICATED, HIGH BANDWIDTH AD CHANNEL
301
ABC
303
NBC
AD
CHANNEL
305
6MHz
6MHz
6MHz
ANALOG
307
AD CH 1
AD CH 2
AD CH 3
AD CH 4
AD CH 5
309
NBC
ABC
CBS
FOX
PBS
311
AMC
CNN
TNT
TBS
AD CHANNEL
6MHz
6MHz
6MHz
DIGITAL
313
ABC
315
FOX
CBS
NBC
ABC
AD CHANNEL
ANALOG AND DIGITAL

FIG. 3

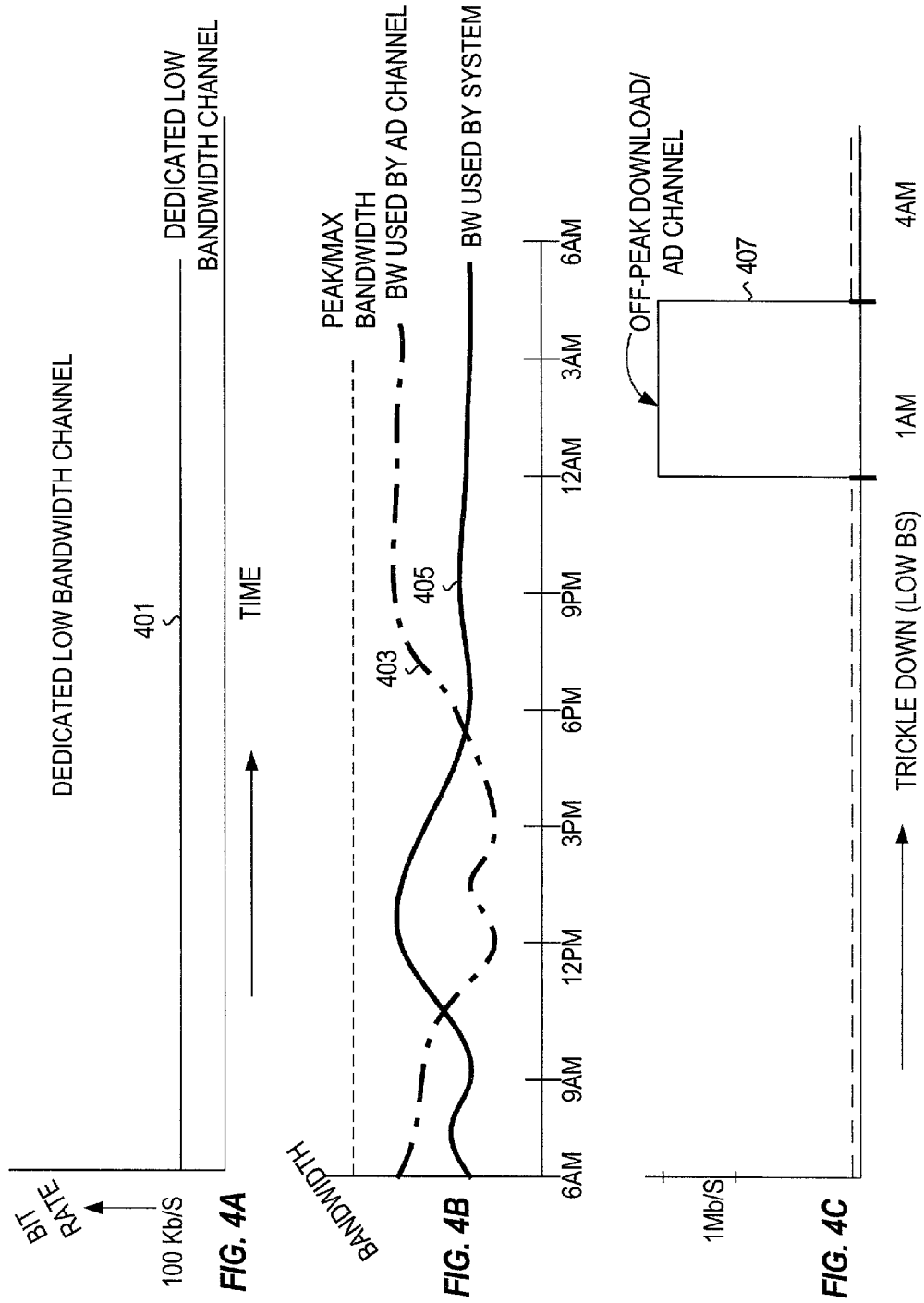

FIG. 4A

FIG. 4B

FIG. 4C

DELIVERING TARGETED ADVERTISEMENTS TO THE SET-TOP-BOX

[0001] This application claims priority under 35 U.S.C. §119(e) for provisional application No. 60/229,156 filed on Aug. 31, 2000 entitled "Method and System for Addressable and Program Independent Advertising", which is incorporated herein by reference.

BACKGROUND OF THE INVENTION

[0002] Traditional broadcast television systems broadcast the same television signal to each person viewing a particular station. Thus, each person viewing a particular channel will necessarily view the same programming content as well as the same advertisements embedded in the programming content. For most broadcast medium industries, such as television, advertising revenues may be the sole source of revenues for the television broadcaster. In a conventional television broadcast system, many advertisers compete for the opportunity to place their advertisement in the advertisement breaks between the programming content. In addition, once a particular advertising break has been filled with an advertisement, the television broadcaster can no longer sell that space in the broadcast stream. Because the advertisements on a particular channel are seen by every viewer tuned to the particular channel in a conventional television system, the advertisements in a conventional television broadcast system cannot be targeted to a particular portion of the audience or even to a particular individual. Therefore, the television broadcast operator may only derive a limited predetermined amount of advertising revenue from any particular advertisement spot and it is desirable to provide the broadcaster with a system for increasing the advertisement revenues that may be generated.

[0003] The problem with advertisements on a conventional television broadcasting system for the advertiser is that each advertiser is interested in reaching only one or more subsets of the total viewing audience, because not all members of the viewing audience may be desirable candidates for receiving a particular advertisement. For example, an advertisement about a product for male hair growth would typically be directed to males because males are more likely to purchase the product. The proportion of the audience which is thought to be genuinely interested in the advertisement (or believed by the advertiser to be a prime candidate to purchase their product) varies by product category, but normally ranges from 20-40%. Therefore, the advertisement viewed by the other 60-80% of the audience, which are not prime candidates, represents a large amount of wasted spending by the advertiser. Therefore, it is desirable to provide a system which permits an advertiser to more carefully direct advertisements to a particular set of people or even to an individual person so that the advertiser does not waste large sums of money on parts of the audience which do not have any interest in their product. Thus, both television broadcasters and advertisers desire a better way in which to provide advertisements to the audience in a more targeted manner.

[0004] The emerging digital television media, in various forms such as digital cable, direct broadcast satellite and wireless cable, provide opportunities for advertisers to better target their advertising messages and provide more opportunities for broadcasters to generate more advertising revenues for a number of reasons. With digital television media, the total viewing audience may be divided into many subgroups based on common interests or common demographic descriptors. Advertising targeting is also possible with digital television media due to an expansion in the bandwidth capacity of the broadcast from 8-100 channels in typical analog television to 200 or more channels in digital. In addition, targeting of the advertisement is further enabled by the capability of a digital set-top box to capture individual household data about viewing preferences and the like.

[0005] There is a need for a method, apparatus and system to utilize the additional bandwidth and the storage capability of the STB to better target ads to groups, families and/or individual subscribers. Moreover, there is a need for individual household data about viewing preferences and the like to be captured, stored, uploaded to the broadcaster and used to further improve the targeting of the advertising messages. To more directly target advertisements to a particular portion of the total audience, the audience may be broken down into subgroups, in real-time, based on one or more factors or a combination of the factors. These factors may include shared demographics, such as gender, age or household income levels, shared preferences and tendencies to purchase certain product categories, such as foreign versus domestic automobiles, vacation travel, and many other factors.

SUMMARY OF THE INVENTION

[0006] The present invention is directed at a system and a method for delivering targeted advertisements to the set-top boxes (STBs). The targeted advertisements may be delivered to the STB in a low bandwidth channel or in a high bandwidth channel. These advertisement (ad) channels could be dedicated solely to ad delivery or could be shared. The channel may comprise 6 MHz bandwidth and may carry nothing but ads.

[0007] The ad channel may be an analog channel wherein the ads are transmitted as analog video. Alternatively, the ad channel may be a digital channel, and the ads may be encoded and transported in the same way as conventional programming. In digital cases, a 6 MHz digital channel may carry several digital ad channels. Moreover, other services (e.g., data) may be carried within the 6 MHz digital channel. Alternatively, the ad channel may share a 6 MHz bandwidth with one or more other programming channels.

BRIEF DESCRIPTION OF THE DRAWINGS

[0008] The accompanying drawings, which are incorporated in and form a part of the specification, illustrate the embodiments of the present invention and, together with the description serve to explain the principles of the invention.

[0009] In the drawings:

[0010] **FIG. 1** is a block diagram of an exemplary television service communication network;

[0011] **FIG. 2** is a block diagram of an exemplary set-top box of **FIG. 1**;

[0012] **FIG. 3** illustrates several examples of how a high bandwidth ad channel could be transmitted, digitally or in analog form; and

[0013] FIGS. **4A-4C** illustrate ad channels being sent on low-moderate bandwidth channels, both at constant bit rates and variable bit rates.

DETAILED DESCRIPTION OF THE PREFERRED EMBODIMENT

[0014] In describing a preferred embodiment of the invention illustrated in the drawings, specific terminology will be used for the sake of clarity. However, the invention is not intended to be limited to the specific terms so selected, and it is to be understood that each specific term includes all technical equivalents which operate in a similar manner to accomplish a similar purpose.

[0015] With reference to the drawings, in general, and **FIGS. 1 through 4** in particular, the apparatus of the present invention is disclosed.

[0016] **FIG. 1** generally illustrates three of the most common types of digital television service delivery networks with which the present invention can be suitably used. These include (1) very high speed digital subscriber line (VDSL), (2) digital cable and (3) digital broadcast satellite (DBS). In a DBS system, a programming stream comprising upwards of one hundred channels of television programming is delivered directly from a geo-stationary satellite transmitter **12** orbiting the earth to a receiving antenna **14** mounted on or near each subscriber's house **16** and from the antenna **14** via a cable to a satellite receiving station **15** in the subscriber's house **16**. The satellite receiving station **15** (which is a form of set-top box (STB)) selects a channel and demodulates the signal for delivery to a monitor (e.g., a television, not shown). Most DBS systems are arranged such that data also can be sent in the upstream direction, that is, from the STB **15** to the DBS provider. In most DBS systems, the STB **15** also is coupled to the telephone line and is designed and programmed to place telephone calls to the DBS service provider to periodically send information in the upstream direction. Such information commonly may comprise requests for Pay-Per-View (PPV) programs and requests for changes in the subscription (a request that one or more of premium channels be added to the service, etc.). The return path can also be over a moderate to high bandwidth digital subscriber line (DSL).

[0017] In a typical digital cable network **20**, multiple channels of television information are transmitted from a head end or central office **22** via a cable network **23**. Particularly, the channels are transmitted via cables **24** to nodes **26**(*a-b*). The nodes **26** are essentially switching/routing stations which service multiple homes (usually a few hundred) The nodes **26** route the signals, over coaxial cable, to individual subscribers **28**. The individual subscriber **28** will have STBs **27** that select a particular channel from the transmit stream, demodulate it and forward it for display on one or more monitors or televisions (not shown). Different data streams can be sent to the different nodes **26** of the network such that households coupled to node **26***a* can receive different programming than households coupled to node **26***b*. Thus, such systems are "addressable" by node, but not by individual subscriber. Upstream information may be sent from the STB **27** to the central office **22** via a dedicated upstream channel over the cable **24**. In cable systems that do not support two-way communication, the upstream "channel" can be through the telephone as described above in connection with DBS systems.

[0018] In accordance with a third common type of system, namely, switched digital video (SDV) **30**, television programming is ultimately delivered to the home over existing telephone wire. Particularly, television signals are transmitted from a Broadband Digital Terminal (BDT) **31** in the central office **22** via wire, typically fiber optic cable **32**, to a universal service access multiplexer (USAM) **34** or a Broadband Network Unit (BNU) **33**. The USAM **34** or the BNU **33** then deliver the data to multiple individual subscriber households **35** via regular telephone twisted wire pair **36** or coaxial cable **37** respectively, using VDSL protocols and equipment. The USAM **34** or the BNU **33** receive a digital signal comprising one or more television channels. However, because of the bandwidth limitations of twisted wire pair **36**, typically only 3-5 television programs at a time can be delivered from the USAM **34** to the subscriber household **35**. Accordingly, the subscriber has a STB **38** that is similar in functionality to the STB of a digital cable system **20** or DBS system **12**, except that when the subscriber changes channels such as by operating a remote control, the remote channel change signal is received by the STB **38** and transmitted upstream to the central office **22** which switches the channel for the subscriber and begins sending the newly selected channel to the household **35**. SDV systems **30** are essentially fully modern asynchronous two-way communication networks. Accordingly, the STB **38** can transmit information upstream over the same path used for the downstream signals. SDV systems **30** typically operate using an asynchronous transfer mode (ATM) protocol which is well-known in the networking arts.

[0019] **FIG. 2** is a block diagram showing the basic components of a STB **200** within which the present invention may be incorporated, whether it is for DBS, SDV, digital cable or any other system. The STB **200** includes an input port **202** for coupling to the input signal, e.g., a coaxial cable in the case of analog or digital cable TV, a telephone line in the case of SDV or an input cable from an antenna in the case of DBS. The television input signal may be analog or digital. Alternatively, the signal may be a video stream or multimedia stream such as a motion picture expert group (MPEG) signal from any communications network, such as the Internet. The STB **200** includes a system control unit (SCU) **204** which controls operation of the components of the STB **200**. The system control unit **204** essentially is a central processing unit (CPU) and may be any digital processing device, such as a microprocessor, finite state machine (FSM), digital signal processor (DSP), application specific integrated circuit (ASIC), general purpose computer, etc. The system control unit **204** receives commands from the subscriber, such as through infrared (IR) reception of commands from a handheld remote control unit (not shown) through an IR receiving circuit **208**. The SCU decodes the commands and forwards control signals to other circuits in the STB **200** in order to carry out the subscriber's commands, such as changing the channel. The STB **200** further includes a read only memory (ROM) **210** containing software and fixed data used for operating the STB **200**, and a random access memory (RAM) **212** for storing changeable data. Preferably, the STB **200** also includes a separate internal or external large memory device, such as a hard disk drive **214** or optical disk drive for storing the very large amounts of data that comprise digital multimedia data, e.g., television programs and advertisements. The SCU **204**,

RAM **212**, ROM **210** and hard disk **214** are coupled to a master bus **216** over which the units can communicate with each other.

[**0020**] The input signal from input port **202** is passed through a tuning circuit **218**. Under control of the system control unit **204**, the tuning circuit **218** selectively parses out the data corresponding to the particular channel selected by the viewer. That data is passed to a demodulator **220** that demodulates the data. A channel processing circuit **222** takes the demodulated channel data and processes it as needed. The necessary channel processing may comprise almost nothing to significant processing of the data depending on the particular form of the input data and the features of the STB **200** which would be familiar to persons of skill in the related arts. Exemplary functions that might be performed in the channel processing circuitry include decoding an encoded data stream (e.g., MPEG, Dolby Surround-Sound™) or inserting advertisements into the data stream in accordance with the present invention.

[**0021**] If received data is to be stored locally at the STB **200**, the channel processing circuit can pass the data to one of the memory devices **212** or **214** through the system control unit **204**.

[**0022**] The output of the channel processing circuit **222** typically is coupled to a demultiplexer **224** which separates the audio and video portions of the channel and forwards them to audio and video output ports **226** and **228**, respectively.

[**0023**] Tuner **218** and channel processing circuit **222** may be controlled by the system control unit **204**. However, the demodulator **220** and demultiplexer **224** may also need control.

[**0024**] Many STBs **200** also can transmit data upstream to the head end. Such STBs **200** would include a modulator **230** coupled to the system control unit **204** for modulating data generated in the system control unit **204** for transmission to the head end as well as an output port **232** for coupling a cable or other link to the head end. It will be understood by those of ordinary skill in the art that the input port **202** and output port **232** might comprise the same physical port.

[**0025**] A STB **200** for an SDV network typically would not include the tuner **218** since, as indicated above, since channel selection is not processed in the STB **200** but is merely transmitted to the USAM **34** for processing.

[**0026**] It also will be apparent to those of ordinary skill in the related arts that **FIG. 2** is a very high level depiction of the most basic components of an STB **200** and that other forms are possible.

[**0027**] The present invention utilizes targeted advertising wherein advertisements are matched to groups of subscribers (e.g., nodes in a cable television environment or to individual subscribers in switched digital video or streaming video environments). The actual formation of groups for targeted advertising is accomplished by creating multiple lists or tables (subgroups) of subscribers that share one or more subscriber characteristics. The subgroups may be based (1) geographic segmentation, (2) demographic segmentation, (3) psychological segmentation, (4) psychographic segmentation, (5) sociocultural segmentation, (6) use-related segmentation, (7) use-situation segmentation, (8) benefit segmentation, and (9) hybrid segmentation. More information may be found in a book entitled *Consumer Behavior,* by Leon G. Schiffman and Leslie Lazar Kanuk published by Prentice Hall, New Jersey 1999.

[**0028**] The analysis of different segmentations permit the advertisement to be directed to specific users or groups of users who fit certain criteria. For instance, an advertisement for a baby stroller could reach parents of children under five years old—and only those individuals in that group. The other publicly or privately available data regarding the subscribers may also be collected. This data may also be mined to form a subgroup of subscribers which has a common characteristic which matches the characteristics of the target group.

[**0029**] One technique for forming groups involves utilization of geographic location information. Each group may consist of subscribers located in a particular state, city, or associated with a cable television node. Another technique for forming groups is based on knowledge of the viewership of the actual programming. For example, many companies collect data related to the viewing of the television programming and such information may be used to form subgroups. Once such collection of data, known as Nielsen ratings, are based on samples of information related to the viewing of television programming. Other types of similar information are also available. The groups may be based on the actual viewership information, on an estimate of the current viewership, or on the statistical measurement of the viewership.

[**0030**] Once the targeted advertisements have been identified, the targeted advertisements may be delivered to the set-top in a low bandwidth channel or in a high-speed channel. These channels could be dedicated to ad delivery or could be shared, providing delivery channels for other services. The low bandwidth method of delivery would require that the ads be delivered (or begin being delivered) significantly in advance of ad presentation. Ads delivered via a high bandwidth channel could be delivered at or just prior to the time of presentation.

[**0031**] An example of such a dedicated channel may a broadcast high bandwidth ad channel. A service provider (i.e., DBS, cable, SDV, Multichannel Multipoint Distribution System (MMDS), and Local MDS (LMDS)) allocates and dedicates one or more "channels" of the system to be used for delivering advertisements. This channel, used for transporting ads, would be a high bandwidth (e.g., 6 MHz) channel, and would, in one embodiment, carry nothing but ads. In one embodiment, the operator would determine which ads were sent, but essentially ads would be continually sent to the STB, the STB being able to store, for subsequent display. The appropriate ads carried on this channel would be encoded and transported in the same way that the other programming content (on other channels) was encoded and transported. That is, if one were to "tune" to the ad channel, one would receive only conventional advertisements (normal video and audio).

[**0032**] In the case of analog video, the ads would be transmitted just as analog video is transmitted over the network. In the case of digital video, the ad would be encoded and transported in the same way as conventional programming. A 6 MHz channel could carry several digital ad channels just as several digital video channels are carried

within one 6 MHz channel. Moreover, other services (e.g. data) could be carried in the ad channel with the ads if desired.

[0033] **FIG. 3** shows several ways how a high bandwidth ad channel could be transmitted, digitally or in analog form. As shown in **FIG. 3, a** conventional analog dedicated 6 MHz channel **305** may be used to carry advertisements. Generally, the ad channel in this instance is a 6 MHz digital channel transmitted along with the programming, e.g., ABC (**301**), NBC (**303**).

[0034] One or more ad channels may be carried within a 6 MHz digital channel. **FIG. 3** shows a contiguous sequence of five advertisement channels within a dedicated digital ad channel **307**. The digital ad channel **307** may be transmitted along with a digital programming channel **309**. Furthermore, multiple digital ad channels may be carried within one 6 MHz digital channel and carried along with the programming (**311**).

[0035] Alternatively, a mixture of analog and digital may be chosen, e.g., an analog channel may be used to carry programming **313**, and a digital channel **315** carries the programming as well as the ad channel.

[0036] Ads can also be delivered to the STB via low and medium bandwidth channels as well and in a variety of formats (e.g., streaming media, MPEG-2, etc.) and protocols (ATM, IP, etc.) as will be evident to those skilled in the art. FIGS. **4A-4C** illustrate ad channels being sent on low-moderate bandwidth channels, both at constant bit rates and variable bit rates. An example as shown in **FIG. 4A**, of such low bandwidth channels would be a dedicated channel **401** in which the advertisements are continually sent but at a low bit rate, and ultimately stored as a complete advertisement file on the STB. In **FIG. 4A**, the time is shown at the X axis, and the bit rate is shown on the Y axis.

[0037] Another approach is the "trickle down" approach that allows ad delivery to the STB without requiring a dedicated high bandwidth ad channel, such a high bandwidth channel being available for other services (e.g., network programming).

[0038] In this scenario, network bandwidth demand (or bandwidth demand by one or more individual subscribers) is monitored in real-time or statistically predicted. As shown in **FIG. 4B**, the ad channel is delivered at a varying bit rate following the bandwidth demands of the system. For example, as bandwidth demanded by the system channel increases, the bandwidth allocated for transmitting the ad channel would proportionally reduce. Similarly, when the bandwidth demand for the system channel decreases, the available bandwidth for carrying the ad channel is increased. **FIG. 4B** illustrates a varying bandwidth ad channel **403** which is shown to fluctuate. Generally, ad channel **403** varies based on the bandwidth used by the system channel **405**. If the system channel (carrying programming and default advertisements) consumes more bandwidth, the bandwidth available to the ad channel is reduced. The sum of the ad channel bandwidth and the system channel bandwidth cannot exceed the maximum available. Such variable bit rate transmission schemes are well known to those skilled in the art.

[0039] Alternatively, advertisements could be delivered at "off-peak" times (i.e., when the overall demand for bandwidth is comparatively low). Bandwidth usage can be monitored and statistically predicted, either for the entire network, a sub-portion of the network, or an individual subscriber. By anticipating or predicting a period of decreased bandwidth demand (either network-wide or individually), the advertisement delivery would coincide with such decreased demand. Such a scenario would allow operators to conserve bandwidth during "peak" times for other services. In off-peak download, the ad channel can operate at comparatively high bandwidth. **FIG. 4C** illustrates an off-peak download ad channel **407**. It is to be noted that the off-peak download ad channel can be a medium to high bandwidth channel.

[0040] The methods described above are applicable to a variety of platforms including, but not limited to, MMDS, LMDS, DBS, digital and analog hybrid fiber coax (HFC) cable TV, and SDV.

[0041] Common to all these architectures are at least one forward channel and one return channel. The forward channel is used to deliver, among other things, the ads, metadata about the ads, and instructions regarding the ads. The forward channel can be high, moderate, or low bandwidth as described further above. The return path/channel is used for, among other things, communicating to the service provider various aspects regarding which ads are stored, timing and quantity of which ads have been played, which ads are scheduled for play, etc. Such information is critical to the "traffic and billing" (T&B) systems of the service provider. The return path, responsible for transmitting data, would typically be a low bandwidth channel.

[0042] Thus, the ad channel could be transported to a STB according to different broadband services and delivery platforms. In a preferred embodiment, the ad channel is a high bandwidth channel suitable for delivering acceptable quality video. However, the ad channel could be low or moderate bandwidth. Moreover, the ad channel could be intermittent. For example, the ad channel could be transmitted only during certain periods of low bandwidth demand (i.e., off-peak); or the ad channel could be sent in a "bursty" manner, that is, the ad channel would be transmitted at a varying bit rate depending on the instantaneous bandwidth demands of the system on which it is carried.

[0043] It is to be understood that each of the systems may generate their own ad channel (e.g., at the HE or CO or DBS uplink) or that each of these systems may receive one or more different ad channels. In the cases that any of these systems generate their own ad channel, ads would be delivered to the provider from the advertisers (or other party), stored on a local ad server, and used to create one or more ad channels to be sent to the STBs. In this scenario, ads could be delivered to the providers in many ways, including those mentioned, but also including storage media (e.g., a DVD sent via Federal Express). Generally, the HE/CO receives, stores, and processes subscriber profiling information, and receives and stores ads and associated metadata. The subscriber grouping server and ad grouping server forms groups of subscribers (or assigns a node or cell to a group) and groups of ads respectively. Appropriate ad channels (matching ad groups to subscriber groups) are formed and sent to the STB. Input is also received from Traffic and Billing databases regarding which ads to send where and which metadata/instructions to send with each ad or channel.

STB records are sent upstream to the T&B, and STB click stream data can also be sent for profiling purposes.

[0044] In the case of the DBS platform, one embodiment is that of the ad channel being uplinked to the DBS provider satellite which then downlinks the ad channel to the subscriber STB. The subscriber has a satellite dish and a receiver for decoding the transmission. The return path in the DBS case is typically the conventional telephone line (POTs) which runs from the subscriber's home or business back to the DBS provider's central office (or other processing facility). The ad channel is transmitted via satellite to the STB. Metadata and instructions regarding the ad channel and ads can also be transmitted by the satellite, embedded in the ad channel or separate from it. However, these data can also be sent over the telephone line (i.e., forward path). A trickle down forward channel to deliver the ads to the STB could also be performed via the twisted wire pair using the "POTS" (Plain Old Telephone System) line. Data from the STB is transmitted to the DBS provider on the telephone return path.

[0045] In an alternate and preferred embodiment, the system is a hybrid DBS/DSL system. The STB supports both DBS signal reception as well as DSL functionality. The DSL service would for example be provided over twisted wire pair to the home. In this embodiment conventional TV programming is received via the DBS signal, whereas other services are sent downstream to the STB via the DSL channel. Such other services may include a high, moderate, and low bandwidth ad channel delivered to the STB for storage and display. Metadata and other instructions regarding the ads (e.g. storage, scheduling, grouping, etc.) could also be provided via the DSL channel. The DSL channel could also be used as the return path for, inter alia, sending anonymous transaction profiles and ad scheduling/transactions (e.g., display) information. Such DBS/DSL systems would also allow for enhanced services where high-bandwidth uploads/requests are required such as Interactive TV.

[0046] In the case of the hybrid fiber-coax (HFC) cable system, a Head End (HE) receives the ad channel either via a satellite downlink (e.g., HITs) or land based connection (e.g., Internet/WAN or LAN). In one embodiment, this ad channel is then sent to the STB via the HFC plant on a high bandwidth video channel. The HFC plant comprises, for each node, a fiber from the HE to the node which comprises an O/E transducer transmitting onto coax feeder cables, and then drops to the CPE STB. In another embodiment, the ad channel is sent over a DOCSIS channel. Metadata, instructions, and other data associated with the ad can be sent over these channels (embedded with the ad or separate) or over other channels (e.g., low bandwidth). The conventional return path (e.g., <50 MHz) can be used by the STB to send data re the ads (as described above). A POTS line could also be used in the event two-way cable service is not realized or desired. As described further herein, a HE could generate its own ad channels. In this scenario, the HE would be able to direct different ad channels to one or more of its cable nodes (O/E). This would prove advantageous, in that one or more ad channels corresponding to one or more specific target groups (nodes) could be created and sent to their appropriate node(s). Each STB serviced by that node would receive and store all ads on its ad channel, and thus would not need to filter the ads since each ad received on the ad channel would be appropriate for that STB. The HE would typically have its own ad server with which to generate the ad channels, but could also do the filtering of incoming ad channel(s) creating separate ad channels (e.g., for each node) "on-the-fly."

[0047] In the case of the SDV platform, the Central Office (CO) receives the ad channel either via a satellite downlink (e.g., HITs) or land based connection (e.g., Internet/WAN or LAN). The ad channel would either be received by the CO as ATM, or the CO would ATM encode the ad channel prior to distribution to the STB. The ad channel would be transported to the STB using the ATM protocol. In one embodiment, the ad channel is sent to the STBs via a fiber-to-the-curb (FTTC), fiber-to-the-building (FTTB) or fiber-to-the-neighborhood (FTTN) network, which terminates at an Optical Network Unit (BNU) with an O/E converter, and from the BNU over twisted wire pair (twp) drops to each home or business STB. The metadata and instructions would be sent either embedded in the ad or separate from it with the appropriate associating links. The return path for communication by the STB to the CO could be over the same plant on a low bandwidth return channel. Another embodiment of SDV is that of VDSL (very high speed DSL). In this system, fiber runs from the CO broadband digital terminal (BDT) to one or more universal service access multiplexers (USAM) and then from the USAM to one or more residences over conventional twisted wire pair telephone wire.

[0048] As described further herein, a CO implementing the SDV platform could generate its own ad channels. In one scenario, because the ATM switching occurs at the CO, the CO would be able to direct different ad channels (i.e., on different VPI/VCIs) to one or more of its subscribers STB. This would prove advantageous, in that one or more ad channels corresponding to one or more specific target groups (subscribers or groups of subscribers) could be created and sent to the appropriate subscriber or group of subscribers. Each STB instructed to tune to a particular ad channel (VPI/VCI) would receive and store all ads on its ad channel, and thus would not need to filter the ads since each ad received on the ad channel would be appropriate for that STB. The CO would typically have its own ad server with which to generate the ad channels, but could also do the filtering of incoming ad channel(s) creating separate ad channels (VPI/VCIs) "on-the-fly." In both described SDV embodiments, the ad channel (or individual ads themselves) could be sent over low or moderate bandwidth channels, or in an intermittent manner (e.g., on bursty channel or during off-peak times).

[0049] In the case of Local Multipoint Distribution Service LMDS (or MMDS), the LMDS Head End or Central Office receives the ad channel from an ad channel source, or alternatively, generates one or more of its own ad channels. In either case, and in one embodiment, this ad channel is then sent to the STB by transmitting it to the local LMDS Cell (i.e., the local LMDS broadcast tower). The LMDS transmitter tower sends the channel to STBs within the local "cell" (typically 500-2000 residences). This is a wireless transmission using either QPSK or QAM modulation. The channel is received at the residence or business via a small dish antenna, and is decrypted and decoded by a receiver. Metadata, instructions, and other data associated with the ad can be sent, embedded with the ad or separate and/or over other channels (e.g., low bandwidth). The return path for LMDS would be over the same wireless path using a Media Access Control (MAC) protocol. A POTS line could also be

used as a return path in the event two-way service is not realized or desired (e.g., MMDS).

[0050] As described further herein, a LMDS HE could generate its own ad channels. In this scenario, the HE would be able to direct different (i.e., customized) ad channels to one or more of its broadcast towers. This would prove advantageous; in that one or more ad channels corresponding to one or more specific target groups (broadcast cells) could be created and sent to their appropriate cell(s). Each STB serviced by that cell would receive and store all ads on its ad channel, and thus would not need to filter the ads since each ad received on the ad channel would be appropriate for that STB. The HE would typically have its own ad server with which to generate the ad channels, but could also do the filtering of incoming ad channel(s) creating separate ad channels (e.g., for each cell) "on-the-fly." A Hybrid LMDS/DSL system could also be used to deliver the ad channels (see above under DBS/DSL).

[0051] Although this invention has been illustrated by reference to specific embodiments, it will be apparent to those skilled in the art that various changes and modifications may be made which clearly fall within the scope of the invention. The invention is intended to be protected broadly within the spirit and scope of the appended claims.

What is claimed is:

1. In a television network environment, a method for delivering targeted advertisements to one or more subscribers, the method comprising:

selecting one or more targeted advertisements to be transmitted to a group of subscribers;

organizing the selected advertisements in an advertisement (ad) channel; and

transmitting the ad channel to subscriber equipment.

2. The method of claim 1, wherein the ad channel is a high-speed channel.

3. The method of claim 1, wherein the ad channel is a 6 MHz analog channel.

4. The method of claim 3, wherein the targeted advertisements are transmitted as analog video.

5. The method of claim 1, wherein the ad channel is a 6 MHz digital channel.

6. The method of claim 1, wherein the targeted advertisements are encoded and transmitted as conventional programming.

7. The method of claim 1, wherein a plurality of ad channels are transmitted within a single 6 MHz digital channel.

8. The method of claim 1, wherein the ad channel shares bandwidth with other channels within a single 6 MHz digital channel.

9. The method of claim 1, wherein a plurality of digital ad channels are transmitted along with a plurality of digital video signals within one 6 MHz channel.

10. The method of claim 1, wherein the ad channel is a constant bit rate dedicated channel.

11. The method of claim 1, wherein the ad channel is a variable bit dedicated channel.

12. The method of claim 1, wherein the ad channel fluctuates responsive to a system channel.

13. The method of claim 12, wherein the system channel is a programming channel.

14. The method of claim 13, wherein bandwidth supplied to the ad channel is inversely proportional to bandwidth used by the programming channel.

15. The method of claim 1, wherein the ad channel is an off-peak download channel.

16. The method of claim 15, wherein the off-peak download channel is a high bandwidth channel.

* * * * *