UNITED STATES PATENT AND TRADEMARK OFFICE

BEFORE THE PATENT TRIAL AND APPEAL BOARD

FREEWHEEL MEDIA, INC.,
Petitioner,

v.

ALMONDNET, INC.,
Patent Owner.

Patent No. 7,861,260
Filing Date: April 17, 2007
Issue Date: December 28, 2010
Title: TARGETED TELEVISION ADVERTISEMENTS BASED ON ONLINE BEHAVIOR

Inter Partes Review No.: IPR2024-00423

DECLARATION OF DAVID B. LETT IN SUPPORT OF PETITION FOR *INTER PARTES* REVIEW OF U.S. PAT. NO. 7,861,260

TABLE OF CONTENTS

I. INTRODUCTION 1
II. PROFESSIONAL BACKGROUND AND QUALIFICATIONS 1
III. MATERIALS REVIEWED 7
IV. UNDERSTANDING OF APPLICABLE LEGAL STANDARDS 7
V. OVERVIEW OF THE ’260 PATENT 11
VI. PROSECUTION HISTORY 18
VII. RELATED LITIGATION 25
A. ’398 IPRs 32
B. ’878 IPRs 34
C. ’164 IPRs 36
D. ’069 IPR 37
E. ’198 IPRs 38
VIII. TECHNICAL BACKGROUND 40
A. Targeted Digital Advertising 40
B. Methods for Delivery of Targeted Advertisements 44
C. Network Address Translation 49
IX. OVERVIEW OF THE RELIED UPON PRIOR ART 50
A. US Pat. No. 8,180,674 (“Madhavan”) 50
B. US Pat. App. Pub. No. 2006/0039386 (“Park”) 54
C. US Pat. App. Pub. No. 2004/0003292 (“Kato”) 57
D. US Pat. App. Pub. No. 2008/0120178 (“Martinez”) 60
E. US Pat. No. 7,653,923 (“Flickinger923”) 64
F. US Pat. App. Pub. No. 2005/0096978 (“Black”) 65
G. US Pat. No. 7,376,714 B1 (“Gerken”) 67
H. US Pat. App. Pub. No. 2005/0096980 (“Koningstein”) 68
I. US Pat. No. 5,740,252 (“Minor”) 70
J. US Pat. App. Pub. No. 2008/0201731 (“Howcroft”) 71

K. US Pat. App. Pub. No. 2007/0206773 ("Branam") 72

X. THE RELEVANT ART AND LEVEL OF ORDINARY SKILL IN THE RELEVANT ART 73

XI. CLAIM CONSTRUCTION 75

XII. ANALYSIS.....75

A. Grounds A-B: Madhavan in view of Park and/or Madhavan in view of Park and Kato 78

1. Independent Claim 1 83

2. Independent Claim 61: "A method implemented using a programmed hardware computer system, the method comprising: (a) for each of a multitude of users, with the computer system, electronically associating an online user interface device identifier, which indicates an online user interface device of the user, and a set-top box identifier, which indicates a set-top box of that user, which electronic association is based on a common IP address, wherein network traffic is routed via the common IP address to both the online user interface device and the set-top box of that user; and (b) using user profile information derived from online activity from the online user interface device of a first user of the multitude of users via a first online access IP address, with the computer system automatically causing a first television advertisement to be directed to a set-top box for presentation via that set-top box, selectively, wherein the set-top box is indicated by the set-top box identifier associated with the online user interface device identifier of the first user's online user interface device." 139

3. Dependent Claim 2: "The method of claim 1 wherein neither the user profile information in part (b) nor the association between the first online access IP address and its associated set-top box IP address includes personally identifiable information." 140

4. Dependent Claim 80: "The method of claim 61 wherein neither the user profile information in part (b) nor the association between the online user interface device

identifier and the set-top box identifier includes personally identifiable information.” 145

5. Dependent Claim 3: “The method of claim 1 (i) further comprising, using user profile information derived from online activity from a second online user interface device via a second one of the online access IP addresses of the multitude of users, with the computer system automatically causing a second television advertisement to be directed to a second set top box for presentation via that set-top box, selectively, wherein the second set-top box is indicated by the set-top box IP address associated with the second online access IP address (ii) wherein which television advertisement is directed to or presented via which set-top box depends on differences between the online activities from the first and second online user interface devices, respectively.” 145

6. Dependent Claim 83: “The method of claim 61: (i) further comprising, using user profile information derived from online activity from the online user interface device of a second user of the multitude of users via a second online access IP address, with the computer system, automatically causing a second television advertisement to be directed to a second set-top box for presentation via that set-top box, selectively, wherein the second set-top box is indicated by the set-top box identifier associated with the online user interface device identifier of the second user's online user interface device, and (ii) wherein which television advertisement is directed to or presented via which set-top box depends on differences between the online activities from the online user interface devices of the first and second users, respectively.” 151

7. Dependent Claim 4: “The method of claim 3 wherein neither the user profile information in part (i) nor the association between the second online access IP address and its associated set-top box IP address includes personally identifiable information.” 151

8. Dependent Claim 84: “The method of claim 83 wherein neither the user profile information in part (i) nor the

association between the second online user interface device identifier and its associated set-top box identifier includes personally identifiable information." 152

9. Dependent Claim 5: "The method of claim 1 further comprising storing in the computer system electronic associations between the online access IP addresses and the set-top box IP addresses." 153

10. Dependent Claim 6: "The method of claim 1 wherein the online activity comprises requesting a search." 156

11. Dependent Claim 85: "The method of claim 61 wherein the online activity comprises requesting a search." 157

12. Dependent Claim 7: "The method of claim 1 wherein the first television advertisement is caused to be directed to the set-top box upon first being contacted by the set-top box after the user profile information is derived." 157

13. Dependent Claim 86: "The method of claim 61 wherein the first television advertisement is caused to be directed to the set-top box upon first being contacted by the set-top box after the user profile information is derived." 160

14. Dependent Claim 8: "The method of claim 1 wherein the first television advertisement is selected from among a plurality of possible television advertisements based at least in part on the user profile information derived from the online activity from the first online access IP address." 160

15. Dependent Claim 87: "The method of claim 61 wherein the first television advertisement is selected from among a plurality of possible television advertisements based at least in part on the user profile information derived from the online activity from te first online access IP address." 163

16. Dependent Claim 9: "The method of claim 8 wherein the first television advertisement is selected based at least partly on demographic or behavioral attributes included in the user profile information." 163

17. Dependent Claim 88 164

18. Dependent Claim 12: "The method of claim 1 further comprising: (i) receiving at the computer system an identifier corresponding to the set-top box of the user; and (ii) with the computer system causing the television advertisement to be transmitted only if directed to the set-top box corresponding to the identifier." 165

19. Dependent Claim 13: "The method of claim 1 wherein part (a) comprises the act of storing the common IP address, and further comprising updating the common IP address of the user." 169

20. Dependent Claim 92: "The method of claim 61 wherein part (a) comprises the act of storing the common IP address, and further comprising updating the common IP address of the user." 170

21. Dependent Claim 14: "The method of claim 1 wherein part (a) comprises the act of storing the common IP address, and further comprising periodically updating the common IP address of the user." 170

22. Dependent Claim 93: "The method of claim 92 wherein part (a) comprises the act of storing the common IP address in the computer system, and further comprising periodically updating the common IP address of the user." 171

23. Dependent Claim 91: "The method of claim 61 further comprising the computer system: (i) receiving an identifier corresponding to the set-top box of the user; and (ii) causing the television advertisement to be transmitted only if directed to the set-top box corresponding to the identifier." 172

24. Dependent Claim 17: "The method of claim 1 wherein the computer system is a central ad server and the first television advertisement is received at the central ad server and directed to the set-top box." 172

25. Dependent Claim 96: "The method of claim 61 wherein the computer system is a central ad server and the first television advertisement is received at the central ad server and directed to the set-top box." 173

26. Dependent Claim 18: "The method of claim 1 wherein part (b) comprises, with the computer system, directing instructions to a profile provider, to an online site, or to an independent ad server to direct the first television advertisement to the set-top box." 174

27. Dependent Claim 97: "The method of claim 61 wherein part (b) comprises, with the computer system, directing instructions to a profile provider, to an online site, or to an independent ad server to direct the first television advertisement to the set-top box." 176

28. Dependent Claim 21: "The method of claim 1 wherein the computer system causes the first television advertisement to be directed without a request for advertisements originating from the user's set-top box."....177

29. Dependent Claim 100: "The method of claim 61 wherein the computer system causes the first television advertisement to be directed without a request for advertisements originating from the user's set-top box." 178

30. Dependent Claim 22: "The method of claim 1 wherein the online access IP address of each user is an IP address associated with a modem or router used by that user for online access."....178

31. Dependent Claim 101: "The method of claim 61 wherein the online access IP address of each user is an IP address associated with a modem or router used by that user for online access."....180

32. Dependent Claim 44: "The method of claim 1 wherein the first online access IP address and the common IP address are the same."....180

33. Dependent Claim 62 182

34. Dependent Claim 45: "The method of claim 1 wherein the first online access IP address and the common IP address differ."....182

35. Dependent Claim 63 184

36. Dependent Claim 46: "The method of claim 45 wherein the first online access IP address and the set-top box IP

address are associated based on online access by the first user's online user interface device via a second online access IP address." 184

37. Dependent Claim 64 188

38. Dependent Claim 47: "The method of claim 46 wherein the second online access IP address and the common IP address are the same." 189

39. Dependent Claim 65 190

40. Dependent Claim 48: "The method of claim 45 wherein the first online access IP address and the set-top box IP address are associated based on a correlation between the common IP address and an online user interface device identifier that indicates the user's online user interface device." 190

41. Dependent Claim 52: "The method of claim 1 wherein the set-top box is further indicated by a set-top box identifier that includes a device MAC address or a portion thereof." 192

42. Dependent Claim 68 193

43. Dependent Claim 54: "The method of claim 1 wherein the common IP address is determined by the computer system by matching the first online access IP address with a set-top box IP address used by a uniquely identified set-top box both before and after the online activity occurs." 194

44. Dependent Claim 75 197

45. Dependent Claim 55: "The method of claim 1 wherein the first online access IP address and the set-top box IP address are associated before the online activity occurs." 197

46. Dependent Claim 76 199

47. Dependent Claim 56: "The method of claim 1 wherein the first online access IP address and the set-top box IP address are not associated until after the online activity occurs." 200

48. Dependent Claim 77 202

49. Dependent Claim 57: "The method of claim 1 further comprising, with the computer system, automatically

deriving the user profile information from the online activity performed from the first online access IP address." 202

50. Dependent Claim 78 203

51. Dependent Claim 58: "The method of claim 1 further comprising, with the computer system, automatically selecting the first television advertisement based on the user profile information." 204

52. Dependent Claim 79: "The method of claim 61 further comprising automatically selecting the first television advertisement based on the user profile information." 206

53. Dependent Claim 59: "The method of claim 1 wherein: (i) the computer system is under control of an entity that operates independently of a provider of television service to each of the multitude of users through the corresponding set-top box; and (ii) the computer system causes the first television advertisement to be directed in part (b) without transmitting user online behavioral profile information to the provider of television service. 206

54. Dependent Claim 81 209

55. Dependent Claim 60: "The method of claim 59 wherein the online access and set-top box IP addresses are associated in part (a), and the first television advertisement is caused to be directed in part (b), without receiving personally identifiable information from the provider of television service." 210

56. Dependent Claim 82 214

57. Dependent Claim 71: "The method of claim 61 wherein the online user interface device identifier includes the first online access IP address." 214

58. Dependent Claim 72: "The method of claim 61 wherein the set-top box identifier includes the common IP address." 216

59. Dependent Claim 73: "The method of claim 61 wherein the set-top box identifier includes at least a portion of the common IP address." 218

60. Dependent Claim 74: "The method of claim 61 wherein the set-top box identifier includes a set-top box IP address." 218

B. Grounds C-D: Madhavan in view of Park and Martinez and/or Madhavan in view of Park, Kato, and Martinez 220

1. Independent Claim 26: "A method implemented using computer equipment, the method comprising: (a) with the computer equipment, automatically electronically delivering electronic user profile information to a computer system that includes a server that electronically associates, for each of a multitude of users, an online access IP address of the user and a set-top box IP address of that user based on a common IP address, (b) wherein network traffic is routed via the common IP address for both an online user interface device and a set-top box of that user, (c) wherein delivered user profile information of a first user of the multitude of users (i) is derived from online activity of the first user from a first online user interface device via a first online access IP address and (ii) includes identification of the first online access IP address and the time and date of the online activity, and (d) as a result of which delivery, a first television advertisement can be directed to a set-top box for presentation via that set-top box, selectively, wherein the set-top box is indicated by the set-top box IP address that the server associates with the first online access IP address." 220

2. Independent Claim 38: "A method implemented using computer equipment, the method comprising: (a) with the computer equipment, automatically electronically delivering electronic user profile information to a computer system that includes a server that electronically associates, for each of a multitude of users, an online user interface device identifier, which indicates an online user interface device of the user, and a set-top box identifier, which indicates a set-top box of that user, which electronic association is based on a common IP address, (b) wherein network traffic is routed via the common IP address for both the online user interface device and the set-top box of that user, (c) wherein delivered user profile information of

a first user of the multitude of users (i) is derived from online activity of the first user from the first user's online user interface device via a first online access IP address and (ii) includes identification of the first online IP address and the time and date of the online activity, and (d) as a result of which delivery, a first television advertisement can be directed to a set-top box for presentation via that set-top box, selectively, wherein the set-top box is indicated by the set-top box identifier that the server associates with the online user interface device identifier of a first user's online user interface device." 241

3. Dependent Claim 15: "The method of claim 1 wherein: (i) the user profile information in part (b) includes a list of online access IP addresses corresponding to specific online activities and times and dates corresponding to each of the online activities; and (ii) the computer system causes the television advertisement to be directed to the set-top box of one of the users only if any of the listed online access IP addresses corresponding to the specific online activities and the corresponding dates and times of the online activities match the common IP address assigned to that user and the date and time corresponding thereto." 242

4. Dependent Claim 94: "The method of claim 61 wherein: (i) the user profile information in part (b) includes a list of online access IP addresses corresponding to specific online activities and times and dates corresponding to each of the online activities; and (ii) the computer system causes the television advertisement to be to be directed to the set-top box of one of the users only if any of the listed online access IP addresses corresponding to the specific online activities and the corresponding dates and times of the online activities match the common IP address assigned to that user and the date and time corresponding thereto." 246

5. Dependent Claim 16: "The method of claim 15 wherein part (a) comprises the act of storing the common IP address and dates and times corresponding thereto in the computer system, and further comprising, with the

computer system, periodically updating (i) the common IP address and times and dates corresponding thereto or (ii) the list of online access IP addresses corresponding to specific online activities and time and dates corresponding to each of the online activities.”.....246

6. Dependent Claim 95: “The method of claim 94 wherein part (a) comprises the act of storing in the computer system the common IP address and dates and times corresponding thereto, and further comprising periodically updating (i) the common IP address and times and dates corresponding thereto or (ii) the list of online access IP addresses corresponding to specific online activities and time and dates corresponding to each of the online activities.” 249

7. Dependent Claim 24: “The method of claim 1 further comprising receiving a revenue amount as a result of directing the advertisement.” 249

8. Dependent Claim 25: “The method of claim 1 further comprising paying a revenue amount to a profile provider as a result of using the user profile information in part (b).” 253

9. Dependent Claim 104: “The method of claim 61 further comprising paying a revenue amount to a profile provider as a result of using the user profile information in part (b).” 256

10. Dependent Claims 27 and 148 257

11. Dependent Claim 28: “The method of claim 26:” 257

12. Dependent Claim 151: “The method of claim 38: (e) wherein delivered user profile information of a second user of the multitude of users (i) is derived from online activity of the second user from the second user's online user interface device via a second online access IP address and (ii) includes identification of the second online access IP address and the time and date of the online activity, (f) as a result of which delivery, a second television advertisement, different from the first television advertisement, is directed to a second set-top box for

presentation via that set-top box, selectively, wherein the second set-top box is indicated by the set-top box identifier that the server associates with the second online user interface device identifier of the second user's online user interface device, for selective presentation via that set-top box, and (g) wherein which television advertisement is directed to or presented via which set-top box depends on differences between the online activities from the first and second online user interface devices, respectively." 264

13. Dependent Claim 29: "The method of claim 26 further comprising receiving a revenue amount from a proprietor of the computer system as a result of the electronic delivering act." 264

14. Dependent Claim 31: "The method of claim 26 further comprising, with the computer equipment, automatically selecting the first television advertisement based on the user profile information." 266

15. Dependent Claims 32 and 145 267

16. Dependent Claims 34, 42, and 103 269

17. Dependent Claims 39 and 147 270

18. Dependent Claim 33: "The method of claim 26 further comprising receiving a revenue amount from a provider of the television advertisement as a result of electronically delivering the user profile information." 271

19. Dependent Claim 35: "The method of claim 26 further comprising, with the computer equipment, electronically delivering the first television advertisement to the computer system for subsequent direction to the set-top box." 272

20. Dependent Claim 36: "The method of claim 26 further comprising, with the computer equipment, directing the television advertisement to the set-top box in response to instructions received from the computer system." 275

21. Dependent Claim 37: "The method of claim 26 wherein the step of delivering user profile information comprises delivering the first user online access IP address." 276

22. Dependent Claim 40: "The method of claim 39 wherein (i) the step of delivering electronic user profile information derived from the online activity comprises, with the computer equipment, delivering the first user online access IP address; and (ii) the selection of a television advertisement is based on user profile information that is not delivered to the computer system." 278

23. Dependent Claims 106 and 128 280

24. Dependent Claims 107 and 129 280

25. Dependent Claims 108 and 130 281

26. Dependent Claims 109 and 131 281

27. Dependent Claim 110: "The method of claim 107 wherein the first online access IP address and the set-top box IP address are associated based on a correlation between the common IP address and an online user interface device identifier that indicates the user's online user interface device."....282

28. Dependent Claims 114 and 134 282

29. Dependent Claims 116 and 141 283

30. Dependent Claims 117 and 142 283

31. Dependent Claims 118 and 143 284

32. Dependent Claims 119 and 144 284

33. Dependent Claim 120: "The method of claim 31 wherein the first television advertisement is selected based at least partly on a specific search request, which request has originated from the first online user interface device." 285

34. Dependent Claim 121: "The method of claim 34 wherein the revenue amount is received from an advertiser that has contracted to display a TV ad to persons who have characteristics contained in the user profile information."....286

35. Dependent Claim 122: "The method of claim 121 further comprising, with the computer equipment, automatically selecting the first television advertisement based on the user profile information."....288

36. Dependent Claims 123 and 149 288

37. Dependent Claims 124 and 150 289

38. Dependent Claims 125 and 152 289

39. Dependent Claim 126: "The method of claim 39 wherein the user profile information derived from the online activity comprises an indication of a search request originating from the online user interface device of the first user." 290

40. Dependent Claim 137: "The method of claim 38 wherein the online user interface device identifier includes the first online access IP address." 291

41. Dependent Claim 138: "The method of claim 38 wherein the set-top box identifier includes the common IP address." 292

42. Dependent Claim 139: "The method of claim 38 wherein the set-top box identifier includes at least a portion of the common IP address." 292

43. Dependent Claim 140: "The method of claim 38 wherein the set-top box identifier includes a set-top box IP address." 293

44. Dependent Claim 146: "The method of claim 42 wherein the revenue amount is received from an advertiser that has contracted to display a TV ad to an audience of an Internet site." 293

C. Grounds E-F: Madhavan in view of Park and Flickinger923 and/or Madhavan in view of Park, Kato, and Flickinger923 295

1. Dependent Claim 19: "The method of claim 1 wherein part (b) comprises, with the computer system, directing instructions to the set-top box to retrieve the first television advertisement from a profile provider, from an online site, or from an independent ad server." 295

2. Dependent Claim 20: "The method of claim 1 wherein the computer system causes the first television advertisement to be directed only in response to a request for advertisements originating from the user's set-top box." 297

3. Dependent Claims 98 and 99 299

D. Grounds G-H: Madhavan in view of Park and Black and/or Madhavan in view of Park, Kato, and Black 300

1. Dependent Claim 10: "The method of claim 1 wherein the first television advertisement is selected from among a plurality of possible television advertisements based at least in part on the television content viewed at the time the first television advertisement is to be presented by the set-top box." 300

2. Dependent Claim 89: "The method of claim 61 wherein the first television advertisement is selected from among a plurality of possible television advertisements based at least in part on the television content viewed at the time the first television advertisement is to be presented by the set-top box." 306

E. Ground I: Madhavan in view of Park, Kato, and Gerken 306

1. Dependent Claim 11: "The method of claim 1 wherein the common IP address is an IP address dynamically assigned to a modem or router used by the user for online access and connected to the user's set-top box." 306

2. Dependent Claim 90: "The method of claim 61 wherein the common IP address is an IP address dynamically assigned to a modem or router used by the user for online access and connected to the user's set-top box." 310

F. Grounds J-K: Madhavan in view of Park, Martinez, and Koningstein and/or Madhavan in view of Park, Kato, Martinez, and Koningstein.....311

1. Dependent Claim 30: "The method of claim 26 further comprising receiving a revenue amount as a result of the electronic delivering act, wherein the revenue amount is received in response to each instance in which revenue is generated as a result of presenting the selected television advertisement via the set-top box indicated by the set-top box IP address associated with the first online access IP address." 311

2. Dependent Claim 43: "The method of claim 42 wherein the revenue amount is received in response to each instance in which revenue is generated as a result of

displaying the selected television advertisement via the set-top box indicated by the set-top box identifier associated with the online user interface device identifier of the first user's online user interface device." 315

G. Grounds L-M: Madhavan in view of Park, Martinez, and Minor and/or Madhavan in view of Park, Kato, Martinez, and Minor 317

1. Dependent Claim 105: "The method of claim 26 wherein automatically electronically delivering comprises, with the computer equipment, redirecting the user's online user interface device to a server of the computer system." 317

2. Dependent Claim 127: "The method of claim 38 wherein automatically electronically delivering comprises, with the computer equipment, redirecting the user's online user interface device to the computer system." 321

3. Dependent Claim 41: "The method of claim 38 wherein the step of delivering electronic user profile information derived from the online activity comprises, with the computer equipment, redirecting the first user's online user interface device during the first user's accessing of an online site via the first online access IP address." 322

H. GROUND N-O: Madhavan in view of Park and Howcroft and/or Madhavan in view of Park, Kato, and Howcroft 326

1. Dependent Claim 23: "The method of claim 1 wherein only advertisements satisfying criteria selected by each user are directed to the set-top box of that user." 326

2. Dependent Claim 102: "The method of claim 61 wherein only advertisements satisfying criteria selected by each user are directed to the set-top box of that user." 328

3. Dependent Claim 49: "The method of claim 48 wherein the online user interface device identifier includes a cookie." 329

4. Dependent Claim 66 332

5. Dependent Claim 50: "The method of claim 48 wherein the online user interface device identifier includes a tag." 332

6. Dependent Claim 70 333

I. GROUNDS P-Q: Madhavan in view of Park, Martinez, and Howcroft and/or Madhavan in view of Park, Kato, Martinez, and Howcroft 334

1. Dependent Claims 111 and 132 334

2. Dependent Claims 112 and 136 334

J. GROUND R-S: Madhavan in view of Park and Branam And/or Madhavan in view of Park, Kato and Branam 335

1. Dependent Claim 51: "The method of claim 1 wherein the set-top box is further indicated by a set-top box identifier that includes a device serial number or a portion thereof." 335

2. Dependent Claim 67 338

3. Dependent Claim 53: "The method of claim 1 wherein the set-top box is further indicated by a set-top box identifier that includes a username, a pseudonym, or a confirmation number." 339

4. Dependent Claim 69 343

K. GROUND T-U: Madhavan in view of Park, Martinez, and Branam and/or Madhavan in view of Park, Kato, Martinez, and Branam 343

1. Dependent Claims 113 and 133 343

2. Dependent Claims 115 and 135 344

XIII. EVIDENCE OF NON-OBVIOUSNESS 344

XIV. CONCLUSION 346

Appendix A A-1
Appendix B B-1
Appendix C C-1

I, David Lett, declare that I have personal knowledge of the facts set forth in this declaration and, if called to testify as a witness, could and would do so competently.

I. INTRODUCTION

1. I have been retained as an expert witness on behalf of the Petitioner, Freewheel Media, Inc., for the above-referenced *inter partes* review proceeding.

2. I have been asked to provide a declaration with my opinions regarding certain matters pertaining to the patentability of U.S. Patent No. 7,861,260 ("the '260 Patent"). I understand that the '260 Patent is owned by AlmondNet, Inc. ("Patent Owner").

3. I am being compensated at my usual consulting rate for my work on this matter. My compensation is in no way dependent upon my opinions or testimony or the outcome of this proceeding. I have no financial interest in the parties or in the outcome of this proceeding.

II. PROFESSIONAL BACKGROUND AND QUALIFICATIONS

4. I am a technical consultant and product development industry veteran with expertise in electronics, software, hardware, video, audio, and data communications, having led product development organizations in cable, satellite, consumer electronics, asset tracking, remote tank logistics, and alarm industries. My current curriculum vitae is attached as Exhibit 1103 and some highlights follow.

5. I earned my B.S. in Electrical Engineering (1982) with high honors from the University of Tennessee in Knoxville, Tennessee. I also attended the Georgia Institute of Technology from 1986 to 1987, completing 40% of the required degree hours for the M.S. Electrical Engineering program.

6. From 1982 to 1985, I worked at Scientific Atlanta as an Electrical Engineer designing video, audio, and data communications equipment for the cable television industry. I designed software and hardware including addressable data transmitters, video sync suppression scramblers, transaction format converters, and data channel monitors for addressable Cable Television systems and Set-top boxes.

7. From 1983 to 1985, while working at Scientific Atlanta, I also worked as an Assistant Professor at DeVry Institute of Technology, teaching courses in electronics and microprocessor hardware/software.

8. From 1985 to 1990, I worked at Wegener Communications as a Senior Electrical engineer, designing satellite communications equipment including forward error correction (FEC) coding systems, PSK modems, and analog control systems for RF modulators and PSK demodulators. I was promoted to the Hardware Engineering Manager, where I managed product development of video, audio, and data satellite receivers, modulators, graphics display systems, DSP-based compandors, FSK and PSK satellite modems, multiplexers, forward error correction

(FEC) codecs, RF upconverters and downconverters, and baseband analog and digital processing components.

9. In 1990, I returned to Scientific Atlanta, which was acquired by Cisco in 2006. I worked as Engineering Manager running the set-top box engineering group where I was promoted to Director and Vice President during my tenure until 2011. I led the design of many cable set-top boxes and systems through the evolution of analog video, addressability, downloadable software, electronic program guides, digital video, VOD, software applications, high-definition TV, DVR, DOCSIS, full spectrum tuners, and multiroom DVR. These systems implemented various technologies including DOCSIS 1/2/3 and hybrid gateways, 802.11, IPTV, DVR, cable modems, ADSL, VDSL, DVB-T/C/S, bootloaders, factory diagnostics, application frameworks, Nagra, DRMs, conditional access, secure microprocessors, device management, Android, Adobe Flash, Linux, DVD play/record, MPEG-4, MPEG-2, H.264, NTSC, PAL, DAVIC, MoCA, high-performance CPUs, cablecards, network processors, HDMI, multiple video/audio display interfaces, 2D/3D graphics, multiple RF tuners, and full spectrum tuners.

10. From 2011 to 2016, I worked for EchoStar Technologies, which served as the product development organization for sister company DISH Network. I served as Vice President of Engineering and was the Head of the Atlanta research and development center. I led the development of satellite set-top boxes, consumer

electronic equipment, and a home automation and security system. Technologies used included video/audio, IoT, H.265, HEVC, 3D, Satellite, wireless, MoCA, transcoding, embedded C Linux applications, mobile applications (IOS and Android), SaaS, web applications (JavaScript, HTML), BSS/OSS, AWS cloud storage, 2-way video/audio streaming, authentication, and VoIP.

11. In 2016, I started an independent consulting business in technology and intellectual property projects. I have consulted in various technology areas and industries including consumer electronics, cable, satellite, television, and cryptocurrency.

12. From 2019 to 2022, I worked as Chief Technology Officer for Telular, an Ametek company. I was responsible for the development of Industrial Internet of Things (IIoT) recurring revenue solutions, combining wireless technologies, purpose-built hardware, and SaaS in the commercial telematics, security and home automation markets and sold under the SkyBitz and Telguard brands.

13. My record of professional service includes awards on products I designed and developed from several organizations in my field of expertise, including Best of Show, Technology Emmy, and Best of Innovations.

14. I am a named inventor on at least 87 issued patents and published patent applications corresponding to the areas of my professional work. The patents and

published applications involving television distribution systems, STBs, EPGs, Video on Demand (VOD), and content delivery systems include:

- U.S. Patent No. 9,615,139 titled "Determining Device That Performs Processing of Output Pictures"
- U.S. Patent No. 8,549,567 titled "Media Content Sharing Over a Home Network"
- U.S. Patent No. 8,161,388 titled "Interactive Discovery of Display Device Characteristics"
- U.S. Patent Nos. 8,120,924, 7,240,217, 6,785,817, 6,564,324, 6,212,278 and 5,440,632 titled "Reprogrammable subscriber terminal"
- U.S. Patent No. 7,908,625 titled "Networked Multimedia System"
- U.S. Patent Nos. 7,861,272 and 7,849,486 titled "Networked subscriber television distribution"
- U.S. Patent Nos. 7,774,820 and 7,069,578 titled "Settop cable television control device and method including bootloader software and code version table for maintaining and updating settop receiver operating system software"
- U.S. Patent No. 5,771,064 titled "Home communications terminal having an applications module"
- U.S. Patent No. 5,715,515 titled "Method and apparatus for downloading on-screen graphics and captions to a television terminal"
- U.S. Patent No. 5,657,414 titled "Auxiliary device control for a subscriber terminal"
- U.S. Patent No. 5,592,551 titled "Method and apparatus for providing interactive electronic programming guide"

- U.S. Patent No. 5,539,822 titled "System and Method for Subscriber Interactivity in a Television System"
- U.S. Patent No. 5,367,571 titled "Subscriber terminal with plug in expansion card"
- U.S. Patent No. 5,357,276 titled "Method of Providing Video On Demand with VCR Like Functions"
- U.S. Patent Application Publication No. 2004/0133911titled "Subscriber network in a satellite system"
- U.S. Patent Application Publication Nos. 2004/0068753 and 2008/0072272 titled "Video Transmission Systems and Methods for a Home Network"
- U.S. Patent Application Publication No. 2003/0192047 titled "Exporting data from a digital home communication terminal to a client device"

15. I have a general understanding of the U.S. patent prosecution process and of the novelty and non-obviousness requirements for patentability.

16. I believe that my extensive industry experience and educational background qualify me as an expert in the relevant field of data communications topologies, including those topologies specifically used for advertising. I am knowledgeable of the relevant skill set that would have been possessed by a hypothetical person of ordinary skill in the art ("POSA") at the time of the claimed invention of the '260 Patent, which I have treated as April 17, 2007 for purposes of this proceeding.

III. MATERIALS REVIEWED

17. In connection with my study of this matter and reaching the opinions stated herein, I have reviewed a number of documents including the exhibits listed in Appendix A.

IV. UNDERSTANDING OF APPLICABLE LEGAL STANDARDS

18. Although I am not an attorney, I have a general understanding of the applicable legal standards pertaining to the patentability issues presented in this proceeding.

19. I understand that, in this *inter partes* review (IPR), Petitioner is challenging the patentability of the claims of the ’260 Patent. I understand that Petitioner has the burden of proving that each challenged claim is unpatentable by a preponderance of the evidence.

20. I understand that to be valid, a patent claim must be “novel,” and is invalid if “anticipated” by a single prior art reference. I further understand that a reference anticipates if it discloses each and every element as arranged in the claim, so as to enable a person of ordinary skill in the art (“POSA”) to make and use the claimed invention without undue experimentation.

21. I understand that a patent claim is unpatentable if, at the time of the invention, it would have been obvious to a POSA to combine the teachings of the prior art to yield the patent claim. I also understand that it is not required (although

it is acceptable) that each element/limitation of a patent claim be found in a single reference in order to find a patent claim obvious. For a patent claim to be found obvious, all the elements/limitations of the patent claim may be found in a combination of references at which a person of ordinary skill in the art would have been reasonably expected to arrive. I understand that a proper analysis of whether an invention is unpatentable for obviousness includes a review of the scope and content of the prior art, the differences between the patent claims at issue and the prior art, the level of ordinary skill in the field of the invention at the time of the invention, and other objective considerations identified below.

22. It is my understanding that the prior art and claimed invention should be viewed through the knowledge and understanding of a person of ordinary skill in the art – one should not use his or her own insight or hindsight in deciding whether a claim is obvious. I further understand that a claim may be rendered obvious if a person of ordinary skill in the art can implement the claimed invention as a predictable variation of a known product. I also understand that a person of ordinary skill in the art is presumed to have knowledge of the relevant prior art at the time of the claimed invention, which comprises any prior art that was reasonably pertinent to the particular problems the inventor faced.

23. I understand that a showing of obviousness requires some articulated reasoning with a rational underpinning to support the combination of the references.

I understand that in consideration of the issue of obviousness it is important to identify whether a reason existed at the time of the invention that would have led a POSA to combine elements of the references in a way that yields the claimed invention.

24. I understand that a claim may be considered unpatentable for obviousness for various reasons. I have been informed that the following exemplary rationales may support a finding of obviousness:

(A) combining prior art elements according to known methods to yield predictable results;

(B) simply substituting one known element for another to obtain predictable results;

(C) use of a known technique to improve similar devices in the same way;

(D) applying a known technique to a known device ready for improvement to yield predictable results;

(E) choosing from a finite number of identified, predictable solutions with a reasonable expectation of success;

(F) known work in a field that prompts variations in the work in the same or a different field that leads to predictable results; and

(G) some teaching, suggestion, or motivation in the prior art that would have led a person of ordinary skill in the art to modify a prior art reference or

combine multiple prior art references or teachings to arrive at the claimed invention.

25. I understand that various objective or "real world" factors, also referred to as secondary considerations, may be indicative of non-obviousness. I understand that such factors/considerations include:

(A) the commercial success of the claimed invention;

(B) the existence of a long-felt, unresolved need for a solution to the problem solved by the claimed invention;

(C) failed attempts to solve the problem solved by the claimed invention;

(D) copying of the claimed invention;

(E) unexpected results of the claimed invention;

(F) praise for the claimed invention by others in the relevant field; and

(G) willingness of others to accept a license under the patent because of the merits of the claimed invention.

26. It is my understanding that the prior art references themselves may provide a suggestion, motivation, or reason to combine, but other times the link may be common sense. I further understand that the obviousness analysis recognizes that market demand, rather than scientific literature, often drives innovation, and that is sufficient motivation to combine references.

27. It is my understanding that a particular combination may be proven obvious merely by showing that it was obvious to try the combination. For example, common sense is a good reason for a person of ordinary skill to pursue known options when there is a design need or market pressure to solve a problem and there are a finite number of identified, predictable solutions.

28. I further understand that a proper obviousness analysis focuses on what was known or obvious to a person of ordinary skill in the art, not just the patentee. Accordingly, it is my understanding that any need or problem known in the field at the time of invention and addressed by the patent can provide a reason for combining the limitations in the manner claimed.

V. OVERVIEW OF THE '260 PATENT

29. The '260 Patent describes "a method for delivering targeted television advertisements based on online behavior," where "[u]sing user profile information derived from online activity from one of the online access IP addresses, a television advertisement is selected . . . ." Ex. 1101, Abstract, 7:59-65; *see* also 1:7-11. The '260 Patent does not limit a "user" to a single individual, but rather broadly defines the term as "one or more persons receiving online access or television services at a delivery end-point within a household, office, business, or other site or establishment served by an online access provider or television service provider." Ex. 1101, 8:31-36. The user—which may be multiple individuals—may receive the online access

or television services in various types of locations, such as in a home via a home network or in a business or other site, e.g., via a wireless hotspot or other access point providing online access. Ex. 1101, 8:31-53, 17:15-22.

30. The ’260 Patent admits that its method is implemented using a variety of well-known devices and technologies. *See*, e.g., Ex. 1101, 1:12-6:40. For example, the ’260 Patent describes devices and technologies such as a set-top box (STB) (“a device that connects a television and a signal source”), a central ad server (CAS) (“a computer server that manages delivery of online advertisements to visitors of online sites”), and profiles or partial profiles that “can contain any quantity of profile information, such as, in one example, just an online access IP address used by a person at the time his profile was collected and the identity of the profile provided,”) as part of the background for the alleged invention. *Id*., 1:29-53, 4:40-61, 5:46-67.

31. Although the ’260 Patent broadly describes “a method for delivering targeted television advertisements based on online behavior,” much of the specification specifically relates to obvious methods of associating internet protocol (IP) addresses of user devices and/or associating identifiers with user devices to facilitate delivery of said targeted television advertisements. *See*, e.g., Ex. 1101, 8:54-9:8, 9:35-10:45, 12:27-40, 14:62-15:43. For example, the ’260 Patent describes that known devices, such as a computer (i.e. “user online access device”)

and a STB, may both correspond to a user and connect to the Internet via a common modem. Ex. 1101, 1:29-53, 9:28-32, 9:35-50, 10:16-29.

32. The ’260 Patent describes associating the IP address of a user online access device with the IP address of a STB based on both devices having a common IP address based on a shared/common modem. Ex. 1101, 9:28-32, 9:35-50, 10:16-29, 12:54-13:15. The ’260 Patent explains that when a user online access device accesses the Internet through a modem, a dynamic IP address (i.e. “online access IP address”) “is allocated to the user’s modem 32 for online access, typically through DHCP.” Ex. 1101, 9:35-39. The online access IP address is then reported to a known device, such as a CAS, that manages delivery of online ads. Ex. 1101, 9:52-64. The ’260 Patent confirms in the background section of the specification that CASs, such as third-party ad servers, were known in the prior art. Ex. 1101, 4:40-61 (“Examples of third-party ad servers include DoubleClick’s DART for Publishers central ad server (also known as DFP) and DoubleClick’s DART for Advertisers central ad server (also known as DFA)”).

33. The ’260 Patent explains that “[w]hen the user’s STB 36 is used to access a web-based server (for accessing an online programming guide, for example, through the cable television transmission system or through a connection to the Internet)” the IP address of the STB is transmitted to the CAS as well. Ex. 1101, 10:20-24. Because the STB accesses the Internet through the same modem as the

user online access device, the CAS associates the STB's IP address "with the pseudonym previously associated with the user's modem 32," where the pseudonym was assigned to the user's online access IP address (i.e., modem IP address) when the user connected to the Internet via their online access device. Ex. 1101, 10:16-45.

34. The '260 Patent discusses utilizing the above-described associations to deliver targeted television advertisements to the user's STB based on user profiles. For example, indications of the user's online activity from a particular IP address can be electronically communicated to the CAS. Ex. 1101, 10:46-54. The '260 Patent describes that this, in turn, "can cause a television advertisement to be directed to the STB IP address that is associated with [the] online IP address" of the user. Ex. 1101, 10:54-57.

35. The '260 Patent explains that the targeted ads are "selected for delivery to the user's STB 36 based on the user's online behavior (e.g., merely accessing the online site 50, viewing a particular web page, performing a particular search, clicking on a particular link or ad, online shopping or purchases, or other activity). Information about observed online behavior (i.e., indications of online activity) or collected demographic information can be used by the CAS or by the profile provider to direct a targeted TV ad." Ex. 1101, 11:19-27. The user's online behavior can be gathered from profile providers that send electronic communications to the CAS

which contain "information derived from the interaction of the user with an online site." Ex. 1101, 11:36-47.

36. The '260 Patent further explains that, once an ad has been selected or requested, "the television advertisement can be transmitted to the user's STB in a variety of ways." Ex. 1101, 12:4-5. For example, the ad can be transmitted to the user directly from the CAS based on the CAS previously storing the ad, received by the CAS "from the accessed online site, from another online site, or from another ad server and stored on the CAS as part of the transmission request from the accessed online site, and then transmitted to the user's STB." Ex. 1101, 12:4-12, Fig. 6A. Additionally or alternatively, the ad "can be transmitted directly to the user's STB from the accessed online site" or "from another online site or ad server." Ex. 1101, 12:12-14, Figs. 6B-6C.

37. The '260 Patent describes its methods in configurations where online access and television services are provided by a common provider, and in configurations where online access and television services are provided by different providers. *See*, e.g., Ex. 1101, 8:13-20. As shown in Figures 3 and 11A (below, annotated), the '260 Patent describes both configurations as including a CAS (**purple**), a modem (**yellow**), a computer (i.e., user online access device) (**red**), and a STB (**green**). Ex. 1101, Figs. 3, 11A, 9:9-34, 10:38-40, 12:44-48. In both configurations, the user online access device and the STB access the Internet through

the same modem and the modem IP address is shared with both devices (**blue**) as described above. *Id.* Nothing about this topology/system is new; nor does the ’260 Patent purport to provide any new hardware or connection within the overall system/topology. *Id.*; see also Ex. 1101, 1:12-6:40.

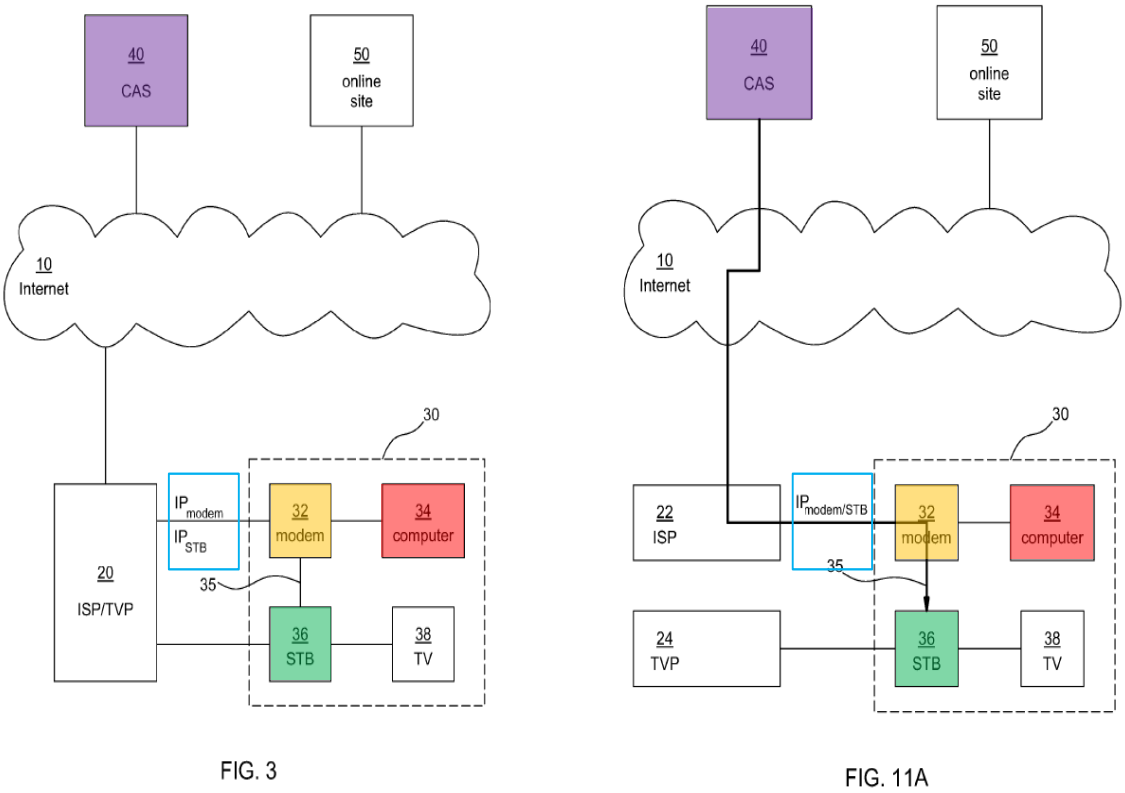

Ex. 1101, Figs. 3 and 11A (annotated)

38. As shown in the annotated figures above, the only structural difference between the two configurations is that the internet service provider (ISP) and television provider (TVP) are separate devices in the arrangement of Figure 11A. Ex. 1101, Figs. 3, 11A, 8:13-20. The ’260 Patent explains that regardless of which configuration is used, the online access IP address is assigned to the modem as

described above, the STB obtains online access via the same IP address as the user's online access device, and user profile information is gathered based on the user's online activity. Ex. 1101, 12:39-13:15, 13:56-14:50. Even if the ISP and TVP are separate devices, said user profile information is used to deliver targeted television ads to the STB based on an association between the STB IP address and the modem/user online access IP address (i.e., a "common IP address") as described above. Ex. 1101, 12:36-43.

39. The '260 Patent also describes an example implementation of the methods described above where "the user's STB 36 can be assigned an identifier," that the CAS may place "on the STB the first time it is in contact with the STB and read or amend the identifier every time afterwards the STB and the CAS are in contact." Ex. 1101, 14:62-15:5. The '260 Patent explains that the identifiers can be used "[w]hen an online site 50 is accessed from the common IP address, [and] online site 50 requests that a television advertisement be transmitted to the STB having the common IP address," in order to identify whether the television advertisement was correctly directed. Ex. 1101, 15:23-33. The '260 Patent admits that "[s]uch an identifier is an analogy of a 'cookie' used by online servers to recognize visitors' computers." Ex. 1101, 15:5-7. Cookies were known in the prior art, as described in the background of the '260 Patent. Ex. 1101, 6:21-36.

40. In summary, the ’260 Patent claims a method of using well-known devices and technologies to gather user information of user online activity by obvious methods and subsequently use the gathered user information to deliver targeted ads to STBs, based on similarly obvious methods of associating IP addresses of devices used to perform the online activity and of the STB.

VI. PROSECUTION HISTORY

41. The ’260 Patent was filed as U.S. App. No. 11/736,544 (“the ’544 Application”) on April 17, 2007, as the first application in its patent family.

42. The Examiner issued the first Office Action in the ’544 Application on August 18, 2009. Ex. 1104, pp. 245-291. In the Office Action, the Examiner rejected all fifty-one pending claims on the grounds of non-statutory double patenting over claims in a co-pending patent application. *Id*., p. 247. The Examiner explained that “[a]lthough the conflicting claims are not identical, they are not patentably distinct from each other because the claims are directed to targeted advertisement based on online behavior.” *Id*., p. 247.

43. The Examiner further rejected claims 1-11, 14-16, 19, and 21-51 under pre-AIA 35 U.S.C. 102(e) as anticipated by U.S. Pat. Pub. No. 2007/0294721 to Haeuser et al. (“Haeuser”), claim 12 under pre-AIA 35 U.S.C. 103 as obvious over Haeuser in view of U.S. Pat. No. 6,463,533 to Calamera et al. (“Calamera”), and claims 13, 17-18, and 20 under 35 U.S.C. 103 as obvious over Haeuser in view of

U.S. Pat. Pub. No. 2003/0187949 to Bhatt et al. ("Bhatt"). *Id*. at 247-263. Among other things, the Office Action found that Haeuser disclosed (1) "electronically associating online access IP addresses and received set-top box IP addresses for each of a multitude of users," (2) "using user profile information derived from online activity from a first one of the online access IP addresses to automatically cause a first television advertisement to be directed to the set-top box indicated by the set-top box IP address associated with the first online access IP address," (3) "a server, which electronically associates a multitude of online access IP addresses and IP addresses indicating corresponding television set-top boxes . . . causes direction of a select television advertisement to the set-top box indicated by the set-top box IP address associated with the first online access IP address," and (4) "a revenue amount is received." *Id*., pp. 248-249.

44. The applicant responded to the first Office Action on February 18, 2010. *Id*., pp. 291-322. In the response, the applicant added 101 additional claims resulting in a total of 152 pending claims, including 4 independent claims (claims 1, 30, 69, and 134), upon entry of the response. In the response, the applicant amended independent claims 1 and 30 "to include the limitation that the association between online access and set-top box IP addresses is 'based on a common IP address, wherein network traffic is routed via the common IP address for both an online user interface device and a set-top box' for each user," a limitation that appeared

originally in dependent claim 14. Ex. 1104, pp. 312-313. The applicant stated that "[t]he common IP address enables direction of a television advertisement for presentation to a set-top box of the user based on the user's profile information." *Id*., p. 313.

45. With respect to claims 1 and 30, as amended, the applicant argued that Haeuser "merely states that online access and set-top box may each use an IP address, but it does not disclose that they share a common IP address," and that Fig. 1 of Haeuser clearly shows user set-top boxes 116 and 124 connected to access network 166 (operated by a television provider), and computer 168 connected separately to public network 112 (e.g., the Internet)." *Id*., p. 313 (emphasis in original). The applicant further explained that:

> Other amendments of claims 1 and 30 are proposed to clarify wording without substantially altering scope or adding new matter. The phrase "for each of a multitude of multitude of users" has been moved, and the phrase "of the user" added in several places to emphasize that the electronic associations are established on a user-by-user basis. An online user interface device is now recited to make more clear how the user profile information is generated. The phrase "directed to a set-top box for presentation via that set-top box, selectively," is now recited to describe direction of the television advertisement to make clear that the

television advertisement is not broadcast universally for presentation to all users.

Id., p. 315.

46. With respect to the newly-added independent claims 69 and 134, the applicant explained that "claims 69 and 134 parallel but generalize claims 1 and 30, respectively, in that more general identifiers replace the IP addresses for associating a user's online user interface device and set-top box." *Id*., p. 315. The applicant further noted that claims 69 and 134 "include[] the same limitation discussed above, namely that an association between an online user interface device identifier and a set-top box identifier is 'based on a common IP address, wherein network traffic is routed via the common IP address for both the online user interface device and the set-top box' for each user." *Id*., p. 315.

47. On August 9, 2010, the Examiner issued a Notice of Allowance that allowed all 152 of the pending claims. Ex. 1104, pp. 365-414. The Notice of Allowance included an Examiner's Amendment, authorized by the applicant, and amending multiple claims. *Id*., pp. 369-375. Among other amendments, the Examiner amended each of independent claims 1, 30, 69, and 134. *Id*., pp. 369-374.

48. With respect to claim 1, the Examiner replaced claim 1's preamble with "[a] method implemented using a programmable hardware computer system, the method comprising:," added "with the computer system" before "electronically

associating" in limitation (a), and added "with the computer system" before "automatically causing" in limitation (b). *Id*., p. 369. With respect to claim 30, the Examiner replaced claim 30's preamble with "[a] method implemented using computer equipment, the method comprising:," added "with the computer equipment" before "automatically electronically delivering" in limitation (a), and added "and" after "online activity" in limitation (c). *Id*., p. 371. With respect to claim 69, the Examiner replaced claim 69's preamble with "[a] method implemented using a programmed hardware computer system, the method comprising:," added "with the computer system" before "electronically associating" in limitation (a), and added "with the computer system" before "automatically causing a first" in limitation (b). *Id*., p. 372. With respect to claim 134, the Examiner replaced claims 134's preamble with "[a] method implemented using computer equipment, the method comprising:," added "with the computer equipment" before "automatically electronically" in limitation (a), and added "and" after "activity" in limitation (c). Ex. 1104, p. 374. Additionally, the Examiner replaced the preambles for each independent claim to recite "[a] method implemented using" a computer system/computer equipment." *Id*., pp. 369, 371-72, 374.

49. The Notice of Allowance additionally included an Examiner's Statement for reasons for allowance. *Id*., pp. 375-376. The Examiner stated:

> [T]he instant invention is directed to a method which involves electronically associating online access internet protocol (IP) addresses and received set-top box IP addresses for a number of users. User profile information derived from online activity from the online access IP addresses is used to cause a TV advertisement to be directed to a set-top box IP address associated with the online access IP address, where the online activity comprises requesting a search. Electronic associations are stored between the online access IP addresses and the received set-top box IP addresses.

Id., p. 375. The Examiner further stated that none of Haeuser, Calamera, Bhatt, or "any of the cited references teach or suggest, alone or in combination, the feature of '…electronically associating an online access IP address of a user and a set-top box IP address of that user based on a common IP address, wherein the network traffic is routed via the common IP address to both an online user interface device and a set-top box of that user…'." *Id*., pp. 375-376.

50. On August 10, 2010, the applicant filed a Rule 312 Amendment after Notice of Allowance. *Id*., pp. 414-441. The Rule 312 Amendment included amendments to multiple claims, including the independent claims 1, 69, and 134. Ex. 1104, pp. 414-436. The applicant amended the preamble of claim 1 to replace "programmable" with "programmed," in reference to the "programmed hardware

computer system." *Id*., p. 415. The applicant amended claims 69 and 134 to fix commas. *Id*., pp. 423, 431-432, 436.

51. The Rule 312 Amendment additionally included applicant's comments on the Notice of Allowance. *Id*., p. 437. The applicant commented that the Notice of Allowance generally described claim 1 but does not describe exactly the other independent claims. *Id*. The Applicant commented that:

> Specifically, independent claims 30 and 134 do not "involve "electronically associating" affirmatively but rather involve delivery of data to a server that performs such associating, and independent claims 69 and 134 do not involve associating "IP addresses" but rather involve associating "identifiers" that may or may not be "IP addresses," albeit based on a "common IP address."

and:

> Also, the reasons for allowance say that "the online activity comprises requesting a search." Although that is true, strictly speaking, because "requesting a search" is an "online activity" that can fall within the term "online activity," the independent claims do not require "requesting a search" or mention the word "search in any way.

Id., p. 437 (emphasis in original). The Examiner entered the Rule 312 amendment on September 13, 2010. Ex. 1104, pp. 444-471.

52. The ’260 Patent issued on December 28, 2010. Ex. 1101, Cover.

VII. RELATED LITIGATION

53. I understand that the ’260 Patent is the subject of pending litigation involving Petitioner: *AlmondNet, Inc. and Intent IQ, LLC v. Freewheel Media, Inc. and Beeswax.io Corp.*, Case No. 1:23-cv-00220 (D. Del.). I understand that Patent Owner sued Petitioner for alleged infringement of the’260 Patent. Ex. 1141.

54. I understand that the ’260 Patent has or its related patents have been involved or is currently involved in other litigations:

- *AlmondNet, Inc. et al. v. Viant Technology Inc. et al.*, 1-23-cv-00174 (D. Del.)
    - I understand that this case is currently pending and that claim construction briefing has not occurred and that a claim construction ruling has not been issued.
- *AlmondNet, Inc. et al v. Amazon.com, Inc. et al.*, 6-22-cv-01204 (W.D. Tex.)
    - I understand that this case was terminated on June 1, 2023 and that prior to termination claim construction briefing did not occur and a claim construction ruling was not issued.
- *AlmondNet, Inc. et al. v. Microsoft Corporation et al.*, 6-22-cv-01206 (W.D. Tex.)

- I understand that this case was consolidated into the 897 W.D. Tex. case identified below and that the 897 W.D. Tex. case was designated as the lead case.

- *AlmondNet, Inc. et al v. Microsoft Corporation*, 6-21-cv-00897 (W.D. Tex.) ("897 W.D. Tex. case")
  - I understand that this case is currently pending and that a claim construction order was issued. I further understand that the claim construction briefing in this case was jointly submitted in the 898 W.D. Tex. case identified below. I also understand that the claim construction order in this case was also entered into the 898 W.D. Tex. case.
- *AlmondNet, Inc. et al v. Amazon.com, Inc. et al.*, 6-21-cv-00898 (W.D. Tex.) ("898 W.D. Tex. case")
  - I understand that this case is currently pending. I further understand that the claim construction briefing and the claim construction order issued in this case and the 897 W.D. Tex. case are the same.
- *AlmondNet, Inc. et al. v. Samsung Electronics Co., Ltd. et al.*, 6-21-cv-00891 (W.D. Tex.)
  - I understand that this case was transferred to the 7515 N.D. Cal. case.
- *Roku, Inc. v. AlmondNet, Inc. et al.*, 1-21-cv-01035 (D. Del.)

- I understand that this case is currently pending. I further understand that the claim construction briefing was submitted, but that a claim construction order has not issued.

- *AlmondNet, Inc. et al v. Oath Holdings Inc.*, 1-19-cv-00247 (D. Del.) ("247 D. Del. Case")
    - I understand that this case was terminated on Mar. 4, 2019 and that prior to termination a claim construction ruling was not issued.
- *AlmondNet, Inc. et al v. Yahoo! Inc.*, 1-16-cv-01557 (E. D. N.Y.)
    - I understand that this case was transferred to the 247 D. Del. case.

55. I understand the '260 Patent has no litigation history before the PTAB. However, the '260 Patent is part of a larger patent family as shown in the family tree in Appendix B. I understand that, as shown in the family tree, the '260 Patent is related to US Patent No. 8,677,398 ("the '398 Patent"), US Patent No. 10,715,878 ("the '878 Patent"), US Patent No. 8,566,164 ("the '164 Patent"), US Patent No. 8,595,069 ("the '069 Patent"), US Patent No. 10,321,198 ("the '198 Patent"), and US Patent No. 11,564,015 ("the '015 Patent").

56. I understand that the '398 Patent was the subject of a petition for IPR filed by third parties Amazon.com, Inc., Amazon Web Services, Inc., and Amazon.com Services LLC, Amazon.com, Inc. et al. v. Intent IQ, LLC, et al., Case No. IPR2023-00227, in which institution was denied a time-barred. I understand that

Petitioner had no involvement in the Amazon petition, and I had no involvement in that proceeding.

57. I understand that the ’398 Patent was the subject of a petition for IPR filed by third party Meta Platforms, Inc., Meta Platforms, Inc. f/k/a Facebook, Inc. v. Intent IQ, LLC et al., Case No. IPR2022-00773, which was jointly terminated after institution was granted. Ex. 1105, pp. 84, 115, 117-120. I understand that Petitioner had no involvement in the Meta petition, and I had no involvement in that proceeding.

58. As discussed in more detail below, I understand that the ’398 Patent was the subject of a petition for IPR filed by third parties Microsoft Corporation, Samsung Electronics America, Inc., and Samsung Electronics Co., Ltd., Microsoft Corporation et al. v. Intent IQ, LLC, Case No. IPR2022-01420, in which institution was denied because the petitioner in that case did not establish a reasonable likelihood of prevailing on at least one challenged claim. I understand that Petitioner had no involvement in the Microsoft petition, and I had no involvement in that proceeding.

59. As discussed in more detail below, I understand that the ’398 Patent was the subject of a petition for IPR filed by third party Roku, Inc., Roku, Inc. v. Intent IQ, LLC et al., Case No. IPR2022-01236, in which institution was denied because the petitioner in that case did not establish a reasonable likelihood of

prevailing on at least one challenged claim and in which Director Review was denied. I understand that Petitioner had no involvement in the Roku petition, and I had no involvement in that proceeding.

60. I understand that the ’398 Patent was the subject of a petition for IPR filed by third party Yahoo! Inc., Yahoo! Inc. v. Intent IQ, LLC et al., Case No. IPR2017-01299, in which institution was denied because the petitioner in that case did not establish a reasonable likelihood of prevailing on at least one challenged claim. I understand that Petitioner had no involvement in the Yahoo petition, and I had no involvement in that proceeding.

61. As discussed in more detail below, I understand that the ’878 Patent was the subject of a petition for IPR filed by third party Roku, Inc., Roku, Inc. v. Intent IQ, LLC, Case No. IPR2022-01315, in which institution was denied because the petitioner in that case did not establish a reasonable likelihood of prevailing on at least one challenged claim. I understand that Petitioner had no involvement in the Roku petition, and I had no involvement in that proceeding.

62. As discussed in more detail below, I understand that the ’878 Patent was the subject of a petition for IPR filed by third party Samsung Electronics Co., Ltd., Samsung Electronics Co., Ltd. v. AlmondNet, Inc. et al., Case No. IPR2022-01505, in which institution was denied because the petitioner in that case did not establish a reasonable likelihood of prevailing on at least one challenged claim. I

understand that Petitioner had no involvement in the Samsung petition, and I had no involvement in that proceeding.

63. As discussed in more detail below, I understand that the ’878 Patent is the subject of a petition for IPR filed by third party Meta Platforms, Inc., Meta Platforms, Inc. f/k/a Facebook, Inc. v. Intent IQ, LLC et al., Case No. IPR2023-01281, which was filed on August 4, 2023, in which institution was granted. I understand that Petitioner had no involvement in the Meta petition, and I had no involvement in that proceeding.

64. I understand that the ’164 Patent was the subject of a petition for IPR filed by third party Samsung Electronics Co., Ltd., Samsung Electronics Co., Ltd. v. Intent IQ, LLC, Case No. IPR2022-01506, in which institution was denied because the petitioner in that case did not establish a reasonable likelihood of prevailing on at least one challenged claim. I understand that Petitioner had no involvement in the Samsung petition, and I had no involvement in that proceeding.

65. As discussed in more detail below, I understand that the ’164 Patent was the subject of a petition for IPR filed by third party Roku, Inc., Roku, Inc. v. Intent IQ, LLC, Case No. IPR2022-00953, in which institution was denied because the petitioner in that case did not establish a reasonable likelihood of prevailing on at least one challenged claim. I understand that Petitioner had no involvement in the Roku petition, and I had no involvement in that proceeding.

66. As discussed in more detail below, I understand that the ’069 Patent was the subject of a petition for IPR filed by third party Roku, Inc., Roku, Inc. v. Intent IQ, LLC, Case No. IPR2022-00959, in which institution was denied because the petitioner in that case did not establish a reasonable likelihood of prevailing on at least one challenged claim. I understand that Petitioner had no involvement in the Roku petition, and I had no involvement in that proceeding.

67. As discussed in more detail below, I understand that the ’198 Patent was the subject of a petition for IPR filed by third party Roku, Inc., Roku, Inc. v. Intent IQ, LLC, Case No. IPR2022-00960, in which institution was denied because the petitioner in that case did not establish a reasonable likelihood of prevailing on at least one challenged claim. I understand Petitioner had no involvement in the Roku petition, and I had no involvement in that proceeding.

68. As discussed in more detail below, I understand that the ’198 Patent was the subject of a petition for IPR filed by third party Samsung Electronics Co., Ltd., Samsung Electronics Co., Ltd. v. Intent IQ, LLC, Case No. IPR2022-01507, in which institution was denied because the petitioner in that case did not establish a reasonable likelihood of prevailing on at least one challenged claim. I understand that Petitioner had no involvement in the Samsung petition, and I had no involvement in that proceeding.

A. ’398 IPRS

69. I understand that Microsoft Corporation, Samsung Electronics America, Inc., and Samsung Electronics Co., Ltd. (collectively “Microsoft”) filed a petition for IPR (IPR2022-01420) on August 12, 2022 challenging claims 1, 2, 36, and 37 of the ’398 patent. I understand that, in a first ground, claims 1, 2, 36, and 37 were alleged to be anticipated under pre-AIA U.S.C. § 102(a) and § 102(e) by U.S. Patent No. 8,180,674 to Madhavan (“Madhavan”). I understand that, in a second ground, claims 1, 2, 36, and 37 were alleged to be anticipated under pre-AIA U.S.C. § 102(a) and § 102(e) by U.S. Patent No. 9,110,903 to Martinez (“Martinez”). I understand that, in a third ground, claims 1, 2, 36, and 37 were alleged to be unpatentable under pre-AIA U.S.C. § 103(a) as being obvious over Madhavan. I understand that, in a fourth ground, claims 1, 2, 36, and 37 were alleged to be unpatentable under pre-AIA U.S.C. § 103(a) as being obvious over Martinez. I understand that Microsoft did not propose any constructions for any claim terms. I understand that Patent Owner filed a Preliminary Response, but did not propose any constructions for any claim terms. I understand that the PTAB denied institution on April 7, 2023 because the Microsoft did not establish a reasonable likelihood of prevailing on at least one challenged claim. I understand that Petitioner had no involvement in the Microsoft petition, and I had no involvement in that proceeding. I understand that Roku, Inc. (“Roku”), filed a petition for IPR (IPR2022-01236) on

Jul 5, 2022 challenging claims 13-17, 19, 20-26, of the ’398 Patent. I understand that, in a first ground, claims 13-17, 20-23, and 26 were alleged to be unpatentable under pre-AIA U.S.C. § 103(a) as being obvious over Madhavan in view of U.S. Patent No. 7,843,923 to Baum (“Baum”). I understand that, in a second ground, claim 19 was alleged to be unpatentable under pre-AIA U.S.C. § 103(a) as being obvious over Madhavan in view of Baum and U.S. Patent Application No. 2006/0242294 to Damick et al. (“Damick”). I understand that, in a third ground, claims 24 and 25 were alleged to be unpatentable under pre-AIA U.S.C. § 103(a) as being obvious over Madhavan in view of Baum and U.S. Patent No. U.S. Patent No. 7,908,645 to Varghese et al. (“Varghese”). I understand that Roku did not propose any constructions for any claim terms. I understand that Patent Owner filed a Preliminary Response on November 4, 2022, but did not propose any constructions for any claim terms. I understand that the PTAB issued a decision denying institution of IPR on February 2, 2023, because Roku did not establish a reasonable likelihood of prevailing on at least one challenged claim and in which Director Review was denied. I understand that Petitioner had no involvement in the Roku petition, and I had no involvement in that proceeding.

70. I understand that the Amazon and Yahoo! IPRs for the ’398 Patent were denied institution, and the Meta IPR for ‘398 was jointly terminated. I understand that none of the current Petition’s grounds rely on references that were applied

during the Amazon, Meta, or Yahoo! IPRs for the ’398 Patent. I understand that Petitioner was not involved in the petitions for IPR of the ’398 Patent, and I had no involvement in these proceedings.

B. ’878 IPRS

71. I understand that the petition for the Roku ’878 IPR (IPR2022-01315) was filed on July 27, 2022, challenging claims 1-23 of the ’878 Patent. I understand that, in a first ground, claims 1, 2, 5-7, 10, 13, 14, 17-19, and 22 were alleged to be unpatentable under pre-AIA U.S.C. § 103(a) as being obvious over Madhavan in view of Baum, U.S. Patent No. 8,040,819 to Harrington et al. (“Harrington”), and Damick. I understand that, in a second ground, claims 3, 4, 11, 12, 15, 16, 20, 21, and 23 were alleged to be unpatentable under pre-AIA U.S.C. § 103(a) as being obvious over Madhavan in view of Baum, Harrington, Damick, and Rankin. I understand that, in a third ground, claims 8 and 9 were alleged to be unpatentable under pre-AIA U.S.C. § 103(a) as being obvious over Madhavan in view of Baum, Harrington, Damick, and Varghese. I understand that Roku did not propose any constructions for any claim terms. I understand that Patent Owner filed a Preliminary Response on December 16, 2022, but did not propose any constructions for any claim terms. I understand that the PTAB issued a decision denying institution of IPR on March 13, 2023, because Roku did not establish a reasonable likelihood of prevailing on at least one challenged claim and in which Director Review was

denied. I understand that Petitioner had no involvement in the Roku petition, and I had no involvement in that proceeding. I understand that the petition for the Samsung '878 IPR (IPR2022-01505) was filed on September 7, 2022, challenging claims 1-23 of the '878 Patent. I understand that the Samsung '878 IPR asserted the same grounds (based on the same prior art combinations) as the Roku '878 IPR. I understand that, like the Roku '878 IPR, the Samsung '878 IPR asserted, in a first ground, claims 1, 2, 5-7, 10, 13, 14, 17-19, and 22 were alleged to be unpatentable under pre-AIA U.S.C. § 103(a) as being obvious over Madhavan in view of Baum, Harrington, and Damick. I understand that, in a second ground, claims 3, 4, 11, 12, 15, 16, 20, 21, and 23 were alleged to be unpatentable under pre-AIA U.S.C. § 103(a) as being obvious over Madhavan in view of Baum, Harrington, Damick, and Rankin. I understand that, in a third ground, claims 8 and 9 were alleged to be unpatentable under pre-AIA U.S.C. § 103(a) as being obvious over Madhavan in view of Baum, Harrington, Damick, and Varghese. I understand that Samsung moved for joinder of the Roku '878 IPR with the Samsung '878 IPR on September 7, 2022. I understand that Samsung did not propose any constructions for any claim terms. I understand that Patent Owner filed a Preliminary Response on December 28, 2022, but did not propose any constructions for any claim terms. I understand that the PTAB issued a decision denying the motion for joinder and institution of IPR on March 22, 2023, because Samsung did not establish a reasonable likelihood of

prevailing on at least one challenged claim. I understand that Petitioner had no involvement in the Samsung petition, and I had no involvement in that proceeding.

72. I understand that the Meta IPR of the ’878 patent was instituted on February 21, 2024. I understand that none of the current Petition’s grounds rely on references that were applied during the Meta IPR of the ’878 Patent. I understand that Petitioner was not involved in the petitions for IPR of the ’878 Patent.

C. ’164 IPRS

73. I understand that the petition for the Roku ’164 IPR (IPR2022-00953) was filed on May 24, 2022, challenging claims 1-3, 6-14, 16-18, 20, 21, 23-25, 27, and 28 of the ’164 Patent. I understand that the Roku ’164 IPR asserted, in a first ground, claims 1-3, 6, 12, 14, 16-18, 21, 23-25, and 28 were alleged to be unpatentable under pre-AIA U.S.C. § 103(a) as being obvious over Madhavan in view of U.S. Patent Application Publication No. 2008/0281697 to Whitehead (“Whitehead”). I understand that, in a second ground, claims 7 and 8 were alleged to be unpatentable under pre-AIA U.S.C. § 103(a) as being obvious over Madhavan in view of Whitehead and U.S. Patent No. 9,495,682 to Vallier (“Vallier”). I understand that, in a third ground, claims 9, 10, and 13 were alleged to be unpatentable under pre-AIA U.S.C. § 103(a) as being obvious over Madhavan in view of Whitehead and Varghese. I understand that, in a fourth ground, claims 11, 20, and 27 were alleged to be unpatentable under pre-AIA U.S.C. § 103(a) as being

obvious over Madhavan in view of Whitehead and U.S. Patent No. 9,928,522 to Beyda et al. ("Beyda"). I understand that Samsung did not propose any constructions for any claim terms. I understand that Patent Owner filed a Preliminary Response on September 6, 2022, but did not propose any constructions for any claim terms. I understand that the PTAB issued a decision denying institution of IPR on November 29, 2022, because Roku did not establish a reasonable likelihood of prevailing on at least one challenged claim. I understand that Petitioner had no involvement in the Roku petition, and I had no involvement in that proceeding. I understand that intuition of Samsung's petition for IPR of the '164 Patent (IPR2022-01506) was denied on April 13, 2023 because Samsung did not establish a reasonable likelihood of prevailing on at least one challenged claim. I understand that none of the current Petition's grounds rely on references that were applied during the Samsung IPR of the '164 Patent. I understand that Petitioner had no involvement in the Samsung petition, and I had no involvement in that proceeding.

D. '069 IPR

74. I understand that the petition for the Roku '069 IPR (IPR2022-00959) was filed on May 13, 2022, challenging claims 1, 3-5, 8-18, 20-25, and 27-31 of the '069 Patent. I understand that the Roku '069 IPR asserted, in a first ground, claims 1, 3-5, 8, 17, 18, 20, 21, 25, 27, and 28 were alleged to be unpatentable under pre-AIA U.S.C. § 103(a) as being obvious over Madhavan in view of Whitehead. I

understand that, in a second ground, claims 9 and 10 were alleged to be unpatentable under pre-AIA U.S.C. § 103(a) as being obvious over Madhavan in view of Whitehead and Vallier. I understand that, in a third ground, claims 11-16, 22-24, and 29-31 were alleged to be unpatentable under pre-AIA U.S.C. § 103(a) as being obvious over Madhavan in view of Whitehead and Varghese. I understand that Roku did not propose any constructions for any claim terms. I understand that Patent Owner filed a Preliminary Response on September 6, 2022, but did not propose any constructions for any claim terms. I understand that the PTAB issued a decision denying institution of IPR on November 29, 2022, because Roku did not establish a reasonable likelihood of prevailing on at least one challenged claim. I understand that Petitioner had no involvement in the Roku petition, and I had no involvement in that proceeding.

E. '198 IPRS

75. I understand that the petition for the Roku '198 IPR (IPR2022-00960) was filed on May 13, 2022, challenging claims 1, 3-5, 8-18, 20-26, and 28-33 of the '198 Patent. I understand that the Roku '198 IPR asserted, in a first ground, claims 1, 3-5, 8, 17, 18, 20, 21, 26, 28, and 29 were alleged to be unpatentable under pre-AIA U.S.C. § 103(a) as being obvious over Madhavan in view of Whitehead. I understand that, in a second ground, claims 9, 10, 25, and 33 were alleged to be unpatentable under pre-AIA U.S.C. § 103(a) as being obvious over Madhavan in

view of Whitehead and Vallier. I understand that, in a third ground, claims 11-16, 22-24, and 30-32 were alleged to be unpatentable under pre-AIA U.S.C. § 103(a) as being obvious over Madhavan in view of Whitehead and Varghese. I understand that Roku did not propose any constructions for any claim terms. I understand that Patent Owner filed a Preliminary Response on September 7, 2022, but did not propose any constructions for any claim terms. I understand that the PTAB issued a decision denying institution of IPR on November 29, 2022, because Roku did not establish a reasonable likelihood of prevailing on at least one challenged claim. I understand that Petitioner had no involvement in the Roku petition, and I had no involvement in that proceeding. I understand that intuition of Samsung's petition for IPR of the '198 Patent (IPR2022-01507) was denied on March 29, 2023 because Samsung did not establish a reasonable likelihood of prevailing on at least one challenged claim. I understand that the Samsung IPR of the '198 Patent asserted grounds involving Martinez, used in the current Petition supported by this Declaration. I understand that no other references used in the current Petition were applied during the Samsung IPR of the '198 Patent. I understand that Petitioner had no involvement in the Samsung petition, and I had no involvement in that proceeding.

VIII. TECHNICAL BACKGROUND

A. TARGETED DIGITAL ADVERTISING

76. It is my opinion that targeted digital advertising was well known prior to the ’260 Patent.

77. The concept of providing targeted advertisements to users (e.g., via the Internet-connected devices and/or other devices providing digital advertisements) was known at least by the 1990s. In 1997, Robbin Zeff and Brad Aronson authored *Advertising on the Internet* (“Zeff,” Ex. 1137), which describes method of providing digital advertisements over the Internet, including targeted advertisements. Ex. 1137, pp. 144, 163-188. As the authors noted, advertisers “dreamed of delivering the right ad to the right person at the right time” (i.e., providing targeted advertisements) since the inception of the Internet. Ex. 1137, p. 144. The authors further provide an example of the benefits of targeted digital advertising when compared to earlier advertising methods, describing that:

> In a broadcast television campaign, advertisers can target by geographic location, time of day, and the audience watching a particular show. With a direct mail campaign, marketers can target as finely as Fortune 500 employees who have attended safety and health conferences. **Internet advertising can offer an advertiser all the targeting capabilities of other media plus a lot more. Indeed, on the Internet**

> **an advertiser can finally target every ad so that it goes out to just the right prospective customer at precisely the right time**.

Ex. 1137, p. 144 (emphasis added).

78. It is my opinion that a POSA would have been aware of the technologies and techniques required to perform targeted digital advertising as described by Zeff. Specifically, it was well known that products and/or services could be advertised to users based on user preferences, derived from user's online activities, habits, purchase histories, and other interactions over the Internet. For example, Burner (Ex. 1132) discloses that online advertisers would select web pages that they believe their target audience is likely to visit and discusses issues relating to determining on which sites an advertiser should place their advertisements to maximize user views/interactions. Ex. 1132, 1:42-58. Burner describes methods of determining where to provide targeted advertisements, such as developing a user profile. Ex. 1132, 1:59-61. Burner gives an example of such a process, disclosing:

> [W]hen the user first visits a web site running [targeted advertising] software, the server requests that the user's browser software permanently record an identifying string of characters (called a 'cookie') in a file local to the user's personal computer. The server then records each web page visited on that site by the user and associates this usage trail with the cookie. The server software **can then**

customize content (including advertising content) according to the interests evinced by the user's habits.

Ex. 1132, 1:62-2:4 (emphasis added). Heckel (Ex. 1133) describes a similar method, "for advertising over a computer network utilizing virtual environments of games." Ex. 1133, Cover. Heckel's method includes implementing user/visitor profiles, achieved by retrieving a "demographic profile…of the user" from an ad server database or a user database to "locate appropriate advertising for the [user]." Ex. 1133, 4:2-9, 4:43-58.

79. Petitioner itself disclosed methods of targeted digital advertising before the priority date of the '260 Patent. Black (Ex. 1134) describes a method of providing digital advertisements (e.g., via video distribution systems for video-on-demand (VOD)) that "match[] content and target audience," which "solves the problem of advertising effort being wasted on uninterested viewers . . . by providing selected advertisements to VOD viewers." Ex. 1134, ¶ [0015]. Black discloses that advertisers can set rules that identify which targeted digital ads should be presented to users based on various parameters, including demographics, geographic location, timing, and other parameters. Ex. 1134, ¶¶ [0025], [0036].

80. It was also known that one aspect of targeted digital advertising is the ability for platforms displaying targeted advertisements to receive revenue based on providing the targeted advertisements. As Zeff recognized, Internet advertising was

focused on generating revenue for website that display digital advertisements from its inception. Ex. 1137, p. 163 ("[w]hen advertising on the Web first began, no one knew how to price. The only known figure was the fee HotWired decided to charge for its first ads in 1994: $30,000 for banner advertising that ran for 12 weeks."). In John Hagel and Marc Singer's *Net Worth* (Ex. 1136), the authors show that as early as 1999 it was known that advertisers would pay for the opportunity to specifically provide targeted advertisements to users (e.g., "as they're considering a purchase"). Ex. 1136, pp. 35-37, 44-45, 149-151. *Net Worth* notes that the revenue for providing targeted advertisements can go to the platform displaying the targeted advertisement, or even to the users who provided the information used to provide the targeted advertisements. Ex. 1136, pp. 35-37, 41, 44-45, 149-151. It was known that advertisers and entities receiving revenue for displaying targeted advertisements could use various pricing models to generate and receive revenue, such as models that "range from flat-fee to paying for the number of times an ad is seen . . . to paying on a cost-per-lead or cost-per-purchase basis." Ex. 1137, p. 164; *see also id.*, pp. 163-188.

81. Therefore, it was well known to use technologies such as those described above to identify advertisements of interest to specific user/visitors, provide those advertisements as targeted ads, and receive revenue as a result of providing the targeted advertisements.

B. METHODS FOR DELIVERY OF TARGETED ADVERTISEMENTS

82. As I discussed above at Section VIII.A, providing targeted digital advertising was well-known prior to the alleged invention of the ’260 Patent. In addition to the general concepts of identifying advertisements of interest to specific user/visitors, providing those advertisements as targeted ads, and receiving revenue as a result of providing the targeted advertisements, specific methods of delivering targeted advertisements from one device to another were also well-known. Ex. 1145, ¶¶ [0002], [0006], [0017]-[0019]; Ex. 1148, pp. 188-189; Ex. 1150, ¶¶ [0041], [0045]-[0046], [0074]; Ex. 1143, Abstract, 6:37-39, 6:50-57, 7:10-15, 9:2-10, 13:10-25; Ex. 1150, p. 2; Ex. 1147, pp. 3-5. In delivering targeted advertisements, advertisers essentially had two common-sense options: either sending the advertisements to a device in response to a request for the ad or sending the advertisements to a device without a prior request. Methods and techniques for performing either option were well-understood by a POSA by at least the late 1990s and early 2000s.

83. Serving targeted ads to a device without a request by the device was well-known by the early 2000s. Traditional television ad delivery involved broadcasting commercials during scheduled programming, without any input from the viewer. Ex. 1145, ¶ [0002]. Collecting characteristics of viewers in order to refine and “target” ads was also well-understood (*see* Section VIII.A, above).

Jennings (Ex. 1150), for example, describes targeting media based on "sex, age, hobbies, historical viewing habits, and other data the viewer would provide." Ex. 1150, ¶ [0041]; *see also* Ex. 1145, ¶ [0027] ("formation of groups for targeted advertising … subgroups may be based (1) geographic segmentation, (2) demographic segmentation, (3) psychological segmentation," etc.); Ex. 1146, ¶¶ [0016]-[0017] (building subscriber profiles based on information "collected from subscribers during the subscription registration process" and "behavioral data" for subscribers comprising "website viewing behaviors, emails, electronic purchases over the internet" and selecting subscribers for ads based on the profile information). Putting the concepts together and delivering targeted advertisements based on viewer characteristics without a specific device or user request was also known in the art as of at least 2006. *See* (Ex. 1145, ¶ [0006] (describing delivery of "targeted advertisements to the set-top boxes (STB)"); Ex. 1146, Abstract (describing system and method for sending "inserting the targeted advertisement data into video data; sending the video data from the IPTV server to … selected segment of the IPTV subscriber population"). For example, "Flickinger445" (Ex. 1145) describes a "a method for delivering targeted advertisements to a set-top boxes (STBs)," where the ad could be served over analog cable or digital television networks. Ex. 1145, ¶¶ [0006], [0017]-[0019]. "Howcroft742" (Ex. 1146) further describes a method for determining a subscriber group send a targeted advertisement to, inserting the

targeted advertisement into video data, and sending the "video data from the IPTV server to client devices associated with members of the selected segment." Ex. 1146, ¶ [0013]. These advertisements were delivered to the client device by inserting the targeted advertisement into the video data sent to the client device, without a user or device request for that targeted advertisement.

84. Similarly, targeted advertising was also a well-known strategy in Internet and web-based environments. Fabos (Ex. 1148), for example, describes that banner ads were common examples of targeted ads displayed to a device, oftentimes without a user specifically choosing and requesting an advertisement. Ex. 1148, p. 189. By 1998, content-rich pages supporting banner advertising had become the primary sources of revenue in the internet industry, and this method of delivering advertisements would have been well-known to a POSA. Ex. 1148, p. 189. Search engine sponsored links were another example of a targeted ad delivered without a user/user's device selecting and asking for a specific advertisement. Ex. 1148, p. 188. As Fabos explains, "the advertiser pays the search engine to be affiliated with certain key words; the search company provides the sponsored links…." Ex. 1148, p. 188.

85. Serving targeted ads to a device based on a request from the device was similarly well-known. For example, a POSA would have known that users may interact (e.g., via a device) with displayed advertisements to receive further

information about the ad and/or additional advertisements. If an advertisement was delivered to a television (e.g., via a set-top box) the television could display ads which users could choose to click on and interact with, receiving more information (*i.e.*, advertisements) about the advertised product. Ex. 1143, Abstract, 6:37-39, 6:50-57, 7:10-15, 9:2-10, 13:10-25. In the context of web-based delivery of targeted advertisements, client devices could similarly request ads by a user interacting with (e.g., clicking on) a displayed advertisement, or by simply loading a webpage in which a targeted advertisement link is embedded. Ex. 1120, ¶¶ [0002], [0032]. Clients could also answer surveys providing information to a content provider indicating the types of advertisements that match the client's demographics, activities, and/or other characteristics. Ex. 1114, ¶¶ [0063]-[0064]; Ex. 1147, p. 2 (noting that Amazon.com supports the ability for users to request email notifications when new books by an author are available for purchase). This allows the advertiser to tailor ads according to the client's preferences and deliver the ad to the client's device, as requested.

86. Various system architectures for implementing targeted advertisement delivery were also common knowledge by the mid-2000s. For example, a POSA at that time would have recognized that targeted advertisements could be delivered to devices by a content provider's system (*e.g.*, a provider of the content through which the advertisement would be displayed), or by an independent (*i.e.*, third-party)

system. As discussed above, content providers may deliver targeted advertisements directly to a set-top box, IPTV, and/or other television systems. Ex. 1150, ¶¶ [0045]-[0046] (noting that the network owner may "stream media to its employees or customers directly"); Ex. 1146, Abstract, ¶¶ [0011], [0013]-[0014], [0024]-[0025] (receiving, at the IPTV provider's server, the targeted advertisement, inserting the targeted advertisement data into video data, and sending the video data to subscribers); Ex. 1145, ¶¶ [0017], [0019]-[0020], [0030] (serving targeted advertisements to subscribers from a "head end or central office 22 via a cable network 23," where a subscriber's STB receives the cable stream).

87. It was also well-known that targeted advertisements could be delivered—as web-based and/or television advertisements—by third party providers. In May of 2000, Susan Young authored Getting the Message: How the Internet is Changing Advertising (Ex. 1149), where she discussed how technology called "DART (for dynamic advertising reporting and targeting) … tracks 26 criteria—from keywords in searches, to purchases, to time-of-day surfing, to domain name—in order to develop a user profile." Ex. 1149, p. 2. One early ad serving firm, Doubleclick, built a business matching Web users with advertisers and "sell[ing] ad space on the Web sites it represents" to deliver targeted ads on these sites, based on the user profiles. *Id.* Leigh (Ex. 1120) describes the use of an "Ad Content Server" to request and insert targeted advertisements from third parties at specified locations

on web pages. Ex. 1120, ¶¶ [0022]-[0024]; *see also* Ex. 1133, 3:37-44, 4:50-58 (third-party advertisement server delivering targeted advertisements via code plug-ins in Internet-enabled games).

88. Therefore, methods of delivering targeted advertisements from one device to another, with or without a prior request, were well-known prior to the priority date of the ’260 Patent.

C. NETWORK ADDRESS TRANSLATION

89. Network Address Translation (NAT) was a well-known method of mapping multiple IP addresses (e.g., private addresses) inside a network to a common public IP address at least as of May 1994, when a Request for Comments (RFC) detailing NAT was published by the Internet Engineering Task Force (IETF). Ex. 1135. NAT was created to solve the problems of IP address depletion and scaling in routing by reusing IP addresses in a network for multiple devices (e.g., stub routers using NAT). Ex. 1135, pp. 1-2. IP addresses are divided into reusable addresses, that can be used by multiple devices, and globally unique addresses that no other devices (e.g., other routers) can use. Ex. 1135, pp. 2-4. By utilizing reusable addresses and globally unique addresses, systems such as a local network conserve resource by assigning reusable IP addresses to devices and/or domains within a local network that rarely communicate externally and translating the reusable IP address

into a globally unique address when communications need to be sent outside of the network. Ex. 1135, pp. 1-4.

90. Various methods of performing NAT were known prior to the ’260 Patent. For example, and as described in further detail below, Zwicky (Ex. 1112) discloses methods of performing network address translation (NAT), allowing a network to use one set of network addresses (such as IP addresses) internally and a different set when dealing with external networks, as outlined by the RFC. Ex. 1112, p. 114. Specifically, Zwicky discloses an implementation of NAT that translates both router ports and IP addresses, using port and address translation, to allow multiple clients connected to a router to share a single (i.e., common) IP address. Ex. 1112, pp. 114-116, Fig 5.4.

91. Therefore, it was well-known to use technologies and methods such as NAT to cause multiple devices and/or domains to share a common IP address for some communications while using different IP addresses for other communications.

IX. OVERVIEW OF THE RELIED UPON PRIOR ART

A. US PAT. NO. 8,180,674 (“MADHAVAN”)

92. Madhavan (Ex. 1162) is a U.S. Patent issued on May 15, 2012, from an application filed on October 3, 2006 and published on April 3, 2008. I understand that Madhavan qualifies as prior art under pre-AIA 35 U.S.C. § 102(e).

93. Madhavan discloses an apparatus and method for providing targeted advertising based on mutual information (e.g., online activity) sharing between multiple computing devices accessing a common network. Madhavan's system includes a network-based content and advertising entity 100 (e.g., content service provider) that includes a number of different servers (**green**) as shown in Figure 2 below. Ex. 1162, 4:26-36, 4:57-65, 5:18-27, 8:5-8, 8:53-56.

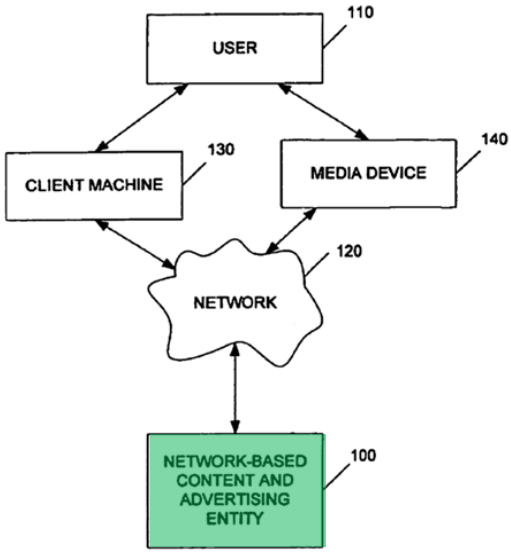

Ex. 1162, Fig. 1 (annotated)

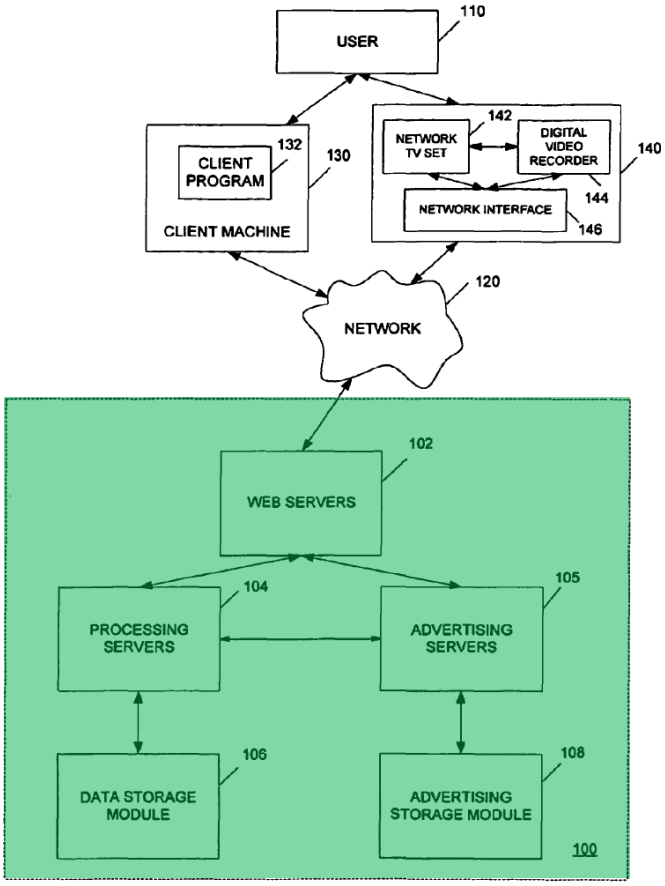

Ex. 1162, Fig. 2 (annotated)

94. Madhavan discloses that content and advertising entity 100 (also referred to herein as the "content service provider 100," "content server 100," or

"entity 100") can be accessed by different users 110 through a network 120, such as the internet. Ex. 1162, Abstract, 1:36-54, 4:46-5:2. For example, Madhavan's content service provider 100 is connected to network 120, which also connects to client machine 130 (**red**) and media device 140 (**blue**). Ex. 1162, 4:37-45.

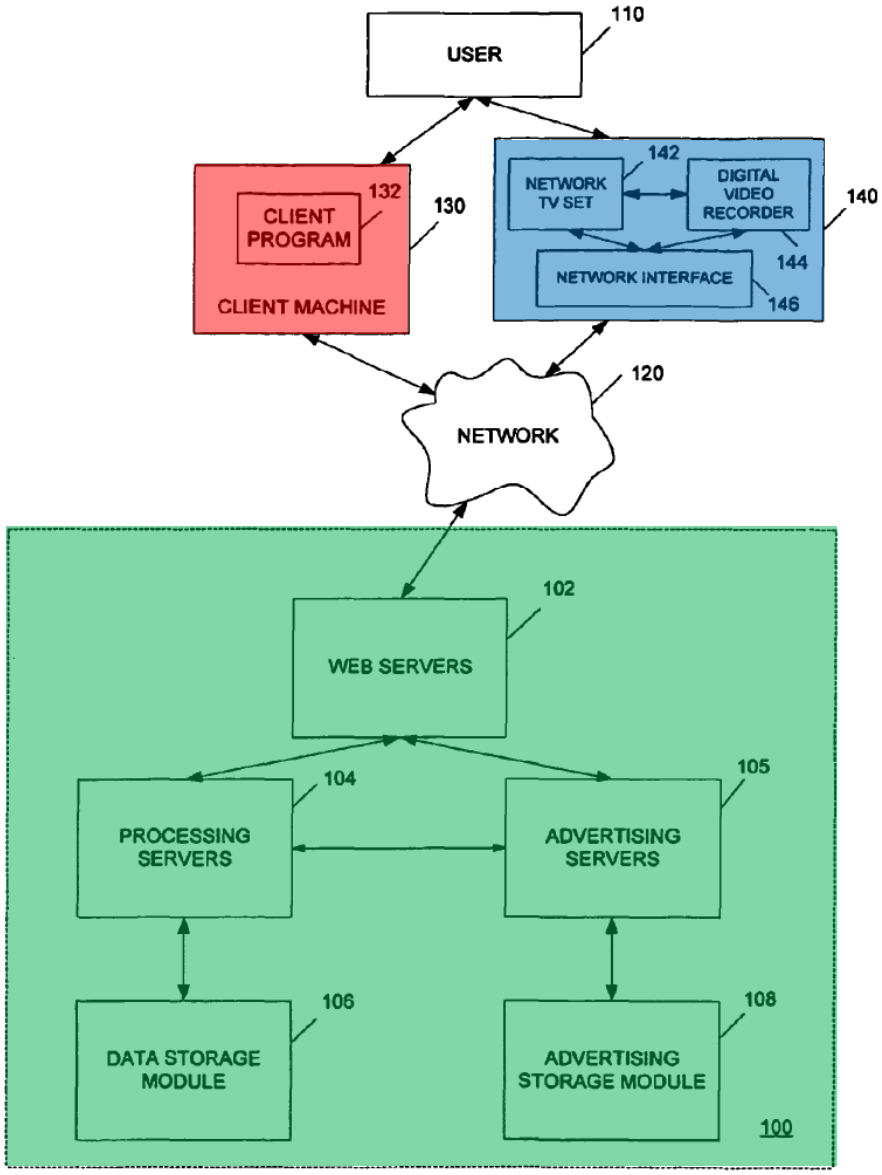

Ex. 1162, Fig. 2 (annotated)

95. User 110 accesses entity 100 through network 120 using client machine 130 assigned a unique IP address associated with the user. Ex. 1162, Abstract, 4:37-45, 5:3-11, 7:33-36, 7:60-67, 8:42-48, 10:35-40, 10:67-11:6. Similarly, the network-based television set 142 and the digital video recording device 144 are assigned respective unique IP addresses, where each of the unique IP addresses is associated with the user 110, by way of the user's device used to access the content service provider. Ex. 1162, 7:15-26, Fig. 1.

96. Madhavan discloses content service provider 100 deriving and storing user profile information based on the user's online activity, including linking user data (via a user profile) with IP addresses of devices associated with the user. Madhavan provides that such user data may include demographic data about the user 110, geographic data detailing user access locations, and behavioral data related to the user 110. *See* e.g., Ex. 1162, Abstract, 1:38-46, 2:62-3:55, 5:53-6:16, 8:37-41, 10:65-11:17.

97. Leveraging the user profile information, Madhavan's content service provider 100 directs targeted advertisements to the user 110 on the user's various devices (e.g., client machine 130 and media device 140) that connect to content service provider 100 through network 120. Ex. 1162, Abstract, 1:46-54, 3:55-63, 4:37-56, 5:28-36, 7:14-26, 8:26-33, 9:18-29, 10:3-9, 10:35-55, 11:34-37, 11:55-61, Figs. 5-9.

98. Therefore, it is my opinion that Madhavan is analogous to the ’260 Patent. I will provide more detail about Madhavan in my discussion of the claim limitations below.

B. US PAT. APP. PUB. NO. 2006/0039386 (“PARK”)

99. Park (Ex. 1163) is a U.S. Patent Application Publication filed on July 29, 2005, and published on February 23, 2006. I understand that Park qualifies as prior art under pre-AIA 35 U.S.C. §§ 102(b) and 102(e).

100. Park discloses an internet protocol (IP) installer for setting up a home network with multiple devices that share a single router to interface with a public network, such as the Internet. Ex. 1163, Abstract, ¶ [0003]. To address the shortage of public IP addresses, Park employs a system configured to use a common public IP address for multiple devices. Ex. 1163, ¶¶ [0009]-[0011]. Specifically, as shown in Figure 1 below, Park discloses using an IP sharing router 110 (**orange**) with a computer 120 (**red**) and a television set 134 (**blue**) connected to it in a home network. Ex. 1163, ¶¶ [0007]-[0008].

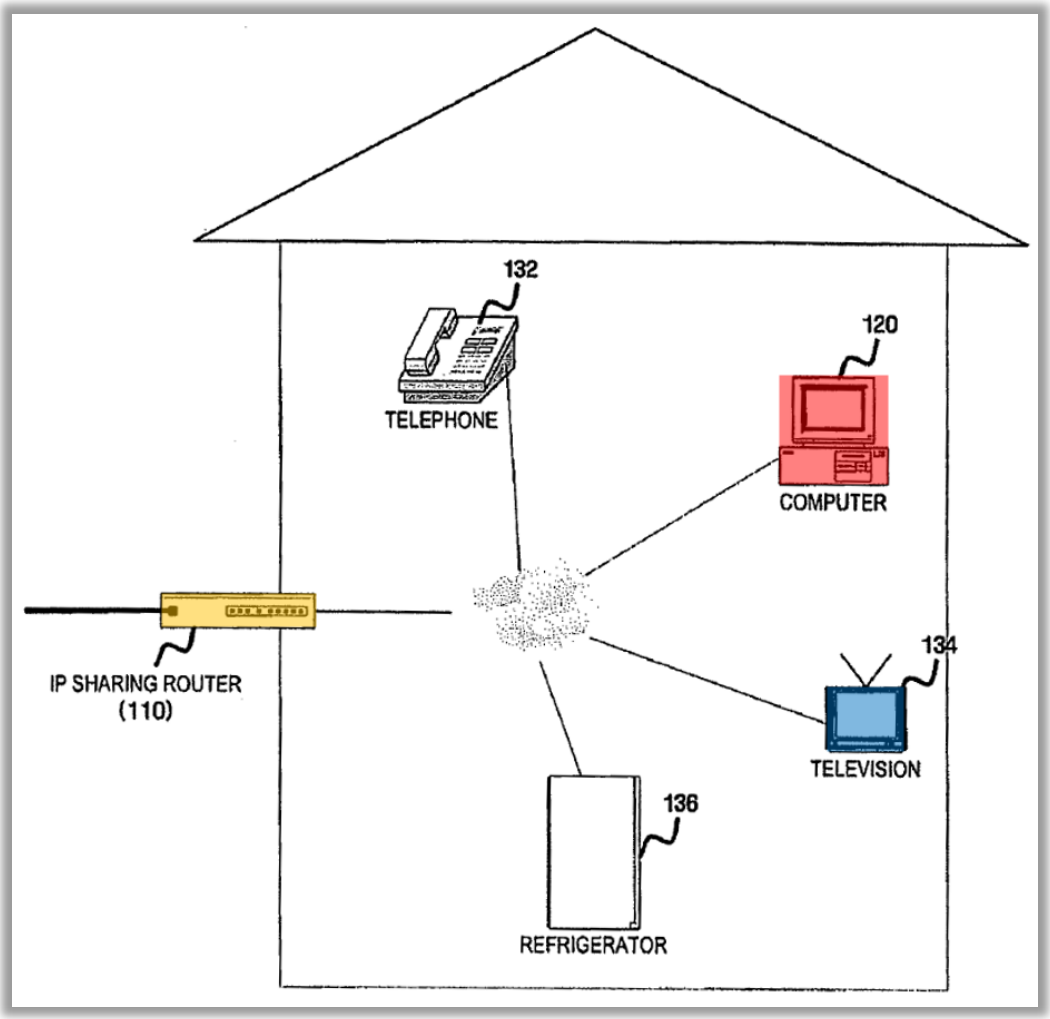

Ex. 1163, Fig. 1 (annotated)

101. Each of the devices home network above are assigned a unique private IP address by the IP sharing router 110, and these devices access the internet with a public IP address assigned to the IP sharing router 110. Ex. 1163, ¶¶ [0009]-[0011]. Park further discloses the system may include an IP installer to facilitate the assignment of the private IP addresses. Ex. 1163, ¶¶ [0012], [0014]-[0016]. As shown below in Figure 2, Park's IP installer 220 connects directly to the IP sharing

router 210 (orange), which is connected to multiple devices 232 (red), 234 (blue), and 236. Ex. 1163, ¶¶ [0029]-[0030].

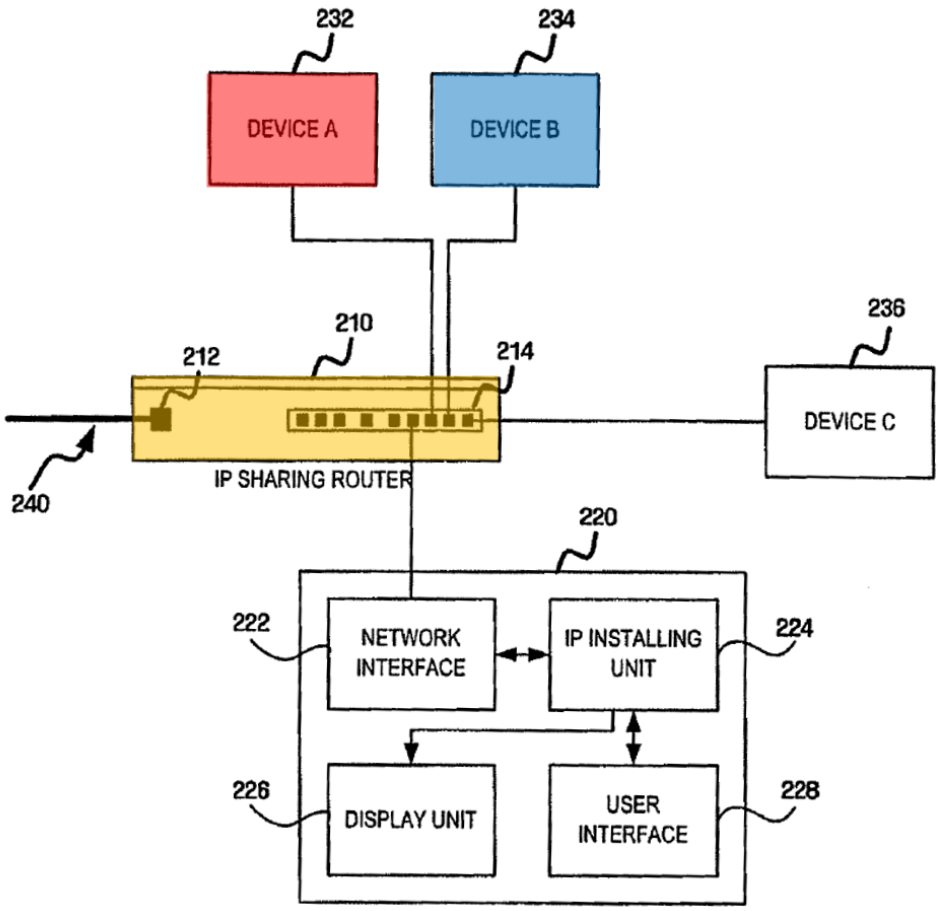

Ex. 1163, Fig. 2 (annotated)

102. Park's router includes network address translation (NAT) functions in which the router is assigned a public IP address by an Internet Service Provider (ISP), and the router assigns private IP addresses to the devices connected to the router. Ex. 1163, ¶¶ [0031], [0035]-[0038]. Park further discloses associating a respective TCP/IP port to each of the connected devices. Ex. 1163, ¶ [0038]. To transmit data between the internet and a device connected to the router, the router

translates the private IP address of the device to the public IP address and adds the device's port number. Ex. 1163, ¶ [0038]. For example, the router may be assigned a public IP address of 221.100.10.1 and assign a private IP address 198.126.10.3 for Device A 232 at port 7070 and private IP address 198.126.10.4 for Device B 234 at port 8080[1]. Ex. 1163, ¶ [0038]. If Device A would like to transmit data through the internet, Park's router translates the source of the data from its private IP address (198.126.10.3) to the public IP address of the IP sharing router 210 (221.100.10.1) and adds port 7070. Ex. 1163, ¶ [0038].

103. Therefore, it is my opinion that Park is analogous to the '260 Patent.

C. US PAT. APP. PUB. NO. 2004/0003292 ("KATO")

104. Kato (Ex. 1164) is a U.S. Patent Application Publication filed on July 1, 2003 and published on January 1, 2004. I understand that Kato qualifies as prior art under pre-AIA 35 U.S.C. §§ 102(b) and 102(e).

105. Kato discloses a system and method for identifying a user of a user terminal based on a source IP address, including providing a relationship or correspondence between a media access control (MAC) address, a private IP address, and a global/public IP address. Ex. 1164, Abstract.

---

[1] Paragraph [0038] of Park states, in part: "For example, when the port number of the IP installer 220 is 6060, the port number of device A 232 is 7070, **the port number of device B 234 is 7070**, and the port number of device C 236 is 9090…." (Emphasis added). It is clear from Park's example that reference to port "7070" for Device B is a typo.

106. As shown below in Figure 1, Kato describes a user identification system 10 that includes intelligent hubs (16*a*-16*d*) each of which is placed in a Local Area Network (LAN) 12*a* or 12*b* (**green**) and is provided with a plurality of physical ports to which a plurality of user terminals 14*a*-14*l* (**orange**) are connected respectively; routers 20*a* and 20*b* (**red**) for connecting the LANs 12*a* and 12*b* with the Internet 18; and an identification device 22 (**blue**) for identifying a user terminal—via the terminal's MAC address—that communicated on the Internet 18. Ex. 1164, ¶¶ [0030]-[0031], Fig. 1

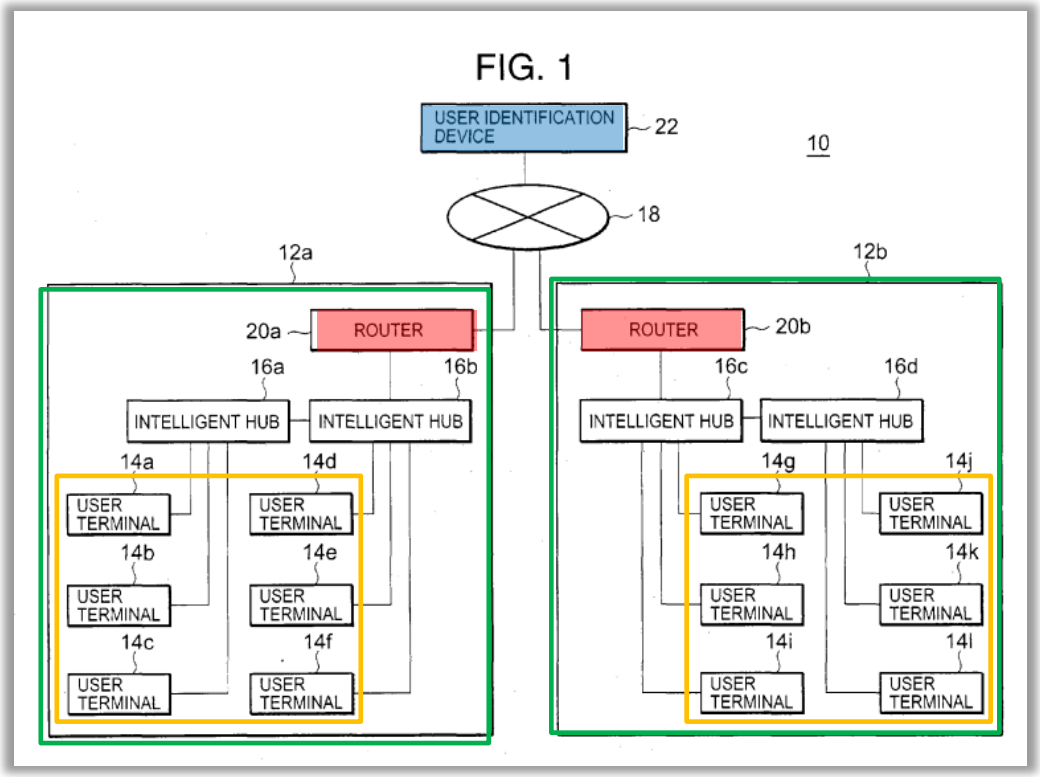

Ex. 1164, Fig. 1 (annotated)

107. Each of Kato's intelligent hubs (16*a*-16*d*) include a database storing first communication information indicating a correspondence between the physical ports of the intelligent hub and terminal identification information (e.g., MAC address) identifying a user terminal (e.g., user terminals 14*a*-14*l*) connected to the port. Ex. 1164, ¶ [0031]. Additionally, each of Kato's routers 20*a* and 20*b* store second communication information indicating a correspondence between the user terminal's MAC address and the private IP address assigned to the device by the respective router 20*a* and 20*b*. Ex. 1164, ¶ [0033]. In particular, Kato discloses that the routers 20*a* and 20*b* include a Dynamic Host Configuration Protocol (DHCP) server that assigns private IP addresses for each of the respective user terminals 14*a*-14*l*. Ex. 1164, ¶ [0033].

108. Kato's router further stores third communication information indicating a correspondence between the respective private IP address of the user terminals 14*a*-14*l* and the global/public IP address associated with the respective router 20*a*, 20*b*. This information is used by the router's address converter to perform network address translation to convert between the private IP addresses of the user terminals 14*a*-14*l* and the global/public IP address of the router 20*a*, 20*b*. Such conversions are used to relay data packets between a LAN and the Internet. Ex. 1164, ¶ [0035].

109. Therefore, it is my opinion that Kato is analogous to the '260 Patent.

D. US PAT. APP. PUB. NO. 2008/0120178 ("MARTINEZ")

110. Martinez (Ex. 1165) is a U.S. Patent Application Publication filed on November 22, 2006 and published on May 22, 2008. I understand that Martinez qualifies as prior art under pre-AIA 35 U.S.C. § 102(e).

111. Martinez discloses a system and method for collecting data and presenting media to a user. Ex. 1165, Abstract. Martinez was assigned to the same entity (i.e., Yahoo! Inc.) as Madhavan and were filed within two months of each other. Ex. 1165, cover page; Ex. 1162, cover page. As shown in Figure 1 below, Martinez describes a system 1 for delivering media using a data gathering module 10 that collects electronic data and provides it to a management module 20 that manages (e.g., creates and/or updates) a user profile 30 that is based on the electronic data. Ex. 1165, ¶¶ [0035], [0046]. Using the user profile 30, management module 20 determines media for presentation to a user via media output device 40. Ex. 1165, ¶¶ [0035], [0046]-[0047].

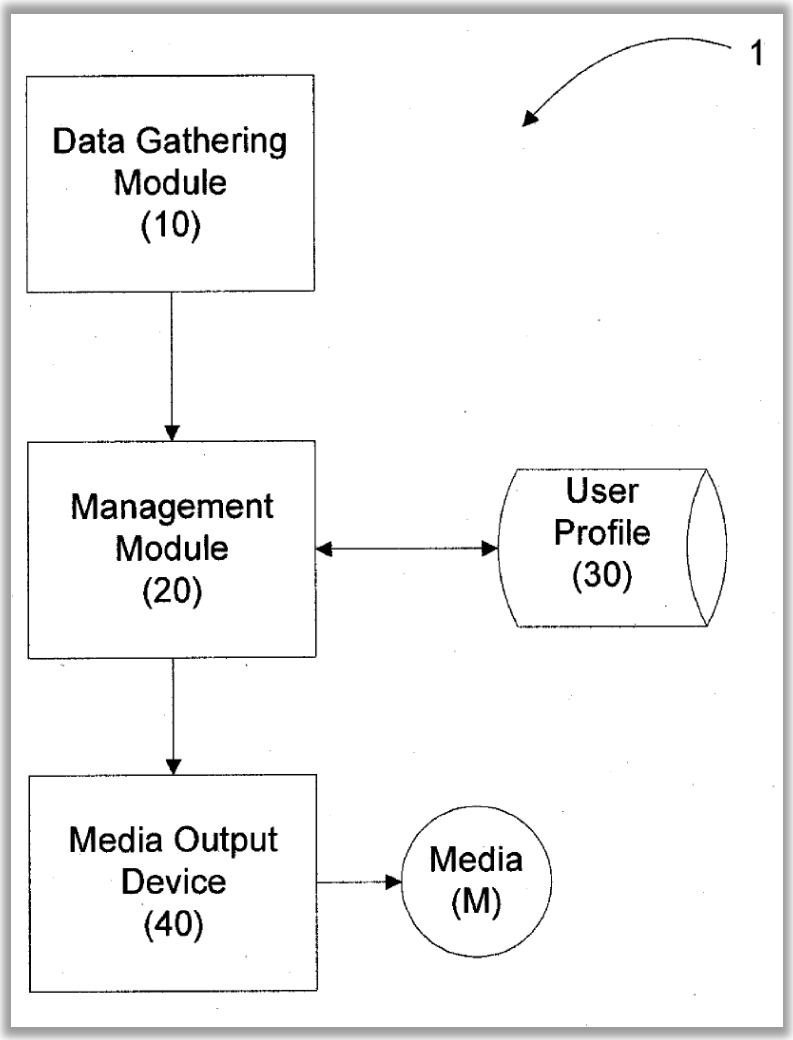

Ex. 1165, Fig. 1.

112. Martinez further explains that the user profile includes at least some of the electronic device data, including deduced information that is deduced based on spatial data, temporal data, and/or interaction data. The profile management module 20 may correlate the spatial data, the temporal data, and the interaction data to deduce at least some of the deduced information. Ex. 1165, ¶ [0004]. For example,

as shown in Figure 2[2] below, Martinez discloses that the data gathering module 10 communicates with spatial module 52 and temporal module 54 to collect electronic data. Ex. 1165, ¶ [0037]. In particular, the spatial module 52 may communicate spatial data to the data gathering module 10 and the temporal module 54 (**red**) may communicate temporal data to the data gathering module 10. Ex. 1165, ¶ [0037].

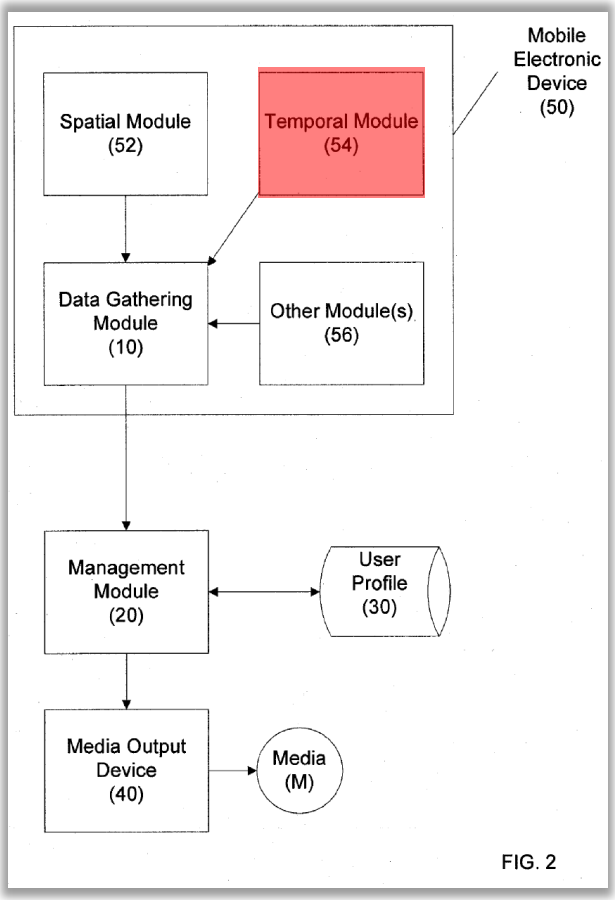

Ex. 1165, Fig. 2 (annotated)

[2] A POSA would have understood, in the context of Martinez's disclosures, that the features discussed in connection with Figures 1-4 do not show separate and distinct embodiments, but instead are different aspects and variations of the same media delivery system. Ex. 1165, ¶¶ [0014]-[0017].

113. Martinez discloses that the temporal module 54 may be any hardware and/or software operable to communicate temporal data (e.g., time stamps), and may uses a local clock or a network-based clock to provide the temporal data. Ex. 1165, ¶¶ [0040], [0049]. In particular, Martinez explains that the time based data (e.g., time stamps) relates to specific times and/or events associated with a user and/or the electronic device. Ex. 1165, ¶ [0051]. For example, the temporal data 15 may be passively collected time data (e.g., time data from a clock resident on the electronic device, or time data from a network clock), or may be actively collected time data, such as time data entered by the user of the electronic device (e.g., a user maintained calendar). Ex. 1165, ¶ [0051].

114. Further Martinez discloses leveraging the electronic device data (including the temporal data 15) to facilitate the media presentation to the user. In particular, as shown in Figure 3, the management module 20 may include a media presentation module 24 (**blue**) that utilizes at least a portion of the user profile 30 to facilitate selection of media for presentation to a user. In particular, the media presentation module 24 may correlate data of the user profile 30 and data associated with the media of the media inventory 26 to locate potential targeted advertising opportunities. Ex. 1165, ¶ [0047].

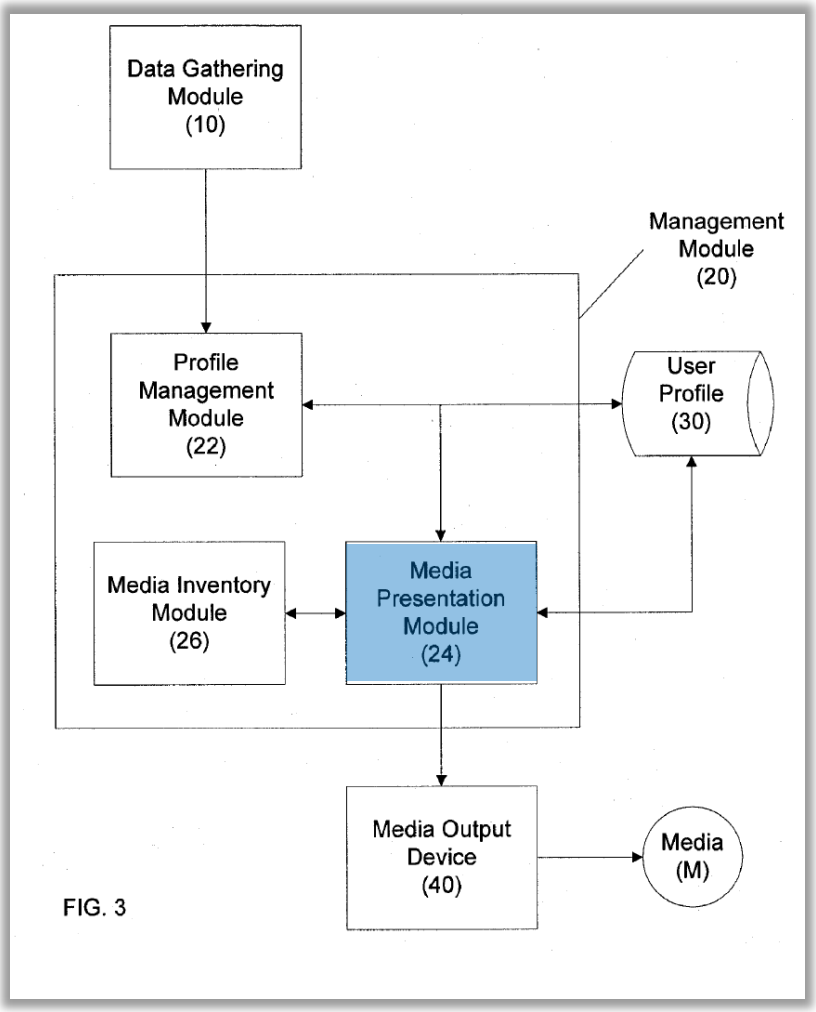

Ex. 1165, Fig. 3 (annotated)

115. Therefore, it is my opinion that Martinez is analogous to the '260 Patent.

E. US PAT. NO. 7,653,923 ("FLICKINGER923")

116. Flickinger923 (Ex. 1166) is a U.S. Patent filed December 27, 2000 and published October 18, 2001. I understand that Flickinger923 qualifies as prior art under 35 U.S.C. § 102(b).

117. Flickinger923 describes an advertisement management system (AMS) for providing targeted television advertisements. Ex. 1166, Abstract, 3:50-53. Flickinger923's system is configured to supply a service provider with "appropriate" advertisements at a particular time. Ex. 1166, 11:6-39. For example, Flickinger923's AMS tracks which ads are presented on which channels to provide a particular ad based on which channel was currently tuned to (i.e., active). *Id*. Flickinger923 discloses that in some embodiments an appropriate ad may be specifically requested from an upstream server for display. Ex. 1166, 10:65-11:39.

118. Therefore, it is my opinion that Flickinger923 is analogous to the '260 Patent.

F. US PAT. APP. PUB. NO. 2005/0096978 ("BLACK")

119. Black (Ex. 1134) is a U.S. Patent Application Publication filed November 5, 2003, and published May 5, 2005. I understand that Black qualifies as prior art under 35 U.S.C. § 102(b).

120. Black discloses a method and system designed to enhance video-on-demand (VOD) advertising by tailoring displayed ad campaigns to match viewer demographics, geographic locations, requested video content categories, and viewing times. Ex. 1134, ¶¶ [0008]-[0010], [0012], [0025]-[0026], Abstract. For example, each video available for user viewing is assigned one or more content categories associated with the video. Ex. 1134, ¶¶ [0034]-[0035], [0039]-[0042].

121. Advertisements are chosen to be shown based on the content categories of the video chosen by the user. Ex. 1134, ¶¶ [0035]-[0036]. This approach aims to present viewers with targeted advertisements that align with their interests and viewing habits, thereby increasing ad relevance and effectiveness. Ex. 1134, ¶¶ [0015]-[0016].

122. The system employs a Video-on-Demand (VOD) system paired with a method that utilizes a display device connected to a set-top-box (STB) at the viewer's home. Ex. 1134, ¶¶ [0013]-[0014]. This system identifies the viewer's demographic and geographical location through the STB's unique identifier. Ex. 1134, ¶¶ [0012]-[0014]. A server, linked to the STB, delivers video content upon request and uses a selector tool to categorize this content. Ex. 1134, ¶ [0014]. The selector also picks advertisements based on the video's content category, viewer demographics, location, and the timing of the request, ensuring that the ads displayed are tailored to the viewer's context. Ex. 1134, ¶ [0014].

123. Further, Black describes a campaign planner and ad selector mechanism within the VOD system. Ex. 1134, ¶¶ [0025]-[0030]. The campaign planner establishes rules for advertising campaigns, specifying which ads are shown to viewers based on criteria like video content category, viewer demographics, geographic location, and viewing time. Ex. 1134, ¶¶ [0025]-[0026]. These rules ensure that only relevant ads reach the viewer, enhancing targeted advertising

efforts. Ex. 1134, ¶ [0025]. The ad selector then applies these rules to identify suitable ads for each viewer, considering the specific video being watched, the viewer's location, demographic background, and when the video is viewed. Ex. 1134, ¶¶ [0026]-[0028].

124. Therefore, it is my opinion that Black is analogous to the ’260 Patent.

G. US PAT. NO. 7,376,714 B1 (“GERKEN”)

125. Gerken (Ex. 1167) is a U.S. Patent filed on April 1, 2004, and published May 20, 2008. Gerken claims priority from a provisional application filed on April 2, 2003. I understand that Gerken qualifies as prior art under 35 U.S.C. § 102(a).

126. Gerken describes a system and method for targeting online advertising based on IP addresses assigned to users. Ex. 1167, 3:16-53, 4:31-45, Abstract. The method enables the selective acquisition of ad inventory from websites, using IP address-to-user attribute vectors, including zip codes provided by ISPs, to match advertising content with user attributes. Ex. 1167, 7:8-53.

127. Advertisers supply campaign content targeting specific user attributes, and the system identifies users to receive ads by matching IP addresses with campaign targeting attributes. Ex. 1167, 5:19-43. Web publishers are notified of the IP addresses for which ads are to be shown, facilitating targeted advertising. Ex. 1167, 5:19-43.

128. One reoccurring issue is that IP addresses dynamically change when the user is online. Ex. 1167, 5:44-57. Further, the IP addresses are continually updated and changed based on user activity or changes to data. Ex. 1167, 4:59-5:57. Therefore, the method updates the IP addresses as the IP addresses change over time. Ex. 1167, 4:59-5:57. In this way, current and relevant ad campaigns may be chosen based on the updated IP address. Ex. 1167, 3:16-53, 6:55-7:18.

129. Therefore, it is my opinion that Gerken is analogous to the '260 Patent.

H. US PAT. APP. PUB. NO. 2005/0096980 ("KONINGSTEIN")

130. Koningstein (Ex. 1124) is a U.S. Patent Application Publication filed December 31, 2003 and published on May 5, 2005. I understand that Koningstein qualifies as prior art under 35 U.S.C. § 102(b).

131. Koningstein discloses a method of delivering targeted advertisements. Ex. 1124, Abstract, ¶¶ [0039]-[0040], [0043]-[0048]. Koningstein's method includes advertisement providers that provide ads in web pages displayed to end users based on pricing parameters. *Id.*, ¶¶ [0043]-[0045], Fig. 3. Koningstein discloses that in some examples, advertisers are "only obligated to pay if the end user meets some performance parameter" and/or "some [] monetization event occurs." *Id.*, ¶ [0045].

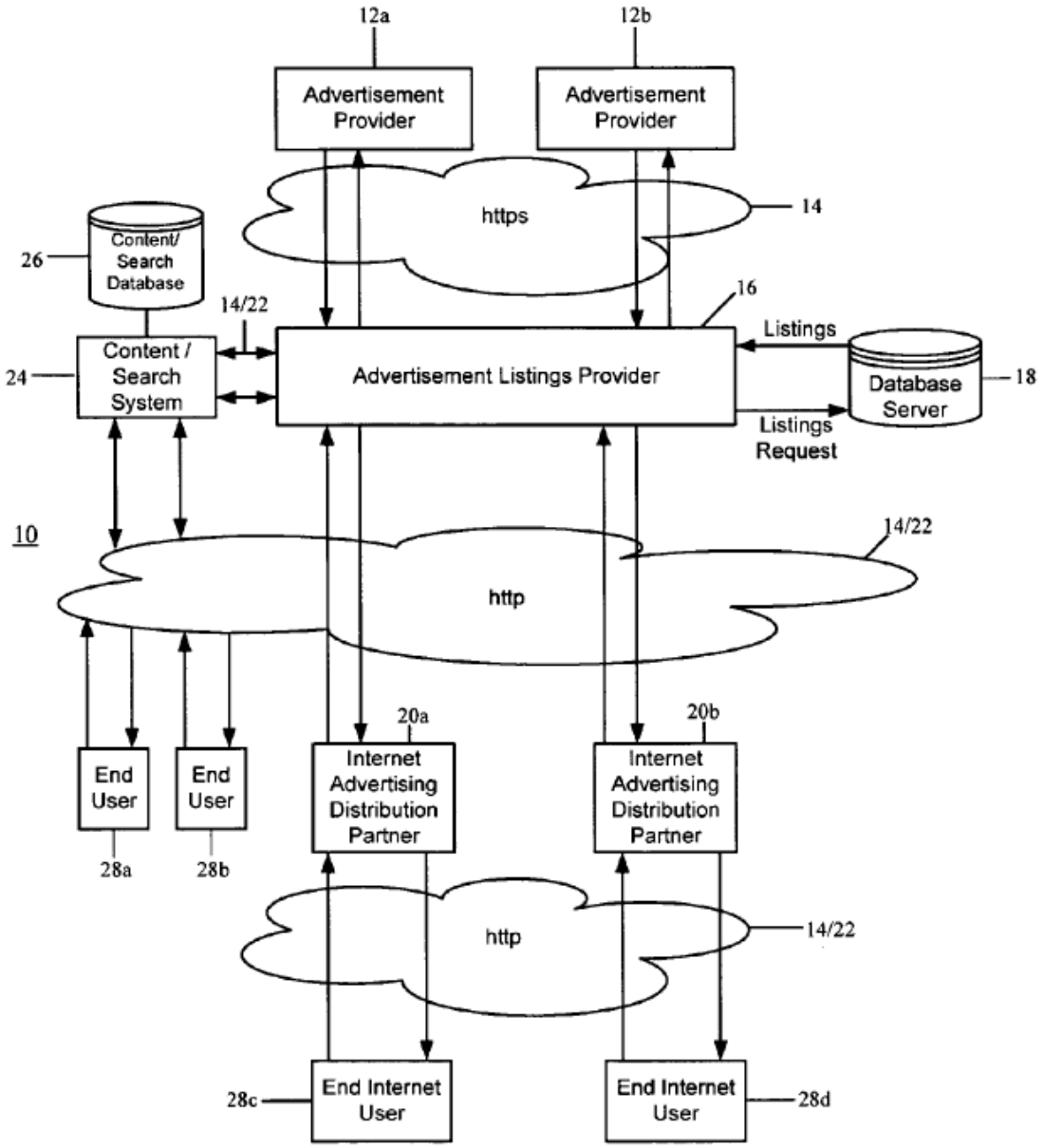

Fig. 3

Ex. 1124, Fig. 3

132. Therefore, it is my opinion that Koningstein is analogous to the ’260 Patent.

I. US PAT. NO. 5,740,252 ("MINOR")

133. Minor (Ex. 1169) is a U.S. Patent filed on October 13, 1995, and published on April 14, 1998. I understand that Minor qualifies as prior art under 35 U.S.C. § 102(b) and § 102(e).

134. Minor describes a method for transferring private demographic information between hyperlink destinations. Ex. 1169, Abstract. This process involves correlating a computer operator with demographic data, encrypting this information using a remote site's encryption key, and forming an encoded demographic hyperlink transfer request. Ex. 1169, Abstract.

135. This request is then used to access a remote computer, which decrypts the information for various purposes, including generating customized responses. Ex. 1169, Abstract. This system allows for the efficient and private transfer of demographic data across networks, enhancing personalized web experiences without compromising user privacy. Ex. 1169, 2:38-41.

136. The demographic data may comprise information including names, addresses, incomes, ages, computer devices, purchasing behaviors, employment, and other personal data. Ex. 1169, 3:44-4:53. After connecting to a webpage and receiving the reply website, the demographic information is encrypted, based on a remote site encryption key and associated with the remote site's address. Ex. 1169, 5:24-60. The remote site's address and the encrypted data are connected with a

hyperlink. Ex. 1169, 5:54-6:5. The user's device automatically processes the remote site address information, and the encrypted data is automatically transmitted to the remote site for decryption. Ex. 1169, 5:54-6:5.

137. Therefore, it is my opinion that Minor is analogous to the '260 Patent.

J. US PAT. APP. PUB. NO. 2008/0201731 ("HOWCROFT")

138. Howcroft (Ex. 1116) is a U.S. Published Patent Application. Howcroft was filed on February 15, 2007 and published on August 21, 2008. I understand that Howcroft qualifies as prior art under 35 U.S.C. § 102(e).

139. Howcroft describes a system and method for delivering targeted advertising to users across multiple devices associated with a single user. Ex. 1116, Abstract. The method monitors user activities across various platforms to develop a detailed advertising profile for each user, which includes product interest scores in specific categories. Ex. 1116, Abstract. One way in which Howcroft teaches tracking users or devices across sessions or networks is through the use of cookies. Ex. 1116, ¶ [0061]. For example, Howcroft teaches that an HTML cookie may be used so that a user does not have to continuously identify or authenticate themselves. Ex. 1116, ¶ [0061]. Further, the method selects advertisements based on these profiles and the current context of the user, such as device type and location. Ex. 1116, ¶¶ [0029]-[0030]. Howcroft thus discloses an approach to gathering user data across devices

and networks to deliver highly targeted and more relevant ads. Ex. 1116, ¶¶ [0021]-[0022], [0030]-[0034].

140. Therefore, it is my opinion that Howcroft is analogous to the '260 Patent.

K. US PAT. APP. PUB. NO. 2007/0206773 ("BRANAM")

141. Branam (Ex. 1170) is a U.S. Published Patent Application. Branam was filed on October 2, 2006, and published on September 6, 2007. Branam claims priority from a provisional application filed on September 30, 2005. I understand that Branam qualifies as prior art under 35 U.S.C. § 102(a) and § 102(e).

142. Branam describes a service providing targeted advertising to users based on monitoring the user's online browsing and information regarding the user's device. Ex. 1170, ¶¶ [0034], [0071]-[0080], Abstract. The method generates customized content, such as targeted advertisements, based on the device identifiers. Ex. 1170, ¶¶ [0060]-[0062], [0065], [0071]-[0072]. After determining the targeted ads, the system sends the advertisements to a user device via the user device's unique identifier. Ex. 1170, ¶¶ [0053]-[0054], [0060]-[0062], [0080].

143. For example, Branam explains that a serial number may be to user devices, such as a set-top box or a SIM number, and used as a device identifier. Ex. 1170, ¶¶ [0043]-[0045]. Branam also discloses that other types of device identification can be used including usernames and user-assigned device names. Ex.

1170, ¶¶ [0053]-[0054], [0063], [0080]. This information may be associated with one another in a user account, and used to identify user and corresponding device the user is currently using to generate and select user-customized content. Ex. 1170, ¶¶ [0043]-[0048], [0053]-[0054], [0060]-[0063], [0079]-[0080].

144. Therefore, it is my opinion that Branam is analogous to the ’260 Patent.

X. THE RELEVANT ART AND LEVEL OF ORDINARY SKILL IN THE RELEVANT ART

145. In my opinion, the relevant field of art for the ’260 Patent is a mercantile method of targeted delivery of advertisements for use in a data communications topology. Ex. 1101, Abstract, 1:7-11, 7:59-65.

146. I understand that obviousness is determined from the vantage point of a hypothetical person having ordinary skill in the art (POSA) at the time of the alleged invention, which, for purposes of this declaration, I have assumed is the earliest claimed priority date of April 17, 2007.

147. I understand that the following four factors may be considered when identifying the appropriate level of a POSA: (i) the types of problems encountered by those working in the field and prior art solutions thereto; (ii) the sophistication of the technology in question, and the rapidity with which innovations occur in the field; (iii) the educational level of active workers in the field; and (iv) the educational level of the inventor. I understand that a POSA is one who is presumed to be aware

of all pertinent art, thinks along conventional wisdom in the art, and is a person of ordinary creativity.

148. It is my opinion that, for the ’260 Patent, a POSA would have had a bachelor’s degree in electrical engineering, computer engineering, computer science, or a similar discipline, and at least two years of relevant industry or research experience, including experience with data communications.

149. I worked in the relevant field with persons meeting this definition of a POSA at, and leading up to, the time of the alleged invention of the ’260 Patent (i.e., April 17, 2007). Therefore, I am familiar with the knowledge and skills that such persons had at the time. In my opinion, a POSA’s skill set would have included client level and server level programming skills. More specifically, a POSA’s skill set would have included computer programming languages and markup languages (*e.g.*, C, C++, C#, Java, JavaScript, Visual Basic.NET, HyperText Mark-up Language (HTML), XML) and knowledge of the HyperText Transfer Protocol (HTTP). A POSA’s skill set would have also included client-server architecture and database design skills.

150. In this Declaration, wherever I refer to a POSA, it should be understood that I’m referring to a hypothetical person at the time of the alleged invention of the ’260 Patent (i.e., April 17, 2007) meeting the description I have provided in this section.

XI. CLAIM CONSTRUCTION

151. I understand that my analysis requires an understanding of the scope of the claims of the ’260 Patent. I understand that claim terms subject to *inter partes* review, absent some other definition provided in the patent, are given their plain and ordinary meaning to a POSA in light of the patent specification. I understand that Petitioner’s position is that plain and ordinary meaning should apply to all terms for purposes of this proceeding. Therefore, in my analysis below, I have assumed that all claim terms are given their plain and ordinary meaning as would have been understood by a POSA reading the patent specification at the time of the claimed invention (i.e., April 17, 2007). In addition, my analysis also addresses alternative constructions for the following terms in view of the related proceedings and prior claim constructions.

XII. ANALYSIS

152. For the reasons that I discuss in detail below, it is my opinion that, at least by April 17, 2007 (the earliest claimed priority date), claims 1-152 of the ’260 Patent would have been obvious to a POSA. In short, it is my opinion that:

- Claims 1-9, 12-14, 17-18, 21-22, 44, 54-62, 71-88, 91-93, 96-97, and 100-101 would have been obvious based on Madhavan-Park;
- Claims 1-9, 12-14, 17-18, 21-22, 44-48, 52, 54-65, 68, 71-88, 91-93, 96-97, and 100-101 would have been obvious based on Madhavan-Park-Kato;

- Claims 15-16, 24-29, 31-40, 42, 94-95, 103-104, 106, 116-126, 128, and 137-152 would have been obvious based on Madhavan-Park-Martinez;
- Claims 15-16, 24-29, 31-40, 42, 94-95, 103-104, 106-110, 114, 116-126, 128-131, 134, and 137-152 would have been obvious based on Madhavan-Park-Kato-Martinez;
- Claims 19-20, and 98-99 would have been obvious based on Madhavan-Park-Flickinger923;
- Claims 19-20, and 98-99 would have been obvious based on Madhavan-Park-Kato-Flickinger923;
- Claims 10 and 89 would have been obvious based on Madhavan-Park-Black;
- Claims 10 and 89 would have been obvious based on Madhavan-Park-Kato-Black;
- Claims 11 and 90 would have been obvious based on Madhavan-Park-Kato-Gerken;
- Claims 30 and 43 would have been obvious based on Madhavan-Park-Martinez-Koningstein;
- Claims 30 and 43 would have been obvious based on Madhavan-Park-Kato-Martinez-Koningstein;

- Claims 41, 105, and 127 would have been obvious based on Madhavan-Park-Martinez-Minor;
- Claims 41, 105, and 127 would have been obvious based on Madhavan-Park-Kato-Martinez-Minor;
- Claims 23, 66, 70, and 102, would have been obvious based on Madhavan-Park-Howcroft;
- Claims 23, 49, 50, 66, 70, and 102, would have been obvious based on Madhavan-Park-Kato-Howcroft;
- Claims 132, and 136 would have been obvious based on Madhavan-Park-Martinez-Howcroft;
- Claims 111-112, 132, and 136 would have been obvious in view of Madhavan-Park-Kato-Martinez-Howcroft;
- Claims 51, 53, 67, and 69 would have been obvious in view of Madhavan-Park-Branam;
- Claims 51, 53, 67, and 69 would have been obvious in view of Madhavan-Park-Kato-Branam;
- Claims 133 and 135 would have been obvious in view of Madhavan-Park-Martinez-Branam; and
- Claims 113, 115, 133, and 135, would have been obvious in view of Madhavan-Park-Kato-Martinez-Branam.

153. Further, I understand that Petitioner has assigned labels (e.g., [1PRE], [1A], [1B], etc.) to different limitations of the claims to facilitate analysis of the claims. Accordingly, in my analysis below, I have referred to the claim limitations using those same labels, which are shown in the Claim Listing Appendix attached to this declaration as Appendix C.

A. GROUNDS A-B: MADHAVAN IN VIEW OF PARK AND/OR MADHAVAN IN VIEW OF PARK AND KATO

154. The '260 Patent is related to "a method for delivering targeted television advertisements based on online behavior," where "[u]sing user profile information derived from online activity from one of the online access IP addresses, a television advertisement is selected . . . ." Ex. 1101, Abstract, 7:59-65; *see also id.*, 1:7-11.

155. As I show and explain in further detail in the subsections below, the combination of Madhavan in view of Park, and the combination of Madhavan in view of Park and Kato render obvious both using user identification information (e.g., device identifiers such as IP addresses) to associate mobile computing devices that access the Internet from a (shared) router and automatically sending targeted advertisements to those computing devices based on the mutual sharing of information indicating user actions and online activity performed on the computing devices. For example, the sending of a targeted advertisement to a set-top box is based on profile information (e.g., user data) obtained from an associated mobile

computing device. The results of the combinations teach independent claim 1 as well as dependent claims 2-9, 12-14, 17-18, 21-22, 44-48, 52, 54-65, 68, 71-88, 91-93, 96-97, and 100-101.

156. Madhavan's system "facilitate[s] targeting of advertisements based on mutual information sharing between devices over a network." Ex. 1162, 1:7-11, 1:36-2:3, Abstract. As seen below in Figure 1 from Madhavan, Madhavan's system includes a user's client machine 130 (**blue**) and media device 140 (**green**), which are used by the user to initiate various events and actions during online sessions. Ex. 1162, 2:62-3:63, 4:26-42, 7:7-13, 8:1-8, 12:21-48. The media device 140 may include a network-based television set 142 and/or a digital video recording device 144. Ex. 1162, 5:28-36, 7:7-26. The data collected from a user's device is stored, and associated with each other by a network-based content and advertising entity 100 (**red**). Ex. 1162, 4:46-56, 5:18-6:12, 7:2-9:67, Figs. 1-3, 5-6. Madhavan describes that the content and advertising entity 100 (also referred to herein as the "content service provider 100," "content server 100," or "entity 100") is a network content service provider, that includes multiple servers (**orange**), such as one or more front-end web servers 102 and one or more back-end processing servers 104 and one or more advertising servers 105. Ex. 1162, 4:26-56, Fig. 2. The multiple servers of content server 100 enables "automatic matching of advertising information to events or actions and interests of users," for example, selecting and

delivering advertisements to the user's devices that are related to current and/or previously-stored online activity of the user. Ex. 1162, 4:26-65, 5:18-6:12, 7:2-9:67, 10:1-29, 10:65-12:20, Figs. 1-3, 5-6.

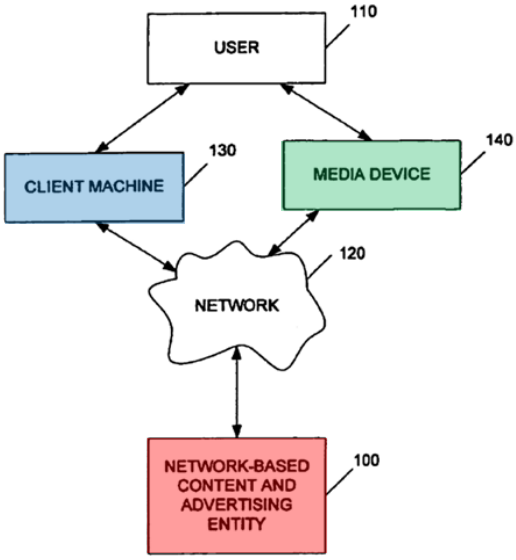

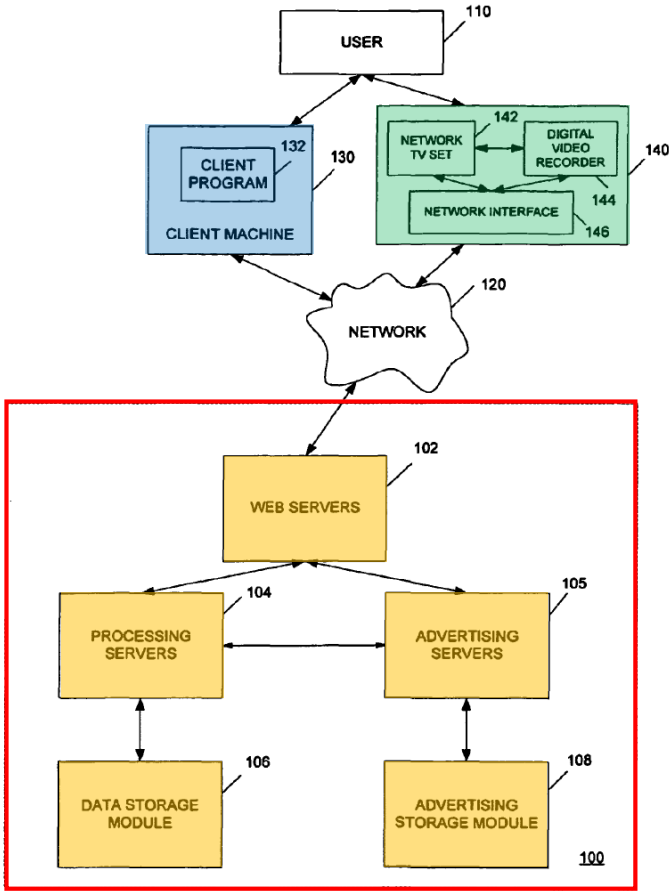

Ex. 1162, Fig. 1 (annotated) Ex. 1162, Fig. 2 (annotated)

157. However, as shown above, the user's devices do not necessarily connect to the Internet from the same access point. For example, Madhavan teaches that client machine 130 access the content server 100 by being directly coupled to network 120. Ex. 1162, 4:37-43, 5:3-11. By contrast, both the network-based television set 142 and the digital video recording device 144 may be coupled

to the content server 100 via the network 120 and a network interface module 146. Ex. 1162, 5:28-36, Fig. 2.

158. As I explain further in the analysis below, where I apply Madhavan to the claims, it is my opinion that Madhavan's system would render many features of the '260 Patent's claims obvious to a POSA. To any extent that Madhavan does not explicitly disclose particular features it is my opinion that it would have been obvious to a POSA to combine one or more additional prior art references described herein to render those features obvious, as I describe in more detail throughout Section XII.

159. As I explain above, the user devices in Madhavan's system do not necessarily connect to the Internet from the same access point. Ex. 1162, 4:37-43, 5:3-11, 5:28-36, Figs. 1, 2. However, Park recognizes that a user's devices may connect to the Internet via a common access point within a home network. In particular, as shown below in Figure 2, Park describes a system that comprises a local or home network that is configured to use an IP sharing router (**purple**). Park's IP sharing router (e.g., router 110/210) assigns a private IP address to each user device (**pink**) within the home network (e.g., Devices A-C) for use within the local or home network, and connects the user's devices to a different, external network (e.g., the Internet) using a common, public IP address. Ex. 1163, ¶¶ [0003], [0007]-[0012], [0029]-[0030], [0035]-[0038], Figs. 1-2. As I describe in further detail

below, it is my opinion that a POSA would have found it obvious to apply the above teachings of Park to Madhavan's system so that, when the Madhavan-Park system communicates with a user's devices that have accessed the network (e.g., Internet) using a common IP address, the system associates the devices based, in part, on their common IP address.

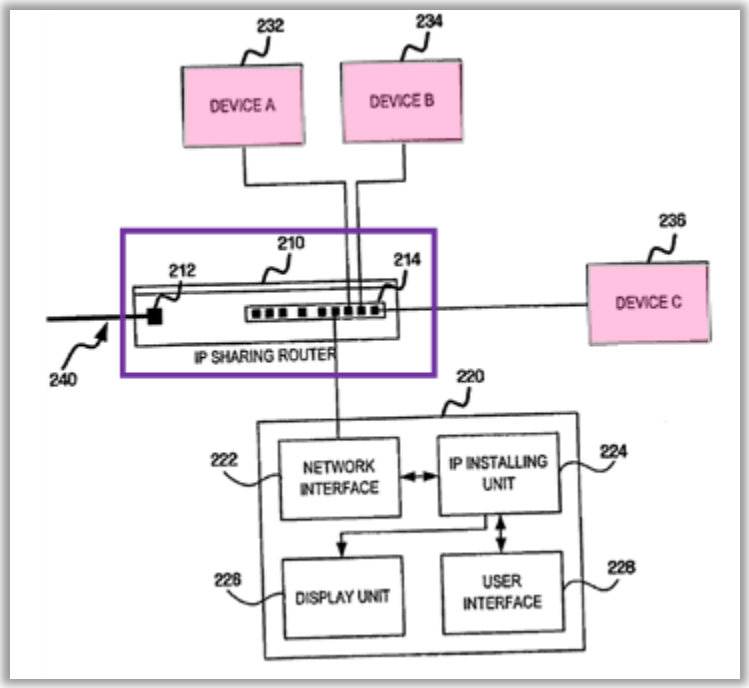

Ex. 1163, Fig. 2 (annotated)

160. The Madhavan-Park system associates different user devices based on identification information that includes a common IP address and port numbers, but does not explicitly teach the use of MAC addresses as a basis for its associations. Kato teaches using a common IP address to associate multiple devices based on various device identifiers, such as IP addresses, port numbers, and MAC addresses. Ex. 1164, ¶¶ [0006], [0009]-[0011], [0031]-[0036], [0038]-[0046], [0049]-[0057],

[0063]-[0070]. As I describe in further detail below, it is my opinion that a POSA would have found it obvious to apply the teachings of Kato to the Madhavan-Park system in order to quickly correlate user data collected from a user's device with a particular user profile by leveraging a determined relationship between a MAC address of the user device and a common/global IP address used by the device, and to readily correlate user event/action data collected from the user's device with the user's profile across different online sessions.

1. Independent Claim 1

161. As I explain below, Madhavan-Park and Madhavan-Park-Kato teach claim 1, and a POSA would have found it obvious to combine Madhavan and Park, and to combine Madhavan, Park and Kato.

a) [1PRE]: "A method implemented using a programmed hardware computer system, the method comprising:"

162. Assuming the preamble [1PRE] imposes a limitation, in my opinion it is disclosed by Madhavan.

163. Madhavan teaches "system[s] and method to facilitate targeting of advertisements based on mutual information sharing between devices over a network." Ex. 1162, Abstract. Madhavan's system includes a network content and advertising entity 100 (**red**) ("**computer system**") that is a network content service provider and, as I show below in Figures 1 and 2 of Madhavan, includes multiple

different servers (orange). Ex. 1162, 4:26-65, 5:18-27, 8:5-8, 8:53-56, 12:21-53, Figs. 1-2.

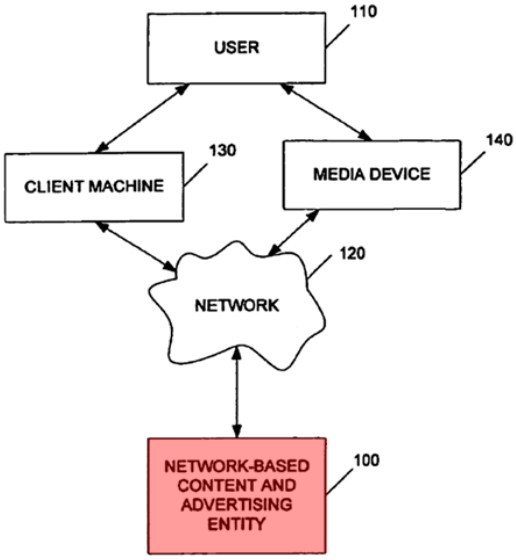

Ex. 1162, Fig. 1 (annotated)

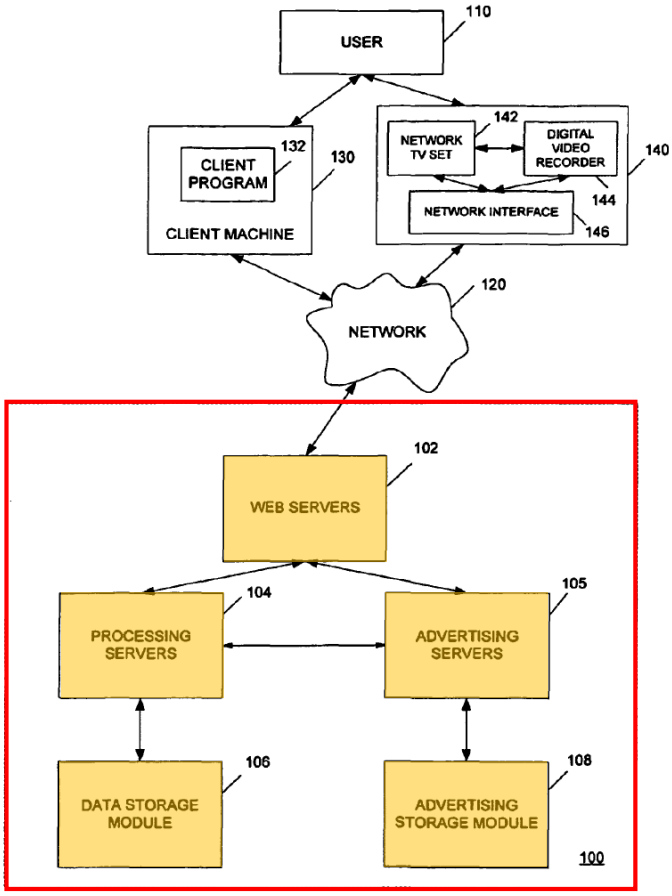

Ex. 1162, Fig. 2 (annotated)

164. Madhavan's content server 100 includes "one or more front-end web servers 102, which may, for example, deliver web pages to multiple users … deliver images to be displayed within the web pages, deliver content information to the users in various formats, and deliver advertising information to the users." Ex. 1162, 4:46-56. "The entity 100 further includes one or more back-end servers, for example, one

or more processing servers 104 and one or more advertising servers 105 . . . to store advertisements to be transmitted and displayed for users over the network 120." Ex. 1162, 4:57-65. These servers of content server 100 are computer based and Madhavan's system implements its method through "software programs executed upon some form of processing core (such as the CPU of a computer) or otherwise implemented or realized upon or within a machine or computer readable medium" ("**programmed hardware computer system**"). Ex. 1162, 4:26-36, 12:21-29, 12:41-53, Figs. 1-3, 12. For example, Madhavan describes "a diagrammatic representation of a machine in the exemplary form of a computer system 1200 within which a set of instructions, for causing the machine to perform any one of the methodologies" described in Madhavan. Ex. 1162, 12:21-25, Fig. 12. Madhavan's exemplary computer system 1200 includes "machine-readable medium 1224 on which is stored a set of instructions (i.e., software) 1226 embodying any one, or all, of the methodologies described" in Madhavan. *See* Ex. 1162, 12:41-62.

165. In my opinion, a POSA would have understood, in the context of Madhavan's disclosures, that the features discussed in connection with Figures 5-11 are attributed and related to operations of the Madhavan system shown in Figures 1-3, and 12 are the same system that comprises one or more processing elements that collectively perform the claimed "method" as discussed herein for the remaining

elements of claim 1. While Madhavan refers to certain features as "one embodiment" or an "alternate embodiment" (*see* e.g., Ex. 1162, 2:22-46, 7:12-32, 8:34-37, 9:25-35, 10:65-67) such disclosed features of Madhavan may be attributed to other aspects of Madhavan's disclosed invention. For example, the processes of Figures 5-10 involve operations performed by the one or more processing elements of content server 100 and are described in connection with Madhavan's Figures 1-2. *See* Ex. 1162, 4:26-5:17 (Figs. 1-2), 6:66-8:33 (Fig. 5), 8:34–9:67 (Fig. 6), 10:1–29 (Fig. 7), 10:30–64 (Fig. 8), 10:65-11:26 (Fig. 9), 11:27-67 (Fig. 10). While the processes of Figures 6, 9 and 10 are discussed as "alternate embodiment[s]," they each involve variations of how one or more processing elements of Madhavan's entity 100 are involved in the processes to target advertisements based on information shared between user devices (Fig. 6), how user identification and action data are processed (Fig. 9), and the matching of advertisements to user action data (Fig. 10) like that described for Figures 5 and 7-8. Similarly, Madhavan's computer system 1200 (Fig. 12) is an example of a machine having a "set of instructions, for causing the machine to perform any one of the methodologies discussed above, may be executed." Ex. 1162, 12:21-25. To the extent it is argued that Madhavan's Figures 5-11 represent different embodiments, a POSA would still have found it obvious and been motivated to combine these embodiments to provide a method of targeted advertising across multiple user devices based on user profile information.

Such a combination would not have required a leap of inventiveness because Figures 5-11 are adjacent to one another in Madhavan, they reference back to Figures 1-3, and they describe the basic operations the system such as collecting user profile information, storing that information in user profiles, and using that information to select and direct advertisements to a user STB. Ex. 1162, 2:14-46, 6:66-11:61, Figs. 5-11. Likewise, Figures 7-10 are adjacent to one another in Madhavan, they reference back to Figures 5-6 and they describe basic operations of the system such as processing information received from the content service provider (e.g., content service provider 100), and facilitating the matching of advertisements to user data received at the content service provider. *Id.* This would have been nothing more than the simple combination of prior art elements according to known methods to yield predictable results. A POSA would have been motivated to combine these embodiments to improve the ability of Madhavan's system to facilitate the targeting of advertisements based on information shared between the user's various devices. To the extent required, any such changes to achieve this functionality would be primarily limited to software modifications, which would have been well within the skill set of a POSA.

166. Thus Madhavan renders obvious Element [1PRE].

b) [1A]: "(a) for each of a multitude of users, with the computer system, electronically associating an online access IP address of the user and a set-top box IP address of that user based on a common IP address, wherein network traffic is routed via the common IP address to both an online user interface device and a set-top box of that user; and"

167. As shown above regarding Element [1PRE], Madhavan teaches implementing a "method to facilitate targeting of advertisements based on mutual information sharing between devices over a network, such as the Internet." Ex. 1162, 1:7-11, Abstract. The content server 100 of Madhavan's system may accessed by multiple users. *See* e.g., Ex. 1162, Abstract, 1:36-43, 2:62-67, 4:46-56, 11:62-67.

168. The various functions and steps performed by Madhavan's modified systems, which I discuss in more detail below with respect to Madhavan, are performed by one or more processing elements of the content server 100 ("**with the computer system**") for each of the various users ("**for each of a multitude of users**") that connect to the content provider 100 via their respective user devices. *See* Ex. 1162, Abstract, 1:36-43 ("In some embodiments described in detail below, users access an entity, such as, for example, a content service provider or network portal, over a network, such as the Internet, and further initiate various events, which are subsequently captured by selective processing servers within the network-based entity"); 1:44-54, 2:62-67, 4:27-5:2.

169. As shown below in Figure 1 and Figure 2, Madhavan discloses that media device 140 (**green**) and client machine 130 (**blue**) access the content server 100 (e.g., the network-based content entity) (**red**) via network 120 (e.g., Internet). Ex. 1162, 4:26-65, 5:3-32, 8:5-8, 8:53-56, 12:21-53, Figs 1-2.

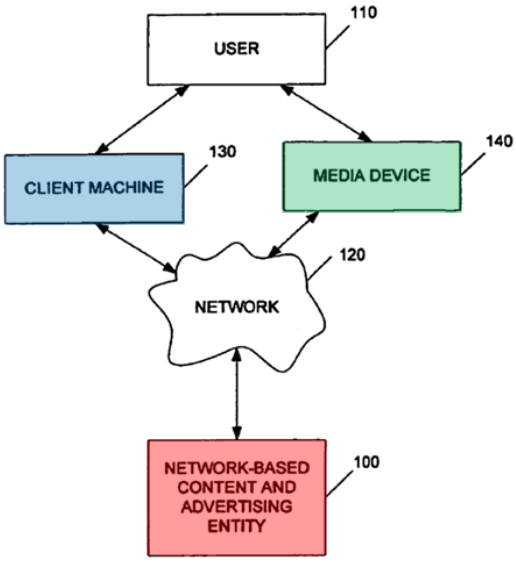

Ex. 1162, Fig. 1 (annotated)

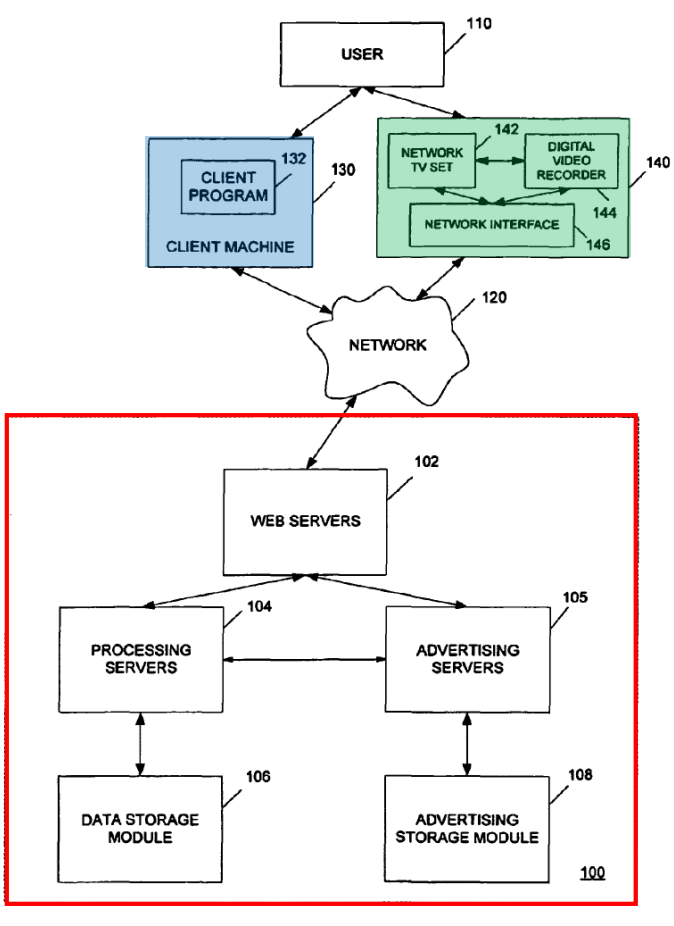

Ex. 1162, Fig. 2 (annotated)

170. Madhavan discloses that client machine 130 may be "a cellular phone, a PDA or other wireless device" that is used to access the content server 100 via the Internet. Ex. 1162, 5:3-17, 7:60-63, 8:42-44. The '260 Patent expressly defines an "online user interface device" as "any user interface device used to access a remote

network such as the Internet, including … a cell phone or mobile handset." Ex. 1101, 2:31-35. Thus, the client machine 130 in Madhavan satisfies the '260 Patent's definition of the claimed "**online user interface device**."

171. Madhavan teaches that its media device 140 includes "a network-enabled television set 142, such as an Internet TV set," and "a digital video recording device [DVR] 144." Ex. 1162, 5:28-32. Madhavan also teaches that the user can perform various activities while using the network-enabled television set 142 and/or the digital video recording device 144, such as, for example, watching a television program broadcast via the Internet on the television set 142, or watching a program previously recorded on the digital video recording device 144. Ex. 1162, 1:55-60, 5:18-36, 7:7-14, 9:9-18. I note that the '260 Patent specifically defines a "[s]et-top box" (STB) as "a device that connects a television and a signal source" and, further, that this signal source can be a "wireless network connection" or any "suitable signal source." Ex. 1101, 1:29-53. The '260 Patent also states that the set-top box "might be implemented, for example, as a circuit board, integrated circuit, set of integrated circuits, or software that is physically integrated with another 'box,' such as the television." *Id*. Accordingly, the media device 140 of Madhavan includes a "**set-top box**" because the media device 140 enables the user to view a television broadcast on the television set 142 via the Internet. Ex. 1162, 1:55-60, 5:18-36, 7:7-14, 9:9-18.

172. In Madhavan, each user device (e.g., client machine 130 and/or media device 140) provides respective identification information to Madhavan's servers (e.g., to processing servers 104 via web servers 102). Ex. 1162, 2:62-3:51, 5:53-6:12, 7:14-55, 8:9-25, 8:42-9:3, 10:3-25, 10:65-11:11, 12:49-62, Figs. 2, 5-7. This device identification information may include, for example, a device identifier such as a unique IP address (which may be a common IP address, as taught in Park and as I explain below), that is specifically assigned to the device. Ex. 1162, 5:53-66, 7:15-26, 8:60-67. Accordingly, Madhavan teaches that client machine 130 ("**an online user interface device**") is assigned an IP address ("**online access IP address of the user**"). Ex. 1162, Abstract, 4:37-45, 5:3-11, 7:33-36, 7:60-67, 8:42-48, 10:35-40, 10:67-11:6. Likewise, Madhavan teaches that media device 140, which includes a network-enabled TV set ("**a set-top box**") is assigned an IP address ("**set-top box IP address of that user**"). Ex. 1162, 4:37-56, 5:28-36; *see* also Ex. 1101, 1:29-53.

173. The processing servers 104 of content server 100, receive, via web servers 102, the device identification information along with event/action data collected from a user's device (e.g., client machine 130 and/or media device 140) and stores this information within data storage module 106 of the content server 100, which may be a database that implements and supports the content server 100. Ex. 1162, 3:1-8, 5:37-6:12, 7:33-36, 8:9-25, 8:42-48, 10:3-25, 10:35-40, 10:67-11:6, 11:30-37, Figs. 2, 5-9. This database (e.g., database 200) of the content server 100

"may be implemented as a relational database, and may include a number of tables having entries, or records, that are linked by indices and keys." Ex. 1162, 5:37-47, Fig. 3.

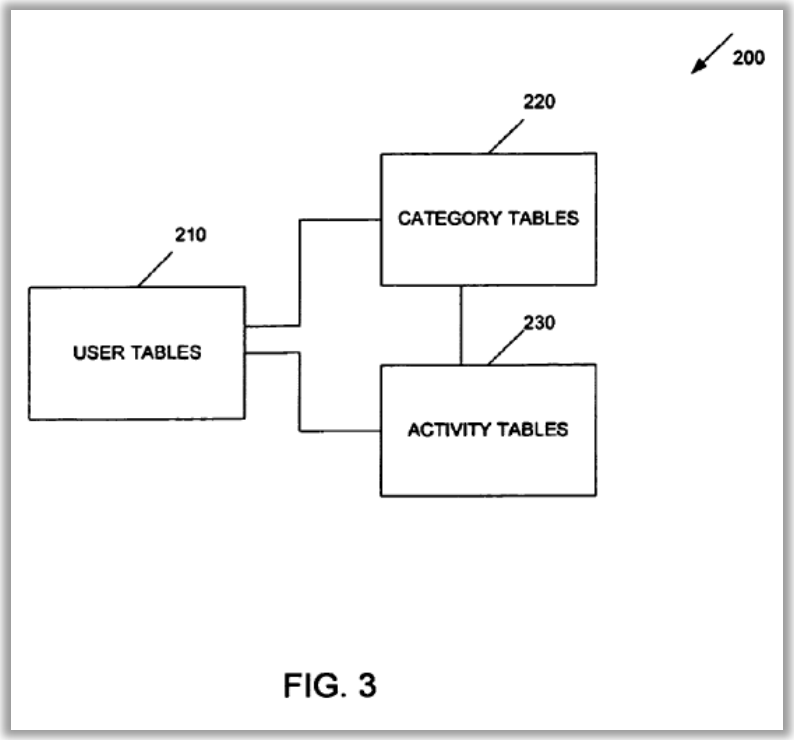

Ex. 1162, Fig. 3

174. As shown above in Figure 3, Madhavan's database 200 includes, for example, user tables 210, category tables 220, and event or activity tables 230, and Madhavan teaches that database 200 may include "any of a number of additional tables, which may also be shown to be linked to the user tables 210, the category tables 220, and the user event/activity tables 230." Ex. 1162, 5:48-52, 6:13-19. Madhavan teaches that "the event or activity tables 230 may contain, for example,

records of events or other actions performed by the user 110 while accessing the network 120….” Ex. 1162, 6:3-8. Madhavan’s database 200 also includes user tables 210 that contain a user profile for each user of the content server 100 that “may be linked to multiple items stored in the other tables 220 and 230 within the database 200,” such as, for example, device identification information. Ex. 1162, 5:53-66.

175. As I discuss above, when users connect to web servers 102 of the content server 100 using respective user devices (e.g., client machine 130 and/or media device 140), device identification information (e.g., IP address) for each user device is sent to processing servers 104 via web servers 102, along with event/action data that is collected from the users’ devices and associated with the device identification information for each device. Ex. 1162, 7:15-55, 7:60-8:15, 8:37-67, Fig. 2. This event/action data may include, for example, the actions or events of the users performed via their respective user devices. *See* e.g., Ex. 1162, 7:15-55, 7:60-8:15, 8:37-67. The collected event/action data, stored within activity tables 230 of database 200, is used to create user profiles, which are stored in activity tables 210 of database 200, that consolidate various information (e.g., geographic, identification, behavioral data) from the multiple devices associated with each user. Ex. 1162, 5:48-6:12, 7:14-26, 7:33-42, 8:44-48, 9:18-25. Madhavan also teaches that this event/action data is stored (e.g., contained) within the user profiles. *See* Ex.

1162, 5:48-5:66. Accordingly, in view of the above discussion, the processing servers 104 of content server 100 of Madhavan "**electronically associat[es] an online access IP address of the user and a set-top box IP address of that user**" because each user device (e.g., client machine 130, media device 140) provides respective device identification information to Madhavan's processing servers 104 (via web servers 102), which uses it to associate, via a user profile, various information (e.g., user action or event activity, geographic data, identification information, etc.) collected from multiple devices associated with a user of the content server 100. Further, in view of the above discussion, the user profile of a user of the content server 100 thus contains the respective device identification information (e.g., a device identifier such as an IP address) and user event/activity data obtained from each of the devices (e.g., client machine 130, media devices 140) associated with the user based on the device identification information provided by the respective devices. Ex. 1162, 3:1-8, 5:53-6:12, 7:33-36, 8:9-25, 10:3-25, Figs. 5-10.

176. As I explain above, processing servers 104 of content server 100 uses device identification information obtained from user devices (e.g., client machine 130, media devices 140) to associate each user device with a particular user profile, and thus a particular user. *Id*. In other words, processing servers 104 of content server 100 associates the device identification information obtained from the user's client

machine 130 (which includes a device identifier such as an IP address) ("**online access IP address of the user**") with the device identification information obtained from the user's media device 140 (which includes a device identifier such as an IP address) ("**set-top box IP address of that user**"). This association between client machine 130 and media devices 140, via their respective device identification information, allows processing servers 104 of the content server 100 to identify and retrieve a user profile along with previously-stored event/action data that is obtained from a first user device (e.g., client machine 130) based on the device identification information of a second (associated) user device (e.g., media device 140). The ability to identify and retrieve a user's profile and associated event/action data from database 200 using device identification information allows processing servers 104 of the content server 100 to add event/action data from the second device (e.g., media device 140) to the database 200 and to associate that data with the user's profile, such that the previously-stored event/action data obtained from the first device (e.g., client machine 130) can be used to direct advertisements to the second device (e.g., media device 140). *Id.*; *see also id.*, 7:43-8:8, 8:26-9:67.

177. Consider, for example, that a user (e.g., user 110) initially accesses web servers 102 of the content server 100 through network 120 using a client machine 130 ("**an online user interface device**"), which is assigned specific device identifier information, e.g., a unique IP address ("**online access IP address**"). Ex. 1162,

Abstract, 4:37-45, 5:3-11, 7:33-36, 7:60-67, 8:42-48, 10:35-40, 10:67-11:6, Fig. 2. As I explain above, after the user connects to the content server 100 using client machine 130 and via web servers 102, the processing servers 104 of content service provider 100 receives, via web servers 102, identification information such as the unique IP address assigned to the client machine 130 as well as corresponding action/event data (e.g., data associated with each respective event or action performed by the user while accessing the Internet using client machine 130). Ex. 1162, 3:1-8, 5:37-6:12, 7:15-55, 7:60-8:25, 8:37-67, 10:3-25, 10:35-46, 10:65-11:40, Figs. 2, 5-10. This event/action data along with classification categories associated with the user's online activity are further "stored into respective category tables 220 and activity tables 230 within the data storage module 106 [e.g., database 200] and are linked to the user profile of the user 110 stored within the user tables 210" by the processing servers 104 and based on the device's identification information. Ex. 1162, 8:63-67, 7:33-36, 7:48-53, 8:9-15, 9:36-40, 10:15-25, 10:41-46.

178. Subsequently, the user may access the web servers 102 of content server 100 for one or more online sessions using a different user device, e.g., media device 140 ("**a set-top box**"), which is also assigned an IP address ("**set-top box IP address of that user**"). *See* e.g., Ex. 1162, 1:46-54, 3:55-63, 4:37-56, 5:28-6:8, 7:2-38, 9:9-35, 10:1-20, 11:27-61, Abstract, Figs. 2, 5-7, 10. For example, referring to

Figure 7, when the user accesses the content server 100 using media device 140 ("**set-top box**"), data indicating the events or actions of the user that are performed via media device 140 during the one or more online sessions is sent to the processing servers 104 of content service provider via web servers 102, along with the device identification information of the media device 140 (e.g., the set-top box IP address). *Id*. This device identification information and the corresponding event/action data will be stored by the processing servers 104 of content service provide 100 to database 200 and linked by the processing servers 104 of content service provide 100 to the user's profile based on the identification information of media device 140. *See* e.g., Ex. 1162, 1:36-2:3, 3:52-4:13, 5:37-6:12, 7:7-53, 7:60-8:15, 8:42-56, 9:9-40, 10:1-25, Figs. 2, 5-7. By storing the device identification information for devices 130 and 140 to a common user profile (i.e., the profile associated with the user), the processing servers 104 of content server 100 links the respective device identification information (and corresponding user devices) as well as associated event/action data for a particular user that is collected from the user's device(s). Ex. 1162, 5:48-66, 7:33-35, 8:57-67, 10:3-9, 10:21-25, 11:18-22, Fig. 3. In my opinion, a POSA would understand that the device identification information (IP address) for a user's devices, such as client machine 130 and media device 140, would be associated with the user's profile as well as each other. *Id*. Thus, Madhavan's processing servers 104 of content server 100 associates "**an online access IP**

address" (the IP address of Madhavan's client machine 130) and "**a set-top box IP address**" (the IP address of Madhavan's media device 140) to a user 110 and, indeed, each other, by storing both IP addresses in the user's profile (e.g., user tables 210 of database 200). Ex. 1162, 1:36-2:3, 3:52-4:13, 5:37-6:12, 7:7-53, 7:60-8:15, 8:42-56, 9:9-40, 10:1-25, Figs. 5-7.

Combining Madhavan's system with Park's IP sharing router:

179. As described above, Madhavan uses the IP addresses of a user's devices as identification information, which Madhavan's processing servers 104 may use to associate different devices to a particular user profile. While some of the user's devices appear to have the same Internet access point—for example, the network-enabled television set 142 and the digital video recording device 144 connecting to network 120 via the network interface module 146—not all user devices necessarily connect to the network using a same access point. For instance, referring to Figures 1 and 2 of Madhavan, client machine 130 appears to connect to network 120 using a different access point than media device 140 and, as such, would likely be assigned and use a different IP address for communicating with external devices or systems via network 120 (e.g., the Internet). *See* Ex. 1162, 4:37-43, 5:3-11, 5:28-36, 7:15-26, 7:60-67, Figs. 1-2.

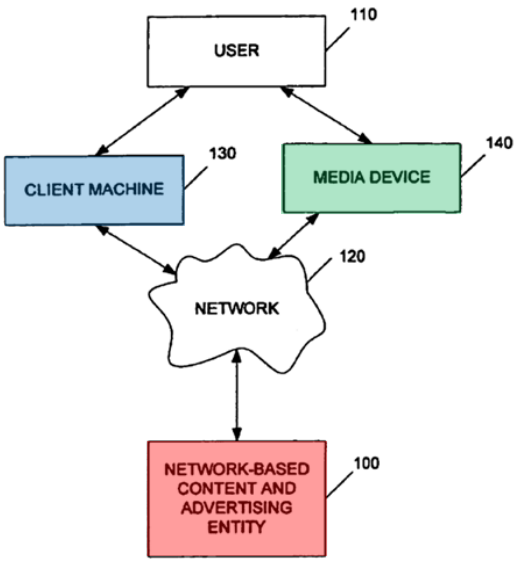

Ex. 1162, Fig. 1 (annotated)

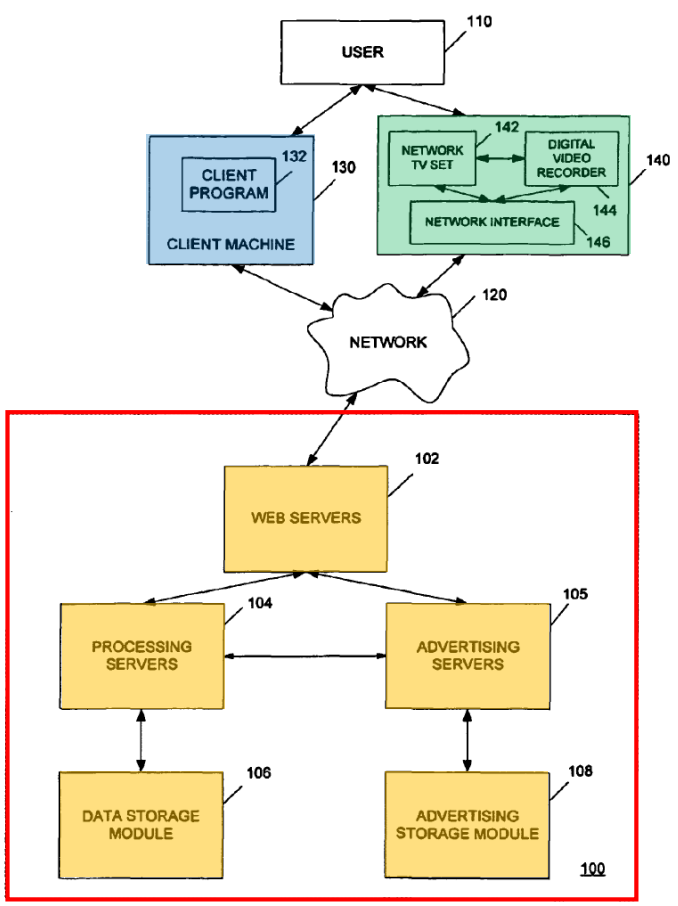

Ex. 1162, Fig. 2 (annotated)

180. However, as I discuss above (*see* ¶ [0159] of my Declaration above), Park teaches using an "IP sharing router" to connect multiple user devices to the Internet using a common IP address. Ex. 1163, ¶ [0003], Abstract. As I show below in Park's Figures 1 and 2, Park discloses a home network that includes an IP sharing router 110 (**red**) and a plurality of user devices that are connected to the router—e.g., computer 120 (**blue**), television 134 (**green**), and devices 232-236 (**orange**). Ex. 1163, ¶¶ [0007]-[0008], [0029]-[0030].

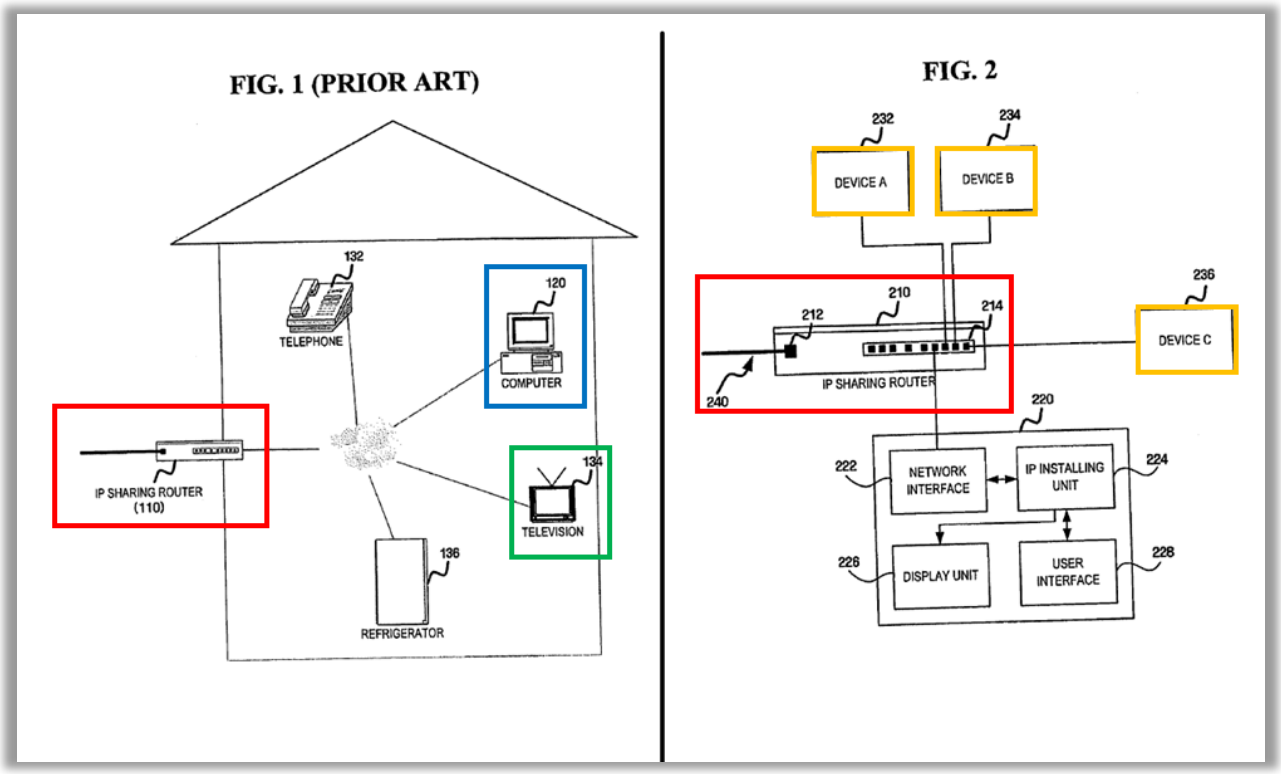

Ex. 1163, Fig. 1 (annotated) Ex. 1163, Fig. 2 (annotated)

181. In Park, an Internet Service Provider (ISP) assigns a public IP address to the IP sharing router 110, and the IP sharing router 110 assigns a private IP address to each of the devices constituting the home network (e.g., Devices A-C as shown in Figure 2 of Park). Ex. 1163, ¶ [0009]. Because a private IP address cannot be used on the Internet and is only available on the internal network, each of Park's user devices access the Internet with a public IP address assigned to the IP sharing router ("**common IP address**"). Ex. 1163, ¶¶ [0009]-[0011]. Further, recognizing that the number of network products, such as user devices, continues to increase, resulting in a decrease in the number of public IP addresses that are available, Park teaches that "[t]he use of a private IP address is helpful in obviating the shortage of

public IP addresses." Ex. 1163, ¶ [0010]. Thus, as explained above, each of the devices within Park's local network share a common IP address—i.e., the IP address of IP sharing router 110—to connect to the Internet. Ex. 1163, ¶¶ [0009]-[0011]. Park describes another example of an IP sharing router (e.g., router 210) that includes an IP installer 220 to facilitate the assignment of private IP addresses to user devices. Ex. 1163, ¶¶ [0012], [0014]-[0016], Fig. 2. As shown above in Figure 2, Park's IP installer 220 connects directly to the IP sharing router 210. Ex. 1163, ¶¶ [0029]-[0030].

182. As I explain above in § VIII.C, network address translation (NAT) is a well-known method of mapping multiple IP addresses (e.g., private addresses) inside a network to a common public IP address at least as of May 1994. *See* Ex. 1112, pp. 36-38; Ex. 1113, ¶¶ [0004]-[0009]. Park's IP sharing router (e.g., router 110/210) includes these well-known NAT functions in which the router 110/210 is assigned a public IP address by an Internet Service Provider (ISP), and the router assigns private IP addresses to devices that are connected to the router. Ex. 1163, ¶¶ [0030], [0035]-[0036], [0038]. In the example shown in Figure 2, Park's IP installer 220—coupled to router 210—assigns private IP addresses to each device constituting the local network. Ex. 1163, ¶ [0038]. Like the example network in Park's Figure 1, user devices within the home or local network cannot use their assigned private IP address

to transmit data to an external device, and instead use the common public IP address assigned to the router 210. *Id*.

183. Park further explains that the IP sharing router (e.g., router 210) adds port numbers to the shared public address so that an external device—using port numbers associated with each of the devices—may distinguish between, and send data to, the various devices sharing the public IP address of the router 210. Ex. 1163, ¶ [0038]. More specifically, Park's router translates the private IP address of the local device to the router's public IP address and adds the device's internal port number—thus enabling an external device to distinguish between, and send data to, the various local devices sharing the public IP address of Park's router. Ex. 1163, ¶ [0038]. For example, Park's router may be assigned a public IP address of 221.100.10.1 and assign a private IP address 198.126.10.3 for Device A 232 at port 7070 and private IP address 198.126.10.4 for Device B 232 at port 8080[3]. Ex. 1163, ¶ [0038]. If Device A would like to transmit data through the internet, it cannot use its private IP address; rather, Park's router translates the source of the data from 198.126.10.3 to 221.100.10.1 and adds port 7070. *Id*.

[3] Paragraph [0038] of Park states, in part: "For example, when the port number of the IP installer 220 is 6060, the port number of device A 232 is 7070, **the port number of device B 234 is 7070**, and the port number of device C 236 is 9090…." (Emphasis added). It is clear from Park's example that reference to port "7070" for Device B is a typo.

184. In my opinion, a POSA would have found it obvious to add an IP sharing router with port and address translation functionality, as taught by Park, to Madhavan's system. As shown below, for example, Madhavan's Figure 1 has been edited to include Park's router 210 and IP installer 220, whereby various user devices (e.g., client machine 130, media device 140 and Device C) are each connected to the IP sharing router to access network 120. In my opinion, the proposed combination would have been well within the skill of a POSA because it would have merely involved connecting Madhavan's client machine 130 (**blue**) ("**online user interface device**"), which can be a computer or mobile device running a web browser to access the internet, and Madhavan's media device 140 (**green**), which can be a network enabled TV set ("**set-top box**"), to an IP sharing router such as Park's IP sharing router 210 (**red**), which is equipped to handle such devices. *See* Ex. 1162, 1:46-54, 3:55-63, 4:37-42, 5:3-11, 7:15-19, 9:18-22; Ex. 1163, ¶¶ [0008], [0011]-[0012].

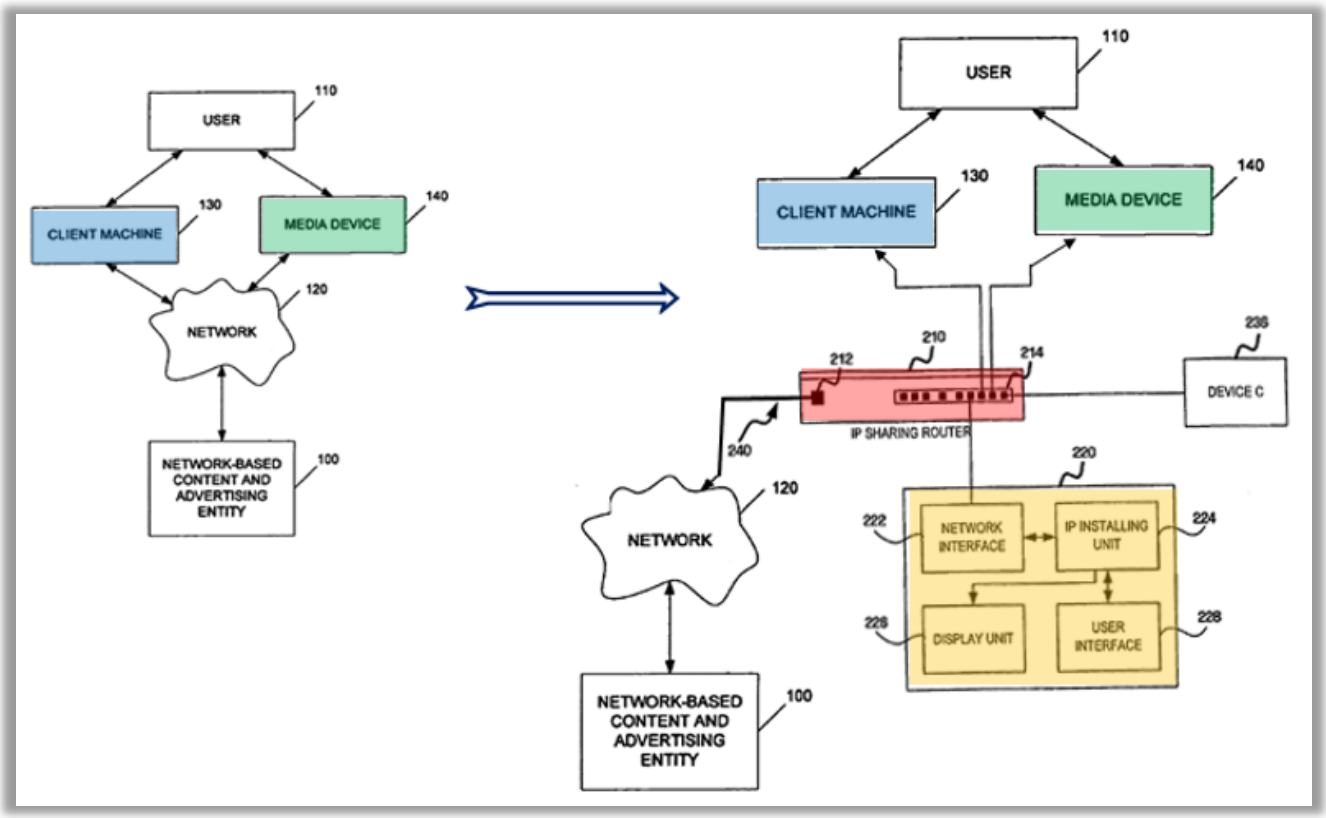

Ex. 1162, Fig. 1 (annotated)

Ex. 1162, Fig. 1 (annotated and edited to include Park's router 210 and installer 220)

185. In the proposed Madhavan-Park combination, one or more processing elements of the content server 100 ("**computer system**"), such as processing servers 104, would have identified associations among the identification information of multiple electronic devices, including client machine 130 and media device 140, based on their use of the "**common IP address**," which is the IP address of the shared router (e.g., Park's router 110/210) used to connect client machine 130 and media device 140 to the Internet. In particular, as I explain above (*see* ¶¶ [0175]-[0176], of my Declaration), Madhavan's system identifies associations among

multiple electronic devices because each user device (e.g., client machine 130, media device 140) provides respective identification information to Madhavan's processing servers 104 via web servers 102, which uses it to associate, via a user profile, various information collected from the multiple devices (e.g., client machine 130 and media device 140). Ex. 1162, 5:48-6:12, 7:14-26, 7:33-42, 8:44-48, 9:18-25, Fig. 2. As I will explain in more detail further below, in the proposed Madhavan-Park combination, the identification information—provided by the user's devices and used by the processing servers 104 of content server 100 to link the collected user event/action data with a particular user profile—includes the common IP address of the shared IP router used by the devices to connect to the Internet.

186. As I previously explained above in § VIII.C, as part of well-known network address translation and port translation functions, the IP address sent from each device sharing a router to communicate over the Internet is the same, while the port number is different for each device connected to a different port. *See* e.g., my comments above in ¶ [0182] of my Declaration. In the proposed combination, devices within the user's local network share a common IP address (e.g., the IP address of Park's shared router) and are also associated with a respective port number for communicating via the Internet with external devices, such as Madhavan's content server 100. As was well-known to a POSA at the time the '260 Patent was filed, data packets sent over the Internet include an IP address of the

source and destination devices. *See* e.g., Ex. 1113, ¶¶ [0002]-[0010], Abstract, Figs. 1-2. Thus, under the proposed combination, the identification information of a user's device is a combination of: **(i)** an IP address of a router used to connect to the Internet (e.g., the public IP address of Madhavan-Park's shared IP router), which is assigned to a user's device, and **(ii)** a port number associated with the user device.

187. As I explain above, this identification information is used to associate two or more devices of a multitude of user devices with the same user profile. The processing servers 104 of content server 100 receives, via web servers 102, the identification information of each device connecting to the content service provider, which includes the public IP address of Madhavan-Park's shared router (or any other router used by the device to connect to the Internet) and the port number associated with the device. Ex. 1162, 7:63-67, 8:42-48, 10:6-9, Fig. 2. The IP address of the shared router to which a user's device is connected and the port number associated with that device, together, uniquely identify a particular user device that connects with Madhavan's content server 100 via network 120.

188. The processing servers 104 of content server 100 of Madhavan-Park would have associated the identification information of client machine 130 and media device 140 based on their common use of the IP address of Park's router. *See* Ex. 1101, 13:19-23, 13:41-43 ("The existence of the common IP address associates the online access IP address and the set-top box IP address."). More specifically, as

I discuss above, processing servers 104 of the content server 100 receives the identification information from each of the user's devices via web servers 102 and stores the identification information provided by respective user devices to a common user profile in database 200. Ex. 1162, Fig. 2. By storing the identification information to a common user profile (i.e., the profile associated with the user), processing servers 104 of the content server 100 links the respective identification information (and corresponding user device) as well as associated event/action data for a particular user that is collected from the user's device. Ex. 1162, 5:48-66, 7:33-35, 8:57-67, 10:3-9, 10:21-25, 11:18-22, Fig. 3.

189. The processing servers 104 of Madhavan-Park's content server 100 ("**computer system**") would thus have associated the identification information of the client machine 130 and media device 140 based on their use of the "common IP address." This comports with the written description of the '260 Patent, which states that "where the user's STB 36 can also obtain online access via the same IP address as the user's online access [device] (i.e., via modem 32), that common IP address comprises the electronic association…." Ex. 1101, 12:54-58, 13:41-43 ("The existence of the common IP address associates the online access IP address and the set-top box IP address.").

190. Thus, in the Madhavan-Park system, processing servers 104 of the content server 100 ("**computer system**") would "**electronically associat[e]**" the

identification information (which includes its IP address) of client machine 130 ("**online access IP address of the user**") with the identification information (which includes its IP address) of its media device 140 ("**set-top box IP address of that user**") based on their use of the "**common IP address**" of Park's shared IP router. As I explain above, processing servers 104 of content server 100 of Madhavan's modified system would store, in the user's profile (e.g., user table 210 of database 200), this common IP address along with a respective port number as the identification information for each of client machine 130 and media device 140 (which as discussed above, includes a set-top box). *See* Ex. 1162, 7:33-36, 7:60-67, 8:42-48, 9:18-29, 10:3-9, 10:67-11:6, 11:32-37. By linking or associating the identification information, received from client machine 130 and media device 140, to a particular user profile based on the respective identification information of client machine 130 and media device 140, the user profile associates—via respective identification information—the client machine 130 and media device 140 as belonging to a same user ("**electronically associating an online access IP address of the user and a set-top box IP address of that user based on a common IP address**"). *Id*. Further, network traffic to and from the client machine 130 and media device 140 would be routed using the common IP address of the IP sharing router (e.g., Park's IP sharing router 210). Ex. 1163, ¶¶ [0030], [0035]-[0036], [0038]. Specifically, as disclosed by Park, an ISP would assign a public IP ("common IP

address") to the IP sharing router, and the IP sharing router would assign a private IP address to Madhavan's client machine 130 and Madhavan's media device 140. *Id.* When Madhavan's client machine 130 accesses the content server 100, an IP router (as taught by Park) translates the private IP address of client machine 130 with the common IP address ("**online access IP address of the user**") and add the port number of client machine 130. *Id.* Similarly, when Madhavan's media device 140 accesses the content server 100, the IP router translates the private IP address of the media device 140 ("**set-top box IP address of that user**") to the common IP address and adds the port number of the media device 140. *Id.* Thus, in the combined Madhavan-Park system, network traffic to and from the client machine 130 and media device 140 would be routed through the IP sharing router using the common IP address by Madhavan-Park's system ("**wherein network traffic is routed via the common IP address to both an online user interface device and a set-top box of that user**"). *Id.; see also* Ex. 1101, 12:54-58, 14:41-44.

191. In my opinion, a POSA would have been motivated to combine an IP sharing router with Madhavan's system, such as Park's IP sharing router, because this was a well-known technique to reduce the number of public IP addresses used by a system such as Madhavan's. Ex. 1163, ¶¶ [0010]-[0011], [0035]-[0038]. A POSA would have recognized that this structure would allow for the efficient routing of data between devices, even as the number of devices connecting a network, such

as the Internet, grows. *Id*. Further, it is my opinion that a POSA would also have recognized that by adding an IP sharing router to Madhavan's system, rather than assigning a public address to each of Madhavan's user devices, only a single public IP address would need to be assigned (e.g., to the IP sharing router) to a local network to enable user devices therein to communicate with external or remote systems via network 120, such as communicating with content server 100. Using a common IP address, (e.g., the IP address of an IP sharing router with NAT), rather than assigning multiple IP addresses, would result in simplified network management thus making it easier to manage and troubleshoot issues that may arise on the network, and also would offer some natural degree of firewall capability. Further, using an IP sharing router and adding the port number to uniquely identify each device as taught by Park would help limit the concern for the growing need of additional public IP addresses (as IP address depletion was a concern due to the growing number of devices on the internet and limited 32-bit IPv4 addressing capability), and would also result in cost savings. *See* Ex. 1163, ¶¶ [0006], [0010].

192. It is my opinion that adding an IP sharing router with NAT and adding the port number to uniquely identify each device, as taught by Park, to Madhavan's system would have been nothing more than the simple combination of prior art elements according to known methods to yield predictable results. *See* § IV, *supra* (exemplary obvious rationale (A) above. The prior art elements include Madhavan's

communication and advertisement targeting system, and an IP sharing router having NAT and adding port numbers functionality as taught by Park. Ex. 1162, 1:8-12, 1:44-2:3, 3:52-4:13, 4:37-42, 5:3-17, 5:28-32, 7:15-9:67, 10:6-25, 10:33-64, 11:30-61, Figs. 1-2, 5-9; Ex. 1163, ¶¶ [0010]-[0011], [0030]-[0038], Figs. 1-2. The known methods include connecting or otherwise coupling a router, like Park's IP sharing router, to a network—e.g., the Internet—and to one or more user device constituting the user's local network, such as Madhavan's user devices (e.g., client machine 130, media device 140). *Id*. The predictable results include a communications system that uses an IP sharing router to enable one or more user devices within a local network to communicate with external devices via a common IP address using NAT and adding port numbers. *Id*.

193. Further, a POSA would have had the knowledge and skills to implement the combination with a reasonable expectation of success. As I explain above (*see* ¶ [0184] of my Declaration), the proposed combination would have been well within the skill of a POSA because it would have merely involved connecting multiple user devices (e.g., client machine 130, media device 140) to an IP sharing router, such as Park's IP sharing router 210, which is equipped to handle such devices. Ex. 1162, 1:46-54, 2:55-61, 3:55-63, 4:37-42, 5:3-11, 7:15-19, 9:18-22, 12:63-13:3; Ex. 1163, ¶¶ [0008], [0011]-[0012], [0027]. For instance, Park's sharing router 110/210 is already configured to assign IP addresses to multiple devices (e.g.,

a computer 120, a telephone 132, a television 134, etc.) and to couple these devices to a network (e.g., the Internet). Ex. 1163, ¶¶ [0008]-[0012], [0030]-[0031], [0038]. Further, as I explain above in § VIII.B, the use of NAT and adding port numbers provided by an IP sharing router were well-known at the time of filing the '260 Patent. *See* e.g., Ex. 1112, pp. 33-38; Ex. 1113, ¶¶ [0004]-[0009]. Thus, in my opinion, a POSA would have been familiar with the proposed implementation of a router like that of Park within Madhavan's system.

194. Additionally, the proposed combination would have been well within the skill of a POSA at least because IP sharing routers, like Park's, are equipped to handle and route communications between Madhavan's user devices and other devices/systems over the Internet using a common, public IP address. Ex. 1162, 1:46-54, 3:55-63, 4:37-42, 5:3-11, 7:15-19, 9:18-22; Ex. 1163, ¶¶ [0008], [0011]-[0012], [0027]. As I explain above, an ISP would assign a public IP ("common IP address") to the IP sharing router, and the IP sharing router would assign a private IP address to Madhavan's user devices. Ex. 1163, ¶¶ [0008], [0011]-[0012], [0027]. When Madhavan's user devices accesses the content server 100, an IP router (as taught by Park) translates the private IP address of the user device with the common IP address and add the port number of the user device. *Id.* Thus, in the combined Madhavan-Park system, network traffic to and from the client machine 130 and media device 140 would be routed using the common IP address of the IP sharing

router, e.g., Park's IP sharing router 210 *Id*. Moreover, in my opinion, a POSA given his level of knowledge, including experience with network communication systems, would have found connecting multiple devices to an IP sharing router, such as Park's, to be straightforward. Finally, a POSA would have also understood that the use of Park's router and a common IP address would not interfere with Madhavan's operations, including the operations disclosed in Figures 5-10. For instance, coupling Madhavan's user devices (e.g., media device 140 and client machine 130) to Park's router such that the devices may access content server 100 via the Internet would not impact the operation of Madhavan's system at least because Madhavan already contemplates that each user device may access content server 100 via the Internet using separate IP addresses.

195. The proposed Madhavan-Park combination thus discloses and renders obvious Element [1A].

Modifying Madhavan-Park with Kato's MAC addresses:

196. To the extent that it is argued that Madhavan-Park does not teach "electronically associating an online access IP address of the user and a set-top box IP address of that user based on a common IP address," this is taught in Madhavan-Park-Kato, as discussed in further detail below. It is my opinion that a POSA would have found it obvious to incorporate Kato's teachings of using a common IP address to associate multiple devices based on various device identifiers (e.g., IP addresses,

port numbers, and MAC addresses) within the Madhavan-Park system for the reasons explained below.

197. Kato generally relates to methods for identifying a user terminal which communicated through networks having different address systems, for example, to identify a user terminal of a plurality of user terminals that may communicate on the Internet using a common IP address. Ex. 1164, ¶¶ [0002], [0004]-[0005], Abstract. More specifically, Kato recognized that content providers, such as Madhavan's content server 100, use IP addresses to identify which device sent information over a network based on an IP address associated with the sending device. Ex. 1164, ¶ [0004]. Kato also recognized that this effort becomes more difficult when multiple devices may use a common IP address:

> [I]n the case where Internet access services-are provided to each apartment of an apartment house such as "Internet apartment house," a plurality of users communicate on the Internet by use of the same IP address. **In such a case, it is difficult to identify a particular user based on a source IP address and therefore the provider cannot respond quickly to the sender information disclosure request**.

Ex. 1164, ¶¶ [0005] (emphasis added).

198. To address this problem, Kato teaches using a common IP address to associate multiple devices based on various device identifiers, such as IP addresses, port numbers, and MAC addresses. Ex. 1164, ¶¶ [0006], [0009]-[0011], [0031]-[0036], [0038]-[0046], [0049]-[0057], [0063]-[0070].

199. As I show below in Figure 1 from Kato, Kato describes an identification system 10 that includes: intelligent hubs (16*a*-16*d*), each of which is placed in a Local Area Network (LAN) 12*a* or 12*b* (**green**) and provided with a plurality of physical ports to which a plurality of user terminals 14*a*-14*l* (**orange**) that are respectively connected to routers 20*a* and 20*b* (**red**) that are used to connect the LANs 12*a* and 12*b* to the Internet 18; and an identification device 22 (**blue**) for identifying a user terminal—via the terminal's MAC address—that communicated on the Internet 18. Ex. 1164, ¶¶ [0030]-[0031], Fig. 1.

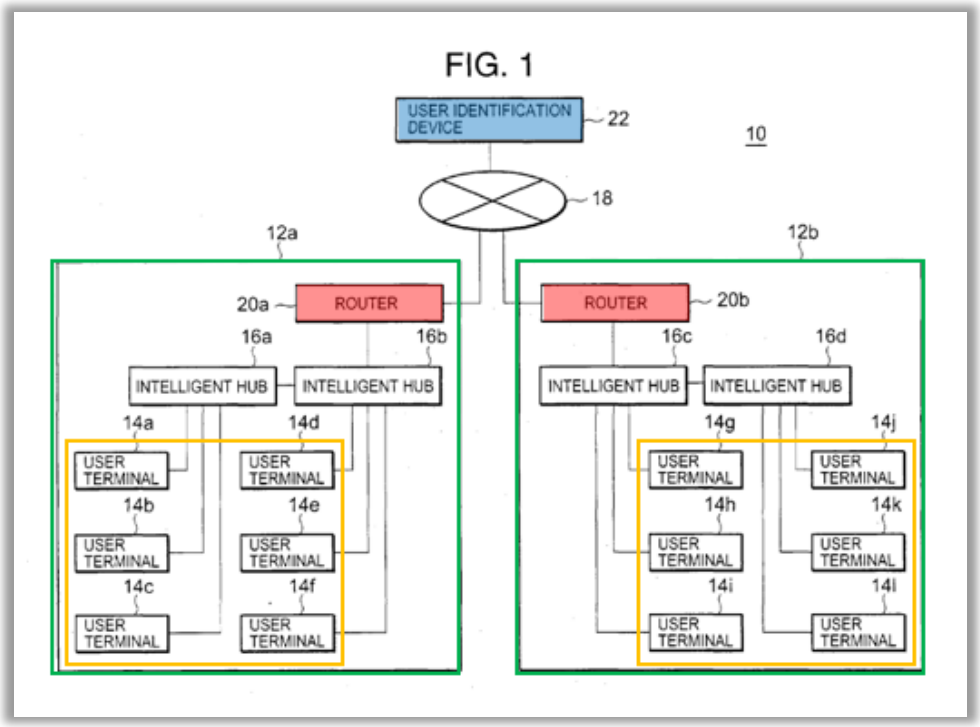

Ex. 1164, Fig. 1 (annotated).

200. Noting that multiple devices may use a common IP address (*see* Ex. 1164, ¶ [0005]), Kato's system collects and maintains information (e.g., "first communication information") indicating a correspondence between the physical ports of intelligent hub 16 and terminal identification information identifying a user terminal (e.g., user terminals 14*a*-14*l*) connected to the port. Ex. 1164, ¶¶ [0008], [0013], [0016]-[0020], [0031], [0040]-[0041], [0049], [0066]. Kato describes that this information is collected and maintained by the intelligent hub (e.g., hubs 16*a*-16*d*). *Id.* Kato describes that the "terminal identification information" is a MAC address associated with a particular user terminal. Ex. 1164, ¶¶ [0009]-[0011], [0031], [0033]-[0034], [0050]-[0051], [0066], Abstract. Additionally, Kato's system

collects and maintains information (e.g., "second communication information") indicating a relationship between a MAC address and a private IP address assigned thereto." Ex. 1164, ¶¶ [0008], [0010]-[0011], [0013], [0017]-[0020], [0033]-[0034], [0040], [0050], [0067]. More specifically, Kato describes that each of router (e.g., router 20*a*, 20*b*) stores information indicating a relationship between the terminal identification information (MAC address) of each user terminals and each private IP address assigned to each terminal identification information, and each router sends to the identification device 22 the "second communication information" indicating a correspondence between a MAC address and the private IP address assigned thereto. Ex. 1164, ¶ [0033]. Further, Kato's router includes "an address converter" that performs network address translation—to convert between private IP addresses and global/public IP address for data packets relayed between a LAN and the Internet—and stores "third communication information" indicating a relationship between the private IP address and the global IP address. Ex. 1164, ¶¶ [0008], [0013], [0017]-[0020], [0035]-[0038], [0068]-[0070]. More specifically, Kato describes that this "third communication information" is sent to the identification device 22 when the router has released a global IP address and, if the router has IP masquerade function, the router may store a private IP address assigned to each user terminal together with a global IP address and a port number assigned to the private IP address such that the third communication information indicates "a

correspondence of the private IP address, the global IP address and the port number being associated with one another." Ex. 1164, ¶ [0036]; *see also id.*, ¶¶ [0006], [0009]-[0011], [0031]-[0036], [0038]-[0046], [0049]-[0057], [0063]-[0070].

201. The stored first through third communication information is sent to Kato's user identification device 22, which uses this information to associate different user devices that communicate via the Internet using a global IP address. *See* e.g., Ex. 1164, ¶¶ [0031]-[0038], [0040]-[0041]. To identify a particular terminal device and thus the user of that device, Kato's identification device 22 "detects the physical port of an intelligent hub (16*a*-16*d*) to which a user terminal that has communicated on the Internet 18 is connected, based on the first communication information received from the intelligent hub (16*a*-16*d*) and the second and third communication information received from the router (20*a*, 20*b*)." Ex. 1164, ¶¶ [0038], [0049]-[0053], [0064], [0070], Fig. 4. Accordingly, as I explain above, Kato's system uses a MAC address to identify a particular user terminal, and also tracks the global IP address that was used by the terminal to access the Internet. Ex. 1164, ¶¶ [0017]-[0020], [0031]-[0038], [0040]-[0041], [0049]-[0053], [0070], Abstract.

202. As I discuss above, Kato teaches that its terminal devices (e.g., user terminals 14*a*-14*l*) each include terminal identification information (e.g., device identifier), which comprises a media access control (MAC) address. Ex. 1164, ¶¶

[0009]-[0011], [0031], [0033]-[0034], [0050]-[0051], [0066], Abstract. Although not explicit in Madhavan, given the similarity between Madhavan's user devices (e.g., client machine 130, media device 140) and Kato's user terminals, in my opinion, a POSA would have understood that Madhavan's devices, and thus the devices in the Madhavan-Park system, would have had equivalent device identifiers like those in Kato (e.g., MAC addresses). For example, Madhavan explains that its user devices can access the content server 100 via the Internet, wireless networks, and other known networks, either directly or via network interface. *See* e.g., Ex. 1162, 5:3-17, 5:28-36, 12:21-48, Figs. 1, 12; *see also* Ex. 1163, ¶¶ [0034], [0040], [0057], [0059]-[0060], [0064]. Further, as seen below, a POSA also would have understood that user devices using wireless networks and WiFi technology, such as Madhavan's user devices, would have included device identifiers, specifically MAC addresses:

> Each IEEE 802.11 PHY operates in a single medium—the WM. The IEEE 802.11 MAC operates in a single address space. MAC addresses are used on the WM in the IEEE 802.11 architecture. Therefore, it is unnecessary for the standard to explicitly specify that its addresses are "WM addresses." This is assumed throughout this standard.

Ex. 1153, 41 (annotated), 8 ("WM" being the abbreviation for "wireless medium").

203. I also note that the '260 Patent specifically identifies MAC addresses as one example of a device identifier. Ex. 1101, 14:65-15:2 ("Examples of such identifiers could include an equipment serial number or a portion thereof, a device

MAC address or a portion thereof, a username, a pseudonym, a confirmation number, a tag, or any other identifying code or data element."), 15:33-36 ("If a unique identifier is used (such as a complete MAC address or a complete device serial number) …"). The use of a MAC address as a device identifier was well known. *See* e.g., Ex. 1163, ¶ [0034]. For example, Park teaches that the MAC address can be used to identify a network interface (and thus a device). Ex. 1163, ¶ [0034]. Thus, the device identifiers (e.g., common IP addresses and MAC addresses) of the user devices in the Madhavan-Park system show, in part, the identification information used by processing servers 104 of content server 100 to distinguish the user's various devices.

204. As I explain further below, it is also my opinion that a POSA would have found it obvious to utilize the relationship between the public IP address, port number, and MAC address of a user's device (e.g., client machine 130, media device 140), as taught by Kato, to identify user devices and corresponding user profile information (e.g., user event/action data) in the Madhavan-Park system, including identifying a user's devices that may access the Internet using a common IP address (e.g., using Madhavan-Park's shared IP router).

205. The Madhavan-Park-Kato system distinguishes a user's various devices (e.g., client machine 130, media devices 140) using identification information provided by each user device when it connects to the content server 100.

See Ex. 1162, 7:33-36, 7:60-67, 8:42-48, 10:3-9, 10:33-40. In particular, processing servers 104 of the Madhavan-Park-Kato system identifies and/or distinguishes between a user's various devices based on a relationship between the device's MAC address and the global IP address ("**common IP address**") used by the device to access the content service provider via the Internet, for example, the IP address of the shared IP router. Ex. 1164, ¶¶ [0017]-[0020], [0033]-[0038], [0040]-[0047], [0049]-[0053], [0066]-[0070]. As an example, in addition to the Madhavan-Park system using the combination of the public IP address of the shared IP router and device port number as identification information for a user's device that is used to associate user data collected from the user device with the user's profile, the resulting Madhavan-Park-Kato system identifies the user's profile information based on the relationship between the device's MAC address and the common/global IP address used by that device to access the Internet. Alternatively, in addition to using the combination of the router's IP address and device port number as identification information, the Madhavan-Park-Kato system may also identify the user's profile based on the relationship between the device's MAC address and the common/global IP address, as taught by Kato.

206. In Madhavan-Park-Kato, a corresponding user profile is supplemented with updated identification information (such as IP address, port number, MAC address) and corresponding online activity data, each time a user device accesses the

content server 100. Ex. 1162, 3:1-8, 5:53-6:12, 7:33-36, 8:9-25, 10:3-25, Figs. 6, 8, 9, 10. Processing servers 104 stores, in the user profile, "geographic data detailing user access locations" (Ex. 1162, 5:59-66), and a POSA would understand that a user accesses the content service provider from various different geographic locations as he travels with his mobile device. It is my further opinion that a POSA would recognize that because the user accesses the content service provider 100—via the user's device—from various different geographic locations, the user may also access the content service provider via the Internet using different routers (or access points), which have been assigned different IP addresses. For example, to the extent that the shared IP router was assigned a new IP address, by using Kato's MAC address information (which would remain the same even if the IP address from which the user is accessing content service provider 100 changes) to access the content service provider, the content service provider would still receive a device identifier (the newly assigned IP address of the router used to connect to the Internet) from the user's device and use this device identifier to link the collected user data to the user's profile. Ex. 1163, ¶¶ [0031]-[0038], [0040]-[0041]

207. The data collected from a device from the different location will be added to the user's profile and used to target advertisements to the user, even when he is accessing the network from a different device using the common IP address again. Ex. 1162, 5:48-6:19, 7:43-53, 8:9-33, 8:57-9:67, 10:41-64, 11:38-61, Figs. 3,

5-10. Accordingly, before (and/or after) client machine 130 connects to content service provider via the shared IP router, the user may use client machine 130 (or media device 140) to connect to the content service provider 100 via a different router having a different IP address. In this instance, the IP address of client machine 130 ("**online access IP address**") would be different from that of the shared IP address (e.g., a previous IP address of the client device, such as when the client device was outside of the home). Processing servers 104 of the content service provider 100 may collect user data associated with the online activity of client machine 130 while accessing the Internet using the different router, and may store that user data to database 200 using Kato's MAC address information obtained from client machine 130, thus linking the stored data with the user's profile. Ex. 1162, 3:9-38, 5:53-59, 6:3-8, 8:1-8, 8:42-56, Fig. 6.

208. In my opinion, a POSA would have been motivated, for example, to incorporate Kato's teaching of associating multiple devices and their respective MAC addresses and/or port numbers based on a common IP address in the Madhavan-Park system to accurately identify a user's device, and corresponding user event/action data ("**user profile information**"), that shares a common IP address with other devices. *See* e.g., Ex. 1164, ¶¶ [0005]-[0006], [0030]-[0039], [0040]-[0047], [0066]-[0070]. A POSA would have recognized that, by identifying user devices via a MAC address as taught by Kato, the Madhavan-Park system

would have been able to quickly correlate user data collected from a user's device with a particular user profile by leveraging a determined relationship between a MAC address of the user device and a common/global IP address used by the device to access the content server 100 via the Internet. *Id.* A POSA would have recognized that the use of MAC address as a device identifier would provide additional flexibility for correlating a user's profile to user data obtained from a particular device. Because a MAC address is a unique hardware identification number that is assigned to a network interface card of a device, this identification number may be used to identify the device regardless of network and/or geographic location. A POSA would have also recognized that such a static identifier would be a valuable means of identifying a particular device beyond the use of a port number assigned to the device, which may change over time.

209. Further, by associating the MAC address of a user device with the user's profile, for example, by identifying user devices via a MAC address as taught by Kato, the resulting Madhavan-Park-Kato system would more readily correlate user event/action data collected from the user's device with the user's profile across different online sessions. *See* e.g., Ex. 1162, 3:1-8 (discussing user engaging in multiple online session), 7:15-19; Ex. 1164, ¶¶ [0005]-[0006], [0017]-[0020], [0030]-[0038], [0040]-[0047], [0049]-[0053], [0066]-[0070]. As I discuss above, a user may attempt to access the content server 100 from various different network

locations. Because a MAC address is used to identify and ensure the physical address of the user's device and thus does not change with time or the device's environment/location, in my opinion, a POSA would recognize that using a device's MAC address as a form of identification information would be beneficial. For example, using a MAC address as a device identifier, the content service provider would be able to identify and associate the user device with the user's profile even when the user attempts to access the entity from different network locations or using different IP addresses, or in the event that an IP address of the shared router is changed over time.

210. In my opinion, a POSA would have found that combining Madhavan-Park with Kato would have been merely applying a known technique to a known system ready for improvement. *See* § IV, *supra* (exemplary obvious rationale (D) above). The system to be improved is Madhavan-Park's system including the content server 100, which lacks the express ability to associate user devices and correlate user event/action data with a user profile based on a relationship between the devices' MAC addresses and the public IP address used by the devices to access the Internet, e.g., the IP address of the Madhavan-Park shared IP router. *See* e.g., Ex. 1162, 5:53-66, 7:15-19, 7:33-36, 7:63-67. As I discuss above, Kato teaches the known technique of associating user devices based on a determined relationship between the public IP addresses, port numbers, MAC addresses, and private IP

addresses. *See* e.g., Ex. 1164, ¶¶ [0005]-[0006], [0017]-[0020], [0033]-[0038], [0040]-[0047], [0049]-[0053], [0066]-[0070]. As I also explain above, because the MAC address of a device does not change with time, a POSA would have recognized the benefits of using this information as a device identifier in the Madhavan-Park system, particularly given Madhavan's teaching that the user may attempt to access the content server 100 from various different network access locations. *See* e.g., Ex. 1162, 1:36-2:3, 3:1-8, 3:52-4:13, 5:59-66, 7:60-8:5, 9:9-15.

211. It is my further opinion that a POSA also would have found that adapting the Madhavan-Park system to use a MAC address as a means for identifying user devices based on a determined relationship between the devices' public IP addresses, port numbers, MAC addresses, and private IP addresses used by the devices to access the Internet, as taught by Kato, would merely using known techniques to improve a similar method in the same way. *See* § IV, *supra* (exemplary obvious rationale (C) above). The known techniques include Kato's technique of associating user devices based on a determined relationship between a public IP address, port numbers, the MAC addresses, and private IP addresses used by the devices to access the Internet. *See* e.g., Ex. 1164, ¶¶ [0017]-[0020], [0033]-[0038], [0040]-[0047], [0049]-[0053], [0066]-[0070]. The similar method includes the Madhavan-Park system's method of using identification information collected from a user device to associate online activity (e.g., user event/action data) with a

particular user profile and, further, to retrieve user event/action data associated with any of the user's devices previously used to access the content service provider. *See* Ex. 1162, 5:53-66, 7:33-36, 7:48-53, 8:9-15, 8:57-67, 9:36-46, 10:15-25, 10:41-46, 11:18-22, 11:38-52, Figs. 5-9. The improvements include introducing into Madhavan-Park's system the ability to track and associate multiple user devices, including user event/action data collected therefrom, with a particular user profile irrespective of whether the device is used to access the content service provider from different locations or different IP addresses. The predictable results include a system that provides a mechanism to associate multiple user devices that accesses the system with a particular user profile based on common IP addresses, private IP addresses, port numbers, and MAC addresses.

212. In my opinion, a POSA would have had the skills and knowledge to combine the teachings of Madhavan-Park and Kato with a reasonable expectation of success in arriving at the subject matter recited in claim 1, in particular Element [1A]. First, Madhavan contemplates "variations and modifications" being made to its system, and indicates that such "variations and modifications" are within the capabilities of those having ordinary skill in the art. Ex. 1162, 12:63-13:1, 2:55-61. Second, as I explain above (*see* also § XII.A.1.a), the Madhavan-Park system already teaches receiving identification information from a user device and storing that information within a user profile (e.g., within user tables 210 of database 200). *See*

Ex. 1162, 5:37-66, 7:63-67, 8:42-48, 10:3-9, 10:35-40, 11:30-37, Figs. 3, 6-9. Additionally, as I explain above, a POSA would understand that each of the user devices within the Madhavan-Park system would already have a MAC addresses assigned thereto. Madhavan also describes that the processing servers 104 of content server 100 collects identification information (e.g., IP address) from a user device attempting to access the content server 100. *See* e.g., Ex. 1162, 7:15-26, 7:63-67, 8:42-48, 10:3-9. Thus, a POSA would have recognized that the processing servers 104 of content server 100 of the Madhavan-Park system would have been capable and suitable to connect to and collect MAC address information from each of devices 130 and 140. *See also* Ex. 1163, ¶¶ [0034], [0040], [0057], [0059]-[0060], [0064].

213. Therefore, it is my opinion a POSA would have recognized that associating multiple user devices that access the Madhavan-Park-Kato system with a particular user profile based on common IP addresses, private IP addresses, port numbers, and MAC addresses would require relatively simple software modifications to the Madhavan-Park system e.g., to collect and store MAC address information from a user device, which would have been well within the skill set of a POSA. It is my further opinion that a POSA would have recognized that it would have been straightforward to program Madhavan-Park's system to collect MAC address information from a user device, and to use this information to associate collected user data with a user's profile. For example, the resulting Madhavan-Park-

Kato system would receive MAC address information from a user device, along with corresponding user data, and store this information to database 200 based on the received MAC address information (and other device identification information, e.g., IP address of router used to access the Internet), which may subsequently be used to target advertisements to the user.

214. The proposed Madhavan-Park-Kato combination thus discloses and render obvious Element [1A].

c) [1B]: "(b) using user profile information derived from online activity from a first online user interface device via a first one of the online access IP addresses of the multitude of users, with the computer system automatically causing a first television advertisement to be directed to a set-top box for presentation via that set-top box, selectively, wherein the set-top box is indicated by the set-top box IP address associated with the first online access IP address"

215. As I explain above for Element [1A], processing servers 104 of content server 100 of Madhavan's modified systems (e.g., the Madhavan-Park and Madhavan-Park-Kato systems) "**electronically associat[es] an online access IP address of the user and a set-top box IP address of that user based on a common IP address**," more specifically, this association occurs when the processing servers 104 of content server 100 receives (from web servers 102) and then stores the identification information provided by respective user devices (e.g., client machine 130 and media device 140) to a common user profile, thereby associating the online

access IP address of the user and a set-top box IP address of that user. *See* Ex. 1162, 5:48-66, 7:33-36, 8:57-67, 10:3-9, 10:20-25, 11:18-22, Figs. 2, 3, 5-6. Thus, as I show above for Element [1A], a user **("a first online user**"), such as user 110, accesses content server 100 via client machine 130 ("**a first online user interface device**"), and does so using the common IP address of the Madhavan-Park (and Madhavan-Park-Kato) shared IP router ("**a first one of the online access IP addresses of the multitude of users**"). *See* Section XII.A.1.b; *see also* Section XII.A.1.a.

216. In the Madhavan-Park and Madhavan-Park-Kato systems, when a user connects to the content service provider via the Internet using client machine 130, web servers 102 of the content server 100 receives, from client machine 130 and via the public/common IP address of the shared IP router, user data containing events or actions performed by user 110 while accessing the Internet via client machine 130. Ex. 1162, 1:44-2:3, 3:1-4:13, 7:60-67, 8:37-56, 10:3-14, 10:65-11:11, 11:27-37, Figs. 2, 6, 9, 10. Web servers 102 sends the user data and device identification to processing servers 104. *Id.* The event/action data captured by content server 100, which includes "any type of online navigational interaction or search-related events" (Ex. 1162, 3:1-15), is stored by processing servers 104 within data storage module 106 (e.g., database 200) of the content server 100. Ex. 1162, 3:1-55, 4:3-6, 4:59-65, 5:66-6:2, 7:2-6, 8:37-41, 10:15-18, Figs. 2, 5-6. The processing servers 104 of

content server 100 collects this information from the various user devices that connect to the content service provider 100, such as client machine 130, and links the respective user data and identification information for each user device to a same user profile. *See* e.g., Ex. 1162, 5:53-66, 7:15-8:15, 8:37-9:40, 10:1-25, 10:65-11:22, Figs. 5-9.

217. Madhavan describes categorizing data indicating a user's online activity and storing the user data obtained from a user's multiple devices in database 200 along with the respective classification categories. Ex. 1162, 3:52-63, 6:3-12, 7:43-53, 8:57-67, 9:36-40, 10:15-25, 11:12-22. For example, Madhavan describes:

> [T]he processing servers 104 receive the user data and determine classification categories associated with each respective action performed by the user 110. If, for example, the user 110 watched a basketball game broadcast on the television set 142, the activity is assigned to a "sports" category and a "basketball" category. The user data and associated categories are further stored into respective category tables 220 and activity tables 230 within the data storage module 106 and are linked to the user profile of the user 110 stored within the

> user tables 210 based on the user identification information.

Ex. 1162, 7:43-53.

218. For example, as I explain above, processing servers 104 of the content server 100 uses the identification information of client machine 130 to identify and retrieve content classification categories related to user event/action data ("**user profile information**") obtained from client machine 130 or a different user device (e.g., media device 140) that previously accessed the content service provider. Ex. 1162, 5:48-66, 7:33-53, 8:57-9:3, 9:36-67, 10:21-25, 10:41-46, Figs. 5-9. I note that the '260 Patent broadly describes profile data as including "demographic or behavioral information," such as information "concerning the user's characteristics or the user's activities," which a POSA would understand to include the age or gender of a user. *See* Ex. 1101, 5:54-58. The user event/action data and classification categories associated with the user's online activity (for example, "sports" and/or "basketball) are further "stored into respective category tables 220 and activity tables 230 within the data storage module 106 [e.g., database 200] and are linked to the user profile of the user 110 stored within the user tables 210" based on the identification information of client machine 130 by processing servers 104. Ex. 1162, 8:63-67, 1:38-46, 2:62-3:55, 5:53-6:50, 7:33-36, 7:48-53, 8:9-15, 9:36-40, 10:15-25, 10:41-46, 11:18-22, 11:27-37, Figs. 3, 6 (annotated below), 9 (annotated

below), 10. Thus, Madhavan teaches "**user profile information derived from online activity from a first online user interface device via a first one of the online access IP addresses of the multitude of users**."

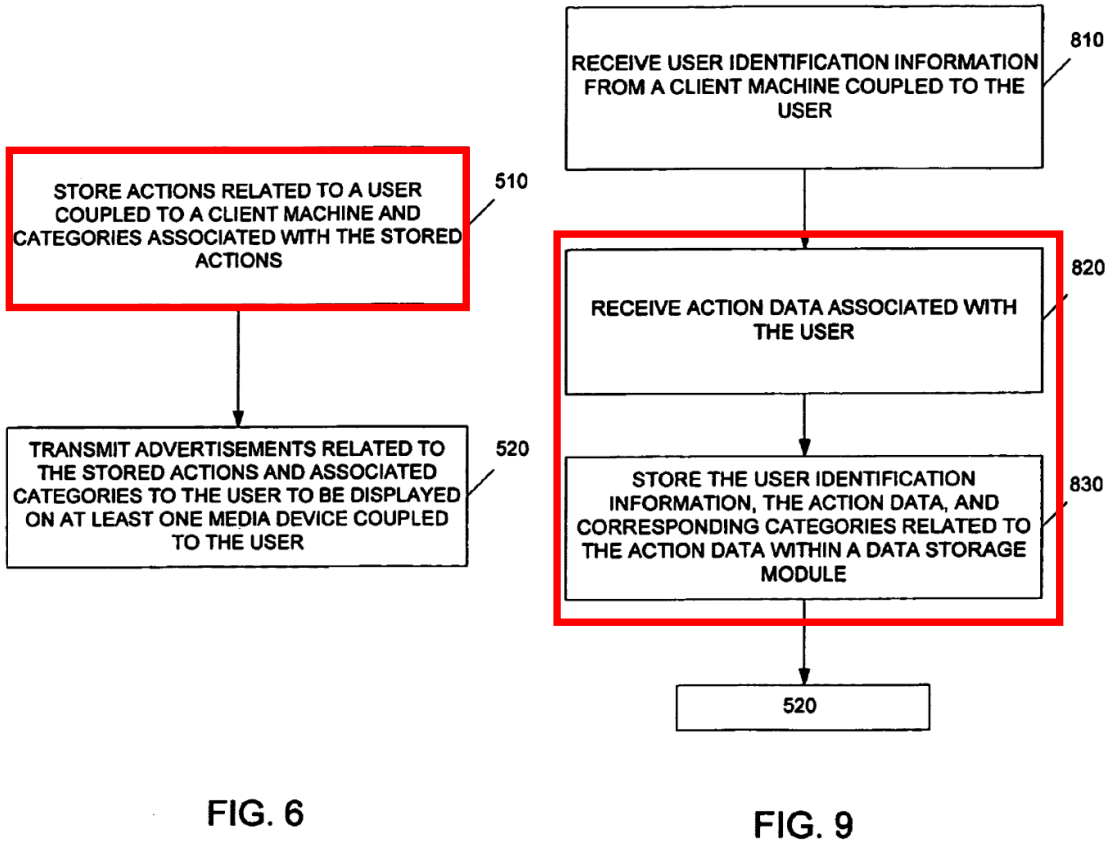

Ex. 1162, Figs. 6 and 9 (annotated)

219. As I explain above, by linking (e.g., associating) the user event/action data collected from the user's multiple devices (e.g., client machine 130 and media device 140) and the corresponding classification information for that user data to a common user profile based on the identification information of the user's devices, Madhavan's modified system is able to select and retrieve advertisements related to

stored user event/action data that was previously collected from the user's various devices. As shown above in Figure 6, Madhavan teaches that the content server 100 may send targeted advertisements to media device 140 based on previously-stored data that was collected from a different user device (e.g., client machine 130). Ex. 1162, 1:36-2:3, 3:52-4:13, 8:34-9:67, 10:41-46, 11:38-43, Fig. 6. As I explain above concerning Elements [1PRE] and [1A], the user's multiple devices that are used to access the content service provider will be linked to each other by processing servers 104 and the user event/action data obtained from those devices will be part of (and otherwise associated with) the same user profile. When the user is accessing the content service provider 100 of the Madhavan-Park system (and Madhavan-Park system) from one device (e.g., media device 140), processing servers 104 and advertising servers 105 of the content server 100 will determine targeted advertisements to send to the user based on data collected from their activity on other devices (e.g., client machine 130). *Id*.

220. Referring to the example that I discuss above (*see* ¶ [0218] of my Declaration), after initially accessing the content server 100 using client machine 130, the user may subsequently access the content server 100 of the Madhavan-Park system (and Madhavan-Park-Kato system) for one or more online sessions using a different user device, e.g., media device 140. *See* e.g., Ex. 1162, 1:55-2:3, 3:1-8, 3:64-4:13, 6:66-7:32, 9:9-35, 10:3-14. When the user accesses the content server 100

using media device 140 which includes a network-enabled TV set ("**set-top box**"), data indicating the events or actions of the user that are performed on media device 140 during the one or more online sessions is sent, via web servers 102 of to the content server 100, to processing servers 104, along with the identification information of the set-top box (e.g., at least the IP address of the router used by media device 140 to connect to the Internet). *See* e.g., Ex. 1162, 1:55-2:3, 3:1-8, 3:64-4:13, 9:36-40, 10:3-14, Fig. 2. Additionally, processing servers 104 of the content server 100 stores this information to database 200 (e.g., within user tables 210) in association with the user's profile and based on the identification information provided by the media device 140. *See* e.g., Ex. 1162, 5:53-6:8, 7:33-36, 7:48-53, 9:30-40, 10:3-25, 11:30-40.

221. Because the user has already accessed the content service provider via the Internet using client machine 130, the user's profile would already contain the identification information (such as IP address and port number) provided by the client machine 130 along with any corresponding user even/action data. *See* e.g., ¶¶ [0177]-[0178] of my Declaration above. Accordingly, the user's profile will now contain the identification information (e.g., common IP address) of client machine 130 ("**a first online user interface device**") and the identification information of media device 140 which includes a network-enabled TV set ("**set-top box**") and, thus, will have an association between the respective IP addresses of the client

machine 130 and the media device 140 ("**wherein the set-top box is indicated by the set-top box IP address associated with the first online access IP address**"). *See* e.g., Ex. 1162, 3:1-8, 5:53-59, 7:33-42, 7:60-67, 8:34-41, 10:15-25, 11:7-22. Because processing servers 104 of the content server 100 links the user event/action data (e.g., data indicating the events or actions performed by the user on media device 140) with the user's profile, this user data is also associated—via the identification information of the media device 140—with other user event/action data ("**user profile information**") indicating the actions or events performed by the user on other user devices, e.g., client machine 130, that have been linked to the user profile via their respective device identifiers. *Id.*; *see also* Ex. 1162, 8:9-23, 8:63-67, 9:36-46.

222. As shown above in step 520 of Figure 6 of Madhavan, when the user again accesses the content server 100 using media device 140, one or more servers of the content server 100 (such as processing servers 104 and advertising servers 105) may deliver targeted advertisements ("**a first television advertisement**") to the media device 140 which includes a network-enabled TV set, and thus, a STB, based on the identification information and user event/action data associated with the client machine 130 ("**a first online user interface device**") that was previously stored to database 200 by processing servers 104 of the content server 100. Ex. 1162, 8:34-9:67, 10:65-11:61, Figs. 6, 10.

223. More specifically, Madhavan explains that "at processing block 510, events or actions related to…user 110 coupled to…client machine 130 and classification categories associated with the user events or actions are stored within…data storage module 106 of…entity 100." Ex. 1162, 8:37-41. Then, at step 520, "advertisements related to the stored user actions or activities and their respective categories are transmitted to…user 110 to be displayed on one or more media devices 140 coupled to…user 110." Ex. 1162, 9:4-8, 7:14-21, 9:18-29 (TV set 142 and DVR 144 assigned unique IP addresses), 7:33-36 (user profile and action data associated with user identification information including unique IP addresses), 7:48-53. In particular, processing servers 104 of the content server 100 uses the identification information (IP address) of the media device 140 to identify the user's profile and to access respective tables within data storage module 106 (e.g., database 200) to retrieve classification categories related to previously-stored user event/action data for that user, for example, user event/action data previously collected from client machine 130. Ex. 1162, 7:48-53, 8:9-33, 9:36-67, 11:34-61. Advertising servers 105 of the content server 100 in Madhavan's modified systems communicate with processing servers 104 to obtain the identification information of the media device 140 and to retrieve classification categories, as discussed above. Additionally, the advertising servers 105 of the content server 100 access respective tables within advertising storage module 108, which is coupled to advertising servers

105, to retrieve and transmit an advertisement ("**a first television advertisement**") related to the previously-stored user event/action data. Ex. 1162, 4:57-5:2, 8:16-9:67, 10:47-11:61, Fig. 6-10.

224. In my opinion, the content server 100 "**automatically caus[es] a first television advertisement to be directed to a set-top box for presentation via that set-top box**" because the content server 100 causes the targeted advertisement to be sent to media device 140 without the user of the media device 140 having to request receipt or initiate the selection, delivery, or display of the targeted advertisements. *See* e.g., Ex. 1162, 9:4-8, 7:56-59, 8:26-33, 9:36-67, 10:41-55, 11:38-61, Fig. 5 (step 420), Fig. 6 (step 520), Fig. 10 (step 940), Fig. 11, Abstract. Accordingly, as I explain above, Madhavan-Park and Madhavan-Park-Kato teach that when the content server 100 and media device 140 are in communication with one another, processing servers 104 and advertising servers 105 of the content server 100 uses identification information of the media device 140 and user profile information (e.g., user event/action data and content classification categories) associated with identification information of client machine 130 to automatically cause a targeted advertisements to be directed to media device 140 for presentation via the media device 140 ("**using user profile information…, with the computer system automatically causing a first television advertisement to be directed to a set-top box for presentation via that set-top box, selectively**").

225. The proposed combinations thus render obvious Element [1B].

2. Independent Claim 61: "A method implemented using a programmed hardware computer system, the method comprising: (a) for each of a multitude of users, with the computer system, electronically associating an online user interface device identifier, which indicates an online user interface device of the user, and a set-top box identifier, which indicates a set-top box of that user, which electronic association is based on a common IP address, wherein network traffic is routed via the common IP address to both the online user interface device and the set-top box of that user; and (b) using user profile information derived from online activity from the online user interface device of a first user of the multitude of users via a first online access IP address, with the computer system automatically causing a first television advertisement to be directed to a set-top box for presentation via that set-top box, selectively, wherein the set-top box is indicated by the set-top box identifier associated with the online user interface device identifier of the first user's online user interface device."

226. Independent claim 61 is largely identical to claim 1. Ex. 1101, claims 1, 61; Ex. 1115. The main difference between these claims is claim 1 recites IP address-based associations, while claim 61 recites identifier-based associations for a user interface device and a set-top box. Ex. 1101, compare claim 1 ("electronically associating an online access IP address of the user and a set-top box IP address of that user"; "the set-top box is indicated by the set-top box IP address associated with the first online access IP address") to claim 61 ("electronically associating an online user interface device identifier, which indicates an online user interface device of the user, and a set-top box identifier, which indicates a set-top box of that user"; "the

set-top box is indicated by the set-top box identifier associated with the online user interface device identifier of the first user's online user interface device").

227. My above analysis for claim 1 addresses association of IP addresses as well as device identifiers of user interface devices and set-top boxes. *See* Section XII.A.1. It is my opinion that a POSA would thus have understood that Madhavan-Park and Madhavan-Park-Kato teaches the "online user interface device identifier" and the remaining limitations of claim 61 for the reasons discussed above at Section XII.A.1 with respect to the association of IP addresses.

228. Additionally, for the reasons I explained above with respect to claim 1, even if claim 61's "device identifier" requires something in addition to an IP address, this is taught by Park's IP address and port combination, or Kato's device-specific identifiers (e.g., MAC addresses). *See* Sections XII.A.1.b-c.

229. Finally, because Madhavan in view of Park and Madhavan in view of Park and Kato teaches all limitations of claim 61, it is my opinion that claim 61 would have been obvious to a POSA.

3. Dependent Claim 2: "The method of claim 1 wherein neither the user profile information in part (b) nor the association between the first online access IP address and its associated set-top box IP address includes personally identifiable information."

230. Claim 2 of the '260 Patent depends from claim 1 and further requires "wherein neither the user profile information in part (b) nor the association between

the first online access IP address and its associated set-top box IP address includes personally identifiable information." Ex. 1101, claim 2. As discussed above, claim 1, from which claim 2 depends, is taught by Madhavan-Park and Madhavan-Park-Kato.

231. As I discussed above for claim 1, deriving user profile information and associating the first online access IP address and a set-top box IP address are taught by Madhavan-Park and Madhavan-Park-Kato. Ex. 1162, 5:42-66, 7:33-53, 8:57-67, 9:36-40, 10:3-25; Sections XII.A.1.b-c. For example, data from a particular user device is associated with a particular user's profile because the content server 100 uses identification information, such as a device identifier (e.g., IP address), to associate multiple user devices as belonging to the same user. *Id*. Claim 2 further requires that "neither the user profile information . . . nor the association between the first online access IP address and its associated set-top box IP address includes personally identifiable information." Ex. 1101, claim 2. Madhavan describes that this user profile information includes "demographic data about the user 110, geographic data detailing user access locations, behavioral data related to the user 110, such behavioral data being generated by a behavioral targeting system, which analyzes user activities in connection with the entity 100, and other identification information related to each specific user." Ex. 1162, 5:60-66. In Madhavan, the demographic data may include, e.g., age, gender, or the like, and the behavioral data

may include, e.g., web searches. Ex. 1162, 1:38-46, 2:62-3:55, 5:53-6:8, 8:57-9:3. Non-personally-identifiable information, as explained in the '260 Patent includes, e.g., age, gender, and user interests (e.g., hobbies). Ex. 1101, 6:11-20. Accordingly, Madhavan's user profile information does "**[not] include[] personally identifiable information [PII].**" Rather, as described above, Madhavan's user profile information specifically includes non-personally-identifiable information, and does not include any information that would be characterized as PII. Ex. 1162, 1:38-46, 2:62-3:55, 5:53-6:8, 8:57-9:3.

232. As described above for Element [1A], the device identifiers being associated (i.e., common IP address and port numbers/MAC addresses) cannot be used, by themselves, to identify any specific person, and thus do not constitute "PII" as this term is used in the '260 Patent. *See* Section XII.A.1. For example, the '260 Patent specifically describes that PII may include "information that can be used to identify a specific person, including but not limited to: name, Social Security number (SSN), date of birth, street address, email address, static IP address (if any), phone number (home, work, wireless), financial account numbers (bank accounts, credit accounts, or any other financial data), driver's license number, vehicle registration number, vehicle license number, facial photographs, fingerprints, handwriting or signature, or any other information that can assist in identifying a specific person." Ex. 1101, 6:1-10. In contrast, non-PII is defined as "information about a person that

typically cannot be used to specifically identify that person, including but not limited to: city, state, or country of residence, age, gender, race, ethnicity, school or workplace (if sufficiently large), salary or income, hobbies, dynamically assigned IP addresses, online sites visited, online searches conducted, or other information that is useful to know about a person but done [SIC] not by itself allow one knowing the information to identify the particular person." Ex. 1101, 6:11-20. Accordingly, a POSA would have recognized that the association between the first online access IP address and the set-top box IP address in Madhavan-Park and Madhavan-Park-Kato user devices would also "**[not] include[] personally identifiable information [PII].**" *See* Section XII.A.1. Accordingly, when Madhavan-Park's content server 100 stores the device identifiers for separate user devices to a same profile along with corresponding user data, those associated device identifiers would not include personally identifiable information. Ex. 1163, ¶¶ [0009]-[0011], [0038]. For example, Park merely describes an ISP assigning public IP address to a router, and the router assigning a private IP address to any products associated with the corresponding network. *Id.* In these instances, the "private IP address cannot be used on the Internet and is only available on the internal network." Ex. 1163, ¶ [0010]. Rather, at most, such associated device identifiers would include non-PII. Ex. 1162, 1:38-46, 2:62-3:55, 5:53-6:8, 8:57-9:3; Ex. 1101, 6:1-20.

233. A POSA would understand, in view of their general knowledge, that the public IP address of Park's sharing router (within a home network) would be dynamically assigned by the ISP using the industry-standard Dynamic Host Configuration Protocol (DHCP), which was well-known and admitted prior art in the '260 Patent. *See* e.g., Ex. 1163, ¶¶ [0009]-[0010], [0031]-[0034], [0041], [0048]; Ex. 1167, Abstract, 4:59-62, 5:44-57; Ex. 1101, 4:17-22. The operation/functionality of Madhavan's modified system would not have been impacted by the addition of a shared router, like Park's router, that has a dynamically-assigned public IP address because Madhavan already contemplates the use of dynamically-assigned IP addresses as identification information. *See* Ex. 1162, 7:15-19. This is further supported in view of the fact that dynamic IP addresses may be assigned, as an example, for extended periods of time and, further, that it is not uncommon for DHCP servers to reassign the same dynamic IP address to a device to which it was previously assigned (provided of course it is still available).

234. Accordingly, as shown above, Madhavan-Park and Madhavan-Park-Kato teach the additional limitations included in dependent claim 2, and renders claim 2 obvious to a POSA.

4. Dependent Claim 80: "The method of claim 61 wherein neither the user profile information in part (b) nor the association between the online user interface device identifier and the set-top box identifier includes personally identifiable information."

235. Except for its dependency and the change from "first online access IP address/set-top box IP address" to "online user interface device identifier/set-top box identifier," claims 2 and 80 are nearly identical. See Ex. 1101, claims 2, 80. As I described above with respect to claim 61, a POSA would have found "online access IP addresses" obvious for the same reasons as "online user interface device identifiers." *See* Section XII.A.2. Thus, it is my opinion that a POSA would have found claim 80 obvious for the same reasons as claim 2. *See* Section XII.A.3.

5. Dependent Claim 3: "The method of claim 1 (i) further comprising, using user profile information derived from online activity from a second online user interface device via a second one of the online access IP addresses of the multitude of users, with the computer system automatically causing a second television advertisement to be directed to a second set top box for presentation via that set-top box, selectively, wherein the second set-top box is indicated by the set-top box IP address associated with the second online access IP address (ii) wherein which television advertisement is directed to or presented via which set-top box depends on differences between the online activities from the first and second online user interface devices, respectively."

236. Claim 3 of the '260 Patent depends from claim 1 and further requires (i) "using user profile information derived from online activity from a second online user interface device via a second one of the online access IP addresses of the multitude of users, with the computer system automatically causing a second

television advertisement to be directed to a second set top box for presentation via that set-top box, selectively, wherein the second set-top box is indicated by the set-top box IP address associated with the second online access IP address," and (ii) "wherein which television advertisement is directed to or presented via which set-top box depends on differences between the online activities from the first and second online user interface devices, respectively." Ex. 1101, claim 3. As discussed above, claim 1, from which claim 3 depends, is taught by Madhavan-Park and Madhavan-Park-Kato.

237. Claim Element [3A] simply recites the same processes as claim Element [1B], which Madhavan-Park and Madhavan-Park-Kato teaches, but for a second user using a second online user interface device and a second set-top box. Section XII.A.1.c As I discussed for Elements [1A] and [1B], Madhavan-Park and Madhavan-Park-Kato teach an advertising system that is configured to provide targeted advertising to client devices across geographical locations. Sections XII.A.1.b-c; Ex. 1162, 1:46-54, 5:59-66, 9:4-8, 9:36-67, Fig. 3. As I further discussed above for Elements [1A] and [1B], Madhavan's system is designed to send advertisements to a particular user (e.g., "a first user") at their media device 140 ("first set-top box") based on their previous online activity at client machine 130 ("a first online user interface device"), with both devices communicating with content

server 100 via a common IP address ("a first one of the online access IP addresses"). *Id*.

238. Madhavan's system is not limited to a single user. Rather, Madhavan explains that the system may handle advertising for multiple different users based on user profile information for each entity (e.g., "one or more user entities 110"). Ex. 1162, 4:37-42, 5:53-6:19. For example, Madhavan describes, and illustrates in Figure 3, storing user profile information for each of multiple entities 110. Ex. 1162, 5:53-6:19, Fig. 3. Each of the user entities may be associated with their own (i.e., different) online interface devices and set-top boxes, and those devices may access the internet from different locations (e.g., different user access locations indicated by different geographic data) via different IP addresses (i.e., their own IP sharing router). Ex. 1162, 1:46-54, 4:37-42, 5:53-6:19, 9:4-8, 9:36-67, Fig. 3. Accordingly, a POSA would have recognized that Madhavan teaches that the same advertising processes are performed for each of the multiple user entities 110. For example, like the first user entity 110, discussed for claim 1 (Section XII.A.1), a second user entity in Madhavan would similarly have a client machine 130 (a "**second online user interface device**") and media device 140 (e.g., a "**set-top box**" connected to a television) that both use a public IP address of a second shared IP router ("**the set-top box IP address**" and "**a second one of the online access IP addresses**"). And like the first user entity 110 (Sections XII.A.1.b-c), advertisements would be

delivered to the second user entity's media device 140, using the same processes I explained for claim 1, including advertisement selection based on the second user entity's user profile information derived from the second user's online activity at client machine 130 ("**wherein the second set-top box is indicated by the set-top box IP address associated with the second online access IP address**"). Ex. 1162, Abstract, 1:7-11, 1:46-54, 3:55-63, 5:59-66 9:4-8, 12:1-20, Fig. 11; Section XII.A.1.

239. A POSA would also have understood that Madhavan does not limit all of the described user entities 110 having to be co-located at the same internet access point. Ex. 1162, 5:59-66, Fig. 3. Accordingly, where a second user entity is at his or her home or another geographic location different from that of the first user entity, the "second online user interface device" of the second user entity would access the internet via a different shared IP router (and thus, public IP address). The IP address of the different shared IP router through which the second user entity is accessing the internet teaches the claimed "**a second one of the online access IP addresses**." *Id*.

240. It is further my opinion that Madhavan-Park and Madhavan-Park-Kato also teaches Element [3B]. As I discussed above for Element [3A], Madhavan discloses selecting and distributing targeted advertisements to user media devices of user entities based on the entities' user profile information. Ex. 1162, Abstract, 1:7-11, 1:46-54, 3:55-63, 9:4-8, 9:36-67, 12:1-20, Fig. 11. Moreover, Madhavan teaches

that each entity's user profile information may differ based on a variety of activities such as a geographic location and behavioral information such as online user activities ("**online activity**"). *Id.*, 5:53-6:19, Fig. 3. Accordingly, a POSA would have recognized that if the user profile information is different between entities, different advertisements may be selected and directed to those entities' devices in light of the differences in their profiles ("**wherein which television advertisement is directed to or presented via which set-top box depends on differences between the online activities from the first and second online user interface devices, respectively**."). Ex. 1162, Abstract, 1:7-11, 1:46-54, 3:55-63, 9:4-8, 9:36-67, 12:1-20, Fig. 11. For example, a first entity's profile information may indicate frequent network access from coffee shops at their client machine 130, while a second entity's profile information may indicate frequent access from bookstores from their own client machine 130. In this example, Madhavan's system would target advertisements to the first entity's media device 140 (STB), based on the first entity's apparent like of coffee, while targeting advertisements to the second entity's media device 140 (STB) based on his or her interest in books.

241. Accordingly, in Madhavan-Park and Madhavan-Park-Kato, advertisements would have been selected and provided depending on the different profile information of different user entities. And as discussed for claim 1, the user profile information is derived based on the online activity of the user through their

devices ("**the online activities from the first and second online user interface devices**"). Section XII.A.1.c; Ex. 1162, 5:53-6:19, Fig. 3. Moreover, each of these user entities may be associated with a media device 140 which includes a set-top box, configured to receive and/or present the advertisements. This targeting of advertisements to media devices based on different user profile information, taught in Madhavan-Park and Madhavan-Park-Kato, teaches the claimed "wherein which television advertisement is directed to or presented via which set-top box depends on differences between the online activities from the first and second online user interface devices, respectively."

242. Accordingly, as I have explained above, it is my opinion that Madhavan-Park and Madhavan-Park-Kato teach the additional limitations included in dependent claim 3, and renders claim 3 obvious to a POSA.

6. **Dependent Claim 83: "The method of claim 61: (i) further comprising, using user profile information derived from online activity from the online user interface device of a second user of the multitude of users via a second online access IP address, with the computer system, automatically causing a second television advertisement to be directed to a second set-top box for presentation via that set-top box, selectively, wherein the second set-top box is indicated by the set-top box identifier associated with the online user interface device identifier of the second user's online user interface device, and (ii) wherein which television advertisement is directed to or presented via which set-top box depends on differences between the online activities from the online user interface devices of the first and second users, respectively."**

243. Claim 83 is directed to the same concepts as claim 3, differing only in some insubstantial wording changes and dependency. *See* e.g., Section XII.A.2 (discussing the use of identifier-based associations for a user interface device and a STB instead of IP address-based associations). It is my opinion that my analysis for claim 3 remains applicable to claim 83. Therefore, it is my opinion that Madhavan-Park and Madhavan-Park-Kato render claim 83 obvious for the same reasons as claim 3. *See* Section XII.A.5.

7. **Dependent Claim 4: "The method of claim 3 wherein neither the user profile information in part (i) nor the association between the second online access IP address and its associated set-top box IP address includes personally identifiable information."**

244. Claim 4 of the '260 Patent depends from claim 3 and further requires "wherein neither the user profile information in part (i) nor the association between the second online access IP address and its associated set-top box IP address includes

personally identifiable information." Ex. 1101, claim 4. As I discussed above, claim 3 is taught by Madhavan-Park and Madhavan-Park-Kato. *See* Section XII.A.5.

245. Other than its dependency on claim 3, claim 4 is otherwise identical to claim 2. Thus, for the same reasons as I described above with regard to claim 2, Madhavan-Park and Madhavan-Park-Kato both teach that neither the electronic association nor the user profile information for the second user include personally-identifiable information. Ex. 1162, 1:38-46, 2:62-3:55, 5:53-6:8, 8:57-9:3; Ex. 1101, 6:1-21; *see* Section XII.A.5.

246. Accordingly, as shown above, Madhavan-Park and Madhavan-Park-Kato teaches the additional limitations included in dependent claim 4, and renders claim 4 obvious to a POSA.

8. Dependent Claim 84: "The method of claim 83 wherein neither the user profile information in part (i) nor the association between the second online user interface device identifier and its associated set-top box identifier includes personally identifiable information."

247. Claim 84 of the '260 Patent is substantially identical to claim 4. *See* Ex. 1101, claim 4. Despite some difference in wording, both claims relate to the online access IP addresses/online user interface device identifiers and set-top box IP addresses/set-top box identifiers being associated without including personally identifiable information. It is my opinion that a POSA would have found the minor differences inconsequential in teaching the claimed limitations for the reasons

described above with respect to claim 61. *See* Section XII.A.2. Therefore, it is my opinion that a POSA would have found claim 84 obvious for the same reasons as claim 4. *See* Section XII.A.7.

9. Dependent Claim 5: "The method of claim 1 further comprising storing in the computer system electronic associations between the online access IP addresses and the set-top box IP addresses."

248. Claim 5 of the '260 Patent depends from claim 1 and further requires "storing in the computer system electronic associations between the online access IP addresses and the set-top box IP addresses." Ex. 1101, claim 5. As discussed above, claim 1, from which claim 5 depends, is taught by Madhavan-Park, and Madhavan-Park-Kato. *See* Section XII.A.1.

249. As I explained above at Section XII.A.1.b with respect to Element [1A], in the underlying combinations of Madhavan-Park and Madhavan-Park-Kato, processing servers 104 of Madhavan's content server 100 electronically associates the device identifiers of client machine 130 and media device 140 by their use of a common IP address and further by storing the common IP addresses and the port number (Park) or MAC address (Kato) of each device as its identification data in the user's profile in database 200. Ex. 1163, ¶ [0038]; Ex. 1164, ¶¶ [0006], [0009]-[0011], [0031]-[0036], [0038]-[0046], [0049]-[0057], [0063]-[0070]; *see* Section XII.A.1. Thus, a POSA would have understood that the electronic association between the client machine 130 and media device 140 is stored by the processing

servers 104 of content server 100. For example, one or more servers of the content server 100, such as processing server 104, receive the identification information along with event/action data collected from a user's device (e.g., client machine 130 and/or media device 140) and stores this information within data storage module 106 of the content server 100, e.g., in a database. Ex. 1162, 3:1-8, 5:37-6:12, 7:33-36, 8:9-25, 8:42-48, 10:3-25, 10:35-40, 10:67-11:6, 11:30-37, Figs. 5-9. The database (e.g., database 200) of the content server 100 "may be implemented as a relational database, and may include a number of tables having entries, or records, that are linked by indices and keys." Ex. 1162, 5:37-47, Fig. 3. This database provides an association between the IP address of the client machine 130 and the IP address of the media device 140 connected through IP sharing router because the devices share (i.e., are associated by) the common public IP address.

250. As I discuss above, when users connect to the content service provider using respective user devices (e.g., client machine 130 and/or media device 140), identification information (e.g., IP address) for each user device is sent to processing servers 104, along with event/action data that is collected from the users' devices and associated with the identification information for each device. *See* e.g., Ex. 1162, 7:14-55, 7:60-8:15, 8:37-67. The collected event/action data, stored within activity tables 230 of database 200, is used to create user profiles, which are stored in user tables 210 of database 200, that as I explain above consolidate various

information (e.g., geographic, identification, behavioral data) from the multiple devices associated with each user. Ex. 1162, 5:48-6:12, 7:14-26, 7:33-42, 8:44-48, 9:18-25. Accordingly, in view of the above discussion, processing servers 104 of the content server 100 of the respective Madhavan-Park and Madhavan-Park-Kato systems store the electronic associations between IP address of each user device (e.g., client machine 130, media device 140) because Madhavan's servers, associate, via user profiles, various information (e.g., user action or event activity, geographic data, identification information, etc.) collected from multiple devices associated with a user of the content service provider. And the stored user profile also contains the respective identification information (e.g., common IP address, port number, MAC address) and user event/activity data obtained from each of the devices (e.g., client machine 130, media devices 140) associated with the user based on the identification information provided by the respective devices. Ex. 1162, 3:1-8, 5:53-6:12, 7:33-36, 8:9-25, 10:3-25, Figs. 5-10.

251. This association between client machine 130 and media devices 140, via their respective identification information, allows the content server 100 to identify and retrieve a user profile along with previously-stored event/action data that is obtained from a first user device (e.g., client machine 130) based on the identification information of a second (associated) user device (e.g., media device 140). The ability to identify and retrieve a user's profile and associated event/action

data from database 200 using identification information allows the content server 100 to add event/action data from the second device (e.g., media device 140) to the database 200 and to associate that data with the user's profile, such that the previously-stored event/action data obtained from the first device (e.g., client machine 130) can be used to direct advertisements to the second device (e.g., media device 140). Ex. 1162, 7:43-8:8, 8:26-9:67.

252. Accordingly, as shown above, Madhavan-Park and Madhavan-Park-Kato teaches the additional limitations included in dependent claim 5, and renders claim 5 obvious to a POSA.

10. Dependent Claim 6: "The method of claim 1 wherein the online activity comprises requesting a search."

253. Claim 6 of the '260 Patent depends from claim 1 and further requires "wherein the online activity comprises requesting a search." Ex. 1101, claim 6. As discussed above, claim 1 is taught by Madhavan-Park and Madhavan-Park-Kato. *See* Section XII.A.1.

254. Madhavan teaches deriving user profile information from user online activity, as I discussed above with regard to Element [1B]. Ex. 1162, 1:38-46, 2:62-3:55, 5:53-6:50, 8:38-67, 10:65-11:11, 11:18-37, Figs. 3, 6, 9, 10; Section XII.A.1.c. Claim 6 further requires that "the online activity comprises requesting a search." Ex. 1101, claim 6. Madhavan describes that online activity such as "multiple events performed within one or more user search and navigation sessions," including search

queries, search clicks, and search related events, are used to derive the user profile information. Ex. 1162, 3:1-15; *see also id*., 8:1-9, 8:49-56.

255. Therefore, as shown above, Madhavan-Park and Madhavan-Park-Kato each teaches the additional limitations included in dependent claim 6, and renders claim 6 obvious to a POSA.

11. Dependent Claim 85: "The method of claim 61 wherein the online activity comprises requesting a search."

256. Except for their dependencies, claims 6 and 85 are identical. *See* Ex. 1101, claim 85. Therefore, it is my opinion that claim 85 would have been obvious to a POSA in view of Madhavan-Park and Madhavan-Park-Kato for the same reasons as claim 6. *See* Section XII.A.10.

12. Dependent Claim 7: "The method of claim 1 wherein the first television advertisement is caused to be directed to the set-top box upon first being contacted by the set-top box after the user profile information is derived."

257. Claim 7 of the '260 Patent depends from claim 1 and further requires "wherein the first television advertisement is caused to be directed to the set-top box upon first being contacted by the set-top box after the user profile information is derived." Ex. 1101, claim 7. As discussed above, claim 1, from which claim 7 depends, is taught by Madhavan-Park and Madhavan-Park-Kato.

258. As discussed above with reference to Element [1A], by linking (e.g., associating) the user data collected from the user's multiple devices and the

corresponding classification information for that user data to a common user profile based on the identification information (such as device identifiers including a common IP address) of the user's devices, Madhavan's modified system is able to select and retrieve advertisements related to stored user data that was previously collected from the user's various devices. For example, advertising servers 105 of Madhavan's content server 100 use the identification information provided by a particular user device (e.g., media device 140) and associated content classification categories to access tables within advertising storage module 108 and to retrieve advertisements that relate to previously-stored user data and classification categories. Ex. 1162, 6:3-28, 7:34-53, 8:9-33, 8:56-9:3, 9:36-67, 10:35-55, 11:34-54, Figs. 2-3, 10. The previously-stored user data used to retrieve relevant advertisements is maintained in database 200 (e.g., activity tables 230) and may have been generated or collected when the user previously accessed the content service provider from a different user device, such as client machine 130. Ex. 1162, 3:1-8, 5:53-6:12, 7:33-8:8, 8:25-9:67, 10:3-25, Figs. 6, 8, 9, 10.

259. Specifically, Madhavan teaches user 110 first accessing content server 100 using a client machine 130. Ex. 1162, Abstract, 4:37-45, 5:3-11, 7:33-36, 7:60-67, 8:42-48, 10:35-40, 10:67-11:6. Client device 130 sends identification information and action/event data to web servers 102 of content server 100, which sends the data to processing servers 104, which generates activity information such

as content classification categories for the action/event data. Ex. 1162, 8:38-67, 3:1-55, 5:36-6:19, 10:65-11: 37, Figs. 2, 3, 6, 9, 10. Processing servers 104 then stores the identification information, action/event data, and content classification categories in the user profile. Ex. 1162, 3:1-8, 5:53-6:12, 7:33-36, 8:9-25, 10:3-25, Figs. 5, 6, 9, 10.

260. Madhavan teaches that user 110 then connects to web servers 102 of content server 100 using a different device, such as a media device 140 (which includes a "**a set-top box**"). Ex. 1162, Abstract, 1:46-54, 3:55-63, 4:37-56, 5:28-36, 7:15-26, 9:4-29, 11:27-61, Figs. 2, 6, 10. Media device 140 sends identification information to web servers 102 of content server 100, and processing servers 104 and advertising servers 105 responsively accesses the user's profile and directs a targeted advertisement to media device 140 ("**wherein the first television advertisement is caused to be directed to the set-top box upon first being contacted by the set-top box after the user profile information is derived**"). Ex. 1162, 11:37-61, 10:41-64, 9:4-67, Figs. 2, 6, 8, 9, 10.

261. Accordingly, as shown above, Madhavan-Park and Madhavan-Park-Kato teach the additional limitations included in dependent claim 7, and renders claim 7 obvious to a POSA.

13. Dependent Claim 86: "The method of claim 61 wherein the first television advertisement is caused to be directed to the set-top box upon first being contacted by the set-top box after the user profile information is derived."

262. Except for their dependencies, claims 86 and 7 are identical. *See* Ex. 1101, claim 7. Therefore, it is my opinion that a POSA would have found claim 86 obvious in view of Madhavan-Park and Madhavan-Park-Kato for the same reasons as claim 7. *See* Section XII.A.12.

14. Dependent Claim 8: "The method of claim 1 wherein the first television advertisement is selected from among a plurality of possible television advertisements based at least in part on the user profile information derived from the online activity from the first online access IP address."

263. Claim 8 of the '260 Patent depends from claim 1 and further requires "wherein the first television advertisement is selected from among a plurality of possible television advertisements based at least in part on the user profile information derived from the online activity from the first online access IP address." Ex. 1101, claim 8. As discussed above, claim 1, from which claim 8 depends is taught by Madhavan-Park and Madhavan-Park-Kato.

264. As explained above, in the Madhavan-Park and Madhavan-Park-Kato combinations, the advertisements are selected from a group of possible advertisements (the claimed "a plurality of possible television advertisements") based on user profile information, which is derived in part from user online activity such as events or other actions performed by a user while accessing a network. *See*

Section XII.A.1.c; Ex. 1162, 5:53-6:19, Fig. 3. More specifically, Madhavan explains that processing servers 104 of content server 100 receives such action/event data from the client device 130 via web servers 102, and uses that information to determine content classification categories. Ex. 1162, 1:38-46, 2:62-3:55, 5:53-6:50, 8:38-67, 10:65-11:11, 11:18-37, Figs. 2, 3, 6, 9, 10. In one example, if a user, through their client device 130, is determined to have requested an online webpage related to a basketball game, processing servers 104 of the content server 100 may associate a content classification category of "sports" or "basketball" to that user. Ex. 1162, 8:38-67, 10:65-11:37, Figs. 6, 9, 10. Requesting an online webpage is an example of online activity from an online IP address, i.e., the IP address of the client device 130. Both the action/event data and the content classification categories are subsequently stored into the user 100's profile, and thus, this teaches the claimed "the user profile information derived from the online activity from the first online access IP address."

265. Madhavan further teaches that after the content service provider 100 receives this profile information, the web servers 102 of content server 100 may receive identification data for a media device 140 that is also associated with the same user of client device 130. Ex. 1162, 9:4-67, 11:27-37, Figs. 2, 6, 10. At that time, Madhavan explains that the advertisement server 105 will select an advertisement based on the user profile information for the user (which includes the

action/event data and classification categories as I explained above), and send that selected advertisement to media device 140. Ex. 1162, 11:37-61, 10:41-64, 9:4-67, Figs. 6, 8-10. For example, Madhavan discloses that the content server 100 (via the advertisement server 105) "access[es] the advertising storage module 108 to retrieve advertisements related to the previously stored actions of the user 110 and the retrieved categories." Ex. 1162, 11:44-54, Figs. 2, 10. Thus, it is my opinion that this targeted advertising using user profile information to select and send an advertisement to a user's media device 140 teaches the claimed "wherein the first television advertisement is selected…based at least in part on the user profile information."

266. Madhavan further teaches that targeted advertisements are selected from multiple available advertisements. In particular, in one example, Madhavan teaches an advertising storage module 108 that stores the advertisements that may be selected for user entities. Ex. 1162, 4:55-5:2, 6:51-65, Fig. 2. As I noted above, the advertising server is configured to access "the advertising storage module 108 to retrieve advertisements related to the previously stored actions of the user 110 and the retrieved classification categories." Ex. 1162, 8:16-34, 11:44-54, Figs. 2, 10. A POSA would understand that retrieving advertisements related to actions or classification categories would include filtering out other advertisements that do not relate to those actions or classification categories. Accordingly, Madhavan teaches

a storage module 108 that stores more than one advertisement (both advertisements related to the profile information as well as advertisements unrelated to the profile information), and further describes that a targeted advertisement may be selected from that "plurality of possible television advertisements." *Id*.

267. Accordingly, as shown above, Madhavan-Park and Madhavan-Park-Kato teach the additional limitations included in dependent claim 8, and renders claim 8 obvious to a POSA.

15. Dependent Claim 87: "The method of claim 61 wherein the first television advertisement is selected from among a plurality of possible television advertisements based at least in part on the user profile information derived from the online activity from the first online access IP address."

268. Except for their dependencies, claims 87 and 8 are identical. *See* Ex. 1101, claim 8. Therefore, it is my opinion that a POSA would have found claim 87 obvious in view of Madhavan-Park and Madhavan-Park-Kato for the same reasons as claim 8. *See* Section XII.A.14.

16. Dependent Claim 9: "The method of claim 8 wherein the first television advertisement is selected based at least partly on demographic or behavioral attributes included in the user profile information."

269. Claim 9 of the '260 Patent depends from claim 8 and further requires "wherein the first television advertisement is selected based at least partly on demographic or behavioral attributes included in the user profile information." Ex.

1101, claim 9. As discussed above, claim 8, from which claim 9 depends is taught by Madhavan-Park and Madhavan-Park-Kato.

270. As I explained above for claim 8 in Section XII.A.14, Madhavan teaches that the user profile information may include "behavioral data" related to the user. Ex. 1162, 5:53-6:19. For example, Madhavan discloses that a user's actions taken online may be included as part of behavioral data. Madhavan also teaches demographic data being stored as part of user profile information. Ex. 1162, 5:53-65. And as also explained for claim 8, such user profile information is used in Madhavan to select targeted advertising. Section XII.A.14; Ex. 1162, 4:27-36 (describing "enabling automatic matching of advertising information to events or actions and interests of users."); *see also* 8:42-56, 9:36-67, 11:27-67, Figs. 6, 10. Accordingly, it is my opinion that Madhavan-Park and Madhavan-Park-Kato teach the claimed "wherein the first television advertisement is selected based at least partly on demographic or behavioral attributes included in the user profile information."

17. Dependent Claim 88

271. Except for their dependencies, claim 88 is identical to claim 9. *See* Ex. 1101, claim 88. Therefore, it is my opinion that a POSA would have found claim 88 obvious in view of Madhavan-Park and Madhavan-Park-Kato for the same reasons as claim 9. *See* Section XII.A.16.

18. Dependent Claim 12: "The method of claim 1 further comprising: (i) receiving at the computer system an identifier corresponding to the set-top box of the user; and (ii) with the computer system causing the television advertisement to be transmitted only if directed to the set-top box corresponding to the identifier."

272. Claim 12 of the '260 Patent depends from claim 1 and further requires Elements [12A]: "receiving at the computer system an identifier corresponding to the set-top box of the user," and [12B]: "with the computer system causing the television advertisement to be transmitted only if directed to the set-top box corresponding to the identifier." Ex. 1101, claim 12. As discussed above, claim 1, from which claim 12 depends is taught by Madhavan-Park and Madhavan-Park-Kato.

273. Web servers 102 of content server 100 in Madhavan-Park and Madhavan-Park-Kato receives identification information (such as a public IP address (Park), port number (Park), and/or MAC address (Kato)) for each of its user devices (such as a media device 140 that includes a STB) and sends the information to processing servers 104, which stores the identification information in the corresponding user profile. Ex. 1162, 3:52-63, 5:53-66, 6:3-12, 7:15-26, 7:43-53, 8:56-67, 9:36-40, 10:15-25, 11:12-22, Fig. 2.

274. Claim Element [12B] recites only sending an advertisement back to the set-top box if the identifier (as noted above with regard to claim Element [12A]) is a match. Referring to the example that I discuss above (Sections XII.A.1.b-c) after

initially accessing the content server 100 using client machine 130, the user may subsequently access web servers 102 of the content server 100 for one or more online sessions using a different user device, e.g., media device 140. *See* e.g., Ex. 1162, 1:55-2:3, 3:1-8, 3:64-4:13, 6:66-7:33, 9:9-35, 10:3-14, Fig. 2.

275. When the user accesses the content server 100 using media device 140 which includes a network-enabled TV set ("**set-top box**"), data indicating the events or actions of the user that are performed on media device 140 during the one or more online sessions is sent to the content server 100, along with identification information such as identification information of the set-top box (e.g., at least the IP address of the router used by media device 140 to connect to the Internet). *See* e.g., Ex. 1162, 1:55-2:3, 3:1-8, 3:64-4:13, 9:36-40, 10:3-14.

276. When the user accesses the content server 100 using media device 140, processing servers 104 receives the identification information from media device 140 via web servers 102 ("**receiving at the computer system an identifier corresponding to the set-top box of the user**"). Ex. 1162, 7:33-36, 8:57-67, 10:3-9, 10:20-25, 11:18-22, Fig. 3. As shown in step 520 of Figure 6 of Madhavan, one or more servers of the content server 100 may deliver targeted advertisements to the media device 140 which includes a network-enabled TV set, and thus, a STB, based on the identification information and user event/action data associated with the client

machine 130 that was previously stored to database 200 by the content server 100. Ex. 1162, 7:14-22, 8:34-41, 9:4-8, 9:36-67, Figs. 2, 6.

277. More specifically, Madhavan explains that "at processing block 510, events or actions related to…user 110 coupled to…client machine 130 and classification categories associated with the user events or actions are stored within…data storage module 106 of…entity 100." Ex. 1162, 8:37-41. Then, at step 520, "advertisements related to the stored user actions or activities and their respective categories are transmitted to…user 110 to be displayed on one or more media devices 140 coupled to…user 110." Ex. 1162, 9:4-8, 7:14-22, 7:48-53, 9:18-29 (TV set 142 and DVR 144 assigned unique IP addresses), 7:33-36 (user profile and action data associated with user identification information including unique IP addresses). In particular, the content server 100 uses the identification information (IP address) of the media device 140 to identify the user's profile and to access respective tables within data storage module 106 (e.g., database 200) to retrieve classification categories related to previously-stored user event/action data for that user, for example, user event/action data previously collected from client machine 130. Ex. 1162, 7:48-53, 8:9-33, 9:36-67, 11:34-61.

278. Advertising servers 105 of the content server 100 in Madhavan's modified systems communicate with processing servers 104 to obtain the identification information of the media device 140 and to retrieve classification

categories, as discussed above. Additionally, the advertising servers 105 of the content server 100 access respective tables within advertising storage module 108, which is coupled to advertising servers 105, to retrieve and transmit an advertisement related to the previously-stored user event/action data to media device 140 using its identification information (e.g., device identifier). Ex. 1162, 4:57-5:2, 8:16-33, 9:36-67, 10:47-67, 11:38-61, Figs. 6-10. In the Madhavan-Park and Madhavan-Park-Kato systems, the above-discussed identification information (e.g., device identifier) would be a common IP address along with a unique port number and/or a unique MAC address. *See* Sections XII.A.1.b-c; Ex. 1162, 1:8-12, 1:44-2:3, 3:52-4:13, 4:37-42, 5:3-17, 5:28-32, 7:15-9:67, 10:6-25, 10:33-64, 11:30-61, Figs. 1-2, 5-9; Ex. 1163, ¶¶ [0010]-[0011], [0030]-[0038], Figs. 1-2; Ex. 1164, ¶¶ [0006], [0009]-[0011], [0031]-[0036], [0038]-[0046], [0049]-[0057], [0063]-[0070]. This identification would specifically identify media device 140 (which includes the STB). *Id.* And because the advertisement is only directed to the media device 140 that is associated with the user, and thus the same identification information, Madhavan-Park and Madhavan-Park-Kato teaches "**causing the television advertisement to be transmitted only if directed to the set-top box corresponding to the identifier**."

279. Therefore, it is my opinion that Madhavan-Park and Madhavan-Park-Kato teaches "receiving at the computer system an identifier corresponding to the

set-top box of the user," and "with the computer system causing the television advertisement to be transmitted only if directed to the set-top box corresponding to the identifier," as required by claim 12.

280. Accordingly, as shown above, Madhavan-Park and Madhavan-Park-Kato teach the additional limitations included in dependent claim 12, and renders claim 12 obvious to a POSA.

19. Dependent Claim 13: "The method of claim 1 wherein part (a) comprises the act of storing the common IP address, and further comprising updating the common IP address of the user."

281. Claim 13 of the '260 Patent depends from claim 1 and further requires "wherein part (a) comprises the act of storing the common IP address, and further comprising updating the common IP address of the user." Ex. 1101, claim 13. As discussed above, claim 1 is taught by Madhavan-Park and Madhavan-Park-Kato.

282. In Madhavan-Park and Madhavan-Park-Kato, each time the user device accesses entity 100, processing server 104 adds additional information to the corresponding user profile, including the most recent identification information (which includes a public IP address of a shared IP router ("**common IP address**"), port number, and/or MAC address) and event/action data ("**storing the common IP address**" and "**updating the common IP address of the user**"). Ex. 1162, 3:1-8, 5:53-6:12, 7:33-36, 8:9-25, 10:3-25, Figs. 6, 8-10. Because the IP address is updated

and stored for every online session of a user device, the common IP address would obviously also be updated and stored to ensure accurate and complete user profiles.

283. Therefore, it is my opinion that Madhavan-Park and Madhavan-Park-Kato teach "wherein part (a) comprises the act of storing the common IP address, and further comprising updating the common IP address of the user," as required by claim 13.

284. Accordingly, as shown above, Madhavan-Park and Madhavan-Park-Kato teach the additional limitations included in dependent claim 13, and renders claim 13 obvious to a POSA.

20. Dependent Claim 92: "The method of claim 61 wherein part (a) comprises the act of storing the common IP address, and further comprising updating the common IP address of the user."

285. Except for its dependency, the claim 92 is identical to claim 13. Ex. 1101, claims 13, 92. Therefore, it is my opinion that a POSA would have found claim 92 obvious in view of Madhavan-Park and Madhavan-Park-Kato for the same reasons as claim 13. *See* Section XII.A.19.

21. Dependent Claim 14: "The method of claim 1 wherein part (a) comprises the act of storing the common IP address, and further comprising periodically updating the common IP address of the user."

286. Claim 14 of the '260 Patent depends from claim 1 and further requires "wherein part (a) comprises the act of storing the common IP address, and further

comprising periodically updating the common IP address of the user." Ex. 1101, claim 14. As discussed above, claim 1, from which claim 14 depends, is taught by Madhavan-Park and Madhavan-Park-Kato.

287. Claim 14 is identical to claim 13 except that it specifies "periodically" updating the common IP address. As I discussed above for claim 13, each time the user device accesses entity 100, processing server 104 adds additional information to the corresponding user profile, including the most recent identification information (which includes a public IP address of a shared IP router ("**common IP address**"), port number, and/or MAC address) and event/action data ("**storing the common IP address**" and "**updating the common IP address of the user**"). Ex. 1162, 3:1-8, 5:53-6:12, 7:33-36, 8:9-25, 10:3-25, Figs. 6, 8-10. A POSA would understand this updating to be "periodic" because it happens each time a user device accesses entity 100.

288. Accordingly, as shown above, Madhavan-Park and Madhavan-Park-Kato teach the additional limitations included in dependent claim 14, and renders claim 14 obvious to a POSA.

22. Dependent Claim 93: "The method of claim 92 wherein part (a) comprises the act of storing the common IP address in the computer system, and further comprising periodically updating the common IP address of the user."

289. Except for its dependency and some insubstantial wording changes, claim 93 is identical to claim 14. It is my opinion that my analysis of

claim 14 is applicable to claim 93. Therefore, it is my opinion that a POSA would have found claim 93 obvious in view of Madhavan-Park and Madhavan-Park-Kato for the same reasons as claim 14. *See* Section XII.A.21.

23. Dependent Claim 91: "The method of claim 61 further comprising the computer system: (i) receiving an identifier corresponding to the set-top box of the user; and (ii) causing the television advertisement to be transmitted only if directed to the set-top box corresponding to the identifier."

290. Except for their dependencies, claims 91 and 12 are substantially identical. *See* Ex. 1101, claim 12. Therefore, it is my opinion that a POSA would have found claim 91 obvious in view of Madhavan-Park and Madhavan-Park-Kato for the same reasons as claim 12. *See* Section XII.A.18.

24. Dependent Claim 17: "The method of claim 1 wherein the computer system is a central ad server and the first television advertisement is received at the central ad server and directed to the set-top box."

291. Claim 17 of the '260 Patent depends from claim 1 and further requires "wherein the computer system is a central ad server and the first television advertisement is received at the central ad server and directed to the set-top box." Ex. 1101, claim 17. As discussed above, claim 1 is taught by Madhavan-Park and Madhavan-Park-Kato. *See* Section XII.A.1.

292. One or more advertising servers 105 ("**central ad server**") are included in the content service provider, as I described above with regard to claim 1. Ex.

1162, 4:57-5:2, 8:16-33, 9:36-67, 10:47-64, 11:44-61, Figs. 1-2; Section XII.A.1. In Madhavan, advertisements are received by the advertising servers 105, and subsequently sent to the media device 140 ("**the first television advertisement is received at the central ad server and directed to the set-top box**"). Ex. 1162, 4:26-5:2, 5:28-32, 10:47-64. For example, Madhavan describes "advertisements associated with the classification categories are retrieved" by the advertising servers 105, and that these advertising servers 105 "further transmit the retrieved advertisements to the user 110 to be displayed on the client machine 130." Ex. 1162, 10:47-64.

293. Accordingly, as explained above, Madhavan-Park and Madhavan-Park-Kato teaches the additional limitations included in dependent claim 17, and renders claim 17 obvious to a POSA.

25. Dependent Claim 96: "The method of claim 61 wherein the computer system is a central ad server and the first television advertisement is received at the central ad server and directed to the set-top box."

294. Except for their dependencies, claim 96 is identical to claim 17. *See* Ex. 1101, claim 17. As I discussed above at Section XII.A.2, claim 61 is taught by Madhavan-Park and Madhavan-Park-Kato. Therefore, it is my opinion that claim 96 would have been obvious to a POSA in view of Madhavan-Park and Madhavan-Park-Kato for the same reasons as claim 17. See Section XII.A.24.

26. Dependent Claim 18: "The method of claim 1 wherein part (b) comprises, with the computer system, directing instructions to a profile provider, to an online site, or to an independent ad server to direct the first television advertisement to the set-top box."

295. Claim 18 of the '260 Patent depends from claim 1 and further requires "wherein part (b) comprises, with the computer system, directing instructions to a profile provider, to an online site, or to an independent ad server to direct the first television advertisement to the set-top box." Ex. 1101, claim 18. In other words, while previously discussed claims 17 (*see* Section XII.A.24) and 96 (see Section XII.A.25), require that the computer system is an ad server that directs the television advertisement to the STB, claim 18 requires that the computer system instructs another system to direct the television advertisement to the STB. For example, the claim requires that the computing system instruct one of "a profile provider," "an online site," or "an independent ad server," to direct the television advertisement. As discussed above, claim 1 is taught by Madhavan-Park and Madhavan-Park-Kato.

296. As I discuss above for Element [1B], when the user accesses the content server 100 using a media device 140 that includes a STB, one or more servers of the content server 100 may cause an advertisement stored in the advertising server 105 to be delivered to the media device 140 based on identification information and user event/action data associated with the client machine 130 that was previously stored

to database 200 by the content server 100. Ex. 1162, 7:14-22, 8:34-41, 9:4-8, 9:36-67, Fig. 6. *See* Section XII.A.1.c.

297. Specifically, the processing servers 104 of content server 100 use the identification information (public IP address) of the media device 140 to identify the user's profile and to access respective tables within data storage module 106 (e.g., database 200) to retrieve classification categories related to previously-stored user event/action data for that user and sends that information to advertising servers 105. Ex. 1162, 7:48-53, 8:1-33, 9:9-67, 11:34-61. The advertising servers 105 (the claimed "independent ad server") of the content server 100 access respective tables within advertising storage module 108, which is coupled to advertising servers 105, to retrieve and transmit a television advertisement related to the previously-stored user event/action data and/or content classification categories. Ex. 1162, 4:57-5:2, 8:1-33, 9:9-67, 10:47-67, 11:38-61, Figs. 6-10.

298. For at least these reasons, Madhavan-Park and Madhavan-Park-Kato teach an independent ad server that receives instructions from the computer system to direct the first television advertisement to the set-top box. To the extent that Madhavan-Park and Madhavan-Park-Kato fails to expressly describe an "independent ad server," e.g., that Madhavan's advertising servers 105 are not independent of content server 100, such a relationship between advertising servers 105 and content server 100 would have been obvious to a POSA. That is, a POSA

would have understood there are essentially two predictable choices for an ad server – one that is independent and one that is not independent.

299. Moreover, Madhavan teaches sending targeted advertisements to both its own online sites and to other network-based entities that communicate with web servers 102 to receive targeted advertisements for inclusion in other client online sites that are sent to user devices ("**directing instructions…to an online site…to direct the first television advertisement to the set-top box**"). Ex. 1162, 5:3-36.

300. Accordingly, it is my opinion that the combination of Madhavan-Park and Madhavan-Park-Kato teaches "wherein part (b) comprises, with the computer system, directing instructions to a profile provider, to an online site, or to an independent ad server to direct the first television advertisement to the set-top box," as required by claim 18.

301. Accordingly, as shown above, Madhavan-Park and Madhavan-Park-Kato teach the additional limitations included in dependent claim 18, and renders claim 18 obvious to a POSA.

27. Dependent Claim 97: "The method of claim 61 wherein part (b) comprises, with the computer system, directing instructions to a profile provider, to an online site, or to an independent ad server to direct the first television advertisement to the set-top box."

302. Except for their dependencies, claims 18 and 97 are identical. *See* Ex. 1101, claims 18, 97. Therefore, it is my opinion that claim 97 would have been

obvious to a POSA in view of Madhavan-Park and Madhavan-Park-Kato for the same reasons as claim 18. *See* Section XII.A.26, above.

28. Dependent Claim 21: "The method of claim 1 wherein the computer system causes the first television advertisement to be directed without a request for advertisements originating from the user's set-top box."

303. Claim 21 of the '260 Patent depends from claim 1 and further requires "wherein the computer system causes the first television advertisement to be directed without a request for advertisements originating from the user's set-top box." Ex. 1101, claim 21. As discussed above, claim 1 is taught by Madhavan-Park and Madhavan-Park-Kato. Section XII.A.1.

304. Madhavan-Park and Madhavan-Park-Kato teaches that in response to receiving identification data of media device 140 (via web servers 102 and processing servers 104), advertising servers 105 send an advertisement to media device 140 for presentation. *See* Section XII.A.1.c; *see also,* e.g., Ex. 1162, 7:56-59, 8:26-33, 9:4-8, 9:36-67, 10:41-55, 11:38-61, Fig. 2, Fig. 5 (step 420), Fig. 6 (step 520), Figs. 10-11, Abstract. The advertising servers 105 sends the televisions advertisement without any request or direction from the user or the set-top box to receive or initiate the selection, delivery, or display of the targeted advertisements ("**wherein the computer system causes the first television advertisement to be directed without a request for advertisements originating from the user's set-top box**"). *Id*.

305. Accordingly, it is my opinion that the combination of Madhavan-Park and Madhavan-Park-Kato teaches "wherein the computer system causes the first television advertisement to be directed without a request for advertisements originating from the user's set-top box," as required by claim 21.

306. Accordingly, as shown above, Madhavan-Park and Madhavan-Park-Kato teach the additional limitations in dependent claim 21, and renders claim 21 obvious to a POSA.

29. Dependent Claim 100: "The method of claim 61 wherein the computer system causes the first television advertisement to be directed without a request for advertisements originating from the user's set-top box."

307. Except for their dependencies, claims 100 and 21 are identical. Ex. 1101, claims 21, 100. Therefore, it is my opinion that a POSA would have found claim 100 obvious in view of Madhavan-Park and Madhavan-Park-Kato for the same reasons as claim 21. *See* Section XII.A.28, above.

30. Dependent Claim 22: "The method of claim 1 wherein the online access IP address of each user is an IP address associated with a modem or router used by that user for online access."

308. Claim 22 of the '260 Patent depends from claim 1 and further requires "wherein the online access IP address of each user is an IP address associated with a modem or router used by that user for online access." Ex. 1101, claim 22. As

discussed above, claim 1, from which claim 22 depends, is taught by Madhavan-Park and Madhavan-Park-Kato. *See* Section XII.A.1.

309. As discussed above with reference to claim element[1A], the combined Madhavan-Park system discloses the use of device identification such as a device identifier that would include the combination of: (i) an IP address of a router used to connect to the Internet (e.g., the public IP address of Madhavan-Park's router), which is assigned to a user device, and (ii) a port number associated with the user device, and the combined Madhavan-Park-Kato system discloses the use of device identification such as a device identifier that would include the combination of: (i) an IP address of a router used to connect to the Internet (e.g., the public IP address of Madhavan-Park's router), which is assigned to a user device, and (ii) a MAC address associated with the user device. *See* Section XII.A.1.b; Ex. 1163, ¶¶ [0009]-[0016], [0029]-[0030]. Thus, each client machine 130 would have the public IP address of Madhavan-Park's router (**"wherein the online access IP address of each user is an IP address associated with a modem or router used by that user for online access"**).

310. Therefore, it is my opinion that Madhavan-Park and Madhavan-Park-Kato teaches "wherein the online access IP address of each user is an IP address associated with a modem or router used by that user for online access," as required by claim 22.

311. Accordingly, as shown above, Madhavan-Park and Madhavan-Park-Kato teach the additional limitations included in dependent claim 22, and renders claim 22 obvious to a POSA.

31. Dependent Claim 101: "The method of claim 61 wherein the online access IP address of each user is an IP address associated with a modem or router used by that user for online access."

312. Except for their dependencies, claims 102 and 22 are identical. *See* Ex. 1101, claims 22, 102. Therefore, it is my opinion that a POSA would have found claim 101 obvious in view of Madhavan-Park and Madhavan-Park-Kato for the same reasons as claim 22. *See* Section XII.A.30, above.

32. Dependent Claim 44: "The method of claim 1 wherein the first online access IP address and the common IP address are the same."

313. Claim 44 of the '260 Patent depends from claim 1 and further requires "wherein the first online access IP address and the common IP address are the same." Ex. 1101, claim 44. As discussed above, claim 1, from which claim 44 depends, is taught by Madhavan-Park or Madhavan-Park-Kato. *See* Section XII.A.1.

314. Park describes assigning a private IP address to each device in a network (including a user's computer) using an IP sharing router having a public IP address (the claimed "**common IP address**"), as I discussed above with regard to claim element [1A]. Section XII.A.1.b; Ex. 1163, ¶¶ [0009]-[0011]. More specifically, Park describes that "[a]n Internet Service Provider (ISP) assigns a

public IP address to the IP sharing router 110, and the IP sharing router 110 assigns a private IP address to each of products [SIC] constituting the home network." Ex. 1163, ¶ [0009]. Park further describes that a device "should use the public IP address . . . that is assigned to the IP sharing router 210," in the event that "desires to transmit data to an external device through the Internet." Ex. 1163, ¶¶ [0009]-[0011], [0038]. Thus, in at least some examples, the public IP address of the sharing router is used by the user's computer to access the Internet ("**first online access IP address**"). *Id*. For example, Park describes that "[a] private IP address cannot be used on the Internet and is only available on the internal network." Ex. 1163, ¶ [0010]. Thus, a POSA would recognize that if a device has been assigned a private IP address, this private IP address would be replaced by the public IP address of Park's sharing router as transmissions pass between the user device and the Internet via the IP sharing router. Ex. 1163, ¶¶ [0009]-[0011], [0038].

315. Therefore, it is my opinion that Madhavan-Park or Madhavan-Park-Kato teaches "wherein the first online access IP address and the common IP address are the same," as required by claim 44.

316. Accordingly, as shown above, Madhavan-Park or Madhavan-Park-Kato teach the additional limitations included in dependent claim 44, and renders claim 44 obvious to a POSA.

33. Dependent Claim 62

317. Except for its dependency, claim 62 is identical to claim 44. Ex. 1101, claims 44, 62. Therefore, it is my opinion that a POSA would have found claim 62 obvious in view of Madhavan-Park or Madhavan-Park-Kato for the same reasons as claim 44. *See* Section XII.A.32, above.

34. Dependent Claim 45: "The method of claim 1 wherein the first online access IP address and the common IP address differ."

318. Claim 45 of the '260 Patent depends from claim 1 and further requires "wherein the first online access IP address and the common IP address differ." Ex. 1101, claim 45. As discussed above, claim 1 is taught by Madhavan-Park and Madhavan-Park-Kato. *See* Section XII.A.1.

319. Recording IP addresses, MAC addresses, and/or other device identifiers for a user profile during various Internet sessions of a user device is taught by Madhavan-Park-Kato, as I discussed above for claim element [1A]. Section XII.A.1.b; Ex. 1164, ¶¶ [0031]-[0041]. More specifically, Kato describes acquiring "first communication information indicating a correspondence of the physical port, the MAC address and the device identification information from the intelligent hubs," "second communication information indicating a correspondence of the MAC address and the private IP address from the routers," and "third communication information indicating a correspondence of the private IP address and, the global IP address from the routers." Ex. 1164, ¶ [0040]. In Kato, using this

information, "the user identification device 22 identifies the user of a user terminal communicating via the physical port detected by the port detector 110." Ex. 1164, ¶ [0041]. Madhavan also discloses that user profile information includes "geographic data detailing user access locations." Ex. 1162, 5:53-6:2.

320. A POSA would understand that a user device accessing the system from different geographic locations could also be accessing the system via different IP addresses. For example, the user device may access the Madhavan-Park-Kato system from the "**common IP address**," which is also being used by the STB. At a later time, the user device may access the Madhavan-Park-Kato system from a different location, and thus from a different IP address (the claimed "**first online access IP address**"). In this case, the Madhavan-Park-Kato system would still be able to recognize the user device and correlate the device and any online activity with the user profile based on the device's MAC address. Ex. 1164, ¶¶ [0031], [0034], [0040]-[0041], [0049]-[0051]. Therefore, it is my opinion that Madhavan-Park-Kato teaches "wherein the first online access IP address and the common IP address differ," as required by claim 45.

321. Accordingly, as shown above, Madhavan-Park-Kato teaches the additional limitations included in dependent claim 45, and renders claim 45 obvious to a POSA.

35. Dependent Claim 63

322. Except for its dependency, claim 63 is identical to claim 45. Ex. 1101, claims 45, 63. Therefore, it is my opinion that a POSA would have found claim 63 obvious in view of Madhavan-Park-Kato for the same reasons as claim 45. *See* Section XII.A.34, above.

36. Dependent Claim 46: "The method of claim 45 wherein the first online access IP address and the set-top box IP address are associated based on online access by the first user's online user interface device via a second online access IP address."

323. Claim 46 of the '260 Patent depends from claims 1 and 45 and further requires "wherein the first online access IP address and the set-top box IP address are associated based on online access by the first user's online user interface device via a second online access IP address." Ex. 1101, claim 46. As discussed above, claims 1 and 45 are taught by Madhavan-Park-Kato. *See* Sections XII.A.1, XII.A.34.

324. As I discussed above for claim element [1A], Madhavan-Park and Madhavan-Park-Kato teaches electronically associating IP addresses of user devices (e.g., client machine 130 and media device 140) based on a common IP address. *See* Section XII.A.1.b; Ex. 1163, ¶¶ [0003], [0007]-[0012], [0029]-[0030], [0035]-[0036], [0038]; Ex. 1162, 1:46-54, 3:55-63, 4:37-43, 5:3-11, 5:28-36, 5:48-6:12, 7:14-26, 7:33-42, 7:60-67, 8:44-48, 9:18-25, Figs. 1-2. And as I discussed for claim 45, Madhavan-Park-Kato also teaches "the first online access IP address and the

common IP address differ." *See* Section XII.A.34. For example, these IP addresses may each correspond to a device accessing the system from different geographic locations, as is discussed for claim 45. *Id*. As noted above, claim 46 further requires "the first online access IP address and the set-top box IP address are associated based on online access by the first user's online user interface device via a second online access IP address." Ex. 1101, claim 46. These additional requirements are taught by Madhavan-Park-Kato for similar reasons to those I discussed above in claim 45. *See* Section XII.A.34.

325. As discussed for claim 45, Madhavan-Park-Kato's system recognizes a user interface device accessing the system from a "**first online access IP address**," which is different from "**the common IP address**," e.g., at a different location, by recognizing the device's MAC address. Section XII.A.34; Ex. 1162, 5:59-66; Ex. 1164, ¶¶ [0031], [0034], [0038], [0040]-[0041], [0049]-[0051]. A POSA would have understood that after a user interface device accesses Madhavan-Park-Kato's system from a first location, and the device later accesses the system from "**the common IP address**" (the claimed "**second online access IP address**") that the set-top box was also connected to (the claimed "**set-top box IP address**"), the system would recognize the device by its MAC address. Ex. 1164, ¶¶ [0031], [0034], [0040]-[0041], [0049]-[0051].

326. As Madhavan describes maintaining a database of user profile information that includes, among other things, access location data, a POSA would have understood that the database would have included data from different intervals, including before an IP sharing router is set up to associate the client machine 130 and the media device 140. Ex. 1162, 5:53-66. In such an example, the client machine 130 may first access the internet at a first location via a "**first online access IP address**" and then again at Madhavan-Park-Kato's home network through the IP sharing router with the common IP address, "**a second online access IP address**." At Madhavan-Park-Kato's home network, for the same reasons discussed in [1A], the second online access IP address would be associated with set-top box IP address. Once this association occurs, the first online access IP address would also be associated with the set-top box IP address because this association would be tied to the same profile information that also recorded the first online access IP address. Thus, "**the first online access IP address**" of Madhavan's client machine 130 accessing the internet at a first location and "**the set-top box IP address**" of Madhavan's media device 140 in Madhavan-Park-Kato's home network "**are associated based on online access by the first user's online user interface device via a second online access IP address**" when the client machine later accesses Madhavan-Park-Kato's home network and Park's IP installer sets up a home network with devices that share the common IP address.

327. Access information from these two sessions (including the first IP address and the second IP address) is used to derive user profile information (e.g., which may correspond to common user profile of the user). Thus, because Madhavan-Park-Kato's system would have associated the "**second online access IP address**" (*i.e.*, "**common IP address**") with the "**first online access IP address**" based on the MAC address of the user interface device, the "**first online access IP address**" would have also been associated with the "**[STB] IP address**" based on the "**second online access IP address**" (*i.e.*, "**common IP address**"). By electronically associating both the first and second IP addresses with a particular user's profile, the system is capable of compiling a more thorough user profile, collecting profile data from various access locations. Similarly, by associating both the first and second IP addresses with this particular user's profile, the system may store other access information associated with the first and second IP addresses within the user profile (*e.g.*, access information corresponding to sessions affiliated with both IP addresses). As described above, doing so would provide a more complete and accurate collection of profile information for selecting and providing targeting advertisements. Section XII.A.34; Ex. 1162, 3:9-38, 5:53-66, 6:3-8, 8:1-8, 8:42-56, Fig. 6; Ex. 1164, ¶¶ [0031]-[0038], [0040]-[0041], [0049]-[0051].

328. Accordingly, just as the system of Madhavan-Park-Kato teaches "**the first online access IP address**" and "**the common IP address**" of claim 45, the

system of Madhavan-Park-Kato teaches "**the second online access IP address**," of claim 46. Simply put, the common IP address of the IP sharing router teaches both the claimed "**common IP address**," as recited in claim 45 and the claimed "**second online access IP address**," in claim 46, as there is no requirement that these IP addresses be different from each other. Thus, by teaching online access via the common IP address of Park's IP sharing router, the system of Madhavan-Park and Madhavan-Park-Kato teaches online access via the "**second online access IP address**," as recited in claim 46.

329. Therefore, it is my opinion that Madhavan-Park-Kato teaches "wherein the first online access IP address and the set-top box IP address are associated based on online access by the first user's online user interface device via a second online access IP address," as required by claim 46.

330. Accordingly, as shown above, Madhavan-Park-Kato teaches the additional limitations included in dependent claim 46, and renders claim 46 obvious to a POSA.

37. Dependent Claim 64

331. Except for their dependencies and the change from "**first online access IP address/set-top box IP address**" to "**online user interface device identifier/set-top box identifier**," claim 64 is identical to claim 46. See Ex. 1101, claims 46, 64. It is my opinion that my analysis for claim 46 is applicable to claim 64. Therefore,

it is my opinion that a POSA would have found claim 64 obvious in view of Madhavan-Park-Kato for the same reasons as claim 46. *See* Section XII.A.36, above.

38. Dependent Claim 47: "The method of claim 46 wherein the second online access IP address and the common IP address are the same."

332. Claim 47 of the '260 Patent depends from claims 1 and 46 and further requires "wherein the second online access IP address and the common IP address are the same." Ex. 1101, claim 47. As discussed above, claim 46 is taught by Madhavan-Park-Kato. *See* Section XII.A.36.

333. The second online access IP address is the common IP address, as I described above with regard to claim 46. Section XII.A.36. For example, the IP address used by the user's computer to access the Internet ("second online access IP address") is, in at least some examples, the same as the public IP address of the IP sharing router. Ex. 1163, ¶¶ [0009]-[0011], [0038].

334. Therefore, it is my opinion that Madhavan-Park-Kato teaches "wherein the second online access IP address and the common IP address are the same," as required by claim 47.

335. Accordingly, as shown above, Madhavan-Park-Kato teaches the additional limitations included in dependent claim 47, and renders claim 47 obvious to a POSA.

39. Dependent Claim 65

336. Except for its dependency, claim 65 is identical to claim 47. Ex. 1101, claims 47, 65. Therefore, it is my opinion that a POSA would have found claims 65 to be obvious in view of Madhavan-Park-Kato for the same reasons as claim 47. *See* Section XII.A.38, above.

40. Dependent Claim 48: "The method of claim 45 wherein the first online access IP address and the set-top box IP address are associated based on a correlation between the common IP address and an online user interface device identifier that indicates the user's online user interface device."

337. Claim 48 of the '260 Patent depends from claim 45 and further requires "wherein the first online access IP address and the set-top box IP address are associated based on a correlation between the common IP address and an online user interface device identifier that indicates the user's online user interface device." Ex. 1101, claim 48. As discussed above, claim 45, from which claim 48 depends, is taught by and Madhavan-Park-Kato. *See* Section XII.A.34.

338. As I discussed above for claim 45, Madhavan-Park-Kato teaches the first online access IP address and the set-top box IP address being associated based on online access by the online user interface device via a second online access IP address. *See* Section XII.A.34; Ex. 1162, 5:53-66; Ex. 1164, ¶¶ [0031], [0034], [0038], [0040]-[0041], [0049]-[0051]. Madhavan-Park-Kato's system would have associated "**the first online access IP address**" with the "**second online access IP**

address" or "**the common IP address**" based on the MAC address of the user interface device ("**an online user interface device identifier that indicates the user's online user interface device**"). Because the "**common IP address**" is the same as the "**set-top box IP address**," the "**first online access IP address**" would have also been associated with the "**set-top box IP address**" based on the "**correlation between the common IP address**" and the MAC address of the user interface device. *See* Sections XII.A.34, XII.A.1.b.

339. It would have been obvious to a POSA that the user profile information that tracks user activity across various locations and IP addresses, that the database of profile information includes a record of activity over different locations as well as information relating to which location a particular device has accessed. Ex. 1162, 3:1-8, 5:37-6:12, 7:33-36, 8:9-25, 8:42-48, 10:3-25, 10:35-40, 10:67-11:6, 11:30-37, Figs. 5-9. For a given user device, this user profile information includes a device identifier ("**an online user interface device identifier that indicates the user's online user interface device**"). *Id*. The user profile for the given device further includes the IP addresses of other locations accessed by that user device. *Id*. For example, such locations would include an initial access location ("**the first online access IP address**") and a subsequent access at the locations that uses the IP sharing router ("**set-top box IP address**"/"**the common IP address**"). *Id*. Thus, by including the IP addresses of both access locations in the user profile, the user profile

information associates "**the first online access IP address and the set-top box IP address**." *Id*. A POSA would recognize that a user profile that includes such information teaches "**a correlation between the common IP address and an online user interface device identifier that indicates the user's online user interface device**." *Id*.

340. Therefore, it is my opinion that Madhavan-Park-Kato teaches "wherein the first online access IP address and the set-top box IP address are associated based on a correlation between the common IP address and an online user interface device identifier that indicates the user's online user interface device," as required by claim 48.

341. Accordingly, as shown above, Madhavan-Park-Kato teaches the additional limitations included in dependent claim 48, and renders claim 48 obvious to a POSA.

41. Dependent Claim 52: "The method of claim 1 wherein the set-top box is further indicated by a set-top box identifier that includes a device MAC address or a portion thereof."

342. Claim 52 of the '260 Patent depends from claim 1 and further requires "wherein the set-top box is further indicated by a set-top box identifier that includes a device MAC address or a portion thereof." Ex. 1101, claim 52. As discussed above, claim 1 is taught by Madhavan-Park, and Madhavan-Park-Kato. *See* Section XII.A.1.

343. As I have previously explained above at Sections XII.A.1.b-c with respect to claim 1, Kato discloses associating devices with a common IP address using device identifiers other than an IP address, including MAC addresses. Section XII.A.1.b; Ex. 1164, Abstract, ¶¶ [0006]-[0013], [0018]-[0019], [0030]-[0036], [0038]-[0046], [0049]-[0057], [0063]-[0070]. For example, Kato discloses a user identification device 22 configured collects user terminal information, including "a MAC address which is terminal identification information of each user terminal." Ex. 1164, ¶ [0033]; *see also* Ex. 1164, ¶¶ [0030]-[0036], [0040]-[0046]. Therefore, in the combined system and as I discussed in further detail above at Sections XII.A.1.b-c with respect to claim 1, a set-top box would be identified by a MAC address (or, a portion thereof).

344. It is therefore my opinion that the combination of Madhavan-Park-Kato teaches "wherein the set-top box is further indicated by a set-top box identifier that includes a device MAC address or a portion thereof," as required by claim 52.

42. Dependent Claim 68

345. Except for their dependencies, claims 52 and 68 are nearly identical but for inconsequential wording changes. See Ex. 1101, claims 52, 68. Therefore, it is my opinion that a POSA would have found claim 68 obvious in view of Madhavan-Park-Kato for the same reasons as claim 52. *See* Section XII.A.41, above.

43. Dependent Claim 54: "The method of claim 1 wherein the common IP address is determined by the computer system by matching the first online access IP address with a set-top box IP address used by a uniquely identified set-top box both before and after the online activity occurs."

346. Claim 54 of the '260 Patent depends from claim 1 and further requires "wherein the common IP address is determined by the computer system by matching the first online access IP address with a set-top box IP address used by a uniquely identified set-top box both before and after the online activity occurs." Ex. 1101, claim 54. As discussed above, claim 1, from which claim 54 depends is taught by Madhavan-Park and Madhavan-Park-Kato. *See* Section XII.A.1.

347. In the combined systems of Madhavan-Park and Madhavan-Park-Kato, a unique port number and/or MAC address are used to identify a STB. Section XII.A.1.b; Ex. 1164, ¶¶ [0006], [0009]-[0011], [0031]-[0036], [0038]-[0046], [0049]-[0057], [0063]-[0070]. This system also teaches "associating an online access IP address of the user and a set-top box IP address of that user based on a common IP address." *Id*. In addition, because devices associated with the "first online access IP address" and "set-top box IP address" are both connected to the IP sharing router (and thus share the same IP address), the "first online access IP address" and "set-top box IP address" can both be the same as the "common IP address. Section XII.A.1.b; Ex. 1164, ¶¶ [0006], [0009]-[0011], [0031]-[0036], [0038]-[0046], [0049]-[0057], [0063]-[0070]; Ex. 1163 ¶¶, [0009]-[0016], [0029]-

[0030], [0038]. Thus, in my opinion, it would be obvious to a POSA that, both before and after the online user interface device connects to the IP sharing router (claimed "a uniquely identified set-top box both before and after the online activity occurs"), the STB could be connected to and use the same common IP address of the IP sharing router.

348. Madhavan-Park and Madhavan-Park-Kato also teaches identifying whether or not there is still a connection of the set-top box to the common IP address. For example, the systems of Madhavan-Park and Madhavan-Park-Kato would need to identify whether the set-top box is connected to the common IP address, for the purpose of identifying whether or not advertisements may be successfully transmitted to the set-top box, or if instead such transmission would fail. For example, targeting advertisements to a user's set-top box based on activity of the user at another device is taught by Madhavan-Park and Madhavan-Park-Kato, as I described above. *See* Sections XII.A.1.b-c. More specifically, because the "first online access IP address" and the "[set-top box] IP address share a "common IP address," this "common IP address" may be used to match these IP addresses and other device identifiers accordingly. For example, a combination of the common IP address, the port number, and MAC address of the set-top box would be used to identify the set-top box. Furthermore, targeting of specific advertisements would be performed using this identifier. *See* Sections XII.A.1.b-c. As a result, where a

different device is used to perform online activity, this "common IP address" (the claimed "first online access address") is used to target advertisements to the set-top box. In doing so, it is my opinion that it would be obvious to a POSA for Madhavan-Park and Madhavan-Park-Kato's systems to verify, using the set-top box's unique identifier, that the set-top IP address matches the "common IP address" (e.g., the "common IP address" used prior to the user's online activity). Ex. 1162, 7:60-67, 8:42-48, 10:35-40, 10:67-11:6, 11:32-37, Figs. 9-10. In doing so, any transmission failures in delivery of the advertisement would be prevented. *Id*. For example, the previously known common IP address may be used to accurately identify the port number, MAC address, and/or other identification information used to successfully delivery the advertisement.

349. On the other hand, misdirection of the targeted advertisement and/or other communications may occur where the set-top box IP address does not match the previously known common IP address. For example, the targeted advertisement would be delivered to an improper recipient, the destination of the targeted advertisement may be indeterminate, and/or other transmission errors would occur, thus resulting in a failed delivery of the targeted advertisement. Therefore, it is my opinion that Madhavan-Park and Madhavan-Park-Kato teaches "wherein the common IP address is determined by the computer system by matching the first online access IP address with a set-top box IP address used by a uniquely identified

set-top box both before and after the online activity occurs," as required by claim 54.

350. Accordingly, as shown above, Madhavan-Park and Madhavan-Park-Kato teach the additional limitations included in dependent claim 54, and renders claim 54 obvious to a POSA.

44. Dependent Claim 75

351. Except for its dependency and inconsequential wording changes, claim 75 is nearly identical to claim 54 . See Ex. 1101, claims 54, 75. Therefore, it is my opinion that a POSA would have found claim 75 obvious in view of Madhavan-Park and Madhavan-Park-Kato for the same reasons as claim 54. *See* Section XII.A.43, above.

45. Dependent Claim 55: "The method of claim 1 wherein the first online access IP address and the set-top box IP address are associated before the online activity occurs."

352. Claim 55 of the '260 Patent depends from claim 1 and further requires "wherein the first online access IP address and the set-top box IP address are associated before the online activity occurs." Ex. 1101, claim 55. As discussed above, claim 1, from which claim 55 depends is taught by Madhavan-Park and Madhavan-Park-Kato. *See* Section XII.A.1.

353. As I explained above for claim element [1A], in the Madhavan-Park and Madhavan-Park-Kato systems, the device identifiers (IP addresses and port

number/MAC address) of client machine 130 and media device 140 are associated because both devices obtain online access to content server 100 via the same common IP address of Park's shared IP router, and further because content server 100 associates both device identifiers to user 110 via the user profile. Section XII.A.1.b; Ex. 1163, ¶¶ [0036], [0038]. In the underlying combinations, the processing servers 104 of content server 100 (the claimed **"computer system"**) identify associations among the identification information of multiple electronic devices, including client machine 130 and media device 140, based on their use of the **"common IP address,"** which is the IP address of the shared router (e.g., Park's router 110/210) used to connect client machine 130 and media device 140 to the Internet. Section XII.A.1.b. Consider, for example, after the user connects to the content server 100 using client machine 130 and media device 140 via the IP sharing router thereby associating the user devices, the content service provider continues to receive action/event data (e.g., data associated with each respective event or action performed by the user while accessing the Internet using client machine 130). Ex. 1162, 3:1-8, 5:37-6:12, 7:15-55, 7:60-8:25, 8:34-67, 10:3-25, 10:35-46, 10:65-11:40, Figs. 5-10.

354. Identification information and the corresponding event/action data will be stored by processing servers 104 of the content service provide 100 to database 200 and linked to the user's profile based on the identification information. *See* e.g.,

Ex. 1162, 1:36-2:3, 3:52-4:13, 5:37-6:12, 7:7-53, 7:60-8:15, 8:42-57, 9:9-40, 10:1-25, Figs. 5-7. In my opinion, a POSA would have understood that the identification information (IP address) for a user's devices, such as client machine 130 and media device 140, would be associated with the user's profile as well as each other, and that Madhavan's content server 100 receives action/event data on an ongoing basis, including after associating the "online access IP address" (the IP address of Madhavan's client machine 130) and "set-top box IP address" (the IP address of Madhavan's media device 140). Ex. 1162, 7:27-8:25, 8:34-9:6, 9:30-67, 11:27-61, Figs. 5-7. Accordingly, in at least these examples, the online activity occurs after the association.

355. Therefore, it is my opinion that Madhavan-Park and Madhavan-Park-Kato teaches "wherein the first online access IP address and the set-top box IP address are associated before the online activity occurs," as required by claim 55.

356. Accordingly, as shown above, Madhavan-Park and Madhavan-Park-Kato teach the additional limitations included in dependent claim 55, and renders claim 55 obvious to a POSA.

46. Dependent Claim 76

357. Except for their dependencies, claims 55 and 76 are nearly identical, except for the change from "first online access IP address/set-top box IP address" to "online user interface device identifier/set-top box identifier." See Ex. 1101, claims

55, 76. Therefore, it is my opinion that a POSA would have found claim 76 obvious in view of Madhavan-Park and Madhavan-Park-Kato for the same reasons as claim 55. *See* Section XII.A.45, above.

47. Dependent Claim 56: "The method of claim 1 wherein the first online access IP address and the set-top box IP address are not associated until after the online activity occurs."

358. Claim 56 of the '260 Patent depends from claim 1 and further requires "wherein the first online access IP address and the set-top box IP address are not associated until after the online activity occurs." Ex. 1101, claim 56. As discussed above, claim 1, from which claim 56 depends is taught by Madhavan-Park and Madhavan-Park-Kato. *See* Section XII.A.1.

359. As I explained above for limitation [1A] and for claim 56, in the Madhavan-Park and Madhavan-Park-Kato systems, IP addresses are associated because multiple devices (e.g., client machine 130 and media device 140) obtain online access to content server 100 via the same public IP address of Park's IP sharing router, and further because processing servers 104 of content server 100 associates both device identifiers to user 110 via the user profile. Sections XII.A.1.b, XII.A.47; Ex. 1162, 3:1-8, 5:37-6:12, 7:15-55, 7:60-8:25, 8:34-67, 10:3-25, 10:35-46, 10:65-11:40, Figs. 5-10; Ex. 1163, ¶¶ [0036], [0038].

360. In one example, when a user first connects to Madhavan's content server 100 from the client device 130 (and before the content server 100 has

associated the client device 130 with any other device, such as media device 140), event/action data (the claimed **"online activity"**) that previously occurred and is stored locally on client device 130 and/or that occurs during that session, is sent and added to the user's profile on content server 100. Ex. 1162, 8:34-48. Thereafter, when the media device 140 accesses the content server 100 via the IP sharing router for the first time, media device 140 would send identification data (including the IP address of Park's IP sharing router) to content server 100, and processing servers 104 of the content server 100 stores the common IP address being used, thereby associating the IP addresses of client device 130 and media device 140. Given that online activity has already occurred on client device 130, the first online access and STB IP addresses "**are not associated until after the online activity occurs.**"

361. Therefore, it is my opinion that Madhavan-Park and Madhavan-Park-Kato teaches "wherein the first online access IP address and the set-top box IP address are not associated until after the online activity occurs," as required by claim 56.

362. Accordingly, as shown above, Madhavan-Park and Madhavan-Park-Kato teach the additional limitations included in dependent claim 56, and renders claim 56 obvious to a POSA.

48. Dependent Claim 77

363. Except for their dependencies, claims 56 and 77 are nearly identical, except for the change from "first online access IP address/set-top box IP address" to "online user interface device identifier/set-top box identifier". *See* Ex. 1101, claims 56, 77. Therefore, it is my opinion that a POSA would have found claim 77 obvious in view of Madhavan-Park and Madhavan-Park-Kato for the same reasons as claim 56. *See* Section XII.A.47, above.

49. Dependent Claim 57: "The method of claim 1 further comprising, with the computer system, automatically deriving the user profile information from the online activity performed from the first online access IP address."

364. Claim 57 of the '260 Patent depends from claim 1 and further requires "with the computer system, automatically deriving the user profile information from the online activity performed from the first online access IP address." Ex. 1101, claim 57. As discussed above, claim 1 is taught by Madhavan-Park and Madhavan-Park-Kato. *See* Section XII.A.1.

365. As I discussed above for element[1B], Madhavan-Park and Madhavan-Park-Kato discloses using the user's online activity performed from the first online access IP address (*i.e.,* the public IP address of client device 130) to derive content classification categories, and storing user profile information including the identification information, online activity, and the content classification categories. Ex. 1162, 1:38-46, 2:62-3:55, 3:1-55, 5:37-6:50, 8:34-67, 10:65-11:11, 11:18-37,

Figs. 6, 9-10; *See* Section XII.A.1.c. This is done automatically because processing servers 104 of content server 100 automatically tracks and stores the data regarding the online activity to the user's profile based on the programming of its servers and without the user having to request it. *See* Section XII.A.1.c; *see also,* e.g., Ex. 1162, 1:38-46, 2:62-3:55, 5:53-6:50, 8:63-67, 11:18-22, 11:27-37, Figs. 3, 6 (step 510), 9 (steps 820 and 830), 10. More specifically, without receiving a request from the user, Madhavan describes establishing user tables that contain records for various user, such as the user profiles, and updating these records accordingly. *Id*.

366. Accordingly, as shown above, Madhavan-Park and Madhavan-Park-Kato teach the additional limitations included in dependent claim 57, and render claim 57 obvious to a POSA.

50. Dependent Claim 78

367. Except for their dependencies, claims 57, 78, 119, and 144 are identical. *See* Ex. 1101, claims 57, 78, 119, 144. Thus, it is my opinion that a POSA would have found claims 78, 119, and 144 obvious in view of Madhavan-Park and Madhavan-Park-Kato for the same reasons as claim 57. *See* Section XII.A.49, above.

51. Dependent Claim 58: "The method of claim 1 further comprising, with the computer system, automatically selecting the first television advertisement based on the user profile information."

368. Claim 58 of the '260 Patent depends from claim 1 and further requires "with the computer system, automatically selecting the first television advertisement based on the user profile information." Ex. 1101, claim 58. As discussed above, claim 1 is taught by Madhavan-Park and Madhavan-Park-Kato. *See* Section XII.A.1.

369. As I discussed above for element [1B], Madhavan teaches automatically causing advertisements to be delivered based on user profile information. *See* Section XII.A.1.c, above; Ex. 1162, Abstract , 7:56-59, 8:26-33, 9:4-8, Fig. 5 (step 420), Fig. 6 (step 520). In particular, Madhavan explains that user actions and event information (i.e., user profile information) are automatically collected or captured by processing servers 104 of a content server 100 and used, along with derived content classification categories, for advertisement selection. Ex. 1162, 1:36-43, 2:62-67, 5:48-6:19, 7:33-42, 8:42-9:3. The selected advertisement is then transmitted to the user's media device 140 (e.g., a set-top box). Ex. 1162, 8:34-9:67, 11:44-61, Fig. 2. Because the advertisements are selected and transmitted by advertising servers 105 of content server 100 based on receiving the user identification information from the media device 140 via processing servers 104 and web servers 102, the receipt of the user identification information teaches an automatic trigger for the advertisement selection and transmission. *See* Ex. 1162,

8:34-9:67, 11:44-61, Fig. 2. More specifically, it is my opinion that Madhavan teaches the processing elements of content server 100 being pre-programmed to select and send targeted advertisements responsive to receiving the user identification information. The ’260 Patent requires nothing more for the term “automatically selecting.” For example, the ’260 Patent describes that television advertisements are selected using user profile information derived from online activity and automatically directed to a set-top box. Ex. 1101, 8:54-9:8; *see* also Ex. 1101, 20:26-40 (describing an STB sending a query for an STB), 11:36-12:3 (describing automatic transmission of information to an advertising server simply based on being “pre-programmed” to do so). This is the same process as described in Madhavan where the user identification information is one piece of user profile information received by the pre-programmed processing elements of content server 100, and which triggers the content server 100’s programmed processing elements to select and transmit an advertisement to media device 140. Ex. 1162, 1:36-43, 2:62-67, 5:48-6:19, 7:33-42, 8:34-9:67, 11:44-61, Fig. 2

370. Accordingly, it is my opinion that Madhavan (and thus Madhavan-Park and Madhavan-Park-Kato) teaches “automatically selecting the first television advertisement based on the user profile information,” as required by claim 58.

52. Dependent Claim 79: "The method of claim 61 further comprising automatically selecting the first television advertisement based on the user profile information."

371. Except for their dependencies and inconsequential wording changes, claims 58 and 79 are identical. See Ex. 1101, claims 58, 79. Therefore, it is my opinion that a POSA would have found claim 79 obvious in view of Madhavan-Park and Madhavan-Park-Kato for the same reasons as claim 58. *See* Section XII.A.51, above.

53. Dependent Claim 59: "The method of claim 1 wherein: (i) the computer system is under control of an entity that operates independently of a provider of television service to each of the multitude of users through the corresponding set-top box; and (ii) the computer system causes the first television advertisement to be directed in part (b) without transmitting user online behavioral profile information to the provider of television service.

372. Claim 59 of the '260 Patent depends from claim 1 and further requires "wherein: (i) the computer system is under control of an entity that operates independently of a provider of television service to each of the multitude of users through the corresponding set-top box; and (ii) the computer system causes the first television advertisement to be directed in part (b) without transmitting user online behavioral profile information to the provider of television service." Ex. 1101, claim 59. As discussed above, claim 1 is taught by Madhavan-Park and Madhavan-Park-Kato. *See* Section XII.A.1.

373. Madhavan's content server 100 may be accessed by "other network entities," such as "broadcast television entities [**"a provider of television service"**]…which broadcast television programs to the user entities 110." Ex. 1162, 5:18-27. Because broadcast television entities are external and separate from content server 100, it is my opinion that Madhavan teaches that content server 100 is controlled by **"an entity that operates independently of a provider of television service to each of the multitude of users through the corresponding set-top box."** Ex. 1162,4:43-56, 5:18-27.

374. As I discuss above for element [1B], when the user accesses the content server 100 using a media device 140 that includes a STB, one or more servers of the content server 100 may cause delivery of targeted television advertisements to media device 140 based on identification information, user event/action data, and content classification categories associated with the client machine 130 that was previously stored to database 200 by processing servers 104 of the content server 100. *See* Section XII.A.1.c.; Ex. 1162, 7:14-22, 8:34-41, 9:4-8, 9:36-67, Figs. 2, 5-6. Specifically, the processing servers 104 of content server 100 use the identification information (a device identifier such as an IP address) of the media device 140 to identify the user's profile and to access respective tables within data storage module 106 (e.g., database 200) to retrieve classification categories related to previously-stored user event/action data for that user and sends that information to advertising

servers 105. Ex. 1162, 7:48-55, 8:9-33, 9:36-67, 11:34-61. The advertising servers 105 of the content server 100 access respective tables within advertising storage module 108, which is coupled to advertising servers 105, to retrieve and transmit a television advertisement related to the previously-stored user event/action data and/or content classification categories. Ex. 1162, 4:57-5:2, 8:16-33, 9:36-67, 10:47-67, 11:38-61, Fig. 6-10.

375. Madhavan does not send or receive, during the advertisement selection and transmission process, any information, much less user profile behavioral information, to or from these "broadcast television entities." *See* Section XII.A.1. The user profile information is stored in data storage module 106 and the advertisements are stored in advertising storage modules 108. Ex. 1162, 4:57-5:2, 5:18-27, 6:20-7:6, 8:9-33, 9:36-67, 10:15-67, 11:27-61. The advertisements are sent to the user devices from advertising storage modules 108. *Id.* Thus, Madhavan's targeting advertisement process does not send or receive any user profile information to or from the "broadcast television entities" (**"provider of television service"**) *See* Sections XII.A.1.b-c. Accordingly, Madhavan describes directing the advertisement **"without transmitting user online behavior profile information to the provider of the television service."**

376. Accordingly, Madhavan-Park and Madhavan-Park-Kato teaches that "the computer system is [under control of/controlled by] an entity that operates

independently of a provider of television service to each of the multitude of users through the corresponding set-top box" and that the first television advertisement is directed "without transmitting [or causing to be transmitted] user online behavioral profile information to the provider of television service."

377. Therefore, it is my opinion that Madhavan-Park and Madhavan-Park-Kato teaches "wherein: (i) the computer system is under control of an entity that operates independently of a provider of television service to each of the multitude of users through the corresponding set-top box; and (ii) the computer system causes the first television advertisement to be directed in part (b) without transmitting user online behavioral profile information to the provider of television service," as required by claim 59.

378. Accordingly, as shown above, Madhavan-Park and Madhavan-Park-Kato teach the additional limitations included in dependent claim 59, and renders claim 59 obvious to a POSA.

54. Dependent Claim 81

379. Except for their dependencies and some insubstantial wording changes, claims 59 and 81 are identical. Ex. 1101, claims 59, 81. It is my opinion that my analysis for claim 59 is applicable to these claims. Therefore, it is my opinion that claim 81would have been obvious to a POSA in view of Madhavan-Park and

Madhavan-Park-Kato for the same reasons as claim 59. *See* Section XII.A.53, above.

55. Dependent Claim 60: "The method of claim 59 wherein the online access and set-top box IP addresses are associated in part (a), and the first television advertisement is caused to be directed in part (b), without receiving personally identifiable information from the provider of television service."

380. Claim 60 of the '260 Patent depends from claim 1 and further requires "wherein the online access and set-top box IP addresses are associated in part (a), and the first television advertisement is caused to be directed in part (b), without receiving personally identifiable information from the provider of television service." Ex. 1101, claim 60. As discussed above, claim 59, is taught by Madhavan-Park and Madhavan-Park-Kato. *See* Section XII.A.53.

381. Madhavan's content server 100 may be accessed by "other network entities," such as "broadcast television entities [**"a provider of television service"**]…which broadcast television programs to the user entities 110." Ex. 1162, 5:17-27. As described above for element[1A], the device identifiers being associated (i.e., common IP address and port numbers/MAC addresses) cannot be used, by themselves, to identify any specific person, and thus do not constitute "personally identifiable information" as this term is used in the '260 Patent. *See* Sections XII.A.1.b, XII.A.3. As further discussed above for element[1A], this association is performed by processing servers 104 of content server 100 using identification

information (such as device identifiers including common IP address and port numbers/MAC addresses) received from user devices. *See* Section XII.A.1.b. Thus, while Madhavan's content server 100 may be accessed by "other network entities," such as "broadcast television entities [**"the provider of television service"**]…which broadcast television programs to the user entities 110," this access is entirely unrelated to the association of the IP addresses. *See* Section XII.A.1; Ex. 1162, 5:17-27. Accordingly, a POSA would recognize associating the IP addresses of Madhavan's client machine 130 and media device 150 based on identification information (such as device identifiers including common IP address and port numbers/MAC addresses) is done "**without receiving personally identifiable information from the provider of television service."**

382. Madhavan's content server 100 may be accessed by "other network entities," such as "broadcast television entities [**"a provider of television service"**]…which broadcast television programs to the user entities 110." Ex. 1162, 5:17-27. As I discuss above for claim element [1B], when the user accesses the content server 100 using a media device 140 that includes a STB, one or more servers of the content server 100 may cause delivery of targeted television advertisements to media device 140 based on identification information and user event/action data associated with the client machine 130 that was previously stored to database 200 by the content server 100. *See* Section XII.A.1.c; Ex. 1162, 7:14-22, 8:34-41, 9:4-

8, 9:36-67, Fig. 6. Specifically, the processing servers 104 of content server 100 use the identification information (a device identifier such as an IP address) of the media device 140 to identify the user's profile and to access respective tables within data storage module 106 (e.g., database 200) to retrieve classification categories related to previously-stored user event/action data for that user and sends that information to advertising servers 105. Ex. 1162, 7:48-53, 8:9-33, 9:36-67, 11:34-61. The advertising servers 105 of the content server 100 access respective tables within advertising storage module 108, which is coupled to advertising servers 105, to retrieve and transmit a television advertisement related to the previously-stored user event/action data and/or content classification categories. Ex. 1162, 4:57-5:2, 8:16-33, 9:36-67, 10:47-67, 11:38-61, Figs. 6-10. Thus, Madhavan's targeting advertisement process does not send or receive any user profile information to or from the "broadcast television entities" (**"provider of television service"**). *See* Section XII.A.1.b-c. Accordingly, Madhavan describes directing the advertisement **"without receiving personally identifiable information from the provider of television service."**

383. For example, the '260 Patent specifically describes that PII may include "information that can be used to identify a specific person, including but not limited to: name, Social Security number (SSN), date of birth, street address, email address, static IP address (if any), phone number (home, work, wireless), financial account

numbers (bank accounts, credit accounts, or any other financial data), driver's license number, vehicle registration number, vehicle license number, facial photographs, fingerprints, handwriting or signature, or any other information that can assist in identifying a specific person." Ex. 1101, 6:1-10. In contrast, non-PII is defined as "information about a person that typically cannot be used to specifically identify that person, including but not limited to: city, state, or country of residence, age, gender, race, ethnicity, school or workplace (if sufficiently large), salary or income, hobbies, dynamically assigned IP addresses, online sites visited, online searches conducted, or other information that is useful to know about a person but done [SIC] not by itself allow one knowing the information to identify the particular person." Ex. 1101, 6:11-20. Thus, a POSA would understand that Madhavan-Park and Madhavan-Park-Kato teach "**wherein the online access and set-top box IP addresses are associated in part (a), and the first television advertisement is caused to be directed in part (b), without receiving personally identifiable information from the provider of television service.**"

384. Accordingly, as shown above, Madhavan-Park and Madhavan-Park-Kato teach the additional limitations included in dependent claim 60, and renders claim 60 obvious to a POSA.

56. Dependent Claim 82

385. Aside from their dependencies, claims 60 and 82 are nearly identical but for the change from "**online access and set-top box IP addresses**" to "**online user interface device and set-top box identifier**" (claim 82). It is my opinion that my analysis for claim 60 is applicable to claim 82. Therefore, it is my opinion that a POSA would have found claim 82 obvious in view of Madhavan-Park and Madhavan-Park-Kato for the same reasons as claim 60. *See* Section XII.A.55, above.

57. Dependent Claim 71: "The method of claim 61 wherein the online user interface device identifier includes the first online access IP address."

386. Claim 71 of the '260 Patent depends from claim 61 and further requires "wherein the online user interface device identifier includes the first online access IP address." Ex. 1101, claim 71. As discussed above, claim 61 is taught by Madhavan in view of Park, and Madhavan in view of Park and Kato. *See* Section XII.A.2.

387. As I previously explained with respect to claims 1 and 61 above at Sections XII.A.1.b-c and XII.A.2, respectively, Madhavan in view of Park, and Madhavan in view of Park and Kato teach electronically associating device identifiers (e.g., included in identification information for a device) that include a device's online access IP address and port number. In the combinations, Park's IP

sharing router would connect Madhavan's client devices such as client machine 130 and media device 140 to the public internet using a shared common IP address. Ex. 1163, ¶¶ [0003], [0007]-[0011], [0012], [0014]-[0016], [0029]-[0030], Abstract, Fig. 2. Additionally, Park's IP sharing router (e.g., router 110/210) includes NAT functionality in which the router 110/210 is assigned a public IP address by an Internet Service Provider (ISP), and the router assigns private IP addresses to devices that are connected to the router. Ex. 1163, ¶¶ [0030], [0035]-[0036], [0038]. As I explained above for claims 1 and 61 (Sections XII.A.1 and XII.A.2), NAT is a well-known method of mapping multiple IP addresses (e.g., private addresses) inside a network to a common public IP address at least as of May 1994. *See* Ex. 1112, pp. 36-38; Ex. 1113, ¶¶ [0004]-[0009]. Using NAT, devices connected to the router in Madhavan-Park and Madhavan-Park-Kato (e.g., the client machine (i.e., the online user interface device) and media device 140 (e.g., a set-top box)) as well as the router (i.e., the online access device) would have and be identified by the same common IP address to devices external to the router. Sections XII.A.1 and XII.A.2; Ex. 1163, ¶ [0038]; Ex. 1162, 10:65-11:17; *see also* Ex. 1162., Abstract, 1:38-46, 2:62-3:55, 8:37-41. To differentiate between the router-connected devices, distinct port numbers may be used as part of port translation. Sections XII.A.1 and XII.A.2; Ex. 1163, ¶ [0038]. Accordingly, in Madhavan-Park and Madhavan-Park-Kato, the IP address of the client machine (claimed "**online user interface device identifier**")

includes the common IP address assigned to the IP sharing router (claimed "**includes the first online access IP address**").

388. It is thus my opinion that Madhavan in view of Park, and Madhavan in view of Park and Kato teach the additional limitations included in dependent claim 71, and render claim 71 obvious to a POSA.

58. Dependent Claim 72: "The method of claim 61 wherein the set-top box identifier includes the common IP address."

389. Claim 72 of the '260 Patent depends from claim 61 and further requires "wherein the set-top box identifier includes the common IP address." Ex. 1101, claim 72. As discussed above, claim 61 is taught by Madhavan in view of Park, and Madhavan in view of Park and Kato. *See* Section XII.A.2.

390. As I also previously explained for claims 1 and 61, Madhavan in view of Park, and Madhavan in view of Park and Kato teach electronically associating device identifiers that include a device's online access IP address and port number. Sections XII.A.1 and XII.A.2. As I further explained for claims 1, 61, and 71, in the combinations, Park's IP sharing router would connect Madhavan's client devices such as client machine 130 and media device 140 (e.g., which includes a set-top box) to the public internet using a shared public IP address (e.g., the claimed "**common IP address**"). Sections XII.A.1, XII.A.2, and XII.A.57; Ex. 1163, ¶¶ [0003], [0007]-[0012], [0014]-[0016], [0029]-[0030], Abstract, Fig. 2. Additionally, Park's IP sharing router (e.g., router 110/210) includes NAT functionality in which the

router 110/210 is assigned a public IP address by an Internet Service Provider (ISP), and the router assigns private IP addresses to devices that are connected to the router. Ex. 1163, ¶¶ [0030], [0035]-[0036], [0038]; *see* Ex. 1112, pp. 36-38; Ex. 1113, ¶¶ [0004]-[0009]. Using NAT, devices connected to the router in Madhavan-Park and Madhavan-Park-Kato (e.g., the client machine (i.e., the online user interface device) and media device 140 (e.g., a set-top box)) as well as the router (i.e., the online access device) would have and be identified by the same common IP address to devices external to the router. Sections XII.A.1 and XII.A.2; Ex. 1163, ¶ [0038]; Ex. 1162, 10:65-11:17; *see also* Ex. 1162, Abstract, 1:38-46, 2:62-3:55, 8:37-41. To differentiate between the router-connected devices, distinct port numbers may be used as part of port translation. Sections XII.A.1 and XII.A.2, XII.A.57; Ex. 1163, ¶ [0038]. Accordingly, in Madhavan in view of Park, and Madhavan in view of Park and Kato, the identification information of the media device 140, such as the IP address and port number of the media device 140 (claimed "**set-top box identifier**"), includes the common IP address assigned to the IP sharing router (claimed "**includes the first online access IP address**").

391. Accordingly, as shown above, Madhavan in view of Park, and Madhavan in view of Park and Kato teach the additional limitations included in dependent claim 72, and render claim 72 obvious to a POSA.

59. Dependent Claim 73: "The method of claim 61 wherein the set-top box identifier includes at least a portion of the common IP address."

392. Claim 73 of the '260 Patent depends from claim 61 and further requires "wherein the set-top box identifier includes at least a portion of the common IP address." Ex. 1101, claim 73. As discussed above, claim 61 is taught by Madhavan in view of Park and Madhavan in view of Park and Kato. *See* Section XII.A.2.

393. As I explained above at Section XII.A.58 with respect to claim 72, both Madhavan in view of Park, and Madhavan in view of Park and Kato teach "wherein the set-top box identifier includes the common IP address." Therefore, a POSA would have understood that including the common IP address teaches including "**at least a portion of the common IP address**," as required in claim 73.

394. Accordingly, as shown above, Madhavan-Park and Madhavan-Park-Kato teach the additional limitations included in dependent claim 73, and render claim 73 obvious to a POSA.

60. Dependent Claim 74: "The method of claim 61 wherein the set-top box identifier includes a set-top box IP address."

395. Claim 74 of the '260 Patent depends from claim 61 and further requires "wherein the set-top box identifier includes a set-top box IP address." Ex. 1101, claim 74. As discussed above, claim 61 is taught by Madhavan in view of Park, and Madhavan in view of Park and Kato. *See* Section XII.A.2.

396. As I have previously explained at Sections XII.A.1, XII.A.2, XII.A.58, and XII.A.59 for claims 1, 61, and 72-73, respectively, Madhavan as modified by Park (and thus, Madhavan as modified by Park and Kato) teaches electronically associating device identifiers that include a device's online access IP address and port number. Sections XII.A.1, XII.A.2. As I further explained for claims 1, 61, and 72-73, in the combinations, Park's IP sharing router would connect Madhavan's client devices such as client machine 130 and media device 140 to the public internet using a shared common IP address, and use NAT to translate between the public common IP address shared by all router-connected devices, and a private IP address specific to each router-connected device. Sections XII.A.1, XII.A.2, XII.A.58, and XII.A.59; Ex. 1163, ¶¶ [0003], [0007]-[0011], [0012], [0014]-[0016], [0029]-[0030], [0035]-[0036], [0038], Abstract, Fig. 2; *see* Ex. 1112, pp. 36-38; Ex. 1113, ¶¶ [0004]-[0009]. Accordingly, in Madhavan in view of Park, and Madhavan in view of Park and Kato, the media device 140 (claimed "**set-top box identifier**") would be identified by the common IP address assigned to the IP sharing router, which is also the IP address of the set-top box when communicating with external devices (claimed "**set-top box IP address**").

397. Accordingly, Madhavan-Park and Madhavan-Park-Kato teach the additional limitations included in dependent claim 74, and render claim 74 obvious to a POSA.

B. GROUNDS C-D: MADHAVAN IN VIEW OF PARK AND MARTINEZ AND/OR MADHAVAN IN VIEW OF PARK, KATO, AND MARTINEZ

1. Independent Claim 26: "A method implemented using computer equipment, the method comprising: (a) with the computer equipment, automatically electronically delivering electronic user profile information to a computer system that includes a server that electronically associates, for each of a multitude of users, an online access IP address of the user and a set-top box IP address of that user based on a common IP address, (b) wherein network traffic is routed via the common IP address for both an online user interface device and a set-top box of that user, (c) wherein delivered user profile information of a first user of the multitude of users (i) is derived from online activity of the first user from a first online user interface device via a first online access IP address and (ii) includes identification of the first online access IP address and the time and date of the online activity, and (d) as a result of which delivery, a first television advertisement can be directed to a set-top box for presentation via that set-top box, selectively, wherein the set-top box is indicated by the set-top box IP address that the server associates with the first online access IP address."

398. Claim 26 (including claim elements [26PRE]-[26D] is largely identical to claim 1. Ex. 1115; Ex. 1101, claims 1, 26.

399. One minor difference between the two claims is that certain elements of the "computer system" in claim 1 are delineated as part of "**computer equipment**" in claim 26.

400. Additionally, it is my opinion that claim 26 includes two limitations that are absent from claim 1: (1) claim 26 requires "**computer equipment**" to "**automatically**" deliver electronic user profile information to the computer system

that performs the electronic association of IP addresses (Element [26A]), and (2) claim 26 further requires that delivered user profile information includes identification of the first online access IP address and the time and date of the online activity (Element [26C]). Ex. 1115; Ex. 1101, claims 1, 26. These features of claim 26 are taught by Madhavan-Park-Martinez and Madhavan-Park-Kato-Martinez, as I describe further below.

a) [26PRE]: "A method implemented using computer equipment, the method comprising:"

401. Assuming the preamble [26PRE] imposes a limitation, in my opinion it is disclosed by and rendered obvious over the combinations of Madhavan in view of Martinez and Park, and Madhavan in view of Martinez, Park and Kato.

402. Madhavan teaches "facilitat[ing] targeting of advertisements based on mutual information sharing between devices over a network." Ex. 1162, Abstract.

403. Madhavan's system includes a network content and advertising entity 100 (**red**) that made up of a plurality of separate computer-based servers. Ex. 1162, 4:26-36, 4:57-65, 5:18-27, 8:5-8, 8:53-56. The plurality of servers include web servers 102, advertising servers 105, and advertising storage module 108 (**orange**). Ex. 1162, 4:26-36, 4:57-65, 5:18-27, 8:5-8, 8:53-56. As I explain below, it is my opinion that a POSA would understand Madhavan's web servers 102, advertising servers 105, and advertising storage module 108 to collectively correspond to the claimed "**computer equipment.**"

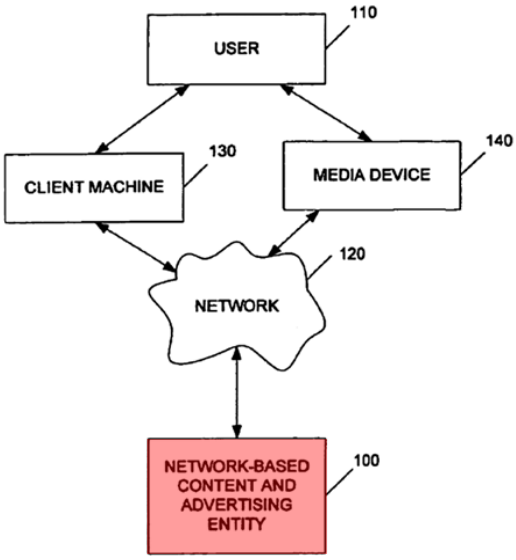

Ex. 1162, Fig. 1 (annotated)

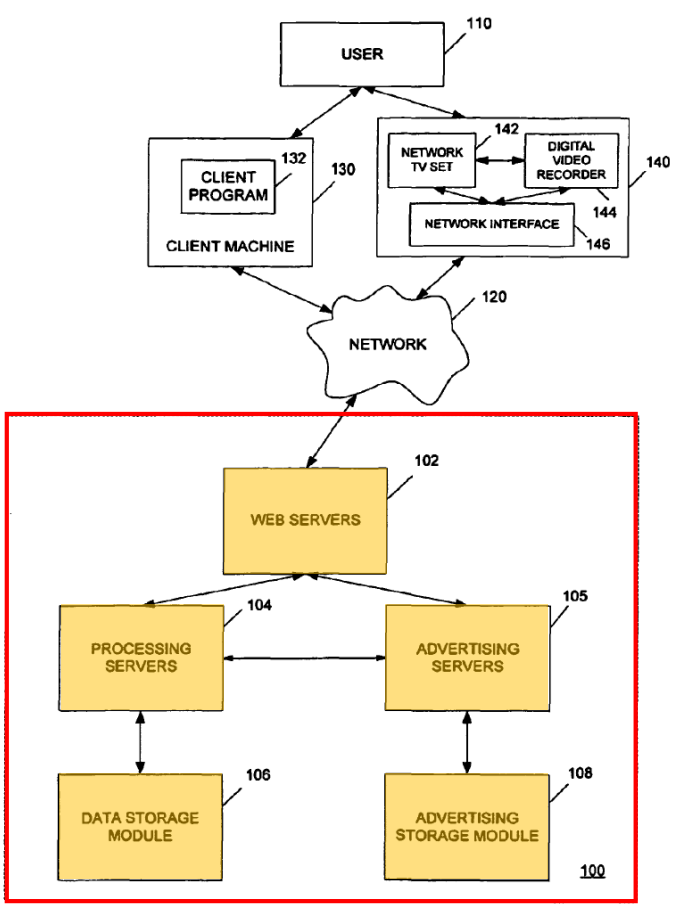

Ex. 1162, Fig. 2 (annotated)

404. Madhavan implements its method through "software programs executed upon some form of processing core (such as the CPU of a computer) or otherwise implemented or realized upon or within a machine or computer readable medium." Ex. 1162, 4:26-36, 12:41-53, 12:21-29, Figs. 1-3, 12. Because each of web servers 102, advertising servers 105, and advertising storage module 108 have a processing core on which software programs may execute, a POSA would understand these servers to collectively correspond to the claimed "**computer**

equipment." Ex. 1101, 4:26-36, 4:57-65, 5:18-27, 8:5-8, 8:53-56, 12:41-53, 12:21-29, Figs. 1-3, 12.

405. Accordingly, it is my opinion that Madhavan renders Element [26PRE] obvious.

b) [26A]: "with the computer equipment, automatically electronically delivering electronic user profile information to a computer system that includes a server that electronically associates, for each of a multitude of users, an online access IP address of the user and a set-top box IP address of that user based on a common IP address,"

406. Madhavan teaches implementing a "method to facilitate targeting of advertisements based on mutual information sharing between devices over a network, such as the Internet." Ex. 1162, 1:7-11, Abstract. Madhavan's content server 100 may accessed by multiple users. *See* e.g., Ex. 1162, Abstract, 1:36-43, 2:62-67, 4:46-56, 11:62-67. As I explain above, the various functions and steps performed by Madhavan's systems are performed by one or more processing elements of the content server 100 for each of the various users ("**for each of a multitude of users**") that connect to the content provider 100 via their respective user devices. Section XII.A.1.

407. As I explain above, Madhavan's content server 100 (**red**) comprises a plurality of separate computer-based servers, which include web servers 102, advertising servers 105, and advertising storage module 108 (**orange**) (collectively,

"**computer equipment**"). Ex. 1162, 4:26-36, 4:57-65, 5:18-27, 8:5-8, 8:53-56. As I explain below, the remaining separate computer-based servers of content server 100--processing servers 104, and the data storage module 106 (**purple**) to which those servers are connected—collectively correspond to the claimed "**a computer system that includes a server**."

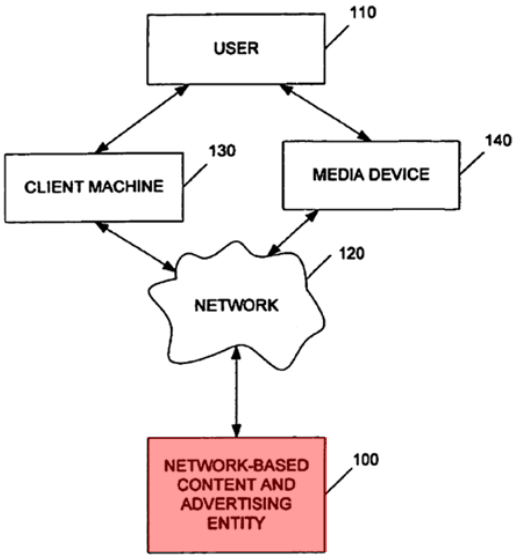

Ex. 1162, Fig. 1 (annotated)

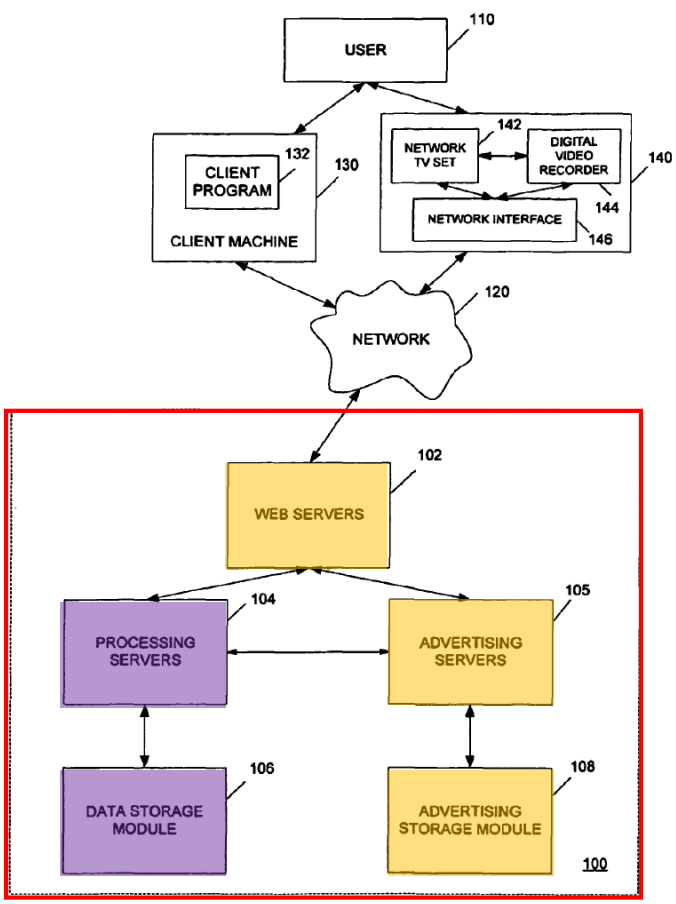

Ex. 1162, Fig. 2 (annotated)

408. Madhavan implements its method through "software programs executed upon some form of processing core (such as the CPU of a computer) or

otherwise implemented or realized upon or within a machine or computer readable medium." Ex. 1162, 12:41-53, 4:26-36, 12:21-29; Figs. 1-3, 12. Because each of the processing servers 104 would have a processing core on which software programs may execute, a POSA would understand these servers, and the data storage module 106 to which those servers are connected, to collectively correspond to the claimed "**computer system that includes a server**." Ex. 1162, 2:62-3:52, 4:26-36, 7:14-55, 8:42-9:3, 10:65-11:11, 12:41-53, Figs. 1-3, 12.

409. In Madhavan, when a user connects to the content server 100 via the Internet using client machine 130, the web servers 102 receive, from client machine 130, its identification information and user data containing events or actions performed by user 110 while accessing the Internet via client machine 130. Ex. 1162, 1:44-2:3, 3:1-4:13, 7:60-67, 8:37-56, 10:3-14, 10:65-11:11, 11:27-37, Figs. 2, 6, 9, 10. As I explain in detail above, this corresponds to the claimed "**electronic user profile information**." *See* Sections XII.A.1.b-c. As I further explain above, the identification information in Madhavan-Park and Madhavan-Park-Kato may include, for example, a unique IP address that is specifically assigned to the device, a public IP address of a shared router, a port number for the device, and/or the MAC address for the device. *See* Sections XII.A.1.b-c.; Ex. 1162, 7:14-18, 7:33-42, 7:60-67; Ex. 1163, ¶¶ [0030], [0035]-[0038]; Ex. 1164, ¶¶ [0005]-[0006], [0030]-[0039].

410. As I further explain in detail above, Madhavan teaches that its web servers 102 (part of its "**computer equipment**") automatically delivers this "**user profile information**" to its processing servers 104 (part of its "**computer system**"). Ex. 1162, Abstract 2:62-3:51, 4:37-45, 5:3-11, 7:14-36, 7:60-67, 8:42-56, 10:35-40, 10:65-11:11, Fig. 2; Section XII.A.1.b-c. In my opinion, this delivery is automatic because the web servers 102 are programmed to do so. Ex. 1162, 2:62-3:51, 7:14-55, 8:42-9:3, 10:65-11:11, 12:49-62, Fig. 2; Ex. 1101, 11:36-64. In my opinion, this delivery is further automatic because the web servers 102 deliver this information to processing servers 104 without the processing servers 104 having to request receipt or initiate the delivery. *Id.*

411. As I further discuss in detail above, in the Madhavan-Park and Madhavan-Park-Kato systems, processing servers 104 of the content server 100 (part of the "**computer system**") would "**electronically associat[e]**" the identification information of client machine 130 **("online access IP address of the user**") with the identification information of its media device based on their use of the "**common IP address**" of Park's shared IP router. *See* Section XII.A.1.b; Ex. 1162, 7:14-18, 7:33-42, 7:60-67; Ex. 1163, ¶¶ [0030], [0035]-[0038]; Ex. 1164, ¶¶ [0005]-[0006], [0030]-[0039]. Specifically, processing servers 104 of content server 100 of Madhavan's modified system would store, in the user's profile (e.g., user table 210 of database 200), this common IP address along with a respective port number and/or

MAC address as the identification information for each of client machine 130 and media device 140 (which as discussed above, includes a set-top box). *See* Ex. 1162, 7:33-36, 7:60-67, 8:42-48, 9:18-29, 10:3-9, 10:67-11:6, 11:32-37. By linking or associating the identification information, received from client machine 130 and media device 140, to a particular user profile based on the respective identification information of client machine 130 and media device 140, the user profile associates—via respective identification information—the client machine 130 and media device 140 as belonging to a same user ("**electronically associating an online access IP address of the user and a set-top box IP address of that user based on a common IP address**"). *Id.*

412. I have been asked to also consider a possible argument that the recited computer equipment must be a different device (e.g., separate) from the recited computer system. It is my opinion that this feature is taught in Martinez. Like Madhavan, Martinez is directed to a targeted advertisement system. Ex. 1165, Abstract.

413. Martinez's system includes at least a management module 20 and a plurality of data collection sources, such as data gathering modules and various third party sources. Ex. 1165, ¶¶ [0035], [0045]-[0046], Abstract, Figs. 1, 4. Martinez's management module is independent from its plurality of data sources. Ex. 1165, ¶¶ [0001], [0004], [0005], [0009], [0035], [0044]-[0049], [0058]-[0059], [0068],

[0074], [0085], [0091], [0098], [0112]-[0128]. For example, Martinez teaches that one or more of its plurality of data sources may be third parties, such as businesses or government entities. Ex. 1165, ¶¶ [0005], [0007], [0011], [0035]-[0037], [0049]-[0053], [0063]-[0069], [0091], [0098], [0115]-[0117], [0119]-[0123], [0128]. The management module may also then allow those third-parties to access the user profiles for purposes of targeted advertising. Ex. 1165, ¶¶ [0010]-[0011], [0047], [0048], [0073]-[0076], [0109]-[0117], [0119]-[0129]. Martinez discloses a bi-directional compensation scheme wherein the data sources (including third parties) may be compensated for delivering collected data to the management module and wherein the management module may be compensated by the third parties for user profile access and the delivery of targeted advertisements. Ex. 1165, ¶¶ [0008]-[0011], [0047], [0048], [0073]-[0076], [0109]-[0117], [0119]-[0129]. Thus, it is my opinion that a POSA would understand that the management module may be operated by an entity that is independent of the data sources. Ex. 1165, ¶¶ [0001], [0004], [0005], [0009], [0035], [0044]-[0049], [0058]-[0059], [0068], [0074], [0085], [0091], [0098], [0112]-[0128].

414. Martinez's management module collects interaction data, spatial data, and/or temporal data from its plurality of data collection sources. Ex. 1165, ¶¶ [0006], [0011], [0035]-[0037], [0049]-[0053], [0063]-[0069], [0089], [0091], [0098], [0115]-[0117], [0119]-[0123], [0128]. The management module then

generates deduced information from the collected data. Ex. 1165, ¶¶ [0004]-[0007], [0058]-[0063], [0070]-[0071], [0100]-[0103]. Additionally, the management module creates and maintains user profiles using the collected data and the deduced information. Ex. 1165, ¶¶ [0004]-[0012], [0049]-[0053], [0058], [0063]-[0071], [0085], [0089], [0096], [0100]-[0103]. The management module then directs targeted advertisements, which are selected based partly on user profiles, to one or more media devices for display. Ex. 1165, ¶¶ [0047], [0048], [0089]-[0092], [0104]-[0108], [0127]. Finally, the management module monetizes its user profiles. Ex. 1165, ¶¶ [0008]-[0011], [0047], [0048], [0073]-[0076], [0109]-[0117], [0119]-[0129].

415. One of the plurality of data sources utilized by the management module to generate and maintain a user's profile is the user itself. Specifically, Martinez teaches data gathering modules that are generally associated with users' devices, such as mobile phones, laptop computers, and STBs and may be hardware and/or software. Ex. 1165, ¶¶ [0037], [0040], [0045]. A data gathering module actively and/or passively gathers electronic data associated with the electronic device, including interaction data, spatial data, and/or temporal data. Ex. 1165, ¶¶ [0035]-[0037]. For any given user, this collected data is then sent to the management module, which uses the collected data for the user to generate deduced information for the user, and then uses the user's collected data and deduced information to

maintain the user's profile. Ex. 1165, ¶¶ [0004]-[0012], [0049]-[0053], [0058]-[0071], [0085], [0096], [0100]-[0103].

416. By designing its management module independently from its data sources, Martinez's management module is further able to receive and utilize third-party user data in its user profiles. Ex. 1165, ¶¶ [0005]-[0007], [0011], [0035]-[0037], [0049]-[0053], [0063]-[0069], [0089], [0091], [0098], [0115]-[0117], [0119]-[0123], [0128]. The third-party data for any given user includes other users, businesses, and/or government entities. Ex. 1165, ¶¶ [0005]-[0007], [0011], [0035]-[0037], [0049]-[0053], [0063]-[0069], [0091], [0098], [0115]-[0117], [0119]-[0123], [0128]. The management module uses the collected third-party data to generate deduced information, and then stores the collected and deduced information in the user's profile and uses it to select targeted advertisements. Ex. 1165, ¶¶ [0004]-[0012], [0047]-[0053], [0058], [0063]-[0071], [0085], [0090]-[0092], [0096], [0100]-[0108], [0127].

417. Configuring its management module to be independent from the data sources enables Martinez's system to use, for any given user, both data collected from that user and data collected from third parties (along with deduced information generated from all of the aforementioned collected data) to create and maintain that user's profile. Ex. 1165, ¶¶ [0004]-[0012], [0049]-[0053], [0058], [0063]-[0071], [0085], [0089], [0096], [0100]-[0103]. Martinez expressly states that the inclusion

of the third-party data in its user profiles results in "more accurate user profiles." Ex. 1165, ¶ [0120]; *see also id.*, ¶¶ [0005], [0007], [0064]-[0068], [0128]. In my opinion, a POSA would understand that this third-party data enables Martinez's system to utilize more extensive data from a wider variety of sources in its user profiles. Because of this broader data reach, Martinez's user profiles are more holistic representations of users, and their use in any targeted advertisement system would allow for a more precise selection of targeted advertisements (and for any given advertisement, a more precise selection of relevant user profiles). This is evidenced by Martinez's compensation scheme: because Martinez maintains "richer user profiles" by virtue of collecting and utilizing third-party user data, its management module is able to extract compensation from vendors for access to those user profiles for purposes of targeted advertising. Ex. 1165, ¶¶ [0097], [0098], [0119]-[0120] (describing "a joint data sharing [compensation] arrangement" between third parties and profile maintainers), [0121]-[0128].

418. As I note above, Madhavan's user profiles are generated using identification and online activity data received from its users' devices. In my opinion, a POSA would have understood that it would have been beneficial to generate richer and more accurate user profiles using not only user-provided profile information, but also third-party-provided profile information (such as user profile information from other users, businesses, vendors, and government entities, as

taught in Martinez). Those richer user profiles could not only be used within Madhavan's system to enable more precise targeted advertising, but could also be used as the basis for receiving compensation from interested third-parties in exchange for user profile access. To facilitate this, it would have been obvious to a POSA to modify Madhavan-Park and Madhavan-Park-Kato by implementing its user profile manager (e.g., the "**computer system**" that includes processing servers 104) independently from its user profile information providers (e.g., the "**computer equipment**" that includes web servers 102), as taught in Martinez in order to both generate more accurate user profiles and leverage those more accurate user profiles into a monetized system by receiving compensation from other third parties in exchange for accessing its richer user profiles. Ex. 1165, ¶¶ [0120], [0128]. A POSA would have understood that more accurate user profiles would allow a targeted advertising system to more precisely deduce a user's activities and behaviors and thus more effectively select a user advertisement.

419. A POSA would understand this to be a simple combination of prior art elements according to known methods to yield predictable results. The prior art elements to be combined are Madhavan-Park's and Madhavan-Park-Kato's systems, in which processing servers 104 generate user profiles using user-provided information received from web servers 102, and Martine's system which includes an independent management module that is able to incorporate third-party data into

its user profiles. The known method is the independent operation of Madhavan-Park's and Madhavan-Park-Kato's processing servers 104 and data storage modules 106 (e.g., from the "**computer equipment**") in order to enable collection and utilization of third-party user data. The predictable results would be the generation of richer, more accurate user profiles by virtue of including third-party data and the monetization of those user profiles via third-parties).

420. A POSA would understand that Madhavan-Park-Martinez and Madhavan-Park-Martinez simply uses known techniques to improve a similar system in the same way. Madhavan and Martinez are both directed to systems and methods for generating and maintaining user profiles for the purposes of targeting advertisements to users. Ex. 1162, 1:7-11, 1:36-2:3, Abstract; Ex. 1165, ¶¶ [0001]-[0006], [0046]-[0048]. Both Martinez's and Madhavan's user profiles are associated with a user's electronic device and the electronic data collected therefrom based on a unique device identifier. Ex. 1162, 5:53-66, 7:33-53, 8:9-15, 8:57-67, 9:36-40, 10:10-25; Ex. 1165, ¶¶ [0004], [0006], [0011]-[0012], [0043]-[0047], [0063], [0084]. The known technique would be Martinez's use of third-party data to build and monetize richer user profiles by implementing user profile information collection independently from profile management. The improvement would be a system that collects broader, more extensive data from third-parties to generate more accurate user profiles for internal use and external monetization.

421. Further, combining Madhavan-Park with Martinez would have been merely applying a known technique to a known system ready for improvement. The system to be improved is the Madhavan-Park system, which solely use user-generated data to build user profiles for targeted advertisement and do not explicitly establish independence between the collection and use of that user-generated data. Ex. 1162, 3:1-47. Martinez teaches implementing user profile information collection independently from profile management to utilize both user-provided data and third-party data to generate more accurate user profiles that may be monetized. Ex. 1165, ¶¶ [0005], [0007], [0064]-[0068], [0120], [0128].

422. A POSA would have been motivated and had the skills to implement the combination with a reasonable expectation of success. Madhavan-Park and Madhavan-Park-Kato's system already includes the computer system and the computer equipment. In my opinion, it would have been simple to program these already-existing components to operate independently. Further, these systems already use user-provided use profile information to generate user profiles. In my opinion, it would have been straightforward to program these components to collect and utilize additional user data from third-parties in its user profiles. Finally, it is my opinion that a POSA would further have had the skills to program these components to implement a bi-directional compensation scheme with third-parties.

423. Accordingly, Madhavan-Park-Martinez and Madhavan-Park-Kato-Martinez render Element [26A] obvious.

c) [26B]: "wherein network traffic is routed via the common IP address for both an online user interface device and a set-top box of that user,"

424. As I explain above, in the combined Madhavan-Park and Madhavan-Park-Kato systems, network traffic to and from the client machine 130 and media device 140 would be routed using the common IP address of the IP sharing router, e.g., Park's IP sharing router 210. Ex. 1163, ¶¶ [0030], [0035]-[0036], [0038]; Section XII.A.1.b. In my opinion, the independent operation of the computer equipment and computer system in the Madhavan-Park-Martinez and Madhavan-Park-Kato-Martinez systems does not change my analysis above.

d) [26C]: "wherein delivered user profile information of a first user of the multitude of users (i) is derived from online activity of the first user from a first online user interface device via a first online access IP address and (ii) includes identification of the first online access IP address and the time and date of the online activity, and"

425. As I discuss above regarding Element [26A], Madhavan-Park and Madhavan-Park-Kato teaches that when user 110 uses a client machine 130 ("**a first online user interface device**") to access the content server 100 via the public IP address of Park's IP sharing router ("**a first online access IP address**"), the common IP address of client machine 130 ("**identification of the first online access IP**

address") and event/action data indicating the user's online activity on client machine 130 via the public IP address of Park's IP sharing router ("**online activity of the first user from a first online user interface device via a first online access IP address**") is sent to processing servers 104 via web servers 102 ("**delivered user profile information of a first user**"). Section XII.B.1.b.

426. Madhavan teaches that a user's profile may include the user's "short term" and "long term" behavioral data. Ex. 1162, 5:66-6:2. However, Madhavan-Park and Madhavan-Park-Kato do not disclose collecting and using "**the time and date of the online activity**" in the user profile. However, in my opinion, this feature is taught in Martinez.

427. Martinez's management module collects interaction data, spatial data, and/or temporal data from its plurality of data collection sources. Ex. 1165, ¶¶ [0006], [0011], [0035]-[0037], [0049]-[0053], [0063]-[0069], [0089], [0091], [0098], [0115]-[0117], [0119]-[0123], [0128]. The management module then generates deduced information from the collected data (for example, by correlating the user's online activities as represented by interaction data with the user's temporal data to generate deduced information indicative of the user's behavioral patterns). Ex. 1165, ¶¶ [0004]-[0007], [0058]-[0063], [0070]-[0071], [0100]-[0103]. Additionally, the management module creates and maintains user profiles using the collected data and the deduced information. Ex. 1165, ¶¶ [0004]-[0012], [0049]-

[0053], [0058], [0063]-[0071], [0085], [0089], [0096], [0100]-[0103]. The management module then directs targeted advertisements, which are selected based partly on user profiles, to one or more media devices for display. Ex. 1165, ¶¶ [0047], [0048], [0089]-[0092], [0104]-[0108], [0127].

428. Martinez states that its temporal data is "time based data (e.g., time stamps) that, relate to specific times and/or events associated with a user and/or the electronic device." Ex. 1165, ¶ [0051]; *see also id.*, ¶¶ [0036]-[0040], [0049]-[0050], [0058], [0070], [0102]-[0103]. Thus, a POSA would understand Martinez's temporal data to correspond to the claimed "**the time and date of the online activity**." The temporal data and information that is deduced based partly on the temporal data may be stored in the user profiles. Ex. 1165, ¶¶ [0004], [0046], [0049]-[0059], [0063]. Importantly, Martinez's use of temporal data in its user profile information "deliver[s] useful services and information to end users, and provide[s] commercial opportunities to advertisers and retailers," e.g., targeted advertising. Ex. 1165, ¶¶ [0002], [0038], [0049], [0053], [0057]-[0058], [0063], [0076], [0084]. Madhavan's system is directed to building a user profile using various types of user data, including demographic data, geographic data, and short-term and/or long term behavioral data. Ex. 1162, 5:66-6:2.

429. It would have been obvious to a POSA to include additional types of user data, such as Martinez's temporal data, into the user profiles in Madhavan's

modified systems because it would produce more holistic user profile which in turn, would provide advertisers additional information that could be combined with other information (for example, Madhavan's geographic or online activity data) to better deduce a user's activities and behavioral patterns when selecting a targeted advertisement. Ex. 1165, Table 3, [0002]-[0006], [0046]-[0047], [0049], [0072]-[0073]; Ex. 1162, 5:66-6:2. For instance, it would provide a straightforward way to achieve Madhavan's association of long-term and short-term behaviors.

430. A POSA would have understood this to be a combination of prior art elements according to known methods to yield predictable results. The prior art elements include the previously-discussed modified Madhavan systems that associate user activity data from various devices with the same user profile, and Martinez's user profiles that contain data indicating when a user's activity on each device occurred. A POSA would have made the combination by programming the system to collect and store the temporal data. The predictable results of the combination would cause user profiles to include temporal data, which can be used to deduce behavioral patterns in user data for the purpose of targeting users with advertisements. A POSA would have found this combination as obvious as use of known technique to improve similar devices (methods, or products) in the same way this to be combine prior art elements according to known methods to yield predictable results. Like Martinez, Madhavan-Park-Martinez's and Madhavan-

Park-Kato-Martinez's systems provide targeted advertisements to users based on their user profiles, which can include behavioral data such as online activity data from each of the user's devices. Ex. 1162, 1:7-11, 1:36-2:3, Abstract; Ex. 1165, ¶¶ [0001]-[0006], [0046]-[0048]. Further, the user profiles include unique device identifiers to associate user devices and the collected data. Ex. 1162, 5:53-66, 7:33-53, 8:9-15, 8:57-67, 9:36-40, 10:10-25; Ex. 1165, ¶¶ [0004], [0006], [0011]-[0012], [0043]-[0047], [0063], [0084]. The known technique would be Martinez's inclusion of time and date of online activity in the user profiles used to provide targeted advertisements. Thus, the user profiles in Madhavan-Park-Martinez's and Madhavan-Park-Kato-Martinez would be improved by including time and date information of online activity in its user profile information, which would beneficially allow for the deducing of behavioral patterns for use in selecting targeted advertising.

431. A POSA would have had a reasonable expectation of success because this combination would have only required basic programming modifications to store the obtain and store the additional information, which were well within the skill of the art. As Madhavan-Park-Martinez and Madhavan-Park-Kato-Martinez already teaches using multiple types of user information in its user profiles, a POSA would have known how to add yet another type of user data—temporal data—to those user

profiles and how to use that data to deduce behavioral patterns for use in targeted advertisements.

e) [26D]: "as a result of which delivery, a first television advertisement can be directed to a set-top box for presentation via that set-top box, selectively, wherein the set-top box is indicated by the set-top box IP address that the server associates with the first online access IP address."

432. As I explain above, in the combined Madhavan-Park and Madhavan-Park-Kato systems, as a result of delivering user profile information, a television advertisement is sent to media device 140 using the same IP address associated with client machine 130 (e.g., the public IP address of the shared IP router). Section XII.A.1.b. In my opinion, the independent operation of the computer equipment and computer system in the Madhavan-Park-Martinez and Madhavan-Park-Kato-Martinez systems does not change my analysis above.

2. **Independent Claim 38: "A method implemented using computer equipment, the method comprising: (a) with the computer equipment, automatically electronically delivering electronic user profile information to a computer system that includes a server that electronically associates, for each of a multitude of users, an online user interface device identifier, which indicates an online user interface device of the user, and a set-top box identifier, which indicates a set-top box of that user, which electronic association is based on a common IP address, (b) wherein network traffic is routed via the common IP address for both the online user interface device and the set-top box of that user, (c) wherein delivered user profile information of a first user of the multitude of users (i) is derived from online activity of the first user from the first user's online user interface device via a first online access IP address and (ii) includes identification of the first online IP address and the time and date of the online activity, and (d) as a result of which delivery, a first television advertisement can be directed to a set-top box for presentation via that set-top box, selectively, wherein the set-top box is indicated by the set-top box identifier that the server associates with the online user interface device identifier of a first user's online user interface device."**

433. Claim 38 is largely identical to claim 26, except that claim 38 recites identifier-based associations, whereas claim 26 recites IP address-based associations4. *See* Section XII.B.1, above. Ex. 1101, claims 26 and 38; Ex. 1115. The same differences that distinguish claim 61 from claim 1 also distinguish claim 38 from claim 26. *See* Sections XII.A.1, XII.A.2, XII.B.1, above. Ex. 1101, claims 1, 26, 38, and 61; Ex. 1115. Namely, claims 1 and 26 recite IP address-based associations, while claims 38 and 61 recite identifier-based associations. *Id.*

[4] The same difference distinguishes claim 61 from claim 1.

434. Thus, for at least the same reasons as claims 26 and 61, Madhavan in view of Park and Martinez and Madhavan in view of Park, Kato, and Martinez also teaches independent claim 38, because, as explained above, the prior art teaches associations based on device identifiers (e.g., IP addresses, MAC addresses). *Id.* The inclusion of Martinez's teachings does not affect this analysis.

435. Therefore, because Madhavan in view of Park and Martinez and Madhavan in view of Park, Kato, and Martinez teaches all limitations of claim 38, it is my opinion that claim 38 would have been obvious to a POSA.

3. Dependent Claim 15: "The method of claim 1 wherein: (i) the user profile information in part (b) includes a list of online access IP addresses corresponding to specific online activities and times and dates corresponding to each of the online activities; and (ii) the computer system causes the television advertisement to be directed to the set-top box of one of the users only if any of the listed online access IP addresses corresponding to the specific online activities and the corresponding dates and times of the online activities match the common IP address assigned to that user and the date and time corresponding thereto."

436. Claim 15 of the '260 Patent depends from claim 1 and further requires "wherein: (i) the user profile information in part (b) includes a list of online access IP addresses corresponding to specific online activities and times and dates corresponding to each of the online activities" (e.g., Element [15A]) and "(ii) the computer system causes the television advertisement to be directed to the set-top box of one of the users only if any of the listed online access IP addresses corresponding

to the specific online activities and the corresponding dates and times of the online activities match the common IP address assigned to that user and the date and time corresponding thereto" (e.g., Element [15B]). Ex. 1101, claim 15. As discussed above, claim 1, from which claim 15 depends is taught by Madhavan-Park and Madhavan-Park-Kato.

437. With regard to Element [15A], as is discussed above for Element [26C], Madhavan-Park-Martinez and Madhavan-Park-Kato-Martinez teaches that the user profile information includes online access IP addresses with specific online activities, and their corresponding times and dates. *See* Section XII.B.1.d. Accordingly, it is my opinion that Element [15A] is taught by Madhavan-Park-Martinez and Madhavan-Park-Kato-Martinez for at least similar reasons as those discussed above for Element [26C].

438. With regard to Element [15B], as I explained above for claim 1, in Madhavan-Park and Madhavan-Park-Kato, a common IP address associated with a user (the public IP address of the IP sharing router) is matched to the IP address of a user's device (e.g., client machine 230). *See* Section XII.A.1. Furthermore, in Madhavan-Park and Madhavan-Park-Kato, data from that user's device is stored in a corresponding profile for the user. *Id.* Accordingly, it is my opinion that a POSA would understand that there is a match between the claimed "**online access IP addresses**" and "**the common IP address**." Targeted advertisements may be

selected, based on this stored user profile data, and sent to a set-top box associated with the same common IP address. Section XII.A.1.b; Ex. 1162, 5:53-66, 7:33-53, 8:9-15, 8:57-67, 9:36-40, 10:10-25. In the proposed combinations, temporal data (claimed "**corresponding dates and times of the online activities**") is also stored in the user profile. For example, there is a match between these dates and times for client machine 130 and the date and time the common IP address is assigned to the user (claimed "**match … the date and time corresponding [to the common IP address assigned to the user]**"). For example, because the user's IP shared router uses the common IP address, this common IP address is also assigned to the user's client machine 130 when it is accessing the network via the user's IP shared router.

439. Moreover, Martinez teaches targeting advertisements based on time and date, as I described above for Element [26C]. Ex. 1165, ¶¶ [0047], [0049]-[0051], [0090], [0105], Table 1; Section XII.B.1.d. For example, Martinez describes sending a targeted advertisement to a user based on temporal data (including a current time) and spatial information (indicating a current location and IP address) to send a targeted advertisement to a user. Ex. 1165, ¶¶ [0006], [0012], [0050], [0067], [0090]. Accordingly, it is my opinion that the combined system of Madhavan-Park-Martinez teaches matching the time/date of the user's network access (claimed "**corresponding dates and times of the online activities**") to the

current date/time information at the network ("**the date and time corresponding [to the common IP address]**").

440. Using this time/date information of Martinez would be obvious to a POSA because it would allow advertisers to better target their advertisements. For example, a POSA would have recognized the importance of considering a user's time/date information in the selection of targeted advertisements, as in some instances, an advertiser may want to send advertisements based on, e.g., a user's recent activity, which is already contemplated in Madhavan. For the same reasons that I discussed regarding Element [26C], a POSA would have found this combination obvious as using the known technique of Martinez's use of temporal data to select targets advertisements to improve Madhavan's combined systems in the same way, so that advertisements are further selected on a user's temporal data to improve its relevance and effectiveness. The systems are also similar because both target advertisements based on user profiles. Ex. 1162, 1:7-11, 1:36-2:3, Abstract; Ex. 1165, [0001]-[0006], [0046]-[0048].

441. Accordingly, as shown above, Madhavan-Park-Martinez and Madhavan-Park-Kato-Martinez teach the additional limitations included in dependent claim 15, and renders claim 15 obvious to a POSA.

4. **Dependent Claim 94: "The method of claim 61 wherein: (i) the user profile information in part (b) includes a list of online access IP addresses corresponding to specific online activities and times and dates corresponding to each of the online activities; and (ii) the computer system causes the television advertisement to be to be directed to the set-top box of one of the users only if any of the listed online access IP addresses corresponding to the specific online activities and the corresponding dates and times of the online activities match the common IP address assigned to that user and the date and time corresponding thereto."**

442. Except for their dependencies, claims 94 and 15 are identical. *See* Ex. 1101, claim 15. Therefore, it is my opinion that a POSA would have found claim 94 obvious in view of Madhavan-Park-Martinez and Madhavan-Park-Kato-Martinez for the same reasons as claim 15. *See* Section XII.B.3, above.

5. **Dependent Claim 16: "The method of claim 15 wherein part (a) comprises the act of storing the common IP address and dates and times corresponding thereto in the computer system, and further comprising, with the computer system, periodically updating (i) the common IP address and times and dates corresponding thereto or (ii) the list of online access IP addresses corresponding to specific online activities and time and dates corresponding to each of the online activities."**

443. Claim 16 of the '260 Patent depends from claim 15 and further requires "wherein part (a) comprises the act of storing the common IP address and dates and times corresponding thereto in the computer system, and further comprising, with the computer system, periodically updating (i) the common IP address and times and dates corresponding thereto or (ii) the list of online access IP addresses corresponding to specific online activities and time and dates corresponding to each

of the online activities." Ex. 1101, claim 16. As discussed above, claim 15 is taught by Madhavan-Park-Martinez and Madhavan-Park-Kato-Martinez. *See* Section XII.B.3.

444. Madhavan-Park-Martinez and Madhavan-Park-Kato-Martinez teach user profiles storing identification information (device identifiers such as IP addresses), online activity data associated with the identification information, and timestamp data for the online activity data, as I discussed above with regard to Element [15A]. *See* Section XII.B.3; Ex. 1162, 3:1-8, 5:53-6:12, 7:33-36, 8:9-25, 10:3-25, Figs. 6, 8, 9, 10; Ex. 1165, ¶¶ [0036]-[0040], [0049]-[0051], [0058], [0070], [0102]-[0103]. For example, Madhavan describes that "the actions of the user 110 are collected in data logs for further processing, and are associated with the respective user identification information, such as the unique IP address." Ex. 1162, 7:33-36. Similarly, Martinez describes storing temporal data, such as time stamps, which may e.g., be collected based on a local clock, network clock, or the like. Ex. 1165, ¶ [0040].

445. In the combined system, Madhavan's user devices each communicate with content server 100 using the public IP address of Park's IP sharing router. Ex. 1163, ¶¶ [0003], [0009]-[0016], [0029]-[0030], [0038]; *See* Section XII.A.1.b. For example, as described in Park, if a user device desires to transmit data to an external device through the Internet, it cannot directly use its private IP address, and instead

would use the public IP address of the IP sharing router. Ex. 1163, ¶ [0038]. In Madhavan, a corresponding user profile is supplemented with updated identification information (such as IP address, port number, MAC address) and corresponding online activity data (**"periodically updating… the common IP address … [or] the list of online access IP addresses corresponding to specific online activities"**), each time a user device accesses the content server 100. Ex. 1162, 3:1-8, 5:53-6:12, 7:33-36, 8:9-25, 10:3-25, Figs. 6, 8, 9, 10. For example, as noted above, in Madhavan, "the actions of the user 110 are collected in data logs for further processing, and are associated with the respective user identification information, such as the unique IP address and/or password information." Ex. 1162, 7:33-36. Further, in Martinez, timestamp data corresponding to the online activities is collected and periodically stored in the user profile. Ex. 1165, ¶¶ [0006], [0007], [0046], [0049], [0051], [0068], [0099], [0100].

446. Accordingly, as shown above, Madhavan-Park-Martinez and Madhavan-Park-Kato-Martinez teach the additional limitations included in dependent claim 16, and renders claim 16 obvious to a POSA.

6. Dependent Claim 95: "The method of claim 94 wherein part (a) comprises the act of storing in the computer system the common IP address and dates and times corresponding thereto, and further comprising periodically updating (i) the common IP address and times and dates corresponding thereto or (ii) the list of online access IP addresses corresponding to specific online activities and time and dates corresponding to each of the online activities."

447. Except for their dependencies and some insubstantial wording changes, claim 95 is nearly identical to claim 16. *See* Ex. 1101, claim 16. As I explained above at Section XII.B.4, claim 94 is taught by Madhavan-Park-Martinez and Madhavan-Park-Kato-Martinez. Claim 95 requires that the storing be done "**in the computer system**" while claim 16 requires that the updating be done "with the computer system." Ex. 1101, claims 16, 95. It would have been obvious to a POSA that the limitations of claims 16 and 95 are both performed by Madhavan's processing servers 104, which are coupled to the data storage module 106 for the reasons described above at Sections XII.B.5 and XII.B.4. Thus, it is my opinion that a POSA would have found claim 95 obvious in view of Madhavan-Park-Martinez and Madhavan-Park-Kato-Martinez for the same reasons as claim 16. *See* Section XII.B.5.

7. Dependent Claim 24: "The method of claim 1 further comprising receiving a revenue amount as a result of directing the advertisement."

448. Claim 24 of the '260 Patent depends from claim 1 and further requires "receiving a revenue amount as a result of directing the advertisement." Ex. 1101,

claim 24. As discussed above, claim 1 is taught by Madhavan in view of Park and Madhavan in view of Park and Kato. *See* Section XII.A.1.

449. As I explained above at Section XII.A.1.c with respect to element [1B], Madhavan in view of Park and Madhavan in view of Park and Kato teach directing targeted advertisements to users via Park's IP sharing router. Section XII.A.1.c; Ex. 1162, Abstract, 1:7-11, 1:46-54, 3:55-63, 9:4-8, 9:36-67, 12:1-20, Fig. 6; Ex. 1163, ¶¶ [0031], [0035]-[0038]. Claim 24 requires the computer system to "receiv[e] a revenue amount as a result of directing the advertisement." It is my opinion that both Madhavan-Park and Madhavan-Park-Kato in further view of Martinez render this additional limitation obvious to a POSA.

450. Madhavan already discloses that other network entities, such as advertisers, may interact and access entity 100. Ex. 1162, 4:65-5:2, 5:18-27. Similarly, Martinez discloses a system in which "a user profile is maintained and media is delivered to a mobile electronic device associated with the user profile." Ex. 1165, ¶ [0001]; *see also id.*, Abstract, ¶¶ [0004], [0010], [0035], [0046], [0058]. Martinez also provides the opportunity for "one or more third parties (e.g., one or more vendors), who may provide compensation for the right to present media to the users associated with selected user profiles." Ex. 1165, ¶¶ [0047]-[0048], [0073]-[0074], [0076], [0110], [0123]-[0124], [0127]. For example, Martinez explains that "[coffee] vendors may bid for the right to display a coffee advertisement … during

the times that those users normally purchase coffee and with respect to locations that those users normally frequent, such as determined using one or more of spatial data, temporal data and interaction data. Upon receiving a winning bid, the media display module 24 may present the appropriate media for display via the media output device 40." Ex. 1165, ¶¶ [0047], [0123], [0127], [0129]. Thus, it is my opinion that Martinez discloses a system "receiving a revenue amount as a result of directing the advertisement."

451. Although not required by claim 24, I have been asked to consider a scenario where the revenue of claim 24 is required to be received "automatically," as some similar claims (claims 34 and 42) in the '260 Patent require. The '260 Patent describes something happening "automatically," for example, as something that is preprogrammed so as to not require user interaction. Ex. 1101, 5:64-67, 11:36-42. It is my opinion that Martinez also teaches automatically receiving the revenue described above. Martinez's system automatically chooses which advertisements to show and automatically displays them. Ex. 1165, [0072], [0075], [0083]. Similarly, a POSA would find it obvious for Martinez's system to "automatically" receive revenue from the advertisers, such as from the winner of the bidding process described above, upon the direction of the television advertisement.

452. A POSA would have found it obvious to modify Madhavan-Park's or Madhavan-Park-Kato's system to include Martinez's third-party vendor payment

system because it would allow the implementation of Madhavan's disclosure of its system interacting with advertisers so that its system would receive compensation from advertisers for the direction of specific advertisements. Ex. 1162, 4:65-5:2, 5:18-27. This would have been nothing more than applying a known technique to a known method ready for improvement to yield predictable results. Specifically, the known technique would be Martinez's method of receiving compensation from an advertiser for directing an advertisement. The known method would be Madhavan-Park's or Madhavan-Park-Kato's method of targeting advertisements, and as I discussed above, Madhavan already discloses that advertisers may interact and access entity 100. Ex. 1162, 4:65-5:2, 5:18-27. Thus, it is my opinion that Madhavan-Park's and Madhavan-Park-Kato's systems, as modified by Martinez, would receive compensation from advertisers for directing advertisements.

453. A POSA would have had the skills, knowledge, and a reasonable expectation of success to modify Madhavan-Park's and Madhavan-Park-Kato's system to include Martinez's third-party vendor payment system because it would have merely required routine programming modifications to the system.

454. Accordingly, it is my opinion that Madhavan-Park-Martinez and Madhavan-Park-Kato-Martinez teach the additional limitations included in dependent claim 24 and render claim 24 obvious to a POSA.

8. Dependent Claim 25: "The method of claim 1 further comprising paying a revenue amount to a profile provider as a result of using the user profile information in part (b)."

455. Claim 25 of the '260 Patent depends from claim 1 and further requires "paying a revenue amount to a profile provider as a result of using the user profile information in part (b)." Ex. 1101, claim 25. As discussed above, claim 1 is taught by Madhavan in view of Park and Madhavan in view of Park and Kato. *See* Section XII.A.1. Madhavan discloses that other network entities may interact and access entity 100. Ex. 1162, 4:65-5:2, 5:18-27. For example, Madhavan describes that other network entities may access the network-based entity 100, such as for example, advertising entities that "communicate with the web servers 102 and the advertising servers 104 to transmit advertisements to be displayed for the user." Ex. 1162, 5:18-27, Fig. 2. Madhavan, however, does not explicitly disclose paying a revenue amount to a profile provider for using the user profile information. Ex. 1162, 4:65-5:2, 5:18-27.

456. Martinez discloses a system in which "a user profile is maintained and media is delivered to a mobile electronic device associated with the user profile." Ex. 1165, ¶ [0001]; *see also id.*, Abstract, ¶¶ [0004], [0010], [0035], [0046], [0058]. Specifically, Martinez teaches "the management module 20 receives electronic data from the data gathering module (e.g., via wireless communication) and manages the user profile 30 (e.g., creates and/or updates the user profile 30)." Ex. 1165, ¶ [0046];

see also id., Abstract, ¶¶ [0001], [0004]-[0006], [0009], [0043], [0048]-[0049], [0059], [0067], [0074], [0085], [0100].

457. Martinez also discloses collecting user profile information from a wide variety of sources, such as "receiving third party data from at least one third party, the third party data including at least one of temporal data, spatial data and interaction data and authenticating at least one of the electronic device data and the third party data." Ex. 1165, ¶ [0007]; *see also id.*, ¶¶ [0005], [0010], [0048], [0109], [0119]-[0123], [0128], Figs. 10e-10i. Martinez identifies the benefit of collecting this third-party user profile information resulting in "more accurate user profiles." Ex. 1165, ¶ [0120]; *see also id.*, ¶¶ [0005], [0007], [0064]-[0068], [0128], Figs. 10e-10i. Martinez describes that compensation is provided to such third-party profile providers in exchange for collecting, maintaining, and sharing additional user profile information. Ex. 1165, ¶ [0120]. More specifically, in Martinez, such compensation may be provided as part of a compensation arrangement such as a "joint data sharing arrangement, wherein the maintainer of the user profiles agrees to provide a portion of the user profile to the business in return for an agreement by the business that it will share at least some of its collected user information." Ex. 1165, ¶ [0120]. Thus, in my opinion, Martinez discloses a system "paying a revenue amount to a profile provider as a result of using the user profile information."

458. It is my opinion that a POSA would have had the skills, knowledge, and motivation to modify Madhavan-Park and Madhavan-Park-Kato to incorporate Martinez's method of paying a revenue amount to a profile provider as a result of using the user profile information in order to implement Madhavan's disclosure that other network entities may interact and access its system. Ex. 1162, 4:65-5:2, 5:18-27. Paying a profile provider (as taught in Martinez) would allow for the collection and use of third-party user profile information, thereby generating "more accurate user profiles." Ex. 1165, ¶ [0120]; *see also id.*, ¶ [0128].

459. It is also my opinion that a POSA would be motivated to modify Madhavan-Park and Madhavan-Park-Kato with Martinez's teachings of paying a profile provider to use user profile information as it would have been simply the use of known techniques to improve similar methods in the same way. Specifically, the known technique would be Martinez's method of payment to a profile provider that independently collects third-party data to generate more accurate user profiles (which may, e.g., be used to provide better targeted advertisements). Ex. 1165, ¶ [0120]. It is my opinion that this technique would be used to improve Madhavan-Park's and Madhavan-Park-Kato's targeted advertising methods (e.g., similar methods) in the same way. For example, the resulting system would achieve more accurate user profiles by compensating third-party profile providers for additional user profile information. For example, by enabling the generating a more accurate

and comprehensive depiction of a given user, a more tailored advertisement would be selected on that user's behalf. *Id*.

460. Furthermore, A POSA would have been motivated and had the skills to implement the combination with a reasonable expectation of success. For example, it would have been straightforward to program Madhavan-Park and Madhavan-Park-Kato's system to access the user profiles generated by an independent profile generation and management system and to provide compensation for that access. Furthermore, paying for and receiving this additional user profile information from a profile provider would have merely required routine programming modifications to the system.

461. Accordingly, it is my opinion that Madhavan-Park-Martinez and Madhavan-Park-Kato-Martinez teach the additional limitations included in dependent claim 25 and render claim 25 obvious to a POSA.

9. Dependent Claim 104: "The method of claim 61 further comprising paying a revenue amount to a profile provider as a result of using the user profile information in part (b)."

462. Claim 104 of the '260 Patent depends from claim 61 and further requires "paying a revenue amount to a profile provider as a result of using the user profile information in part (b)." Ex. 1101, claim 104. As I discussed above, claim 61 is taught by Madhavan in view of Park and Madhavan in view of Park and Kato. *See* Section XII.A.2.

463. I note that, other than their dependencies, claim 104 is identical to claim 25. Therefore, it is my opinion that a POSA would have found claim 104 obvious in view of Madhavan-Park-Martinez and Madhavan-Park-Kato-Martinez for the same reasons as claim 25. *See* Section XII.B.8.

10. Dependent Claims 27 and 148

464. Except for their dependencies and the change from "first online access IP address/set-top box IP address" to "online user interface device identifier/set-top box identifier" (claim 148), claims 2, 27, and 148 are nearly identical. *See* Ex. 1101, claims 2, 27, 148. As I described above with respect to claim 61, a POSA would have found "online access IP addresses" obvious for the same reasons as "online user interface device identifiers." *See* Section XII.A.2, above. Thus, it is my opinion that a POSA would have found claims 27 and 148 obvious for the same reasons as claim 2. *See* Section XII.A.3, above. In my opinion, the independent operation of the computer equipment and computer system in the Madhavan-Park-Martinez and Madhavan-Park-Kato-Martinez systems does not change my analysis above.

11. Dependent Claim 28: "The method of claim 26:"

465. As discussed above, claim 26, from which claim 28 depends is taught by Madhavan-Park-Martinez and Madhavan-Park-Kato-Martinez.

a) [28A]: "wherein delivered user profile information of a second user of the multitude of users (i) is derived from online activity of the second user from a second online user interface device via a second online access IP address and (ii) includes identification of the second online access IP address and the time and date of the online activity,"

466. Claim element [28A] simply recites the same processes as claim element [26C] which is taught by Madhavan-Park-Martinez and Madhavan-Park-Kato-Martinez, but for a second user using second online user interface device and a second online access IP address for similar reasons as those discussed above for Element [1B] and claims 3 and 60. *See* Sections XII.A.1.c, XII.A.5, XII.A.55. As I discussed above with regard to claims 1, 3, and 26, Madhavan-Park, Madhavan-Park-Kato, Madhavan-Park-Martinez, and Madhavan-Park-Kato-Martinez discloses an advertising system that is configured to provide targeted advertising to client devices across geographical locations. *See* Sections XII.A.1, XII.A.5, XII.B.1; Ex. 1162, 1:7-11, 1:46-54, 3:55-63, 5:59-66, 9:4-8, 9:36-67, 12:1-20, Figs. 3 and 11. Madhavan explains that the system may handle advertising for multiple different users (e.g., "one or more user entities 110") based on user profile information for each entity. Ex. 1162, 4:37-42, 5:53-6:19. For example, Madhavan describes, and illustrated in Figure 3, storing user profile information each of multiple entities 110. Ex. 1162, 5:53-6:19, Fig. 3.

467. Additionally, each of the user entities may be associated with their own (i.e., different) online interface devices, and those devices may access the internet from different locations (e.g., different user access locations indicated by different geographic data) via different IP addresses. Ex. 1162, 1:46-54, 4:37-42, 5:53-6:19, 9:4-8, 9:36-67, Fig. 3. Accordingly, a POSA would recognize that Madhavan teaches that the same advertising processes are performed for each of the multiple user entities 110 using similar profile information. For example, like for the first user entity (Section XII.A.1.b-c), advertisements would be delivered to the second user entity's client machine (a "second online user interface device") using the same processes I explained for claim 1, including advertisement selection based on the second user entity's user profile information. Ex. 1162, Abstract, 1:7-11, 1:38-54, 3:55-63, 5:59-66, 9:4-8, 12:1-20, Fig. 11; Section XII.A.1, above.

468. As I also discussed with respect to claims 1 and 26, Madhavan-Park-Martinez and Madhavan-Park-Kato-Martinez teaches user profile information being derived from online activity and that the user profile information includes an IP address, time, and date of the online activity. Ex. 1162, Abstract, 1:38-46, 2:62-3:55, 5:53-6:50, 8:37-9:3; Ex. 1165, Table 1, Table 3, ¶¶ [0004], [0006], [0037]-[0038], [0040], [0049], [0051], [0057]-[0059], [0084], [0100], [0102]-[0103]. A POSA would have recognized the same user profile information and profile information derivation process would apply to a second interface device of a second

user accessing the internet through a second online access IP address (e.g., at a second location). *Id.* Accordingly, user profile information would be similarly derived for a second user based on online activity of the second user from a second online user interface device via a second online access IP address, including time, date, and IP address of the online activity. *Id.*

469. Therefore, it is my opinion that Madhavan-Park and Madhavan-Park-Martinez (and thus Madhavan-Park-Martinez and Madhavan-Park-Kato-Martinez) teaches "wherein delivered user profile information of a second user of the multitude of users (i) is derived from online activity of the second user from a second online user interface device via a second online access IP address and (ii) includes identification of the second online access IP address and the time and date of the online activity," as required by claim element [28A].

b) [28B]: "as a result of which delivery, a second television advertisement, different from the first television advertisement, is directed to a second set-top box for presentation via that set-top box, selectively, wherein the second set-top box is indicated by the set-top box IP address that the server associates with the second online access IP address, for selective presentation via that set-top box, and"

470. Madhavan-Park-Martinez and Madhavan-Park-Kato-Martinez also teach element [28B] for substantially the same reasons that Madhavan-Park, Madhavan-Park-Kato, Madhavan-Park-Martinez, and/or Madhavan-Park-Kato-Martinez teach elements [26D], [1B] and claim 3 (which recite, e.g., substantially

the same targeted advertisement direction process as is described in [28B]). Sections XII.B.1.e, XII.A.1.c, XII.A.5. As discussed for claim element [28A], Madhavan-Park-Martinez and Madhavan-Park-Kato-Martinez teaches performing the same targeted advertisement processes for a second device having a second IP address as for a first device and first IP address, including directing a second television advertisement different from the first advertisement, to a second set-top box. Section XII.B.11.a; Ex. 1162, Abstract, 1:7-11, 1:46-54, 3:55-63, 9:4-8, 12:1-20, Fig. 11. For example, just as Madhavan-Park-Martinez and Madhavan-Park-Kato-Martinez teaches a first set-top box IP address being associated with the IP address of a first IP sharing router and first client machine as I explained above with respect to claims 1 and 26, so too would the IP address of the second set-top box and a second IP sharing router and a second client machine (claimed "wherein the second set-top box is indicated by the set-top box IP address that the server associates with the second online access IP address"). Sections XII.A.1 and XII.B.1; Ex. 1162, 5:43-66, 7:15-19, 7:33-55, 8:57-67, 9:18-25, 9:36-40, 10:3-25; Ex. 1163, ¶¶ [0010]-[0011], [0035]-[0038] (describing use of an IP sharing router with a common IP address which associates router-connected devices); Ex. 1164, ¶¶ [0031]-[0038], [0040]-[0041]; *see* Ex. 1101, 12:54-58, 13:41-43.

471. Additionally, a POSA would have recognized that when the user profile information of a second user is different from that of a first user, the selected

advertisement (i.e., claimed "second television advertisement") would be different from an advertisement selected for the first user (i.e., claimed "different from the first television advertisement"). Moreover, Madhavan teaches that each entity's user profile information may differ based on a variety of activities such as a geographic location and behavioral information such as online user activities ("online activity"). Ex. 1162, 5:53-6:19, Fig. 3. Accordingly, a POSA would have recognized that if the user profile information is different between entities, different advertisements may be selected and directed to those entities' devices in light of the differences in their profiles. Ex. 1162, Abstract, 1:7-11, 1:46-54, 3:55-63, 9:4-8, 9:36-67, 12:1-20, Fig. 11. For example, a first entity's profile information may indicate frequent network access from coffee shops at their client machine 130, while a second entity's profile information may indicate frequent access from bookstores from their own client machine 130. In this example, Madhavan's system would target advertisements to the first entity's media device 140 (STB), based on the first entity's apparent like of coffee, while targeting advertisements to the second entity's media device 140 (STB) based on his or her interest in books.

472. Therefore, it is my opinion that Madhavan-Park-Martinez and Madhavan-Park-Kato-Martinez teaches "as a result of which delivery, a second television advertisement, different from the first television advertisement, is directed to a second set-top box for presentation via that set-top box, selectively, wherein the

second set-top box is indicated by the set-top box IP address that the server associates with the second online access IP address, for selective presentation via that set-top box, and" as is required by claim element 28[B].

c) [28C] "wherein which television advertisement is directed to or presented via which set-top box depends on differences between the online activities from the first and second online user interface devices, respectively."

473. Except for their dependencies, claim element [28C] is identical to claim element [3B]. The addition of Martinez does not alter my opinion that the elements of claim 3 are rendered obvious by Madhavan-Park and Madhavan-Park-Kato. Thus, claim element [28C] (i.e., "wherein which television advertisement is directed to or presented via which set-top box depends on differences between the online activities from the first and second online user interface devices, respectively") is rendered obvious by Madhavan-Park-Martinez and Madhavan-Park-Kato-Martinez for substantially the same reasons as claim element 3(ii), in view of the analysis for claim 26. *See* Sections XII.B.1 and XII.A.5; Ex. 1162, 1:46-54, 9:4-8, 9:36-67; *see also id.*, Abstract, 1:7-11, 3:55-63, 12:1-20, Fig. 11.

474. Accordingly, as shown above, Madhavan-Park-Martinez and Madhavan-Park-Kato-Martinez teach the additional limitations included in dependent claim 28, and renders claim 28 obvious to a POSA.

12. Dependent Claim 151: "The method of claim 38: (e) wherein delivered user profile information of a second user of the multitude of users (i) is derived from online activity of the second user from the second user's online user interface device via a second online access IP address and (ii) includes identification of the second online access IP address and the time and date of the online activity, (f) as a result of which delivery, a second television advertisement, different from the first television advertisement, is directed to a second set-top box for presentation via that set-top box, selectively, wherein the second set-top box is indicated by the set-top box identifier that the server associates with the second online user interface device identifier of the second user's online user interface device, for selective presentation via that set-top box, and (g) wherein which television advertisement is directed to or presented via which set-top box depends on differences between the online activities from the first and second online user interface devices, respectively."

475. Except for their dependencies and the change from "set-top box IP address" to "set-top box identifier," claims 28 and 151 are identical. See Ex. 1101, claim 28. Therefore, it is my opinion that a POSA would have found claim 151 obvious in view of Madhavan-Park-Martinez and Madhavan-Park-Kato-Martinez for the same reasons as claim 28. *See* Section XII.B.1, XII.B.11, above.

13. Dependent Claim 29: "The method of claim 26 further comprising receiving a revenue amount from a proprietor of the computer system as a result of the electronic delivering act."

476. Claim 29 of the '260 Patent depends from claim 26 and further requires "receiving a revenue amount from a proprietor of the computer system as a result of the electronic delivering act." Ex. 1101, claim 29. As I discussed above, claim 26

is taught by Madhavan-Park-Martinez and Madhavan-Park-Kato-Martinez. *See* Section XII.B.1.

477. More specifically, as I discussed in Section XII.B.1.b, the Madhavan-Park-Martinez and Madhavan-Park-Kato-Martinez combinations teach Madhavan's webservers 102 (part of the "computer equipment") electronically deliver user profile information to the respective computer system of Madhavan-Park-Martinez and Madhavan-Park-Kato-Martinez, which manages user profiles and is operated by an entity independent of the respective Madhavan-Park-Martinez and Madhavan-Park-Kato-Martinez computer equipment.

478. Martinez also discloses compensating parties for the collection of user electronic data ("user profile information"). Ex. 1165, ¶¶ [0010], [0109], [0115], [0121]. In my opinion, Madhavan-Park-Martinez and Madhavan-Park-Kato-Martinez teach the computer equipment to receive a revenue from the proprietor of the computer system for the act of collecting and delivering the user profile information, which allows for more accurate profiles. Ex. 1165, ¶ [0120]. This compensation would have incentivized data gathering, and similar to my discussion regarding element [26A], a POSA would have been motivated to been motivated to make this modification as it would produce more accurate user profiles to allow for more accurate better targeting, and thus better monetization. Section XII.B.1.b. For example, such compensated data gathering would result in higher quality and more

comprehensive user profiles, which would e.g., better inform the advertisement selection process. Similarly, because such targeted ads would be more effectively tailored to the recipients, they would ultimately lead to higher monetization. This modification would have just required routine programming modifications to the system, which a POSA would have the skills and knowledge to perform. Thus, Madhavan-Park-Martinez and Madhavan-Park-Kato-Martinez teach the computer equipment "receiving a revenue amount from a proprietor of computer system as a result of the electronic delivering act."

479. Accordingly, it is my opinion that Madhavan-Park-Martinez and Madhavan-Park-Kato-Martinez teach the additional limitations included in dependent claim 29 and render claim 29 obvious to a POSA.

14. Dependent Claim 31: "The method of claim 26 further comprising, with the computer equipment, automatically selecting the first television advertisement based on the user profile information."

480. Claim 31 of the '260 Patent depends from claim 26 and further requires "further comprising, with the computer equipment, automatically selecting the first television advertisement based on the user profile information." Ex. 1101, claim 31. As discussed above, claim 26, from which claim 31 depends, is taught by Madhavan-Park-Martinez and Madhavan-Park-Kato-Martinez.

481. As I explained for claim elements [26A] and [26D], Madhavan's webservers 102, advertising servers 105, and advertising storage module 108 teach

the recited "computer equipment." Sections XII.B.1.b, XII.B.1.e. In Madhavan-Park-Martinez and Madhavan-Park-Kato-Martinez, user profile information, such as identification information, content classification categories, or the like, is received at the advertising servers (e.g., part of the claimed "computer equipment") from the processing servers 104. Sections XII.B.1.b, XII.B.1.e. For example, Madhavan discloses advertising servers 105 receiving user profile information and retrieving advertisements related to the user profile information to be directed to the media device 140. Ex. 1162, 9:36-67, 11:44-67, Figs. 6, 10. Madhavan describes this matching of advertisements with user profile information as being "automatic." Ex. 1162, 4:27-36. For example, in Madhavan, the described matching does not require a user request, and is instead based on the programming of advertising servers 105.

482. Therefore, it is my opinion that Madhavan-Park-Martinez and Madhavan-Park-Kato-Martinez teach "with the computer equipment, automatically selecting the first television advertisement based on the user profile information," as required by claim 31.

15. Dependent Claims 32 and 145

483. Except for their dependencies, claim 32 is identical to claim 9. *See* Ex. 1101, claim 32. The addition of Martinez does not change the obviousness analysis of the elements recited in claim 9. Therefore, it is my opinion that a POSA would have found claim 32 obvious in view of Madhavan-Park-Martinez and Madhavan-

Park-Kato-Martinez for substantially the same reasons as claim 9. *See* Section XII.A.16, above.

484. Except for their dependencies, claim 145 is nearly identical to claim 9, and thus it is my opinion that a POSA would have found claim 145 obvious in view of Madhavan-Park-Martinez and Madhavan-Park-Kato-Martinez for substantially similar reasons as claim 9. *See* Section XII.A.16, above. For example, both claims require that the user profile information comprise/include demographic attributes. Madhavan teaches that the demographic information may be collected by content server 100, which is connected to the internet 120 and includes one or more web servers 102. Ex. 1162, 4:26-5:36, Figs. 1, 2. Within content server 100, user profile information is stored, including demographic data about the user. Ex. 1162, 5:37-6:2. A POSA would have understood that because Madhavan teaches collecting demographic data about the user and that the collecting content server 100 is connected to the client through the internet, that the demographic information is "collected through an Internet site accessed with the online user interface device of the first user," as required in claim 145. Indeed, Madhavan teaches that user profile information may be collected through a website using a user's client machine. Ex. 1162, 8:1-8 (describing transmission of user inputs and actions, including sponsored listing clicks and page views through a web server). Therefore, it is my opinion that a POSA would have found "wherein the user profile information derived from the

online activity comprises demographic attributes collected through an Internet site accessed with the online user interface device of the first user" as required in claim 145 obvious for similar reasons as described above with respect to claim 9 and my further explanation here. *See* Section XII.A.16 above.

16. Dependent Claims 34, 42, and 103

485. Except for from their dependencies, claims 34, 42, and 103 are nearly identical to claim 24. *See* Ex. 1101, claims 34, 42, and 103. For example, claims 24 and 103 require the computer system to "receiv[e] a revenue amount as a result of directing the advertisement." As I explained above at Section XII.A.2, claim 61, from which claim 103 depends, is taught by Madhavan-Park and Madhavan-Park-Kato for the same reasons as claim 1, from which claim 24 depends. Therefore, it is my opinion that a POSA would have found claim 103 obvious in view of Madhavan-Park-Martinez and Madhavan-Park-Kato-Martinez for the same reasons as claim 24. *See* Section XII.B.7, above.

486. Claims 34 and 42 similarly require the computer system to "automatically receiv[e] a revenue amount as a result of direction of the first television advertisement." As I described with respect to claim 24, it would have been obvious to a POSA that teaches "automatically" performing the limitations of claim 24. As I explained above at Sections XII.B.1-2, claims 26 and 38, from which claims 34 and 42 depends, are taught by Madhavan-Park-Martinez and Madhavan-

Park-Kato-Martinez. Thus, for the same reasons discussed regarding claim 24, it is my opinion that a POSA would have found it obvious to modify Madhavan-Park-Martinez and Madhavan-Park-Kato-Martinez with Martinez's third-party automatic vendor payment system.

487. Therefore, it is also my opinion that a POSA would have found claims 34 and 42 obvious in view of Madhavan-Park-Martinez and Madhavan-Park-Kato-Martinez for the same reasons as claim 24. *See* Section XII.B.7, above.

17. Dependent Claims 39 and 147

488. Except for their dependencies, claims 39 and 147 are identical to claim 31. See Ex. 1101, claims 39 and 147. As I explained above, Madhavan-Park-Martinez and Madhavan-Park-Kato-Martinez render independent claim 38 and dependent claim 42 obvious. Sections XII.B.2 and XII.B.16. The addition of Martinez to Madhavan as modified by Park does not change the obviousness of the elements recited in claim 31. Therefore, it is my opinion that a POSA would have found claims 39 and 147 obvious in view of Madhavan-Park-Martinez, and Madhavan-Park-Kato-Martinez as well for substantially the same reasons as claim 31. See Section XII.B.14, above.

18. Dependent Claim 33: "The method of claim 26 further comprising receiving a revenue amount from a provider of the television advertisement as a result of electronically delivering the user profile information."

489. Claim 33 of the '260 Patent depends from claim 26 and further requires "receiving a revenue amount from a provider of the television advertisement as a result of electronically delivering the user profile information." Ex. 1101, claim 33. As I discussed above, claim 26 is taught by Madhavan-Park-Martinez and Madhavan-Park-Kato-Martinez. *See* Section XII.B.1. As I discussed in Section XII.B.1.b, Madhavan-Park-Martinez and Madhavan-Park-Kato-Martinez teach electronically collecting and delivering user profile information for selecting and presenting targeted advertisements. And as I discussed regarding claim 24, advertisers can pay for the direction of their advertisements. Section XII.B.7. In claim 29, I also discussed that the computer equipment can receive payment for providing data. Section XII.B.13. Claim 33 merely requires that the advertiser pays the computer equipment for delivering the user profile information that is used to select and direct it's advertisements. Martinez teaches advertisers paying the computer equipment for the data. Ex. 1165, ¶¶ [0010], [0109], [0115], [0121].

490. In my opinion, a POSA would have been motivated to add this compensation structure to Madhavan-Park-Martinez and Madhavan-Park-Kato-Martinez to incentivize the collection of useful (e.g., more extensive) user profile information, which leads to "more accurate user profiles," and thus better targeted

advertising (and likewise to additional monetization). Section XII.B.1; Ex. 1165, ¶¶ [0071], [0120], [0122]. This again would have just required routine programming modifications to the system. Thus, Madhavan-Park-Martinez and Madhavan-Park-Kato-Martinez discloses a system "receiving a revenue amount from a provider of the television advertisement as a result of electronically delivering the user profile information."

491. Accordingly, it is my opinion that Madhavan-Park-Martinez and Madhavan-Park-Kato-Martinez teach the additional limitations included in dependent claim 33 and render claim 33 obvious to a POSA.

19. Dependent Claim 35: "The method of claim 26 further comprising, with the computer equipment, electronically delivering the first television advertisement to the computer system for subsequent direction to the set-top box."

492. Claim 35 of the '260 Patent depends from claim 26 and further requires "with the computer equipment, electronically delivering the first television advertisement to the computer system for subsequent direction to the set-top box." Ex. 1101, claim 35. As discussed above, claim 26, from which claim 35 depends is taught by Madhavan-Park-Martinez and Madhavan-Park-Kato-Martinez.

493. Claim 35 requires the computer equipment "electronically delivering the first television advertisement to the computer system for subsequent direction to the set-top box." As I discussed above with regard to Element [26D] and claim 1, in Madhavan profile information is used to select advertisements, which are then

sent to a set-top box. Sections XII.B.1.e, XII.A.1. In Madhavan, the processing servers 104 (part of the claimed "computer system") and advertising servers 105 (part of the claimed "computing equipment") communicate with each other. Ex. 1162, 9:40-57, Fig. 2 (showing two way communication between the processing servers 104 and the advertising servers 105). For example, Madhavan describes sending, from the processing servers 104 and to the advertising servers 105, user identification and/or classification information. *Id*. Madhavan further describes that, using this information, the advertising servers 105 obtain advertisements. Id. For example, Madhavan describes that the advertising servers 105 "access the advertising storage module 108 to retrieve advertisements related to previously stored actions of the user 110 and their respective associated categories." Ex. 1162, 9:43-46.

494. It is my opinion that a POSA would recognize that, as part of this two way communication between the processing servers 104 and to the advertising servers 105, the advertising servers 105 (claimed "computer equipment") could deliver the identified advertisement to the processing servers 104 (claimed "computer system"), thus teaching the claimed "electronically delivering the first television advertisement to the computer system."

495. But while Madhavan does not specify exactly how the advertisement should be directed, Martinez teaches independent profile providers can generate

revenue from advertisers for maintaining user profiles and directing advertisements. Ex. 1165, [0047]-[0048], [0073]-[0074], [0076], [0110], [0123], [0127], Fig. 3. As I discussed regarding Element [26A], Martinez's independent profile providers are akin to the claimed computer system. Section XII.B.1.b.

496. It is my opinion that a POSA would find it obvious and recognize that it would be beneficial to modify Madhavan-Park-Martinez and Madhavan-Park-Martinez-Kato so that the maintainer of the user profiles also directed the advertisement, as taught by Martinez. For example, an advertiser would then have to only pay a single, independent entity for targeted advertising based on user profile information. A POSA would have also found it obvious to combine the prior art computer systems of Madhavan-Park-Martinez and Madhavan-Park-Martinez-Kato with Martinez's method of a user profile provider directing advertisements to provide the predictable result of a computer system that maintains user profiles and directs advertisements. A POSA would also have had a reasonable expectation of success because the modification would have merely required routine software modifications so that the computer system receives a revenue for directing an advertisement.

497. Therefore, it is my opinion that Madhavan-Park-Martinez and Madhavan-Park-Kato-Martinez teaches "with the computer equipment,

electronically delivering the first television advertisement to the computer system for subsequent direction to the set-top box," as required by claim 35.

498. Accordingly, as shown above, Madhavan-Park-Martinez and Madhavan-Park-Kato-Martinez teach the additional limitations included in dependent claim 35, and renders claim 35 obvious to a POSA.

20. Dependent Claim 36: "The method of claim 26 further comprising, with the computer equipment, directing the television advertisement to the set-top box in response to instructions received from the computer system."

499. Claim 36 of the '260 Patent depends from claim 26 and further requires "with the computer equipment, directing the television advertisement to the set-top box in response to instructions received from the computer system." Ex. 1101, claim 36. As discussed above, claim 26 is taught by Madhavan-Park-Martinez and Madhavan-Park-Kato-Martinez.

500. As I discussed for claim 26, the computer equipment (*e.g.*, Madhavan's webservers 102, advertising servers 105, and advertising storage module 108) delivers profile information to the computer system (*e.g.*, processing servers 104 and data storage module 106), which results in delivery of an advertisement based on the user profile information. Section XII.B.1. Madhavan specifically discloses advertising servers 105 (part of the claimed "computer equipment") receiving user profile information from the processing server 104 and retrieving advertisements related to the user profile information to be directed to the STB. Ex. 1162, 9:36-67,

11:44-67, Figs. 6, 10. The user profile information received from the processing servers 104 (the claimed "instructions received from the computer system") includes the various categories and related user activity to inform which targeted advertisements direct, disclosing the claimed instructions received from the computer system. In response to the receipt of such user profile information, the advertising servers 105 (part of the "computer equipment") retrieve, based on the user profile information, advertisements to be directed to media device 140 (which includes the claimed "set-top box". Section XII.B.1; Ex. 1162, 9:36-67, 11:44-67, Figs. 6, 10.

501. Therefore, it is my opinion that Madhavan-Park-Martinez and Madhavan-Park-Kato-Martinez teaches "with the computer equipment, directing the television advertisement to the set-top box in response to instructions received from the computer system," as required by claim 36.

502. Accordingly, as shown above, Madhavan-Park-Martinez and Madhavan-Park-Kato-Martinez teach the additional limitations included in dependent claim 36, and renders claim 36 obvious to a POSA.

21. Dependent Claim 37: "The method of claim 26 wherein the step of delivering user profile information comprises delivering the first user online access IP address."

503. Claim 37 of the '260 Patent depends from claim 26 and further requires "wherein the step of delivering user profile information comprises delivering the

first user online access IP address." Ex. 1101, claim 37. As discussed above, claim 26, from which claim 37 depends is taught by Madhavan-Park-Martinez and Madhavan-Park-Kato-Martinez.

504. As I discussed above for claim 26, Madhavan-Park-Martinez and Madhavan-Park-Kato-Martinez teaches the delivery of user profile information to a computer system, including the first user online IP access address. See Section XII.B.1. Such user profile information includes identification information such as a device identifier (a public IP address of the shared IP router) (the claimed "first user online access IP address"). *Id*. For example, such user profile information is delivered from web servers 104 to the processing servers 104 for client machine 130. Id.

505. Therefore, it is my opinion that Madhavan-Park-Martinez and Madhavan-Park-Kato-Martinez teaches "wherein the step of delivering user profile information comprises delivering the first user online access IP address," as required by claim 37.

506. Accordingly, as shown above, Madhavan-Park-Martinez and Madhavan-Park-Kato-Martinez teach the additional limitations included in dependent claim 37, and renders claim 37 obvious to a POSA.

22. Dependent Claim 40: "The method of claim 39 wherein (i) the step of delivering electronic user profile information derived from the online activity comprises, with the computer equipment, delivering the first user online access IP address; and (ii) the selection of a television advertisement is based on user profile information that is not delivered to the computer system."

507. Claim 40 of the '260 Patent depends from claim 38 and further requires "wherein (i) the step of delivering electronic user profile information derived from the online activity comprises, with the computer equipment, delivering the first user online access IP address; and (ii) the selection of a television advertisement is based on user profile information that is not delivered to the computer system." Ex. 1101, claim 40. As discussed above, claim 38, from which claim 40 depends is taught by Madhavan-Park-Martinez and Madhavan-Park-Kato-Martinez.

508. Regarding Element [40A], as discussed for claims 38 and 39, Madhavan-Park-Martinez and Madhavan-Park-Kato-Martinez teach "**delivered user profile information of a first user of the multitude of users**" and that this user profile information "**includes identification of the first online IP address**." *See* Sections V.B.2, V.B.17; Ex. 1162, 7:33-36, 7:63-67, 8:45-48, 10:6-9, 10:47-50, 10:65-11:6, 11:34-37. More specifically, Madhavan-Park-Martinez and Madhavan-Park-Kato-Martinez describe delivering, using web servers 102 and to the processing servers 104, identification information for the client machine 130. *Id*. For example, this device identification information would include an IP address (the

claimed "**first user online access IP address**"), port number, MAC address, and/or other information. *Id.*

509. Regarding element [40B], Madhavan describes using content classification categories to select targeted advertisements for delivery to user devices. Ex. 1162, 8:57-9:8, 9:36-67, 11:38-61. For example, such content classification categories are generated and sent by the processing servers 104 (the part of the claimed "**computer system**"). *Id*. These content classification categories (part of the claimed "**user profile information**") are not delivered to the processing servers 104. *Id*. Rather they are generated at the processing servers 104 (part of the claimed "**computer system**") and delivered to the advertising servers 105 (part of the claimed "**computer equipment**"). *Id*. The advertising servers 105 then use such content classification categories to select and deliver advertisements. It would thus be evident to a POSA that, although the content classification categories are used to select the advertisement, it is not delivered to the computer system. Rather, it is merely generated at the computer system for subsequent use in selecting an advertisement.

510. Therefore, it is my opinion that Madhavan-Park-Martinez and Madhavan-Park-Kato-Martinez teaches "wherein (i) the step of delivering electronic user profile information derived from the online activity comprises, with the computer equipment, delivering the first user online access IP address; and (ii) the

selection of a television advertisement is based on user profile information that is not delivered to the computer system," as required by claim 40.

511. Accordingly, as shown above, Madhavan-Park-Martinez and Madhavan-Park-Kato-Martinez teach the additional limitations included in dependent claim 40, and renders claim 40 obvious to a POSA.

23. Dependent Claims 106 and 128

512. Except for their dependencies, claims 106 and 128 are identical to claim 44. Ex. 1101, claims 106 and 128. It is my opinion that my analysis for claim 44 is applicable to claims 106 and 128, and would not have been affected by the additional reliance on Martinez in claims 26 or 38. Therefore, it is my opinion that a POSA would have found claims 106 and 128 obvious in view of Madhavan-Park-Martinez and Madhavan-Park-Kato-Martinez for the same reasons as claim 44. *See* Sections XII.A.1, XII.B.1, XII.B.2, XII.A.32above.

24. Dependent Claims 107 and 129

513. Except for their dependencies, claims 107 and 129 are identical to claim 45. Ex. 1101, claims 107 and 129. It is my opinion that my analysis for claim 45 is applicable to claims 107 and 129, and would not have been affected by the additional reliance on Martinez in claims 26 or 38. Therefore, it is my opinion that a POSA would have found claims 107 and 129 obvious in view of Madhavan-Park-Kato-

Martinez for the same reasons as claim 45. *See* Sections XII.B.1-2, XII.A.1, XII.A.34, above.

25. Dependent Claims 108 and 130

514. Except for their dependencies and the presence of the modifier "first" before "user's online user interface device," (claim 108) or the change from "first online access IP address/set-top box IP address" to "online user interface device identifier/set-top box identifier," (claim 130), claims 108 and 130 are identical to claim 46. *See* Ex. 1101, claims 108 and 130. It is my opinion that my analysis for claim 46 is applicable to claims 108 and 130, and would not have been affected by the additional reliance on Martinez in claims 26 or 38. Therefore, it is my opinion that a POSA would have found claims 108 and 130 obvious in view of Madhavan-Park-Kato-Martinez for the same reasons as claim 46. *See* Sections XII.B.1-2, XII.A.36, above.

26. Dependent Claims 109 and 131

515. Except for their dependencies, claims 109 and 131are identical to claim 47. Ex. 1101, claims 109 and 131. Therefore, it is my opinion that a POSA would have found claims 109 and 131 to be obvious in view of Madhavan-Park-Kato-Martinez for the same reasons as claim 47, and would not have been affected by the additional reliance on Martinez in claims 26 or 38. *See* Sections XII.B.1-2, XII.A.38, above.

27. Dependent Claim 110: "The method of claim 107 wherein the first online access IP address and the set-top box IP address are associated based on a correlation between the common IP address and an online user interface device identifier that indicates the user's online user interface device."

516. Except for their dependencies, claims 48 and 110 are identical. See Ex. 1101, claim 110. Therefore, it is my opinion that a POSA would have found claim 110 obvious in view of Madhavan-Park-Kato-Martinez for the same reasons as claim 48, which would not have been affected by the additional reliance on Martinez in claim 26. *See* Sections XII.B.1, XII.A.40, above.

28. Dependent Claims 114 and 134

517. Except for their dependencies, claims 52, 114, and 134 are identical (claim 114) or nearly identical but for inconsequential wording changes (claim 134). See Ex. 1101, claims 114 and 134. Claims 114 and 134 are ultimately dependent on claims 26 and 38, respectively, and, as I have explained, Madhavan-Park-Kato-Martinez teaches those claims and the intervening dependent claims. Sections XII.B.1-2, XII.A.41. And as I explained above for claims 52 and 1, Madhavan-Park-Kato teaches use of MAC addresses as a device identifier for set-top boxes. Sections XII.A.1 and XII.A.41. Therefore, it is my opinion that a POSA would have found claims 114 and 134 obvious in view of Madhavan-Park-Kato-Martinez for substantially the same reasons as claim 52. *See* Section XII.A.41, above.

29. Dependent Claims 116 and 141

518. Except for their dependencies and inconsequential wording changes, claims 116, and 141 are nearly identical to claim 54. See Ex. 1101, claims 116 and 141. Therefore, it is my opinion that a POSA would have found claims 116 and 141 obvious in view of Madhavan-Park-Martinez and Madhavan-Park-Kato-Martinez for the same reasons as claim 54. *See* Section XII.A.43, above. In my opinion, the independent operation of the computer equipment and computer system in the Madhavan-Park-Martinez and Madhavan-Park-Kato-Martinez systems does not change my analysis above.

30. Dependent Claims 117 and 142

519. Except for their dependencies, claims 55, 117, and 142 are either identical (claim 117) or nearly identical but for the change from "first online access IP address/set-top box IP address" to "online user interface device identifier/set-top box identifier" (claim 142). See Ex. 1101, claims 117 and 142. Therefore, it is my opinion that a POSA also would have found claims 117 and 142 obvious in view of Madhavan-Park-Martinez and Madhavan-Park-Kato-Martinez for the same reasons as claim 55. *See* Section XII.A.45, above. In my opinion, the independent operation of the computer equipment and computer system in the Madhavan-Park-Martinez and Madhavan-Park-Kato-Martinez systems does not change my analysis above.

31. Dependent Claims 118 and 143

520. Except for their dependencies and the change from "first online access IP address/set-top box IP address" to "online user interface device identifier/set-top box identifier" (claim 143), claims 118, and 143 are identical (claim 118) or nearly identical to claim 56. See Ex. 1101, claims 118, and 143. Therefore, it is my opinion that a POSA also would have found claims 118, and 143 obvious in view of Madhavan-Park-Martinez and Madhavan-Park-Kato-Martinez for the same reasons as claim 56. See Section XII.A.47, above. In my opinion, the independent operation of the computer equipment and computer system in the Madhavan-Park-Martinez and Madhavan-Park-Kato-Martinez systems does not change my analysis above.

32. Dependent Claims 119 and 144

521. Except for their dependencies and some inconsequential wording changes, 119 and 144 are nearly identical to claim 57. See Ex. 1101, claims 119 and 144.

522. Specifically, claim 119 recites "automatically deriving the user profile information from the online activity from the first online access IP address" as opposed to "automatically deriving the user profile information from the online activity *performed* from the first online access IP address," but a POSA would have understood that online activity "from the first online access IP address" would be and/or include online activity "performed from the first online access IP address."

Claims 119 and 144 further recite performing their limitations "with the computer equipment" rather than "with the computer system," but as I described with respect to claim 26 at Section XII.B.1, Madhavan-Park-Martinez and Madhavan-Park-Kato-Martinez both teach computer equipment (the web servers 102, advertising servers 105, and advertising storage module 108 of Madhavan's advertising entity 100) as well as a computer system (Madhavan's processing servers 104, which are coupled to data storage module 106). Therefore, both Madhavan-Park-Martinez and Madhavan-Park-Kato-Martinez teach "with the computer equipment," (the web servers 102, advertising servers 105, and advertising storage module 108 of Madhavan's advertising entity 100) "automatically deriving the user profile information." For example, web servers 102 automatically receive the identification information and event/action data from the user devices. Ex. 1162, 2:62-3:52, 5:53-6:12, 7:14-55, 8:9-25, 8:43-9:3, 10:3-25, 10:65-11:11, 12:49-62, Figs. 2, 5-7. Thus, it is my opinion that a POSA would have found claims 119 and 144 obvious in view of Madhavan-Park-Martinez and Madhavan-Park-Kato-Martinez for the same reasons as claim 57. *See* Section XII.A.49, above.

33. Dependent Claim 120: "The method of claim 31 wherein the first television advertisement is selected based at least partly on a specific search request, which request has originated from the first online user interface device."

523. Claim 120 of the '260 Patent depends from claim 31 and further requires "wherein the first television advertisement is selected based at least partly

on a specific search request, which request has originated from the first online user interface device." Ex. 1101, claim 120. It is my opinion that Madhavan-Park-Martinez and Madhavan-Park-Kato-Martinez teaches claim 120 for substantially the same reasons as Madhavan-Park and Madhavan-Park-Kato teaching claim 6. *See* XII.A.10; Ex. 1162, 1:38-46, 2:62-3:55, 5:53-6:50, 8:1-9, 8:38-67, 10:65-11:11, 11:18-37. That is, as I explained for claim 6, Madhavan teaches that the online activity may include a search request. That online activity is used to select advertisements, as I explained for claim elements [1B] and [26D]. *See* Sections XII.A.1.c and XII.B.1.e; Ex. 1162, 1:46-54, 9:4-8, 9:36-67; *see also id.*, Abstract, 1:7-11, 3:55-63, 12:1-20, Fig. 11. The independent operation of the computer equipment and computer system in the Madhavan-Park-Martinez and Madhavan-Park-Kato-Martinez systems does not change my opinions relating to these further processes of selecting an advertisement based on online activity, including a search request originating from a user's client machine.

524. Accordingly, it is my opinion that Madhavan-Park-Martinez and Madhavan-Park-Kato-Martinez render claim 120 obvious.

34. Dependent Claim 121: "The method of claim 34 wherein the revenue amount is received from an advertiser that has contracted to display a TV ad to persons who have characteristics contained in the user profile information."

525. Claim 121 of the '260 Patent depends from claim 34 and further requires "wherein the revenue amount is received from an advertiser that has

contracted to display a TV ad to persons who have characteristics contained in the user profile information." Ex. 1101, claim 121. Claim 34 is taught by Madhavan-Park-Martinez and Madhavan-Park-Kato-Martinez. *See* Sections XII.B.1, XII.B.16.

526. As I have previously discussed with respect to claims 24, 34, 42, and 103, Madhavan-Park-Martinez and Madhavan-Park-Kato-Martinez disclose "automatically providing targeted advertisements to users". *See* Sections XII.B.7, XII.B.16. Claim 121 adds the requirement that "the revenue amount is received from an advertiser that has contracted to display a TV ad to persons who have characteristics contained in the user profile information." Ex. 1101, claim 121. Martinez further discloses that its system "may receive a request from one or more third parties to provide user profiles having certain demographic characteristics." Ex. 1165, ¶ [0048]. Martinez discloses that "the third party is a vendor who selects one or more user profiles to which to deliver targeted media." *Id.* Finally, these third-parties "may compensate the maintainer of the user profiles in return for access to the user profiles and/or a right to present the targeted media." *Id.*; *see also id.*, ¶¶ [0047], [0073]-[0074], [0076], [0110], [0122]-[0123], [0127]. For the same reasons I discussed in claims 24 and 26, a POSA would have found it obvious to incorporate this teaching as it would allow revenue generation from advertisers for providing more relevant targeted advertisements to users. Sections XII.B.1, XII.B.7.

527. Accordingly, it is my opinion that Madhavan-Park-Martinez and Madhavan-Park-Kato-Martinez teach the additional limitations included in dependent claim 121 and render claim 121 obvious to a POSA.

35. Dependent Claim 122: "The method of claim 121 further comprising, with the computer equipment, automatically selecting the first television advertisement based on the user profile information."

528. Except for their dependencies, claims 31 and 122 are identical. See Ex. 1101, claim 31. As I explained above, Madhavan-Park-Martinez, and Madhavan-Park-Kato-Martinez render independent claim 26 and intervening claims 34 and 121 obvious. Sections XII.B.1, XII.B.16, XII.B.34. The addition of Martinez to Madhavan as modified by Park does not change the obviousness of the elements recited in claim 31. Therefore, it is my opinion that a POSA would have found claim 122 obvious in view of Madhavan-Park-Martinez, and Madhavan-Park-Kato-Martinez as well for substantially the same reasons as claim 31. *See* Section XII.B.14, above.

36. Dependent Claims 123 and 149

529. Except for their dependencies and some insubstantial wording changes 123 and 149 are identical to claim 59. Ex. 1101, claims 59, 123 and 149. It is my opinion that my analysis for claim 59 is applicable to these claims. Therefore, it is my opinion that claims 123 and 149 would have been obvious to a POSA in view of

Madhavan-Park and Madhavan-Park-Kato for the same reasons as claim 59. *See* Section XII.A.53, above. The independent operation of the computer equipment and computer system in the Madhavan-Park-Martinez and Madhavan-Park-Kato-Martinez systems does not change my analysis above.

37. Dependent Claims 124 and 150

530. Except for their dependencies and the change from "first online access IP address/set-top box IP address" to "online user interface device identifier/set-top box identifier" (claim 150), 124 and 150 are identical (claim 124) or nearly identical to claim 60. It is my opinion that my analysis for claim 60 is applicable to claims 124 and 150. Therefore, it is my opinion that a POSA would have found claims 124 and 150 obvious in view of Madhavan-Park-Martinez and Madhavan-Park-Kato-Martinez for the same reasons as claim 60. *See* Section XII.A.55, above. The independent operation of the computer equipment and computer system in the Madhavan-Park-Martinez and Madhavan-Park-Kato-Martinez systems does not change my analysis above.

38. Dependent Claims 125 and 152

531. Except for their dependencies and the change from "first online access IP address" to "second online access IP address" (claim 125), from "first online access IP address" to "second user interface device identifier" (claim 152) or from "set-top box IP address" to "set-top box identifier" (claim 152), claims 125 and 152

are nearly identical to claim 2. As I described above with respect to claim 61, a POSA would have found "online access IP addresses" obvious for the same reasons as "online user interface device identifiers." See Section XII.A.2, above. As I explained with respect to claim 3, a POSA would have found "second online access IP addresses/second online user interface device identifiers" obvious for the same reasons as "first online access IP addresses/first online user interface device identifiers." See Section XII.A.5, above. Thus, it is my opinion that a POSA would have found claims 125 and 152 obvious in view of Madhavan-Park-Martinez and Madhavan-Park-Kato-Martinez for the same reasons as claim 2, 3, and 61. See Sections XII.A.2-3 and XII.A.5, above. The independent operation of the computer equipment and computer system in the Madhavan-Park-Martinez and Madhavan-Park-Kato-Martinez systems does not change my analysis above.

39. Dependent Claim 126: "The method of claim 39 wherein the user profile information derived from the online activity comprises an indication of a search request originating from the online user interface device of the first user."

532. Claim 126 of the '260 Patent depends from claim 39 and further requires "wherein the user profile information derived from the online activity comprises an indication of a search request originating from the online user interface device of the first user." Ex. 1101, claim 126. As discussed above, claim 39 is taught by Madhavan-Park-Martinez and Madhavan-Park-Kato-Martinez. *See* Section XII.A.17.

533. Automatically deriving user profile information from the user's online activity is taught by Madhavan-Park and Madhavan-Park-Kato as I discussed above for Element [1B]. Ex. 1162, 1:38-46, 2:62-3:55, 5:36-6:50, 8:38-67, 10:65-11:11, 11:18-37, Figs. 3, 6, 9, 10; Section XII.A.1.c. For example, Madhavan discloses deriving user profile information from the user's online activity when a user accesses the Internet over the network. Ex. 1162, 2:62-67, 3:9-15, 3:39-55. Madhavan specifically describes that the user may initiate types of actions such as search queries or search clicks **("an indication of a search request originating from the online user interface device of the first user")**, and using the data storage module to store this data as part of the user profile. Ex. 1162, 3:9-15, 3:39-55, 8:37-67.

534. Therefore, as shown above, Madhavan-Park-Martinez and Madhavan-Park-Kato-Martinez teaches the additional limitations included in dependent claim 126, and renders claim 126 obvious to a POSA.

40. Dependent Claim 137: "The method of claim 38 wherein the online user interface device identifier includes the first online access IP address."

535. Aside from their dependencies, claims 71 and 137 are identical. Ex. 1101, claims 71, 137. As I explained above at Section XII.A.57, Madhavan-Park-Martinez and Madhavan-Park-Kato-Martinez teach claim 38. The addition of Martinez does not alter the obviousness of the Madhavan-Park or Madhavan-Park-Kato combination I explain above with respect to claim 71. Therefore, it is my

opinion that claim 137 would have been obvious to a POSA in view of Madhavan-Park-Martinez and Madhavan-Park-Kato-Martinez for the same reasons as claim 71. See Section XII.A.57, above.

41. Dependent Claim 138: "The method of claim 38 wherein the set-top box identifier includes the common IP address."

536. Except for their dependencies, claims 72 and 138 are identical. See Ex. 1101, claims 72, 138. As I explained above at Section XII.B.2, Madhavan-Park-Martinez and Madhavan-Park-Kato-Martinez teach claim 38. The addition of Martinez does not alter the obviousness of the Madhavan-Park or Madhavan-Park-Kato combination I explain above with respect to claim 72. Therefore, it is my opinion that claim 138 would have been obvious to a POSA in view of Madhavan-Park-Martinez and Madhavan-Park-Kato-Martinez for the same reasons as claim 72. See Section XII.A.58, above.

42. Dependent Claim 139: "The method of claim 38 wherein the set-top box identifier includes at least a portion of the common IP address."

537. Except for their dependencies, claims 73 and 139 are identical. See Ex. 1101, claims 73, 139. As I discussed above at Section XII.B.2, Madhavan-Park-Martinez and Madhavan-Park-Kato-Martinez teach claim 38. The addition of Martinez does not alter my opinion of the obviousness of the elements of claim 73. Therefore, it is my opinion that claim 139 would have been obvious to a POSA in

view of Madhavan-Park-Martinez and Madhavan-Park-Kato-Martinez for the same reasons as claim 73. *See* Section XII.A.59, above. That is, a POSA would have understood that including the common IP address teaches including "at least a portion of the common IP address," as required in claim 73.

43. Dependent Claim 140: "The method of claim 38 wherein the set-top box identifier includes a set-top box IP address."

538. Except for their dependencies, claims 74 and 140 are identical. See Ex. 1101, claims 4, 140. As I discussed above at Section XII.B.2, Madhavan-Park-Martinez and Madhavan-Park-Kato-Martinez teach claim 38. The addition of Martinez does not alter my opinion of the obviousness of the elements of claim 74. Therefore, it is my opinion that claim 140 would have been obvious to a POSA in view of Madhavan-Park-Martinez and Madhavan-Park-Kato-Martinez for the same reasons as claim 74. *See* Section XII.A.60, above.

44. Dependent Claim 146: "The method of claim 42 wherein the revenue amount is received from an advertiser that has contracted to display a TV ad to an audience of an Internet site."

539. Claim 146 of the '260 Patent depends from claim 42 and further requires "wherein the revenue amount is received from an advertiser that has contracted to display a TV ad to an audience of an Internet site." Ex. 1101, claim 146. Claim 42 is taught by Madhavan-Park-Martinez and Madhavan-Park-Kato-Martinez. *See* Section XII.B.16.

540. As I have previously discussed with respect to claims 24, 34, 42, and 103, Madhavan-Park-Martinez and Madhavan-Park-Kato-Martinez disclose "automatically providing targeted advertisements to users." *See* Section XII.B.7, XII.B.16. Martinez further discloses that its system "may receive a request from one or more third parties to provide user profiles having certain demographic characteristics." Ex. 1165, ¶ [0048]. Martinez teaches that "the third party is a vendor who selects one or more user profiles to which to deliver targeted media." *Id.* These third-parties bid or compensate the system "for the right to present media to the users associated with selected user profiles." *Id.,* ¶¶ [0047]-[0048], [0073]-[0074], [0076]; *see also* ¶¶ [0110], [0123], [0127]. Further, Martinez discloses that one aspect of a user's profile information is whether a user has visited an Internet site ("**audience of an Internet site**"). Ex. 1165, ¶ [0069]. This is also consistent with Madhavan, which also records which webpages a user visits. Ex. 1162, 3:1-15, 3:25-34, 6:13-19, 7:45-55, 8:26-33. For the same reasons I discussed in claims 24 and 26, a POSA would have found it obvious to incorporate this teaching as it would allow revenue generation from advertisers for providing more relevant targeted advertisements to users. Sections XII.B.1, XII.B.7.

541. Accordingly, it is my opinion that Madhavan-Park-Martinez and Madhavan-Park-Kato-Martinez teach the additional limitations included in dependent claim 146 and render claim 146 obvious to a POSA.

C. GROUNDS E-F: MADHAVAN IN VIEW OF PARK AND FLICKINGER923 AND/OR MADHAVAN IN VIEW OF PARK, KATO, AND FLICKINGER923

1. Dependent Claim 19: "The method of claim 1 wherein part (b) comprises, with the computer system, directing instructions to the set-top box to retrieve the first television advertisement from a profile provider, from an online site, or from an independent ad server."

542. Claim 19 of the '260 Patent depends from claim 1 and further requires "wherein part (b) comprises, with the computer system, directing instructions to the set-top box to retrieve the first television advertisement from a profile provider, from an online site, or from an independent ad server." Ex. 1101, claim 19. As discussed above, claim 1 is taught by Madhavan-Park and Madhavan-Park-Kato.

543. As I discuss above for claim [1B], Madhavan-Park and Madhavan-Park-Kato teach that when the user accesses Madhavan's content server 100 using a media device 140 that includes a STB, one or more servers of the content server 100 may cause deliver targeted television advertisements to media device 140 based on identification information and user event/action data associated with the client machine 130 that was previously stored to database 200 by the content server 100. Ex. 1162, 7:14-22, 8:34-41, 9:4-8, 9:36-67, Fig. 6. See Section XII.A.1.c. To the extent that Madhavan-Park and Madhavan-Park-Kato fails to expressly teach directing instructions to the set-top box to retrieve an advertisement, Flickinger923 does.

544. Like Madhavan, Flickinger923 is directed to a targeted advertisement system. Flickinger923, Abstract. In particular, Flickinger923 teaches that the advertiser "inserts a code (**"instructions"**)" into a program that identifies an advertisement, which is then sent to a STB. Ex. 1166, 11:21-34. This is then received by the STB, which decodes, processes, and uses the code "to determine which IPG ad" is to be "requested from an upstream server [**"independent ad server"**] for display." Ex. 1166, 11:21-34.

545. It would have been obvious to modify Madhavan's system to use Flickinger923's advertisement delivery techniques because this was simply one well-known way of delivering advertisement content. Madhavan already discloses providing targeted television advertisements, and thus, it would have been obvious to a POSA to have chosen and applied one of the known methods advertisement delivery, as Flickinger923 teaches. Ex. 1162, 3:35-39, 4:46-55, 5:3-28.

546. This combination would have also been obvious to a POSA because it represents a simple substitution of one known advertisement delivery process (an STB retrieving an advertisement using Flickinger923's ad-code insertion) for another (content server 100 sending the advertisement to the STB). That is, a POSA would have recognized that there were essentially two identified, predictable options for a set-top box to obtain an advertisement. One option was for the set-top box to receive it automatically without requesting it. The other option was for the set-top

box to send a request or otherwise retrieve the advertisement, and Flickinger923 explicitly discloses a technique for doing so.

547. Further, the use of embedded code would also have been provided benefits, including beneficially reducing or minimizing the need for the servers of content server 100 or a set-top box to serve as a repository for advertisements. Instead, the content server 100's servers and set-top box may simply request or retrieve the advertisements from its source (e.g., an online site or advertisement server) as needed. Additionally, use of a retrieval process, as taught by Flickinger923, would further allow the recipient device to control advertisement timing. For example, the recipient device would be able to retrieve the advertisement only when needed (e.g., when timing in a television program is suitable for insertion of an advertisement).

548. Accordingly, as shown above, Madhavan-Park-Flickinger923 and Madhavan-Park-Kato-Flickinger923 teach the additional limitations included in dependent claim 19, and renders claim 19 obvious to a POSA.

2. Dependent Claim 20: "The method of claim 1 wherein the computer system causes the first television advertisement to be directed only in response to a request for advertisements originating from the user's set-top box."

549. Claim 20 of the '260 Patent depends from claim 1, which is taught by Madhavan-Park and Madhavan-Park-Kato as explained in Section XII.A.1. Claim 20 further requires "wherein the computer system causes the first television

advertisement to be directed only in response to a request for advertisements originating from the user's set-top box." Ex. 1101, claim 20. It is my opinion that claim 20's requirement that the advertisement is directed only in response to a request from the user's set-top box is taught by Madhavan-Park-Flickinger923 and Madhavan-Park-Kato-Flickinger923 for the same reasons as I explained for claim 19. That is, Madhavan-Park-Flickinger923 and Madhavan-Park-Kato-Flickinger923 teach an advertising system that sends a code to the set-top box that, when processed by the set-top box, causes the set-top box to request and receive a particular advertisement, e.g., based on embedded code in a program. Section XII.C.1;Ex. 1166, 2:2-7, 3:44-49, 4:67-5:6, 11:21-34. Accordingly, in the underlying combinations, an advertisement is directed to the set-top box only in response to a request from the set-top box. A POSA would have understood that the advertisement corresponding to the embedded code is not provided to the set-top box until the set-top box browser client decodes, processes, and uses the code fragment. Accordingly, embedding such a code in requested content by Madhavan-Park-Flickinger923 and Madhavan-Park-Kato-Flickinger923 teaches "the computer system causes the first television advertisement to be directed only in response to a request for advertisements originating from the user's set-top box."

550. As I discuss above, it would have been obvious to incorporate the teachings of Flickinger923 into Madhavan-Park and Madhavan-Park-Kato because

this would beneficially allow the STB to control the timing for receiving advertisements, which would have reduced the amount of time that advertisements would need to be stored on the STB. Ex. 1166, 11:22-39. The proposed combination is merely a simple substitution of one known method (advertisement delivery process where a content service provider sending the advertisement to the STB only in response to a request) for another (advertisement delivery process where content service provider sending the advertisement to the STB without a request). Modifying the system to use the STB-executed embedded code would have led to a predictable result wherein advertisement is sent to the STB only in response to a request. *Id.* This modification to Madhavan-Park and Madhavan-Park-Kato would also have been obvious to try given that there were only two identified, predictable options to send an advertisement to a STB: with or without a request. *Id.*

551. Accordingly, Madhavan-Park-Flickinger923 and Madhavan-Park-Kato-Flickinger923 teach the additional limitations included in dependent claim 20, and renders claim 20 obvious to a POSA.

3. Dependent Claims 98 and 99

552. Claim 98 of the ’260 Patent depends from claim 61 and further requires “wherein part (b) comprises, with the computer system, directing instructions to the set-top box to retrieve the first television advertisement from a profile provider, from an online site, or from an independent ad server.” Ex. 1101, claim 98. As discussed

above, claim 61, from which claim 98 depends, is taught by Madhavan-Park and Madhavan-Park-Kato. *See* Section XII.A.2.

553. Claim 99 of the ’260 Patent depends from claim 61 and further requires “wherein the computer system causes the first television advertisement to be directed only in response to a request for advertisements originating from the user's set-top box.” Ex. 1101, claim 99. As discussed above, claim 61, from which claim 99 depends, is taught by Madhavan-Park and Madhavan-Park-Kato. *See* Section XII.A.2.

554. I note that, other than their dependencies, claims 98 and 99 are identical to claims 19 and 20, respectively. Therefore, it is my opinion that a POSA would have found claims 98 and 99 obvious in view of Madhavan-Park-Flickinger923 and Madhavan-Park-Kato-Flickinger923 for the same reasons as claims 19 and 20, respectively. *See* Sections XII.C.1-2, above.

D. GROUNDS G-H: MADHAVAN IN VIEW OF PARK AND BLACK AND/OR MADHAVAN IN VIEW OF PARK, KATO, AND BLACK

1. Dependent Claim 10: “The method of claim 1 wherein the first television advertisement is selected from among a plurality of possible television advertisements based at least in part on the television content viewed at the time the first television advertisement is to be presented by the set-top box.”

555. Claim 10 of the ’260 Patent depends from claim 1 and further requires “wherein the first television advertisement is selected from among a plurality of

possible television advertisements based at least in part on the television content viewed at the time the first television advertisement is to be presented by the set-top box." Ex. 1101, claim 10. As discussed above, claim 1 is taught by Madhavan-Park and Madhavan-Park-Kato.

556. I have been asked to consider a scenario where Madhavan does not explicitly teach an advertisement being selected based on television content being viewed when the advertisement is to be presented by a set-top box. I note that, as I explained for claim 8, Madhavan teaches selecting an advertisement from multiple advertisements stored in an advertisement storage module. Section XII.A.14, above; Ex. 1162, Abstract, 1:7-11, 1:46-54, 3:55-63, 4:27-36, 7:36-59, 9:4-8, 9:36-67, 11:27-67, Figs. 6, 10. Madhavan also discloses that advertisements may be selected and presented during television programming. Ex. 1162, 7:45-67. To the extent that Madhavan-Park and Madhavan-Park-Kato do not teach that the advertisement selection is "based at least in part on the television content viewed at the time the first television advertisement is to be presented by the set-top box," as recited in claim 10, Black does.

557. Black teaches an advertisement selection system, similar to the systems of Madhavan-Park and Madhavan-Park-Kato, that targets advertisements based on user profiles. More specifically, Black describes identifying advertisements to display during video programming (e.g., based on content categories of the video,

"an interval of time matching the time at which a viewer requests the video," or the like) (claimed "**television content viewed at the time the first television advertisement is to be presented by the set-top box**"). Ex. 1134, ¶¶ [0008], [0012]. For example, Black explains that an "Ad selector 36 applies the rules to identify the advertising campaigns and which ads in those advertising campaigns are to be presented to viewer 16 during the viewing of a requested video by the viewer." Ex. 1134, ¶ [0026]. Indeed, presentation of the advertisements may be restricted to "the time at which the requested video runs on the viewer's television." Ex. 1134, ¶¶ [0025]-[0026], [0030]. Accordingly, Black teaches advertisement selection taking into account the claimed "the television advertisement is selected … based at least in part on the television content viewed at the time the first television advertisement is to be presented []."

558. It would have been obvious to a POSA to modify Madhavan-Park's and Madhavan-Park-Kato's targeted advertisement systems to similarly select advertisements based on what a user is currently watching on television, as taught in Black because it provides yet another piece of profile information to better cater advertising to a particular user, thus improving the accuracy and relevance of Madhavan-Park's and Madhavan-Park-Kato's targeted advertising. In this combination, Madhavan-Park's and Madhavan-Park-Kato's system would track the type of television content being currently viewed through the viewer's media device

140, and add that information to the user's profile information. Madhavan-Park's and Madhavan-Park-Kato's system would subsequently select advertisements based on that profile information, and deliver the targeted advertisements to the user during the television programming, as taught by Black. A POSA would have found it obvious to apply Black's advertisement selection technique (e.g., selecting advertisements based on content being viewed at the time an advertisement is to be presented) to Madhavan-Park's and Madhavan-Park-Kato's systems, as this would provide yet another piece of profile information to better cater advertising to a particular user, thus improving the accuracy and relevance of Madhavan-Park's and Madhavan-Park-Kato's targeted advertising. Ex. 1134, ¶¶ [0009], [0015]-[0016], [0025]-[0026], [0030]. A POSA would recognize that advertising accuracy and relevance may be enhanced because using current viewing behavior (e.g., a type of currently viewed television content) would increase the comprehensiveness and recency of the information in the user's profile. Consequently, the advertisements would be selected based on more current and comprehensive data about the viewer. Further, applying Black's teaching would ensure that the presented advertisements were consistent with that television content, avoiding inconsistent or inappropriate advertisements (*e.g.*, showing advertisements for horror movies or medication for erectile dysfunction during children's programing).

559. Applying Black's technique of determining and using television content being viewed at the time an advertisement is to be presented for advertisement selection would have been obvious to a POSA because it was the use of a known technique to improve similar systems in the same way. As discussed above, Black teaches the known technique of determining and using characteristics of a currently viewed television program (e.g., on-demand video) to select advertisements to be displayed concurrently with that program. Ex. 1134, ¶ [0026] (displaying targeted advertisements "at a "time at which the requested video is to run on the television for the viewer"); *see also* Ex. 1134, ¶¶ [0008], [0012], [0025]. Madhavan-Park's and Madhavan-Park-Kato's systems and Black are also similar in that both systems are configured for selecting and delivering targeted advertisements based on user profile information. *Id*. There are further similarities in that both systems allow for presenting targeted advertisements during the display of television content. Ex. 1162, 7:50-67; Ex. 1134, ¶¶ [0008], [0012], [0025]-[0026], [0030]. And as discussed above, several improvements would have resulted from the application of Black's technique, including the enhancement of user profile information, and better advertisement selection by using more up-to-date user profile information.

560. A POSA would also appreciate that providing advertisements relevant to currently viewed television content may improve the advertisement's viewer

response rate. For example, providing an advertisement for fishing equipment may achieve better response rate when the viewer is watching a fishing show, as compared to when the viewer is watching a sci-fi movie. Accordingly, modifying Madhavan-Park's and Madhavan-Park-Kato's systems to use information or characteristics of television content being viewed at the time an advertisement is to be presented for selecting targeted advertisements would have improved Madhavan-Park's and Madhavan-Park-Kato's systems in a variety of ways, including enabling the selection of targeted advertisements for a VOD audience and increasing advertisement relevance (similar improvements) (e.g., by selecting an advertisement that is relevant to an accompanying context). Ex. 1134, ¶¶ [0009], [0015]-[0016], [0025]. This modification would have been very straightforward, and a POSA would have had a reasonable expectation of success because this combination would have required basic programming modifications to Madhavan-Park's and Madhavan-Park-Kato's systems to include the additional criteria, which was well within the ordinary level of skill in the art.

561. Accordingly, it is my opinion that the combinations of Madhavan-Park-Black and Madhavan-Park-Kato-Black teach the claimed "wherein the first television advertisement is selected from among a plurality of possible television advertisements based at least in part on the television content viewed at the time the first television advertisement is to be presented by the set-top box" of claim 10.

2. Dependent Claim 89: "The method of claim 61 wherein the first television advertisement is selected from among a plurality of possible television advertisements based at least in part on the television content viewed at the time the first television advertisement is to be presented by the set-top box."

562. Except for their dependencies, claims 10 and 89 are identical. Ex. 1101, claims 10, 89. Therefore, it is my opinion that claim 89 would have been obvious to a POSA in view of Madhavan-Park-Black and Madhavan-Park-Kato-Black for the same reasons as claim 10. See Section XII.D.1, above.

E. GROUND I: MADHAVAN IN VIEW OF PARK, KATO, AND GERKEN

1. Dependent Claim 11: "The method of claim 1 wherein the common IP address is an IP address dynamically assigned to a modem or router used by the user for online access and connected to the user's set-top box."

563. Claim 11 of the '260 Patent depends from claim 1 and further requires "wherein the common IP address is an IP address dynamically assigned to a modem or router used by the user for online access and connected to the user's set-top box." Ex. 1101, claim 11. As discussed above, claim 1 is taught by Madhavan-Park and Madhavan-Park-Kato.

564. As I discussed above at Element [1A], and Madhavan-Park-Kato teaches using a common IP address (e.g., a public IP address of a shared IP router) to electronically associate an online access IP address (the IP address of a client machine 130) and an STB IP address (the IP address of a media device 140). Ex. 1162, 3:1-8, 5:43-6:12, 7:33-53, 8:9-67, 9:18-40, 10:3-25, Figs. 5-7; Section

XII.A.1.b. For example, Madhavan-Park-Kato teaches user profiles that associate data obtained from each of a user's various devices. *Id*. Claim 11 further requires that "*the common IP address is an IP address dynamically assigned to a modem or router used by the user for online access and connected to the user's set-top box*," which a POSA would recognize is taught by the combined system of Madhavan-Park-Kato-Gerken. Specifically, it is my opinion that dynamic IP addresses, such as those taught by Gerken, were ubiquitously known.

565. For example, in Gerken, user IP addresses are used to provide targeted online advertising. Ex. 1167, 5:44-57; *see also id*., Abstract, 4:46-62. More specifically, in Gerken, a user's IP address is used to "provide a basis for ad targeting by the online ad network," and continually updating the IP address to reflect changes. *Id*. For example, in Gerken "when a user's IP address is dynamically changed during an online session," the IP address is updated. *Id*. It is my opinion that IP addresses "**dynamically assigned to a modem or router used by the user for online access**," as claimed, are taught by the IP addresses in Gerken, which are dynamically changing during a user's online session. For example, Gerken describes that "a user's IP address id dynamically changed during an online session." Ex. 1167, 5:56-57.

566. It is my opinion that using a dynamically assigned IP address as the common IP address would have been obvious to a POSA. For example, this

common IP address would be used to provide targeted advertisements in Madhavan-Park-Kato's advertising system with an IP sharing router (*e.g.*, by associating online access IP address and STB IP address). Ex. 1167, 5:44-57; *see also id*., Abstract, 4:31-62, 6:55-7:7. Specifically, Gerken describes that "IP address/zip code pairs provide a basis for ad targeting," and that such pairs are "continually updated to reflect changes in the underlying data, such as can occur when a user logs on to or off of their Internet service or when a user's IP address is dynamically changed during an online session." Ex. 1167, 5:50-57. A POSA would have known there are a finite number of available IP addresses, and would have been motivated to limit the number of IP addresses used by devices (e.g., an improvement) in Madhavan-Park and Madhavan-Park-Kato's system (a known device) by applying Gerken's technique of associating IP addresses (e.g., a known technique). Ex. 1167, 5:44-57; *see also id*., Abstract, 4:31-45, 4:46-62, 6:55-7:7. For example, a POSA would have been motivated to do so based on a limited number of available IP addresses. A POSA would also recognize that using dynamic IP addressing may offer more privacy and security benefits to the Madhavan-Park and Madhavan-Park-Kato system. The dynamically-changing IP address would not interfere with Madhavan-Park-Kato's ability to associate devices using changed IP addresses based on, e.g., their MAC address, and the system would readily continue to update the user profiles to keep track of the newly-assigned IP addresses.

567. Further, it is my opinion that a POSA would recognize that it would be obvious to combine a known method, such as Madhavan-Park-Kato's method of associating online access IP addresses and STB IP addresses based on a common IP address, with Madhavan-Park-Kato's online access IP address/STB IP address and Gerken's dynamic IP addresses (e.g., known prior art elements). Ex. 1167, 5:44-57; *see also id*., Abstract, 4:31-45, 4:46-62, 6:55-7:7. A POSA would further recognize that such a combination would result in use of Gerken's dynamic IP address to associate Madhavan-Park-Kato's online access IP address and STB IP address (predictable results). *Id*.

568. Furthermore, it is my opinion that this combination would only have required basic network design knowledge and simple hardware and programming modifications, which was well within the ordinary level of skill in the art, and thus a POSA would have had a reasonable expectation of success in making the combination, especially since dynamically changing IP addresses were ubiquitous at the time.

569. Therefore, it is my opinion that Madhavan-Park-Kato-Gerken teaches "wherein the common IP address is an IP address dynamically assigned to a modem or router used by the user for online access and connected to the user's set-top box," as required by claim 11.

570. Accordingly, as shown above, and Madhavan-Park-Kato-Gerken teach the additional limitations included in dependent claim 11, and renders claim 11 obvious to a POSA.

2. Dependent Claim 90: "The method of claim 61 wherein the common IP address is an IP address dynamically assigned to a modem or router used by the user for online access and connected to the user's set-top box."

571. Claim 90 of the '260 Patent depends from claim 61 and further requires "wherein the common IP address is an IP address dynamically assigned to a modem or router used by the user for online access and connected to the user's set-top box." Ex. 1101, claim 90. As discussed above, claim 61, from which claim 90 depends is taught by Madhavan-Park and Madhavan-Park-Kato. Section XII.A.2. Except for its dependency on claim 61, claim 90 is identical to claim 11.

572. Therefore, it is my opinion that Madhavan-Park-Kato-Gerken teaches "wherein the common IP address is an IP address dynamically assigned to a modem or router used by the user for online access and connected to the user's set-top box," as required by claim 90 for the same reasons as I described above for claim 11. Section XII.E.1.

573. Accordingly, as shown above, Madhavan-Park-Kato-Gerken teach the additional limitations included in dependent claim 90, and renders claim 90 obvious to a POSA.

F. GROUNDS J-K: MADHAVAN IN VIEW OF PARK, MARTINEZ, AND KONINGSTEIN AND/OR MADHAVAN IN VIEW OF PARK, KATO, MARTINEZ, AND KONINGSTEIN

1. Dependent Claim 30: "The method of claim 26 further comprising receiving a revenue amount as a result of the electronic delivering act, wherein the revenue amount is received in response to each instance in which revenue is generated as a result of presenting the selected television advertisement via the set-top box indicated by the set-top box IP address associated with the first online access IP address."

574. Claim 30 of the '260 Patent depends from claim 26 and further requires "receiving a revenue amount as a result of the electronic delivering act, wherein the revenue amount is received in response to each instance in which revenue is generated as a result of presenting the selected television advertisement via the set-top box indicated by the set-top box IP address associated with the first online access IP address." Ex. 1101, claim 30. As I discussed above, claim 26 is taught by Madhavan-Park-Martinez and Madhavan-Park-Kato-Martinez. See Section XII.B.1. As I also discuss above for claim 29, Madhavan-Park-Martinez and Madhavan-Park-Kato-Martinez teach the computer equipment "receiving a revenue amount from a proprietor of the computer system as a result of the electronic delivering act." See Section XII.B.13. But while Madhavan-Park-Martinez and Madhavan-Park -Kato-Martinez do not explicitly teach this "revenue amount [being] received in response to each instance in which revenue is generated as a result of presenting the selected television advertisement," Koningstein does.

575. As I have previously explained at Section XII.B.1 above, with respect to claim 26, a POSA would have understood that Madhavan's web servers 102, advertising servers 105, and advertising storage module 108 collectively correspond to "computer equipment." Further, a POSA would have found it obvious that in the Madhavan-Park-Martinez and Madhavan-Park-Kato-Martinez combinations, the computer equipment automatically electronically delivers electronic user profile information to Madhavan's processing servers 104 and data storage module 106 (claimed "computer system"). *See* Section XII.B.1, above; Ex. 1162, Abstract, 1:7-11, 1:36-43, 2:62-67, 4:26-65, 5:3-27, 7:14-36, 7:60-67, 8:5-8, 8:43-56, 10:35-40, 10:65-11:11, 11:62-67, 12:21-29, 12:41-53, Figs. 1-3, 12.

576. Claim 30 also requires that the computer equipment receive "a revenue amount as a result of the electronic delivering act, wherein the revenue amount is received in response to each instance in which revenue is generated as a result of presenting the selected television advertisement via the set-top box indicated by the set-top box IP address associated with the first online access IP address." Ex. 1101, Claim 30. As I previously explained above at Section XII.B.8 with respect to claim 25, Martinez teaches a computer system that pays a profile provider a fee (claimed "revenue amount") as a result of providing user profile information ("electronic delivering act"). Ex. 1165, ¶¶ [0010], [0109], [0115], [0120], [0121]. Martinez also describes scenarios where the fee may come from advertisers (e.g., of advertising

agencies) who acquire the user profile information, rather than from proprietors of the computer system. Ex. 1165, ¶ [0115].

577. I have been asked to consider a scenario where the above disclosures do not explicitly show that "the revenue amount is received in response to each instance in which revenue is generated as a result of presenting the selected television advertisement via the set-top box indicated by the set-top box IP address associated with the first online access IP address," as recited in claim 30. It is my opinion that in such a scenario, a POSA would have combined Koningstein with Madhavan-Park-Martinez and Madhavan-Park-Kato-Martinez to teach the limitations of claim 30.

578. Koningstein describes a method of delivering targeted advertisements similar to Madhavan and Martinez. Ex. 1124, Abstract, ¶¶ [0022]-[0023], [0039]-[0048]. In Koningstein's method, advertisers only provide a payment for delivery of advertisements when a user takes some kind of revenue-generating action in response to the advertisements. Ex. 1124, ¶¶ [0022]-[0023], [0039]-[0048]. Specifically, Koningstein describes a method in which advertisers are only obligated to pay for delivery of the ads when "some [] monetization event occurs," (i.e., a revenue-generating action such as, for example, purchase of an item by a user).[5] Ex.

[5] As discussed above at Section XII.B.1, Madhavan-Park-Martinez and Madhavan-Park-Kato-Martinez deliver targeted advertisements to a media device 140, such as a set-top box, for display. A POSA would have known that revenue-generating

1124, ¶¶ [0045], [0048]. Therefore, it would have been obvious to a POSA that Koningstein shows a system in which advertisers are obligated to provide a payment ("revenue amount") for presenting select television advertisements, but only when revenue is also generated as a result of presenting the selected advertisements ("the revenue amount is received in response to each instance in which revenue is generated as a result of presenting the selected television advertisement"). Ex. 1124, ¶¶ [0022]-[0023], [0043]-[0048].

579. It is my opinion that a POSA would have had the skills, knowledge, and motivation to modify Madhavan-Park-Martinez's or Madhavan-Park-Kato-Martinez's systems to include Koningstein's method of payment, in which advertisers are only obligated to pay in instances where revenue is generated (i.e., a "monetization event" occurs) in response to presentation of advertisements. This combination would have been obvious because it incentivizes advertisers to purchase profile information to more effectively reach targeted users. A POSA would have also found it obvious to make the modification because it would have been nothing more than combining prior art elements according to known methods

---

events such as user purchases in response to advertisements could be performed through a variety of devices, including a set-top box. For example, it was well known that set-top boxes can allow users to make purchases (e.g., based on displayed advertisements) through the set-top box (e.g., via a user interface). Ex. 1142, 1:34-39, 3:52-5:5; Ex. 1143, 6:37-39, 6:50-57, 7:10-15, 9:2-10, 13:10-25; Ex. 1144, Abstract, ¶¶ [0018], [0125].

to yield predictable results. The prior art elements would have been Madhavan-Park-Martinez's and Madhavan-Park-Kato-Martinez's systems and Koningstein's method of payment where payment to a profile provider is conditioned on a revenue-generated event in response to delivery of the targeted advertisement. This combination would have the predictable result of a targeted advertisement system where advertisers only pay for instances when presentation of their advertisement results in revenue. A POSA would have had a reasonable expectation of success because it would have merely required minimal software modifications so that the computer equipment receives revenue from an advertiser when presentation of their advertisement to a targeted user results in a revenue-generated event.

580. Accordingly, it is my opinion that Madhavan-Park-Martinez and Madhavan-Park-Kato-Martinez as modified by Koningstein teach the additional limitations included in dependent claim 30 and render claim 30 obvious to a POSA.

2. Dependent Claim 43: "The method of claim 42 wherein the revenue amount is received in response to each instance in which revenue is generated as a result of displaying the selected television advertisement via the set-top box indicated by the set-top box identifier associated with the online user interface device identifier of the first user's online user interface device."

581. Claim 43 of the '260 Patent depends from claim 42 and further requires "wherein the revenue amount is received in response to each instance in which revenue is generated as a result of displaying the selected television advertisement via the set-top box indicated by the set-top box identifier associated with the online

user interface device identifier of the first user's online user interface device." Ex. 1101, claim 43. As discussed above, claim 42 is taught by Madhavan-Park-Martinez and Madhavan-Park-Kato-Martinez. *See* Section XII.B.16.

582. Claim 43 further requires that "the revenue amount is received in response to each instance in which revenue is generated as a result of displaying the selected television advertisement via the set-top box indicated by the set-top box identifier associated with the online user interface device identifier of the first user's online user interface device," which is substantially similar to claim 30's requirement that the computer equipment receive "a revenue amount as a result of the electronic delivering act, wherein the revenue amount is received in response to each instance in which revenue is generated as a result of presenting the selected television advertisement via the set-top box indicated by the set-top box IP address associated with the first online access IP address." Ex. 1101, claims 30, 43. A POSA would have recognized that both claims recite receiving revenue in response to each instance in which revenue is generated as a result of presenting or displaying the selected television advertisement. Therefore, it is my opinion that a POSA would have understood that Madhavan-Park-Martinez-Koningstein and Madhavan-Park-Kato-Martinez-Koningstein teaches the additional limitations included in dependent claim 43 for the same reasons as dependent claim 30. *See* Section XII.F.1.

G. GROUNDS L-M: MADHAVAN IN VIEW OF PARK, MARTINEZ, AND MINOR AND/OR MADHAVAN IN VIEW OF PARK, KATO, MARTINEZ, AND MINOR

1. Dependent Claim 105: "The method of claim 26 wherein automatically electronically delivering comprises, with the computer equipment, redirecting the user's online user interface device to a server of the computer system."

583. Claim 105 of the '260 Patent depends from claim 26 and further requires "wherein automatically electronically delivering comprises, with the computer equipment, redirecting the user's online user interface device to a server of the computer system." Ex. 1101, claim 105. As discussed above, claim 26 is taught by Madhavan-Park-Martinez and Madhavan-Park- Kato-Martinez. *See* Section XII.B.1.

584. As I discussed above with regard to claims 26 and 38, in Madhavan-Park-Martinez and Madhavan-Park-Kato-Martinez, user profile information is delivered by Madhavan-Park-Martinez and Madhavan-Park-Kato-Martinez's computer equipment (*e.g.,* web servers 102) to its computer system (e.g., Madhavan's processing servers 104). *See* Sections XII.B.1 and XII.B.2. Automatically delivering user information to a computer system is similarly taught by Minor, which describes automatically delivering user information to remote web site 34A. Ex. 1169, 1:8-25, 3:45-52, 3:62-4:3, 4:19-33, Fig. 2. For example, in Minor, when the operator of an end-computer uses a browser (for example, to view a webpage and/or other displayed document), the webpage

includes a "hyperlink hot spot." *Id.*, 1:20-25; *see also id.*, 3:62-4:3, 4:19-33. In these examples, when the hyperlink hot spot is activated, a call is made to a second web computer. *Id*. For example, when the operator activates a hyperlink hot spot in the displayed document, a demographic hyperlink transfer request (e.g., containing demographic information of the operator) is sent to the remote web site 34A (thus teaching the claimed ("**electronically delivering [user profile information]**"). *Id.*, 3:45-52, 3:62-4:3, 4:19-33, 5:34-43, 5:61-6:5, Figs. 2, 3. In doing so, the demographic hyperlink transfer request is passed from the entry web site 32A to the remote web site 34A by the end-user computer 30 (e.g., based on the entry web site 32A causing it to do so). *Id*. It is my opinion that delivering user profile information via a redirect in Madhavan-Park-Martinez and Madhavan-Park-Kato-Martinez would have been obvious to a POSA. For example, doing so would have been a known method for sending demographic information (in the presence or absence of encryption) that would be more efficient and maintain user privacy in targeted advertisements and/or other demographic-based responses. Ex. 1169, 4:50-5:7, 6:10-17. For example, as described in Minor, this method would allow demographic information to be sent, received, and processed "without [requiring] the computer operator to register at each site on the network." Ex. 1169, 4:58-60. Furthermore, the method promotes privacy as "the information can only be processed by a computer that can decode

the information" and thus computers that are not properly registered cannot process demographic information. Ex. 1169, 4:63-67. It is my opinion that by applying Minor's teachings to the systems of Madhavan-Park-Martinez and Madhavan-Park-Kato-Martinez, while the client machine 130 is accessing an online site hosted by webservers 102, the client machine 130 would be provided with (e.g., by the webservers 102 – part of the claimed "**computer equipment**") a redirect to processing servers 104 (which are part of the claimed "**computer system**." Doing so would reduce an amount of inner network traffic (e.g., between web servers 102 and processing servers 104), and would cause profile information about the user of the client machine 130 to be sent to the processing servers 104.

585. It is my opinion that a POSA would recognize that this proposed combination would improve similar systems in the same way using a known technique. For example, as is similarly described in Madhavan-Park-Martinez and Madhavan-Park-Kato-Martinez, in Minor, a user's online activity (e.g., such as accessing a web page) is used to derive user profile information, which is then sent to a server. For example, in Madhavan, such information is provided to the processing servers 104, whereas in Minor, such information is provided to the remote web site 34A. Ex. 1169, 3:45-52, 3:62-4:3, 4:19-33, Fig. 2. For example, Minor's techniques of delivering encrypted user information to the server using

redirection would be used to modify and improve Madhavan's systems. Ex. 1169, 3:45-52, 3:62-4:3, 4:19-33, 5:34-43, 5:61-6:5, Figs. 2, 3. Furthermore, communication requirements between servers would be reduced and the need to share identifiers between such servers would be eliminated due to the implementation of such redirection. Ex. 1169, 4:54-5:7. For example, as is described in Minor, there would be no reliance "upon a unique identifier that can be used to trace the different locations that a computer operator visits." Ex. 1169, 5:2-5. Similarly, Minor describes the further advantage that "since demographic information is directly passed to a computer, a separate communication session need not be initiated with a demographic database to obtain the information." Ex. 1169, 5:5-8. It is my opinion that POSA would have had a reasonable expectation of success because this combination would have required only basic network design knowledge and/or simple hardware and programming modifications, which was well within the ordinary level of skill in the art.

586. In addition, it is my opinion that a POSA would recognize that applying Minor's redirection process to Madhavan-Park-Martinez's and Madhavan-Park-Kato-Martinez's system would be a simple substitution of one known element for another to obtain predictable results. For example, this combination would substitute Madhavan-Park-Martinez's and Madhavan-Park-Kato-Martinez's transmission of profile information to the processing servers (a

first known element) with Minor's redirect (a second known element). Ex. 1169, 3:45-52, 3:62-4:3, 4:19-33, 5:34-43, 5:61-6:5, Figs. 2, 3. It is my opinion that this would yield computer equipment of the combined systems (which would include, e.g., webservers 102) providing the user profile information directly to the processing servers 104 (the claimed "**computer system**") by using a redirect to provide the information directly from the webpage being accessed by the user's online user interface device via a redirect.

587. Accordingly, for the reasons described above, Madhavan-Park-Martinez-Minor and Madhavan-Park-Kato-Martinez-Minor teaches the additional limitations included in dependent claim 105, and renders claim 105 obvious to a POSA.

2. Dependent Claim 127: "The method of claim 38 wherein automatically electronically delivering comprises, with the computer equipment, redirecting the user's online user interface device to the computer system."

588. Claim 127 of the '260 Patent depends from claim 38 and further requires "wherein automatically electronically delivering comprises, with the computer equipment, redirecting the user's online user interface device to the computer system." Ex. 1101, claim 127. As discussed above, claim 38 is taught by Madhavan-Park-Martinez and Madhavan-Park-Kato-Martinez. *See* Section XII.B.2.

589. I note that, other than their dependencies, claim 127 is nearly identical to claim 105. Therefore, it is my opinion that a POSA would have found claim 127 obvious in view of Madhavan-Park-Martinez-Minor and Madhavan-Park-Kato-Martinez-Minor for the same reasons as claim 105. *See* Section XII.G.1, above.

3. Dependent Claim 41: "The method of claim 38 wherein the step of delivering electronic user profile information derived from the online activity comprises, with the computer equipment, redirecting the first user's online user interface device during the first user's accessing of an online site via the first online access IP address."

590. Claim 41 of the '260 Patent depends from claim 38 and further requires "wherein the step of delivering electronic user profile information derived from the online activity comprises, with the computer equipment, redirecting the first user's online user interface device during the first user's accessing of an online site via the first online access IP address." Ex. 1101, claim 41. As discussed above, claim 38 is taught by Madhavan-Park-Martinez and Madhavan-Park-Kato-Martinez. Section XII.B.2.

591. Claim 41 is substantially similar to claim 127 (and thus, claim 105), but requires that the redirection of the user's online interface device occurs "during the first user's accessing of an online site via the first online access IP address." As discussed above, Minor teaches determining and delivering user profile information using redirection of the user online access interface device to a separate server (claimed "automatically electronically delivering of user profile information

includes redirecting a user's device to the computer system server"). Ex. 1169, 3:45-52, 3:62-4:3, 4:19-33, 5:34-43, 5:61-6:5, Figs. 2, 3. It is my opinion that the redirection is "during the first user's accessing of an online site via the first online access IP address," because in Minor, when the user activates a hyperlink hotspot on a webpage while accessing the webpage, the redirection occurs. Ex. 1169, 3:62-4:3. For example, Minor describes that "the entry web site 32A passes back to the end-user computer 30 the file specified by the URL command" and that "[a] browser running on the end-user computer 30 is used to display the file." *Id.* In Minor, "[w]hen the computer operator views the received file he or she may activate a hyperlink hot spot in the displayed document," which "causes a new request 16 by [SIC] sent to the entry web site 32A," which is "a hyperlink transfer request to a new computer." *Id.*

592. It is my opinion that a POSA would have found it obvious to combine the system of Madhavan-Park-Martinez and Madhavan-Park-Kato-Martinez, which e.g., provides internet access to user devices (such as a user's online interface devices) with Minor's redirection as a means of delivering user profile information. For example, in the combinations of Madhavan-Park-Martinez-Minor and Madhavan-Park-Kato-Martinez-Minor, a POSA would have applied Minor's well-known electronic communication techniques (i.e., network/URL redirection) with a profile server (e.g., Madhavan's content server 100) to the user's online interface

device to deliver the user profile information. Minor's system is similar to Madhavan's in that both describe determining user profile information and automatically delivering user profile information to a computer system. Ex. 1162, 2:62-3:52, 7:14-55, 8:43-9:3, 10:65-11:11; Ex. 1169, 3:45-52, 3:62-4:3, 4:19-53, 5:34-43, 5:61-6:17, Figs. 2, 3. Furthermore, Minor describes that the use of a "'hyperlink hot spot', which when activated, results in a call to a second web computer" is known in the art, and is "especially relevant in a commercial setting where a computer operator is accessing different computers to identify products of interest," and thus it would have been obvious to a POSA to use such a technique to deliver user profile information in the Madhavan-Park-Martinez and Madhavan-Park-Kato-Martinez system. Ex. 1169, 1:20-62.

593. There are a number of teachings, suggestions, and motivations in the prior art that would have led a POSA to modify Madhavan and to combine Madhavan with Minor in the way that I have described above. A POSA would have been motivated to modify Madhavan-Park-Martinez/Madhavan-Park-Kato-Martinez's system such that Minor's methods of redirecting profile information between computing systems would have been used as part of Madhavan's method of deriving user information for the entity 100. Ex. 1162, 2:62-3:52, 7:14-55, 8:43-9:3, 10:65-11:11; Ex. 1169, 3:45-52, 3:62-4:3, 4:19-53, 5:34-43, 5:61-6:17, Figs. 2, 3. For example, Minor's redirect method would have been useful for providing a

streamlined method of registering the user and automatically delivering user profile information to the data storage module 106 of the entity 100 that is "transparent" to the user. *Id.* A POSA would have understood that Minor's process is "transparent" to the user because the forced transfer (redirect) occurs automatically and does not require the user's attention or input. Ex. 1169, 6:2-5, Fig. 3. Therefore, implementing Minor's transparent redirect in the profile registration and delivery process would have reduced potential user confusion by performing the delivery of user profile information without the need for any user configuration or input.

594. It is also my opinion that other rationales also support my finding that the combination of Madhavan and Minor would have been obvious. For example, the combination of Madhavan and Minor merely involves the use of a known technique to improve similar systems in the same way. As I explained above, Madhavan and Minor each teach similar systems where user profile information is derived and then delivered to a server (Madhavan's entity 100 and Minor's second server 34A). Ex. 1162, 2:62-3:52, 7:14-55, 8:43-9:3, 10:65-11:11; Ex. 1169, 3:45-52, 3:62-4:3, 4:19-53, 5:34-43, 5:61-6:17, Figs. 2, 3. Madhavan's system describes collecting user information (including demographic information, user identification information, geographic information, behavior data, and/or other information), and using that information for the selection of targeted advertisements. Ex. 1162, 5:17-27, 5:52-6:12, 7:43-55, 8:9-15, 8:57-67, 9:35-67; 10:21-29, 10:47-64, 11:18-67.

Similarly, Minor's system gathers profile information (such as demographic information), and passes this information between hyperlink destinations (servers) as part of a server redirect. Ex. 1169, 2:38-41, 4:42-53, 6:2-17. Based on this profile information, demographic-tailored replies may be provided back to the user. Ex. 1169, 4:42-53.

595. As I discussed above, Minor's forced transfer of the user information via the redirect allows for the information to be delivered to the other server transparently to the user. Ex. 1169, 6:2-5, Fig. 3.

596. Accordingly, for the reasons described above, Madhavan-Park-Martinez-Minor and Madhavan-Park-Kato-Martinez-Minor teach the additional limitations included in dependent claim 41, and renders claim 41 obvious to a POSA.

H. GROUND N-O: MADHAVAN IN VIEW OF PARK AND HOWCROFT AND/OR MADHAVAN IN VIEW OF PARK, KATO, AND HOWCROFT

1. Dependent Claim 23: "The method of claim 1 wherein only advertisements satisfying criteria selected by each user are directed to the set-top box of that user."

597. Claim 23 of the '260 Patent depends from claim 1 and further requires "wherein only advertisements satisfying criteria selected by each user are directed to the set-top box of that user." Ex. 1101, claim 23. As I discussed above, claim 1 is taught by Madhavan-Park and Madhavan-Park-Kato. Section XII.A.1.

598. As I discussed above with regard to claim element [1B], Madhavan-Park and Madhavan-Park-Kato teaches causing an advertisement to be directed to a set-top box for presentation. *See* Section XII.A.1.c, supra. To the extent that Madhavan does not expressly disclose "only advertisements satisfying criteria selected by each user are directed to the set-top box of that user," Howcroft does. For example, Howcroft describes an SSO subscriber defining (e.g., via opt ins or other privacy control settings on their internet browser) "SSO subscriber advertising profile settings." Ex. 1116, ¶¶ [0048], [0055], [0083]-[0084]. In Howcroft, defining these profile settings includes indicating selected user devices through which an SSO subscriber allows advertisements to be received, what categories/types of advertising are received, acceptable advertising formats, privacy settings, or the like. Ex. 1116, ¶¶ [0048], [0055], [0083]-[0084]. Howcroft further describes storing such information and using this information to determine "appropriate advertisements to target an SSO subscriber at a specific time." Ex. 1116, ¶ [0055].

599. It is my opinion that it would have been obvious and a POSA would have been motivated to use the SSO subscriber advertising profile settings of Howcroft to derive the user profile information of Madhavan to "increase the relevance of advertisements" in the proposed combinations by allowing users to set their own criteria, as this would have been the mere use of a known technique to improve similar systems in the same way. Ex. 1116, ¶ [0031]; *See* Section XII.G,

above. For example, Howcroft teaches storing user defined advertising criteria (i.e., a known technique) in order to increase relevance of advertising and/or provide such advertising in real time (i.e., an improvement) as discussed. Ex. 1116, ¶¶ [0030]-[0031]; *See* Section XII.G, above. And because Madhavan also teaches an electronic advertisement system (i.e., a similar system) for specifically targeting individuals based on user profile information, it is my opinion that applying Howcroft's technique would have improved Madhavan's goals of tailored advertising in the same way. *See* Section XII.G, above. Finally, a POSA would have had a reasonable expectation of success in making this combination, which would have required straightforward programming modifications to include the additional criteria. This type of programming modifications were well within the ordinary level of skill in the art.

600. Accordingly, it is my opinion that the combination of Madhavan-Park-Howcroft and Madhavan-Park-Kato-Howcroft renders claim 23 obvious.

2. Dependent Claim 102: "The method of claim 61 wherein only advertisements satisfying criteria selected by each user are directed to the set-top box of that user."

601. Except for their dependencies, claims 23 and 102 are identical. Ex. 1101, claim 102. Therefore, it is my opinion that claim 102 would have been obvious to a POSA over Madhavan-Park-Howcroft and Madhavan-Park-Kato-Howcroft for the same reasons as claim 23. See Section XII.H.1, above.

3. Dependent Claim 49: "The method of claim 48 wherein the online user interface device identifier includes a cookie."

602. Claim 49 of the '260 Patent depends from claim 48 and further requires "wherein the online user interface device identifier includes a cookie." Ex. 1101, claim 49. As discussed above, claim 48 is taught by Madhavan-Park-Kato. *See* Section XII.A.40, above.

603. As I explained for claims 48 and 61, Madhavan-Park-Kato teaches collecting various user profile information, including device identifiers To the extent and Madhavan-Park-Kato does not explicitly disclose use of a cookie as part of a device identifier, Howcroft does.

604. Howcroft teaches using cookies as a method of device identification for managing devices across different online sessions and networks. Ex. 1116, ¶ [0061]. In particular, Howcroft uses cookies to uniquely identify devices so that the devices can be identified (and have their identities verified) without requiring the user or device to perform an authentication process. *Id.* Instead, Howcroft's system stores a unique cookie on a user's device and reads that cookie form the user's device when the system is contacted. *Id.* In this way, Howcroft's system is able to confirm that a device's and/or user's identity upon being contacted. *Id.*

605. Because Madhavan-Park-Kato teaches tracking devices and device activity (e.g., profile information) using a device-specific identifier, it would have been obvious to a POSA to use Howcroft's cookies as one way of doing so. For

example, this modification to Madhavan-Park-Kato would have been obvious to a POSA, and a POSA would have been motivated to make this modification, because it would have been a mere combination of prior art elements according to known methods to yield predictable results. The known prior art elements are an STB in Madhavan-Park-Kato for which profile tracking and identification across different access points would have been needed and desirable, and Howcroft's use of identifying cookies that allows network systems to uniquely identify known devices (e.g., devices that previously interfaced with the system).

606. The known method is taught by Howcroft: generating and using cookies to as a unique device identifier that allows tracking of the device (and corresponding user) across different sites and content or service providers. Ex. 1116, ¶ [0061]. Howcroft discloses that a cookie may be placed on a user's device and used to identify that device even when the device moves from network to network or site to site. Ex. 1116, ¶ [0061]. One benefit of using a cookie is that it eliminates the need for a client device to authenticate time and again when attempting to access a site or provider from different access points. Accordingly, using identification cookies instead of or in addition to an IP address would have furthered the same goal of user-specific or device-specific tracking activity by allowing network systems to recognize certain devices and corresponding users irrespective of the IP address (or other access identifier) from which the device or user is connecting to the network.

Ex. 1116, ¶ [0061]; Ex. 1162, 5:59-66. Moreover, with the increasing number of internet-connected devices during the time of the alleged invention of the '260 Patent, a POSA would have recognized that using an IP address alone might not be sufficient to uniquely identify a device, as I discussed with respect to claim 1 (e.g., element [1A]). *See* Section XII.A.1.b. That is, a device may be required to share an IP address or to relinquish an IP address and change to another address when connecting and reconnecting to the public internet. Accordingly, using a cookie, either alone or in combination with an IP address, would have achieved the requisite unique identification.

607. A POSA would also have found the resulting combination of Madhavan-Park-Kato with Howcroft to have predictable results. For example, a POSA would have readily appreciated that modifying Madhavan-Park-Kato according to Howcroft's methodology would have resulted in a system where profile information may be identified using a device-specific cookie. A POSA would have also had a reasonable expectation of success because the combination would have only required minor programming modifications that were well within the skill of art at the time.

608. Accordingly, it is my opinion that Madhavan-Park-Kato-Howcroft renders claim 49 obvious to a POSA.

4. Dependent Claim 66

609. Except for their dependencies, claims 49 and 66 are identical. *See* Ex. 1101, claims 49, 66. Therefore, it is my opinion that a POSA would have found claims 66 obvious in view of Madhavan-Park-Howcroft and Madhavan-Park-Kato-Howcroft for the same reasons as claim 49. *See* Section XII.H.3, above.

5. Dependent Claim 50: "The method of claim 48 wherein the online user interface device identifier includes a tag."

610. Claim 50 of the '260 Patent depends from claim 48 and further requires "wherein the online user interface device identifier includes a tag." Ex. 1101, claim 50. As discussed above, claim 48 is taught by Madhavan in view of Park, Kato, and Howcroft. *See* Section XII.A.40.

611. It is my opinion that a POSA would have understood that a cookie constitutes a "**tag**," as required by claim 50. I note that the '260 Patent does not provide an express definition of "**tag**" and in fact it interchangeably refers to cookies or tags as examples of the device identifiers. Ex. 1101, 17:40-18:14. Further, the '260 Patent describes the functionality of a cookie, and then labels the element performing that functionality as a "**tag**," ("[t]he CAS then uniquely identifies the STB using a tag it previously placed on the STB"). Ex. 1101, 19:14-15. I also understand that the inventor of the '260 Patent has elsewhere explained that a cookie is an example of a tag. Ex. 1138, 3:17-23 ('260 inventor explaining that "a cookie

is [] one example of a possible tag" and "[a] tag generally is a unique identifier used to mark [a] person electronically").

612. As I discussed above for claim 49 (Section XII.H.3), it is my opinion that a POSA would have found it obvious to combine Howcroft with the Madhavan-Park-Kato system such that Howcroft's use of cookies would have been used as, or as part of, the device identifier used to track devices in Madhavan's targeted advertising system. Ex. 1116, ¶ [0061]; Ex. 1162, 5:59-66. As also explained for claim 49, this modification would have been obvious because it would have been the mere combination of prior art elements according to known methods to yield predictable results. Section XII.H.3, above.

613. Accordingly, it is my opinion that Madhavan-Park-Kato- Howcroft teach the additional limitations included in dependent claim 50, and render claim 50 obvious to a POSA.

6. Dependent Claim 70

614. Except for their dependencies, claims 50 and 70 are identical. *See* Ex. 1101, claims 50, 70. Therefore, it is my opinion that a POSA would have found claim 70 obvious in view of Madhavan-Park-Howcroft and Madhavan-Park-Kato-Howcroft for the same reasons as claim 50. *See* Section XII.H.5, above.

I. GROUNDS P-Q: MADHAVAN IN VIEW OF PARK, MARTINEZ, AND HOWCROFT AND/OR MADHAVAN IN VIEW OF PARK, KATO, MARTINEZ, AND HOWCROFT

1. Dependent Claims 111 and 132

615. Except for their dependencies, claims 49, 66, 111, and 132 are identical. *See* Ex. 1101, claims 49, 66, 111, and 132. Claims 26 and 38, upon which claims 111 and 132 ultimately depend, respectively, are taught by Madhavan-Park-Martinez and Madhavan-Park-Kato-Martinez. The addition of Martinez does not change my opinion with respect to the obviousness of the claimed features. Therefore, it is further my opinion that a POSA would have found claim 111 obvious in view of Madhavan-Park-Kato-Martinez-Howcroft for substantially the same reasons as claim 49 (*See* Section XII.H.3, above) and would have found claim 132 obvious in view of Madhavan-Park-Martinez-Howcroft and Madhavan-Park-Kato-Martinez-Howcroft for substantially the same reasons as claim 66. *See* Section XII.H.4, above.

2. Dependent Claims 112 and 136

616. Except for their dependencies, claims 50, 70, 112, and 136 are identical. *See* Ex. 1101, claims 50, 70, 112, and 136. Claims 26 and 38, upon which claims 111 and 132 ultimately depend, respectively, are taught by Madhavan-Park-Martinez and Madhavan-Park-Kato-Martinez. The addition of Martinez does not change my opinion with respect to the obviousness of the claimed features.

Therefore, it is further my opinion that a POSA would have found claim 112 obvious in view of Madhavan-Park-Kato-Martinez-Howcroft for substantially the same reasons as claim 50 (*See* Section XII.H.5, above) and would have found claim 136 obvious in view of Madhavan-Park-Martinez-Howcroft and Madhavan-Park-Kato-Martinez-Howcroft for substantially the same reasons as claim 70. *See* Section XII.H.6, above.

J. GROUND R-S: MADHAVAN IN VIEW OF PARK AND BRANAM AND/OR MADHAVAN IN VIEW OF PARK, KATO AND BRANAM

1. Dependent Claim 51: "The method of claim 1 wherein the set-top box is further indicated by a set-top box identifier that includes a device serial number or a portion thereof."

617. Claim 51 of the '260 Patent depends from claim 1 and further requires "wherein the set-top box is further indicated by a set-top box identifier that includes a device serial number or a portion thereof." Ex. 1101, claim 51. As discussed above, claim 1 is taught by Madhavan in view of Park, and Madhavan in view of Park and Kato. *See* Section XII.A.1.

618. In my above discussion of claim 1 (Section XII.A.1), I explained that each of Madhavan in view of Park, and Madhavan in view of Park and Kato, discloses use of device identifiers to identify a device or user between different online sessions or networks, so that user activity may be properly correlated to the right user or device. Ex. 1162, 7:15-19; Ex. 1164, ¶¶ [0005]-[0006], [0017]-[0020],

[0030]-[0038], [0040]-[0047], [0049]-[0053], [0066]-[0070]. For example, Madhavan describes using IP addresses, while Kato discloses use of at least MAC addresses. Ex. 1162, 7:15-19; Ex. 1164, ¶¶ [0005]-[0006], [0017]-[0020], [0030]-[0038], [0040]-[0047], [0049]-[0053], [0066]-[0070]. However, Madhavan-Park and Madhavan-Park-Kato do not explicitly teach using a serial number as such an identifier for tracking devices and/or users, but it would have been obvious to use a serial number as a device identifier as taught by Branam.

619. Branam teaches a system for providing user-specific alerts and other customized content, including targeted advertising. Ex. 1170, Abstract. More specifically, Branam discloses a network communication environment configured to provide targeted advertising and customized content to users through devices such as a set-top box. Ex. 1170, ¶¶ [0033]-[0038], Figs. 1, 2. One of the ways in which the devices can be identified in Branam's system is through the use of the device's product serial number. Ex. 1170, ¶¶ [0043]-[0048], [0053]. For example, Branam explains that the serial number may be used to target customized content to a user's set-top box corresponding to that unique identifier. Ex. 1170, ¶¶ [0053], [0061].

620. It would have been obvious to a POSA that, in each system of Madhavan-Park and Madhavan-Park-Kato, the set-top box may be further identified by a product serial number, as taught in Branam. This modification (e.g., the addition or substitution of one identifier with the serial number identifier disclosed

by Branam) would have been a straightforward combination of prior art elements according to known methods to yield predictable results. The prior art elements are Madhavan-Park's and Madhavan-Park-Kato's systems that identify and track set-top boxes over a network to collect user profile information, and Branam's method of using a product serial number as one type of unique device identifier. That is, a POSA would have readily appreciated that Branam's product serial numbers are just another piece of information that may be used to uniquely identify devices. The predictable result is that the serial number is an unchanging piece of data used to identify the STB instead of or in addition to other identifiers in the user profile.

621. Additionally, Branam teaches a known method for combining the prior art elements. Branam provides a detailed explanation as to how device identifiers, such as a set-top box serial number, may be used to deliver and target customized content. For example, Branam teaches that a product serial number may be provided to a host system from a user's device at the time of provisioning services or registration, and subsequently used for identification and authentication. Ex. 1170, ¶¶ [0043]-[0046]. One of skill in the art would have expected that the combination of a product serial number and the use of device identifiers for profile management by Madhavan-Park's and Madhavan-Park-Kato's systems would have resulted in the product serial number being used as a unique identifier (e.g., in addition to an IP address or MAC address) to recognize devices and corresponding users irrespective

of the online session or network access point. Ex. 1170, ¶¶ [0060]-[0065]. For example, the combination would have predictably resulted in allowing the user profile tracking system of Madhavan-Park and Madhavan-Park-Kato to correlate user activity even when a device's IP address has changed. Use of an additional non-changing, fixed identifier would thus have been beneficial. A POSA would have had a reasonable expectation of success because this combination would have required only straightforward programming modifications that were within the skill of art at the time.

622. Accordingly, it is my opinion that Madhavan-Park-Branam and Madhavan-Park-Kato-Branam teach the additional limitations included in dependent claim 51, and render claim 51 obvious to a POSA, for at least the reasons I explain above.

2. Dependent Claim 67

623. Except for their dependencies, claim 67 is substantially identical to claim 51. See Ex. 1101, claim 67. The only difference is the insubstantial wording change from "wherein the set-top box is further indicated by a set-top box identifier that includes" (claim 51) to "wherein the set-top box identifier includes." It is my opinion that my analysis for claim 51 is applicable to these claims. Therefore, it is my opinion that claim 67 would have been obvious to a POSA in view of Madhavan-

Park-Branam and Madhavan-Park-Kato-Branam for the same reasons as claim 51. *See* Section XII.J.1, above.

3. Dependent Claim 53: "The method of claim 1 wherein the set-top box is further indicated by a set-top box identifier that includes a username, a pseudonym, or a confirmation number."

624. Claim 53 of the '260 Patent depends from claim 1 and further requires "wherein the set-top box is further indicated by a set-top box identifier that includes a username, a pseudonym, or a confirmation number." Ex. 1101, claim 53. As discussed above, claim 1 is taught by Madhavan in view of Park, and Madhavan in view of Park and Kato. *See* Section XII.A.1.

625. In my above discussion of claims 1 and 51 (Sections XII.A.1, XII.J.1), I explained that each of Madhavan in view of Park, and Madhavan in view of Park and Kato, discloses use of device identifiers, including IP addresses and MAC addresses, to identify a device or user between different online sessions or networks. Ex. 1162, 7:15-19; Ex. 1164, ¶¶ [0005]-[0006], [0017]-[0020], [0030]-[0038], [0040]-[0047], [0049]-[0053], [0066]-[0070]. This allows user activity to be properly correlated to the right user or device. To the extent Madhavan-Park and Madhavan-Park-Kato do not explicitly teach including a "username, a pseudonym, or a confirmation number," as recited in claim 53, as part of a device identifier, Branam does.

626. As I explained for claim 51, Branam teaches a system for providing customized content, including targeted advertising, to user devices. Ex. 1170, Abstract, ¶¶ [0033]-[0038], Figs. 1, 2. Branam teaches that one way devices associated with a user's account may be identified is by using a name assigned to that device, such as LIVINGROOM_TV. Ex. 1170, ¶¶ [0053]-[0054], [0063], [0080]. It is my opinion that a user-assigned device name describes the claimed "**pseudonym**," because it is a name that is used in place of a real name of the device (e.g., a MAC address, serial number, or the like, to the extent an electronic device has a real name). That is, a POSA would recognize that the device name designated by the user may be any name, however accurate or inaccurate of a description, and that such a name is a "**pseudonym**."

627. Branam also discloses that a set-top box identifier may include an association between a device identifier and user credentials in order to target customized content to any device corresponding to that user. Ex. 1170, ¶¶ [0043]-[0048], [0060]-[0065], [0079]-[0080]. For example, if a user is accessing content through a PC, the same advertisement targeting profile may be used as for when the user is accessing content from a set-top box. Branam teaches that user credentials may include a username (i.e., the claimed "**username**"). Ex. 1170, ¶ [0061]. And because the user credentials are associated with devices (e.g., in an account profile), a POSA would recognize that in Branam, the username is part of a device identifier

that indicates a device such as a set-top box. For example, in order to appropriately target a personalized programming guide or advertising to a particular user, Branam's system would need to identify the device associated with that user's username. Ex. 1170, ¶¶ [0056], [0061], [0079]-[0080]. Accordingly, Branam's username indicates which device the corresponding user is currently accessing.

628. It would have been obvious to a POSA that, in each of Madhavan-Park and Madhavan-Park-Kato, the set-top box may be further identified by a either the user-assigned device name (claimed "**pseudonym**") or a username (claimed "**username**") or both, as taught in Branam. This modification would have been obvious for substantially the same reasons I explained for claim 51. Section XII.J.1. That is, a POSA would have found the modification to Madhavan-Park and Madhavan-Park-Kato in view of Branam to have been the straightforward combination of prior art elements according to known methods to yield predictable results. The prior art elements are the use of device identifiers by Madhavan-Park's and Madhavan-Park-Kato's systems to track activity and target content to set-top boxes and Branam's use of device names and/or usernames as further forms of device identification.

629. Branam teaches a known method for combining the prior art elements. Branam provides a detailed explanation as to how the username and/or device name may be stored in association with one another in a user account. Ex. 1170, ¶¶ [0043]-

[0046], [0063]-[0065]. That account information (e.g., profile) may then be used to create and target custom content to users. Ex. 1170, ¶¶ [0051]-[0054], [0071]-[0080], Fig. 10. One of skill in the art would have expected that the combination of a username or device name or both and Madhavan's (as modified by Park) use of device identifiers for profile management would have resulted in those identifiers being used to (e.g., in addition to an IP address or MAC address) recognize and target devices and corresponding users irrespective of the online session or network access point. Ex. 1170, ¶¶ [0056], [0060]-[0065], [0079]-[0080]. For example, the combination would have predictably resulted in allowing the user profile tracking system of Madhavan-Park and Madhavan-Park-Kato to correlate user activity even when a device's IP address has changed, or when a user is using a different device, or when different users share one or more devices. Ex. 1170, ¶¶ [0043]-[0046], [0060]-[0065], [0107]. A POSA would have had a reasonable expectation of success because this combination would have required only straightforward programming modifications that were within the skill of the art at the time.

630. Accordingly, it is my opinion that Madhavan-Park-Branam and Madhavan-Park-Kato-Branam teach the additional limitations included in dependent claim 53, and render claim 53 obvious to a POSA, for at least the reasons I explain above.

4. Dependent Claim 69

631. Except for their dependencies, claims 53 and 69 are nearly identical but for inconsequential wording changes. *See* Ex. 1101, claims 53, 69. Therefore, it is my opinion that a POSA would have found claim 69 obvious in view of Madhavan-Park-Branam and Madhavan-Park-Kato-Branam for the same reasons as claim 53. *See* Section XII.J.3, above

K. GROUND T-U: MADHAVAN IN VIEW OF PARK, MARTINEZ, AND BRANAM AND/OR MADHAVAN IN VIEW OF PARK, KATO, MARTINEZ, AND BRANAM

1. Dependent Claims 113 and 133

632. Except for their dependencies, 113 and 133 are identical (claim 113) or nearly identical (claim 133) to claim 51. *See* Ex. 1101, claims 51, 113, 133. As to claim 133, the only difference is the insubstantial wording change from "wherein the set-top box is further indicated by a set-top box identifier that includes" (claim 51) to "wherein the set-top box identifier includes." Claims 113 and 133 are ultimately dependent on claims 26 and 38, respectively, which are taught by Madhavan-Park-Martinez and Madhavan-Park-Kato-Martinez as I explained above. Sections XII.B.1, XII.B.2. The addition of Martinez does not change my opinion of the obviousness of modifying Madhavan in view of Branam with respect to the elements of claim 51. Therefore, it is my opinion that claim 133 would have been obvious to a POSA in view of Madhavan-Park-Martinez-Branam and Madhavan-Park-Kato-Martinez-Branam and (due to dependency) claim 113 would have been

obvious to a POSA in view of Madhavan-Park-Kato-Martinez-Branam for substantially the same reasons as claim 51. *See* Section XII.J.1, above.

2. Dependent Claims 115 and 135

633. Except for their dependencies, claims 53, 115 and 135 are identical (claim 115) or nearly identical but for inconsequential wording changes (claim 135). *See* Ex. 1101, claims 53, 115, 135. Claims 115 and 135 are ultimately dependent on claims 26 and 38, respectively, and, as I have explained, Madhavan-Park-Martinez or Madhavan-Park-Kato-Martinez teaches those claims and the intervening dependent claims. XII.B.1, XII.B.2. And as I explained above for claim 53, Madhavan-Park-Branam and Madhavan-Park-Kato-Branam teach use of MAC addresses as a device identifier for set-top boxes. Section XII.J.3. The addition of Martinez does not change my opinion of the obviousness of modifying Madhavan in view of Branam with respect to the elements of claim 53. Therefore, it is my opinion that a POSA would have found claims 135 obvious in view of Madhavan-Park-Martinez-Branam and Madhavan-Park-Kato-Martinez-Branam, and (due to dependency) claim 115 obvious in view of Madhava-Park-Branam for substantially reasons as claim 53. *See* Section XII.J.3, above.

XIII. EVIDENCE OF NON-OBVIOUSNESS

634. It is my understanding that in order for evidence of non-obviousness or secondary considerations to be relevant, there must be a nexus between the claimed

invention and the evidence. I am not aware of any evidence of non-obviousness or secondary considerations.

XIV. CONCLUSION

635. All of the statements made in this declaration of my own knowledge are true. All statements made based on information and belief are believed to be true. Further, these statements are made with the knowledge that willful false statements and the like so made are punishable by fine or imprisonment, or both, under § 1001 of Title 18 of the United States Code.

Date: 3/1/2024

David B. Lett

David Lett

APPENDIX A

Ex. 1101:	U.S. Pat. No. 7,861,260 ("the '260 Patent")
Ex. 1102:	Expert Declaration of Mr. David B. Lett
Ex. 1103:	Curriculum Vitae of Mr. David B. Lett
Ex. 1104:	Excerpts of File History of U.S. Pat. No. 7,861,260
Ex. 1105:	Excerpts from Case Docket of *Meta Platforms Inc. v. AlmondNet, Inc. et al.*, IPR2022-00773 (March 28, 2022)
Ex. 1106:	U.S. Pat. App. Pub. No 2007/0283384 ("Haeuser")
Ex. 1107:	*Reserved*
Ex. 1108:	*Reserved*
Ex. 1109:	*Reserved*
Ex. 1110:	*Reserved*
Ex. 1111:	*Reserved*
Ex. 1112:	Excerpts from E. D. Zwicky et al., *Building Internet Firewalls* (2d ed. 2000) ("Zwicky")
Ex. 1113:	U.S. Pat. App. Pub. No. 2004/0076180 ("Satapati")
Ex. 1114:	U.S. Pat. App. Pub. No. 2006/0271690 ("Banga690")
Ex. 1115:	Independent Claim Comparison Chart for U.S. Pat. No. 7,861,260
Ex. 1116:	U.S. Pat. App. Pub. No. 2008/0201731 ("Howcroft")
Ex. 1117:	*Reserved*
Ex. 1118:	*Reserved*
Ex. 1119:	*Reserved*
Ex. 1120:	U.S. Pat. App. Pub. No. 2007/0180147 ("Leigh")

Ex. 1121:	*Reserved*
Ex. 1122:	*Reserved*
Ex. 1123:	*Reserved*
Ex. 1124:	U.S. Pat. App. Pub. No. 2005/0096980 ("Koningstein")
Ex. 1125:	*Reserved*
Ex. 1126:	*Reserved*
Ex. 1127:	*Reserved*
Ex. 1128:	*Reserved*
Ex. 1129:	*Reserved*
Ex. 1130:	*Reserved*
Ex. 1131:	*Reserved*
Ex. 1132:	U.S. Pat. No. 6,282,548 ("Burner")
Ex. 1133:	U.S. Pat. No. 6,036,601 ("Heckel")
Ex. 1134:	U.S. Pat. App. Pub. No. 2005/0096978 ("Black")
Ex. 1135:	Request for Comments: 1631, "The IP Network Address Translator (NAT)" (1994) ("RFC 1631")
Ex. 1136:	Hagel *et al.*, *Net Worth: Shaping Markets When Customers Make the Rules* (1999)
Ex. 1137:	Zeff *et al.*, *Advertising on the Internet* (1999) ("Zeff")
Ex. 1138:	U.S. Pat. No. 8,280,758 ("the '758 Patent")
Ex. 1139:	*Reserved*
Ex. 1140:	*Reserved*
Ex. 1141:	Excerpts from *AlmondNet, Inc v. Freewheel Media, Inc.*, No. 1:23-cv-00220-MN (D. Del.) ("Corresponding District Court Litigation")

Ex. 1142:	U.S. Pat. No. 9,036,981 ("Barton")
Ex. 1143:	U.S. Pat. No. 7,634,789 ("Gerba")
Ex. 1144:	U.S. Pat. App. Pub. No. 2002/0174444 ("Gatto")
Ex. 1145:	U.S. Pat. App. Pub. No. 2002/0083445 ("Flickinger")
Ex. 1146:	U.S. Pat. App. Pub. No. 2008/0040742 ("Howcroft742")
Ex. 1147:	Jakob Nielsen, *Request Marketing* (Oct. 2000), https://www.nngroup.com/articles/request-marketing/
Ex. 1148:	Bettina Fabos, *The Commercial Search Engine Industry and Alternatives to the Oligopoly* (Mar. 2006) EastBound Journal
Ex. 1149:	Susan Young, *Getting the Message: How the Internet is Changing Advertising* (May 16, 2000), https://hbswk.hbs.edu/item/getting-the-message-how-the-internet-is-changing-advertising
Ex. 1150:	U.S. Pat. App. Pub. No. 2002/00998842 ("Jennings")
Ex. 1151:	*Reserved*
Ex. 1152:	*Reserved*
Ex. 1153:	ANSI/IEEE Std 802.11, 1999 Edition, Part 11: Wireless LAN Medium Access Control (MAC) and Physical Layer (PHY) Specifications
Ex. 1154:	*Reserved*
Ex. 1155:	*Reserved*
Ex. 1156:	*Reserved*
Ex. 1157:	*Reserved*
Ex. 1158:	*Reserved*
Ex. 1159:	Declaration of Dr. Sylvia Hall-Ellis

Ex. 1160:	Institution Decision from *Meta Platforms, Inc. f/k/a Facebook, Inc. v. Intent IQ, LLC et al.*, IPR2023-01281, Paper 7 (February 21, 2024)
Ex. 1161:	U.S. Pat. No. 6,427,170 ("Sitaraman")
Ex. 1162:	U.S. Pat. No. 8,180,674 ("Madhavan")
Ex. 1163:	U.S. Pat. App. Pub. No. 2006/0039386 ("Park")
Ex. 1164:	U.S. Pat. App. Pub. No. 2004/0003292 ("Kato")
Ex. 1165:	U.S. Pat. App. Pub. No. 2008/0120178 ("Martinez")
Ex. 1166:	U.S. Pat. No. 7,653,923 ("Flickinger923")
Ex. 1167:	U.S. Pat. No. 7,376,714 ("Gerken")
Ex. 1168:	*Reserved*
Ex. 1169:	U.S. Pat. No. 5,740,252 ("Minor")
Ex. 1170:	U.S. Pat. App. Pub. No. 2007/0206773 ("Branam")

APPENDIX B

Family Tree

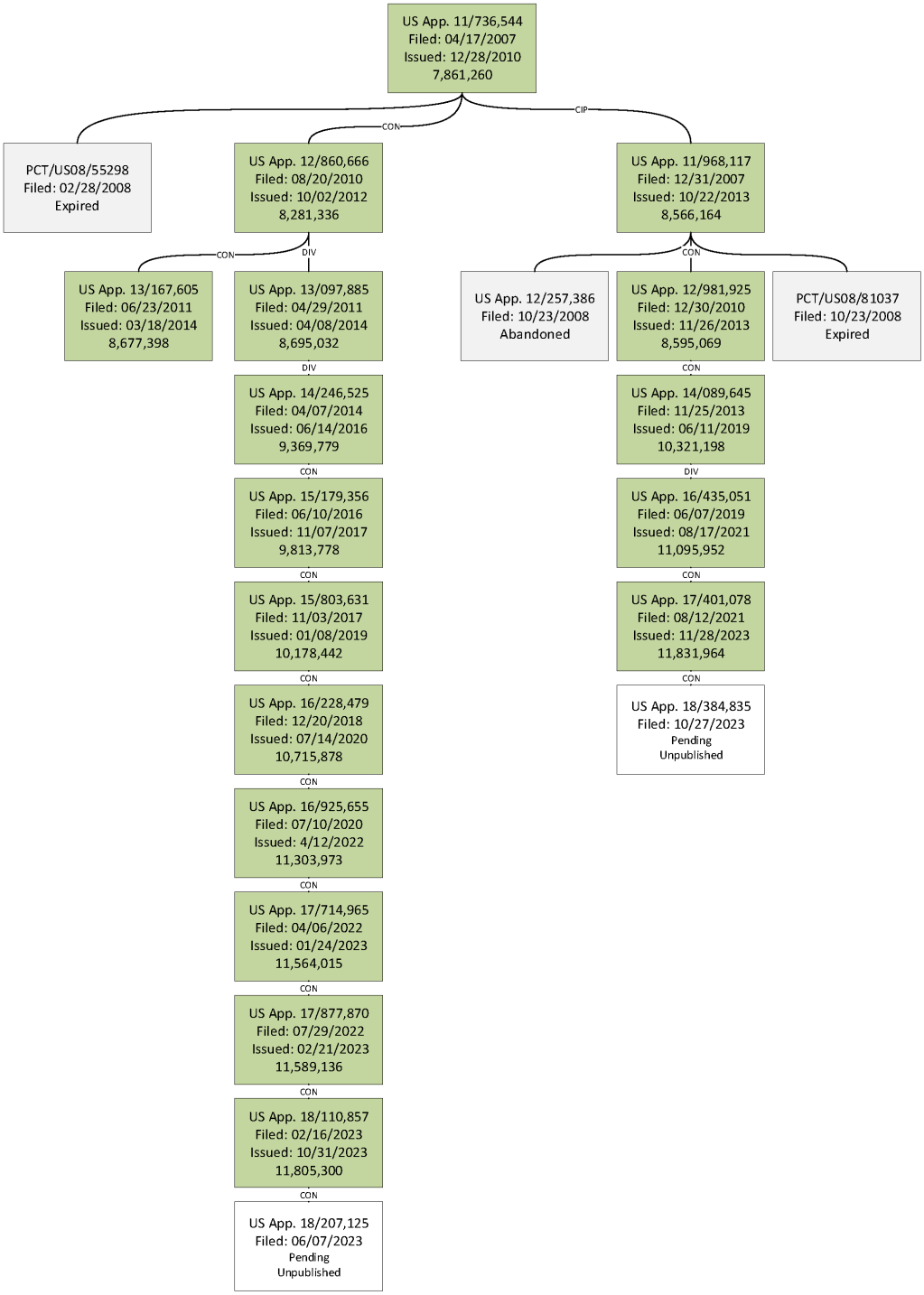

APPENDIX C

Claims Listing Appendix
US Pat. No. 7,861,260

Designation	Claim Language
Claim 1	
[1pre]	1. A method implemented using a programmed hardware computer system, the method comprising:
[1A]	(a) for each of a multitude of users, with the computer system, electronically associating an online access IP address of the user and a set-top box IP address of that user based on a common IP address, wherein network traffic is routed via the common IP address to both an online user interface device and a set-top box of that user; and
[1B]	(b) using user profile information derived from online activity from a first online user interface device via a first one of the online access IP addresses of the multitude of users, with the computer system automatically causing a first television advertisement to be directed to a set-top box for presentation via that set-top box, selectively, wherein the set-top box is indicated by the set-top box IP address associated with the first online access IP address.
Claim 2	
2	2. The method of claim 1 wherein neither the user profile information in part (b) nor the association between the first online access IP address and its associated set-top box IP address includes personally identifiable information.
Claim 3	
[3A]	3. The method of claim 1: (i) further comprising, using user profile information derived from online activity from a second online user interface device via a second one of the online access IP addresses of the multitude of users, with the computer system automatically causing a second television advertisement to be directed to a second set top box for presentation via that set-top box, selectively, wherein the second set-top box is indicated by the set-top box IP address associated with the second online access IP address,

Designation	Claim Language
[3B]	(ii) wherein which television advertisement is directed to or presented via which set-top box depends on differences between the online activities from the first and second online user interface devices, respectively.
Claim 4	
4	4. The method of claim 3 wherein neither the user profile information in part (i) nor the association between the second online access IP address and its associated set-top box IP address includes personally identifiable information.
Claim 5	
5	5. The method of claim 1 further comprising storing in the computer system electronic associations between the online access IP addresses and the set-top box IP addresses.
Claim 6	
6	6. The method of claim 1 wherein the online activity comprises requesting a search.
Claim 7	
7	7. The method of claim 1 wherein the first television advertisement is caused to be directed to the set-top box upon first being contacted by the set-top box after the user profile information is derived.
Claim 8	
8	8. The method of claim 1 wherein the first television advertisement is selected from among a plurality of possible television advertisements based at least in part on the user profile information derived from the online activity from the first online access IP address.
Claim 9	
9	9. The method of claim 8 wherein the first television advertisement is selected based at least partly on demographic or behavioral attributes included in the user profile information.
Claim 10	
10	10. The method of claim 1 wherein the first television advertisement is selected from among a plurality of possible television advertisements based at least in part on the television content viewed at the time the first television advertisement is to be presented by the set-top box.

Designation	Claim Language
Claim 11	
11	11. The method of claim 1 wherein the common IP address is an IP address dynamically assigned to a modem or router used by the user for online access and connected to the user's set-top box.
Claim 12	
[12A]	12. The method of claim 1 further comprising: (i) receiving at the computer system an identifier corresponding to the set-top box of the user; and
[12B]	(ii) with the computer system causing the television advertisement to be transmitted only if directed to the set-top box corresponding to the identifier.
Claim 13	
13	13. The method of claim 1 wherein part (a) comprises the act of storing the common IP address, and further comprising updating the common IP address of the user.
Claim 14	
14	14. The method of claim 1 wherein part (a) comprises the act of storing the common IP address, and further comprising periodically updating the common IP address of the user.
Claim 15	
[15A]	15. The method of claim 1 wherein: (i) the user profile information in part (b) includes a list of online access IP addresses corresponding to specific online activities and times and dates corresponding to each of the online activities; and
[15B]	(ii) the computer system causes the television advertisement to be directed to the set-top box of one of the users only if any of the listed online access IP addresses corresponding to the specific online activities and the corresponding dates and times of the online activities match the common IP address assigned to that user and the date and time corresponding thereto.
Claim 16	
16	16. The method of claim 15 wherein part (a) comprises the act of storing the common IP address and dates and times corresponding thereto in the computer system, and further comprising, with the computer system, periodically updating

Designation	Claim Language
	(i) the common IP address and times and dates corresponding thereto or (ii) the list of online access IP addresses corresponding to specific online activities and time and dates corresponding to each of the online activities.
Claim 17	
17	17. The method of claim 1 wherein the computer system is a central ad server and the first television advertisement is received at the central ad server and directed to the set-top box.
Claim 18	
18	18. The method of claim 1 wherein part (b) comprises, with the computer system, directing instructions to a profile provider, to an online site, or to an independent ad server to direct the first television advertisement to the set-top box.
Claim 19	
19	19. The method of claim 1 wherein part (b) comprises, with the computer system, directing instructions to the set-top box to retrieve the first television advertisement from a profile provider, from an online site, or from an independent ad server.
Claim 20	
20	20. The method of claim 1 wherein the computer system causes the first television advertisement to be directed only in response to a request for advertisements originating from the user's set-top box.
Claim 21	
21	21. The method of claim 1 wherein the computer system causes the first television advertisement to be directed without a request for advertisements originating from the user's set-top box.
Claim 22	
22	22. The method of claim 1 wherein the online access IP address of each user is an IP address associated with a modem or router used by that user for online access.
Claim 23	
23	23. The method of claim 1 wherein only advertisements satisfying criteria selected by each user are directed to the set-top box of that user.

Designation	Claim Language
Claim 24	
24	24. The method of claim 1 further comprising receiving a revenue amount as a result of directing the advertisement.
Claim 25	
25	25. The method of claim 1 further comprising paying a revenue amount to a profile provider as a result of using the user profile information in part (b).
Claim 26	
[26pre]	26. A method implemented using computer equipment, the method comprising:
[26A]	(a) with the computer equipment, automatically electronically delivering electronic user profile information to a computer system that includes a server that electronically associates, for each of a multitude of users, an online access IP address of the user and a set-top box IP address of that user based on a common IP address,
[26B]	(b) wherein network traffic is routed via the common IP address for both an online user interface device and a set-top box of that user,
[26C]	(c) wherein delivered user profile information of a first user of the multitude of users (i) is derived from online activity of the first user from a first online user interface device via a first online access IP address and (ii) includes identification of the first online access IP address and the time and date of the online activity, and
[26D]	(d) as a result of which delivery, a first television advertisement can be directed to a set-top box for presentation via that set-top box, selectively, wherein the set-top box is indicated by the set-top box IP address that the server associates with the first online access IP address.
Claim 27	
27	27. The method of claim 26 wherein neither the user profile information delivered in part (a) nor the association between the first online access IP address and its associated set-top box IP address includes personally identifiable information.
Claim 28	
[28A]	28. The method of claim 26:

Designation	Claim Language
	(e) wherein delivered user profile information of a second user of the multitude of users (i) is derived from online activity of the second user from a second online user interface device via a second online access IP address and (ii) includes identification of the second online access IP address and the time and date of the online activity,
[28B]	(f) as a result of which delivery, a second television advertisement, different from the first television advertisement, is directed to a second set-top box for presentation via that set-top box, selectively, wherein the second set-top box is indicated by the set-top box IP address that the server associates with the second online access IP address, for selective presentation via that set-top box, and
[28C]	(g) wherein which television advertisement is directed to or presented via which set-top box depends on differences between the online activities from the first and second online user interface devices, respectively.
Claim 29	
29	29. The method of claim 26 further comprising receiving a revenue amount from a proprietor of the computer system as a result of the electronic delivering act.
Claim 30	
30	30. The method of claim 26 further comprising receiving a revenue amount as a result of the electronic delivering act, wherein the revenue amount is received in response to each instance in which revenue is generated as a result of presenting the selected television advertisement via the set-top box indicated by the set-top box IP address associated with the first online access IP address.
Claim 31	
31	31. The method of claim 26 further comprising, with the computer equipment, automatically selecting the first television advertisement based on the user profile information.
Claim 32	
32	32. The method of claim 31 wherein the first television advertisement is selected based at least partly on demographic

Designation	Claim Language
	or behavioral attributes included in the derived user profile information.
Claim 33	
33	33. The method of claim 26 further comprising receiving a revenue amount from a provider of the television advertisement as a result of electronically delivering the user profile information.
Claim 34	
34	34. The method of claim 26 further comprising automatically receiving a revenue amount as a result of direction of the first television advertisement.
Claim 35	
35	35. The method of claim 26 further comprising, with the computer equipment, electronically delivering the first television advertisement to the computer system for subsequent direction to the set-top box.
Claim 36	
36	36. The method of claim 26 further comprising, with the computer equipment, directing the television advertisement to the set-top box in response to instructions received from the computer system.
Claim 37	
37	37. The method of claim 26 wherein the step of delivering user profile information comprises delivering the first user online access IP address.
Claim 38	
[38pre]	38. A method implemented using computer equipment, the method comprising:
[38A]	(a) with the computer equipment, automatically electronically delivering electronic user profile information to a computer system that includes a server that electronically associates, for each of a multitude of users, an online user interface device identifier, which indicates an online user interface device of the user, and a set top box identifier, which indicates a set-top box of that user, which electronic association is based on a common IP address,

Designation	Claim Language
[38B]	(b) wherein network traffic is routed via the common IP address for both the online user interface device and the set-top box of that user,
[38C]	(c) wherein delivered user profile information of a first user of the multitude of users (i) is derived from online activity of the first user from the first user's online user interface device via a first online access IP address and (ii) includes identification of the first online IP address and the time and date of the online activity, and
[38D]	(d) as a result of which delivery, a first television advertisement can be directed to a set-top box for presentation via that set-top box, selectively, wherein the set-top box is indicated by the set-top box identifier that the server associates with the online user interface device identifier of a first user's online user interface device.
Claim 39	
39	39. The method of claim 38 further comprising, with the computer equipment, automatically selecting the first television advertisement based on the user profile information.
Claim 40	
[40A]	40. The method of claim 39 wherein (i) the step of delivering electronic user profile information derived from the online activity comprises, with the computer equipment, delivering the first user online access IP address; and
[40B]	(ii) the selection of a television advertisement is based on user profile information that is not delivered to the computer system.
Claim 41	
41	41. The method of claim 38 wherein the step of delivering electronic user profile information derived from the online activity comprises, with the computer equipment, redirecting the first user's online user interface device during the first user's accessing of an online site via the first online access IP address.
Claim 42	

Designation	Claim Language
42	42. The method of claim 38 further comprising automatically receiving a revenue amount as a result of direction of the first television advertisement.
Claim 43	
43	43. The method of claim 42 wherein the revenue amount is received in response to each instance in which revenue is generated as a result of displaying the selected television advertisement via the set-top box indicated by the set-top box identifier associated with the online user interface device identifier of the first user's online user interface device.
Claim 44	
44	44. The method of claim 1 wherein the first online access IP address and the common IP address are the same.
Claim 45	
45	45. The method of claim 1 wherein the first online access IP address and the common IP address differ.
Claim 46	
46	46. The method of claim 45 wherein the first online access IP address and the set-top box IP address are associated based on online access by the first user's online user interface device via a second online access IP address.
Claim 47	
47	47. The method of claim 46 wherein the second online access IP address and the common IP address are the same.
Claim 48	
48	48. The method of claim 45 wherein the first online access IP address and the set-top box IP address are associated based on a correlation between the common IP address and an online user interface device identifier that indicates the user's online user interface device.
Claim 49	
49	49. The method of claim 48 wherein the online user interface device identifier includes a cookie.
Claim 50	
50	50. The method of claim 48 wherein the online user interface device identifier includes a tag.
Claim 51	

Designation	Claim Language
51	51. The method of claim 1 wherein the set-top box is further indicated by a set-top box identifier that includes a device serial number or a portion thereof.
Claim 52	
52	52. The method of claim 1 wherein the set-top box is further indicated by a set-top box identifier that includes a device MAC address or a portion thereof.
Claim 53	
53	53. The method of claim 1 wherein the set-top box is further indicated by a set-top box identifier that includes a username, a pseudonym, or a confirmation number.
Claim 54	
54	54. The method of claim 1 wherein the common IP address is determined by the computer system by matching the first online access IP address with a set-top box IP address used by a uniquely identified set-top box both before and after the online activity occurs.
Claim 55	
55	55. The method of claim 1 wherein the first online access IP address and the set-top box IP address are associated before the online activity occurs.
Claim 56	
56	56. The method of claim 1 wherein the first online access IP address and the set-top box IP address are not associated until after the online activity occurs.
Claim 57	
57	57. The method of claim 1 further comprising, with the computer system, automatically deriving the user profile information from the online activity performed from the first online access IP address.
Claim 58	
58	58. The method of claim 1 further comprising, with the computer system, automatically selecting the first television advertisement based on the user profile information.
Claim 59	
[59A]	59. The method of claim 1 wherein: (i) the computer system is under control of an entity that operates independently of a provider of television service to

Designation	Claim Language
	each of the multitude of users through the corresponding set-top box; and
[59B]	(ii) the computer system causes the first television advertisement to be directed in part (b) without transmitting user online behavioral profile information to the provider of television service.
Claim 60	
60	60. The method of claim 59 wherein the online access and set-top box IP addresses are associated in part (a), and the first television advertisement is caused to be directed in part (b), without receiving personally identifiable information from the provider of television service.
Claim 61	
[61pre]	61. A method implemented using a programmed hardware computer system, the method comprising:
[61A]	(a) for each of a multitude of users, with the computer system, electronically associating an online user interface device identifier, which indicates an online user interface device of the user, and a set-top box identifier, which indicates a set-top box of that user, which electronic association is based on a common IP address, wherein network traffic is routed via the common IP address to both the online user interface device and the set-top box of that user; and
[61B]	(b) using user profile information derived from online activity from the online user interface device of a first user of the multitude of users via a first online access IP address, with the computer system automatically causing a first television advertisement to be directed to a set-top box for presentation via that set-top box, selectively, wherein the set-top box is indicated by the set-top box identifier associated with the online user interface device identifier of the first user's online user interface device.
Claim 62	
62	62. The method of claim 61 wherein the first online access IP address and the common IP address are the same.
Claim 63	

Designation	Claim Language
63	63. The method of claim 61 wherein the first online access IP address and the common IP address differ.
Claim 64	
64	64. The method of claim 63 wherein the online user interface device identifier and the set-top box identifier are associated based on online access by the first user's online user interface device via a second online access IP address.
Claim 65	
65	65. The method of claim 64 wherein the second online access IP address and the common IP address are the same.
Claim 66	
66	66. The method of claim 61 wherein the online user interface device identifier includes a cookie.
Claim 67	
67	67. The method of claim 61 wherein the set-top box identifier includes a device serial number or a portion thereof.
Claim 68	
68	68. The method of claim 61 wherein the set-top box identifier includes a device MAC address or a portion thereof.
Claim 69	
69	69. The method of claim 61 wherein the set-top box identifier includes a username, a pseudonym, or a confirmation number.
Claim 70	
70	70. The method of claim 61 wherein the online user interface device identifier includes a tag.
Claim 71	
71	71. The method of claim 61 wherein the online user interface device identifier includes the first online access IP address.
Claim 72	
72	72. The method of claim 61 wherein the set-top box identifier includes the common IP address.
Claim 73	
73	73. The method of claim 61 wherein the set-top box identifier includes at least a portion of the common IP address.
Claim 74	
74	74. The method of claim 61 wherein the set-top box identifier includes a set-top box IP address.

Designation	Claim Language
Claim 75	
75	75. The method of claim 61 wherein the common IP address is determined by matching the first online access IP address with a set-top box IP address used by a uniquely identified set-top box both before and after the online activity occurs.
Claim 76	
76	76. The method of claim 61 wherein the online user interface device identifier and the set-top box identifier are associated before the online activity occurs.
Claim 77	
77	77. The method of claim 61 wherein the online user interface device identifier and the set-top box identifier are not associated until after the online activity occurs.
Claim 78	
78	78. The method of claim 61 further comprising, with the computer system, automatically deriving the user profile information from the online activity performed from the first online access IP address.
Claim 79	
79	79. The method of claim 61 further comprising automatically selecting the first television advertisement based on the user profile information.
Claim 80	
80	80. The method of claim 61 wherein neither the user profile information in part (b) nor the association between the online user interface device identifier and the set-top box identifier includes personally identifiable information.
Claim 81	
[81A]	81. The method of claim 61 wherein: (i) the computer system is controlled by an entity that operates independently of a provider of television service to each of the multitude of users through the corresponding set-top box; and
[81B]	(ii) the computer system causes the first television advertisement to be directed in part (b) without transmitting user online behavioral profile information to the provider of television service.
Claim 82	

Designation	Claim Language
82	82. The method of claim 81 wherein the online user interface device identifier and the set-top box identifier are associated in part (a), and the first television advertisement is caused to be directed in part (b), without receiving personally identifiable information from the provider of television service.
Claim 83	
[83A]	83. The method of claim 61: (i) further comprising, using user profile information derived from online activity from the online user interface device of a second user of the multitude of users via a second online access IP address, with the computer system, automatically causing a second television advertisement to be directed to a second set-top box for presentation via that set-top box, selectively, wherein the second set-top box is indicated by the set-top box identifier associated with the online user interface device identifier of the second user's online user interface device, and
[83B]	(ii) wherein which television advertisement is directed to or presented via which set-top box depends on differences between the online activities from the online user interface devices of the first and second users, respectively.
Claim 84	
84	84. The method of claim 83 wherein neither the user profile information in part (i) nor the association between the second online user interface device identifier and its associated set-top box identifier includes personally identifiable information.
Claim 85	
85	85. The method of claim 61 wherein the online activity comprises requesting a search.
Claim 86	
86	86. The method of claim 61 wherein the first television advertisement is caused to be directed to the set-top box upon first being contacted by the set-top box after the user profile information is derived.
Claim 87	

Designation	Claim Language
87	87. The method of claim 61 wherein the first television advertisement is selected from among a plurality of possible television advertisements based at least in part on the user profile information derived from the online activity from the first online access IP address.
Claim 88	
88	88. The method of claim 87 wherein the first television advertisement is selected based at least partly on demographic or behavioral attributes included in the user profile information.
Claim 89	
89	89. The method of claim 61 wherein the first television advertisement is selected from among a plurality of possible television advertisements based at least in part on the television content viewed at the time the first television advertisement is to be presented by the set-top box.
Claim 90	
90	90. The method of claim 61 wherein the common IP address is an IP address dynamically assigned to a modem or router used by the user for online access and connected to the user's set-top box.
Claim 91	
[91A]	91. The method of claim 61 further comprising the computer system: (i) receiving an identifier corresponding to the set-top box of the user; and
[91B]	(ii) causing the television advertisement to be transmitted only if directed to the set-top box corresponding to the identifier.
Claim 92	
92	92. The method of claim 61 wherein part (a) comprises the act of storing the common IP address, and further comprising updating the common IP address of the user.
Claim 93	
93	93. The method of claim 92 wherein part (a) comprises the act of storing the common IP address in the computer system, and further comprising periodically updating the common IP address of the user.

Designation	Claim Language
Claim 94	
[94A]	94. The method of claim 61 wherein: (i) the user profile information in part (b) includes a list of online access IP addresses corresponding to specific online activities and times and dates corresponding to each of the online activities; and
[94B]	(ii) the computer system causes the television advertisement to be directed to the set-top box of one of the users only if any of the listed online access IP addresses corresponding to the specific online activities and the corresponding dates and times of the online activities match the common IP address assigned to that user and the date and time corresponding thereto.
Claim 95	
95	95. The method of claim 94 wherein part (a) comprises the act of storing in the computer system the common IP address and dates and times corresponding thereto, and further comprising periodically updating (i) the common IP address and times and dates corresponding thereto or (ii) the list of online access IP addresses corresponding to specific online activities and time and dates corresponding to each of the online activities.
Claim 96	
96	96. The method of claim 61 wherein the computer system is a central ad server and the first television advertisement is received at the central ad server and directed to the set-top box.
Claim 97	
97	97. The method of claim 61 wherein part (b) comprises, with the computer system, directing instructions to a profile provider, to an online site, or to an independent ad server to direct the first television advertisement to the set-top box.
Claim 98	
98	98. The method of claim 61 wherein part (b) comprises, with the computer system, directing instructions to the set-top box to retrieve the first television advertisement from a profile provider, from an online site, or from an independent ad server.

Designation	Claim Language
Claim 99	
99	99. The method of claim 61 wherein the computer system causes the first television advertisement to be directed only in response to a request for advertisements originating from the user's set-top box.
Claim 100	
100	100. The method of claim 61 wherein the computer system causes the first television advertisement to be directed without a request for advertisements originating from the user's set-top box.
Claim 101	
101	101. The method of claim 61 wherein the online access IP address of each user is an IP address associated with a modem or router used by that user for online access.
Claim 102	
102	102. The method of claim 61 wherein only advertisements satisfying criteria selected by each user are directed to the set-top box of that user.
Claim 103	
103	103. The method of claim 61 further comprising receiving a revenue amount as a result of directing the advertisement.
Claim 104	
104	104. The method of claim 61 further comprising paying a revenue amount to a profile provider as a result of using the user profile information in part (b).
Claim 105	
105	105. The method of claim 26 wherein automatically electronically delivering comprises, with the computer equipment, redirecting the user's online user interface device to a server of the computer system.
Claim 106	
106	106. The method of claim 26 wherein the first online access IP address and the common IP address are the same.
Claim 107	
107	107. The method of claim 26 wherein the first online access IP address and the common IP address differ.
Claim 108	

Designation	Claim Language
108	108. The method of claim 107 wherein the first online access IP address and the set-top box IP address are associated based on online access by the user's online user interface device via a second online access IP address.
Claim 109	
109	109. The method of claim 108 wherein the second online access IP address and the common IP address are the same.
Claim 110	
110	110. The method of claim 107 wherein the first online access IP address and the set-top box IP address are associated based on a correlation between the common IP address and an online user interface device identifier that indicates the user's online user interface device.
Claim 111	
111	111. The method of claim 110 wherein the online user interface device identifier includes a cookie.
Claim 112	
112	112. The method of claim 110 wherein the online user interface device identifier includes a tag.
Claim 113	
113	113. The method of claim 110 wherein the set-top box is further indicated by a set-top box identifier that includes a device serial number or a portion thereof.
Claim 114	
114	114. The method of claim 110 wherein the set-top box is further indicated by a set-top box identifier that includes a device MAC address or a portion thereof.
Claim 115	
115	115. The method of claim 110 wherein the set-top box is further indicated by a set-top box identifier that includes a username, a pseudonym, or a confirmation number.
Claim 116	
116	116. The method of claim 26 wherein the common IP address is determined by matching the first online access IP address with a set-top box IP address used by a uniquely identified set-top box both before and after the online activity occurs.
Claim 117	

Designation	Claim Language
117	117. The method of claim 26 wherein the first online access IP address and the set-top box IP address are associated before the online activity occurs.
Claim 118	
118	118. The method of claim 26 wherein the first online access IP address and the set-top box IP address are not associated until after the online activity occurs.
Claim 119	
119	119. The method of claim 26 further comprising, with the computer equipment, automatically deriving the user profile information from the online activity from the first online access IP address.
Claim 120	
120	120. The method of claim 31 wherein the first television advertisement is selected based at least partly on a specific search request, which request has originated from the first online user interface device.
Claim 121	
121	121. The method of claim 34 wherein the revenue amount is received from an advertiser that has contracted to display a TV ad to persons who have characteristics contained in the user profile information.
Claim 122	
122	122. The method of claim 121 further comprising, with the computer equipment, automatically selecting the first television advertisement based on the user profile information.
Claim 123	
[123A]	123. The method of claim 26 wherein: (i) the computer equipment is controlled by an entity that operates independently of a provider of television service to each of the multitude of users through the corresponding set-top box; and
[123B]	(ii) the computer equipment causes the first television advertisement to be directed in part (d) without transmitting or causing to be transmitted user online behavioral profile information to the provider of television service.
Claim 124	

Designation	Claim Language
124	124. The method of claim 123 wherein the online access and set-top box IP addresses are associated in part (a), and the first television advertisement is caused to be directed in part (d), without receiving personally identifiable information from the provider of television service.
Claim 125	
125	125. The method of claim 28 wherein neither the user profile information delivered in part (a) nor the association between the second online access IP address and its associated set-top box IP address includes personally identifiable information.
Claim 126	
126	126. The method of claim 39 wherein the user profile information derived from the online activity comprises an indication of a search request originating from the online user interface device of the first user.
Claim 127	
127	127. The method of claim 38 wherein automatically electronically delivering comprises, with the computer equipment, redirecting the user's online user interface device to the computer system.
Claim 128	
128	128. The method of claim 38 wherein the first online access IP address and the common IP address are the same.
Claim 129	
129	129. The method of claim 38 wherein the first online access IP address and the common IP address differ.
Claim 130	
130	130. The method of claim 129 wherein the online user interface device identifier and the set-top box identifier are associated based on online access by the user's online user interface device via a second online access IP address.
Claim 131	
131	131. The method of claim 130 wherein the second online access IP address and the common IP address are the same.
Claim 132	
132	132. The method of claim 38 wherein the online user interface device identifier includes a cookie.
Claim 133	

Designation	Claim Language
133	133. The method of claim 38 wherein the set-top box identifier includes a device serial number or a portion thereof.
Claim 134	
134	134. The method of claim 38 wherein the set-top box identifier includes a device MAC address or a portion thereof.
Claim 135	
135	135. The method of claim 38 wherein the set-top box identifier includes a username, a pseudonym, or a confirmation number.
Claim 136	
136	136. The method of claim 38 wherein the online user interface device identifier includes a tag.
Claim 137	
137	137. The method of claim 38 wherein the online user interface device identifier includes the first online access IP address.
Claim 138	
138	138. The method of claim 38 wherein the set-top box identifier includes the common IP address.
Claim 139	
139	139. The method of claim 38 wherein the set-top box identifier includes at least a portion of the common IP address.
Claim 140	
140	140. The method of claim 38 wherein the set-top box identifier includes a set-top box IP address.
Claim 141	
141	141. The method of claim 38 wherein the common IP address is determined by matching the first online access IP address with a set-top box IP address used by a uniquely identified set-top box both before and after the online activity occurs.
Claim 142	
142	142. The method of claim 38 wherein the online user interface device identifier and the set-top box identifier are associated before the online activity occurs.
Claim 143	

Designation	Claim Language
143	143. The method of claim 38 wherein the online user interface device identifier and the set-top box identifier are not associated until after the online activity occurs.
Claim 144	
144	144. The method of claim 38 further comprising, with the computer equipment, automatically deriving the user profile information from the online activity performed from the first online access IP address.
Claim 145	
145	145. The method of claim 39 wherein the user profile information derived from the online activity comprises demographic attributes collected through an Internet site accessed with the online user interface device of the first user.
Claim 146	
146	146. The method of claim 42 wherein the revenue amount is received from an advertiser that has contracted to display a TV ad to an audience of an Internet site.
Claim 147	
147	147. The method of claim 42 further comprising, with the computer equipment, automatically selecting the first television advertisement based on the user profile information.
Claim 148	
148	148. The method of claim 38 wherein neither the user profile information delivered in part (a) nor the association between the online user interface device identifier and the set-top box identifier includes personally identifiable information.
Claim 149	
[149A]	149. The method of claim 38 wherein: (i) the computer equipment is controlled by an entity that operates independently of a provider of television service to each of the multitude of users through the corresponding set-top box; and
[149B]	(ii) the first television advertisement is directed in part (d) without transmitting user online behavioral profile information to the provider of television service.
Claim 150	

Designation	Claim Language
150	150. The method of claim 149 wherein the online user interface device identifier and the set-top box identifier are associated in part (a), and the first television advertisement can be directed in part (d), without receiving personally identifiable information from the provider of television service.
Claim 151	
[151A]	151. The method of claim 38: (e) wherein delivered user profile information of a second user of the multitude of users (i) is derived from online activity of the second user from the second user's online user interface device via a second online access IP address and (ii) includes identification of the second online access IP address and the time and date of the online activity,
[151B]	(f) as a result of which delivery, a second television advertisement, different from the first television advertisement, is directed to a second set-top box for presentation via that set-top box, selectively, wherein the second set-top box is indicated by the set-top box identifier that the server associates with the second online user interface device identifier of the second user's online user interface device, for selective presentation via that set-top box, and
[151C]	(g) wherein which television advertisement is directed to or presented via which set-top box depends on differences between the online activities from the first and second online user interface devices, respectively.
Claim 152	
152	152. The method of claim 151 wherein neither the user profile information delivered in part (a) nor the association between the second online user interface device identifier and its associated set-top box identifier includes personally identifiable information.