US007861260B2

(12) **United States Patent**
Shkedi

(10) **Patent No.: US 7,861,260 B2**
(45) **Date of Patent: Dec. 28, 2010**

(54) **TARGETED TELEVISION ADVERTISEMENTS BASED ON ONLINE BEHAVIOR**

(75) Inventor: **Roy Shkedi**, New York, NY (US)

(73) Assignee: **Almondnet, Inc.**, New York, NY (US)

(*) Notice: Subject to any disclaimer, the term of this patent is extended or adjusted under 35 U.S.C. 154(b) by 555 days.

(21) Appl. No.: **11/736,544**

(22) Filed: **Apr. 17, 2007**

(65) **Prior Publication Data**

US 2008/0259906 A1 Oct. 23, 2008

(51) **Int. Cl.**
H04N 7/10 (2006.01)
H04N 7/025 (2006.01)

(52) **U.S. Cl.** **725/34**; 725/36; 709/218; 705/14; 705/14.49; 705/14.53; 705/14.54; 705/14.66

(58) **Field of Classification Search** 725/34–36; 709/218; 705/14, 14.25, 14.4, 14.41, 14.49, 705/14.53, 14.54, 14.55, 14.66, 14.73
See application file for complete search history.

(56) **References Cited**

U.S. PATENT DOCUMENTS

5,105,184	A	4/1992	Pirani et al.
5,809,242	A	9/1998	Shaw et al.
5,848,396	A	12/1998	Gerace
5,855,008	A	12/1998	Goldhaber et al.
5,933,811	A	8/1999	Angles et al.
5,948,061	A	9/1999	Merriman et al.
5,978,013	A	11/1999	Jones et al.
6,026,368	A	2/2000	Brown et al.
6,055,573	A	4/2000	Gardenswartz et al.
6,073,241	A	6/2000	Rosenberg et al.
6,157,946	A	12/2000	Itakura et al.
6,160,989	A	12/2000	Hendricks et al.
6,189,008	B1	2/2001	Easty et al.
6,216,129	B1	4/2001	Eldering
6,366,298	B1	4/2002	Haitsuka et al.

(Continued)

FOREIGN PATENT DOCUMENTS

JP	2007-274246	10/2007

(Continued)

OTHER PUBLICATIONS

Luening E.; "Free ISP NetZero beefs up ad services"; web page at http://www.news.com/Free-ISP-NetZero-beefs-up-ad-services/2100-1023_3-241067.html; Jan. 2, 2002.

(Continued)

Primary Examiner—Brian T Pendleton
Assistant Examiner—Nnenna N Ekpo
(74) *Attorney, Agent, or Firm*—Louis J. Hoffman; David S. Alavi

(57) **ABSTRACT**

In a method for delivering targeted television advertisements based on online behavior, IP addresses indicating online access devices and IP addresses indicating television set-top boxes are electronically associated for a multitude of users. Using user profile information derived from online activity from one of the online access IP addresses, a television advertisement is selected, such as by using behavioral targeting or demographic information, and automatically directed to the set-top box indicated by the set-top IP address associated with that online access IP address. Preferably neither the user profile information nor the electronic association of online access and set-top box IP addresses includes personally identifiable information.

152 Claims, 18 Drawing Sheets

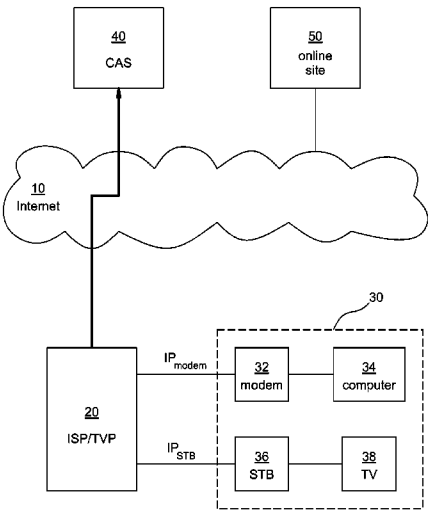

FreeWheel, Ex. 1101

U.S. PATENT DOCUMENTS

6,385,592	B1	5/2002	Angles et al.	
6,446,261	B1	9/2002	Rosser	
6,463,533	B1 *	10/2002	Calamera et al.	713/163
6,490,587	B2	12/2002	Easty et al.	
6,718,551	B1	4/2004	Swix et al.	
6,771,290	B1	8/2004	Hoyle	
6,832,207	B1	12/2004	Shkedi	
6,845,396	B1	1/2005	Kanojia	
6,847,992	B1	1/2005	Haitsuka et al.	
6,925,440	B1	8/2005	Shkedi	
6,973,436	B1	12/2005	Shkedi	
7,013,290	B2	3/2006	Ananian	
7,051,351	B2	5/2006	Goldman et al.	
7,072,853	B2	7/2006	Shkedi	
7,092,926	B2	8/2006	Cerrato	
7,100,183	B2	8/2006	Kunkel et al.	
7,152,237	B2	12/2006	Flickinger et al.	
7,188,085	B2	3/2007	Pelletier	
7,260,823	B2	8/2007	Schlack et al.	
2002/0013943	A1	1/2002	Haberman et al.	
2002/0032603	A1	3/2002	Yeiser	
2002/0059602	A1	5/2002	Macrae et al.	
2002/0078444	A1	6/2002	Krewin et al.	
2002/0082910	A1	6/2002	Kontogouris	
2002/0104086	A1	8/2002	Tomsen et al.	
2002/0120933	A1	8/2002	Knudson et al.	
2002/0120935	A1	8/2002	Huber et al.	
2002/0123928	A1	9/2002	Eldering et al.	
2002/0124249	A1	9/2002	Shintani	
2002/0124253	A1	9/2002	Eyer et al.	
2002/0129368	A1	9/2002	Schlack et al.	
2002/0194058	A1	12/2002	Eldering	
2002/0194604	A1	12/2002	Sanchez et al.	
2003/0051242	A1	3/2003	Donnelly	
2003/0066078	A1	4/2003	Bjorgan et al.	
2003/0126597	A1	7/2003	Darby et al.	
2003/0135853	A1	7/2003	Goldman et al.	
2003/0145323	A1	7/2003	Hendricks et al.	
2003/0149975	A1	8/2003	Eldering et al.	
2003/0187949	A1 *	10/2003	Bhatt et al.	709/218
2003/0208756	A1	11/2003	Macrae et al.	
2003/0208758	A1	11/2003	Schein et al.	
2003/0226141	A1	12/2003	Krasnow et al.	
2004/0003406	A1	1/2004	Billmaier	
2004/0010546	A1	1/2004	Klug et al.	
2004/0073915	A1	4/2004	Dureau	
2004/0078809	A1	4/2004	Drazin	
2004/0107437	A1	6/2004	Reichardt et al.	
2004/0117827	A1	6/2004	Karaoguz et al.	
2004/0123314	A1	6/2004	Bova	
2004/0163101	A1	8/2004	Swix et al.	
2004/0172650	A1	9/2004	Hawkins et al.	
2005/0076393	A1	4/2005	Sussman	
2005/0086112	A1	4/2005	Shkedi	
2005/0165638	A1	7/2005	Piller	
2005/0165644	A1	7/2005	Beyda et al.	
2005/0177420	A1	8/2005	Tanahashi	
2006/0116924	A1	6/2006	Angles et al.	
2006/0253323	A1	11/2006	Phan et al.	
2006/0271953	A1	11/2006	Jacoby et al.	
2007/0100690	A1	5/2007	Hopkins	
2007/0233571	A1	10/2007	Eldering et al.	
2007/0244750	A1	10/2007	Grannan et al.	
2007/0266403	A1	11/2007	Ou et al.	
2007/0294721	A1 *	12/2007	Haeuser et al.	725/34
2008/0016540	A1	1/2008	Savoor et al.	
2008/0040742	A1	2/2008	Howcroft et al.	
2008/0243822	A1	10/2008	Campbell et al.	
2008/0313194	A1	12/2008	Shkedi	
2009/0049468	A1	2/2009	Shkedi	
2009/0094119	A1	4/2009	Shkedi	
2009/0172723	A1	7/2009	Shkedi et al.	
2009/0300675	A1	12/2009	Shkedi	

FOREIGN PATENT DOCUMENTS

KR	10-0793513	1/2008
WO	WO2005046237	5/2005

OTHER PUBLICATIONS

Bergstein B.; "Ad-targeted System Monitors Your Interests with ISP's Help"; from website www.siliconvalley.com, Dec. 10,2007.
White B.; "Watching What You See on the Web"; Wall Street Journal Online; Dec. 6, 2007.
"What's New: The Latest On Technology Deals"; from Dow Jones VentureWire; as published on Wall Street Journal Online; Oct. 22, 2007.
"DoubleClick Launches New Marketing Solutions"; from website www.clickz.com; Oct. 6, 1998.
Engage Technologies, Inc.; Form S-1A; filed with the SEC; pp. 36-50; Jul. 19, 1999.
Chen, Andy; "Behavioral Matchmaking, Part 3: GPS and Behavioral Targeting"; from website http://www.clickz.com; Nov. 24, 2004.
Battelle, John; "The Search—How Google and Its Rivals Rewrote the Rules of Business and Transformed Our Culture"; pp. 167-171; 2005.
"BSkyB in Google Link-up"; Financial Times (FT.com); Dec. 6, 2006.
"Google moves into TV ads with BSkyB Deal"; Guardian Unlimited; Dec. 7, 2006.
Chen, Andy; "The New Behavioral Wunder"; from webpage http://www.clickz.com; Apr. 11, 2007.
"NetZero Launches Ad-Backed Access Service"; from website www.clickz.com; Oct. 20, 1998.
"Nissan, BellSouth, Music Blvd. Among Latest Advertisers to Sign Up With NetZero"; press release from www.irconnect.com; Nov. 16, 1998.
"LookSmart and NetZero Extend and Enhance Winning Partnership"; press release found on www.shareholder.com; Feb. 9, 2000.
"NetZero Guarantees Increase in Web Site Traffic for New Adverstisers"; press release from www.irconnect.com; circa 2000.
Saunders, Christopher; "NetZero to Launch Mobile Ad Platform"; from website www.clickz.com; Mar. 29, 2001.
"180Solutions Launches All-In-One Online Ad Solution—Metricsdirect Outperforms Conventional Cost-Per-Click Models"; from www.zango.com; Mar. 30, 2004.
Keegan, Paul; "The Man Who Can Save Advertising"; from http://money.cnn.com; Nov. 1, 2004.
"Visible World Targets Advertising Industry"; from http://informitv.com; Feb. 20, 2005.
"Venture Market Summary"; VentureWire Alert; Mar. 29, 2005.
Olsen, S.; "TiVo is in talks with Internet search giants Google and Yahoo over possible deal . . . television and the Web . . . "; www.news.com; Apr. 18, 2005.
"This Ad's for You—Just You"; BusinessWeek online; Jun. 28, 2005.
"Cable's Big Bet on Hyper-Targeting. Time Warner will test new software that sends different ads to different viewers."; BusinessWire online; Jul. 4, 2005.
"Comcast, Cox Buy Interactive TV Company"; from Yahoo.com Financial News; Jul. 13, 2005.
"TiVo Launches New Interactive Advertising Technology"; press release from www.tivo.com; Jul. 18, 2005.
Grant, Peter; "To Ward Off New Competitors, Comcast Builds a Mini Internet"; Wall Street Journal online; Oct. 13, 2005.
"TiVo Announces First Advertising Search Product for Television"; press release from www.tivo.com; Nov. 28, 2005.
"TiVo Begins Rollout of Online Services Now Accessible Directly on the TV"; press release from www.tivo.com; Dec. 1, 2005.
"Comcast, Time Warner Cable hopeful on network DVRs"; from www.reuters.com; Mar. 30, 2006.
"TiVo Launches Television's New Advertising Search Product"; press release from www.tivo.com; May 8, 2006.
TiVo and Brightcove Partner to Deliver Broadband Content to TiVo Subscribers; press release from www.tivo.com; May 10, 2006.

"TiVo Debuts New Lexus Car Configuration Application"; press release from www.tivo.com; May 11, 2006.
Newcomb, Kevin; "BMW Uses TiVo Technology to Improve Product Placement"; from www.clickz.com; Jun. 21, 2006.
Wingfield, Nick; "New TiVo Feature Lets Families Share Videos on TV Via the Web"; The Wall Street Journal Online; Nov. 14, 2006.
Kaye, Kate; "TiVo Broadens CBS Offerings, Adds Web-to-TV Services"; from www.clickz.com; Nov. 15, 2006.
Grant, Peter and Marr, Merissa; "Comcast Nears Pact With Disney To Offer ABC Shows on Demand"; The Wall Street Journal Online; Nov. 21, 2006.
"TiVo to Insert Ads At End of Probrams"; The Wall Street Journal Online; Nov. 28, 2006.
FAQ from Zango Ad Services; http://adservices.zango.com; 2007.
"NetZero and Juno's sophisticated targeting capabilities enable advertisers to hit an exact audience of qualified consumers"; from www.untd.com; 2007.
Shukla, Anuradha; "Visible World Offers 'Any Screen' Solution for Customized Video Advertising"; from www.tmcnet.com; Feb. 6, 2007.
Tam, Pui-Wing; "TiVo, Amazon to Deliver Web Video to TV Sets"; The Wall Stree Journal Online; Feb. 7, 2007.
Story, Louise; "The Web drives an advertising boom without the need for agencies"; International Herald Tribune (iht.com); Feb. 8, 2007.
Todd, Daniel; "The New World of Desktop Advertising"; DMNews.com; Mar. 28, 2007.
"Medio Systems to Launch Mobile Performance Ad Network—Search and recommendation technologies propel advancements in mobile advertising", article from Mobilestreams website, Mar. 19, 2007.
Hunt, Timothy J., "Moving Target", Financial Post, Oct. 1, 2000.

* cited by examiner

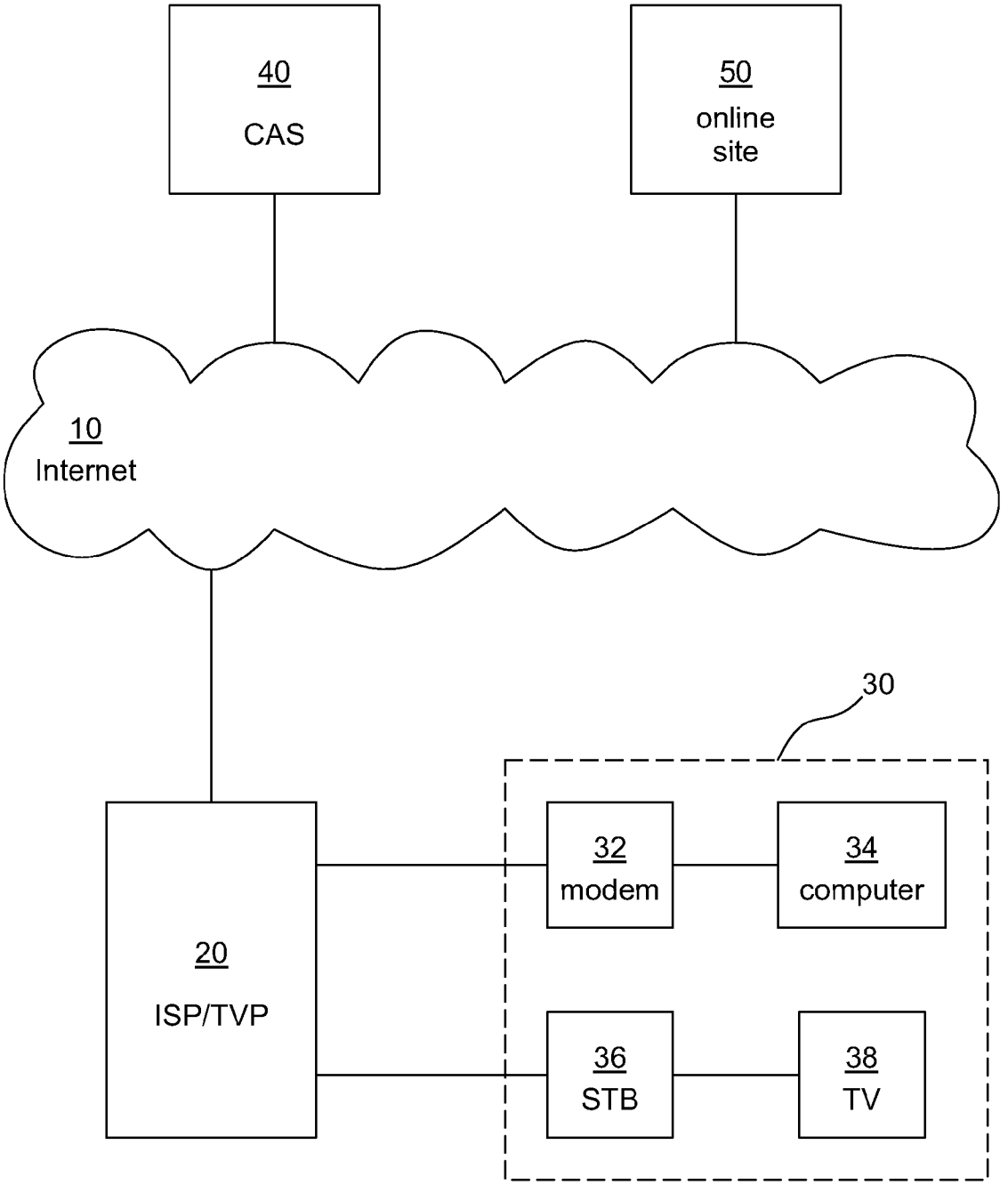
40
CAS
50
online
site
10
Internet
30
32
modem
34
computer
20
ISP/TVP
36
STB
38
TV

FIG. 1

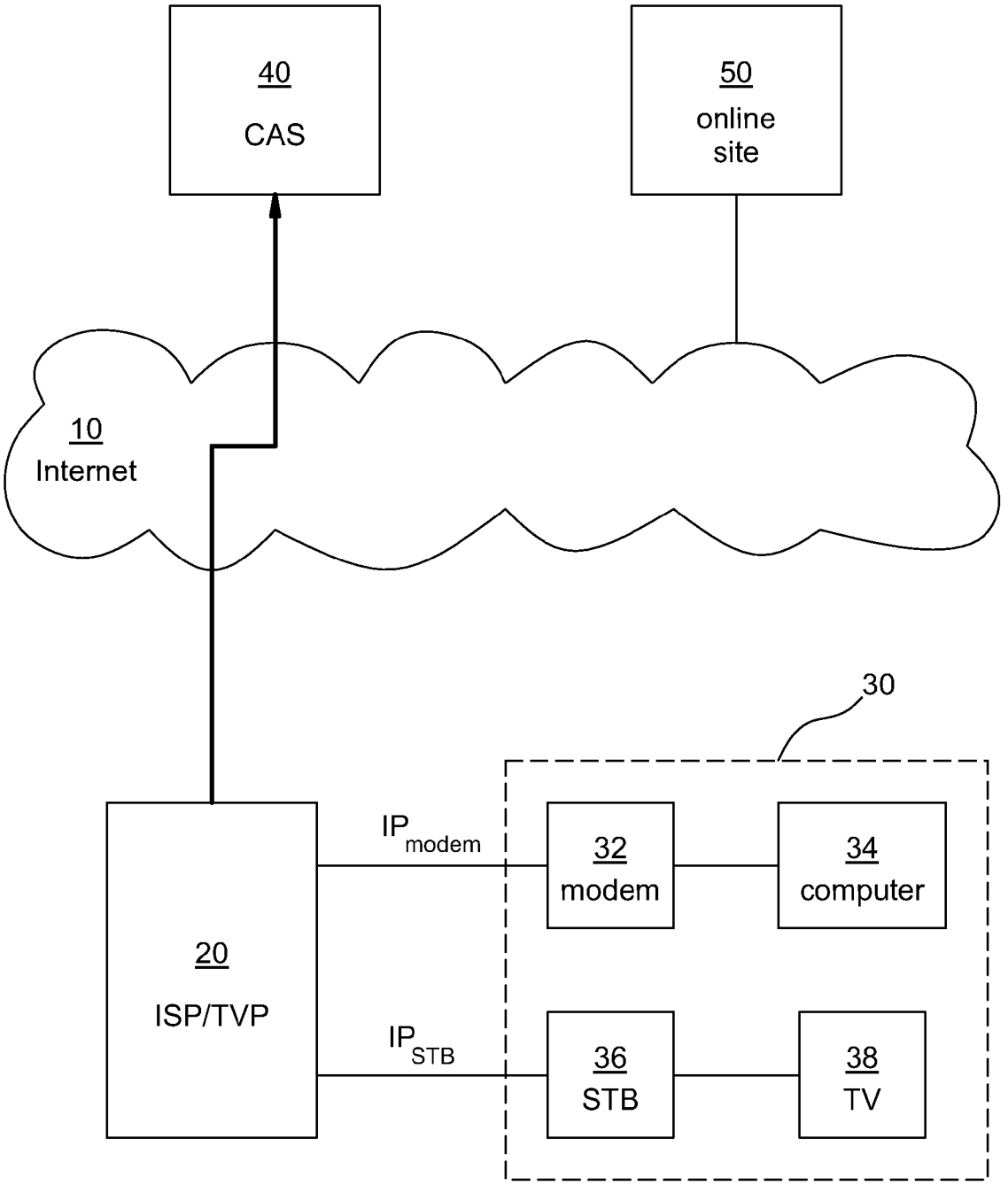
40
CAS
50
online
site
10
Internet
30
20
ISP/TVP
IP modem
IP STB
32
modem
34
computer
36
STB
38
TV

FIG. 2

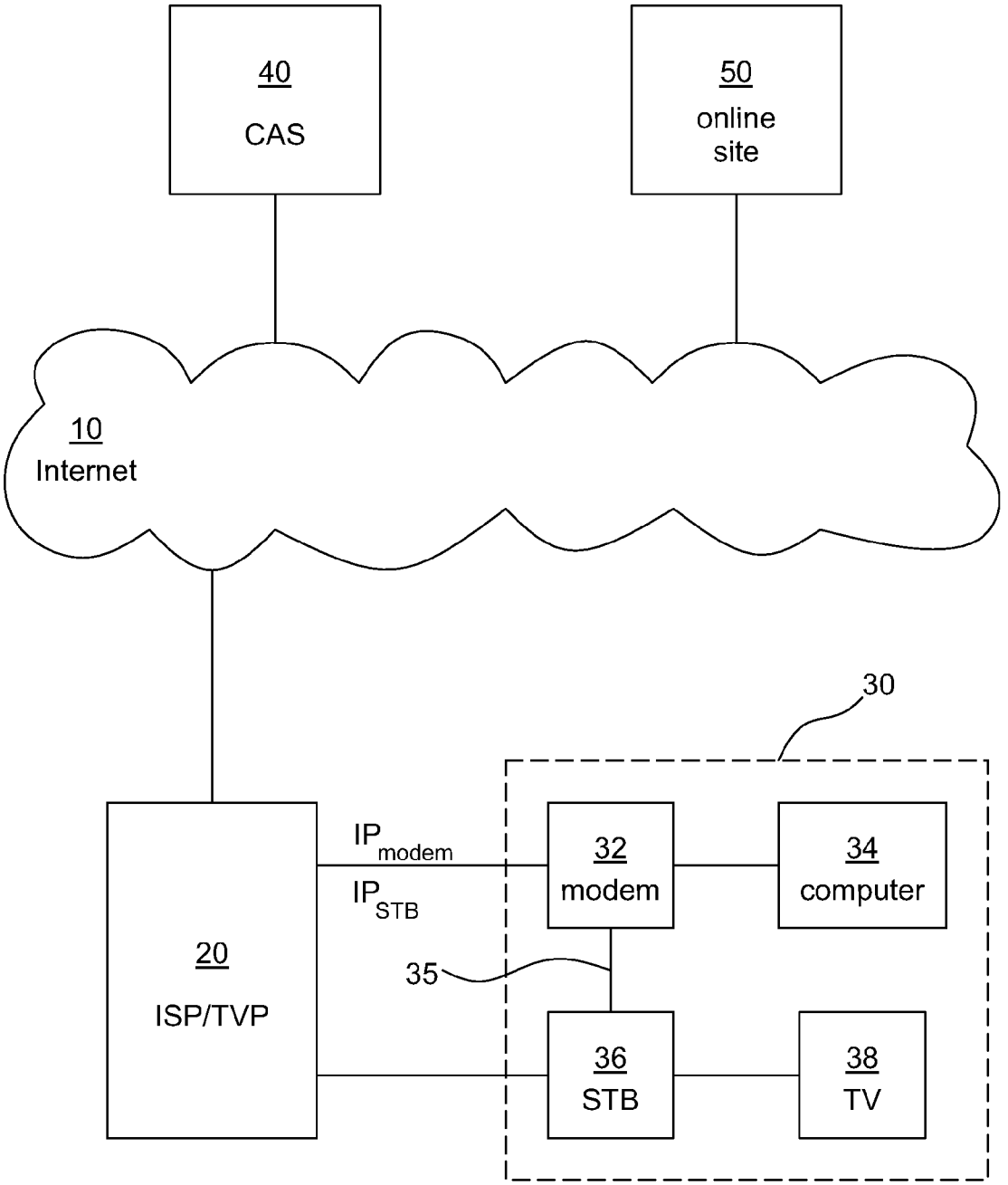
40
CAS
50
online
site
10
Internet
30
20
ISP/TVP
IP modem
IP STB
32
modem
34
computer
35
36
STB
38
TV

FIG. 3

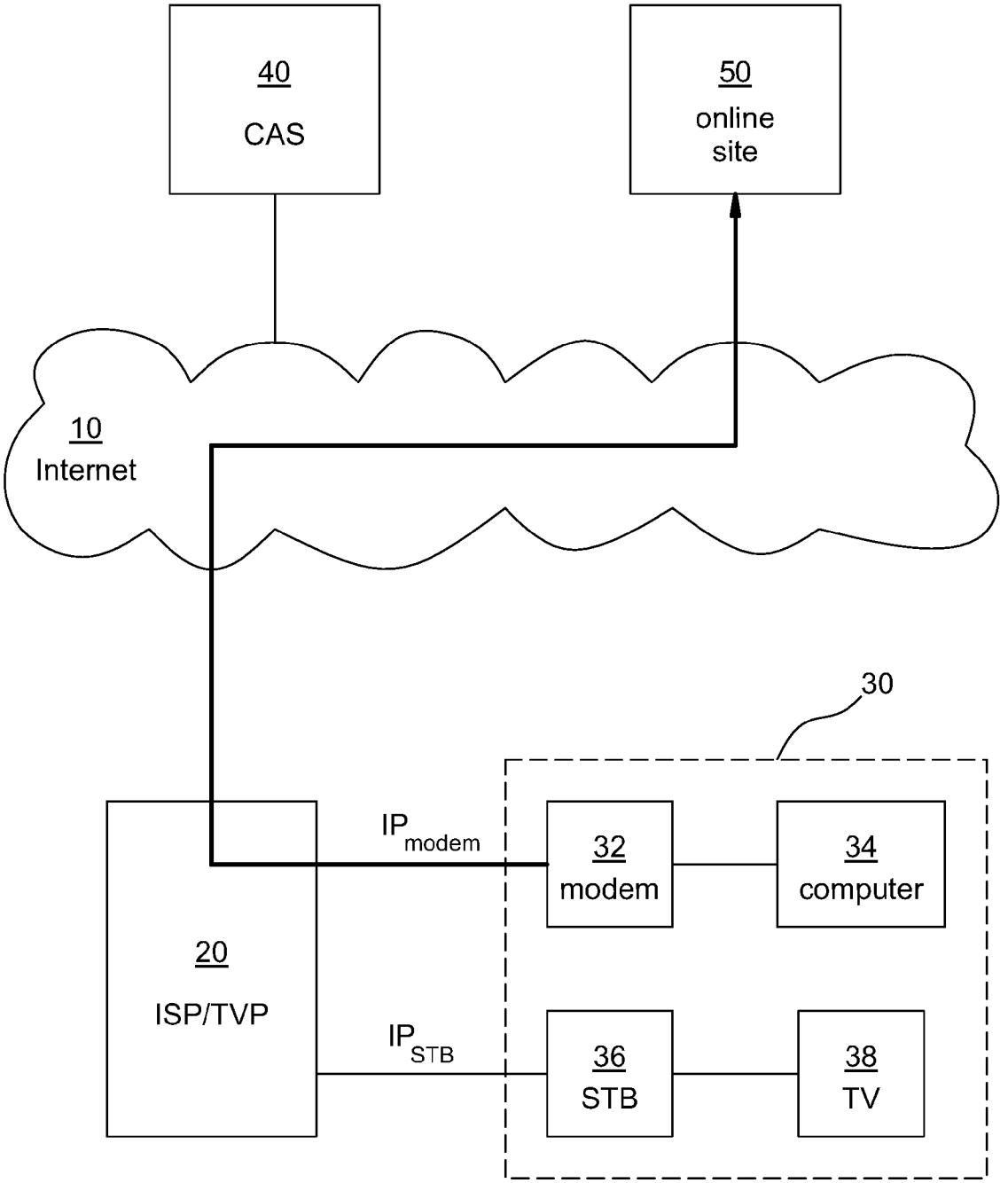
40
CAS
50
online
site
10
Internet
30
IP modem
32
modem
34
computer
20
ISP/TVP
IP STB
36
STB
38
TV

FIG. 4

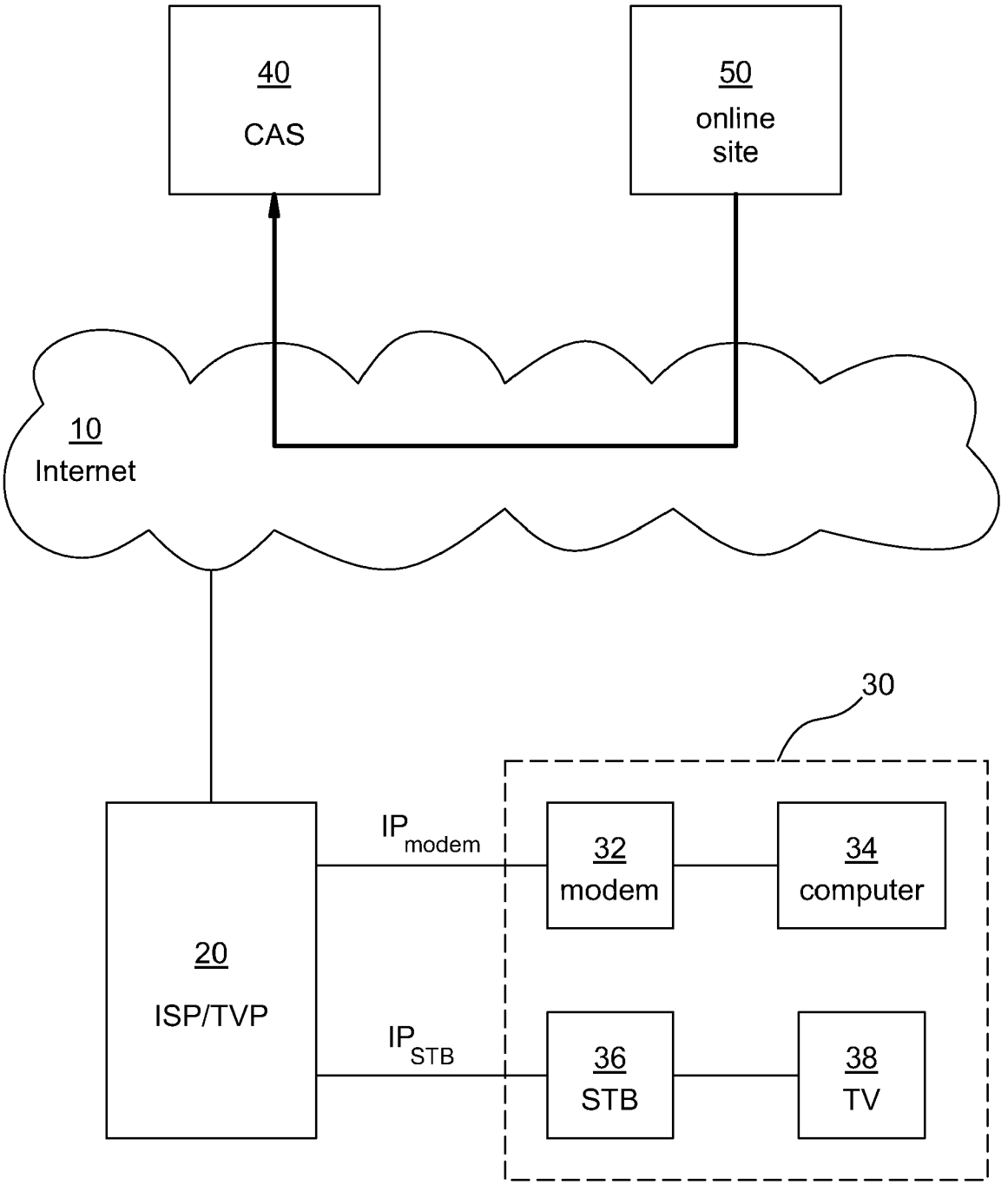
40
CAS
50
online
site
10
Internet
30
20
ISP/TVP
IP modem
IP STB
32
modem
34
computer
36
STB
38
TV

FIG. 5

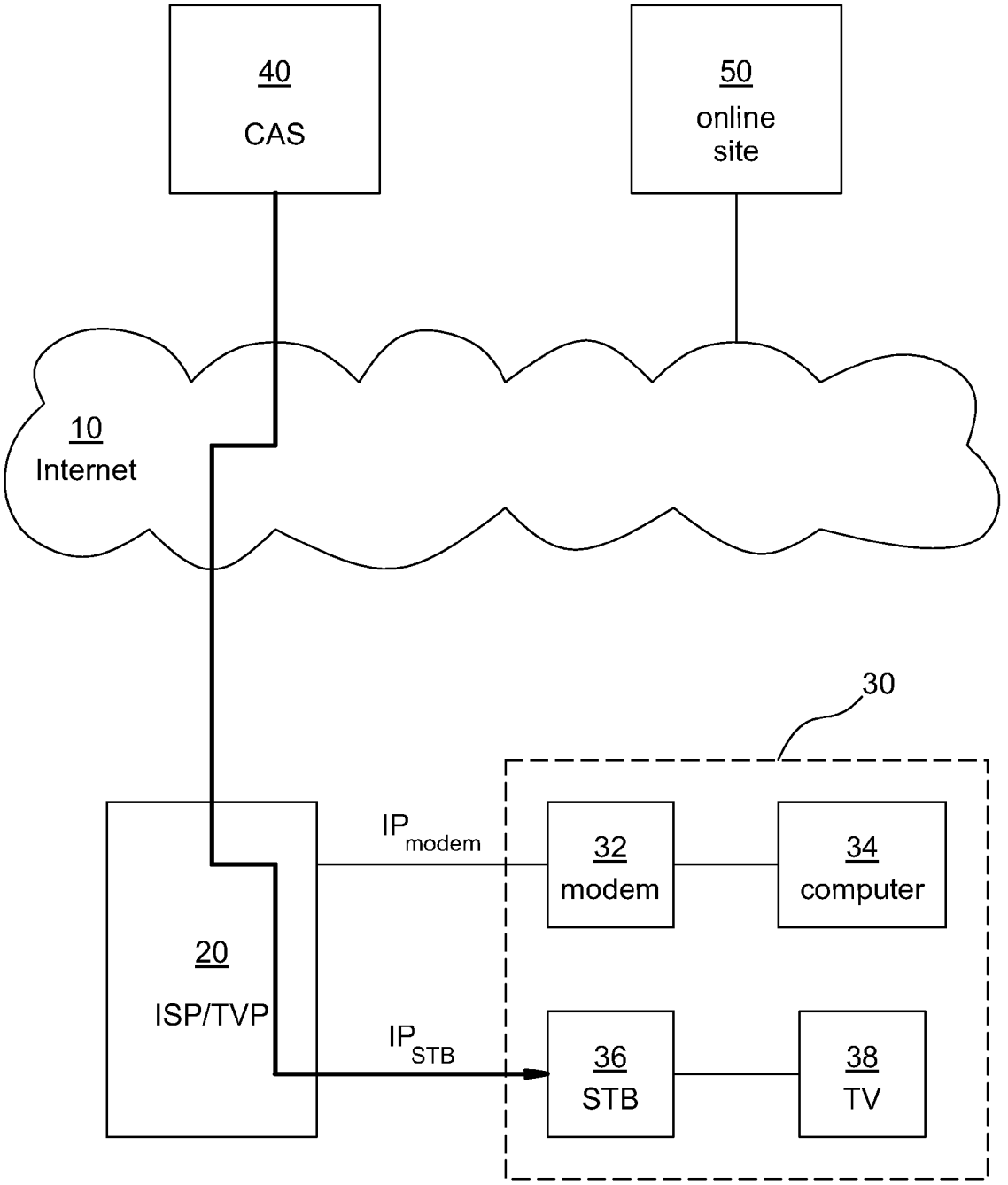
40
CAS
50
online
site
10
Internet
30
IP modem
32
modem
34
computer
20
ISP/TVP
IP STB
36
STB
38
TV

FIG. 6A

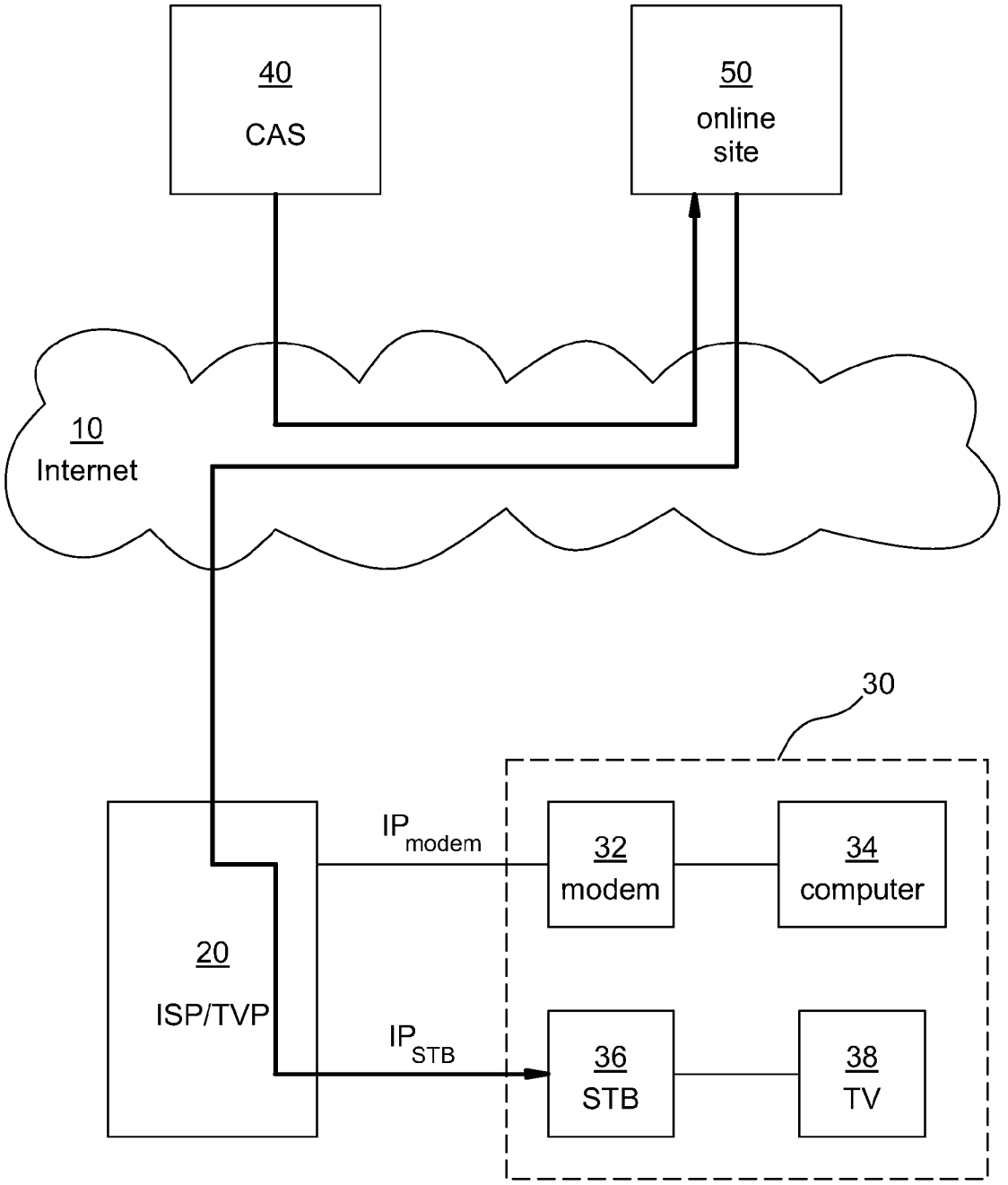
40
CAS
50
online
site
10
Internet
30
IP modem
32
modem
34
computer
20
ISP/TVP
IP STB
36
STB
38
TV

FIG. 6B

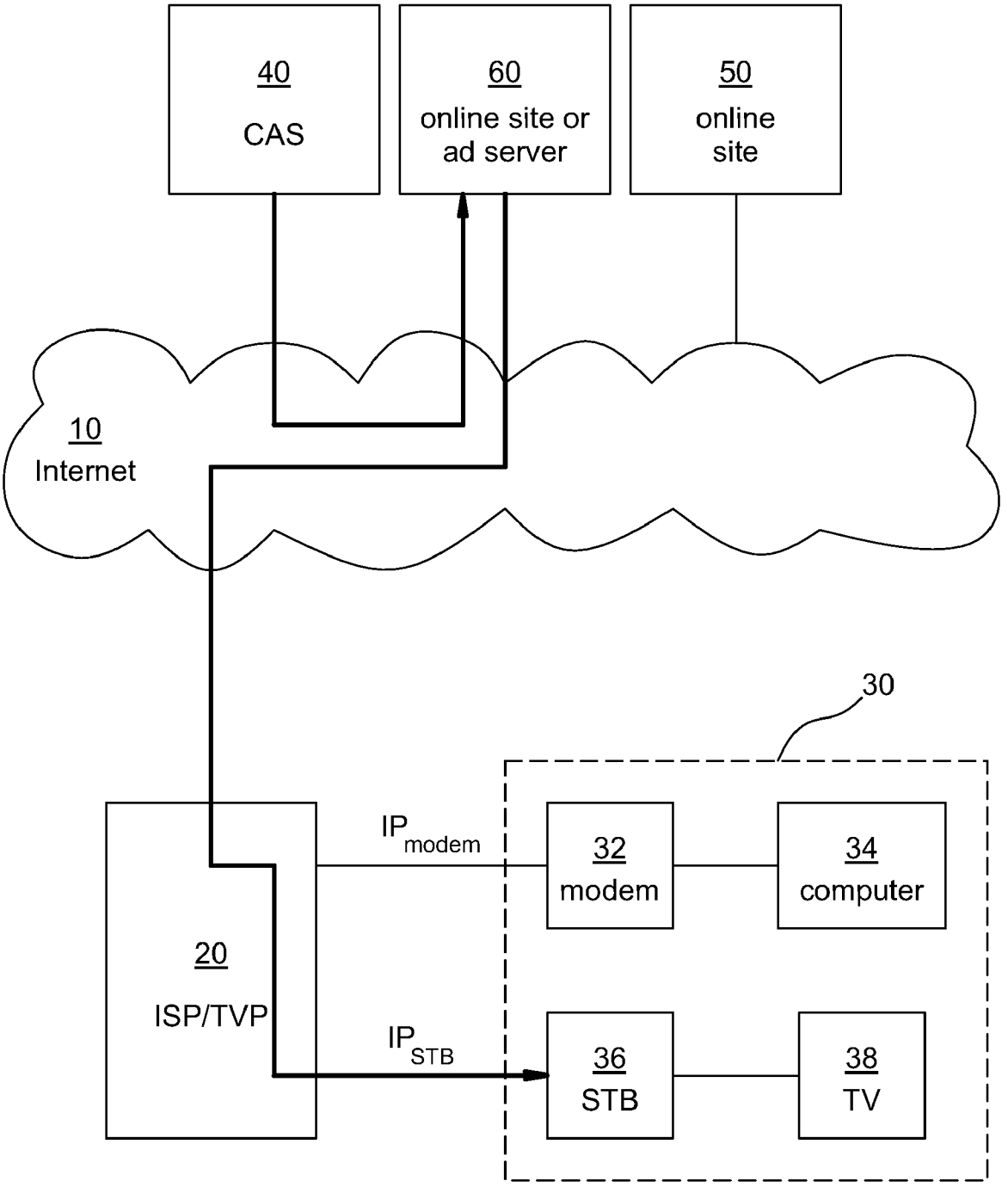
40
CAS
60
online site or
ad server
50
online
site
10
Internet
30
20
ISP/TVP
IP modem
IP STB
32
modem
34
computer
36
STB
38
TV

FIG. 6C

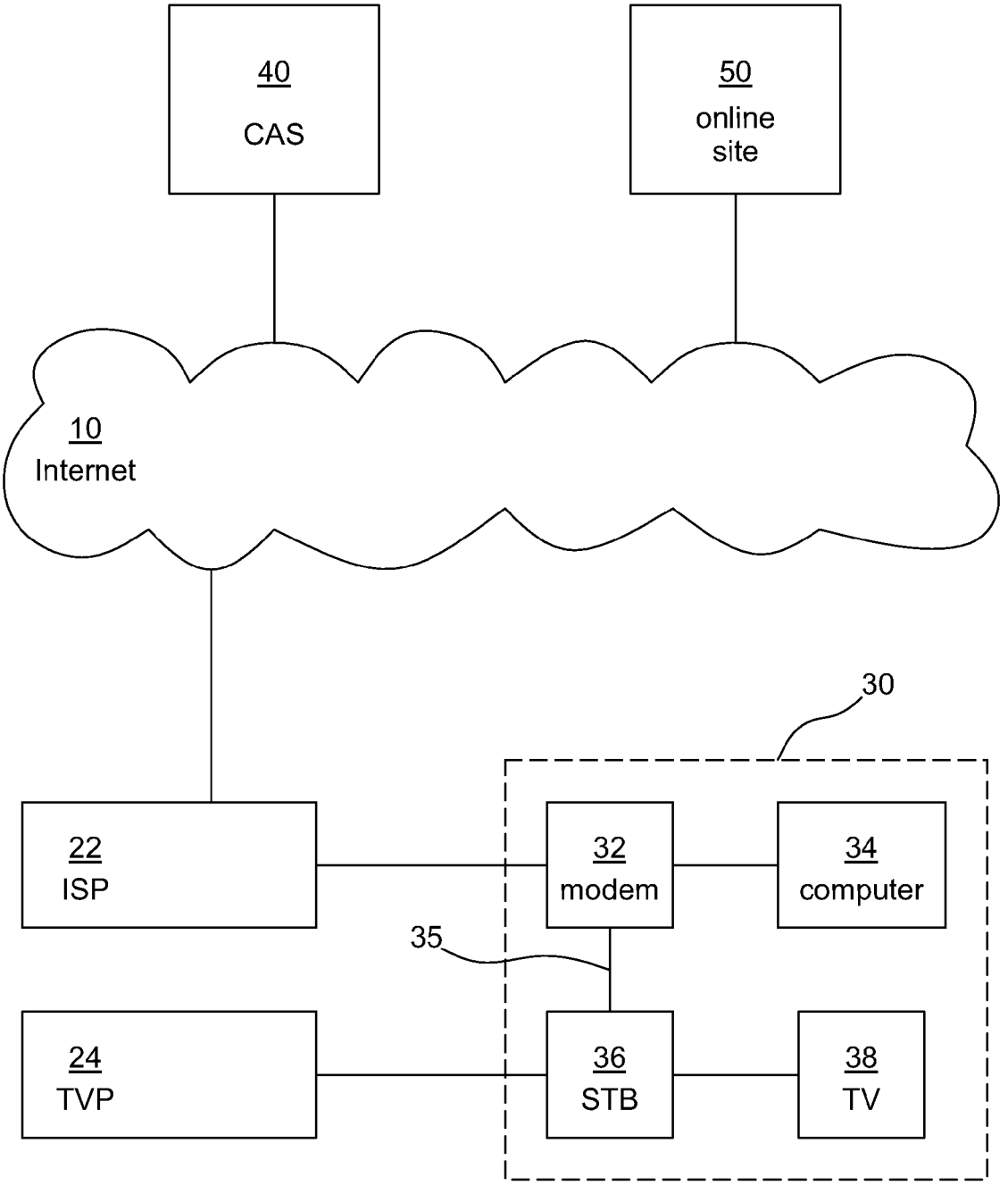
40
CAS
50
online
site
10
Internet
30
22
ISP
32
modem
34
computer
35
24
TVP
36
STB
38
TV

FIG. 7

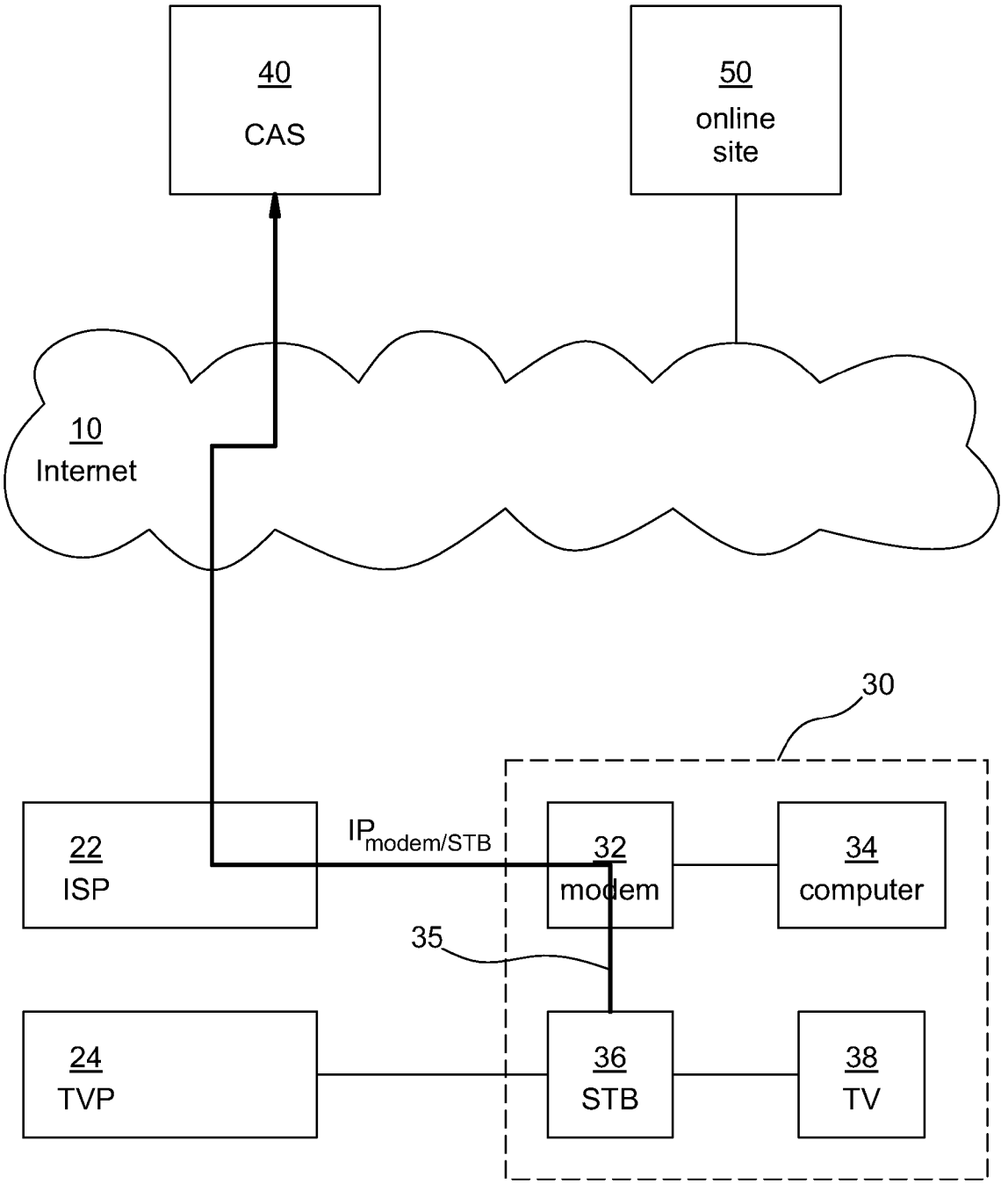
40
CAS
50
online
site
10
Internet
30
22
ISP
IP modem/STB
32
modem
34
computer
35
24
TVP
36
STB
38
TV

FIG. 8

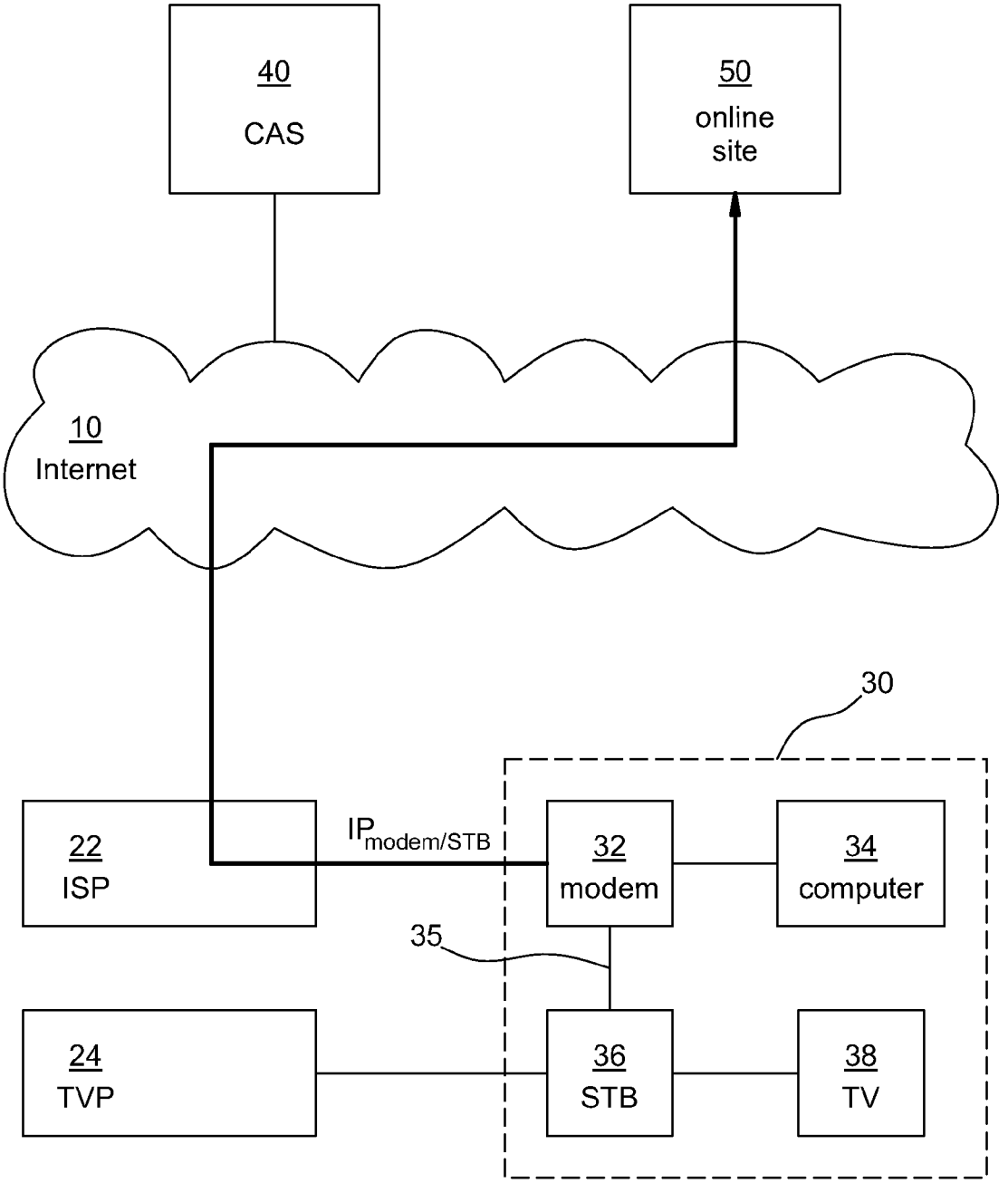
40
CAS
50
online
site
10
Internet
30
22
ISP
IPmodem/STB
32
modem
34
computer
35
24
TVP
36
STB
38
TV

FIG. 9

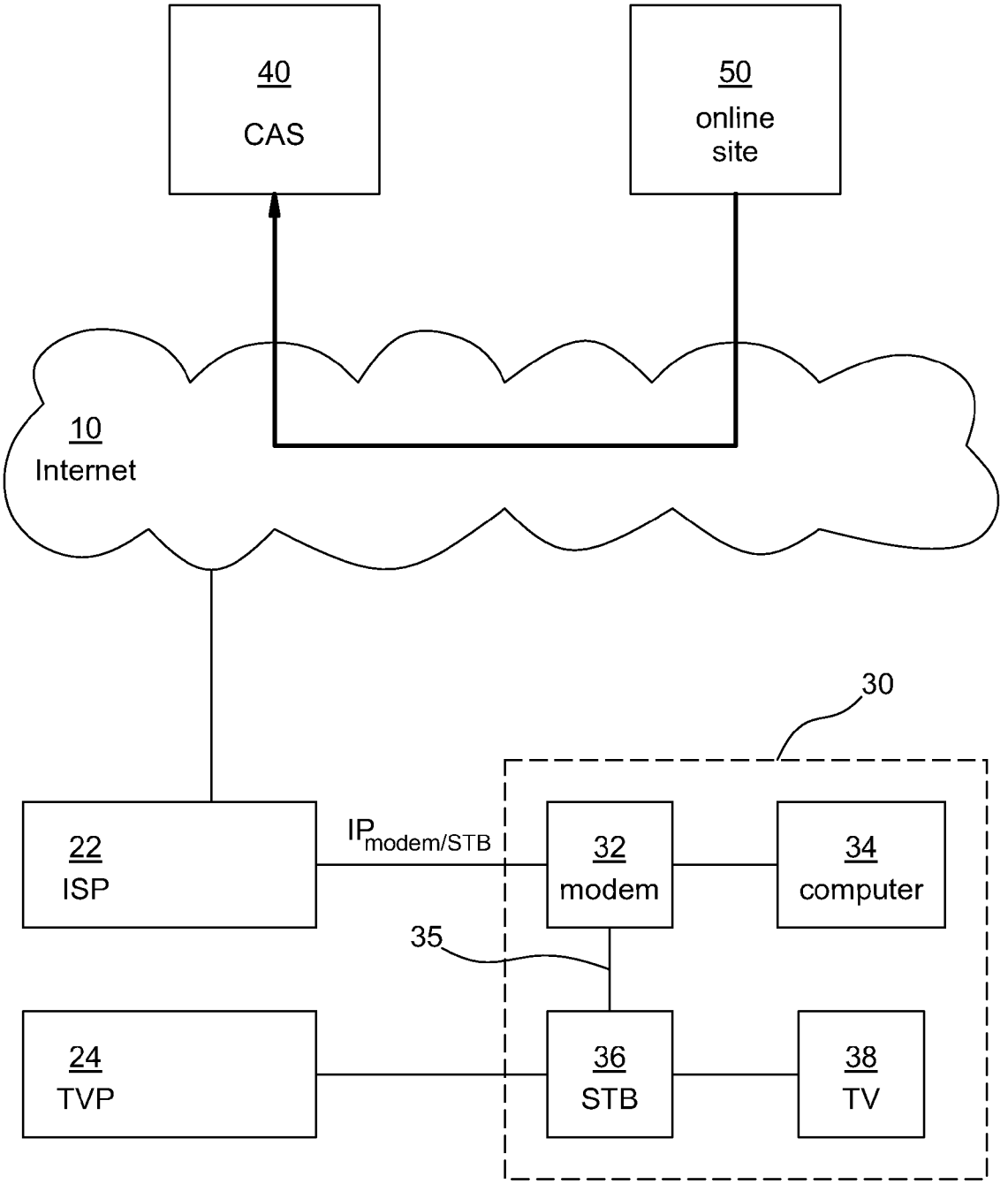
40
CAS
50
online
site
10
Internet
30
22
ISP
IPmodem/STB
32
modem
34
computer
35
24
TVP
36
STB
38
TV

FIG. 10

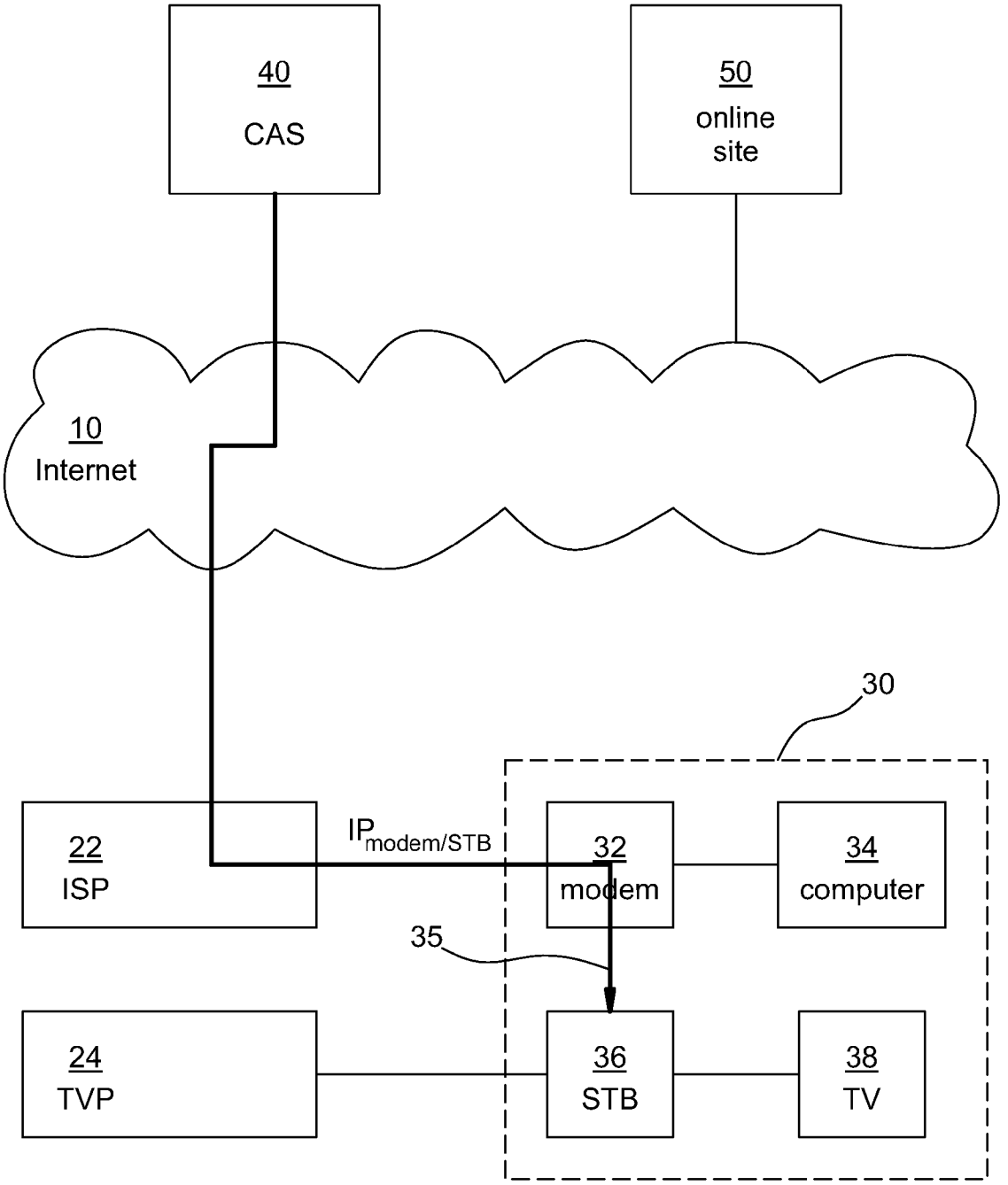
40
CAS
50
online
site
10
Internet
30
22
ISP
IPmodem/STB
32
modem
34
computer
35
24
TVP
36
STB
38
TV

FIG. 11A

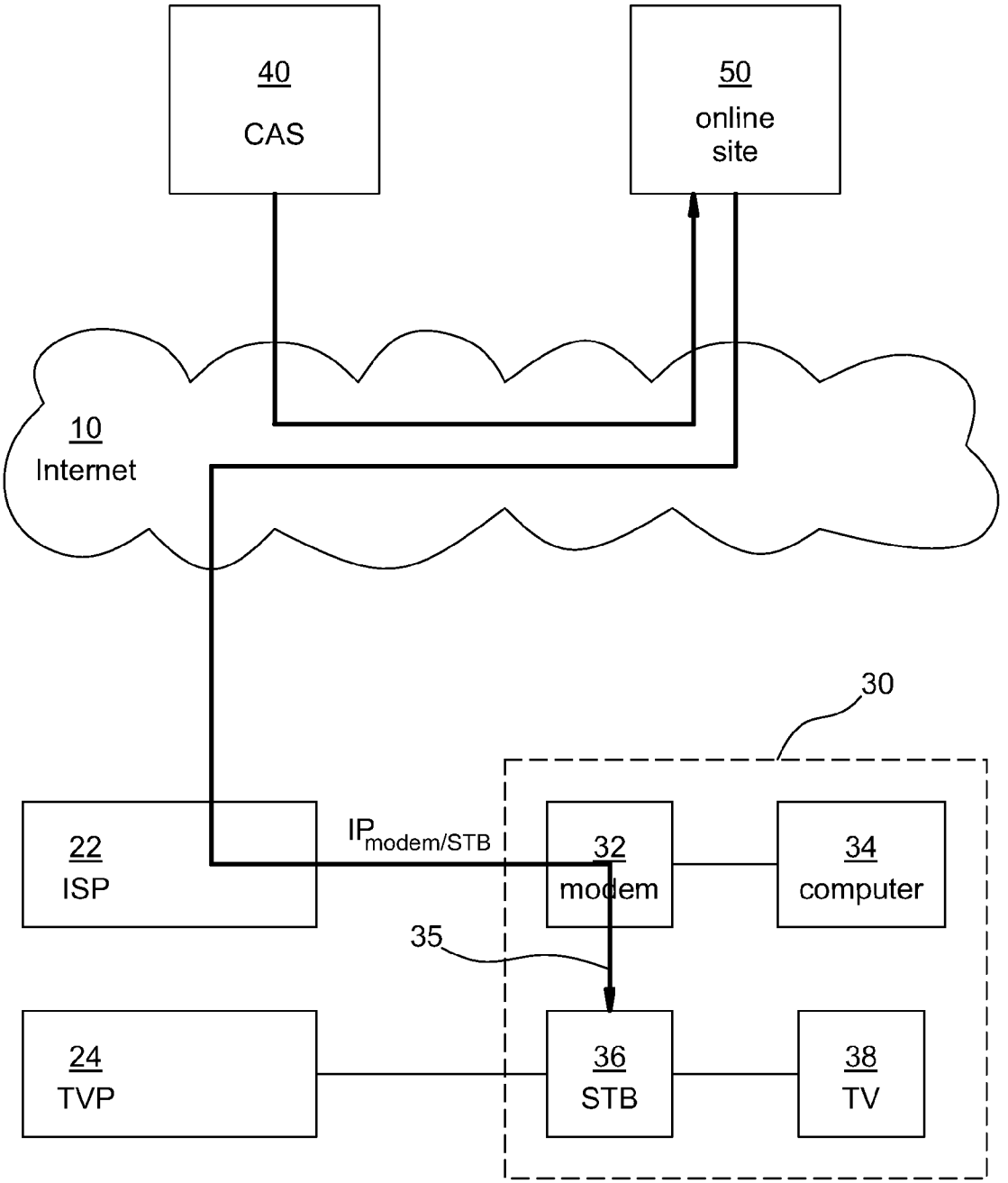
40
CAS
50
online
site
10
Internet
30
22
ISP
IPmodem/STB
32
modem
34
computer
35
24
TVP
36
STB
38
TV

FIG. 11B

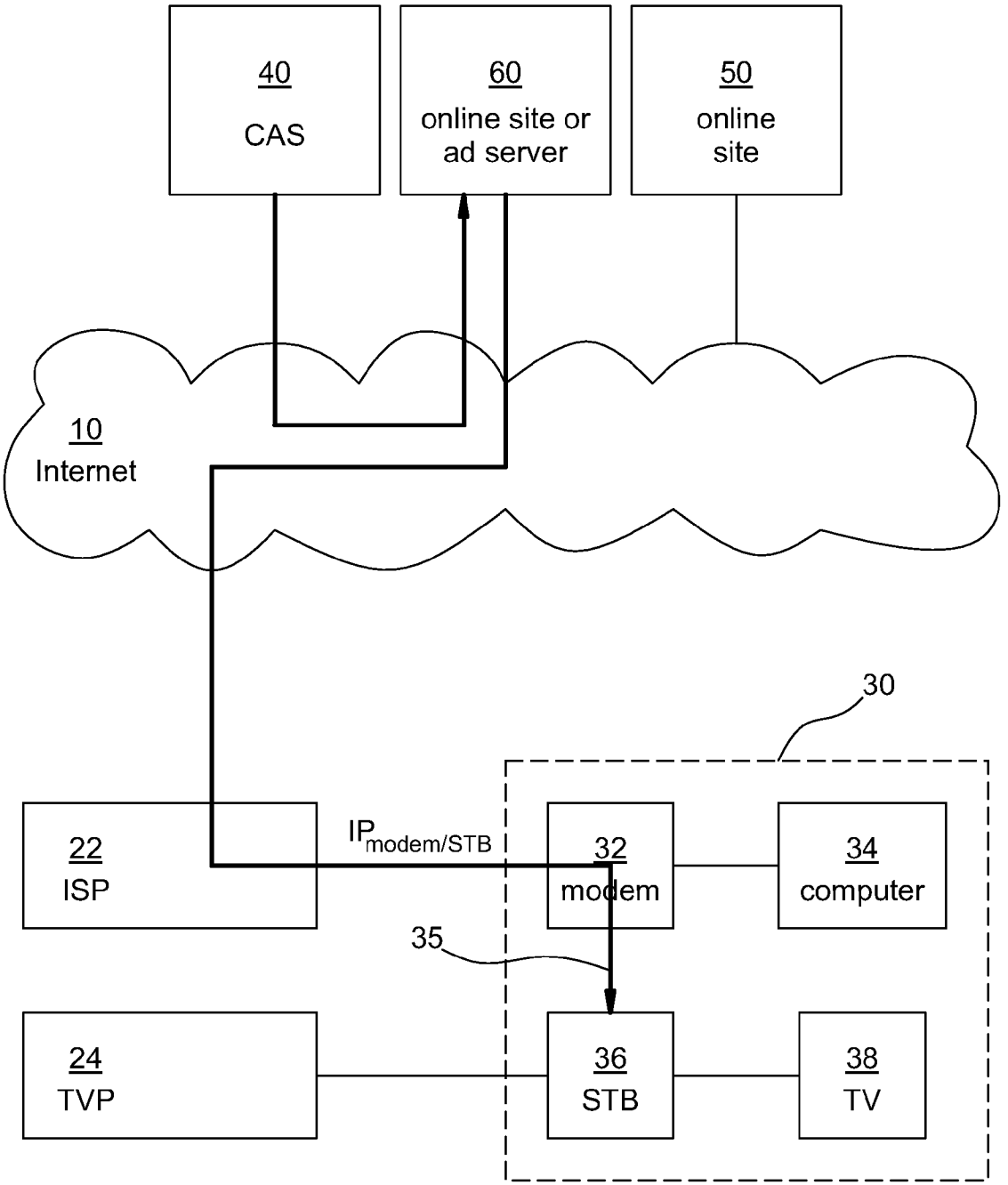
40
CAS
60
online site or
ad server
50
online
site
10
Internet
30
22
ISP
IPmodem/STB
32
modem
34
computer
35
24
TVP
36
STB
38
TV

FIG. 11C

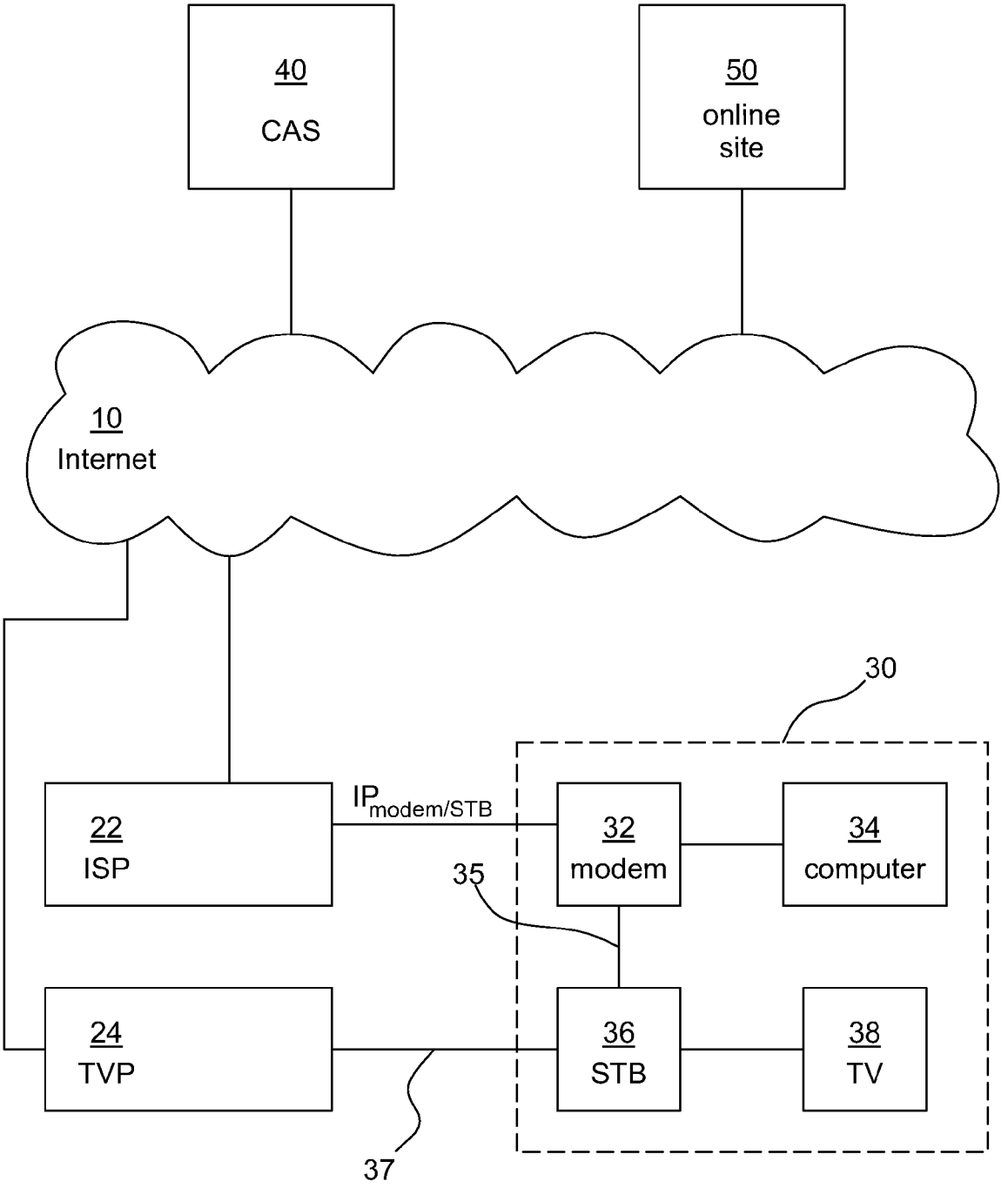
40
CAS
50
online
site
10
Internet
30
22
ISP
IP modem/STB
32
modem
34
computer
35
24
TVP
36
STB
38
TV
37

FIG. 12

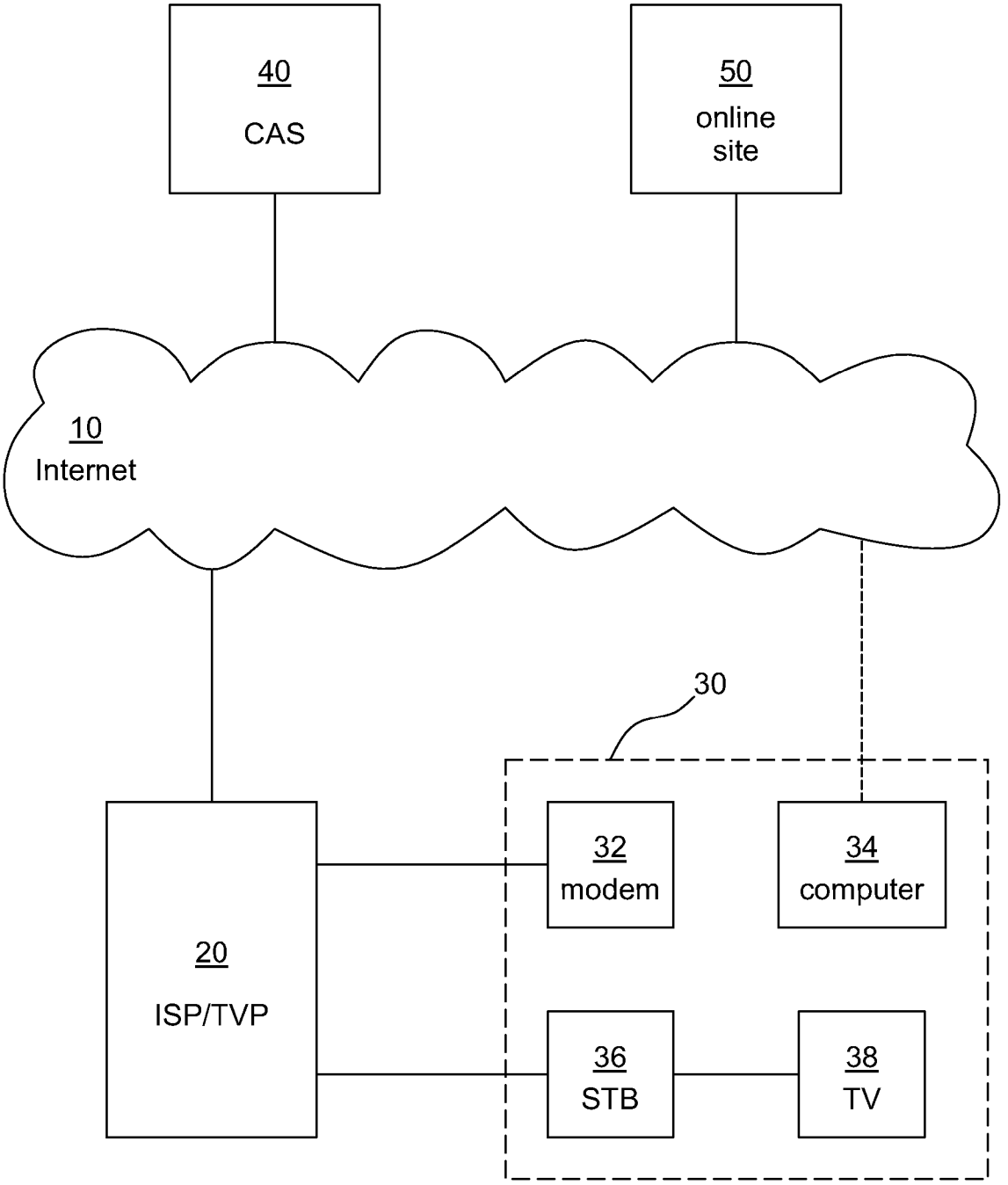
40
CAS
50
online
site
10
Internet
30
32
modem
34
computer
20
ISP/TVP
36
STB
38
TV

FIG. 13

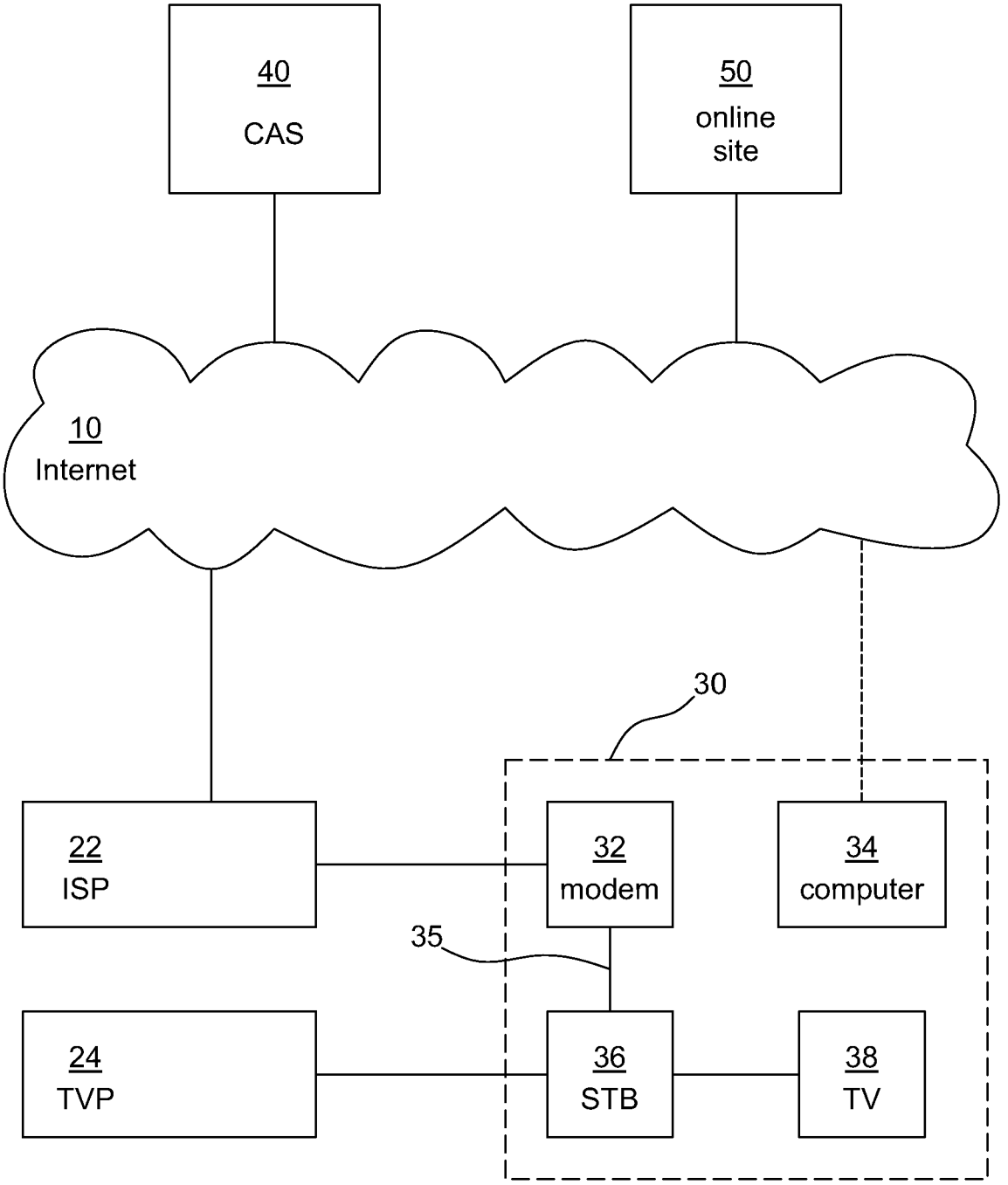
40
CAS
50
online
site
10
Internet
30
22
ISP
32
modem
34
computer
35
24
TVP
36
STB
38
TV

FIG. 14

TARGETED TELEVISION ADVERTISEMENTS BASED ON ONLINE BEHAVIOR

BACKGROUND

The field of the present invention relates to online access and targeted delivery of advertisements. In particular, television advertisements are targeted based on observed online (i.e., Internet) behavior of a television viewer without employing personally identifiable information.

Some of the terms used in the present disclosure or appended claims are defined as follows.

Television provider (TVP)—an entity that provides television service to a subscriber or user via any suitable transmission medium, including but not limited to coaxial cable, fiber-optical cable, network cable, phone line, satellite transmission, or VHF or UHF transmission.

Internet service provider (ISP; equivalently, an online access provider)—an entity that provides online access to a subscriber or user via any suitable transmission medium, including but not limited to coaxial cable, fiber-optical cable, network cable, phone line, satellite transmission, wireless transmission (e.g., WiMax, WiFi, other IEEE 802 wireless protocols, etc.), or VHF or UHF transmission. The online access enables the subscriber to access the Internet and its myriad online sites, or to access any future network successor to the Internet.

Set-top box (STB)—a device that connects a television and a signal source. The STB receives an incoming signal, extracts content from the received signal, and transmits the extracted content to the television to be presented to a viewer. The signal source can be a computer network cable (e.g., an Ethernet or other transmission-speed cable), a satellite dish, a coaxial cable connected to a cable television system, a telephone line or digital subscriber line (DSL), a wireless network connection, an antenna (VHF, UHF, digital, or other), or another suitable signal source. The content can include, but is not limited to, video (which often can include an audio portion), audio, Internet web pages, interactive games, or other content. An STB may or may not include a dedicated television tuner. Despite its name, an STB need not be physically located on top of a television set literally. Under current technology, STBs often are located physically adjacent to the television set, such as in a media cabinet or the like, but it is not even necessary that the STB be located in proximity to the television. Nor is it necessary that the STB be a box, literally. Rather, a STB might be implemented, for example, as a circuit board, integrated circuit, set of integrated circuits, or software that is physically integrated with another "box," such as the television, a cable or other connection, a computer, or a building equipment or junction box, which also has other functions, or without being housed in any "box" at all.

Digital video recorder (DVR, alternatively personal video recorder or PVR)—a device that stores video content in a digitally encoded format on a digital storage medium, such as a hard drive, and enables playback of the stored content. A DVR can comprise a stand-alone unit connected to a television, an STB, or a signal source, or the DVR can comprise software that programs a computer to perform DVR storage and playback functions.

Video-on-Demand (VOD)—a system that allows users to select and view video content delivered from a signal source in response to a request from the user. Typically, the requested video content can be viewed at a time of the user's own choosing and can be paused, rewound, or fast-forwarded as desired by the user. A VOD system can "stream" the content

(enabling viewing of portions of a requested item of video content while other portions are still being delivered from the signal source), or the VOD system can "download" the content and allow viewing only after a complete item is delivered from the signal source. Some VOD systems allow users to select and watch video content over a network as part of an interactive television system.

Interactive Television (interactive TV, iTV, idTV, or ITV)—any television system that enables a viewer to interact with video content delivered to a television. Interactive television can include, but is not limited to, access to Web sites through TV "crossover links," electronic mail and online chat, online commerce, or enhanced graphics (relative to standard television offerings).

Internet Protocol Television (IPTV)—a system wherein television content is delivered via a computer network using Internet Protocol (IP). For residential users, IPTV is often provided in conjunction with Video on Demand and can also be bundled with Internet services such as Internet access and Voice-over-IP (VoIP). Commercial bundling of IPTV, VoIP, and Internet access is sometimes referred to in the industry as a "triple play." Additional telecommunications services (e.g., mobile voice or data service) can be added, yielding a "quadruple play" and so forth. IPTV typically is supplied by a broadband service provider using a closed network infrastructure. IPTV also can be provided over the Internet or other publicly accessible computer network, in which case it might be referred to as Internet TV or TV-over-Internet. IPTV also can be used to deliver video or other content over a corporate LAN or other business network.

Online user interface device—any user interface device used to access a remote network such as the Internet, including but not limited to a cell phone or mobile handset, a personal digital assistant (PDA), or a networked computer (desktop, workstation, notebook, laptop, or other).

Online access device—any device used to connect an online user interface device to a remote network such as the Internet, including but not limited to a modem, a wired or wireless router, a wireless access point, a wired network adapter (e.g., Ethernet adapter), a wireless network adapter (e.g., IEEE 802.11, ED-VO, EDGE, HSPA, CDMA, GSM, or other), or an optical fiber based network adapter (e.g., a network interface unit or optical network terminal). Different types of online access devices can and sometimes are combined into a single unit (e.g., a modem that also functions as a router for a LAN). An online user interface device and an online access device can be, and sometimes are, combined into a single unit (e.g., a computer with a built-in Ethernet adapter, wireless adapter, or modem).

Router—any device that acts as a junction between networks, to buffer and transfer data between or among them. For example, a router can be employed to connect a local area network (LAN) to the Internet, thereby enabling online user interface devices connected to the LAN to share a connection to the Internet through the router. The router receives data from devices on the LAN and transmits them to the Internet directed to their corresponding destinations, and receives data from the Internet and directs them to the corresponding devices on the LAN.

Modem—a device that enables online access by a user by acting as an interface between the online access provider's network transmission system and the user's computer or other online user interface device. Modems vary according to the type of provider network transmission system. Unless a specific type of modem is specified, the term "modem" shall encompass telephone modems, cable modems, DSL

modems, wireless modems, satellite modems, or modems for providing online access to any other suitable network transmission system.

Cable modem—a type of modem that enables digital data transmission over cable television infrastructure. Cable modems are primarily used to deliver broadband Internet access using modulation frequencies that are not used for traditional television transmission.

Asymmetric Digital Subscriber Line (ADSL, or often DSL)—a data communications technology that enables faster data transmission over a copper telephone line than a conventional modem can provide. ADSL data transmission employs frequencies that typically are not used for voice transmission, usually frequencies beyond the range of normal human hearing (higher than about 20 kHz). Propagation of such high-frequency signals over standard copper telephone lines typically is poor, typically limiting the use of DSL to distances less than about 5 km. Once the signal reaches the telephone company's nearest central office (CO), the ADSL signal is stripped off and routed into a conventional data network, while any voice-frequency signal is routed into the conventional telephone network. That arrangement enables a single telephone line to be used for both data transmission and telephone calls simultaneously.

DSL modem—an ADSL transceiver, also known as an ADSL modem, used to connect one or more computers to a phone line to use an ADSL service. A DSL modem also can be referred to as a remote ADSL termination unit (ATU-R). An ADSL modem can also be configured to act as a router, managing the connection and sharing of the ADSL service with multiple computer or other networked devices. Such a combined device can be referred to as a DSL modem/router or similar terminology.

Digital Subscriber Line Access Multiplexer (DSLAM)—a device enabling high-speed connections between telephone lines and a computer network such as the Internet. Typically it is located at a telephone company central office (CO) and connects multiple Digital Subscriber Lines (DSLs) to a computer network, typically the Internet, using a suitable multiplexing technique.

Cable Modem Termination System (CMTS)—equipment typically found in a cable company's headend that is used to provide data communication over the cable television infrastructure, thereby enabling the cable company to offer services such as broadband Internet access or VoIP to its subscribers. To provide high-speed data services (i.e., broadband access), a cable company typically connects its headend to the Internet using high capacity data links, directly or through a network service provider. On the subscriber side of the headend, the CMTS enables data communication with each subscriber's cable modem. Various CMTSs are capable of serving different cable modem population sizes, which can range from 4,000 cable modems to 150,000 or more. A given cable company headend may have only a few CMTSs, or a dozen or more, depending on the size of the cable modem population serviced by that headend.

Dynamic Host Configuration Protocol (DHCP)—a system that automatically assigns Internet Protocol addresses (IP addresses), subnet masks, default routers, and other IP parameters, which are required for proper routing of data transmissions to or from a particular device connected to the network. The assignment usually occurs when a DHCP-configured computer, modem, router, or other device boots up or regains connectivity to the network. The DHCP client (i.e., DHCP software resident in the computer) sends out a query requesting a response from a DHCP server on the network. The query is typically initiated immediately after booting up and before the client initiates any IP-based communication with other hosts. The DHCP server then replies to the client with its assigned IP address, subnet mask, domain name server (DNS), and default gateway information (referred to as "stateful" assignment). The assignment of the IP address usually expires after a predetermined period of time, at which point the DHCP client and server renegotiate a new IP address from the DHCP server's predefined pool of IP addresses. Because, under DHCP, the IP address of a given computer varies over time, various network-related functions are more difficult. For example, configuring firewall rules to allow access to or from a machine that receives its IP address via DHCP is more complicated because the IP address varies from time to time. Network administrators typically must enable access to an entire remote DHCP subnet for a particular TCP/UDP port. Such complications arise in other instances as well. Many residential routers and firewalls are configured in the factory to act as DHCP servers for home networks. A computer can also be used as a DHCP server. Internet Service Providers (ISPs) generally use DHCP to assign individual IP addresses to subscribers. DHCPv6, which is the Dynamic Host Configuration Protocol for Internet Protocol Version 6 (IPv6), enables local generation of IP addresses (i.e., "stateless" assignment). Although such stateless address auto-configuration of IPv6 substantially eliminates a prime motivation for DHCP in IPv4, DHCPv6 can still be used to statefully assign addresses if needed or desired by a network administrator. DHCPv6 can also be used to distribute information that is not otherwise discoverable, e.g., the domain name server.

Behavioral targeting—the delivery of specific advertisements to a subscriber, the advertisements being selected on the basis of activity of the subscriber, typically recent activity, including but not limited to: online searches conducted by the subscriber; content accessed by the subscriber online or on television; online advertisements viewed, clicked on, or otherwise accessed by the subscriber; online shopping or purchases made by the subscriber; and any other form of previous subscriber activity.

Central Ad Server (CAS)—a computer server that manages delivery of online advertisements to visitors of online sites. A local ad server can be typically run by a single online publisher to serve ads to visitors of websites of that publisher's Internet domains, or by a single advertiser to serve ads into ad space acquired by the advertiser on various other websites. A third-party or remote ad server typically is remotely located and delivers advertisements of various advertisers to visitors of websites of multiple domains owned by multiple publishers. The remote ad server acts as a central conduit for delivering advertisements, enabling advertisers and publishers to track the distribution of their online advertisements and to control the rotation and distribution of their advertisements across the Internet from one location. The advertisements can be stored on the CAS for later delivery, can be transmitted to the CAS and then delivered from the CAS upon receiving an ad request, or can be delivered from another source in response to an ad request received and routed by the CAS. Examples of third-party ad servers include DoubleClick's DART for Publishers central ad server (also known as DFP) and DoubleClick's DART for Advertisers central ad server (also known as DFA).

Profile provider—An entity that collects profile information that is used to target advertisements. In the context here, the profile provider cooperates with a CAS, which receives all or part of the collected profile information from the profile provider for use in targeting TV advertisements. User profile information derived from online activity can include

observed online behavior of a user accessing the Internet or demographic information collected from a user accessing the Internet. Examples of profile providers can include, but are not limited to, any entity that owns or uses: (1) a visited Internet site server; (2) a server delivering content, images, audio, video, text, or any combination directed to an online user interface device (such as a computer or other online interface device) via an online access device (such as a modem or router), either directly or indirectly (e.g., via a redirect); (3) a server delivering an ad to an online user interface device via an online access device on behalf of an advertiser or an ad network; (4) a server recording an activity conducted from an online user interface device such as a click on an ad or a link to an ad, a viewing of an ad, a click on a link to particular content, a search, a request for product information, receipt of particular content, a product purchase, a telephone call made, or any other selected and definable user activity; or (5) a server facilitating instant messages or any other kind of communication on behalf of the user. Another example of a profile provider is: (6) a company sponsoring and having access to a computer program located on the user's computer or other online user interface device that can observe the user's online activity (with the user's permission), such as a browser toolbar or desktop search software. A profile provider, broadly, can be: (7) any entity able to collect behavioral profiles (observed online activity) or demographic profiles (provided by the user), preferably for purposes here including the IP address used when the profile was observed or collected and the date and time the profile was observed or collected, regardless of whether or not the entity collected a given profile directly through contact with the user's computer or indirectly from another entity such as those listed in this paragraph. In some cases, a user's online activity will result in direct contact between the online user interface device via an online access device and the profile provider, e.g., if the profile provider is an online commerce site, the user makes a purchase at the site, and the online commerce site generates a profile for that user. In other instances there may be no direct contact between the profile provider and the user, e.g., if the user makes a purchase at an online commerce site that in turn reports information pertaining to the user to the profile provider. In some situations, also, a profile provider might also own or otherwise control a CAS, in which case user profiles can be immediately available to the CAS without need for transmission between separate entities.

Profiles or partial profiles provided by a profile provider to a CAS can contain any quantity of profile information, such as, in one example, just an online access IP address used by a person at the time his profile was collected and the identity of the profile provider. The IP address can be provided by the profile provider itself or might be obtained by the CAS when a user engages in any online activity or provides an item of demographic information and is redirected by a profile provider to the CAS. In another example, a profile can be more extensive and can include demographic or behavioral information, such as an extensive browsing history, shipping or purchase histories, content viewed, and other information concerning the user's characteristics or the user's activities. Although the profile provider is an entity, many or most of the actions attributed to the profile provider are actually performed by equipment under the administrative control of the profile provider, such as computers, servers, software running on those computers or servers, network connection hardware or software, or other equipment. Such actions may still be characterized as being performed "by the profile provider," whether performed automatically, semi-automatically, or manually.

Personally Identifiable Information (PII)—information that can be used to identify a specific person, including but not limited to: name, Social Security number (SSN), date of birth, street address, email address, static IP address (if any), phone number (home, work, wireless), financial account numbers (bank accounts, credit accounts, or any other financial data), driver's license number, vehicle registration number, vehicle license number, facial photographs, fingerprints, handwriting or signature, or any other information that can assist in identifying a specific person.

Non-Personally-Identifiable Information (non-PII)—information about a person that typically cannot be used to specifically identify that person, including but not limited to: city, state, or country of residence, age, gender, race, ethnicity, school or workplace (if sufficiently large), salary or income, hobbies, dynamically assigned IP addresses, online sites visited, online searches conducted, or other information that is useful to know about a person but done not by itself allow one knowing the information to identify the particular person.

Cookie—a text file placed on a user's computer by a server that also serves content to the user's computer using browser software. The cookie typically can be read or altered only by a server operating under the same Internet domain as the server that originally placed the cookie. The cookie file can be used to identify a computer that has already been in contact with the same domain and can also be used to store PII or non-PII pertaining to a user of that computer. In a first example, a cookie can store non-PII such as previous searches conducted at the site, or pages viewed or visited at the site, by the computer user. In a second example, a cookie can be used to store a username used by the user to access a site, customized preferences of the user, or various pieces of PII. It should be noted that a cookie file can also be created, altered, or deleted by software located on the user's computer.

Television advertisement (TV ad)—a full screen video ad, a partial screen video ad, a banner ad, a text ad, an audio ad, or any other form of advertisement suitable for delivery to and visual or audible presentation by a television set.

Various systems are used currently for targeting advertisements based on user/viewer/customer behavior. Many of these rely on the collection of personally identifiable information (PII) to enable correlation of the person exhibiting the behavior and advertisements targeted at that person. There are some examples wherein advertisements can be targeted without collecting PII, but in such examples it is typically the case that the medium of the behavior and that of the advertisement are the same. For example, many grocery stores hand out so-called "club cards" that need not be linked to PII. A shopper presents the card at checkout to receive various discounts, thereby allowing the store to link the list of purchased items to the card. As the system "learns" the shopper's purchasing habits, the system begins issuing coupons targeted at purchases that the shopper has made previously or that the system predicts the shopper may wish to make based on past purchases. In another example, online advertisements are readily targeted based on an Internet user's online activities without using PII. The use of cookies enables an ad server to recognize an Internet site visitor who has been previously presented with ads by the ad server or who has conducted searches or accessed content at sites linked to the ad server. The ad server can target future advertising to the site visitor based on that previous activity. A user who has searched for airline tickets to southern California on an online travel site, for instance, can later receive targeted online advertisements for Disneyland, delivered perhaps while visiting some other

online site, to the user's computer from an ad server that collected the user's search information from the online travel site.

It becomes more difficult to avoid the use of PII when it is desired to target advertising in one medium based on activity in another. Various schemes currently are implemented, under development, or being considered wherein PII is used, e.g., to target television advertisements based on a viewer's online behavior. Some of those schemes involve agreements or alliances among television providers, online access providers, online search portals, or online sites. The PII has typically been required to make the connection between the different media, because different devices are typically employed to access each one.

A significant shortcoming of many such cross-media ad-targeting systems is the need to use PII to target advertisements delivered in one medium based on user behavior in another medium. Battelle (John Battelle, *The Search*, Portfolio, N.Y., 2005) describes the delivery of personalized ads to a DVR based on observed online behavior of the DVR user (conducted searches, sites visited, etc., including PII) when he or she was using a personal computer for online access and further describes financially rewarding the user for watching the ad (e.g., by reducing the fee for the TV service or by offering "free" TV service). However, many consumers object to the merging or correlation of personally identifiable information and online behavior. Financial incentives such as free or reduced-fee games, screen-savers, content, or Internet access in return for information useful for targeting ads requiring collection and use of PII and data pertaining to online behavior generally have not proven to be attractive to the public in the past. Such combining of PII with online behavior data has proven particularly unattractive to consumers having larger incomes, who advertisers are especially interested in reaching.

An example of a cross-media ad-targeting system, planned to be implemented as a result of an announced alliance between Google and BSkyB, is a system wherein BSkyB can use searches conducted by their subscribers on the BSkyB Internet search portal to deliver targeted ads to the DVR's of those same subscribers. BSkyB already has PII pertaining to its television subscribers, so linking search results from its own search portal site may not seem too alarming to its subscribers. Nevertheless, PII is still required to target the television advertisements. However, many and perhaps most search sites and content sites accessed online are not owned or controlled by television service providers. In addition, many and perhaps most search sites and content sites do not typically collect PII to identify those users who access them online.

It is therefore desirable to provide systems and methods for delivering targeted television advertisements to users or viewers based on their online behavior (searches performed, sites visited, online ads viewed, an so on), but without using PII to link the television viewer to his or her online activity.

SUMMARY

In a method for delivering targeted television advertisements based on online behavior, IP addresses indicating online access devices and IP addresses indicating television set-top boxes are electronically associated, for a multitude of users. Using user profile information derived from online activity from one of the online access IP addresses, a television advertisement is selected, such as by using behavioral targeting or demographic information, and automatically directed to the set-top box indicated by the set-top IP address associated with that online access IP address. Preferably neither the user profile information nor the electronic association of online access and set-top box IP addresses includes personally identifiable information.

Objects and advantages pertaining to delivery of targeted television advertisements based on online behavior may become apparent upon referring to the exemplary embodiments illustrated in the drawings and disclosed in the following written description and/or claims.

BRIEF DESCRIPTION OF THE DRAWINGS

FIGS. **1-5** and **6**A-**6**C illustrate schematically a system for targeting television advertisements based on online behavior in which online access and television service are provided by a common provider.

FIGS. **7-10**, **11**A-**11**C, and **12** illustrate schematically a system for targeting television advertisements based on online behavior in which online access and television service are provided by different providers.

FIGS. **13** and **14** illustrate schematically a system for targeting television advertisements based on online behavior in which online access is provided by a mobile device.

The embodiments shown in the figures are exemplary and should not be construed as limiting the scope of the present disclosure and/or appended claims.

DETAILED DESCRIPTION OF EXEMPLARY EMBODIMENTS

In the following disclosure and appended claims, the term "user" shall be construed as one or more persons receiving online access or television service at a delivery end-point within a household, office, business, or other site or establishment served by an online access provider or television service provider. Thus, delivery of a television ad to "the user" based on access of an online site by "the user" might involve a single person, or one person might access the online site while the corresponding television ad might be delivered to another person in the household, office, business, or other site or establishment. The delivery end-point may be one television set or multiple sets of a given user; likewise, online access may involve one or more computers or other online interface devices of a given user. In some instances, a business having multiple physical locations may be served by separate online or television services, but in other instances, a business may have an internal LAN or WAN that extends service provided to multiple physical locations. Also, some computers and televisions are portable, and can access the service provided from remote locations. Accordingly, the term "user" is intended to refer to that person or those persons who receive the provided services and does not require a fixed or single location in such instances.

In the disclosed exemplary systems and methods for delivering targeted television advertisements based on online behavior, IP addresses indicating online access devices and IP addresses indicating television set-top boxes are electronically associated, for a multitude of users. Using user profile information derived from online activity from one of the online access IP addresses, a television advertisement is selected, such as by using behavioral targeting or demographic information, and automatically directed to the set-top box indicated by the set-top IP address associated with that online access IP address. Preferably neither the user profile information nor the electronic association of online access and set-top box IP addresses includes personally identifiable information. The online access and set-top box IP addresses

can be electronically associated for many or all of the users of the multitude before directing television ads to any of the multitude of users. Alternatively, online access and set-top box IP addresses can be electronically associated for one or a few of a multitude of users at any given time as needed for directing television ads to users, with additional IP addresses electronically associated at later times for directing other television ads to additional users.

In an exemplary system for serving targeted television advertisements based on a user's online behavior, the user receives both television service and Internet access from a common service provider that acts as both an internet service provider and a television provider. Accordingly, such a provider entity can be referred to as ISP/TVP. The basic layout of this scenario is illustrated schematically in FIG. **1**, wherein online access device **32**, online user interface device **34**, set-top box **36**, and television **38** are associated with a user **30**. In some instances online access device **32** and online user interface device **34** are integrated in a single unit, while in other instances they comprise separate units. Likewise, in some instances set-top box **36** and television **38** are integrated in a single unit, while in other instances they comprise separate units. The common service provider **20** can offer Internet access via any suitable online access device **32** (a modem, router, or network adapter suitable for connecting to cable, DSL, wireless, satellite, Ethernet, or any other transmission system) along with the television service provided through set-top box **36** (STB **36**). For purposes of the subsequent discussion, online access device **32** shall be described and shown in the figures as a modem and online user interface device **34** shall be described and shown in the figures as a computer separate from modem **32**. These descriptions shall not be construed as limiting the scope of the present disclosure or appended claims.

Many users of online access service (i.e., subscribers) are not provided with a static IP address; instead a dynamic IP address (designated as IP_{modem} in the figures) is allocated to the user's modem **32** for online access, typically through DHCP. The online access IP address is allocated by the Cable Modem Termination System (CMTS) if ISP/TVP **20** is a cable company, whereas the online access IP address is allocated by the Digital Subscriber Line Access Multiplexer (DSLAM) if ISP/TVP **20** is a phone company. Other types of online access providers allocate dynamic IP addresses in a similar manner using analogous equipment. It is to the modem IP address (i.e., the online access IP address) that traffic from a remote network is routed to the modem **32** and hence to other devices sharing the modem connection to the remote network; the modem IP address is the only address "seen" by the remote network. The dynamically assigned online access IP address is replaced after some time interval by another IP address allocated to modem **32**. ISP/TVP **20** transmits (as in FIG. **2**) to a Central Ad Server (CAS **40**), or perhaps to multiple CASs, the online access IP addresses of a multitude of users along with corresponding pseudonyms or aliases associated with the IP addresses, e.g., user XY**123** is connected to the Internet through a modem **32** that is assigned IP address aaa.bbb.ccc.ddd. Each online access IP address and its associated pseudonym can be transmitted to the CAS **40** immediately upon its allocation or reallocation by ISP/TV **20**, which could be advantageous in sending TV ads to the user's STB quickly. Alternatively, online access IP addresses and the corresponding pseudonyms can be transmitted periodically to CAS **40** at any necessary or desirable time interval. The pseudonyms and online access IP addresses are non-PII. The multitude of users can be any set made up of a large number of users and does not necessarily include every user having online access or television service through a particular company or provider. For example, the system described can operate only with respect to a subset of users, such as those users who have capabilities needed to implement this system (e.g., suitable hardware, software, operating system, etc.), those who have done some sort of subscription, or those selected based on criteria as to which operation of the system is considered desirable, less expensive to implement, or profitable. For example, those users might be chosen that have STBs with an operating system, software, or hardware capable of receiving the software required to accept TV ads from a CAS. In any event, the fact that other users may exist as to which the system does not operate is not intended to negate the advantages of the system as to those users for which the system does operate.

Because the user pseudonym and online access IP address are associated with the modem **32**, multiple computers or other devices sharing the modem connection for online access will share the online access IP address and the user pseudonym. When the user's STB **36** is used to access a web-based server (for accessing an online programming guide, for example, through the cable television transmission system or through a connection to the Internet), ISP/TVP **20** additionally transmits (as in FIG. **2**) to the CAS **40** the IP address allocated to the STB (designated as IP_{STB} in the figures) and associates it with the pseudonym previously associated with the user's modem **32**, e.g., user XY**123** has an STB at IP address eee.fff.ggg.hhh in addition to a modem for online access at IP address aaa.bbb.ccc.ddd. The association of the user's online access IP address (i.e., modem IP address) and the user's STB IP address at CAS **40** constitutes non-PII. ISP/TVP **20** knows the IP address of STB **36** because the web based server accessed by STB **36** is typically operated by ISP/TVP **20**. If STB **36** has its own modem (an increasingly common scenario as the transition is made from IPv4 to IPv6), the IP address of STB **36** is allocated by ISP/TVP **20** via the CMTS or DSLAM or other similar system, typically using DHCP. Alternatively, in the event that STB **36** accesses the web-based server via a connection **35** to the same modem **32** that provides the user's online access (as in FIG. **3**), STB **36** will have reported to CAS **40** the same IP address that was reported for the user's online access modem **32**. In all of those cases, the CAS **40** can now associate the IP address for the user's online access (modem **32**) with an IP address for the user's STB **36**, and the association is not PII.

ISP/TVP **20** reports to CAS **40** that user XY**123** is accessing the Internet using online access IP address aaa.bbb.ccc.ddd and has STB **36** using STB IP address eee.fff.ggg.hhh. These associations can be stored on CAS **40**, or only by ISP/TVP **20**, as desired. If user XY**123** engages in online activity from IP address aaa.bbb.ccc.ddd (for example, accessing an online site **50**, as in FIG. **4**), then online site **50** can electronically communicate (as in FIG. **5**) an indication of the user's online activity to CAS **40**, which in turn can cause a television advertisement to be directed to the STB IP address that is associated with online IP address aaa.bbb.ccc.ddd. In this example the online site **50** acts as a profile provider. Without relying on PII, CAS **40** knows that IP address aaa.bbb.ccc.ddd is associated with user XY**123** and that user XY**123** has a set-top box with IP address eee.fff.ggg.hhh, and CAS **40** causes the television advertisement to be directed to IP address eee.fff.ggg.hhh that indicates STB **36** (as in FIGS. **6A-6C**). In some implementations, the television advertisements are delivered to STB **36** using an ad server controlled by ISP/TVP **20**, using either an IP-based protocol (an example of which is shown in the referenced figures) or a television delivery system (e.g., a dedicated cable

advertisement channel). In one such implementation, that ad server report to CAS **40** the user pseudonym (XY**123**) and CAS **40** provides that ad server with TV ads targeting user XY**123** based on profile information collected from IP addresses reported by ISP/TVP **20** as belonging to XY**123**. In another such implementation, that ad server reports the IP addresses used by each of a multitude of users of Internet services provided by ISP/TVP **20** along with the times and dates that those addresses were used, and CAS **40** provides that ad server with TV ads targeting each of the multitude of Internet users based on profile information received from the reported IP addresses at the corresponding reported times and dates. Personal privacy is maintained in these implementations because (1) no PII is used by CAS **40** in these implementations, and (2) although ISP/TVP **20** has the capacity to identify the users, the ad server of ISP/TVP **20** does not learn the profile information collected for and received by CAS **40**.

The particular television advertisement thus directed typically is selected for delivery to the user's STB **36** based on the user's online behavior (e.g., merely accessing the online site **50**, viewing a particular web page, performing a particular search, clicking on a particular link or ad, online shopping or purchases, or other activity). Information about observed online behavior (i.e., indications of online activity) or collected demographic information can be used by the CAS or by the profile provider to direct a targeted TV ad. In the latter case, the CAS has just the IP address of the profiled user and the identity of the profile provider but not the observed online behavior or demographic information collected by the profile provider, so the CAS can direct a TV ad to the user merely by enabling the profile provider to arrange for the delivery of a targeted TV ad based on the observed online behavior or demographic information available to the profile provider. Examples of profile providers are given above.

The profile provider (such as the proprietor of online site **50**) can send an electronic communication to the CAS, preferably automatically such as by having the profile provider's server pre-programmed to send such electronic communication, which electronic communication contains information that the CAS will use in causing a selected TV ad to be transferred to the STB at the proper time. The electronic communication received by the CAS contains information derived from the interaction of the user with an online site (i.e., online activity), which can be online site **50** or another online site for which the profile provider has access to data about user interactions. The electronic communication can take a variety of forms, including: (1) an indicator of the TV ad that should be shown, such as an URL or ad title given by the profile provider to retrieve the correct TV ad from the profile provider's ad server, or even the actual TV ad; (2) an indicator of information about the user (likely not PII), such as (a) an IP address pointing to the user, preferably with time and date of visits; (b) a description of profile information about the user, or (c) a code or keyword used by the profile provider to fetch a visitor's profile from a database; or (3) an indicator describing user activity, such as a code or keyword indicating (a) certain categories of users, such as users likely interested in mortgages or users likely interested in travel, etc., or (b) more simply, what the visitor searched for on the online site, such as "car insurance." The electronic communication can be sent for each instance of a user interacting with the online site, or a list can be created and transmitted containing information about a number of user contacts. The electronic communication can include any combination of items 1-3 above; for example, a list of visitor IP addresses (preferably with date/time of visits) can be usefully paired with an indicator, in the form of a URL or code, identifying specific TV ads that the profile provider would like to deliver to each of the listed visitors.

Once requested, the television advertisement can be transmitted to the user's STB in a variety of ways. The advertisement can be previously stored on the CAS and transmitted directly from the CAS to the user's STB (FIG. **6**A). The advertisement stored on the CAS can be transmitted from the accessed online site, from another online site, or from another ad server and stored on the CAS as part of the transmission request from the accessed online site, and then transmitted to the user's STB. The advertisement can be transmitted directly to the user's STB from the accessed online site (FIG. **6**B) or from another online site or ad server **60** (FIG. **6**C). The user's STB can be instructed by the CAS to retrieve the advertisement directly from the accessed site, from the CAS, from another online site, or from another ad server, using for example the URL given to the CAS by the profile provider. In any of those alternatives, the television advertisement need not be transmitted directly to the STB; instead it can be transmitted through one or more intermediate servers (i.e., a server hosted by an ISP, cable company, or telecommunications company, for example). The television advertisement can be streamed or otherwise delivered in real time, or it can be delivered to the user's STB or an associated DVR for later viewing.

As IP address are dynamically assigned and reassigned, ISP/TVP **20** reports updated online access and STB IP addresses to CAS **40** (as in FIG. **2**). The IP addresses and their associated pseudonyms can be transmitted to the CAS **40** immediately upon allocation or reallocation by ISP/TV **20**, or can be transmitted periodically to CAS **40** at any necessary or desirable time interval (fixed or variable). Although assignment of a pseudonym associated with both the online access IP address and the STB IP address can facilitate delivery of television ads to STB **36** based on the user's online behavior (via modem **32**), it is not necessary. All that is required is an association between the online access IP address and the STB IP address to enable delivery of television ads based on the user's online activities without relying on PII.

In another exemplary system for serving targeted television advertisements based on a user's online behavior, the user need not receive both television service and Internet access from a common service provider. The basic layout for such a system is illustrated schematically in FIG. **7**, with modem **32** connected to Internet service provider (ISP) **22** for providing online access, and STB **36** connected to television provider (TVP) **24** for providing television service. Again, modem **32** and computer **34** are described as examples of online access and interface devices, respectively; the use of these specific examples shall not be construed as limiting the scope of the present disclosure or appended claims. An online access IP address is assigned to modem **32** as described above. In cases where the user's STB **36** can also obtain online access via the same IP address as the user's online access (i.e., via modem **32**), that common IP address comprises the electronic association that can be used to perform targeted television advertising without requiring PII. That case can occur by connecting STB **36** to the user's modem **32** via connection **35**, in addition to connecting STB **36** to TVP **24**. For example, STB **36** can be connected to a local area network (LAN) that shares device **32** for online access. In such an arrangement, network traffic is routed to a common IP address (i.e., the IP address of modem **32**) for STB **36** and other devices connected to the LAN. The user can receive online access from any online service provider via any suitable modem **32** (for cable, DSL, wireless, satellite, or any

other transmission system) or other suitable online access device and can receive television service from any suitable television service provider through STB **36**. The term "common IP address" denotes the IP address of a modem or other online access device to which remote network traffic is routed for each of multiple devices sharing a common connection to the remote network through that modem, e.g., the IP address of a modem connecting to the Internet a router in a local area network (LAN) would constitute the common IP address for multiple devices connected to the LAN for online access, even though those multiple devices typically also have individual IP addresses assigned by the router for routing traffic within the LAN. An online site or server accessed by any one of the multiple devices only "sees" the common IP address (the modem IP address).

In an exemplary implementation, a user's STB **36** can periodically contact a CAS **40** (or multiple CASs) via the IP address of the user's modem **32** that is common to STB **36** (as in FIG. **8**). The common IP address is dynamically assigned by ISP **22** to the user's modem **32** or other online access equipment. Modem **32** can include a router to route network traffic properly among the user's computer (or computers or other devices) **34** and the user's STB **36**. Alternatively, a separate router can be employed, or computer **34** or STB **36** or television **38** can include routing functions, for properly routing network traffic passing through modem **32**, with STB **36** providing routing functions or being connected to the separate router, to computer **34**, or to television **38** as appropriate. STB **36** reports the common IP address to CAS **40** with which it is in contact. However, STB **36** itself might not know the common IP address it is using, because it communicates through modem **32**. In such circumstances, STB **36** nevertheless can report the common IP address to CAS **40** simply by initiating communication through modem **32** to CAS **40**, thereby enabling CAS **40** to extract the common IP address from the communication. The common IP address enables delivery of television ads to STB **36** based on access of an online site via the common IP address (or based on other user profile information derived from online activity observed as originating from the online access IP address of modem **32**, i.e., from the common IP address). The existence of the common IP address associates the online access IP address and the set-top box IP address. Again, this does not constitute PII. The time interval for the periodic contact of the STB and the CAS can be set to any appropriate time period, e.g., every five minutes, every hour, or at some other necessary or desirable time interval. The time interval can be selected to be commensurate with a typical or average time interval for dynamic reassignment of the online access IP address by the user's Internet Service Provider. The selected time interval can be made adjustable if needed or desired. Alternatively or additionally, the contact between the STB and the CAS may not be set to occur at a fixed time interval but rather irregularly, such as instances where it is triggered by dynamic reassignment of the online access IP address by the ISP.

When a user engages in online activity (for example, accessing online site **50**, as in FIG. **9**), user profile information derived from the user's online activity from the online access IP address can be delivered electronically to CAS **40** (from the accessed site **50** as in FIG. **10**, or from another profile provider), which in turn can cause a targeted television advertisement to be directed to the user's STB, if there is an STB IP address associated with the online access IP address. In the example shown in FIG. **9**, online site **50** acts as a profile provider, and the user's online access IP address (the common IP address), from which the online site was accessed by the user, is included with the electronic delivery. CAS **40** causes the television advertisement to be directed to STB **36** at the common IP address (as in FIGS. **11**A-**11**C), in accordance with the alternative methods for delivery of the TV ad discussed herein in connection with FIGS. **6**A-**6**C. The particular television advertisement thus transmitted typically is selected for delivery to the user's STB **36** based on the user's online behavior (examples of various sorts of online behavior, or demographic information provided or determined online, are discussed above). The accessed online site **50** transmitting the electronic communication (examples of which are listed above) can be any profile provider, or any profile provider having access to information about user activity with respect to online site **50** can transmit the electronic communication (examples of alternative types of profile providers are also given above).

The television ad can be directed to the STB that most recently reported to CAS **40** as the common IP address the online access IP address from which online site **50** was accessed. In that case, the IP addresses can already be associated when the user profile information is used or the association can be created when the user profile is received or afterwards. Or the television ad can be directed to the STB that next reports that IP address to CAS **40** as the common IP address. In that case, the IP addresses might not be associated until the STB and CAS **40** are next in communication with each other and the STB IP address is received by CAS **40**. Associations between STBs and online access IP addresses could be stored for future usage or could be created in real-time when a STB communicates with a CAS to receive TV ads and not stored for future usage (i.e., the association is dropped as soon as the TV ads are delivered to the STB). If the periodic contact interval is sufficiently small relative to the typical or average time interval between reallocation of IP addresses, then it is likely that those two IP addresses will be the same and that the television ad will be directed to the correct STB. There will be a small fraction of television ads that are misdirected, if the online access IP address is reassigned between the accessing of the online site (i.e., deriving the user profile information) and the relied-upon contact between the user's STB and the CAS (i.e., associating the IP addresses). That fraction can be reduced by reducing the periodic time interval between STB reports of its common IP address to the CAS or configuring the STB to report changes to the common IP address (i.e., to enable updating of the association between the IP addresses). Associations between online access and STB IP addresses can be stored for future use, or the IP addresses can be associated in real-time only when an STB communicates with a CAS to receive TV ads and not stored for future use (e.g, the association can be purged upon directing the TV ads to the STB).

Instead of relying on or waiting for contact from the STB reporting its common IP address to one or more CASs, the online site accessed by the user could instead query one or more CASs to find an STB with a common IP address matching the online access IP address from which the online site was accessed. If a matching STB IP address is found, a request is transmitted to the corresponding CAS to transmit a television advertisement to the STB. If the query, match, and request are completed sufficiently quickly, then the probability can be kept low that a television ad will be directed to the wrong STB.

In another exemplary implementation, the user's STB **36** can be assigned an identifier, which need not include PII. Such an identifier can be permanently or temporarily assigned to STB **36**. Examples of such identifiers could include an equipment serial number or a portion thereof, a device MAC address or a portion thereof, a username, a

pseudonym, a confirmation number, a tag, or any other identifying code or data element. The CAS can place an identifier on the STB the first time it is in contact with the STB and read or amend the identifier every time afterwards the STB and the CAS are in contact. Such an identifier is an analogy of a "cookie" used by online servers to recognize visitors' computers. The identifier can include the IP address the STB is using when in contact with the CAS, so the next time the CAS and the STB are in contact, the CAS could compare the IP address then used by the STB with the previous IP address used by the STB without looking in a database. From a privacy perspective, there is an advantage to using an identifier placed by the CAS on the STB, because it enables the user to control the identifier from user's TV screen and set privacy settings to match user preference. A user may, for example, erase the identifier, alter the identifier to inform the CAS the next time it is in communication with the STB that the user is not interested in targeted ads, interested only in ads targeting online behavior from the last seven days, interested in ads in certain categories only, or interested in all types of ads except for certain excluded categories (e.g., adult content). In addition to reporting the common IP address to CAS **40**, STB **36** can also report the identifier. When an online site **50** is accessed from the common IP address, online site **50** requests that a television advertisement be transmitted to the STB having the common IP address. The identifier of the STB most recently reporting the common IP address before the request is compared to the identifier of the STB that next reports that IP address to CAS **40** after the request. If the compared identifiers match, then it is nearly certain that the STB corresponds to the same user online access IP address from which online site **50** was accessed and the television advertisement is correctly directed. If a unique identifier is used (such as a complete MAC address or a complete device serial number) then misdirecting the television ad is virtually impossible. Even if the identifier is not unique (e.g., a partial MAC address or serial number, or a simple four-digit number), it is still highly unlikely that a given IP address would be reallocated between STB's that happen to have the same identifier. Use of an identifier can enable accurate directing of television ads to the correct STB while requiring the STB to report its IP address to the CAS less frequently, reducing network traffic and other resource requirements.

In another exemplary implementation, instead of reporting the common IP address of STB **36** to CAS **40** relatively frequently, STB **36** can be configured to store its common IP addresses and corresponding times and dates that each of the addresses is assigned to modem **32** (and hence also to the LAN to which the STB **36** is connected). The common IP address can be periodically sampled and the sampling stored (e.g., every 1, 5, or 10 minutes, or some other suitable interval), or the specific times and dates of IP address reassignments can be stored with the corresponding IP addresses. STB **36** can be configured to periodically (e.g., every 4, 6, 12, or 24 hours, or some other suitable time interval) report to CAS **40** all of the common IP addresses assigned to modem **32** and the corresponding dates and times they were used for some preceding span of time (e.g., 1, 7, 14, 30, or 90 days, or some other suitable interval). Alternatively, the common IP address can be stored on the STB as part of a cookie or tag set and subsequently read or reset by CAS **40**. CAS **40** also can be configured to receive IP addresses and corresponding access times and dates for all visitors to an online site **50** that wishes to deliver television advertisements based on online user behavior. Online site **50** periodically reports to CAS **40** (as in FIG. **10**) all IP addresses from which the online site was accessed during some preceding period, along with the corresponding times and dates. The frequency and time periods of the online site's reporting can be similar to those of the STB reporting, or they can differ substantially, as needed or desired. The two lists (one from the online site, one from the STB) of IP addresses are compared, and delivery of a television advertisement is requested if any matches are found, i.e., whenever it is found that the STB was connected to a modem that was assigned an IP address at a time and date when the online site was accessed from that IP address. Such cross-matching ensures accurate delivery of the television advertisement and requires substantially less communication between the STB and the CAS.

The common IP addresses (and corresponding times and dates) can be stored on the CAS. Alternatively, privacy can be enhanced in this implementation by storing the common IP addresses (and corresponding times and dates) locally on the STB, instead of on the CAS, so the only device that monitors the different IP addresses assigned to the same access device is the STB. If stored, whether on the STB, on the CAS, or elsewhere, the list of common IP addresses can be purged. Purging of the IP addresses can be done periodically, at any suitable time interval, and can be manual or automated. Similarly, the list of online access IP address (and corresponding times and dates) from which an online site has been access can be purged. The STB can be employed to set privacy options, thereby enabling the user to control at least partly if and how TV advertisements are targeted. For example, the user might choose whether or not, or for how long, the CAS or STB will record and retain the IP addresses assigned to the user's modem, or can choose to erase all presently stored IP address data.

Typically a router does not provide the IP address of the cable, DSL, or other modem to the computer(s) or device(s) connected to it or to a LAN managed by it. STB **36** requires this information to store it for later reporting to CAS **40**. One method for enabling this functionality includes providing an Internet server (perhaps as part of CAS **40**, or perhaps an independent server) that receives periodic requests from STB **36** and replies to STB **36** with the common IP address (i.e., the IP address of modem **32**, through which STB **36** is provided with online access). Any other method for monitoring the common IP address can be employed, including configuring the modem **32** to directly report its IP address to STB **36**. STB **36** periodically monitors the IP address of the modem **32** at a selected time interval (described above), and stores the modem IP address (i.e., the common IP address) and the corresponding times and dates each common IP address was allocated to the user's modem.

In any embodiment or implementation in which STB **36** reports IP address data to CAS **40** (either stored on STB **36** or for storage at CAS **40**), that communication can be achieved in several ways. STB **36** can report the common IP address through the online access modem **32**. Alternatively, STB **36** can report to CAS **40** through a dedicated upstream data channel **37** that is part of the television system (as in FIG. **12**). The reported IP address data need not be transmitted directly to CAS **40**; instead it can be transmitted to an intermediate server (e.g., hosted by an ISP, cable company, or telecom company).

It should be noted that some STBs have a dedicated modem and typically would not need to obtain online access through the user's online access modem to deliver television service to the user. However, other functionality of an STB includes, or is expected to include, delivery of audio, video, images, and other content from a user's computer **34** or other networked devices to the user's television **38**. To provide that functionality, STB **36** must be connected to the same LAN or router as

the user's computer(s), even if the STB has its own modem. Although using its own modem for most of its functions, such an STB would still have additional online access through the user's online access modem **32**, enabling the user's online access and STB to have a dynamically assigned common IP address (as described above). The STB can report the common online access IP address through the online access modem **32** at the common IP address or through the STB's dedicated modem at its own IP address. The television advertisement transmitted to the STB can be received through the online access modem **32** at the common IP address or can be received through the STB's dedicated modem at its own IP address (if, for example, the CAS is provided with the STB modem IP address along with the common IP address).

However the user's online access and STB IP addresses are electronically associated, the association can be maintained even if the online user interface device **34** is a mobile device (e.g., an Internet-enabled cell phone, handset, PDA, or laptop computer) that is intermittently disconnected from modem **32** and is connected to the Internet through another connection (e.g., another LAN, a wireless hotspot, or a cell phone network, as in FIG. **13** or **14**). When connected to the Internet through modem **32** (as in FIG. **1** or **7**), online sites visited using such a mobile device **34** can request delivery of television advertisements to STB **36** in any of the ways described above. Mobile device **34** can be programmed to store, in much the same manner as described above for STB **36**, its online access IP addresses and the corresponding dates and times when disconnected from modem **32** and connected to the Internet by another connection (i.e., when "roaming"). When mobile device **34** is later reconnected to modem **32**, those stored roaming online access IP addresses, along with the corresponding dates and times, can be transmitted to CAS **40** as described previously. Television advertisements can be directed to STB **36** based on matches found between the roaming online access IP addresses (and dates and times) from mobile device **34** and online access IP addresses (and dates and times) reported by online site **50** to CAS **40** for visits to online site **50**.

Furthermore, the selected television advertisements can be directed to STB **36** even after a mobile device **34** is disconnected from modem **32** and begins accessing the Internet through roaming online access IP addresses. A tag or cookie placed on mobile device **34** (or stored in a database elsewhere, such as on CAS **40**, by CAS **40**, or somewhere accessible on STB **36** or its associated LAN), which tag or cookie can include online access IP addresses (and corresponding dates and times) of modem **32** or STB **36**. Those IP addresses (and dates and times) can be reported to CAS **40** by mobile device **34** while roaming (following a redirect from visited online site **50** for example), and a television advertisement can be directed to STB **36** (using the IP address reported by the roaming mobile device **34**) at the request of online site **50**. Because a new IP address might be assigned to modem **32** and STB **36** after roaming device **34** is disconnected from modem **32**, an identifier for STB **36** (as described earlier) can be employed to verify that the television advertisement is directed to the correct STB. The identifier can be stored on mobile device **34** as part of the cookie or tag.

However the user's online access and STB IP addresses are electronically associated, the STB can be configured to filter the targeted television advertisements based on user preferences. For example, a user might program the STB to reject certain ad categories (e.g., women's clothing, or health ads) and accept certain other ad categories (e.g., automobile ads, electronic equipment ads, or travel ads). The filtering can be configured as "opt in" (i.e., receive ads only in selected categories) or "opt out" (i.e., receive ads in all but selected categories). In another example, a user might filter ads based on how long ago an online site was visited; e.g., the user might choose to accept ads only from Internet sites visited in the last seven days. Such filtering or preference data can be applied before or after an ad is selected to be transmitted. The STB can be configured to notify the CAS or the online site to prevent selection, or transmission, of the television advertisement, or the STB can accept the advertisement but then not display it to the user. In an exemplary implementation, such user preference or filtering information can be stored in the STB as part of a cookie or tag set and subsequently read or amended by the CAS. User preference or filtering information can be stored in any suitable location or format.

In another implementation, no software is required to be installed on the mobile device, only cookies are placed on the device, which makes implementation in the market much simpler. Once a STB is confirmed to have been using a certain IP address at a certain date and time (for example by having a uniquely tagged STB consecutively communicate with the CAS using the same IP address or by the STB reporting the common IP address recorded by it as used by the online access device), the CAS database can be searched to find all the computers, mobile devices, and other STBs that used the same IP address at the same date and time, and those will be assumed to be devices that are part of the same household and using the same LAN. Then, an association or link is created among the devices, by linking the device identifiers or tags with the STB's identifier in the CAS database or by placing linking codes or information identifying the linked devices within the identifiers (cookies) of each of the devices along with the date and time the association was created. The association is kept for no more then a pre-determined period of time (such as seven days), to ensure that the delivered TV ads will be based only on online activity of those people that live in the house and not on online activity of people that happened to use the house's LAN only once, such as houseguests.

Once the association is created, profile information (both behavioral and demographic) collected about the computers and mobile devices before and after the association was created could be used to target ads to the STB, regardless of the IP addresses used by the computers and mobile devices (such as cell phones) to access the web at the time the profiles were collected.

For example, consider a common scenario where a laptop, used both at home and in the office, is linked to a home STB as a result of it being used at home. The day after the association was created, the laptop is taken to work, where it is used to visit a home mortgage site (using a different LAN or online access device than the one used at home). The home mortgage site redirects the laptop to the CAS along with a request to transmit a mortgage-related TV ad from one of the site's advertisers to the laptop user. The CAS, reading its own cookie that was placed on the laptop, checks its database and finds that the laptop is linked to a certain STB. In the evening, when the laptop user returns home and turns on the TV, the user will see the mortgage-related TV ad, even if the user left the laptop at work that day.

In another example, suppose a laptop user using a laptop at work one morning views a home mortgage advertiser's ad, before any association between the laptop and a home STB is created. When the mortgage advertiser ad server redirects the laptop to the CAS with a request to transmit a TV advertisement to the user, the CAS places a cookie on the laptop, or reads its own cookie if it encountered the laptop before. The CAS, finding no association between the laptop and a STB, stores the IP address used to view the advertiser's online ad,

the CAS cookie used to mark the laptop, the date and time the ad was viewed, and a link (e.g., a URL) to the advertiser's TV ad. In the afternoon, suppose the laptop user returns home with the laptop. When the user accesses the Internet via the home's LAN with the laptop, suppose the user visits a travel site interested in delivering travel-related TV ads to the user from the site's advertisers. When the travel site redirects the laptop to the CAS, the CAS reads its own cookie and records the IP address used by the laptop to access the travel site, the CAS cookie used to mark the laptop, the date and time the site was visited, and links to TV ads (sold by the site to its travel advertisers). Next, the home STB is in contact with the CAS in the evening to check whether there are any TV ads available for its user. The CAS then uniquely identifies the STB using a tag it previously placed on the STB and recognizes that the STB is using the same IP address as the STB did several days ago. The CAS checks which profile providers were visited by computers and mobile devices using the same IP address since the STB's last contact. The CAS finds the laptop visit to the travel site using the common IP address. The CAS further finds the laptop's view of the online mortgage advertiser's ad, using the cookie used by the CAS to mark the laptop. The CAS can then redirect the STB to fetch the mortgage TV ad, using the link provided by the mortgage advertiser (despite the fact that the online mortgage ad was viewed by the laptop before making the association with the home STB) and redirect the STB to fetch the travel TV ads from the links provided by the travel site.

An Internet site can determine in one of several ways which CAS to contact to arrange for targeted delivery of television advertisements to a visitor of the online site:

(i) Each ISP (or ISP/TVP) has a block of IP addresses from which it dynamically allocates IP addresses to users using DHCP. Based on the online access IP address of a visitor to the site, an Internet site can determine which ISP the visitor is using to access the site. The site can then transmit a request to the correct CAS for that ISP. The request could be transmitted by redirecting the user to the correct CAS, for example.

(ii) The CAS or the CAS owner can transmit to participating Internet sites a file that includes a list of online access IP addresses that the CAS currently recognizes. Updated files can be transmitted at suitable intervals. An Internet site can receive such files from multiple CASs, and according to the information in the files can determine the proper CAS from which to request that an ad be served to the Internet site visitor.

(iii) The Internet site can request ads from all or most major CASs, relying on the probability that at least one of them may have registered the IP address allocated to the site visitor by the ISP that provides the site visitor's online access. If that is the case, that CAS can transmit to the Internet site a confirmation that the CAS recognizes the site visitor's online access IP address. The Internet site can deliver its request by redirecting a visitor to all or most major ISPs that operate a CAS, for example, or by sending all or most of the major CAS servers a file with the IP addresses and corresponding times and dates of visitors to the site.

The CAS that receives a request to deliver a television ad to an Internet site visitor might already have electronically associated an STB IP address with the visitor's online access IP address. If not, the CAS can store the site visitor's online IP address, the identity of the requesting Internet site, and the time and date of the visit to the Internet site. If the site visitor's STB later accesses the Internet server and the ISP/TVP transmits the site visitor's STB IP address to the CAS, the CAS can then arrange delivery of requested television ads. Or if the site visitor's STB reports a common IP address that matches the site visitor's IP address, the CAS can then arrange delivery of requested television ads.

Although the CAS is described as an entity separate from the profile provider, it could well be owned by or otherwise controlled by the profile provider. For example, if a profile provider is an online site (a large site such as Google could be a good example), in that implementation no redirect (or other inter-party communication) to the CAS will be required because the CAS is the server collecting the profile on behalf of the online site. For example, Google's CAS could collect the IP addresses of users who search on Google, what those users search for, at what times and dates the searches took place, and possibly the Google cookies used to mark those users' computers. Due to the very large amount of profile information about so many people accumulated by Google, the Google CAS could be used to serve TV ads to STBs. An STB communicates with the Google CAS to check whether a STB user has used another computer or mobile device to search on Google (the Google CAS uses the STB's common IP address to find those other computers or mobile devices, as explained above), and if Google finds such searches were made, it arranges for delivery of targeted TV ads, sold by Google to its advertisers, to the STB of users who made such searches.

As a security precaution, many residential or home office network routers are set by default to block access from the Internet to devices connected to router. In this default mode, television advertisements can be transmitted to the STB through the modem/router only upon if an initiated request is transmitted by the STB. The STB can be configured to query the CAS periodically for television ads awaiting transmission to the STB, and in response the CAS can either transmit the ad or direct the STB to retrieve the ad from the accessed online site or from another online site or ad server. Alternatively, enabling "Port Forwarding" on the router would allow direct access from the Internet to a STB connected to the Internet through the modem/router, thereby enabling the CAS or online site to transmit, at its own initiative, an advertisement to the STB.

However the transmission of the advertisement is initiated, and whatever the source of the transmitted advertisement, the STB can save the advertisement (in its own memory or storage or in a DVR) for viewing at a later time by the user (perhaps repeatedly), or the advertisement can be presented in "real-time" or "streaming" format. The advertisement (stored or real-time) can be presented independently, or can be integrated into other television content. Any suitable procedures for transmitting the targeted television advertisement to the online user's STB can be employed.

An online site or other profile provider can provide to the CAS a profile of a visitor, in return for a fixed payment or a commission based on revenue generated by a television advertisement transmitted to the profiled visitor. In such a case the transmission request received by the CAS from the profile provider includes the visitor's profile (searches performed, pages viewed, provided demographic attributes, etc.; typically not PII). The CAS can match the profile with one or more other television advertisements to be delivered to the visitor's STB (in addition to those requested by the online site). Such additional ads can be sold by the CAS or by another party, and can be transmitted directly from the CAS or pulled by the STB from another site or ad server to which the CAS redirects the STB.

As described previously herein, it is often the case that more than one computer or other online user interface device is connected to the Internet through a single modem or router,

and all devices sharing that connection will appear to an online site to be connected through the same IP address at any given time. For example, in a home scenario, a parent and a child in the same household might each use their own computer to access the Internet, with the parent visiting sites pertaining to news or finance and the child visiting sites pertaining to pop music or television. (The same is true in a business setting, where many computers may access websites through a common modem or router.) Each such site visited by any person on the LAN reports to the CAS the IP addresses and corresponding times and dates of each of those visits (which are the same at any given time for both computers). The STB in the same household reports to the CAS the common IP address used for online access. The CAS can now match the STB to the various sites visited. Television advertisements can be selected based not only on requests made by the visited sites (as already described) but also on content being viewed on the television when the TV advertisement is delivered. For example, if programming is being viewed on the television that is typically targeted at adults (e.g., news, financial reports, or adult drama) then television advertisements requested by the news or finance online sites are presented. Alternatively, if programming is being viewed on the television that is more typically targeted at children or teenagers, then television advertisements requested by the pop music or fashion online sites are presented. Both types of ads can be directed to the STB and stored for later viewing (during viewing of suitable television content) or can be directed to the STB and viewed as the suitable television content is viewed. The same discrimination between types of sites visited using multiple online access devices can be employed regardless of whether the computers in the household are fixed or mobile devices, through the techniques discussed previously herein.

In another implementation, the CAS arranges for delivery of TV ads to the STB along with associated television program targeting criteria, such as targeted age (kid, teen, adult, or senior), targeted gender, or type of content (travel, finance, news, or other subjects). The STB chooses the TV program within which to serve each of the delivered ads based on comparing the television program targeting criteria to actual program characteristics. Program characteristics can be ascertained by virtue of their being included in the electronic TV guide available to the STB or sent with the program as accompanying embedded data, for example, using known or later-discovered techniques. In a variation, when the STB delivers a television program to the user, or when the television program is about ready to show an advertisement, the STB can connect with the CAS and report to the CAS the identity of the viewed program, and the CAS can respond with an instruction identifying which of the ads stored in the STB (previously delivered from the CAS to the STB) should be delivered during the viewed program, based on comparing the characteristics of the program being viewed with the targeting criteria.

The television advertisements directed to users' set-top boxes at the request of a profile provider can come from a variety of sources. In one example, a given profile provider can request that the CAS direct an advertisement to the user's STB from (or on behalf of) the profile provider itself (if, for example, the profile provider is an online advertiser site interested in delivering TV ads to people that visited its online site) or from (or on behalf of) a related site (perhaps a site in the same Internet domain as the given profile provider). In that example, the proprietor of the CAS, as the facilitator of the targeted TV ad delivery based on the online site visit, can receive a payment from the profile provider. The CAS proprietor can keep a share of revenue as a commission and pay the TVP for the ad space (except in the case where the CAS proprietor owns the ad space). The TVP can either retain the entire amount paid by the CAS proprietor, if the TVP owns the TV ad space within which the TV ad was delivered, or the TVP can pay some or all of the amount paid by the CAS proprietor to another entity such as a TV broadcasting network, if the TVP does not own the ad space. In the case where the STB is provided by a third party other than the TVP (such as a service provider like Tivo), the STB provider can arrange with content owners (such as a TV broadcasting network) to have the service provider's STBs replace broadcasted TV ads with targeted TV ads, where a targeted TV ad is available, and the service provider and the TV broadcasting network can share the revenue with the CAS proprietor as discussed above. In some cases, the CAS can be owned by a TVP, an ISP, an STB provider, an online site, a TV ad space owner, or a TV content provider, in which case the payments will be divided in accordance to the respective roles. In general, a payment from a TV advertiser is used to pay the TV ad space owner and the entities facilitating the delivery of the targeted TV ad.

In another example, the online site or other profile provider can request that an ad from another advertiser of its own choosing be directed to the user's STB to whom the online site has sold an amount of television advertising space. The online site generates a new revenue stream by selling TV ads to its advertisers, where the TV ads are delivered to members of the online site's audience while they watch TV. In that example the online site can collect a revenue amount from the site-chosen advertiser while paying the CAS, ISP, TVP, ISP/TVP, or TV ad space owner in return for assisting to facilitate delivery to the STB of the ad provided by the site-chosen advertiser.

In another example, the profile provider provides a profile to the CAS in return for a payment triggered (1) every time the provided profile (whether including behavioral or demographic data) is used to deliver a TV ad, (2) when a TV ad that has been delivered using the provided profile generates revenues, or (3) simply on account of delivery of the profile without regard to whether, how often, or how effectively it is used.

The TV advertisement itself can be sold by the CAS, ISP, TVP, ISP/TVP, STB provider, TV ad space owner, or any third party such as a re-seller or a firm that represents ad space owners or profile providers and sells to advertisers. In that example the profile provider can collect a revenue amount from any of the entities benefiting from the delivery of the TV ad based on the profile provided by the profile provider, including the TV ad space owner, STB provider, CAS, ISP, TVP, ISP/TVP, or a third party selling the targeted ad space. The profile provider, re-seller, or the other advertisers can also pay a revenue amount to the CAS, ISP, TVP, or ISP/TVP in return for directing the ad to the STB.

The systems and methods disclosed herein can be used to generate revenue in a variety of ways for various of the involved entities, not limited to the examples given here, that fall within the scope of the present disclosure or appended claims. It should be noted that the terms "pay," "collect," "receive," and so forth, when referring to revenue amounts, can denote actual exchanges of funds or can denote credits or debits to electronic accounts, especially automatic payment implemented with computer tracking. The terms can apply whether the payments are characterized as commissions, royalties, referral fees, holdbacks, overrides, purchase-resales, or any other compensation arrangements giving net results of split advertising revenues as stated above. Payment can occur either immediately, such as through micro-payment transfers,

periodically, such as daily, weekly, or monthly, or upon accumulation of payments from multiple events totaling above a threshold amount. The systems and methods disclosed herein can be implemented with any suitable accounting modules or subsystems for tracking such payments or receipts of funds.

The systems and methods disclosed herein can be implemented as general or special purpose computers or other programmable hardware devices programmed through software or as hardware or equipment "programmed" through hard wiring, or a combination of the two. Computer programs or other software, if used, can be implemented in temporary or permanent storage or in replaceable media, such as by including programming in microcode, object-oriented code, web-based or distributed software modules that operate together, RAM, ROM, CD-ROM, DVD-ROM, hard drives, thumb drives, flash memory, optical media, magnetic media, semiconductor media, or any future storage alternatives.

It is intended that equivalents of the disclosed exemplary embodiments and methods shall fall within the scope of the present disclosure and/or appended claims. It is intended that the disclosed exemplary embodiments and methods, and equivalents thereof, may be modified while remaining within the scope of the present disclosure or appended claims. For example, where the term "product" is used in connection with a shopping or purchase request, the product can be a physical product, intangible product, or a service.

For purposes of the present disclosure and appended claims, the conjunction "or" is to be construed inclusively (e.g., "a dog or a cat" would be interpreted as "a dog, or a cat, or both"; e.g., "a dog, a cat, or a mouse" would be interpreted as "a dog, or a cat, or a mouse, or any two, or all three"), unless: (i) it is explicitly stated otherwise, e.g., by use of "either . . . or," "only one of . . . ," or similar language; or (ii) two or more of the listed alternatives are mutually exclusive within the particular context, in which case "or" would encompass only those combinations involving non-mutually-exclusive alternatives. For purposes of the present disclosure or appended claims, the words "comprising," "including," and "having," and variants thereof, shall be construed as open ended terminology, with the same meaning as if the phrase "at least" were appended after each instance thereof.

What is claimed is:

1. A method implemented using a programmed hardware computer system, the method comprising:

(a) for each of a multitude of users, with the computer system, electronically associating an online access IP address of the user and a set-top box IP address of that user based on a common IP address, wherein network traffic is routed via the common IP address to both an online user interface device and a set-top box of that user; and

(b) using user profile information derived from online activity from a first online user interface device via a first one of the online access IP addresses of the multitude of users, with the computer system automatically causing a first television advertisement to be directed to a set-top box for presentation via that set-top box, selectively, wherein the set-top box is indicated by the set-top box IP address associated with the first online access IP address.

2. The method of claim **1** wherein neither the user profile information in part (b) nor the association between the first online access IP address and its associated set-top box IP address includes personally identifiable information.

3. The method of claim **1**:

(i) further comprising, using user profile information derived from online activity from a second online user interface device via a second one of the online access IP addresses of the multitude of users, with the computer system automatically causing a second television advertisement to be directed to a second set top box for presentation via that set-top box, selectively, wherein the second set-top box is indicated by the set-top box IP address associated with the second online access IP address,

(ii) wherein which television advertisement is directed to or presented via which set-top box depends on differences between the online activities from the first and second online user interface devices, respectively.

4. The method of claim **3** wherein neither the user profile information in part (i) nor the association between the second online access IP address and its associated set-top box IP address includes personally identifiable information.

5. The method of claim **1** further comprising storing in the computer system electronic associations between the online access IP addresses and the set-top box IP addresses.

6. The method of claim **1** wherein the online activity comprises requesting a search.

7. The method of claim **1** wherein the first television advertisement is caused to be directed to the set-top box upon first being contacted by the set-top box after the user profile information is derived.

8. The method of claim **1** wherein the first television advertisement is selected from among a plurality of possible television advertisements based at least in part on the user profile information derived from the online activity from the first online access IP address.

9. The method of claim **8** wherein the first television advertisement is selected based at least partly on demographic or behavioral attributes included in the user profile information.

10. The method of claim **1** wherein the first television advertisement is selected from among a plurality of possible television advertisements based at least in part on the television content viewed at the time the first television advertisement is to be presented by the set-top box.

11. The method of claim **1** wherein the common IP address is an IP address dynamically assigned to a modem or router used by the user for online access and connected to the user's set-top box.

12. The method of claim **1** further comprising:

(i) receiving at the computer system an identifier corresponding to the set-top box of the user; and

(ii) with the computer system causing the television advertisement to be transmitted only if directed to the set-top box corresponding to the identifier.

13. The method of claim **1** wherein part (a) comprises the act of storing the common IP address, and further comprising updating the common IP address of the user.

14. The method of claim **1** wherein part (a) comprises the act of storing the common IP address, and further comprising periodically updating the common IP address of the user.

15. The method of claim **1** wherein:

(i) the user profile information in part (b) includes a list of online access IP addresses corresponding to specific online activities and times and dates corresponding to each of the online activities; and

(ii) the computer system causes the television advertisement to be directed to the set-top box of one of the users only if any of the listed online access IP addresses corresponding to the specific online activities and the corresponding dates and times of the online activities match the common IP address assigned to that user and the date and time corresponding thereto.

16. The method of claim 15 wherein part (a) comprises the act of storing the common IP address and dates and times corresponding thereto in the computer system, and further comprising, with the computer system, periodically updating (i) the common IP address and times and dates corresponding thereto or (ii) the list of online access IP addresses corresponding to specific online activities and time and dates corresponding to each of the online activities.

17. The method of claim 1 wherein the computer system is a central ad server and the first television advertisement is received at the central ad server and directed to the set-top box.

18. The method of claim 1 wherein part (b) comprises, with the computer system, directing instructions to a profile provider, to an online site, or to an independent ad server to direct the first television advertisement to the set-top box.

19. The method of claim 1 wherein part (b) comprises, with the computer system, directing instructions to the set-top box to retrieve the first television advertisement from a profile provider, from an online site, or from an independent ad server.

20. The method of claim 1 wherein the computer system causes the first television advertisement to be directed only in response to a request for advertisements originating from the user's set-top box.

21. The method of claim 1 wherein the computer system causes the first television advertisement to be directed without a request for advertisements originating from the user's set-top box.

22. The method of claim 1 wherein the online access IP address of each user is an IP address associated with a modem or router used by that user for online access.

23. The method of claim 1 wherein only advertisements satisfying criteria selected by each user are directed to the set-top box of that user.

24. The method of claim 1 further comprising receiving a revenue amount as a result of directing the advertisement.

25. The method of claim 1 further comprising paying a revenue amount to a profile provider as a result of using the user profile information in part (b).

26. A method implemented using computer equipment, the method comprising:

(a) with the computer equipment, automatically electronically delivering electronic user profile information to a computer system that includes a server that electronically associates, for each of a multitude of users, an online access IP address of the user and a set-top box IP address of that user based on a common IP address,

(b) wherein network traffic is routed via the common IP address for both an online user interface device and a set-top box of that user,

(c) wherein delivered user profile information of a first user of the multitude of users (i) is derived from online activity of the first user from a first online user interface device via a first online access IP address and (ii) includes identification of the first online access IP address and the time and date of the online activity, and

(d) as a result of which delivery, a first television advertisement can be directed to a set-top box for presentation via that set-top box, selectively, wherein the set-top box is indicated by the set-top box IP address that the server associates with the first online access IP address.

27. The method of claim 26 wherein neither the user profile information delivered in part (a) nor the association between the first online access IP address and its associated set-top box IP address includes personally identifiable information.

28. The method of claim 26:

(e) wherein delivered user profile information of a second user of the multitude of users (i) is derived from online activity of the second user from a second online user interface device via a second online access IP address and (ii) includes identification of the second online access IP address and the time and date of the online activity,

(f) as a result of which delivery, a second television advertisement, different from the first television advertisement, is directed to a second set-top box for presentation via that set-top box, selectively, wherein the second set-top box is indicated by the set-top box IP address that the server associates with the second online access IP address, for selective presentation via that set-top box, and

(g) wherein which television advertisement is directed to or presented via which set-top box depends on differences between the online activities from the first and second online user interface devices, respectively.

29. The method of claim 26 further comprising receiving a revenue amount from a proprietor of the computer system as a result of the electronic delivering act.

30. The method of claim 26 further comprising receiving a revenue amount as a result of the electronic delivering act, wherein the revenue amount is received in response to each instance in which revenue is generated as a result of presenting the selected television advertisement via the set-top box indicated by the set-top box IP address associated with the first online access IP address.

31. The method of claim 26 further comprising, with the computer equipment, automatically selecting the first television advertisement based on the user profile information.

32. The method of claim 31 wherein the first television advertisement is selected based at least partly on demographic or behavioral attributes included in the derived user profile information.

33. The method of claim 26 further comprising receiving a revenue amount from a provider of the television advertisement as a result of electronically delivering the user profile information.

34. The method of claim 26 further comprising automatically receiving a revenue amount as a result of direction of the first television advertisement.

35. The method of claim 26 further comprising, with the computer equipment, electronically delivering the first television advertisement to the computer system for subsequent direction to the set-top box.

36. The method of claim 26 further comprising, with the computer equipment, directing the television advertisement to the set-top box in response to instructions received from the computer system.

37. The method of claim 26 wherein the step of delivering user profile information comprises delivering the first user online access IP address.

38. A method implemented using computer equipment, the method comprising:

(a) with the computer equipment, automatically electronically delivering electronic user profile information to a computer system that includes a server that electronically associates, for each of a multitude of users, an online user interface device identifier, which indicates an online user interface device of the user, and a set top box identifier, which indicates a set-top box of that user, which electronic association is based on a common IP address,

(b) wherein network traffic is routed via the common IP address for both the online user interface device and the set-top box of that user,

(c) wherein delivered user profile information of a first user of the multitude of users (i) is derived from online activity of the first user from the first user's online user interface device via a first online access IP address and (ii) includes identification of the first online IP address and the time and date of the online activity, and

(d) as a result of which delivery, a first television advertisement can be directed to a set-top box for presentation via that set-top box, selectively, wherein the set-top box is indicated by the set-top box identifier that the server associates with the online user interface device identifier of a first user's online user interface device.

39. The method of claim **38** further comprising, with the computer equipment, automatically selecting the first television advertisement based on the user profile information.

40. The method of claim **39** wherein (i) the step of delivering electronic user profile information derived from the online activity comprises, with the computer equipment, delivering the first user online access IP address; and (ii) the selection of a television advertisement is based on user profile information that is not delivered to the computer system.

41. The method of claim **38** wherein the step of delivering electronic user profile information derived from the online activity comprises, with the computer equipment, redirecting the first user's online user interface device during the first user's accessing of an online site via the first online access IP address.

42. The method of claim **38** further comprising automatically receiving a revenue amount as a result of direction of the first television advertisement.

43. The method of claim **42** wherein the revenue amount is received in response to each instance in which revenue is generated as a result of displaying the selected television advertisement via the set-top box indicated by the set-top box identifier associated with the online user interface device identifier of the first user's online user interface device.

44. The method of claim **1** wherein the first online access IP address and the common IP address are the same.

45. The method of claim **1** wherein the first online access IP address and the common IP address differ.

46. The method of claim **45** wherein the first online access IP address and the set-top box IP address are associated based on online access by the first user's online user interface device via a second online access IP address.

47. The method of claim **46** wherein the second online access IP address and the common IP address are the same.

48. The method of claim **45** wherein the first online access IP address and the set-top box IP address are associated based on a correlation between the common IP address and an online user interface device identifier that indicates the user's online user interface device.

49. The method of claim **48** wherein the online user interface device identifier includes a cookie.

50. The method of claim **48** wherein the online user interface device identifier includes a tag.

51. The method of claim **1** wherein the set-top box is further indicated by a set-top box identifier that includes a device serial number or a portion thereof.

52. The method of claim **1** wherein the set-top box is further indicated by a set-top box identifier that includes a device MAC address or a portion thereof.

53. The method of claim **1** wherein the set-top box is further indicated by a set-top box identifier that includes a username, a pseudonym, or a confirmation number.

54. The method of claim **1** wherein the common IP address is determined by the computer system by matching the first online access IP address with a set-top box IP address used by a uniquely identified set-top box both before and after the online activity occurs.

55. The method of claim **1** wherein the first online access IP address and the set-top box IP address are associated before the online activity occurs.

56. The method of claim **1** wherein the first online access IP address and the set-top box IP address are not associated until after the online activity occurs.

57. The method of claim **1** further comprising, with the computer system, automatically deriving the user profile information from the online activity performed from the first online access IP address.

58. The method of claim **1** further comprising, with the computer system, automatically selecting the first television advertisement based on the user profile information.

59. The method of claim **1** wherein:

(i) the computer system is under control of an entity that operates independently of a provider of television service to each of the multitude of users through the corresponding set-top box; and

(ii) the computer system causes the first television advertisement to be directed in part (b) without transmitting user online behavioral profile information to the provider of television service.

60. The method of claim **59** wherein the online access and set-top box IP addresses are associated in part (a), and the first television advertisement is caused to be directed in part (b), without receiving personally identifiable information from the provider of television service.

61. A method implemented using a programmed hardware computer system, the method comprising:

(a) for each of a multitude of users, with the computer system, electronically associating an online user interface device identifier, which indicates an online user interface device of the user, and a set-top box identifier, which indicates a set-top box of that user, which electronic association is based on a common IP address, wherein network traffic is routed via the common IP address to both the online user interface device and the set-top box of that user; and

(b) using user profile information derived from online activity from the online user interface device of a first user of the multitude of users via a first online access IP address, with the computer system automatically causing a first television advertisement to be directed to a set-top box for presentation via that set-top box, selectively, wherein the set-top box is indicated by the set-top box identifier associated with the online user interface device identifier of the first user's online user interface device.

62. The method of claim **61** wherein the first online access IP address and the common IP address are the same.

63. The method of claim **61** wherein the first online access IP address and the common IP address differ.

64. The method of claim **63** wherein the online user interface device identifier and the set-top box identifier are associated based on online access by the first user's online user interface device via a second online access IP address.

65. The method of claim **64** wherein the second online access IP address and the common IP address are the same.

66. The method of claim **61** wherein the online user interface device identifier includes a cookie.

67. The method of claim **61** wherein the set-top box identifier includes a device serial number or a portion thereof.

68. The method of claim **61** wherein the set-top box identifier includes a device MAC address or a portion thereof.

69. The method of claim **61** wherein the set-top box identifier includes a username, a pseudonym, or a confirmation number.

70. The method of claim **61** wherein the online user interface device identifier includes a tag.

71. The method of claim **61** wherein the online user interface device identifier includes the first online access IP address.

72. The method of claim **61** wherein the set-top box identifier includes the common IP address.

73. The method of claim **61** wherein the set-top box identifier includes at least a portion of the common IP address.

74. The method of claim **61** wherein the set-top box identifier includes a set-top box IP address.

75. The method of claim **61** wherein the common IP address is determined by matching the first online access IP address with a set-top box IP address used by a uniquely identified set-top box both before and after the online activity occurs.

76. The method of claim **61** wherein the online user interface device identifier and the set-top box identifier are associated before the online activity occurs.

77. The method of claim **61** wherein the online user interface device identifier and the set-top box identifier are not associated until after the online activity occurs.

78. The method of claim **61** further comprising, with the computer system, automatically deriving the user profile information from the online activity performed from the first online access IP address.

79. The method of claim **61** further comprising automatically selecting the first television advertisement based on the user profile information.

80. The method of claim **61** wherein neither the user profile information in part (b) nor the association between the online user interface device identifier and the set-top box identifier includes personally identifiable information.

81. The method of claim **61** wherein:

(i) the computer system is controlled by an entity that operates independently of a provider of television service to each of the multitude of users through the corresponding set-top box; and

(ii) the computer system causes the first television advertisement to be directed in part (b) without transmitting user online behavioral profile information to the provider of television service.

82. The method of claim **81** wherein the online user interface device identifier and the set-top box identifier are associated in part (a), and the first television advertisement is caused to be directed in part (b), without receiving personally identifiable information from the provider of television service.

83. The method of claim **61**:

(i) further comprising, using user profile information derived from online activity from the online user interface device of a second user of the multitude of users via a second online access IP address, with the computer system, automatically causing a second television advertisement to be directed to a second set-top box for presentation via that set-top box, selectively, wherein the second set-top box is indicated by the set-top box identifier associated with the online user interface device identifier of the second user's online user interface device, and

(ii) wherein which television advertisement is directed to or presented via which set-top box depends on differences between the online activities from the online user interface devices of the first and second users, respectively.

84. The method of claim **83** wherein neither the user profile information in part (i) nor the association between the second online user interface device identifier and its associated set-top box identifier includes personally identifiable information.

85. The method of claim **61** wherein the online activity comprises requesting a search.

86. The method of claim **61** wherein the first television advertisement is caused to be directed to the set-top box upon first being contacted by the set-top box after the user profile information is derived.

87. The method of claim **61** wherein the first television advertisement is selected from among a plurality of possible television advertisements based at least in part on the user profile information derived from the online activity from the first online access IP address.

88. The method of claim **87** wherein the first television advertisement is selected based at least partly on demographic or behavioral attributes included in the user profile information.

89. The method of claim **61** wherein the first television advertisement is selected from among a plurality of possible television advertisements based at least in part on the television content viewed at the time the first television advertisement is to be presented by the set-top box.

90. The method of claim **61** wherein the common IP address is an IP address dynamically assigned to a modem or router used by the user for online access and connected to the user's set-top box.

91. The method of claim **61** further comprising the computer system:

(i) receiving an identifier corresponding to the set-top box of the user; and

(ii) causing the television advertisement to be transmitted only if directed to the set-top box corresponding to the identifier.

92. The method of claim **61** wherein part (a) comprises the act of storing the common IP address, and further comprising updating the common IP address of the user.

93. The method of claim **92** wherein part (a) comprises the act of storing the common IP address in the computer system, and further comprising periodically updating the common IP address of the user.

94. The method of claim **61** wherein:

(i) the user profile information in part (b) includes a list of online access IP addresses corresponding to specific online activities and times and dates corresponding to each of the online activities; and

(ii) the computer system causes the television advertisement to be directed to the set-top box of one of the users only if any of the listed online access IP addresses corresponding to the specific online activities and the corresponding dates and times of the online activities match the common IP address assigned to that user and the date and time corresponding thereto.

95. The method of claim **94** wherein part (a) comprises the act of storing in the computer system the common IP address and dates and times corresponding thereto, and further comprising periodically updating (i) the common IP address and times and dates corresponding thereto or (ii) the list of online access IP addresses corresponding to specific online activities and time and dates corresponding to each of the online activities.

96. The method of claim **61** wherein the computer system is a central ad server and the first television advertisement is received at the central ad server and directed to the set-top box.

97. The method of claim **61** wherein part (b) comprises, with the computer system, directing instructions to a profile provider, to an online site, or to an independent ad server to direct the first television advertisement to the set-top box.

98. The method of claim **61** wherein part (b) comprises, with the computer system, directing instructions to the set-top box to retrieve the first television advertisement from a profile provider, from an online site, or from an independent ad server.

99. The method of claim **61** wherein the computer system causes the first television advertisement to be directed only in response to a request for advertisements originating from the user's set-top box.

100. The method of claim **61** wherein the computer system causes the first television advertisement to be directed without a request for advertisements originating from the user's set-top box.

101. The method of claim **61** wherein the online access IP address of each user is an IP address associated with a modem or router used by that user for online access.

102. The method of claim **61** wherein only advertisements satisfying criteria selected by each user are directed to the set-top box of that user.

103. The method of claim **61** further comprising receiving a revenue amount as a result of directing the advertisement.

104. The method of claim **61** further comprising paying a revenue amount to a profile provider as a result of using the user profile information in part (b).

105. The method of claim **26** wherein automatically electronically delivering comprises, with the computer equipment, redirecting the user's online user interface device to a server of the computer system.

106. The method of claim **26** wherein the first online access IP address and the common IP address are the same.

107. The method of claim **26** wherein the first online access IP address and the common IP address differ.

108. The method of claim **107** wherein the first online access IP address and the set-top box IP address are associated based on online access by the user's online user interface device via a second online access IP address.

109. The method of claim **108** wherein the second online access IP address and the common IP address are the same.

110. The method of claim **107** wherein the first online access IP address and the set-top box IP address are associated based on a correlation between the common IP address and an online user interface device identifier that indicates the user's online user interface device.

111. The method of claim **110** wherein the online user interface device identifier includes a cookie.

112. The method of claim **110** wherein the online user interface device identifier includes a tag.

113. The method of claim **110** wherein the set-top box is further indicated by a set-top box identifier that includes a device serial number or a portion thereof.

114. The method of claim **110** wherein the set-top box is further indicated by a set-top box identifier that includes a device MAC address or a portion thereof.

115. The method of claim **110** wherein the set-top box is further indicated by a set-top box identifier that includes a username, a pseudonym, or a confirmation number.

116. The method of claim **26** wherein the common IP address is determined by matching the first online access IP address with a set-top box IP address used by a uniquely identified set-top box both before and after the online activity occurs.

117. The method of claim **26** wherein the first online access IP address and the set-top box IP address are associated before the online activity occurs.

118. The method of claim **26** wherein the first online access IP address and the set-top box IP address are not associated until after the online activity occurs.

119. The method of claim **26** further comprising, with the computer equipment, automatically deriving the user profile information from the online activity from the first online access IP address.

120. The method of claim **31** wherein the first television advertisement is selected based at least partly on a specific search request, which request has originated from the first online user interface device.

121. The method of claim **34** wherein the revenue amount is received from an advertiser that has contracted to display a TV ad to persons who have characteristics contained in the user profile information.

122. The method of claim **121** further comprising, with the computer equipment, automatically selecting the first television advertisement based on the user profile information.

123. The method of claim **26** wherein:

(i) the computer equipment is controlled by an entity that operates independently of a provider of television service to each of the multitude of users through the corresponding set-top box; and

(ii) the computer equipment causes the first television advertisement to be directed in part (d) without transmitting or causing to be transmitted user online behavioral profile information to the provider of television service.

124. The method of claim **123** wherein the online access and set-top box IP addresses are associated in part (a), and the first television advertisement is caused to be directed in part (d), without receiving personally identifiable information from the provider of television service.

125. The method of claim **28** wherein neither the user profile information delivered in part (a) nor the association between the second online access IP address and its associated set-top box IP address includes personally identifiable information.

126. The method of claim **39** wherein the user profile information derived from the online activity comprises an indication of a search request originating from the online user interface device of the first user.

127. The method of claim **38** wherein automatically electronically delivering comprises, with the computer equipment, redirecting the user's online user interface device to the computer system.

128. The method of claim **38** wherein the first online access IP address and the common IP address are the same.

129. The method of claim **38** wherein the first online access IP address and the common IP address differ.

130. The method of claim **129** wherein the online user interface device identifier and the set-top box identifier are associated based on online access by the user's online user interface device via a second online access IP address.

131. The method of claim **130** wherein the second online access IP address and the common IP address are the same.

132. The method of claim **38** wherein the online user interface device identifier includes a cookie.

133. The method of claim **38** wherein the set-top box identifier includes a device serial number or a portion thereof.

134. The method of claim **38** wherein the set-top box identifier includes a device MAC address or a portion thereof.

135. The method of claim **38** wherein the set-top box identifier includes a username, a pseudonym, or a confirmation number.

136. The method of claim **38** wherein the online user interface device identifier includes a tag.

137. The method of claim **38** wherein the online user interface device identifier includes the first online access IP address.

138. The method of claim **38** wherein the set-top box identifier includes the common IP address.

139. The method of claim **38** wherein the set-top box identifier includes at least a portion of the common IP address.

140. The method of claim **38** wherein the set-top box identifier includes a set-top box IP address.

141. The method of claim **38** wherein the common IP address is determined by matching the first online access IP address with a set-top box IP address used by a uniquely identified set-top box both before and after the online activity occurs.

142. The method of claim **38** wherein the online user interface device identifier and the set-top box identifier are associated before the online activity occurs.

143. The method of claim **38** wherein the online user interface device identifier and the set-top box identifier are not associated until after the online activity occurs.

144. The method of claim **38** further comprising, with the computer equipment, automatically deriving the user profile information from the online activity performed from the first online access IP address.

145. The method of claim **39** wherein the user profile information derived from the online activity comprises demographic attributes collected through an Internet site accessed with the online user interface device of the first user.

146. The method of claim **42** wherein the revenue amount is received from an advertiser that has contracted to display a TV ad to an audience of an Internet site.

147. The method of claim **42** further comprising, with the computer equipment, automatically selecting the first television advertisement based on the user profile information.

148. The method of claim **38** wherein neither the user profile information delivered in part (a) nor the association between the online user interface device identifier and the set-top box identifier includes personally identifiable information.

149. The method of claim **38** wherein:

(i) the computer equipment is controlled by an entity that operates independently of a provider of television service to each of the multitude of users through the corresponding set-top box; and

(ii) the first television advertisement is directed in part (d) without transmitting user online behavioral profile information to the provider of television service.

150. The method of claim **149** wherein the online user interface device identifier and the set-top box identifier are associated in part (a), and the first television advertisement can be directed in part (d), without receiving personally identifiable information from the provider of television service.

151. The method of claim **38**:

(e) wherein delivered user profile information of a second user of the multitude of users (i) is derived from online activity of the second user from the second user's online user interface device via a second online access IP address and (ii) includes identification of the second online access IP address and the time and date of the online activity,

(f) as a result of which delivery, a second television advertisement, different from the first television advertisement, is directed to a second set-top box for presentation via that set-top box, selectively, wherein the second set-top box is indicated by the set-top box identifier that the server associates with the second online user interface device identifier of the second user's online user interface device, for selective presentation via that set-top box, and

(g) wherein which television advertisement is directed to or presented via which set-top box depends on differences between the online activities from the first and second online user interface devices, respectively.

152. The method of claim **151** wherein neither the user profile information delivered in part (a) nor the association between the second online user interface device identifier and its associated set-top box identifier includes personally identifiable information.

* * * * *