An Efficient Digital Modulation Scheme for Multimedia Transmission on the Cable Television Network

Krista S. Jacobsen* and John M. Cioffi
Information Systems Laboratory
Stanford University
Stanford, California 94305-4055

Abstract

We present a comparison between the performances of single-carrier modulation with equalization and multicarrier modulation on simulated cable television (CATV) channels. Simulations indicate that for a given data rate, the complexity of multicarrier is significantly lower than that of a single-carrier system. Furthermore, multicarrier is able to reduce the effects of various distortions on a CATV network, including microreflections and interference from external signals such as amateur radio, with a reasonable computational complexity while achieving information bit rates on the order of 80 Mbits/s.

Introduction

The feasibility of offering high-speed interactive data services to customers on CATV networks or similar broadband coaxial networks is currently being investigated by a number of service providers. With over 92% of the homes in the United States passed by cable, the CATV network is a potential supplier of these interactive data services. However, there are several electrical transmission problems that must be overcome before these services can be supplied reliably over CATV networks.

Presently, CATV networks are generally simplex broadcast tree- or star-structured networks. However, these networks can be converted for duplex service, as some already have been, by replacing amplifier/repeater segments with so-called "diplex" filters and amplifiers that separate the downstream frequencies (50-550 MHz) from upstream frequencies (5-40 MHz) for interactive transmission. Some CATV networks can also have high-frequency attenuation reduced by the installation of equalizing diplex amplifiers that can boost the usable spectrum to 1 GHz. Even after such installation, however, the network operator finds that only some channels are available for new digital services. Consequently, the deployment of digital services is likely to be incremental and to demand high spectral efficiency in those channels allocated for the new services.

The transmission of digital signals over the CATV network is complicated by two general effects. First, the hardware in CATV networks is not ideal. Taps, amplifiers, and splitters can all cause signals to be reflected at their insertion points. In particular, splitters in subscriber homes are known to have poor isolation characteristics. The effect of reflected signals on the frequency transfer characteristic of a CATV channel is passband ripple, which is known to cause "ghosting" in received analog signals. The effects of rippling on digital signals, however, are more severe. Variations in a channel's frequency response cause successively transmitted symbols to interfere with one another, an effect known as intersymbol interference (ISI). Depending on the absolute deviations of the channel magnitude response (which are determined by the magnitudes of impedance mismatches on a CATV system) and the frequency with which those deviations occur in the frequency response (which depends on the length of coaxial cable between mismatches), a given symbol could interfere significantly with a large number of adjacent symbols. Without some scheme to combat ISI, a receiver would make detection errors. In turn, the detection errors could disable, for example, a digital video

*This work was supported by NSF contract number NCR-9203131, JSEP contract number NCR-9203131, NASA contract number NAG2-842, and an NSF Graduate Fellowship.

Comcast, Ex. 1018

decoder, resulting in a loss of the signal. Consequently, a robust digital transmission technique for multimedia signals must alleviate the ISI caused by CATV channels if reliable transmission is to be achieved.

A second source of signal degradation in CATV networks is interference from other signals. For example, leaks in a CATV network caused by poorly shielded consumer devices or system hardware allow amateur radio (ham) signals to enter the CATV system. Because the frequency spectrum allocations for CATV and ham overlap, receivers on leaky CATV networks can tune interfering ham signals along with the desired signals. As a result, the received signal is degraded. Furthermore, the bandwidth of ham signals can vary from fewer than 100 Hz to several megahertz.[1] In addition, the duration, spectral location, and severity of ham interferers can vary. As a result, an effective digital transmission scheme must be able to maintain a desired performance level in the presence of interfering signals.

In the next section, we discuss two candidate techniques for multimedia transmission on the CATV network: single-carrier quadrature amplitude modulation (QAM) with equalization and multicarrier modulation. Subsequently, we present a simulated channel, and we compare the performances of the single-carrier and multicarrier systems on this channel. Our results indicate that for a fixed system throughput, the computational complexity of the multicarrier system is significantly less than that of the single-carrier system. Next, we simulate a ham interfering signal and investigate its effect on the achievable data rates and system complexities. Simulations show that a slightly more complex multicarrier system achieves bit rates and data rates only slightly lower than those achievable on the "clean" channel. In contrast, the single-carrier system requires an enormous increase in complexity to achieve a data throughput comparable to the multicarrier system's.

Background

Although numerous digital transmission techniques exist for transmitting digital signals on bandlimited channels, given a finite-complexity constraint and the desire to achieve high throughput with little latency, there are two practical options: single-carrier quadrature amplitude modulation (QAM) with equalization and multicarrier modulation. In QAM, symbols are decoded one by one in the receiver. Because practical channels cause ISI, an equalizer is used to reduce the ISI, thereby improving the performance of the system with a fixed complexity. Equalization is, however, an inherently suboptimal detection method for practical channels. Furthermore, equalizers do not perform well on channels with significant deviations in their frequency response magnitudes. As a result, we investigate multicarrier modulation for digital transmission over CATV networks.

In multicarrier modulation, a channel is divided into N equal-bandwidth subchannels, each with its own carrier, such that the frequency response is roughly constant across each subchannel. The resulting subchannels are approximately memoryless if N is large enough. *Discrete multitone modulation (DMT)*, a common form of multicarrier modulation, makes the subchannels exactly independent and memoryless in the white Gaussian noise case by using the basis vectors of the inverse fast Fourier transform (IFFT) as the subchannel carriers and adding a *cyclic prefix* to each symbol. The cyclic prefix is a block of deterministic data that is used to "clear" each subchannel after every symbol period, and it is discarded at the receiver prior to reconstructing the data stream using an FFT. The length of the cyclic prefix must be sufficient to ensure that blocks of data from one symbol period to the next do not interfere with each other. Specifically, if the length of the channel impulse response is $\nu + 1$, then the length of the cyclic prefix must be ν. Because each transmitted block must have a cyclic prefix to be transmitted over any non-ideal channel, a portion of every block is wasted by the inclusion of the cyclic prefix. Therefore, one goal in the design of a multicarrier system is to minimize the percentage of each block wasted by transmitting the cyclic prefix. For any fixed channel impulse response, the percentage of each block lost to the cyclic prefix decreases as the FFT/IFFT size (which is $2N$)[1] is increased. The penalty for the increased FFT/IFFT size is an increase in system complexity. This relationship will be demonstrated in detail in the next section.

In contrast to traditional frequency-division multiplexing (FDM) techniques, multicarrier modulation does not constrain the number of bits per subchannel

[1] A $2N$-point complex-to-real IFFT is required in the transmitter to ensure that the signal applied to the channel is real.

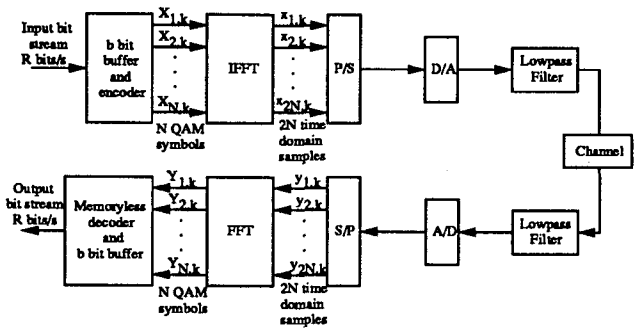

Figure 1: DMT block diagram

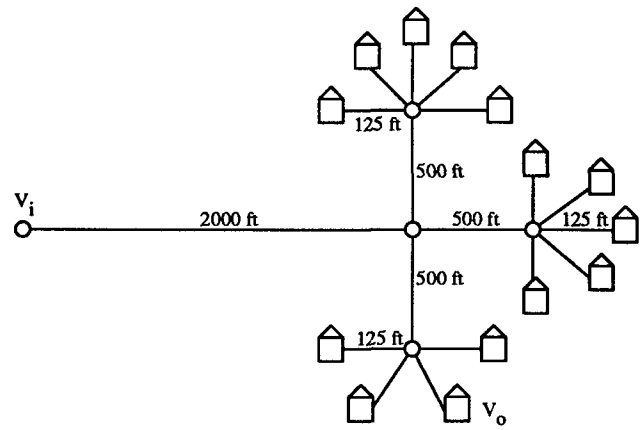

Figure 2: CATV system diagram

to be equal for all subchannels. Instead, bits are originally assigned to subchannels just after training during system initialization in direct proportion to the subchannel signal-to-noise ratios. As a result, subchannels that suffer from little attenuation and/or little noise carry the most bits, while subchannels that are severely attenuated and/or very noisy might not carry any bits. This property can be used to alleviate the problems caused by both frequency-domain ripple and interferers such as ham radio signals. Because the bit distribution is continuously updated during transmission as the receiver sends the required information to the transmitter on secure overhead channels, even severe and unpredictable interference like ham can be tolerated by a multicarrier system. If the noise on a subchannel becomes severe while the system is in use, the transmitter simply assigns fewer or no bits to that subchannel while the noise persists. Each subchannel then supports its own QAM constellation, and, because the subchannels are essentially independent and memoryless, a memoryless detector is used for each in the receiver. As a result, no equalizer is required in the multicarrier receiver. Figure 1 shows a block diagram of the DMT transmitter and receiver. For more information on multicarrier modulation and DMT, see [2], [3], [4], [5], and [6].

Simulations

In this section, we describe our simulated channel model and discuss how well our model approximates actual CATV channels. We then use our simulated channel to compare the performances, in terms of the computational complexity required to support a given throughput, of multicarrier systems and single-carrier systems with equalization. Finally, we modify our simulated channel to determine the effects of interference from amateur radio signals or other comparatively narrowband signals on the two transmission systems.

CATV Channel Model

To enable us to quantify the performances of both single-carrier and multicarrier modulation on CATV channels, we computed a "typical" channel frequency response using the system configuration shown in Figure 2.[2] Because most of the degradations to CATV signals are caused by "leaky" hardware in subscriber drops, we have only modeled the portion of the cable system that is nearest to subscriber homes. The system is modeled as 1/2" copperclad coaxial cable delivering signals through bridge taps to fourteen homes. We have assumed that both source and termination impedances are 75Ω. Since the upstream frequency allocation in most CATV systems is from 5-40 MHz, and we are trying to determine the viability of transmitting bidirectionally on the CATV network, we selected the 6-MHz slot from 30-36 MHz as our simulated channel. The frequency response magnitude of this channel is shown in Figure 3. In computing the frequency response magnitude of the channel, we have assumed the presence of a gain element that brings the maximum magnitude to 0 dB. We note that our channel meets the FCC's technical specifications for the frequency response of CATV channels.[7] Furthermore, our channel exhibits the frequency-domain rippling that is common

[2] Thanks to Professor D. G. Messerschmitt of the University of California at Berkeley for making his transmission line modeling program available to our research group.

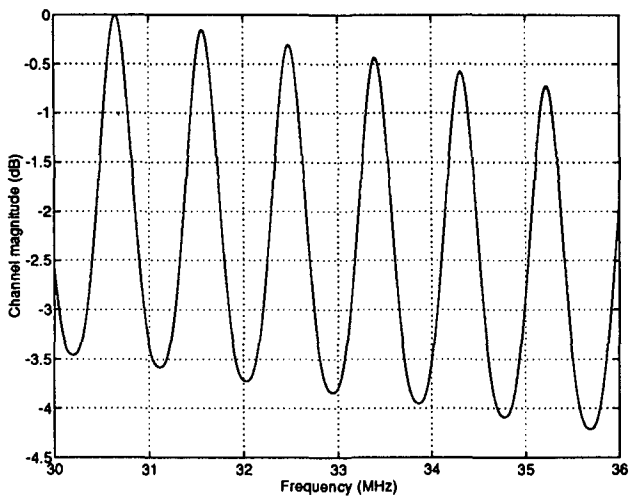

Figure 3: Frequency response magnitude of simulated channel

in actual CATV channels due to leaky consumer hardware such as splitters. Consequently, this channel will help us to illustrate the ability of multicarrier modulation to combat ISI. In addition, by modeling interfering signals as flat nulls in the channel's frequency response, we will be able to illustrate the effect of interferers on the performances of both single-carrier and multicarrier transmission systems.

System Comparison on Simulated Channel

In this section, we investigate the achievable data rates and complexities of both DMT and single-carrier systems for various signal power and channel noise levels. We assume here that no interfering signals, either from within the CATV system or from external sources, degrade the channel.

First, we simulated the DMT system described previously using $2N = 4096$ (2048 subchannels) with our simulated channel and symbol error probabilities of 10^{-7} and 10^{-9}. We assumed a flat noise power spectral density over the 6 MHz bandwidth and a flat power distribution over the subchannels. With these assumptions, we have defined the overall DMT signal-to-noise ratio (SNR) as the ratio of the signal power to the noise power for the subchannels that have 0 dB attenuation. Allocating fractional numbers of bits to subchannels was allowed in the simulation, and a 5.0 dB coding gain was assumed. Table 1 details the

Table 1: Achievable bit rates on simulated channel

DMT SNR (dB)	Bit rate (Mbps)	
	$P_e = 10^{-7}$	$P_e = 10^{-9}$
40	65.256	57.493
43	71.251	63.485
46	77.246	69.479
49	83.243	75.474
52	89.240	81.471
55	95.237	87.467
58	101.23	93.464
61	107.23	99.461

achievable bit rates for various DMT SNRs and the two error probabilities.[3] We see from the data in the table that, for any SNR, the throughput of the system operating with a symbol error probability of 10^{-9} is decreased by approximately 7.8 Mbits/s with respect to the $P_e = 10^{-7}$ system. For either symbol error probability, however, the throughput of the multicarrier system is adequate to support a number of multimedia services. For example, with 49 dB SNR and $P_e = 10^{-7}$, a bit rate of 83.243 Mbits/s is high enough to support 4 20-Mbit/s HDTV signals or 16 5-Mbit/s digitized NTSC signals. We note that a 6-MHz slot on the CATV network could easily be used to transmit a variety of multimedia signals with different bandwidth requirements simply by assigning an appropriate number of subchannels to each signal. Furthermore, because of the flexibility in bandwidth allocation that multicarrier affords, a given 6-MHz slot could serve several users at the same time.

To illustrate the relationship between the channel frequency response magnitude and the number of bits supported by each DMT subchannel, Figure 4 shows the bit allocation for the 49 dB SNR case with a symbol error probability of 10^{-9}. Because both the power distribution and noise power spectral density are assumed to be flat, each subchannel supports a number of bits directly proportional to its frequency response magnitude.

Because the complexity of DMT systems is proportional to the FFT/IFFT size used in the implementation (or, equivalently, the number of subchannels into which the channel is divided), we varied the FFT size to determine the effect of a reduced number of subchannels on the achievable bit rate. With $P_e = 10^{-9}$, the results are given in Table 2. In addition to the achievable bit rates, Table 2 gives the

[3] These data were first presented in [8].

Table 2: Achievable bit rates with $P_e = 10^{-9}$ as a function of FFT size

DMT SNR (dB)	FFT size ($M = 2N$)					
	4096	2048	1024	512	256	128
40	57.493	57.468	57.420	57.323	57.131	56.752
43	63.485	63.457	63.402	63.294	63.078	62.653
46	69.479	69.448	69.388	69.267	69.028	68.556
49	75.474	75.441	75.374	75.243	74.980	74.461
52	81.471	81.434	81.362	81.218	80.933	80.366
55	87.467	87.428	87.350	87.195	86.885	86.272
58	93.464	93.422	93.338	93.171	92.838	92.178
61	99.464	99.416	99.326	99.147	98.791	98.084
% data	98.6	97.2	94.3	88.7	77.3	54.7
Complexity (MIPS) (assumes $2M \log_2 M$ instructions/FFT)	264	240	216	192	168	144

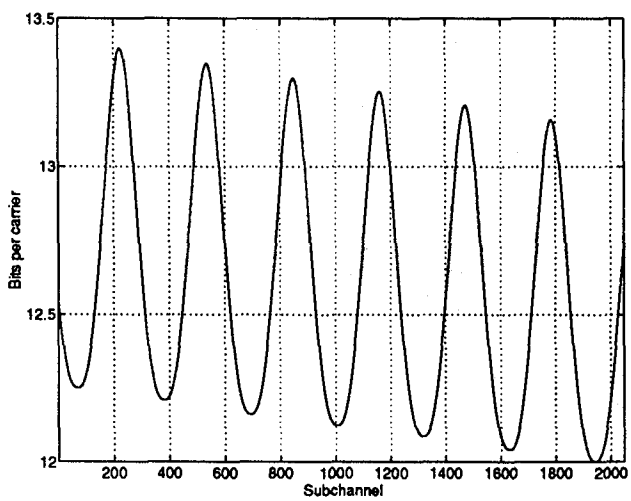

Figure 4: Bit allocation for multicarrier system with 49 dB SNR and $P_e = 10^{-9}$

percentage of each block that is actually data given that the length of our channel's impulse response is approximately $\nu + 1 = 59$ symbol periods. Finally, the complexity, in millions of instructions per second (MIPS), of the multicarrier transmitter and receiver combination is given for each FFT size. The number of instructions required to compute the M-point FFT of a real input sequence is commonly approximated as $2M \log_2 M$, where M is a power of 2. Because we must compute $\frac{2}{MT}$ FFTs per second for a passband multicarrier system operating in a bandwidth of $1/T$ Hz, we find that the complexity in MIPS for a multicarrier system is roughly equal to $\frac{4 \log_2 M}{T}$, where $M = 2N$ in our notation. We have assumed in computing the complexity values in the table that the multicarrier system uses the entire 6 MHz of allocated bandwidth.

The data in Table 2 show that for a given DMT SNR, the maximum achievable bit rate decreases only slightly as the FFT size (or, equivalently, the system complexity) is decreased. However, the percentage of each block that is data decreases more dramatically as the cyclic prefix consumes a larger percentage of each size-$2N$ block. Because we wish to maximize the amount of data transmitted, we cannot arbitrarily decrease the size of our FFT simply because the system throughput remains approximately constant.[4] Consequently, we will constrain the minimum FFT size to be 512, allowing a maximum 11.3% of each transmitted block to be lost to the cyclic prefix. In addition, because the achievable bit rates for $P_e = 10^{-9}$ with $2N = 4096$, 2048, and 1024 are nearly equal, and the data percentages per block are also similar, we have used only the FFT sizes 1024 and 512 with $P_e = 10^{-9}$ in the following analysis.

To compute the complexity of single-carrier systems yielding the same throughputs as the DMT systems, we first computed the data rates and the numbers of bits per symbol that must be supported by each single-carrier QAM system. After adjusting the throughput values according to the data percentages given in Table 2, we find that single-carrier QAM systems must support the bit rates and approximate numbers of bits given in Table 3. To make the comparison between the single-carrier and multicarrier systems more tractable for the reader, we have maintained a column of DMT

[4] In actuality, we could use the smaller FFT sizes (for example, $2N \leq 256$) by implementing a time-domain equalizer (TEQ), the purpose of which is to reduce the required length of the cyclic prefix in exchange for an increase in system complexity. A detailed discussion of the TEQ is beyond the scope of this paper, but interested readers should consult [5] or [9] for details.

Table 3: Data for single-carrier systems assuming 5.0 dB coding gain

DMT SNR (dB)	Corresponding to $N = 1024$ DMT			Corresponding to $N = 512$ DMT		
	Data (Mbps)	QAM bits	SNR_{rcv}	Data (Mbps)	QAM bits	SNR_{rcv}
40	54.170	9	32.5	50.828	8	29.5
43	59.813	10	35.5	56.123	9	32.5
46	65.461	11	38.5	61.419	10	35.5
49	71.108	12	41.5	66.718	11	38.5
52	76.757	13	44.5	72.016	12	41.5
55	82.406	14	47.5	77.316	13	44.5
58	88.055	15	50.5	82.615	14	47.5
61	93.704	16	53.5	87.914	15	50.5

SNR values. Table 3 also contains the SNRs that must be achieved by single-carrier receivers to support the required numbers of bits. In computing the required receiver SNRs, we have used the rule of thumb that, for $P_e = 10^{-9}$, the first 2 QAM bits require 16.5 dB, and each additional bit requires 3.0 dB. Additionally, we have assumed, as we did for the multicarrier system, a 5.0 dB coding gain.

Finally, we simulated a series of minimum mean-square-error linear equalizers (MMSE-LEs) to compare the single-carrier computational complexities at the various data throughput rates to the complexities of the corresponding DMT systems. Since the complexity of an MMSE-LE is proportional to the number of taps, N_f, in the equalizer, we have computed the approximate numbers of taps required for the MMSE-LEs to achieve the required SNRs given in Table 3. The results are given in Table 4. In Table 4, γ is the "complexity increase factor," and it is the ratio of MMSE-LE complexity to DMT complexity for each DMT SNR and FFT size given in the table. In computing the complexities for the MMSE-LE systems, we have assumed $T/2$ spacing and a transmit symbol rate of 6 Msymbols/s. Therefore, the bandwidths of the single-carrier and multicarrier systems are equal. In addition, the increases in complexity for both the DMT system and the single-carrier system due to the 5.0 dB code are approximately equal. Thus, we have neglected the code in our complexity calculations in both cases. The data in Table 4 show that the complexity of the MMSE-LE system increases with SNR in contrast to the DMT system, the complexity of which is constant for any SNR once the FFT size is selected. Furthermore, the complexity increase factors given in Table 4 show that, for this channel, the complexity of a single-carrier QAM system with an MMSE-LE receiver is at least 2.5 times the complexity of a DMT system operating at the same data rate.

We note that by using a decision feedback equalizer (DFE) instead of a linear equalizer, the complexity of the single-carrier system might be reduced slightly with respect to the MMSE-LE case because only the feedforward filter would need to run at the $T/2$ rate. However, our preliminary results from DFE simulations show that the complexity of a DFE receiver is still at least twice that of the multicarrier system.

System Comparison on Degraded Channel

In this section, we explore the effect of interfering signals on the performances of single-carrier and multicarrier systems. For this simulation, we have simulated a ham interferer of bandwidth 30-kHz located near the middle of our 6-MHz simulated channel. We have assumed that the ham signal causes a -20 dB null in our channel's frequency response magnitude, as shown in Figure 5.

In order to select an appropriate FFT size for the multicarrier system, we computed the channel's impulse response to determine the required cyclic prefix length. Since the impulse response length is roughly 281 samples, we chose $2N = 2048$, implying that approximately 86% of each transmitted block is data. Assuming $P_e = 10^{-9}$ and 5.0 dB coding gain, we then simulated another multicarrier system and found the achievable bit rates on this channel for the same DMT SNRs we used previously. The results are given in Table 5. Comparing the bit rates given in Table 5 with those in Table 2 for the case $2N = 2048$, we see that the effect of the interferer is a minimal decrease in the overall bit rate for each value of DMT SNR. A plot of the bit distribution, shown in Figure 6 for the 49 dB SNR case, indicates that only the subchannels overlap-

Table 4: MMSE-LE complexity data assuming $T/2$-spaced equalizer

DMT SNR (dB)	Corresponding to $2N = 1024$ DMT			Corresponding to $2N = 512$ DMT		
	N_f	Complexity (MIPS)	γ	N_f	Complexity (MIPS)	γ
40	45	540	2.50	40	480	2.50
43	45	540	2.50	45	540	2.81
46	50	600	2.75	45	540	2.81
49	50	600	2.75	45	540	2.81
52	55	660	3.00	50	600	3.13
55	60	720	3.33	50	600	3.13
58	70	840	3.88	55	660	3.44
61	75	900	4.17	65	780	4.06

Table 5: Achievable bit rates and data rates for $2N = 2048$ DMT system on channel with 30-kHz interfering signal

DMT SNR (dB)	Bit rate (Mbps)	Data rate (Mbps)
40	57.314	49.479
43	63.600	54.647
46	69.291	59.819
49	75.283	64.992
52	81.276	70.166
55	87.270	75.340
58	93.264	80.515
61	99.258	85.689

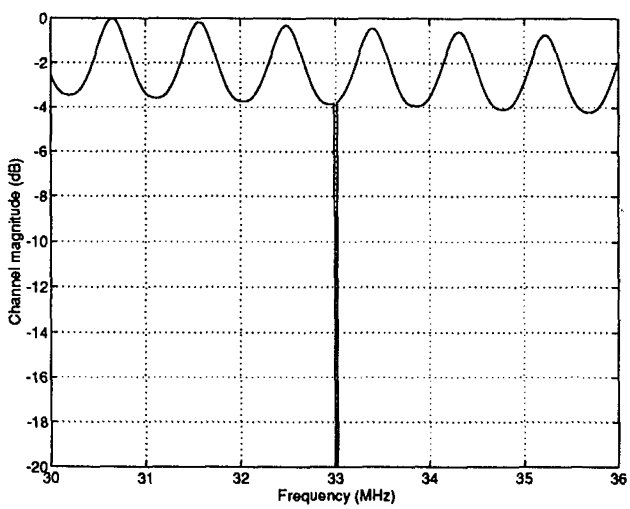

Figure 5: Frequency response magnitude of simulated channel with 30-kHz interferer

ping the interfering signal's bandwidth carry fewer bits than they did in the previous simulations. However, since the channel's impulse response length has increased significantly, the data percentage per block has decreased, yielding lower data rates. Specifically, for each DMT SNR value, the percent decrease in data throughput with respect to the data rates achievable with $2N = 2048$ on the "clean" channel of the previous section is about 11%.

Finally, we computed the required numbers of QAM bits and receiver SNRs and simulated another set of MMSE-LEs that achieve the same data rates as the DMT systems on the degraded channel. The pertinent values are given in Table 6. In computing the data in Table 6, we have again assumed a 5.0 dB coding gain and $T/2$ equalizer spacing. The values of γ in Table 6 clearly illustrate the dramatic increase in complexity required by the MMSE-LE to achieve the same data rates as the multicarrier system. We note again that the complexity of the single-carrier system increases with SNR, while that of the multicarrier system remains 240 MIPS. Furthermore, if the bandwidth of the interfering ham signal were even wider than the 30 kHz we assumed, then the complexity comparison would further favor multicarrier. Equalizers with reasonable numbers of taps are simply not effective on channels with so-called "dead-zones" caused by strong interfering signals. Thus, to achieve data rates on the order of those attainable with a multicarrier system on a channel with a dead-zone, a receiver would need an equalizer with a prohibitive number of taps.

Table 6: MMSE-LE data for degraded channel

DMT SNR (dB)	Data rate (Mbps)	QAM bits	SNR_{rcv}	N_f	Complexity (MIPS)	γ
40	49.479	8	29.5	160	1920	8.00
43	54.647	9	32.5	165	1980	8.25
46	59.819	10	35.5	170	2040	8.50
49	64.992	11	38.5	195	2340	9.75
52	70.166	12	41.5	225	2700	11.25
55	75.340	13	44.5	250	3000	12.50
58	80.515	13	44.5	250	3000	12.50
61	85.689	14	47.5	260	3120	13.00

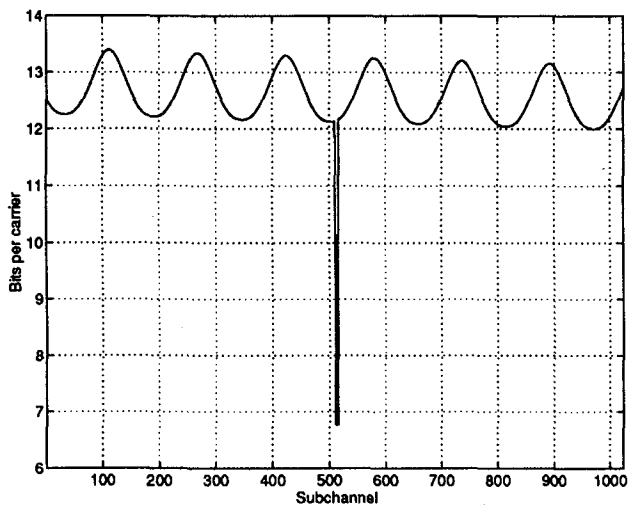

Figure 6: Bit allocation for multicarrier system on degraded channel with 49 dB SNR and $P_e = 10^{-9}$

Conclusion

The results of our simulations indicate that discrete multitone modulation is more computationally efficient than single-carrier modulation with equalization for the transmission of digital data over CATV channels with rippled passbands. Furthermore, DMT can easily adapt to a variety of channel degradations, optimizing the system bit rate for a given channel and complexity. Because system reliability is important for any consumer service, a digital transmission system must maintain a certain level of performance under a wide variety of circumstances. Given our simulation results, multicarrier modulation appears to be better equipped than single-carrier modulation to accomplish this objective.

References

[1] R. Pience. private communication. February 1994.

[2] J.M. Cioffi. "A Multicarrier Primer". In *ANSI T1E1.4 Committee Contribution*, pages 91–157, Boca Raton, FL, November 1991.

[3] J. A. C. Bingham. "Multicarrier Modulation for Data Transmission : An Idea whose Time Has Come". *IEEE Communications Magazine*, 28(5):5–14, May 1990.

[4] A. Ruiz, J.M. Cioffi, and S. Kasturia. "Discrete Multiple Tone Modulation with Coset Coding for the Spectrally Shaped Channel". *IEEE Transactions on Communications*, 40:1012–29, June 1992.

[5] J.S.Chow, J.C.Tu, and J.M.Cioffi. "A Computationally Efficient Adaptive Transceiver for High-Speed Digital Subscriber Lines". In *Proceedings 1990 International Conference on Communications*, June 1990. Boston, MA.

[6] J.C. Tu. *Theory, Design and Application of Multichannel Modulation for Digital Communications.* PhD thesis, Stanford University, June 1991.

[7] Federal Communications Commission. "Code of Federal Regulations". Title 47, Part 76.605. 1992.

[8] K.S. Jacobsen and J.M. Cioffi. "High-performance Multimedia Transmission on the Cable Television Network". In *Proceedings 1994 International Conference on Communications*, New Orleans, LA, May 1994.

[9] J.S. Chow. *Finite-length Equalization for Multicarrier Transmission Systems.* PhD thesis, Stanford University, June 1992.