8451119

THE UNITED STATES OF AMERICA

TO ALL TO WHOM THESE PRESENTS SHALL COME:

UNITED STATES DEPARTMENT OF COMMERCE

United States Patent and Trademark Office

January 22, 2024

THIS IS TO CERTIFY THAT ANNEXED IS A TRUE COPY FROM THE RECORDS OF THIS OFFICE OF THE FILE WRAPPER AND CONTENTS OF:

APPLICATION NUMBER: ***13/962,871***
FILING DATE: ***August 08, 2013***
PATENT NUMBER: ***9100622***
ISSUE DATE: ***August 04, 2015***

UNITED STATES PATENT AND TRADEMARK OFFICE
DEPARTMENT OF COMMERCE

Certified by

Kathi

Performing the Functions and Duties of the
Under Secretary of Commerce
for Intellectual Property
and Director of the United States
Patent and Trademark Office

Client No. 89194

PTO/AIA/80 (07-12)
Approved for use through 11/30/2014. OMB 0651-0035
U.S. Patent and Trademark Office; U.S DEPARTMENT OF COMMERCE
Under the Paperwork Reduction Act of 1995, no persons are required to respond to a collection of information unless it displays a valid OMB control number.

POWER OF ATTORNEY TO PROSECUTE APPLICATIONS BEFORE THE USPTO

I hereby revoke all previous powers of attorney given in the application identified in the attached statement under 37 CFR 3.73(c).

I hereby appoint:

[■] Practitioners associated with Customer Number: 20350

OR

[ ] Practitioner(s) named below (if more than ten patent practitioners are to be named, then a customer number must be used):

Name	Registration Number	Name	Registration Number

As attorney(s) or agent(s) to represent the undersigned before the United States Patent and Trademark Office (USPTO) in connection with any and all patent applications assigned only to the undersigned according to the USPTO assignment records or assignments documents attached to this form in accordance with 37 CFR 3.73(c).

Please change the correspondence address for the application identified in the attached statement under 37 CFR 3.73(c) to:

[■] The address associated with Customer Number: 20350

OR

[ ] Firm or Individual Name			
Address			
City		State	Zip
Country			
Telephone		Email	

Assignee Name and Address: MaxLinear, Inc.
2051 Palomar Airport Road, Suite 100
Carlsbad, California 92011

A copy of this form, together with a statement under 37 CFR 3.73(c) (Form PTO/AIA/96 or equivalent) is required to be Filed in each application in which this form is used. The statement under 37 CFR 3.73(c) may be completed by one of The practitioners appointed in this form, and must identify the application in which this Power of Attorney is to be filed.

SIGNATURE of Assignee of Record

The individual whose signature and title is supplied below is authorized to act on behalf of the assignee

Signature		Date	25JUL2013
Name	Curtis Ling	Telephone	760 692 0711
Title	Chief Technical Officer		

This collection of information is required by 37 CFR 1.31, 1.32 and 1.33. The information is required to obtain or retain a benefit by the public which is to file (and by the USPTO to process) an application. Confidentiality is governed by 35 U.S.C. 122 and 37 CFR 1.11 and 1.14. This collection is estimated to take 3 minutes to complete, including gathering, preparing, and submitting the completed application form to the USPTO. Time will vary depending upon the individual case. Any comments on the amount of time you require to complete this form and/or suggestions for reducing this burden, should be sent to the Chief Information Officer, U.S. Patent and Trademark Office, U.S. Department of Commerce, P.O. Box 1450, Alexandria, VA 22313-1450. DO NOT SEND FEES OR COMPLETED FORMS TO THIS ADDRESS. **SEND TO: Commissioner for Patents, P.O. Box 1450, Alexandria, VA 22313-1450.**

If you need assistance in completing the form, call 1-800-PTO-9199 and select option 2.

PTO/AIA/96 (08-12)
Approved for use through 01/31/2013. OMB 0651-0031
U.S. Patent and Trademark Office, U.S. DEPARTMENT OF COMMERCE
Under the Paperwork Reduction Act of 1995, no persons are required to respond to a collection of information unless it displays a valid OMB control number.

STATEMENT UNDER 37 CFR 3.73(c)

Applicant/Patent Owner: MaxLinear, Inc.

Application No./Patent No.: _____ Filed/Issue Date: HEREWITH

Titled: WIDEBAND TUNER ARCHITECTURE

MaxLinear, Inc., a corporation

(Name of Assignee) (Type of Assignee, e.g., corporation, partnership, university, government agency, etc.)

states that, for the patent application/patent identified above, it is (choose **one** of options 1, 2, 3 or 4 below):

1. ☑ The assignee of the entire right, title, and interest.

2. ☐ An assignee of less than the entire right, title, and interest (check applicable box):

   ☐ The extent (by percentage) of its ownership interest is _____%. Additional Statement(s) by the owners holding the balance of the interest must be submitted to account for 100% of the ownership interest.

   ☐ There are unspecified percentages of ownership. The other parties, including inventors, who together own the entire right, title and interest are:

   Additional Statement(s) by the owner(s) holding the balance of the interest must be submitted to account for the entire right, title, and interest.

3. ☐ The assignee of an undivided interest in the entirety (a complete assignment from one of the joint inventors was made). The other parties, including inventors, who together own the entire right, title, and interest are:

   Additional Statement(s) by the owner(s) holding the balance of the interest must be submitted to account for the entire right, title, and interest.

4. ☐ The recipient, via a court proceeding or the like (*e.g.*, bankruptcy, probate), of an undivided interest in the entirety (a complete transfer of ownership interest was made). The certified document(s) showing the transfer is attached.

The interest identified in option 1, 2 or 3 above (not option 4) is evidenced by either (choose **one** of options A or B below):

A. ☑ An assignment from the inventor(s) of the patent application/patent identified above. The assignment was recorded in the United States Patent and Trademark Office at Reel 024628, Frame 0565, or for which a copy thereof is attached.

B. ☐ A chain of title from the inventor(s), of the patent application/patent identified above, to the current assignee as follows:

1. From: _____ To: _____

   The document was recorded in the United States Patent and Trademark Office at

   Reel _____, Frame _____, or for which a copy thereof is attached.

2. From: _____ To: _____

   The document was recorded in the United States Patent and Trademark Office at

   Reel _____, Frame _____, or for which a copy thereof is attached.

This collection of information is required by 37 CFR 3.73(b). The information is required to obtain or retain a benefit by the public which is to file (and by the USPTO to process) an application. Confidentiality is governed by 35 U.S.C. 122 and 37 CFR 1.11 and 1.14. This collection is estimated to take 12 minutes to complete, including gathering, preparing, and submitting the completed application form to the USPTO. Time will vary depending upon the individual case. Any comments on the amount of time you require to complete this form and/or suggestions for reducing this burden, should be sent to the Chief Information Officer, U.S. Patent and Trademark Office, U.S. Department of Commerce, P.O. Box 1450, Alexandria, VA 22313-1450. DO NOT SEND FEES OR COMPLETED FORMS TO THIS ADDRESS. **SEND TO: Commissioner for Patents, P.O. Box 1450, Alexandria, VA 22313-1450.**

If you need assistance in completing the form, call 1-800-PTO-9199 and select option 2.

Under the Paperwork Reduction Act of 1995, no persons are required to respond to a collection of information unless it displays a valid OMB control number.

STATEMENT UNDER 37 CFR 3.73(c)

3. From: _____ To: _____

The document was recorded in the United States Patent and Trademark Office at

Reel _____, Frame _____, or for which a copy thereof is attached.

4. From: _____ To: _____

The document was recorded in the United States Patent and Trademark Office at

Reel _____, Frame _____, or for which a copy thereof is attached.

5. From: _____ To: _____

The document was recorded in the United States Patent and Trademark Office at

Reel _____, Frame _____, or for which a copy thereof is attached.

6. From: _____ To: _____

The document was recorded in the United States Patent and Trademark Office at

Reel _____, Frame _____, or for which a copy thereof is attached.

☐ Additional documents in the chain of title are listed on a supplemental sheet(s).

☑ As required by 37 CFR 3.73(c)(1)(i), the documentary evidence of the chain of title from the original owner to the assignee was, or concurrently is being, submitted for recordation pursuant to 37 CFR 3.11.

[NOTE: A separate copy (i.e., a true copy of the original assignment document(s)) must be submitted to Assignment Division in accordance with 37 CFR Part 3, to record the assignment in the records of the USPTO. See MPEP 302.08]

The undersigned (whose title is supplied below) is authorized to act on behalf of the assignee.

/Ardeshir Tabibi/	August 8, 2013
Signature	Date
Ardeshir Tabibi	48,750
Printed or Typed Name	Title or Registration Number

Privacy Act Statement

The **Privacy Act of 1974 (P.L. 93-579)** requires that you be given certain information in connection with your submission of the attached form related to a patent application or patent. Accordingly, pursuant to the requirements of the Act, please be advised that: (1) the general authority for the collection of this information is 35 U.S.C. 2(b)(2); (2) furnishing of the information solicited is voluntary; and (3) the principal purpose for which the information is used by the U.S. Patent and Trademark Office is to process and/or examine your submission related to a patent application or patent. If you do not furnish the requested information, the U.S. Patent and Trademark Office may not be able to process and/or examine your submission, which may result in termination of proceedings or abandonment of the application or expiration of the patent.

The information provided by you in this form will be subject to the following routine uses:

1. The information on this form will be treated confidentially to the extent allowed under the Freedom of Information Act (5 U.S.C. 552) and the Privacy Act (5 U.S.C 552a). Records from this system of records may be disclosed to the Department of Justice to determine whether disclosure of these records is required by the Freedom of Information Act.
2. A record from this system of records may be disclosed, as a routine use, in the course of presenting evidence to a court, magistrate, or administrative tribunal, including disclosures to opposing counsel in the course of settlement negotiations.
3. A record in this system of records may be disclosed, as a routine use, to a Member of Congress submitting a request involving an individual, to whom the record pertains, when the individual has requested assistance from the Member with respect to the subject matter of the record.
4. A record in this system of records may be disclosed, as a routine use, to a contractor of the Agency having need for the information in order to perform a contract. Recipients of information shall be required to comply with the requirements of the Privacy Act of 1974, as amended, pursuant to 5 U.S.C. 552a(m).
5. A record related to an International Application filed under the Patent Cooperation Treaty in this system of records may be disclosed, as a routine use, to the International Bureau of the World Intellectual Property Organization, pursuant to the Patent Cooperation Treaty.
6. A record in this system of records may be disclosed, as a routine use, to another federal agency for purposes of National Security review (35 U.S.C. 181) and for review pursuant to the Atomic Energy Act (42 U.S.C. 218(c)).
7. A record from this system of records may be disclosed, as a routine use, to the Administrator, General Services, or his/her designee, during an inspection of records conducted by GSA as part of that agency's responsibility to recommend improvements in records management practices and programs, under authority of 44 U.S.C. 2904 and 2906. Such disclosure shall be made in accordance with the GSA regulations governing inspection of records for this purpose, and any other relevant (*i.e.*, GSA or Commerce) directive. Such disclosure shall not be used to make determinations about individuals.
8. A record from this system of records may be disclosed, as a routine use, to the public after either publication of the application pursuant to 35 U.S.C. 122(b) or issuance of a patent pursuant to 35 U.S.C. 151. Further, a record may be disclosed, subject to the limitations of 37 CFR 1.14, as a routine use, to the public if the record was filed in an application which became abandoned or in which the proceedings were terminated and which application is referenced by either a published application, an application open to public inspection or an issued patent.
9. A record from this system of records may be disclosed, as a routine use, to a Federal, State, or local law enforcement agency, if the USPTO becomes aware of a violation or potential violation of law or regulation.

Electronic Acknowledgement Receipt

EFS ID:	16543599
Application Number:	13962871
International Application Number:	
Confirmation Number:	3953
Title of Invention:	Wideband Tuner Architecture
First Named Inventor/Applicant Name:	Madhukar Reddy
Customer Number:	20350
Filer:	Ardeshir Tabibi/Gloria Sikora
Filer Authorized By:	Ardeshir Tabibi
Attorney Docket Number:	89194-002720US-883946
Receipt Date:	08-AUG-2013
Filing Date:	
Time Stamp:	20:13:42
Application Type:	Utility under 35 USC 111(a)

Payment information:

Submitted with Payment	no

File Listing:

Document Number	Document Description	File Name	File Size(Bytes)/ Message Digest	Multi Part /.zip	Pages (if appl.)
1	Application Data Sheet	002720_ADS.pdf	1505510 6b5ed5625d1c11390c2ad5d35cd791654f61e1ad	no	7

Warnings:

Information:

2		002720_ConApp.pdf	141437 cd941e91082c37af07b6cb641e340bfc7718811d	yes	23
	Multipart Description/PDF files in .zip description				
	Document Description		**Start**	**End**	
	Specification		1	17	
	Claims		18	22	
	Abstract		23	23	
Warnings:					
Information:					
3	Drawings-only black and white line drawings	002720_Figs.pdf	769472 b8606a92890e1de7e6df2d7844bb48cba0b22cb7	no	10
Warnings:					
Information:					
4	Power of Attorney	000000_uPOA_AIA.pdf	219389 d7bd45dc9590fce179cddc3aedfb71f55be74f20	no	1
Warnings:					
Information:					
5	Assignee showing of ownership per 37 CFR 3.73.	002720_373C.pdf	90881 cd3fb241e1259f408c616e8ca7aea801f60151f7	no	3
Warnings:					
Information:					
		Total Files Size (in bytes):	2726689		

This Acknowledgement Receipt evidences receipt on the noted date by the USPTO of the indicated documents, characterized by the applicant, and including page counts, where applicable. It serves as evidence of receipt similar to a Post Card, as described in MPEP 503.

New Applications Under 35 U.S.C. 111
If a new application is being filed and the application includes the necessary components for a filing date (see 37 CFR 1.53(b)-(d) and MPEP 506), a Filing Receipt (37 CFR 1.54) will be issued in due course and the date shown on this Acknowledgement Receipt will establish the filing date of the application.

National Stage of an International Application under 35 U.S.C. 371
If a timely submission to enter the national stage of an international application is compliant with the conditions of 35 U.S.C. 371 and other applicable requirements a Form PCT/DO/EO/903 indicating acceptance of the application as a national stage submission under 35 U.S.C. 371 will be issued in addition to the Filing Receipt, in due course.

New International Application Filed with the USPTO as a Receiving Office
If a new international application is being filed and the international application includes the necessary components for an international filing date (see PCT Article 11 and MPEP 1810), a Notification of the International Application Number and of the International Filing Date (Form PCT/RO/105) will be issued in due course, subject to prescriptions concerning national security, and the date shown on this Acknowledgement Receipt will establish the international filing date of the application.

Under the Paperwork Reduction Act of 1995, no persons are required to respond to a collection of information unless it contains a valid OMB control number.

Application Data Sheet 37 CFR 1.76	Attorney Docket Number	89194-002720US-883946
	Application Number	
Title of Invention	WIDEBAND TUNER ARCHITECTURE	

The application data sheet is part of the provisional or nonprovisional application for which it is being submitted. The following form contains the bibliographic data arranged in a format specified by the United States Patent and Trademark Office as outlined in 37 CFR 1.76.
This document may be completed electronically and submitted to the Office in electronic format using the Electronic Filing System (EFS) or the document may be printed and included in a paper filed application.

Secrecy Order 37 CFR 5.2

☐ Portions or all of the application associated with this Application Data Sheet may fall under a Secrecy Order pursuant to 37 CFR 5.2 (Paper filers only. Applications that fall under Secrecy Order may not be filed electronically.)

Inventor Information:

Inventor 1 Remove

Legal Name

Prefix	Given Name	Middle Name	Family Name	Suffix
	Madhukar		Reddy	

Residence Information (Select One) ◉ US Residency ◯ Non US Residency ◯ Active US Military Service

City	Carlsbad	State/Province	CA	Country of Residence i	US

Mailing Address of Inventor:

Address 1	2051 Palomar Airport Road, Suite 100		
Address 2			
City	Carlsbad	State/Province	CA
Postal Code	92011	Country i	US

Inventor 2 Remove

Legal Name

Prefix	Given Name	Middle Name	Family Name	Suffix
	Curtis		Ling	

Residence Information (Select One) ◉ US Residency ◯ Non US Residency ◯ Active US Military Service

City	Carlsbad	State/Province	CA	Country of Residence i	US

Mailing Address of Inventor:

Address 1	2051 Palomar Airport Road, Suite 100		
Address 2			
City	Carlsbad	State/Province	CA
Postal Code	92011	Country i	US

Inventor 3 Remove

Legal Name

Prefix	Given Name	Middle Name	Family Name	Suffix
	Tim		Gallagher	

Residence Information (Select One) ◉ US Residency ◯ Non US Residency ◯ Active US Military Service

Under the Paperwork Reduction Act of 1995, no persons are required to respond to a collection of information unless it contains a valid OMB control number.

Application Data Sheet 37 CFR 1.76	Attorney Docket Number	89194-002720US-883946
	Application Number	
Title of Invention	WIDEBAND TUNER ARCHITECTURE	

City	Carlsbad	**State/Province**	CA	**Country of Residence** i	US

Mailing Address of Inventor:

Address 1	2051 Palomar Airport Road, Suite 100		
Address 2			
City	Carlsbad	**State/Province**	CA
Postal Code	92011	**Country** i	US

All Inventors Must Be Listed - Additional Inventor Information blocks may be generated within this form by selecting the **Add** button. Add

Correspondence Information:

Enter either Customer Number or complete the Correspondence Information section below. For further information see 37 CFR 1.33(a).

☐ **An Address is being provided for the correspondence Information of this application.**

Customer Number	20350		
Email Address		Add Email	Remove Email

Application Information:

Title of the Invention	WIDEBAND TUNER ARCHITECTURE		
Attorney Docket Number	89194-002720US-883946	**Small Entity Status Claimed**	☒
Application Type	Nonprovisional		
Subject Matter	Utility		
Total Number of Drawing Sheets (if any)	10	**Suggested Figure for Publication (if any)**	

Publication Information:

☐ Request Early Publication (Fee required at time of Request 37 CFR 1.219)

☐ **Request Not to Publish.** I hereby request that the attached application not be published under 35 U.S.C. 122(b) and certify that the invention disclosed in the attached application **has not and will not** be the subject of an application filed in another country, or under a multilateral international agreement, that requires publication at eighteen months after filing.

Representative Information:

Representative information should be provided for all practitioners having a power of attorney in the application. Providing this information in the Application Data Sheet does not constitute a power of attorney in the application (see 37 CFR 1.32).
Either enter Customer Number or complete the Representative Name section below. If both sections are completed the customer Number will be used for the Representative Information during processing.

Please Select One:	◉ Customer Number	○ US Patent Practitioner	○ Limited Recognition (37 CFR 11.9)

Under the Paperwork Reduction Act of 1995, no persons are required to respond to a collection of information unless it contains a valid OMB control number.

Application Data Sheet 37 CFR 1.76	Attorney Docket Number	89194-002720US-883946
	Application Number	

Title of Invention	WIDEBAND TUNER ARCHITECTURE

Customer Number	20350

Domestic Benefit/National Stage Information:

This section allows for the applicant to either claim benefit under 35 U.S.C. 119(e), 120, 121, or 365(c) or indicate National Stage entry from a PCT application. Providing this information in the application data sheet constitutes the specific reference required by 35 U.S.C. 119(e) or 120, and 37 CFR 1.78.

Prior Application Status	Pending		Remove
Application Number	Continuity Type	Prior Application Number	Filing Date (YYYY-MM-DD)
This	Continuation of	12762900	2010-04-19
Prior Application Status	Expired		Remove
Application Number	Continuity Type	Prior Application Number	Filing Date (YYYY-MM-DD)
12762900	non provisional of	61170526	2009-04-17

Additional Domestic Benefit/National Stage Data may be generated within this form by selecting the **Add** button. Add

Foreign Priority Information:

This section allows for the applicant to claim priority to a foreign application. Providing this information in the application data sheet constitutes the claim for priority as required by 35 U.S.C. 119(b) and 37 CFR 1.55(d). When priority is claimed to a foreign application that is eligible for retrieval under the priority document exchange program (PDX) the information will be used by the Office to automatically attempt retrieval pursuant to 37 CFR 1.55(h)(1) and (2). Under the PDX program, applicant bears the ultimate responsibility for ensuring that a copy of the foreign application is received by the Office from the participating foreign intellectual property office, or a certified copy of the foreign priority application is filed, within the time period specified in 37 CFR 1.55(g)(1).

Remove

Application Number	Country	Filing Date (YYYY-MM-DD)	Access Code (if applicable)

Additional Foreign Priority Data may be generated within this form by selecting the **Add** button. Add

Under the Paperwork Reduction Act of 1995, no persons are required to respond to a collection of information unless it contains a valid OMB control number.

Application Data Sheet 37 CFR 1.76	Attorney Docket Number	89194-002720US-883946
	Application Number	
Title of Invention	WIDEBAND TUNER ARCHITECTURE	

Statement under 37 CFR 1.55 or 1.78 for AIA (First Inventor to File) Transition Applications

☐ This application (1) claims priority to or the benefit of an application filed before March 16, 2013 and (2) also contains, or contained at any time, a claim to a claimed invention that has an effective filing date on or after March 16, 2013.
NOTE: By providing this statement under 37 CFR 1.55 or 1.78, this application, with a filing date on or after March 16, 2013, will be examined under the first inventor to file provisions of the AIA.

Authorization to Permit Access:

☒ Authorization to Permit Access to the Instant Application by the Participating Offices

If checked, the undersigned hereby grants the USPTO authority to provide the European Patent Office (EPO), the Japan Patent Office (JPO), the Korean Intellectual Property Office (KIPO), the World Intellectual Property Office (WIPO), and any other intellectual property offices in which a foreign application claiming priority to the instant patent application is filed access to the instant patent application. See 37 CFR 1.14(c) and (h). This box should not be checked if the applicant does not wish the EPO, JPO, KIPO, WIPO, or other intellectual property office in which a foreign application claiming priority to the instant patent application is filed to have access to the instant patent application.

In accordance with 37 CFR 1.14(h)(3), access will be provided to a copy of the instant patent application with respect to: 1) the instant patent application-as-filed; 2) any foreign application to which the instant patent application claims priority under 35 U.S.C. 119(a)-(d) if a copy of the foreign application that satisfies the certified copy requirement of 37 CFR 1.55 has been filed in the instant patent application; and 3) any U.S. application-as-filed from which benefit is sought in the instant patent application.

In accordance with 37 CFR 1.14(c), access may be provided to information concerning the date of filing this Authorization.

Applicant Information:

Providing assignment information in this section does not substitute for compliance with any requirement of part 3 of Title 37 of CFR to have an assignment recorded by the Office.

Under the Paperwork Reduction Act of 1995, no persons are required to respond to a collection of information unless it contains a valid OMB control number.

Application Data Sheet 37 CFR 1.76	Attorney Docket Number	89194-002720US-883946
	Application Number	
Title of Invention	WIDEBAND TUNER ARCHITECTURE	

Applicant 1 Remove

If the applicant is the inventor (or the remaining joint inventor or inventors under 37 CFR 1.45), this section should not be completed. The information to be provided in this section is the name and address of the legal representative who is the applicant under 37 CFR 1.43; or the name and address of the assignee, person to whom the inventor is under an obligation to assign the invention, or person who otherwise shows sufficient proprietary interest in the matter who is the applicant under 37 CFR 1.46. If the applicant is an applicant under 37 CFR 1.46 (assignee, person to whom the inventor is obligated to assign, or person who otherwise shows sufficient proprietary interest) together with one or more joint inventors, then the joint inventor or inventors who are also the applicant should be identified in this section.

Clear

- (●) Assignee
- ( ) Legal Representative under 35 U.S.C. 117
- ( ) Joint Inventor
- ( ) Person to whom the inventor is obligated to assign.
- ( ) Person who shows sufficient proprietary interest

If applicant is the legal representative, indicate the authority to file the patent application, the inventor is:

Name of the Deceased or Legally Incapacitated Inventor :

If the Applicant is an Organization check here. [X]

Organization Name	MAXLINEAR, INC.		
Mailing Address Information:			
Address 1	2051 Palomar Airport Road, Suite 100		
Address 2			
City	Carlsbad	**State/Province**	CA
Country i	US	Postal Code	92011
Phone Number		Fax Number	
Email Address			

Additional Applicant Data may be generated within this form by selecting the Add button. Add

Non-Applicant Assignee Information:

Providing assignment information in this section does not subsitute for compliance with any requirement of part 3 of Title 37 of CFR to have an assignment recorded by the Office.

Assignee 1

Complete this section only if non-applicant assignee information is desired to be included on the patent application publication in accordance with 37 CFR 1.215(b). Do not include in this section an applicant under 37 CFR 1.46 (assignee, person to whom the inventor is obligated to assign, or person who otherwise shows sufficient proprietary interest), as the patent application publication will include the name of the applicant(s).

Remove

If the Assignee is an Organization check here. [ ]

Under the Paperwork Reduction Act of 1995, no persons are required to respond to a collection of information unless it contains a valid OMB control number.

Application Data Sheet 37 CFR 1.76	Attorney Docket Number	89194-002720US-883946
	Application Number	
Title of Invention	WIDEBAND TUNER ARCHITECTURE	

Prefix	**Given Name**	Middle Name	**Family Name**	Suffix

Mailing Address Information:

Address 1			
Address 2			
City		**State/Province**	
Country i		Postal Code	
Phone Number		Fax Number	
Email Address			

Additional Assignee Data may be generated within this form by selecting the Add button. Add

Signature:

Remove

NOTE: This form must be signed in accordance with 37 CFR 1.33. See 37 CFR 1.4 for signature requirements and certifications

Signature	/Ardeshir Tabibi/			Date (YYYY-MM-DD)	2013-08-08
First Name	Ardeshir	Last Name	Tabibi	Registration Number	48750

Additional Signature may be generated within this form by selecting the Add button. Add

This collection of information is required by 37 CFR 1.76. The information is required to obtain or retain a benefit by the public which is to file (and by the USPTO to process) an application. Confidentiality is governed by 35 U.S.C. 122 and 37 CFR 1.14. This collection is estimated to take 23 minutes to complete, including gathering, preparing, and submitting the completed application data sheet form to the USPTO. Time will vary depending upon the individual case. Any comments on the amount of time you require to complete this form and/or suggestions for reducing this burden, should be sent to the Chief Information Officer, U.S. Patent and Trademark Office, U.S. Department of Commerce, P.O. Box 1450, Alexandria, VA 22313-1450. DO NOT SEND FEES OR COMPLETED FORMS TO THIS ADDRESS. **SEND TO: Commissioner for Patents, P.O. Box 1450, Alexandria, VA 22313-1450.**

Privacy Act Statement

The Privacy Act of 1974 (P.L. 93-579) requires that you be given certain information in connection with your submission of the attached form related to a patent application or patent. Accordingly, pursuant to the requirements of the Act, please be advised that: (1) the general authority for the collection of this information is 35 U.S.C. 2(b)(2); (2) furnishing of the information solicited is voluntary; and (3) the principal purpose for which the information is used by the U.S. Patent and Trademark Office is to process and/or examine your submission related to a patent application or patent. If you do not furnish the requested information, the U.S. Patent and Trademark Office may not be able to process and/or examine your submission, which may result in termination of proceedings or abandonment of the application or expiration of the patent.

The information provided by you in this form will be subject to the following routine uses:

1. The information on this form will be treated confidentially to the extent allowed under the Freedom of Information Act (5 U.S.C. 552) and the Privacy Act (5 U.S.C. 552a). Records from this system of records may be disclosed to the Department of Justice to determine whether the Freedom of Information Act requires disclosure of these records.

2. A record from this system of records may be disclosed, as a routine use, in the course of presenting evidence to a court, magistrate, or administrative tribunal, including disclosures to opposing counsel in the course of settlement negotiations.

3. A record in this system of records may be disclosed, as a routine use, to a Member of Congress submitting a request involving an individual, to whom the record pertains, when the individual has requested assistance from the Member with respect to the subject matter of the record.

4. A record in this system of records may be disclosed, as a routine use, to a contractor of the Agency having need for the information in order to perform a contract. Recipients of information shall be required to comply with the requirements of the Privacy Act of 1974, as amended, pursuant to 5 U.S.C. 552a(m).

5. A record related to an International Application filed under the Patent Cooperation Treaty in this system of records may be disclosed, as a routine use, to the International Bureau of the World Intellectual Property Organization, pursuant to the Patent Cooperation Treaty.

6. A record in this system of records may be disclosed, as a routine use, to another federal agency for purposes of National Security review (35 U.S.C. 181) and for review pursuant to the Atomic Energy Act (42 U.S.C. 218(c)).

7. A record from this system of records may be disclosed, as a routine use, to the Administrator, General Services, or his/her designee, during an inspection of records conducted by GSA as part of that agency's responsibility to recommend improvements in records management practices and programs, under authority of 44 U.S.C. 2904 and 2906. Such disclosure shall be made in accordance with the GSA regulations governing inspection of records for this purpose, and any other relevant (i.e., GSA or Commerce) directive. Such disclosure shall not be used to make determinations about individuals.

8. A record from this system of records may be disclosed, as a routine use, to the public after either publication of the application pursuant to 35 U.S.C. 122(b) or issuance of a patent pursuant to 35 U.S.C. 151. Further, a record may be disclosed, subject to the limitations of 37 CFR 1.14, as a routine use, to the public if the record was filed in an application which became abandoned or in which the proceedings were terminated and which application is referenced by either a published application, an application open to public inspections or an issued patent.

9. A record from this system of records may be disclosed, as a routine use, to a Federal, State, or local law enforcement agency, if the USPTO becomes aware of a violation or potential violation of law or regulation.

PATENT APPLICATION

WIDEBAND TUNER ARCHITECTURE

Inventors: Madhukar Reddy, a citizen of The United States, residing at
2051 Palomar Airport Road, Suite 100
Carlsbad, CA 92011

Curtis Ling, a citizen of The United States, residing at
2051 Palomar Airport Road, Suite 100
Carlsbad, CA 92011

Tim Gallagher, a citizen of The United States, residing at
2051 Palomar Airport Road, Suite 100
Carlsbad, CA 92011

Assignee: MaxLinear, Inc.
2051 Palomar Airport Road, Suite 100
Carlsbad, CA 92011-1462

Entity: Small business concern

KILPATRICK TOWNSEND & STOCKTON LLP
Two Embarcadero Center, Eighth Floor
San Francisco, California 94111-3834
Tel: 650-326-2400

WIDEBAND TUNER ARCHITECTURE

CROSS-REFERENCE TO RELATED APPLICATIONS

[0001] This application is a continuation application of US Appln. No. 12/762,900 filed April 19, 2010, which claims benefit under 35 USC 119(e) of US Provisional Appln. No. 61/170,526, filed April 17, 2009, entitled "Wideband Tuner Architecture," the contents of which are incorporated herein by reference in their entirety.

BACKGROUND OF THE INVENTION

[0002] This invention relates to wideband receiver systems and methods having a wideband receiver that is capable of receiving multiple radio frequency channels located in a broad radio frequency spectrum. In particular, the invention relates to wideband receiver systems that are capable of receiving multiple desired television channels that extend over multiple non-contiguous portions of the broad frequency spectrum and grouping them into a contiguous, or substantially-contiguous, frequency spectrum.

[0003] Receivers used to down-convert and selectively filter TV channels are referred to as tuners, and tuners designed to concurrently receive several TV channels are referred to as wideband tuners. Existing tuners for these applications down-convert a swath of channels to an intermediate frequency, which are then sent to a demodulator. Because the swath of channels is not contiguous, this swath includes the desired channels as well as undesired channels. The demodulator employs a high-speed data converter to capture this swath of desired and undesired channels in the digital domain and subsequently filters out the desired channels.

[0004] In general, television channels broadcasted over the air or over cable networks are distributed across a broad frequency spectrum. That is, the channel frequencies may not be adjacent to each other. In certain applications such as DVR and picture-in-picture, the receiver system may have to concurrently receive several desired channels that may or may not be contiguous. The wideband receiver requirement poses a trade-off to the system to limit either the dynamic range of the wideband tuner or reduce the bandwidth covered by the tuner so that fewer channels may be received and processed by the demodulator.

[0005] FIG. 1 shows a conventional wideband tuner 100. Tuner 100 may be a direct conversion tuner and includes a low noise amplifier LNA1 having an input terminal coupled to a radio frequency (RF) input signal 102 and an output terminal coupled to a mixer M1. The RF signal may include one or more television channels receiving from a cable network via an RF connector or wirelessly via an antenna. The RF input signal may include the VHF and UHF television channels in a terrestrial television broadcasting system or the CATV channels in cable networks. In order to receive all broadcasted channels present in the RF input signal, LNA1 must necessarily have a wide tuning range, high linearity, and low noise. Mixer M1 is coupled to a synthesizer S1 that can generate an oscillator frequency located around the center of the RF signal. Mixer M1 frequency down-converts the received RF input signal to a more convenient intermediate frequency (IF) band. Tuner 100 includes an amplifier V1 having a programmable gain for amplifying the IF signal, which is then band-pass filtered by a filter F1 before outputting to a demodulator.

[0006] In general, the RF signal includes multiple desired channels that are located in non-contiguous portions of a radio frequency spectrum. As shown in FIG. 1, the swath of channels 110 occupies a bandwidth BW1 120 at an RF center frequency f_{rfc} 130. Synthesizer S1 may be tuned to a frequency around the center frequency f_{rfc} 130 for mixing channels 110 to an intermediate frequency f_{ifc} 160, the frequency down-mixed channels 140 are amplified by amplifier V1 and then filtered by F1 to produce a swath of channels 170 centered around frequency f_{ifc} 160. In an exemplary application shown in FIG. 1, bandwidth BW1 contains 10 channels. In the case where channels are TV channels that are spaced at either 6 MHz or 8 MHz in most parts of the world, bandwidth BW1 120 would span from 60-80MHz, i.e., the down-converted bandwidth at the intermediate frequency would require a bandwidth equal to at least BW1, or at least 80 MHz when such architecture is used. It is noted that in other applications where the desired RF channels are located in the low band such as channels numbers 2 to 6 (VHF in the terrestrial TV broadcast or CATV) and in the high band such as channels numbers 14 to 83 of the UHF TV broadcast or channel numbers 63-158 of the CATV's ultra band, the bandwidth BW1 can be 800 MHz or higher. This wide bandwidth of 800 MHz would require a very expensive digital processing circuitry such as very high-speed analog to digital conversion and high-speed processor in the demodulator.

[0007] It is desirable to have wideband receiver systems that can increase the dynamic range without requiring expensive data conversion, filtering and channel selection at the demodulator.

BRIEF SUMMARY OF THE INVENTION

[0008] An embodiment of the present invention includes a wideband receiver system that is configured to concurrently receive multiple radio frequency (RF) channels including a number of desired channels that are located in non-contiguous portions of a frequency spectrum and group the desired channels in a contiguous or substantially-contiguous frequency band at an intermediate frequency spectrum, where the term "substantially-contiguous" includes spacing the desired channels close to each other (e.g. as a fraction of the total system bandwidth, or relative to a channel bandwidth) but with a spacing that can be variable to accommodate the needs of overall system. The term "contiguous" heretofore encompasses "substantially-contiguous." The term "spacing" is referred to as the frequency difference between adjacent channels. The system includes a wideband receiver having a complex mixer module for down-shifting the multiple RF channels and transforming them to an in-phase signal and a quadrature signal in the baseband or low intermediate frequency (IF) band. The system further includes a wideband analog-to-digital converter module that digitizes the in-phase and quadrature signals. The digital in-phase and quadrature signals are provided to a digital frontend module that contains a bank of complex mixers that frequency-shift the number of desired channels to a baseband where the desired channels are individually filtered.

[0009] The digital frontend module may also include a decimator module that decimates the desired RF channels by a factor M before demodulating them to a digital data stream.

[0010] In certain embodiments of the present invention, the wideband receiver system additionally includes an up-converter module having multiple complex up-mixers, each of the complex up-mixers is configured to frequency up-shift each one of the desired RF channels to a sub-portion of an IF spectrum, wherein all sub-portions of the desired channels are adjacent to each another and form a contiguous frequency band in the IF spectrum. The act of frequency shifting the desired channels to the IF spectrum allows the wideband receiver system to directly interface with commercially available demodulators. Allowing the spacing of the desired channels in the contiguous spectrum to be variable allows a system to optimize placement of these desired channels for the purposes of avoiding sensitive portions of the spectrum which may either be vulnerable to spurious signals and interference; or which may generate interference directly or as a harmonic product, to other systems.

[0011] In another embodiment of the present invention, a multi-tuner receiver system having two or more tuners is provided to receive multiple desired RF channels that extend over several non-contiguous sub-portions of a broad frequency spectrum and group them into a contiguous frequency spectrum. The multi-tuner system includes at least a first tuner that processes a first sub-portion of the broad frequency spectrum into a first in-phase signal and a first quadrature signal and a second tuner that processes a second sub-portion of the broad frequency spectrum into a second in-phase signal and a second quadrature signal. The multi-tuner receiver system further includes a first analog-to-digital converter module that digitizes the first in-phase and quadrature signals and a second analog-to-digital converter module that digitizes the second in-phase and quadrature signals. In addition, the multi-tuner system includes a first digital frontend module having a first number of complex mixers corresponding to a first number of the desired RF channels located in the first sub-portion of the broad frequency spectrum and a second digital frontend module having a second number of complex mixers corresponding to a second number of the desired RF channels located in the second sub-portion of the broad frequency spectrum. The first digital frontend module frequency shifts the first number of the desired RF channels to a first plurality of baseband signals and the second digital frontend module frequency shifts the second number of the desired RF channels to a second plurality of baseband signals.

[0012] The multi-tuner system further includes a first up-converter module having a plurality of N complex mixers, wherein N is an integer value equal to the number of desired channel. The first up-converter module frequency up-shifts the first plurality of the baseband signals to a first portion of an intermediate frequency. In addition, the multi-tuner system includes a second up-converter module that frequency up-shifts the second plurality of the baseband signals to a second portion of an intermediate frequency. The first and the second portions of the intermediate frequency are non-overlapping and located adjacent to each other to form a contiguous intermediate frequency (IF) band. The multi-tuner system further includes a digital-to-analog converter that converts the contiguous IF band to an analog waveform signal.

BRIEF DESCRIPTION OF THE DRAWINGS

[0013] FIG. 1 is a schematic block diagram of a conventional wideband tuner;

[0014] FIG. 2 is a schematic block diagram of a wideband receiver system according to an embodiment of the present invention;

[0015] FIG. 3 is a simplified circuit diagram of a complex down-mixer according to an embodiment of the present invention;

[0016] FIG. 4 is a simplified schematic block diagram of a wideband receiver system according to another embodiment of the present invention;

[0017] FIG. 5 is a simplified circuit diagram of a complex up-mixer according to an embodiment of the present invention;

[0018] FIG. 6 is a simplified schematic block diagram of a wideband multi-tuner receiver system according to an embodiment of the present invention;

[0019] FIG. 7 is a block diagram illustrating an exemplary digital front end according to an embodiment of the present invention in more detail;

[0020] FIG. 8 is a block diagram illustrating an exemplary tiled up-converter module according to an embodiment of the present invention in more detail;

[0021] FIG. 9 is a simplified block diagram of a wideband multi-tuner receiver system 900 according to an embodiment of the present invention; and

[0022] FIG. 10 is a simplified block diagram of a wideband multi-tuner receiver system 1000 according to another embodiment of the present invention.

DETAILED DESCRIPTION OF THE INVENTION

[0023] FIG. 2 is a schematic block diagram of a wideband receiver system 200 according to an embodiment of the present invention. Wideband receiver system 200 includes a radio front end 210 and a digital front end 230. Radio front end 210 may be a single very wide-band tuner receiver that captures the desired swath of channels located in non-contiguous portions of the spectrum having a frequency bandwidth BW1 120. In this example, the number of available channels in BW1 120 is assumed to be 10 with each channel occupying an 8 MHz bandwidth for a total of 80 MHz. Radio front end 210 is shown as including a low noise amplifier LNA 202 having an input terminal configured to receive an RF input signal 102. In the example shown, RF signal 102 includes four desired RF channels having the respective carrier frequency f_{rf1}, f_{rf2}, f_{rf3}, and f_{rf4} that are located in non-contiguous portions of the wide frequency spectrum BW1. It is understood, however, that spectrum BW1 120 may have any other number of desired

frequencies that are not contiguous. LNA 202 has a very low noise figure and very high linearity and a wide tuning range (i.e., very high IIP2 and IIP3 intercept points) to maximize a signal-to-noise-and distortion ratio (SNDR) at the amplifier output. LNA 202 may have a programmable gain to amplify RF signal 102 to adequate voltage levels for mixers M1 211 and M2 221.

[0024] Mixers M1 211 and M2 221 may be conventional mixers formed using, for example, differential Gilbert cells. Each of the mixers 211 and 221 multiplies (mixes) a amplified RF signal 203 with a respective first oscillator frequency signal 205 and a second oscillator frequency signal 207 to generate an in-phase signal 212 and a quadrature signal 222 that have a phase shift of 90° degree between them. Mixers 211 and 221 are identical so that the amplitude of the in-phase signal 212 and quadrature signal 222 are the same. The first and second oscillator frequencies 205 and 207 are identical and have a 90° degree phase shift generated through a 90° degree phase shifter P1 206. Synthesizer S1 may be a single local oscillator operable to generate the oscillator frequency 205 for converting the receive RF signal 102 to a zero-IF or low-IF band. Synthesizer S1 can be a coarse (large step) phase locked loop. Synthesizer S1 can also be programmable to cover the wideband frequency of the analog and digital terrestrial broadcast and/or the cable television system. The RF signal 102 may have relatively uniform signal strength in a cable network. However, its signal strength may extend in several orders of magnitude in a terrestrial broadcast system, thus, LNA 202 and/or mixers M1 211, M2 221 are required to have a relatively high dynamic range to handle the large variations in the signal strength.

[0025] In-phase signal 212 and quadrature signal 222 are further amplified and filtered by respective amplifiers V1 213, V2 223 and filters F1 215, F2 225 to generate a filtered in-phase signal 216 and a filtered quadrature signal 226. Filters F1 215 and F2 225 may be passive or active low-pass filters to filter out any unwanted frequency components of the signals 214 and 224 before digitizing them for further processing in digital front end 230. It is understood that the in-phase path 216 and the quadrature path 226 must have the same amplitude spectrum and maintain a fixed phase relationship, i.e., amplifiers V1 213, V2 223 and filters F1 215, F2 225 must be substantially identical. Because the two paths 216 and 226 are in quadrature, the spectral components from both positive and negative frequencies can be overlaid so that the bandwidth (cutoff frequency) of filters F1 215 and F2 225 can be one half of the BW1 bandwidth 120.

[0026] Analog-to-digital converters ADC1 218 and ADC2 228 are high-speed (i.e., high sampling rate) converters to maximize the dynamic range. In an exemplary application, radio front end 210 operates as a nominal zero-IF down-mixer so that signals 216 and 226 have a nominal bandwidth 290 equal to one half of the RF signal bandwidth BW1 thanks to the complex down-mixer architecture. In other embodiment, radio front end 210 operates as a low-IF down-mixer so that the nominal bandwidth 290 of signals 216 and 226 is greater than one half of the bandwidth BW1. In practice, the sampling rate of ADC1 218 and ADC2 228 is chosen to be higher than the Nyquist sampling requirement, i.e., the filtered analog quadrature signals 216 and 226 may be over-sampled in order to reduce or avoid aliasing of undesired signals into the digitized I and Q signals.

[0027] ADC1 218 generates a digital signal I 232 that is a digital representation of the analog filtered signal 216; ADC2 228 generates a digital signal Q 242 that is a digital representation of the analog filtered signal 226. Digital signals I 232 and Q 242 are then applied to a bank of N complex mixers 250, wherein N is an integer value corresponding to the number of desired RF channels located in the non-contiguous portions of the frequency spectrum BW1.It is understood that the number N can be any integer value. In one embodiment, N can be equal to the number of all available channels that exist in the licensed frequency spectrum to provide system flexibility. In other embodiments, N can be equal to the number of all receivable channels within a geographic area. In yet another embodiment, N can be an integer value less than the number of receivable channels with the geographic area to reduce system costs. In the exemplary embodiment shown in FIG. 2, the number of desired channels is 4. That is, each of the 4 complex mixers 250 mixes in-phase and quadrature signals 232 and 242 with an associated frequency to generate a corresponding baseband, which is then individually filtered, decimated and provided to an associated demodulator.

[0028] Each of the N complex mixers 250 receives the digital signals I 232 and Q 242 from ADCs 218 and 228 to extract a different one of the desired channels and frequency-shifts the extracted signals to the baseband frequency. Each of the frequency shifted desired channels 252 is filtered by an associated filter module (identified as 260a to 260n). In an embodiment, each of the filtered signals 260a to 260n may be sent directly to an associated demodulator (identified as 270a to 270n) for extracting the original information transmitted in the associated desired channel. In another embodiment, each of the filtered signals 262a to 262n is further decimated

before providing to a demodulator. A path of digital front end 230 is described in more detail below.

[0029] FIG. 3 is a simplified circuit diagram of one of the signal paths 272a to 272n of digital front end 230 shown in Figure 2 according to an embodiment of the present invention. In an embodiment, digital signal I 232 may be further filtered by a filter 311 to obtain a filtered signal 312. Similarly, digital signal Q 242 may be further filtered by a filter 321 to obtain a filtered signal 322. Thus, digital signals 312 and 322 only contain low-frequency components with undesired high-frequency components being eliminated by respective filters 311 and 321. It is noted that filtered signals 312 and 322 are interposed between the respective ADCs 218, 228 and the bank of N complex mixers 250.

[0030] Mixer 300, which represents one of the N complex mixers 250, includes four multipliers 313, 315, 323, and 325. Multipliers 313 and 315 multiply the filtered signal 312 with respective $\cos(\omega_{ci}t)$ and $\sin(\omega_{ci}t)$ signals and generate respective products 314 and 316. Similarly, multipliers 323 and 325 multiply the filtered Q signal 322 with respective $\cos(\omega_{ci}t)$ and $\sin(\omega_{ci}t)$ signals and generate respective products 324 and 326. An adder 317 sums the products 314 and 326 to generate a frequency-shifted signal I 318. An adder 327 sums the products 324 and 316 to generate a frequency-shifted signal Q 328. Basically, complex mixer 300 causes a frequency shift of the filtered components 312 and 322 to respective baseband signals 318 and 328 in the digital domain according to the operation:

$$Y(t) = X(t) * e^{-j\omega_c t} \qquad (1)$$

or taken the Fourier transform, we obtain:

$$Y(\omega) = X(\omega - \omega_c) \qquad (2)$$

[0031] Multipliers 313, 315, 323, and 325 are identical digital multipliers. In an embodiment, a numerically controlled oscillator with quadrature output generates the $\cos(\omega_{ci}t)$ and $\sin(\omega_{ci}t)$ signals. Numerically controlled oscillators (NCO) can be implemented using a phase accumulator and a look-up table. NCOs are known to those of skill in the art and will not be described herein. The frequency ω_{ci} is so chosen that each one of the desired channels embedded in the digital signals I 232 and Q 242 will be downshifted to the baseband. In the given example shown in FIG. 2, the bank of N complex mixers will have four complex mixers,

each one of the N (i.e., four) complex mixers is coupled to an individual NCO having a distinct frequency ω_{ci} so that when mixing the filtered digital I and Q signals 312 and 322 with that frequency, each one of the complex mixers will generate the signals I (318) and Q (328) of a corresponding one of the desired channels at the baseband.

[0032] In an embodiment, baseband signals 318 and 328 are further individually filtered by respective filters 330 and 340 that are identified as one of the filters 260a-n in FIG. 2. Filters 330 and 340 may be band-pass or low-pass filters having a narrow bandwidth equal to the bandwidth of a desired channel. In certain embodiments, filters 330 and 340 can be analog passive or active low-pass or complex band-pass filters such as polyphase filters. In another embodiment, filters 330 and 340 can be digital low-pass filters, such as finite impulse response (FIR) filters to eliminate high frequency components that may be aliased back to the baseband signals Ii (332) and Qi (342) when decimated by subsequent decimator 350.

[0033] The reduced sampling rate of the N desired baseband channels will be sent as a serial or parallel digital data stream to a demodulator using a serial or parallel data interface according to commonly known methods, as shown in FIG. 2. This approach provides several advantages over conventional tuner architectures. First, it eliminates the need of expensive data conversion, filtering and channel selection on the demodulator side. Second, it removes undesired channels from the signal path at an early stage, thus relieves the large dynamic range requirement in the demodulator.

[0034] FIG. 4 shows a simplified schematic block diagram of a wideband receiver system 400 according to another embodiment of the present invention. Wideband receiver system 400 includes a radio front end 410, a digital front end 430, a tiled up-conversion module 450, and a summing digital-to-analog converter module DAC 470. Radio front end 410 includes a low noise amplifier LNA1 that receives an RF input signal 102 and provides an amplified RF signal 403 to mixers M1 411 and M2 421. Mixer M1 411 is coupled to an oscillator frequency 405 of a synthesizer S1 whereas mixer M2 421 is coupled with the oscillator frequency 405 via a phase shifter P1 406 that generates a 90° degree phase-shift to the oscillator frequency 405. Mixers M1 411 and M2 421 generate respective in-phase signal 412 and quadrature signal 422 that are further amplified by respective amplifiers V1 413 and V2 423. The amplified in-phase and quadrature signals 414, 424 are then filtered by filters F1 415 and F2 425 to eliminate undesired frequency components that would be aliased back to the in-phase and quadrature signals when

digitally sampled by subsequent analog-to-digital converters ADC1 418 and ADC2 428. Digital signals I 422 and Q 442 at the input of digital front end 430 are digital representations of the filtered analog in-phase and quadrature signals 416, 426 before the ADCs. Digital front end 430 include a bank of N complex mixers 432 comprising 432a to 432n identical mixers, where N is an integer value corresponding to the number of the desired channels located in non-contiguous portions of the frequency spectrum. Each of the N complex mixers 432a to 432n frequency down-converts signals I 432 and Q 442 to an associated baseband. Each of the frequency down-converted I and Q signals are coupled to respective low-pass, band-pass, or decimating filters 434. In this regard, the radio front end 410 and the digital front end 430 are similar to respective radio front end 210 and digital front end 230 of FIG. 2 that have been described in detail above.

[0035] In an alternative embodiment of the present invention, the N filtered and decimated channels 438a to 438n (where indices a to n correspond to the associated number of desired channels) are not provided to a demodulator for demodulation. Instead, the N filtered and decimated channels 438a to 438n are further frequency up-converted to an intermediate frequency (IF) spectrum. In order to achieve that, the N filtered and decimated channels are coupled to a tiled up-conversion module 450 that includes a bank of N complex up-mixers, where N is an integer value correspond to the number of desired received channels. The N complex up-mixers include identical digital mixers 452a to 452n that will be described further in detail below with reference to FIG. 5. The N up-shifted channels are then filtered by a subsequent bank of channel filters 454 that, in an embodiment, comprises N individual finite impulse response (FIR) filters. The N filtered channels are then digitally combined and converted to the analog domain by a summing digital-to-analog converter module DAC 470. The N up-shifted channels are adjacent to each other and form a contiguous or substantially-contiguous set of channels 475 in the IF spectrum centered around f_{if} as illustrated in FIG. 4. In an embodiment, the spectra of the mixed products are spaced in such a way so as to avoid overlap with known frequency bands containing potential or actual interferers. In another embodiment, the spectra of the mixed products are spaced in such a way so as to avoid overlap with frequency bands that might introduce interference to other systems. In general, because the bandwidth BW2 is substantially lower than BW1, the IF frequency f_{if} can be set proportionally lower, e.g., typically about 16 MHz to accommodate the spectrum of BW2 of up to 32 MHz (corresponding to the total bandwidth of the four desired channels, each having a bandwidth of 8 MHz in this example).

[0036] The up-conversion approach of FIG. 4 provides several advantages over conventional tuner architectures. First, it allows the demodulator to operate the data converter at a lower data rate and with lower resolution (fewer bits) due to the fact that the contiguous channels have a narrower bandwidth. Second, the up-conversion approach provides full compatibility with existing demodulators that require an analog IF signal. Third, it removes undesired channels from the signal path at an early stage, thus relieves the requirement of a high dynamic range requirement of the demodulator's analog-to-digital converter and the demodulator itself.

[0037] FIG. 5 shows a simplified exemplary circuit diagram of a complex up-mixer 500 according to an embodiment of the present invention. Up-mixer 500 is one of the N complex up-mixers 452a to 452n in tiled up-conversion module 450 shown in FIG. 4. Up-mixer 500 includes filter 510 and 520 configured to eliminate unwanted frequency components present in respective input signals I 501 and Q 502. Filtered signals 512 and 522 are provided to up-mixers UMI 515 and UMQ 525 that multiply the filtered signals 512 and 522 with respective $\cos(\omega_u t)$ and $\sin(\omega_u t)$. The products 516 and 526 are summed in an adder 530 to generate an IF signal 532 according to the following equation:

$$IF(t) = I(t) * \cos(\omega_u t) + Q(t) * \sin(\omega_u t) \qquad (3)$$

[0038] Up-mixers UMI 515 and UMQ 525 are identical digital multipliers that multiply the respective filtered signal 512 and 522 with a cosine function 505 and a sine function 506 that can be generated from a NCO using a digital phase accumulator and a look-up table.

[0039] As described above, TV channels are grouped into multiple frequency bands in North America. For example, channels 2 through 6 are grouped in VHF-low band (aka band I in Europe), channels 7 through 13 in VHF-high band (band III), and channels 14 through 69 in UHF band (bands IV and V). In order to receive such a wide frequency spectrum, the low noise amplifier and mixer must have very low noise, wide tuning range and high linearity as described above in the wideband receiver systems 200 and 400. However, a wideband receiver having a single tuner with high sensitivity may have a high power consumption. For certain applications, it may be advantageous to use multiple tuners that are optimized for a given frequency band, such as a dedicated tuner for the low VHF band, another dedicated tuner for the high VHF band and the UHF band, and yet other dedicated tuners for receiving the digital video broadcasting (DVB) via satellite (DVB-S), via cable (DVB-C), or terrestrial digital video broadcasting

(DVB-T). The multi-tuner approach may also be advantageously applied to cable networks that carry TV programs on an 88 MHz to 860 MHz according to the Data Over Cable Service Interface Specification (DOCSIS) protocol.

[0040] FIG. 6 shows a simplified schematic block diagram of a wideband multi-tuner receiver system 600 according to an embodiment of the present invention. In an embodiment, multi-tuner system 600 includes low noise amplifier A1602 for receiving an RF input signal 601. Amplifier A1 602 is coupled to at least a tuner1 610 and a tuner2 720. In another embodiment, multi-tuner system 600 may not include amplifier 602 so that RF input signal 601 can be received directly at each tuner 610 and 720.

[0041] Tuner1 610 includes an amplifying filter AF1 613 that filters and amplifies a first portion BWtuner1 604 of a broad frequency spectrum 608 that contains a first plurality of RF channels 606 including desired channels 607 having respective channel frequencies f_{rf1} and f_{rf2}. The first portion of the broad frequency spectrum BWtuner1 604 is then frequency down-converted to a low-IF or zero-IF in-phase signal I1 612 and a quadrature signal Q1 622 through respective mixer M1 611 and M2 621. Signals I1 612 and Q1 622 are further amplified and low-pass filtered before applying to respective analog-to-digital converters ADC1 618 and ADC2 628 that convert analog signals Ia1 616 and Qa1 626 to respective digital in-phase signal Id1 631 and digital quadrature signal Qd1 641. Because tuner1 610 only covers a portion BWtuner1 604 of the entire frequency spectrum 608 having fewer channels, the ADC1 618 and ADC2 628 can be slower-speed analog-to-digital converters with a large number of bits, i.e., large dynamic range.

[0042] Digital signals Id1 631 and Qd1 641 are then provided to a digital front end DFE 630 that includes a first bank of N complex mixers 632 and channel and decimating filters 634. The first bank of N complex filters 632 has N identical complex mixers, where N is an integer value equal to the number of desired channels located in the first portion BWtuner1 604 of the broad frequency spectrum 608. In an embodiment, each one of the first bank of N complex mixers includes four digital mixers that multiply digital stream Id1 631 and Qd1 641 with respective digitized cosine function and sine function to generate the sum and difference frequency components, as shown in FIG. 3. The digitized cosine and sine frequency, i.e., the mixer frequency is so chosen so that when mixing signals Id1 631 and Qd1 641 will move them to a baseband or a low-IF band. In an embodiment, channel and decimating filters have similar structures as filters 330 and 340 and demodulator 350 as shown in FIG. 3. That is, channel and

decimating filters include digital low-pass filters 330 and 340 that eliminates unwanted high frequency components of the baseband signals I and Q prior to applying them to a decimator 350 (FIG. 3) that reduces the sample frequency without any loss of information since Id1 631 and Qd1 641 are sampled at a much higher frequency by the respective ADC1 618 and ADC2 628.

[0043] The decimated desired channels are then provided to an up-converter module 650 that includes a bank of N up-mixers. The bank of N up-mixers includes N identical up-mixers whose structure is shown in FIG. 5. In an embodiment, N is an integer value equal to the number of desired channels present in BWtuner1 604. Each one of the up-mixer frequency-shifts the baseband signals I and Q of each one of the desired channels to an appropriate portion of the intermediate frequency band according to Equation (3). In other words, the bank of N up-mixers is "frequency multiplexing" the desired channels onto a first portion 682 of an IF band 686.

[0044] Similarly, tuner2 720 includes an amplifying filter AF2 713 that is configured to receive a second portion BWtuner2 704 of the broad frequency spectrum 608. The second portion 704 contains a second plurality of RF channels 706 including a second number of desired channels. In the exemplary illustration of FIG. 6, the second portion 704 has a frequency bandwidth of BWtuner2 that contains desired channels 707 having respective channel frequencies f_{rf3} and f_{rf4}. Tuner2 720 includes elements such as mixers M3 711, M4 721, amplifiers V3 714, V4 724, filters F3 715, F4 725 and analog-to-digital converters ADC3 731 and ADC4 741 that are substantially the same as the like-named elements of the signal path of tuner1 610. Thus, redundant description is omitted herein.

[0045] Digital in-phase signal Id2 731 and digital quadrature signal Qd2 741 are then provided to digital front end 740. Digital front end 740 includes a bank of L complex filters, where L is an integer value equal to the number of desired channels in the second portion BWtuner2 704 of the broad frequency spectrum 608. Each one of the bank of L complex filters is a digital complex mixer configured to transform the signals Id2 731 and Qd2 741 to baseband signals that are further filtered by individual digital low-pass filters such as FIR filters before decimated by a subsequent decimator. The elements of digital front end 740 are substantially similar to those described in digital front end 630. Thus, redundant description is omitted herein.

[0046] The decimated baseband I and Q channels are further provided to a subsequent up-conversion module 760 that performs a function substantially similar to that of the up-conversion module 650 already described above. The outputs of up-conversion module 650 and 760 can be

tiled to generate a contiguous set of IF frequencies 682, 684 centered at f_{if} 686. In an embodiment, the outputs of up-conversion module 650 and 760 are digitally summed and converted to an analog signal by summing DAC 670. In another embodiment, the up-conversion modules 650 and 760 and the digital summing function 672 can be performed using an inverse discrete Fourier transform or an inverse Fast Fourier transform operation.

[0047] The multi-tuner architecture provides the flexibility that multiple commercially available tuners can be used without the need of designing a wideband tuner. For example, a tuner designed for a terrestrial broadcast digital TV can be used together with a tuner dedicated to receiving a cable signal and/or a tuner for receiving a satellite broadcast signal. The multi-tuner receiver system provides an additional advantage that other tuners can be added quickly to the system to accommodate any future applications. Additionally, the multi-tuner architecture allows the use of slower speed (i.e., lower cost) analog-to-digital converters with a larger number of bits for achieving large dynamic range.

[0048] FIG. 7 shows a block diagram of an exemplary digital front end of the invention in more detail. In an embodiment, in-phase signal Id2 731 and quadrature signal Qd2 741 at the output of respective ADC converters 718 and 728 are provided to each of the L complex mixers 732 comprising mixers 732A to 732L. A more detailed description of each of L complex mixers is shown in FIG. 3. Mixer 732A multiplies Id2 731 and Qd2 741 with a cosine signal and a sine signal that are generated from an NCO1 and produces an I-732A signal and a Q-732A signal that are further individually filtered by an FIR filter before decimating. The bank of L complex mixers corresponds to the block 732 in FIG. 6; and the set of FIR filters and decimator corresponds to the block 734 in FIG. 6. Each decimated pair of I-732i/M in the baseband, where the index "i" is from A to L, is further provided to a subsequent up-mixer for frequency-shifting to an intermediate frequency as shown in FIG. 8.

[0049] FIG. 8 shows an exemplary embodiment of a bank of L complex up-mixers according to the present invention. Each decimated pair of complex signals I-732i/M and Q-732i/M is provided to an associated complex up-mixer, whose frequency is so chosen that when mixing with the pair of complex signals I-732i/M and Q-732i/M will generate an associated channel at a predetermined sub-portion of the intermediate frequency band 686 (FIG. 6). A more detailed schematic block of one of the L up-mixers is described above together with FIG. 5.

[0050] FIG. 9 is a simplified block diagram of a wideband multi-tuner receiver system 900 according to an embodiment of the present invention. In an embodiment, system 900 includes a crossbar switch 910 having at least an input terminal 912 configured to receive signals from an analog-to-digital converter (ADC) 912 and an input terminal 922 configured to receive signals from an ADC 922. Crossbar switch 910 also includes an output terminal 924 that is coupled to a digital front end 930. In an embodiment, input terminals 912 and 922 of crossbar switch 910 have P inputs, where P is an integer value that is equal to the total number of desired channels received by tuner1 610 and tuner2 720. Output terminal 924 of crossbar switch 910 have Q outputs, where Q is an integer value that is equal to the total number of desired channels received by tuner1 610 and tuner2 720.

[0051] In an embodiment, digital front end 930 may include a bank of R complex mixers that frequency shifts the received channels to a baseband. Digital front end 930 may combine digital front end 630 and 740 shown in FIG. 6. Similarly, a tiled up-conversion module 950 may include up-converter modules 650 and 760 of FIG. 6.

[0052] System 900 further includes a summing DAC that operates similarly as summing DAC 470 and 670 that have been described in detail in relation with respective FIG. 4 and FIG. 6 above. Thus, redundant description is omitted herein.

[0053] FIG. 10 is a simplified block diagram of a wideband multi-tuner receiver system 1000 according to another embodiment of the present invention. System 1000 includes at least tuner1 610 coupled with digital front end 630 through an analog-to-digital converter 620 and tuner2 720 coupled with digital front end 740 through an analog-to-digital converter 730. System 1000 further includes a crossbar switch 1010 that is interposed between digital front ends 630, 740 and up-conversion modules 650, 760. Crossbar switch 1010 includes an input terminal 1012 having S inputs coupled with DFE 630 and an input terminal 1022 having T inputs coupled with DFE 740. In an embodiment, S is an integer value equal to the number of desired channels processed in DFE 630 and T is an integer value equal to the number of desired channels processed in DFE 740. Crossbar switch 1010 further includes an output terminal 1024 having U outputs coupled with up-converter module 650 and an output terminal 1024 having V outputs coupled with up-converter module 760. In an embodiment, the total number of the outputs U and V is equal to the sum of the inputs S and T. Thus, crossbar switch 1010 allows the routing of any channel from either DFE 630 or DFE 740 to up-converters 650 or 760. It is understood

that system 1000 is not as flexible as system 900 because DFE 630 and DFE 740 are already pre-assigned to respective tuner1 (610) and tuner2 (720). However, this pre-assigned arrangement allows a simpler implementation of crossbar switch 1010 that operates at lower speeds.

[0054] While several embodiments in accordance with the present invention have been described, it is to be understood that the above description is intended to be illustrative and not restrictive. Many embodiments will be apparent to those of skill in the art upon reviewing the above description. The scope of the invention should, therefore, be determined not with reference to the above description, but instead should be determined with reference to the appended claims along with their full scope of equivalents.

WHAT IS CLAIMED IS:

1. A wideband receiver system comprising:

a wideband receiver configured to concurrently receive a plurality of desired RF channels; said wideband receiver comprising:

a mixer module coupled to the plurality of desired RF channels and having a first mixer configured to generate an in-phase signal and a second mixer configured to generate a quadrature signal;

a wideband analog-to-digital converter (ADC) module having a first wideband ADC coupled with the in-phase signal and configured to generate a digitalized in-phase signal and a second wideband ADC coupled with the quadrature signal and configured to generate a digitalized quadrature signal; and

a digital frontend (DFE) module having a plurality of complex mixers coupled to the digital in-phase and quadrature signals, each one of the plurality of complex mixers frequency-shifting a different one of the plurality of the desired RF channels to a baseband signal.

2. The system of claim 1 further comprises a local oscillator having an oscillator frequency centered around the plurality of the desired RF channels.

3. The system of claim 2 wherein the local oscillator comprises a phase-locked loop.

4. The system of claim 1 wherein the plurality of desired RF channels conform to a Data Over Cable Service Interface Specification (DOCSIS) protocol.

5. The system of claim 1 wherein each one of the plurality of complex mixers comprises a pair of digital multipliers, each pair of the digital multipliers is coupled to a numerically controlled oscillator.

6. The system of claim 1 wherein the DFE module further comprises a plurality of channel filters, each one of the plurality of channel filters is coupled to each one of

the plurality of complex mixers and configured to filter one of the plurality of the desired channels.

7. The system of claim 6 wherein each one of the plurality of channel filters is a finite impulse response filter.

8. The system of claim 1 wherein the DFE module further comprises a decimator module configured to decimate each one of the plurality of the desired channels in the baseband.

9. The system of claim 1 wherein the DFE module further comprises a digital interface module configured to communicate the decimated plurality of the desired channels to a demodulator.

10. The system of claim 1 further comprising:

an up-converter module configured to frequency-shift the plurality of desired RF channels in the baseband to an intermediate frequency band.

11. The system of claim 10 wherein the up-converter module comprises a plurality of N up-mixers having a plurality of associated oscillator frequencies,

wherein N is an integer value equal to the plurality of the desired RF channels;

wherein the plurality of associated oscillator frequencies are so chosen so that when mixing with the plurality of desired channels in the baseband, the mixed products occupy a contiguous frequency spectrum, or a substantially-contiguous frequency spectrum with one or more spacings between the desired channels,

wherein the one or more spacings are variable, and

wherein the one or more spacings are smaller than or comparable to a channel bandwidth, or small measured as a fraction of the bandwidth of the first and second wideband ADCs.

12. The system of claim 11 wherein the mixed products comprise spectra that are spaced in such a way so as to avoid overlap with known frequency bands containing potential or actual interferers.

13. The system of claim 11 wherein the mixed products comprise spectra that are spaced in such a way so as to avoid overlap with known frequency bands that introduce interference to other systems.

14. The system of claim 11 wherein each one of the plurality of N up-mixers is a digital complex mixer and each one of the plurality of associated oscillator frequencies is generated by a numerically controlled oscillator.

15. The system of claim 1 further comprises a digital-to-analog converter configured to convert the contiguous group of channels in the intermediate frequency spectrum to an analog waveform.

16. A multi-tuner receiver system for receiving a plurality of desired radio frequency (RF) channels that extend over multiple non-contiguous portions of a broad frequency spectrum and grouping them in a contiguous frequency spectrum, the system comprising:

a first tuner configured to receive a first portion of the broad frequency spectrum, the first tuner includes a first mixer module coupled to a first oscillator and is configured to generate a first in-phase signal and a first quadrature signal;

a second tuner configured to receive a second portion of the broad frequency spectrum, the second tuner includes a second mixer module coupled to a second oscillator and is configured to generate a second in-phase signal and a second quadrature signal;

a first analog-to-digital converter module configured to digitize the first in-phase and quadrature signals;

a second analog-to-digital converter module configured to digitize the second in-phase and quadrature signals;

a first digital frontend (DFE) module having a first bank of down-mixers coupled to the first digital in-phase and quadrature signals, each of the first bank of down-mixers is configured to frequency shift one of the desired RF channels in the first portion of the broad frequency spectrum; and

a second digital frontend (DFE) module having a second bank of down-mixers coupled to the second digital in-phase and quadrature signals, each of the second bank of down-

mixers is configured to frequency shift one of the desired RF channels in the second portion of the broad frequency spectrum;

wherein the first DFE module frequency-shifts the desired RF channels in the first portion of the broad frequency spectrum to a first portion of a baseband signal;

wherein the second DFE module frequency-shifts the desired RF channels in the second portion of the broad frequency spectrum to a second portion of the baseband signal.

17. The multi-tuner receiver system of claim 16 further comprising a crossbar switch interposed between the first and second analog-to-digital converter modules and the first and second DFE modules.

18. The multi-tuner receiver system of claim 16 further comprises:

a first up-converter module having a first bank of up-mixers coupled to the first portion of the baseband signal and configured to frequency shift the first portion of the baseband signal to a first portion of an intermediate frequency spectrum;

a second up-converter module having a second bank of up-mixers coupled to the second portion of the baseband signal and configured to frequency shift the second portion of the baseband signal to a second portion of the intermediate frequency spectrum; and

a digital-to-analog converter configured to convert the first and second portions of the intermediate frequency spectrum to an analog waveform signal.

19. The multi-tuner receiver system of claim 18 further comprising a crossbar switch interposed between the first and second DFE modules and the first and second up-converter modules.

20. The multi-tuner receiver system of claim 16 wherein the first and second portions are adjacent to each other and non-overlapping.

21. The multi-tuner receiver system of claim 16 wherein each one of the first bank of down-mixers comprises a pair of digital multiplier having an input terminal coupled to a numerically controlled oscillator.

22. The multi-tuner receiver system of claim 16 wherein the first DFE module further comprises a plurality of channel filters, each one of the plurality of channel filters is

coupled to each one of the first bank of down-mixers and configured to filter one of the frequency down-shifted RF channels.

23. The multi-tuner receiver system of claim 16 wherein the plurality of desired RF channels conform to one of a digital video broadcasting (DVB) standard.

24. The multi-tuner receiver system of claim 16 wherein the plurality of desired RF channels conform to a Data Over Cable Service Interface Specification (DOCSIS) protocol.

25. The multi-tuner receiver system of claim 16 wherein the plurality of RF channels conform to a television broadcasting standard.

26. A method of receiving a plurality of radio frequency (RF) channels including a number of desired channels that are located in non-contiguous portions of a frequency spectrum and grouping the desired channels in a contiguous frequency spectrum, the method comprising:

concurrently receiving the plurality of RF channels;

producing an in-phase signal and a quadrature signal by mixing the plurality of RF channels with a first oscillator frequency and a second local frequency;

digitizing the in-phase and quadrature signals; and

frequency down-shifting the digital in-phase and quadrature signals to a baseband signal using a number of complex mixers,

wherein the first and second oscillator frequencies are identical and have a phase shift of 90° degree between them,

wherein the number of complex mixers correspond to the number of desired channels.

27. The method of claim 26 further comprises:

frequency up-shifting the baseband signal to an intermediate frequency; and

converting the frequency up-shifted baseband signal to an analog waveform.

ABSTRACT

A wideband receiver system is provided to concurrently receive multiple RF channels including a number of desired channels that are located in non-contiguous portions of a radio frequency spectrum and to group the number of desired channels into a contiguous frequency band. The system includes a wideband receiver having a complex mixer for down-shifting the multiple RF channels and transforming them to an in-phase signal and a quadrature signal in the baseband. The system further includes a wideband analog-to-digital converter module that digitizes the in-phase and quadrature signals and a digital frontend module that transforms the digital in-phase and quadrature signals to baseband signals that contains only the number of desired RF channels that are now located in a contiguous frequency band. An up-converter module up-shifts the baseband signals to a contiguous band in an IF spectrum so that the system can directly interface with commercially available demodulators.

65607914V.1

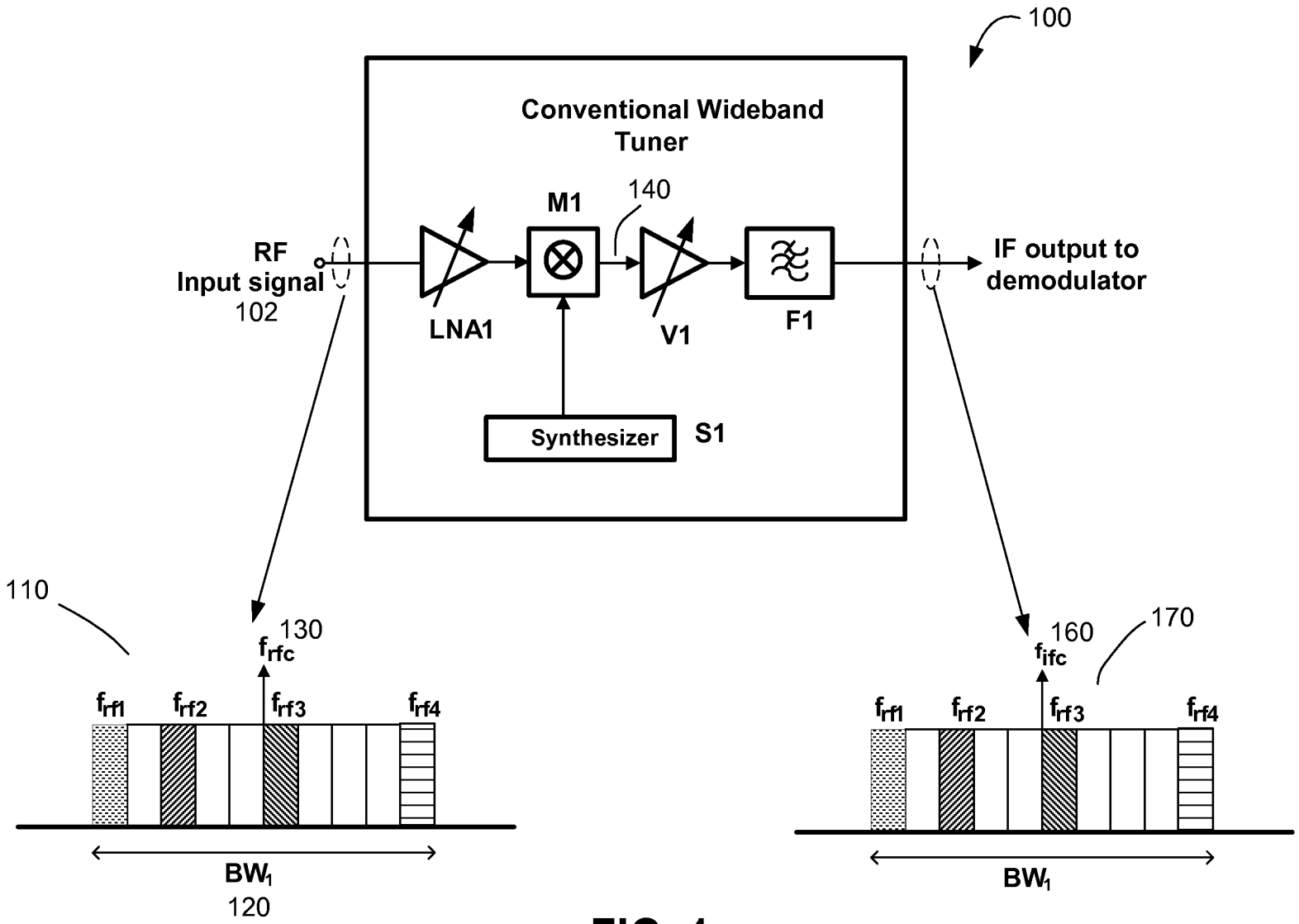

FIG. 1
(Prior Art)

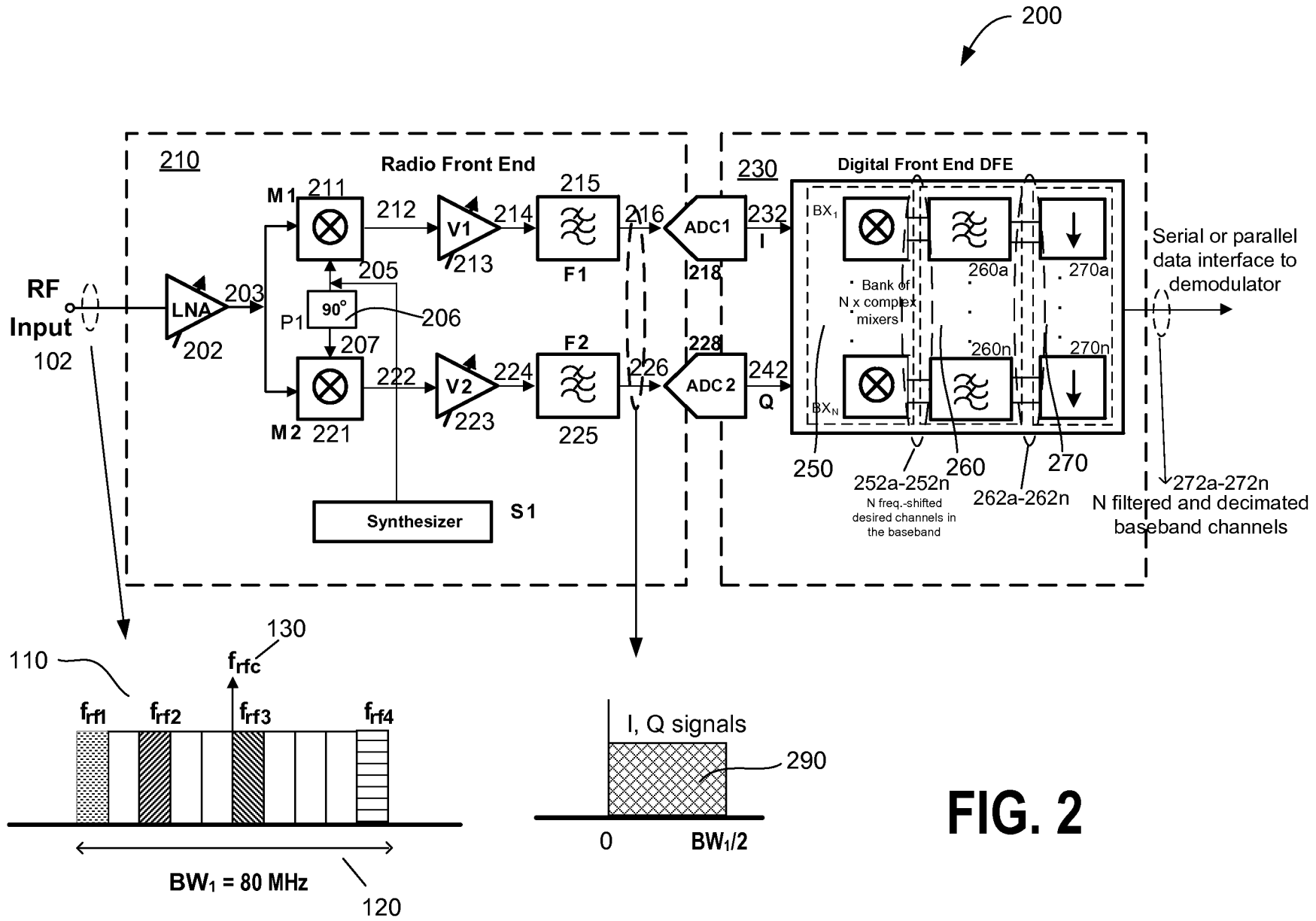
200
210
Radio Front End
RF Input
102
LNA
202
203
M1
211
212
V1
213
214
215
F1
216
ADC1
218
232
I
P1
90°
205
206
207
M2
221
222
V2
223
224
F2
225
226
ADC 2
228
242
Q
Synthesizer
S1
230
Digital Front End DFE
BX1
BXN
Bank of N x complex mixers
260a
260n
270a
270n
250
252a-252n
N freq.-shifted desired channels in the baseband
260
262a-262n
270
272a-272n
N filtered and decimated baseband channels
Serial or parallel data interface to demodulator
110
frf1
frf2
frfc
130
frf3
frf4
BW1 = 80 MHz
120
I, Q signals
290
0
BW1/2

FIG. 2

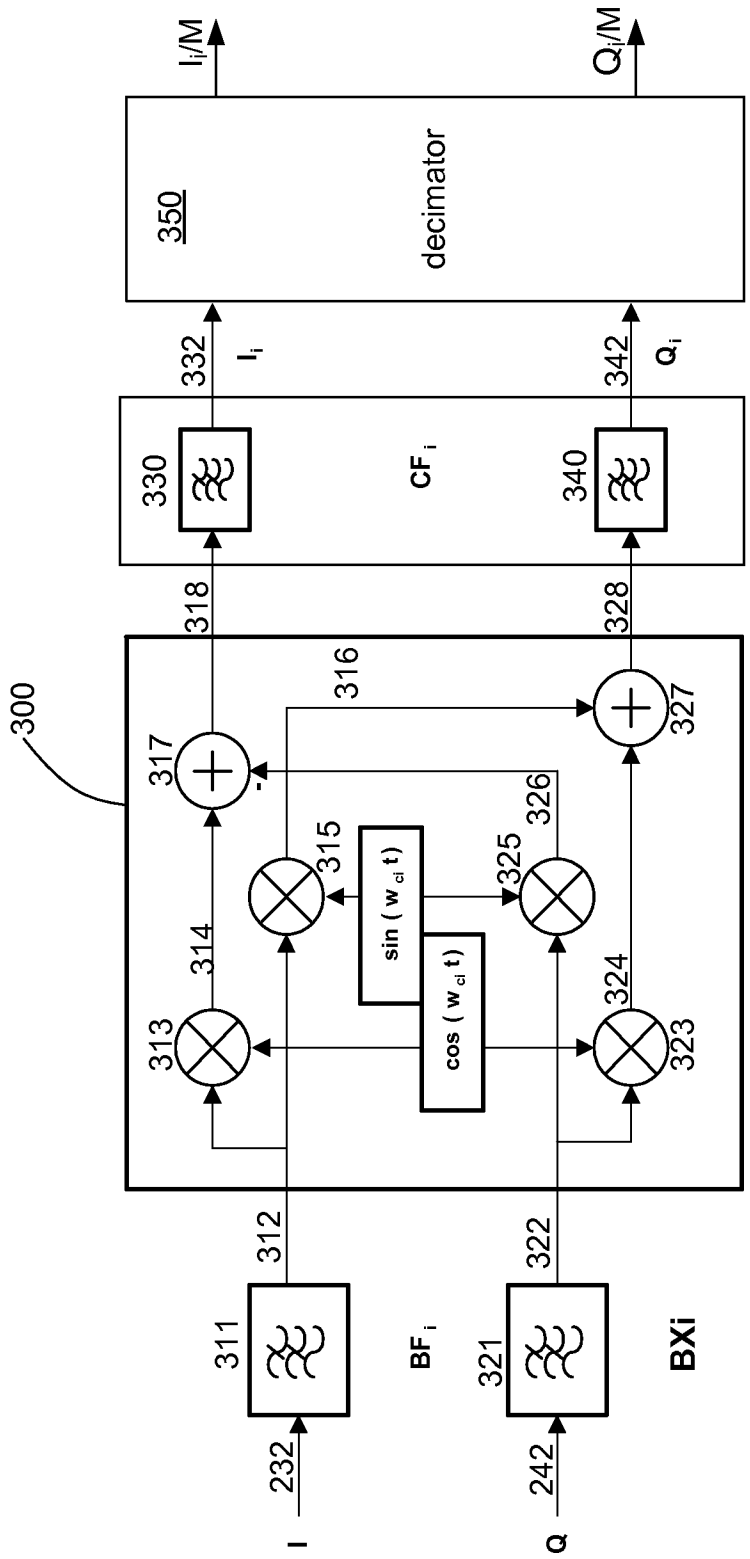

I
Q
232
242
311
321
BF i
BXi
312
322
300
313
314
315
316
317
318
323
324
325
326
327
328
sin (w ci t)
cos (w ci t)
330
340
CF i
332
342
I i
Q i
350
decimator
I i/M
Q i/M

FIG. 3

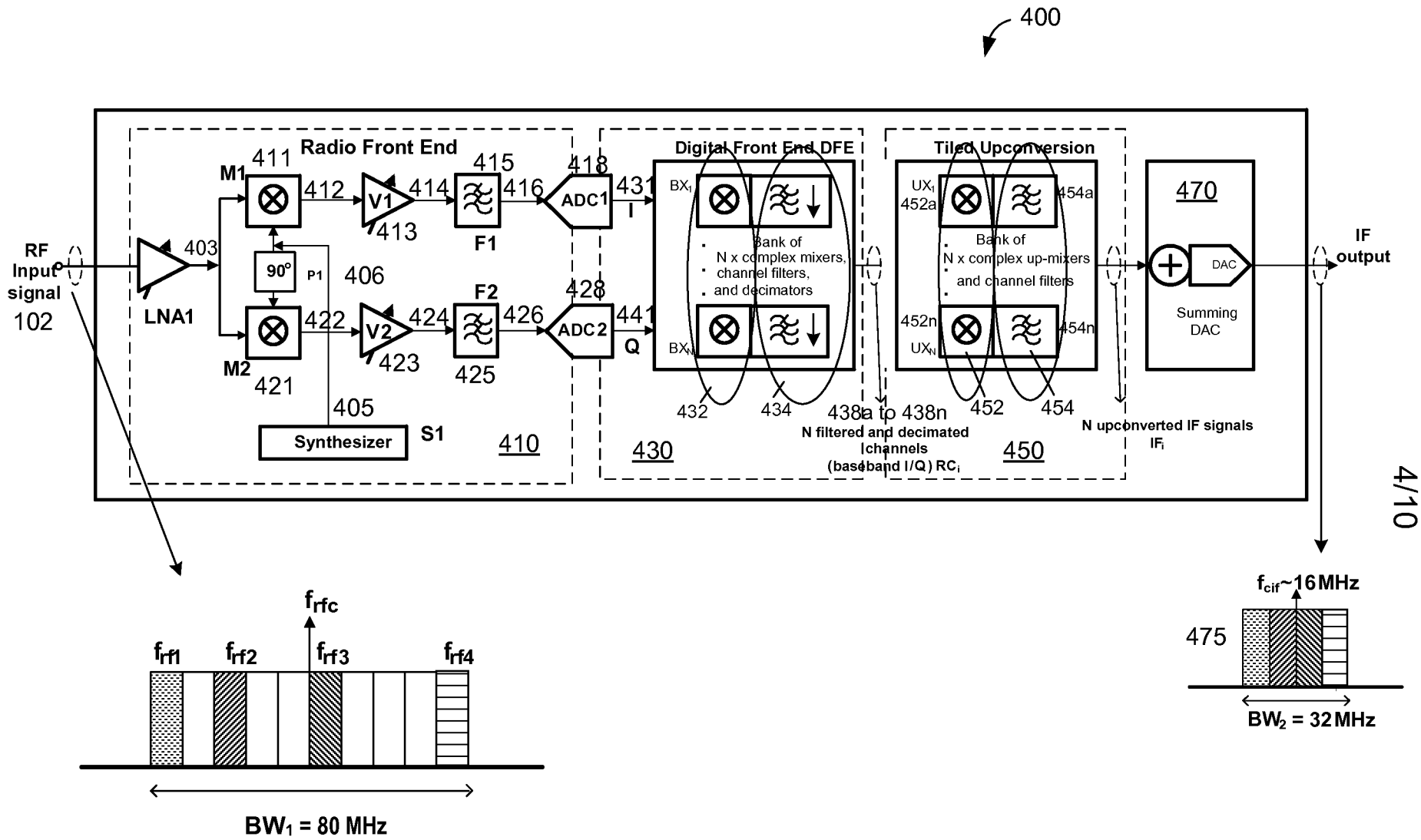
400
Radio Front End
Digital Front End DFE
Tiled Upconversion
RF Input signal
102
LNA1
403
M1
411
412
V1
413
414
415
F1
416
ADC1
418
431
I
M2
421
422
V2
423
424
F2
425
426
ADC2
428
441
Q
90°
P1
406
405
Synthesizer
S1
410
BX1
BXN
Bank of
N x complex mixers,
channel filters,
and decimators
430
432
434
438a to 438n
N filtered and decimated
Ichannels
(baseband I/Q) RCi
UX1
452a
454a
452n
UXN
454n
Bank of
N x complex up-mixers
and channel filters
450
452
454
N upconverted IF signals
IFi
470
DAC
Summing
DAC
IF output
frfc
frf1
frf2
frf3
frf4
BW1 = 80 MHz
fcif~16MHz
475
BW2 = 32MHz

FIG. 4

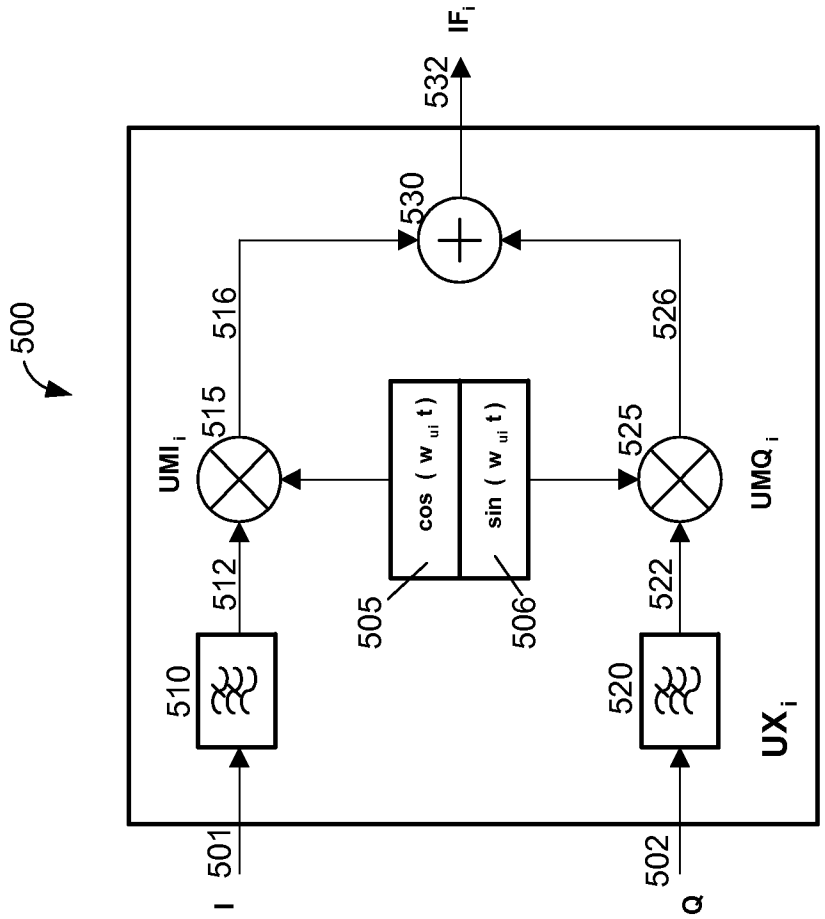
500
I
501
510
512
UMI$_i$
515
516
Q
502
520
522
UMQ$_i$
525
526
cos (w$_{ui}$ t)
sin (w$_{ui}$ t)
505
506
530
532
IF$_i$
UX$_i$

FIG. 5

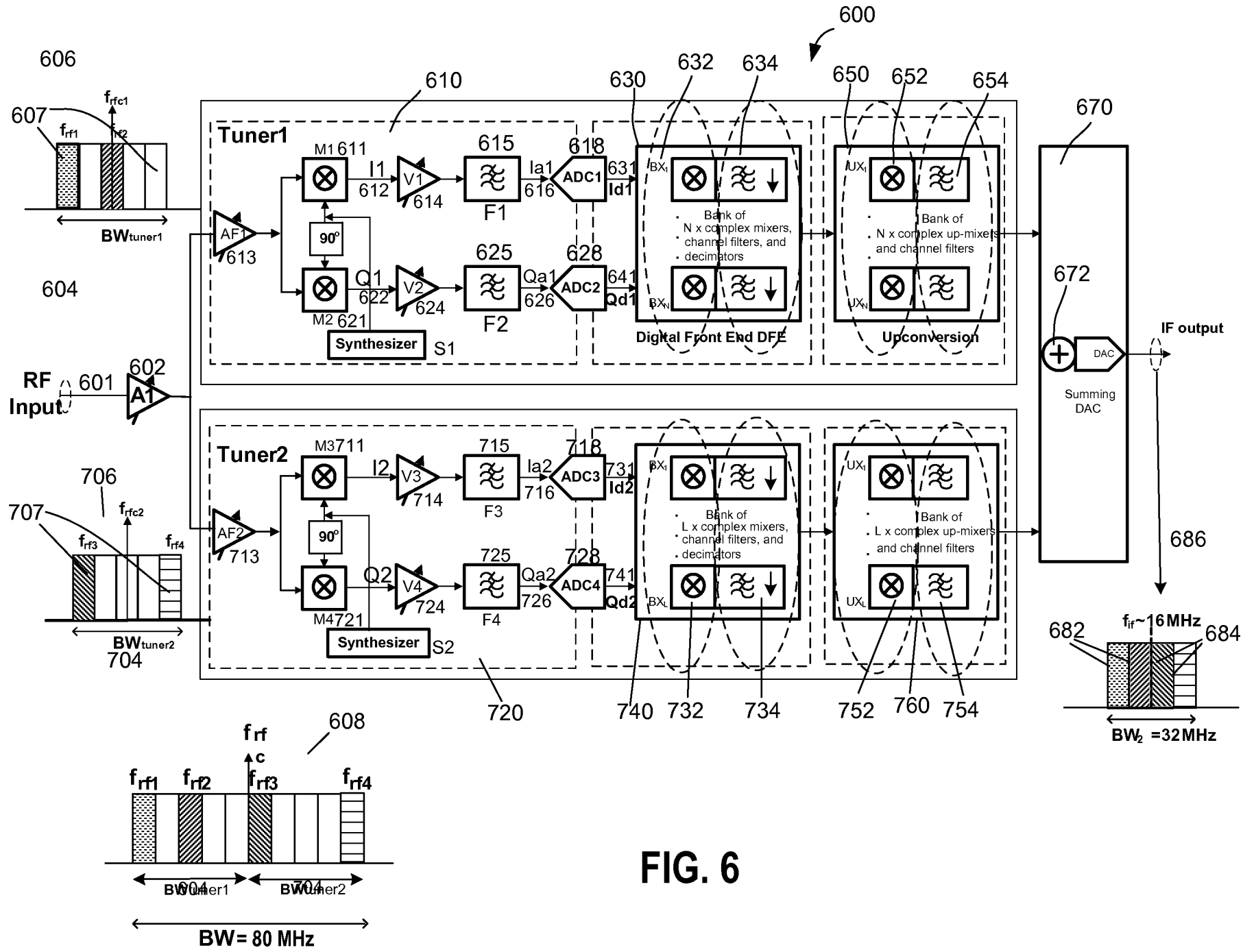
600
606
607
f_{rfc1}
f_{rf1}
f_{rf2}
BW_{tuner1}
604
610
Tuner1
M1 611
I1
612
V1
614
615
F1
Ia1
616
618
ADC1
631
Id1
AF1
613
90°
M2 621
Q1
622
V2
624
625
F2
Qa1
626
628
ADC2
641
Qd1
Synthesizer
S1
630
632
634
650
652
654
Bank of
N x complex mixers,
channel filters, and
decimators
Digital Front End DFE
Bank of
N x complex up-mixers
and channel filters
Upconversion
670
672
DAC
Summing
DAC
IF output
686
RF
Input
601
602
A1
Tuner2
M3711
I2
V3
714
715
F3
Ia2
716
718
ADC3
731
Id2
AF2
713
90°
M4721
Q2
V4
724
725
F4
Qa2
726
728
ADC4
741
Qd2
Synthesizer
S2
706
707
f_{rfc2}
f_{rf3}
f_{rf4}
BW_{tuner2}
704
720
740
732
734
752
760
754
682
f_{if}~16MHz
684
BW_2 =32MHz
608
f_{rfc}
f_{rf1}
f_{rf2}
f_{rf3}
f_{rf4}
BW_{tuner1}
BW_{tuner2}
BW= 80 MHz

FIG. 6

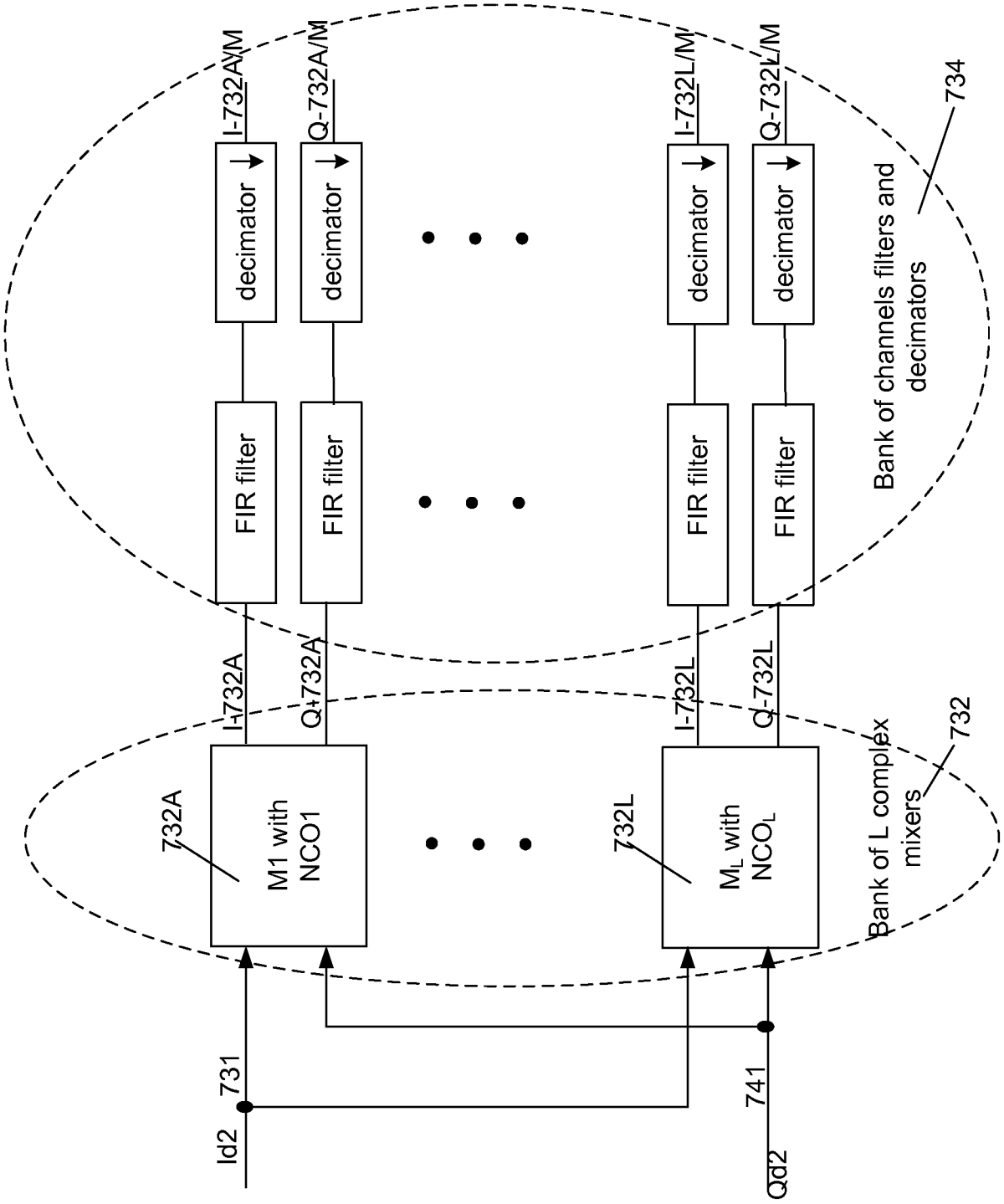
I-732A/M
Q-732A/M
I-732L/M
Q-732L/M
decimator
decimator
decimator
decimator
FIR filter
FIR filter
FIR filter
FIR filter
Bank of channels filters and decimators
734
I-732A
Q-732A
I-732L
Q-732L
732A
M1 with NCO1
732L
M_L with NCO_L
Bank of L complex mixers
732
731
Id2
741
Qd2

FIG. 7

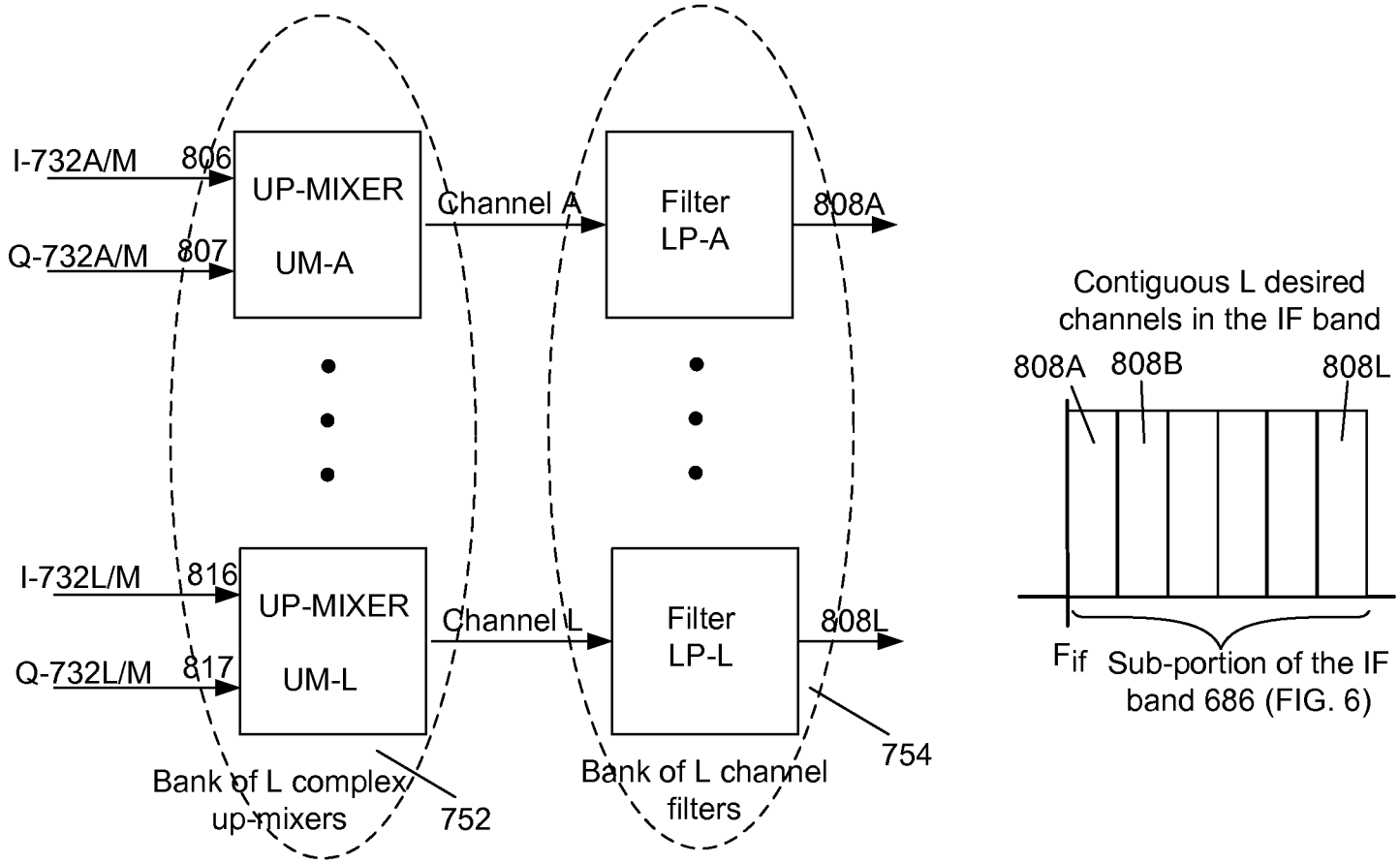
I-732A/M
806
Q-732A/M
807
UP-MIXER
UM-A
Channel A
Filter
LP-A
808A
I-732L/M
816
Q-732L/M
817
UP-MIXER
UM-L
Channel L
Filter
LP-L
808L
Bank of L complex up-mixers
752
Bank of L channel filters
754
Contiguous L desired channels in the IF band
808A
808B
808L
Fif
Sub-portion of the IF band 686 (FIG. 6)

FIG. 8

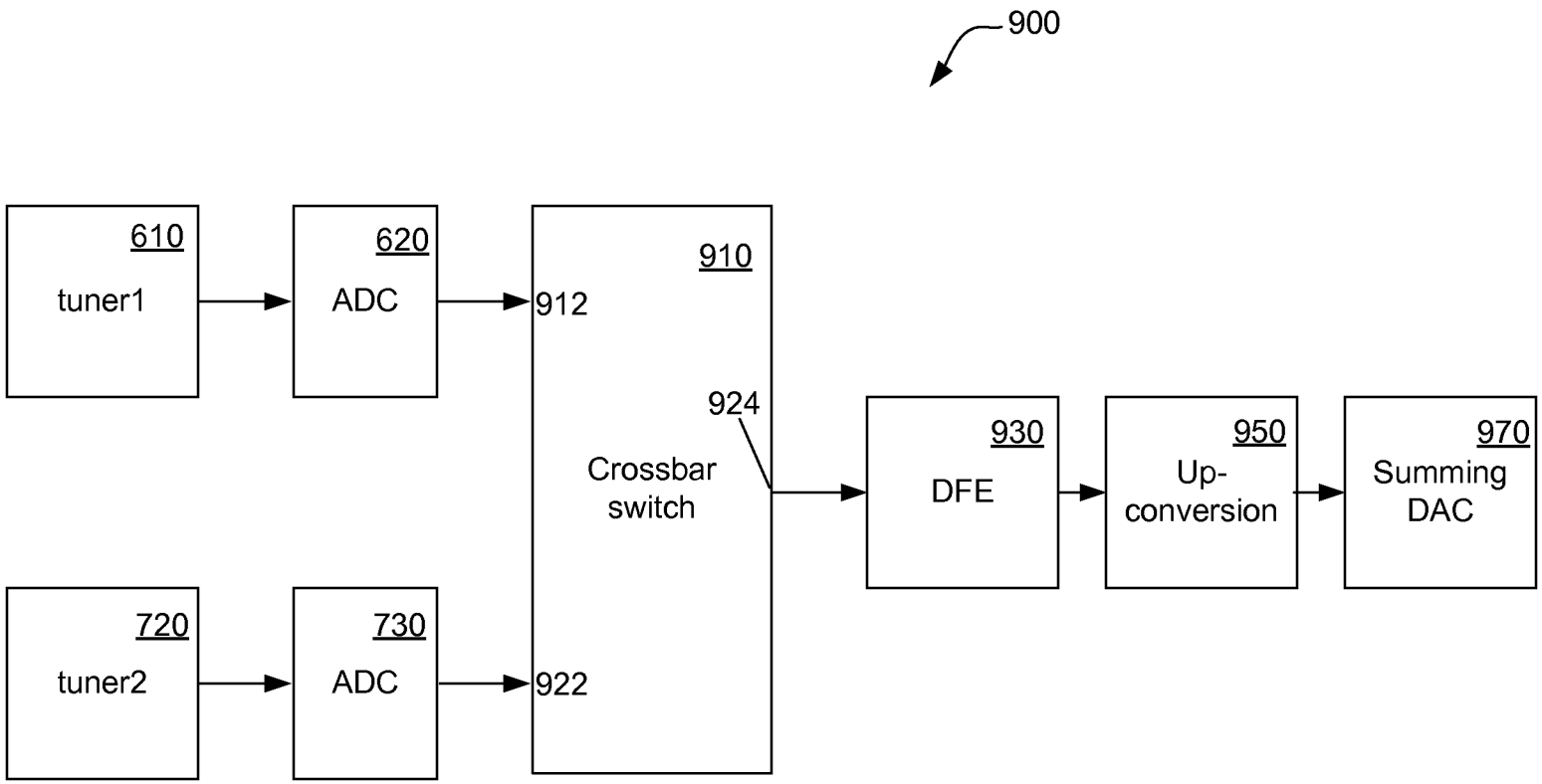
900
610
tuner1
620
ADC
910
912
924
Crossbar
switch
922
720
tuner2
730
ADC
930
DFE
950
Up-
conversion
970
Summing
DAC

FIG. 9

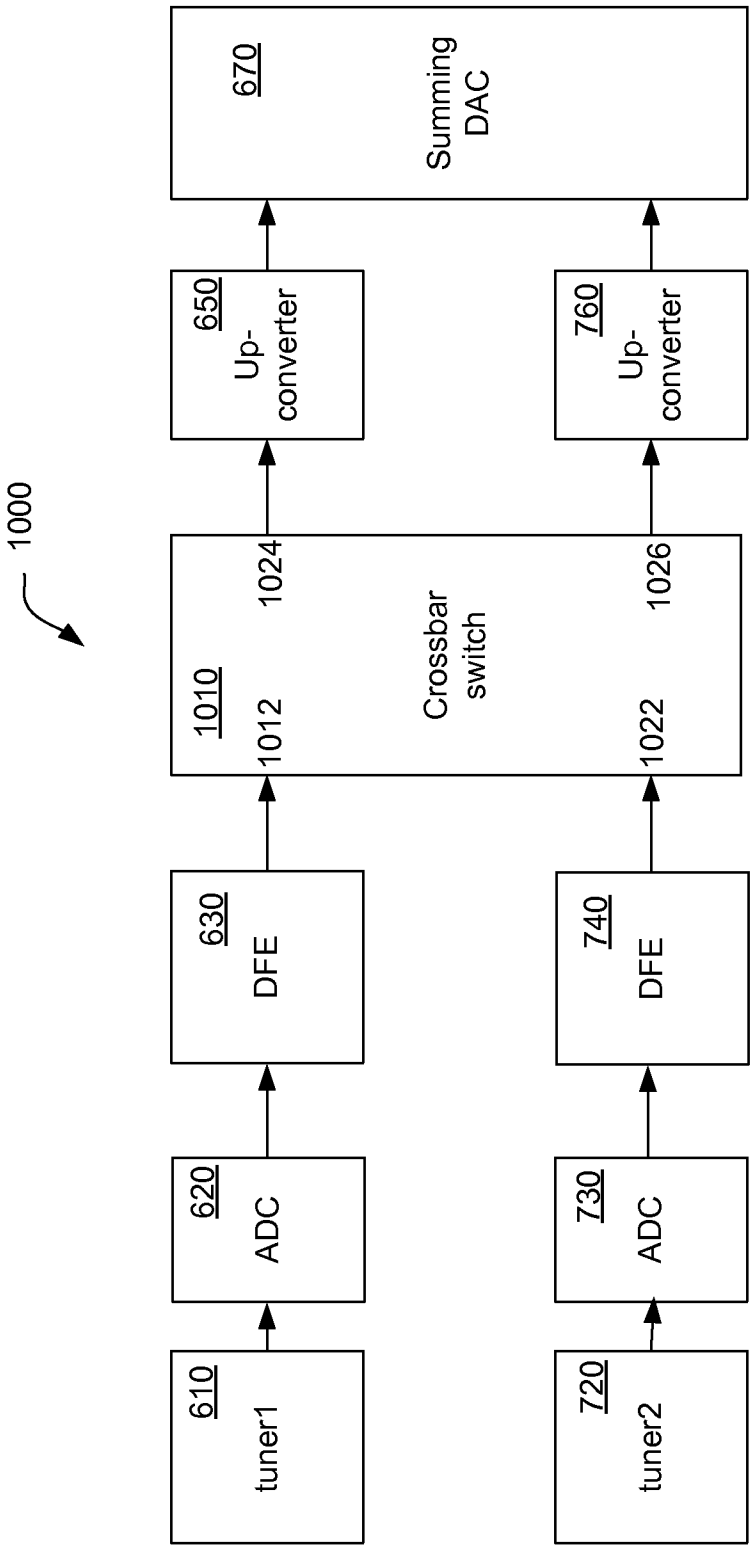
1000
610
tuner1
620
ADC
630
DFE
1010
1012
1024
Crossbar
switch
1022
1026
650
Up-
converter
670
Summing
DAC
720
tuner2
730
ADC
740
DFE
760
Up-
converter

FIG. 10

PATENT APPLICATION FEE DETERMINATION RECORD

Substitute for Form PTO-875

Application or Docket Number
13/962,871

APPLICATION AS FILED - PART I

FOR	(Column 1) NUMBER FILED	(Column 2) NUMBER EXTRA	SMALL ENTITY RATE($)	SMALL ENTITY FEE($)	OR	OTHER THAN SMALL ENTITY RATE($)	OTHER THAN SMALL ENTITY FEE($)
BASIC FEE (37 CFR 1.16(a), (b), or (c))	N/A	N/A	N/A	70		N/A	
SEARCH FEE (37 CFR 1.16(k), (i), or (m))	N/A	N/A	N/A	300		N/A	
EXAMINATION FEE (37 CFR 1.16(o), (p), or (q))	N/A	N/A	N/A	360		N/A	
TOTAL CLAIMS (37 CFR 1.16(i))	27 minus 20 =	* 7	x 40 =	280	OR		
INDEPENDENT CLAIMS (37 CFR 1.16(h))	3 minus 3 =	*	x 210 =	0.00			
APPLICATION SIZE FEE (37 CFR 1.16(s))	If the specification and drawings exceed 100 sheets of paper, the application size fee due is $310 ($155 for small entity) for each additional 50 sheets or fraction thereof. See 35 U.S.C. 41(a)(1)(G) and 37 CFR 1.16(s).			0.00			
MULTIPLE DEPENDENT CLAIM PRESENT (37 CFR 1.16(j))				0.00			
* If the difference in column 1 is less than zero, enter "0" in column 2.			TOTAL	1010		TOTAL	

APPLICATION AS AMENDED - PART II

		(Column 1) CLAIMS REMAINING AFTER AMENDMENT		(Column 2) HIGHEST NUMBER PREVIOUSLY PAID FOR	(Column 3) PRESENT EXTRA	SMALL ENTITY RATE($)	SMALL ENTITY ADDITIONAL FEE($)	OR	OTHER THAN SMALL ENTITY RATE($)	OTHER THAN SMALL ENTITY ADDITIONAL FEE($)
AMENDMENT A	Total (37 CFR 1.16(i))	*	Minus	**	=	x =		OR	x =	
AMENDMENT A	Independent (37 CFR 1.16(h))	*	Minus	***	=	x =		OR	x =	
AMENDMENT A	Application Size Fee (37 CFR 1.16(s))									
AMENDMENT A	FIRST PRESENTATION OF MULTIPLE DEPENDENT CLAIM (37 CFR 1.16(j))							OR		
						TOTAL ADD'L FEE		OR	TOTAL ADD'L FEE	

		(Column 1) CLAIMS REMAINING AFTER AMENDMENT		(Column 2) HIGHEST NUMBER PREVIOUSLY PAID FOR	(Column 3) PRESENT EXTRA	RATE($)	ADDITIONAL FEE($)		RATE($)	ADDITIONAL FEE($)
AMENDMENT B	Total (37 CFR 1.16(i))	*	Minus	**	=	x =		OR	x =	
AMENDMENT B	Independent (37 CFR 1.16(h))	*	Minus	***	=	x =		OR	x =	
AMENDMENT B	Application Size Fee (37 CFR 1.16(s))									
AMENDMENT B	FIRST PRESENTATION OF MULTIPLE DEPENDENT CLAIM (37 CFR 1.16(j))							OR		
						TOTAL ADD'L FEE		OR	TOTAL ADD'L FEE	

* If the entry in column 1 is less than the entry in column 2, write "0" in column 3.
** If the "Highest Number Previously Paid For" IN THIS SPACE is less than 20, enter "20".
*** If the "Highest Number Previously Paid For" IN THIS SPACE is less than 3, enter "3".
The "Highest Number Previously Paid For" (Total or Independent) is the highest found in the appropriate box in column 1.

UNITED STATES PATENT AND TRADEMARK OFFICE

UNITED STATES DEPARTMENT OF COMMERCE
United States Patent and Trademark Office
Address: COMMISSIONER FOR PATENTS
P.O. Box 1450
Alexandria, Virginia 22313-1450
www.uspto.gov

APPLICATION NUMBER	FILING or 371(c) DATE	GRP ART UNIT	FIL FEE REC'D	ATTY.DOCKET.NO	TOT CLAIMS	IND CLAIMS
13/962,871	08/08/2013	2636	0.00	89194-002720US-883946	27	3

CONFIRMATION NO. 3953

20350
KILPATRICK TOWNSEND & STOCKTON LLP
TWO EMBARCADERO CENTER
EIGHTH FLOOR
SAN FRANCISCO, CA 94111-3834

FILING RECEIPT

OC000000063421996

Date Mailed: 08/29/2013

Receipt is acknowledged of this non-provisional patent application. The application will be taken up for examination in due course. Applicant will be notified as to the results of the examination. Any correspondence concerning the application must include the following identification information: the U.S. APPLICATION NUMBER, FILING DATE, NAME OF APPLICANT, and TITLE OF INVENTION. Fees transmitted by check or draft are subject to collection. Please verify the accuracy of the data presented on this receipt. **If an error is noted on this Filing Receipt, please submit a written request for a Filing Receipt Correction. Please provide a copy of this Filing Receipt with the changes noted thereon. If you received a "Notice to File Missing Parts" for this application, please submit any corrections to this Filing Receipt with your reply to the Notice. When the USPTO processes the reply to the Notice, the USPTO will generate another Filing Receipt incorporating the requested corrections**

Inventor(s)

Madhukar Reddy, Carlsbad, CA;
Curtis Ling, Carlsbad, CA;
Tim Gallagher, Carlsbad, CA;

Applicant(s)

MAXLINEAR, INC., Carlsbad, CA

Assignment For Published Patent Application

MAXLINEAR, INC., Carlsbad, CA

Power of Attorney: The patent practitioners associated with Customer Number 20350

Domestic Priority data as claimed by applicant

This application is a CON of 12/762,900 04/19/2010 PAT 8526898
which claims benefit of 61/170,526 04/17/2009

Foreign Applications for which priority is claimed (You may be eligible to benefit from the **Patent Prosecution Highway** program at the USPTO. Please see http://www.uspto.gov for more information.) - None.
Foreign application information must be provided in an Application Data Sheet in order to constitute a claim to foreign priority. See 37 CFR 1.55 and 1.76.

Permission to Access - A proper **Authorization to Permit Access to Application by Participating Offices** (PTO/SB/39 or its equivalent) has been received by the USPTO.

If Required, Foreign Filing License Granted: 08/23/2013
The country code and number of your priority application, to be used for filing abroad under the Paris Convention, is **US 13/962,871**

Projected Publication Date: To Be Determined - pending completion of Missing Parts

Non-Publication Request: No

Early Publication Request: No
**** SMALL ENTITY ****
Title

WIDEBAND TUNER ARCHITECTURE

Preliminary Class

398

Statement under 37 CFR 1.55 or 1.78 for AIA (First Inventor to File) Transition Applications: No

PROTECTING YOUR INVENTION OUTSIDE THE UNITED STATES

Since the rights granted by a U.S. patent extend only throughout the territory of the United States and have no effect in a foreign country, an inventor who wishes patent protection in another country must apply for a patent in a specific country or in regional patent offices. Applicants may wish to consider the filing of an international application under the Patent Cooperation Treaty (PCT). An international (PCT) application generally has the same effect as a regular national patent application in each PCT-member country. The PCT process **simplifies** the filing of patent applications on the same invention in member countries, but **does not result** in a grant of "an international patent" and does not eliminate the need of applicants to file additional documents and fees in countries where patent protection is desired.

Almost every country has its own patent law, and a person desiring a patent in a particular country must make an application for patent in that country in accordance with its particular laws. Since the laws of many countries differ in various respects from the patent law of the United States, applicants are advised to seek guidance from specific foreign countries to ensure that patent rights are not lost prematurely.

Applicants also are advised that in the case of inventions made in the United States, the Director of the USPTO must issue a license before applicants can apply for a patent in a foreign country. The filing of a U.S. patent application serves as a request for a foreign filing license. The application's filing receipt contains further information and guidance as to the status of applicant's license for foreign filing.

Applicants may wish to consult the USPTO booklet, "General Information Concerning Patents" (specifically, the section entitled "Treaties and Foreign Patents") for more information on timeframes and deadlines for filing foreign patent applications. The guide is available either by contacting the USPTO Contact Center at 800-786-9199, or it can be viewed on the USPTO website at http://www.uspto.gov/web/offices/pac/doc/general/index.html.

For information on preventing theft of your intellectual property (patents, trademarks and copyrights), you may wish to consult the U.S. Government website, http://www.stopfakes.gov. Part of a Department of Commerce initiative, this website includes self-help "toolkits" giving innovators guidance on how to protect intellectual property in specific countries such as China, Korea and Mexico. For questions regarding patent enforcement issues, applicants may call the U.S. Government hotline at 1-866-999-HALT (1-866-999-4258).

LICENSE FOR FOREIGN FILING UNDER

Title 35, United States Code, Section 184

Title 37, Code of Federal Regulations, 5.11 & 5.15

GRANTED

The applicant has been granted a license under 35 U.S.C. 184, if the phrase "IF REQUIRED, FOREIGN FILING LICENSE GRANTED" followed by a date appears on this form. Such licenses are issued in all applications where the conditions for issuance of a license have been met, regardless of whether or not a license may be required as set forth in 37 CFR 5.15. The scope and limitations of this license are set forth in 37 CFR 5.15(a) unless an earlier license has been issued under 37 CFR 5.15(b). The license is subject to revocation upon written notification. The date indicated is the effective date of the license, unless an earlier license of similar scope has been granted under 37 CFR 5.13 or 5.14.

This license is to be retained by the licensee and may be used at any time on or after the effective date thereof unless it is revoked. This license is automatically transferred to any related applications(s) filed under 37 CFR 1.53(d). This license is not retroactive.

The grant of a license does not in any way lessen the responsibility of a licensee for the security of the subject matter as imposed by any Government contract or the provisions of existing laws relating to espionage and the national security or the export of technical data. Licensees should apprise themselves of current regulations especially with respect to certain countries, of other agencies, particularly the Office of Defense Trade Controls, Department of State (with respect to Arms, Munitions and Implements of War (22 CFR 121-128)); the Bureau of Industry and Security, Department of Commerce (15 CFR parts 730-774); the Office of Foreign AssetsControl, Department of Treasury (31 CFR Parts 500+) and the Department of Energy.

NOT GRANTED

No license under 35 U.S.C. 184 has been granted at this time, if the phrase "IF REQUIRED, FOREIGN FILING LICENSE GRANTED" DOES NOT appear on this form. Applicant may still petition for a license under 37 CFR 5.12, if a license is desired before the expiration of 6 months from the filing date of the application. If 6 months has lapsed from the filing date of this application and the licensee has not received any indication of a secrecy order under 35 U.S.C. 181, the licensee may foreign file the application pursuant to 37 CFR 5.15(b).

SelectUSA

The United States represents the largest, most dynamic marketplace in the world and is an unparalleled location for business investment, innovation, and commercialization of new technologies. The U.S. offers tremendous resources and advantages for those who invest and manufacture goods here. Through SelectUSA, our nation works to promote and facilitate business investment. SelectUSA provides information assistance to the international investor community; serves as an ombudsman for existing and potential investors; advocates on behalf of U.S. cities, states, and regions competing for global investment; and counsels U.S. economic development organizations on investment attraction best practices. To learn more about why the United States is the best country in the world to develop technology, manufacture products, deliver services, and grow your business, visit http://www.SelectUSA.gov or call +1-202-482-6800.

UNITED STATES PATENT AND TRADEMARK OFFICE

UNITED STATES DEPARTMENT OF COMMERCE
United States Patent and Trademark Office
Address: COMMISSIONER FOR PATENTS
P.O. Box 1450
Alexandria, Virginia 22313-1450
www.uspto.gov

APPLICATION NUMBER	FILING OR 371(C) DATE	FIRST NAMED APPLICANT	ATTY. DOCKET NO./TITLE
13/962,871	08/08/2013	Madhukar Reddy	89194-002720US-883946

CONFIRMATION NO. 3953

FORMALITIES LETTER

20350
KILPATRICK TOWNSEND & STOCKTON LLP
TWO EMBARCADERO CENTER
EIGHTH FLOOR
SAN FRANCISCO, CA 94111-3834

OC000000063421997

Date Mailed: 08/29/2013

NOTICE TO FILE MISSING PARTS OF NONPROVISIONAL APPLICATION

FILED UNDER 37 CFR 1.53(b)

Filing Date Granted

Items Required To Avoid Abandonment:

An application number and filing date have been accorded to this application. The item(s) indicated below, however, are missing. Applicant is given **TWO MONTHS** from the date of this Notice within which to file all required items below to avoid abandonment. Extensions of time may be obtained by filing a petition accompanied by the extension fee under the provisions of 37 CFR 1.136(a).

- The statutory basic filing fee is missing.
  *Applicant must submit $**70** to complete the basic filing fee for a small entity.*

The applicant needs to satisfy supplemental fees problems indicated below.

The required item(s) identified below must be timely submitted to avoid abandonment:

- Additional claim fees of $ **280** as a small entity, including any required multiple dependent claim fee, are required. Applicant must submit the additional claim fees or cancel the additional claims for which fees are due.
- A surcharge (for late submission of the basic filing fee, search fee, examination fee or inventor's oath or declaration) as set forth in 37 CFR 1.16(f) of $ **70** for a small entity in compliance with 37 CFR 1.27, must be submitted.

SUMMARY OF FEES DUE:

Total fee(s) required within **TWO MONTHS** from the date of this Notice is $ **1080** for a small entity
- $ **70** Statutory basic filing fee.
- $ **70** Surcharge.
- The application search fee has not been paid. Applicant must submit $ **300** to complete the search fee.
- The application examination fee has not been paid. Applicant must submit $ **360** to complete the examination fee for a small entity in compliance with 37 CFR 1.27.
- Total additional claim fee(s) for this application is $ **280**
  - $ **280** for **7** total claims over 20.

Items Required To Avoid Processing Delays:

Applicant is notified that the above-identified application contains the deficiencies noted below. No period for reply is set forth in this notice for correction of these deficiencies. However, if a deficiency relates to the inventor's oath or declaration, the applicant must file an oath or declaration in compliance with 37 CFR 1.63, or a substitute statement in compliance with 37 CFR 1.64, executed by or with respect to each actual inventor no later than the expiration of the time period set in the "Notice of Allowability" to avoid abandonment. See 37 CFR 1.53(f).

- A properly executed inventor's oath or declaration has not been received for the following inventor(s):
  Madhukar Reddy
  Curtis Ling
  Tim Gallagher
  Applicant may submit the inventor's oath or declaration at any time before the Notice of Allowance and Fee(s) Due, PTOL-85, is mailed.

Replies must be received in the USPTO within the set time period or must include a proper Certificate of Mailing or Transmission under 37 CFR 1.8 with a mailing or transmission date within the set time period. For more information and a suggested format, see Form PTO/SB/92 and MPEP 512.

Replies should be mailed to:

Mail Stop Missing Parts
Commissioner for Patents
P.O. Box 1450
Alexandria VA 22313-1450

Registered users of EFS-Web may alternatively submit their reply to this notice via EFS-Web.
https://sportal.uspto.gov/authenticate/AuthenticateUserLocalEPF.html

For more information about EFS-Web please call the USPTO Electronic Business Center at **1-866-217-9197** or visit our website at http://www.uspto.gov/ebc.

If you are not using EFS-Web to submit your reply, you must include a copy of this notice.

/mduong/

Office of Data Management, Application Assistance Unit (571) 272-4000, or (571) 272-4200, or 1-888-786-0101

UNITED STATES PATENT AND TRADEMARK OFFICE

UNITED STATES DEPARTMENT OF COMMERCE
United States Patent and Trademark Office
Address: COMMISSIONER FOR PATENTS
P.O. Box 1450
Alexandria, Virginia 22313-1450
www.uspto.gov

APPLICATION NUMBER	FILING OR 371(C) DATE	FIRST NAMED APPLICANT	ATTY. DOCKET NO./TITLE
13/962,871	08/08/2013	Madhukar Reddy	89194-002720US-883946

CONFIRMATION NO. 3953

POA ACCEPTANCE LETTER

20350
KILPATRICK TOWNSEND & STOCKTON LLP
TWO EMBARCADERO CENTER
EIGHTH FLOOR
SAN FRANCISCO, CA 94111-3834

OC000000063422066

Date Mailed: 08/29/2013

NOTICE OF ACCEPTANCE OF POWER OF ATTORNEY

This is in response to the Power of Attorney filed 08/08/2013.

The Power of Attorney in this application is accepted. Correspondence in this application will be mailed to the above address as provided by 37 CFR 1.33.

/mduong/

Office of Data Management, Application Assistance Unit (571) 272-4000, or (571) 272-4200, or 1-888-786-0101

To: ipefiling@kilpatricktownsend.com,jlhice@kilpatrick.foundationip.com,mcollins@kilpatricktownsend.com
From: PAIR_eOfficeAction@uspto.gov
Cc: PAIR_eOfficeAction@uspto.gov
Subject: Private PAIR Correspondence Notification for Customer Number 20350

Aug 29, 2013 05:32:05 AM

Dear PAIR Customer:

KILPATRICK TOWNSEND & STOCKTON LLP
TWO EMBARCADERO CENTER
EIGHTH FLOOR
SAN FRANCISCO, CA 94111-3834
UNITED STATES

The following USPTO patent application(s) associated with your Customer Number, 20350 , have new outgoing correspondence. This correspondence is now available for viewing in Private PAIR.

The official date of notification of the outgoing correspondence will be indicated on the form PTOL-90 accompanying the correspondence.

Disclaimer:
The list of documents shown below is provided as a courtesy and is not part of the official file wrapper. The content of the images shown in PAIR is the official record.

Application	Document	Mailroom Date	Attorney Docket No.
13962871	APP.FILE.REC	08/29/2013	89194-002720US-883946
	NTC.MISS.PRT	08/29/2013	89194-002720US-883946
	N570	08/29/2013	89194-002720US-883946

To view your correspondence online or update your email addresses, please visit us anytime at https://sportal.uspto.gov/secure/myportal/privatepair.

If you have any questions, please email the Electronic Business Center (EBC) at EBC@uspto.gov with 'e-Office Action' on the subject line or call 1-866-217-9197 during the following hours:

Monday - Friday 6:00 a.m. to 12:00 a.m.

Thank you for prompt attention to this notice,

UNITED STATES PATENT AND TRADEMARK OFFICE

PATENT APPLICATION INFORMATION RETRIEVAL SYSTEM

UNITED STATES PATENT AND TRADEMARK OFFICE

UNITED STATES DEPARTMENT OF COMMERCE
United States Patent and Trademark Office
Address: COMMISSIONER FOR PATENTS
P.O. Box 1450
Alexandria, Virginia 22313-1450
www.uspto.gov

APPLICATION NUMBER	FILING OR 371(C) DATE	FIRST NAMED APPLICANT	ATTY. DOCKET NO./TITLE
13/962,871	08/08/2013	Madhukar Reddy	89194-002720US-883946

CONFIRMATION NO. 3953

FORMALITIES LETTER

20350
KILPATRICK TOWNSEND & STOCKTON LLP
TWO EMBARCADERO CENTER
EIGHTH FLOOR
SAN FRANCISCO, CA 94111-3834

OC000000063421997

Date Mailed: 08/29/2013

NOTICE TO FILE MISSING PARTS OF NONPROVISIONAL APPLICATION

FILED UNDER 37 CFR 1.53(b)

Filing Date Granted

Items Required To Avoid Abandonment:

An application number and filing date have been accorded to this application. The item(s) indicated below, however, are missing. Applicant is given **TWO MONTHS** from the date of this Notice within which to file all required items below to avoid abandonment. Extensions of time may be obtained by filing a petition accompanied by the extension fee under the provisions of 37 CFR 1.136(a).

- The statutory basic filing fee is missing.
  *Applicant must submit $**70** to complete the basic filing fee for a small entity.*

The applicant needs to satisfy supplemental fees problems indicated below.

The required item(s) identified below must be timely submitted to avoid abandonment:

- Additional claim fees of $ **280** as a small entity, including any required multiple dependent claim fee, are required. Applicant must submit the additional claim fees or cancel the additional claims for which fees are due.
- A surcharge (for late submission of the basic filing fee, search fee, examination fee or inventor's oath or declaration) as set forth in 37 CFR 1.16(f) of $ **70** for a small entity in compliance with 37 CFR 1.27, must be submitted.

SUMMARY OF FEES DUE:

Total fee(s) required within **TWO MONTHS** from the date of this Notice is $ **1080** for a small entity

- $ **70** Statutory basic filing fee.
- $ **70** Surcharge.
- The application search fee has not been paid. Applicant must submit $ **300** to complete the search fee.
- The application examination fee has not been paid. Applicant must submit $ **360** to complete the examination fee for a small entity in compliance with 37 CFR 1.27.
- Total additional claim fee(s) for this application is $ **280**
  - $ **280** for **7** total claims over 20.

Items Required To Avoid Processing Delays:

Applicant is notified that the above-identified application contains the deficiencies noted below. No period for reply is set forth in this notice for correction of these deficiencies. However, if a deficiency relates to the inventor's oath or declaration, the applicant must file an oath or declaration in compliance with 37 CFR 1.63, or a substitute statement in compliance with 37 CFR 1.64, executed by or with respect to each actual inventor no later than the expiration of the time period set in the "Notice of Allowability" to avoid abandonment. See 37 CFR 1.53(f).

- A properly executed inventor's oath or declaration has not been received for the following inventor(s):
  Madhukar Reddy
  Curtis Ling
  Tim Gallagher

  Applicant may submit the inventor's oath or declaration at any time before the Notice of Allowance and Fee(s) Due, PTOL-85, is mailed.

Replies must be received in the USPTO within the set time period or must include a proper Certificate of Mailing or Transmission under 37 CFR 1.8 with a mailing or transmission date within the set time period. For more information and a suggested format, see Form PTO/SB/92 and MPEP 512.

Replies should be mailed to:

Mail Stop Missing Parts
Commissioner for Patents
P.O. Box 1450
Alexandria VA 22313-1450

Registered users of EFS-Web may alternatively submit their reply to this notice via EFS-Web.
https://sportal.uspto.gov/authenticate/AuthenticateUserLocalEPF.html

For more information about EFS-Web please call the USPTO Electronic Business Center at **1-866-217-9197** or visit our website at http://www.uspto.gov/ebc.

If you are not using EFS-Web to submit your reply, you must include a copy of this notice.

/mduong/

Office of Data Management, Application Assistance Unit (571) 272-4000, or (571) 272-4200, or 1-888-786-0101

PTO/AIA/01 (06-12)
Approved for use through 01/31/2014. OMB 0651-0032
U.S. Patent and Trademark Office; U.S. DEPARTMENT OF COMMERCE
Under the Paperwork Reduction Act of 1995, no persons are required to respond to a collection of information unless it displays a valid OMB control number.

DECLARATION (37 CFR 1.63) FOR UTILITY OR DESIGN APPLICATION USING AN APPLICATION DATA SHEET (37 CFR 1.76)

Title of Invention	WIDEBAND TUNER ARCHITECTURE

As the below named inventor, I hereby declare that:

This declaration is directed to:

☐ The attached application, or

☒ United States application or PCT international application number 13/962,871 filed on August 8, 2013.

The above-identified application was made or authorized to be made by me.

I believe that I am the original inventor or an original joint inventor of a claimed invention in the application.

I hereby acknowledge that any willful false statement made in this declaration is punishable under 18 U.S.C. 1001 by fine or imprisonment of not more than five (5) years, or both.

WARNING:

Petitioner/applicant is cautioned to avoid submitting personal information in documents filed in a patent application that may contribute to identity theft. Personal information such as social security numbers, bank account numbers, or credit card numbers (other than a check or credit card authorization form PTO-2038 submitted for payment purposes) is never required by the USPTO to support a petition or an application. If this type of personal information is included in documents submitted to the USPTO, petitioners/applicants should consider redacting such personal information from the documents before submitting them to the USPTO. Petitioner/applicant is advised that the record of a patent application is available to the public after publication of the application (unless a non-publication request in compliance with 37 CFR 1.213(a) is made in the application) or issuance of a patent. Furthermore, the record from an abandoned application may also be available to the public if the application is referenced in a published application or an issued patent (see 37 CFR 1.14). Checks and credit card authorization forms PTO-2038 submitted for payment purposes are not retained in the application file and therefore are not publicly available.

LEGAL NAME OF INVENTOR

Inventor: Madhukar Reddy Date (Optional) :

Signature:

Note: An application data sheet (PTO/SB/14 or equivalent), including naming the entire inventive entity, must accompany this form or must have been previously filed. Use an additional PTO/AIA/01 form for each additional inventor.

This collection of information is required by 35 U.S.C. 115 and 37 CFR 1.63. The information is required to obtain or retain a benefit by the public which is to file (and by the USPTO to process) an application. Confidentiality is governed by 35 U.S.C. 122 and 37 CFR 1.11 and 1.14. This collection is estimated to take 1 minute to complete, including gathering, preparing, and submitting the completed application form to the USPTO. Time will vary depending upon the individual case. Any comments on the amount of time you require to complete this form and/or suggestions for reducing this burden, should be sent to the Chief Information Officer, U.S. Patent and Trademark Office, U.S. Department of Commerce, P.O. Box 1450, Alexandria, VA 22313-1450. DO NOT SEND FEES OR COMPLETED FORMS TO THIS ADDRESS. **SEND TO: Commissioner for Patents, P.O. Box 1450, Alexandria, VA 22313-1450.**

If you need assistance in completing the form, call 1-800-PTO-9199 and select option 2.

PTO/AIA/01 (06-12)
Approved for use through 01/31/2014. OMB 0651-0032
U.S. Patent and Trademark Office; U.S. DEPARTMENT OF COMMERCE
Under the Paperwork Reduction Act of 1995, no persons are required to respond to a collection of information unless it displays a valid OMB control number.

DECLARATION (37 CFR 1.63) FOR UTILITY OR DESIGN APPLICATION USING AN APPLICATION DATA SHEET (37 CFR 1.76)

Title of Invention	WIDEBAND TUNER ARCHITECTURE

As the below named inventor, I hereby declare that:

This declaration is directed to:

☐ The attached application, or

☒ United States application or PCT international application number 13/962,871 filed on August 8, 2013.

The above-identified application was made or authorized to be made by me.

I believe that I am the original inventor or an original joint inventor of a claimed invention in the application.

I hereby acknowledge that any willful false statement made in this declaration is punishable under 18 U.S.C. 1001 by fine or imprisonment of not more than five (5) years, or both.

WARNING:

Petitioner/applicant is cautioned to avoid submitting personal information in documents filed in a patent application that may contribute to identity theft. Personal information such as social security numbers, bank account numbers, or credit card numbers (other than a check or credit card authorization form PTO-2038 submitted for payment purposes) is never required by the USPTO to support a petition or an application. If this type of personal information is included in documents submitted to the USPTO, petitioners/applicants should consider redacting such personal information from the documents before submitting them to the USPTO. Petitioner/applicant is advised that the record of a patent application is available to the public after publication of the application (unless a non-publication request in compliance with 37 CFR 1.213(a) is made in the application) or issuance of a patent. Furthermore, the record from an abandoned application may also be available to the public if the application is referenced in a published application or an issued patent (see 37 CFR 1.14). Checks and credit card authorization forms PTO-2038 submitted for payment purposes are not retained in the application file and therefore are not publicly available.

LEGAL NAME OF INVENTOR

Inventor: Curtis Ling Date (Optional) :

Signature:

Note: An application data sheet (PTO/SB/14 or equivalent), including naming the entire inventive entity, must accompany this form or must have been previously filed. Use an additional PTO/AIA/01 form for each additional inventor.

This collection of information is required by 35 U.S.C. 115 and 37 CFR 1.63. The information is required to obtain or retain a benefit by the public which is to file (and by the USPTO to process) an application. Confidentiality is governed by 35 U.S.C. 122 and 37 CFR 1.11 and 1.14. This collection is estimated to take 1 minute to complete, including gathering, preparing, and submitting the completed application form to the USPTO. Time will vary depending upon the individual case. Any comments on the amount of time you require to complete this form and/or suggestions for reducing this burden, should be sent to the Chief Information Officer, U.S. Patent and Trademark Office, U.S. Department of Commerce, P.O. Box 1450, Alexandria, VA 22313-1450. DO NOT SEND FEES OR COMPLETED FORMS TO THIS ADDRESS. **SEND TO: Commissioner for Patents, P.O. Box 1450, Alexandria, VA 22313-1450.**

If you need assistance in completing the form, call 1-800-PTO-9199 and select option 2.

PTO/AIA/01 (06-12)
Approved for use through 01/31/2014. OMB 0651-0032
U.S. Patent and Trademark Office; U.S. DEPARTMENT OF COMMERCE
Under the Paperwork Reduction Act of 1995, no persons are required to respond to a collection of information unless it displays a valid OMB control number.

DECLARATION (37 CFR 1.63) FOR UTILITY OR DESIGN APPLICATION USING AN APPLICATION DATA SHEET (37 CFR 1.76)

Title of Invention	WIDEBAND TUNER ARCHITECTURE

As the below named inventor, I hereby declare that:

This declaration is directed to:

☐ The attached application, or

☒ United States application or PCT international application number 13/962,871 filed on August 8, 2013.

The above-identified application was made or authorized to be made by me.

I believe that I am the original inventor or an original joint inventor of a claimed invention in the application.

I hereby acknowledge that any willful false statement made in this declaration is punishable under 18 U.S.C. 1001 by fine or imprisonment of not more than five (5) years, or both.

WARNING:

Petitioner/applicant is cautioned to avoid submitting personal information in documents filed in a patent application that may contribute to identity theft. Personal information such as social security numbers, bank account numbers, or credit card numbers (other than a check or credit card authorization form PTO-2038 submitted for payment purposes) is never required by the USPTO to support a petition or an application. If this type of personal information is included in documents submitted to the USPTO, petitioners/applicants should consider redacting such personal information from the documents before submitting them to the USPTO. Petitioner/applicant is advised that the record of a patent application is available to the public after publication of the application (unless a non-publication request in compliance with 37 CFR 1.213(a) is made in the application) or issuance of a patent. Furthermore, the record from an abandoned application may also be available to the public if the application is referenced in a published application or an issued patent (see 37 CFR 1.14). Checks and credit card authorization forms PTO-2038 submitted for payment purposes are not retained in the application file and therefore are not publicly available.

LEGAL NAME OF INVENTOR

Inventor: Tim Gallagher Date (Optional) :

Signature:

Note: An application data sheet (PTO/SB/14 or equivalent), including naming the entire inventive entity, must accompany this form or must have been previously filed. Use an additional PTO/AIA/01 form for each additional inventor.

This collection of information is required by 35 U.S.C. 115 and 37 CFR 1.63. The information is required to obtain or retain a benefit by the public which is to file (and by the USPTO to process) an application. Confidentiality is governed by 35 U.S.C. 122 and 37 CFR 1.11 and 1.14. This collection is estimated to take 1 minute to complete, including gathering, preparing, and submitting the completed application form to the USPTO. Time will vary depending upon the individual case. Any comments on the amount of time you require to complete this form and/or suggestions for reducing this burden, should be sent to the Chief Information Officer, U.S. Patent and Trademark Office, U.S. Department of Commerce, P.O. Box 1450, Alexandria, VA 22313-1450. DO NOT SEND FEES OR COMPLETED FORMS TO THIS ADDRESS. **SEND TO: Commissioner for Patents, P.O. Box 1450, Alexandria, VA 22313-1450.**

If you need assistance in completing the form, call 1-800-PTO-9199 and select option 2.

Electronic Patent Application Fee Transmittal

Application Number:	13962871
Filing Date:	08-Aug-2013
Title of Invention:	WIDEBAND TUNER ARCHITECTURE
First Named Inventor/Applicant Name:	Madhukar Reddy
Filer:	Ardeshir Tabibi/Linda Mirelez-Huca
Attorney Docket Number:	89194-002720US-883946

Filed as Small Entity

Utility under 35 USC 111(a) Filing Fees

Description	Fee Code	Quantity	Amount	Sub-Total in USD($)
Basic Filing:				
Utility filing Fee (Electronic filing)	4011	1	70	70
Utility Search Fee	2111	1	300	300
Utility Examination Fee	2311	1	360	360
Pages:				
Claims:				
Claims in excess of 20	2202	7	40	280
Miscellaneous-Filing:				
Late Filing Fee for Oath or Declaration	2051	1	70	70

Description	Fee Code	Quantity	Amount	Sub-Total in USD($)
Petition:				
Patent-Appeals-and-Interference:				
Post-Allowance-and-Post-Issuance:				
Extension-of-Time:				
Extension - 2 months with $0 paid	2252	1	300	300
Miscellaneous:				
		Total in USD ($)		**1380**

Electronic Acknowledgement Receipt

EFS ID:	17763238
Application Number:	13962871
International Application Number:	
Confirmation Number:	3953
Title of Invention:	WIDEBAND TUNER ARCHITECTURE
First Named Inventor/Applicant Name:	Madhukar Reddy
Customer Number:	20350
Filer:	Ardeshir Tabibi/Linda Mirelez-Huca
Filer Authorized By:	Ardeshir Tabibi
Attorney Docket Number:	89194-002720US-883946
Receipt Date:	26-DEC-2013
Filing Date:	08-AUG-2013
Time Stamp:	19:28:43
Application Type:	Utility under 35 USC 111(a)

Payment information:

Submitted with Payment	yes
Payment Type	Credit Card
Payment was successfully received in RAM	$1380
RAM confirmation Number	3827
Deposit Account	201430
Authorized User	KILPATRICK TOWNSEND & STOCKTON, LLP

The Director of the USPTO is hereby authorized to charge indicated fees and credit any overpayment as follows:

Charge any Additional Fees required under 37 C.F.R. Section 1.16 (National application filing, search, and examination fees)

Charge any Additional Fees required under 37 C.F.R. Section 1.17 (Patent application and reexamination processing fees)

Charge any Additional Fees required under 37 C.F.R. Section 1.19 (Document supply fees)

Charge any Additional Fees required under 37 C.F.R. Section 1.20 (Post Issuance fees)

Charge any Additional Fees required under 37 C.F.R. Section 1.21 (Miscellaneous fees and charges)

File Listing:

Document Number	Document Description	File Name	File Size(Bytes)/ Message Digest	Multi Part /.zip	Pages (if appl.)
1	Extension of Time	2013_12_26_EXT_89194_002720US_883946.pdf	116187 d7d150cf6f653d5eab6e4c08db931681d61291d8	no	1
Warnings:					
Information:					
2	Miscellaneous Incoming Letter	2013_08_29_MP_NTC_89194_002720US_883946.pdf	1976484 96eb1333e92b588f8ef2c52433cdfc12e0048769	no	2
Warnings:					
Information:					
3	Oath or Declaration filed	2013_12_26_DEC_89194_002720US_883946.pdf	4381499 216576a10e349cad71fabadd3aadbfe2bb8f35b1	no	3
Warnings:					
Information:					
4	Fee Worksheet (SB06)	fee-info.pdf	40333 3ffae6bf8dfb70248430b13f5e0115f3892a44f4	no	2
Warnings:					
Information:					
		Total Files Size (in bytes):	6514503		

This Acknowledgement Receipt evidences receipt on the noted date by the USPTO of the indicated documents, characterized by the applicant, and including page counts, where applicable. It serves as evidence of receipt similar to a Post Card, as described in MPEP 503.

<u>New Applications Under 35 U.S.C. 111</u>
If a new application is being filed and the application includes the necessary components for a filing date (see 37 CFR 1.53(b)-(d) and MPEP 506), a Filing Receipt (37 CFR 1.54) will be issued in due course and the date shown on this Acknowledgement Receipt will establish the filing date of the application.

<u>National Stage of an International Application under 35 U.S.C. 371</u>
If a timely submission to enter the national stage of an international application is compliant with the conditions of 35 U.S.C. 371 and other applicable requirements a Form PCT/DO/EO/903 indicating acceptance of the application as a national stage submission under 35 U.S.C. 371 will be issued in addition to the Filing Receipt, in due course.

<u>New International Application Filed with the USPTO as a Receiving Office</u>
If a new international application is being filed and the international application includes the necessary components for an international filing date (see PCT Article 11 and MPEP 1810), a Notification of the International Application Number and of the International Filing Date (Form PCT/RO/105) will be issued in due course, subject to prescriptions concerning national security, and the date shown on this Acknowledgement Receipt will establish the international filing date of the application.

PETITION FOR EXTENSION OF TIME UNDER 37 CFR 1.136(a)	Docket Number (Optional) 89194-002720US-883946
Application Number 13/962,871	Filed August 8, 2013
For WIDEBAND TUNER ARCHITECTURE	
Art Unit 2636	Examiner Not Yet Assigned

This is a request under the provisions of 37 CFR 1.136(a) to extend the period for filing a reply in the above identified application.

The requested extension and fee are as follows (check time period desired and enter the appropriate fee below):

		Fee	Small Entity Fee	Micro Entity Fee	
☐	One month (37 CFR 1.17(a)(1))	$200	$100	$50	$_____
☒	Two months (37 CFR 1.17(a)(2))	$600	$300	$150	$300
☐	Three months (37 CFR 1.17(a)(3))	$1,400	$700	$350	$_____
☐	Four months (37 CFR 1.17(a)(4))	$2,200	$1,100	$550	$_____
☐	Five months (37 CFR 1.17(a)(5))	$3,000	$1,500	$750	$_____

☒ Applicant asserts small entity status. See 37 CFR 1.27.

☐ Applicant certifies micro entity status. See 37 CFR 1.29.
Form PTO/SB/15A or B or equivalent must either be enclosed or have been submitted previously.

☐ A check in the amount of the fee is enclosed.

☐ Payment by credit card.

☐ The Director has already been authorized to charge fees in this application to a Deposit Account.

☒ The Director is hereby authorized to charge any fees which may be required, or credit any overpayment, to Deposit Account Number 20-1430.

☒ Payment made via EFS-Web.

I am the

☐ applicant.

☒ attorney or agent of record. Registration Number 48,750

☐ attorney or agent acting under 37 CFR 1.34. Registration number _____

/Ardeshir Tabibi/	December 26, 2013
Signature	Date
Ardeshir Tabibi	(650) 326-2400
Typed or printed name	Telephone Number

NOTE: This form must be signed in accordance with 37 CFR 1.33. See 37 CFR 1.4 for signature requirements and certifications. Submit multiple forms if more than one signature is required, see below*.

☒ Total of 1 form is submitted.

This collection of information is required by 37 CFR 1.136(a). The information is required to obtain or retain a benefit by the public which is to file (and by the USPTO to process) an application. Confidentiality is governed by 35 U.S.C. 122 and 37 CFR 1.11 and 1.14. This collection is estimated to take 6 minutes to complete, including gathering, preparing, and submitting the completed application form to the USPTO. Time will vary depending upon the individual case. Any comments on the amount of time you require to complete this form and/or suggestions for reducing this burden, should be sent to the Chief Information Officer, U.S. Patent and Trademark Office, U.S. Department of Commerce, P.O. Box 1450, Alexandria, VA 22313-1450. DO NOT SEND FEES OR COMPLETED FORMS TO THIS ADDRESS. **SEND TO: Commissioner for Patents, P.O. Box 1450, Alexandria, VA 22313-1450.**

If you need assistance in completing the form, call 1-800-PTO-9199 and select option 2.

PATENT APPLICATION FEE DETERMINATION RECORD

Substitute for Form PTO-875

Application or Docket Number
13/962,871

APPLICATION AS FILED - PART I

FOR	(Column 1) NUMBER FILED	(Column 2) NUMBER EXTRA	SMALL ENTITY RATE($)	SMALL ENTITY FEE($)	OR	OTHER THAN SMALL ENTITY RATE($)	OTHER THAN SMALL ENTITY FEE($)
BASIC FEE (37 CFR 1.16(a), (b), or (c))	N/A	N/A	N/A	70		N/A	
SEARCH FEE (37 CFR 1.16(k), (i), or (m))	N/A	N/A	N/A	300		N/A	
EXAMINATION FEE (37 CFR 1.16(o), (p), or (q))	N/A	N/A	N/A	360		N/A	
TOTAL CLAIMS (37 CFR 1.16(i))	27 minus 20 =	* 7	x 40 =	280	OR		
INDEPENDENT CLAIMS (37 CFR 1.16(h))	3 minus 3 =	*	x 210 =	0.00			
APPLICATION SIZE FEE (37 CFR 1.16(s))	If the specification and drawings exceed 100 sheets of paper, the application size fee due is $310 ($155 for small entity) for each additional 50 sheets or fraction thereof. See 35 U.S.C. 41(a)(1)(G) and 37 CFR 1.16(s).			0.00			
MULTIPLE DEPENDENT CLAIM PRESENT (37 CFR 1.16(j))				0.00			
* If the difference in column 1 is less than zero, enter "0" in column 2.			TOTAL	1010		TOTAL	

APPLICATION AS AMENDED - PART II

		(Column 1) CLAIMS REMAINING AFTER AMENDMENT		(Column 2) HIGHEST NUMBER PREVIOUSLY PAID FOR	(Column 3) PRESENT EXTRA	SMALL ENTITY RATE($)	SMALL ENTITY ADDITIONAL FEE($)	OR	OTHER THAN SMALL ENTITY RATE($)	OTHER THAN SMALL ENTITY ADDITIONAL FEE($)
AMENDMENT A	Total (37 CFR 1.16(i))	*	Minus	**	=	x =		OR	x =	
AMENDMENT A	Independent (37 CFR 1.16(h))	*	Minus	***	=	x =		OR	x =	
AMENDMENT A	Application Size Fee (37 CFR 1.16(s))									
AMENDMENT A	FIRST PRESENTATION OF MULTIPLE DEPENDENT CLAIM (37 CFR 1.16(j))							OR		
						TOTAL ADD'L FEE		OR	TOTAL ADD'L FEE	

		(Column 1) CLAIMS REMAINING AFTER AMENDMENT		(Column 2) HIGHEST NUMBER PREVIOUSLY PAID FOR	(Column 3) PRESENT EXTRA	RATE($)	ADDITIONAL FEE($)		RATE($)	ADDITIONAL FEE($)
AMENDMENT B	Total (37 CFR 1.16(i))	*	Minus	**	=	x =		OR	x =	
AMENDMENT B	Independent (37 CFR 1.16(h))	*	Minus	***	=	x =		OR	x =	
AMENDMENT B	Application Size Fee (37 CFR 1.16(s))									
AMENDMENT B	FIRST PRESENTATION OF MULTIPLE DEPENDENT CLAIM (37 CFR 1.16(j))							OR		
						TOTAL ADD'L FEE		OR	TOTAL ADD'L FEE	

* If the entry in column 1 is less than the entry in column 2, write "0" in column 3.
** If the "Highest Number Previously Paid For" IN THIS SPACE is less than 20, enter "20".
*** If the "Highest Number Previously Paid For" IN THIS SPACE is less than 3, enter "3".
The "Highest Number Previously Paid For" (Total or Independent) is the highest found in the appropriate box in column 1.

UNITED STATES PATENT AND TRADEMARK OFFICE

UNITED STATES DEPARTMENT OF COMMERCE
United States Patent and Trademark Office
Address: COMMISSIONER FOR PATENTS
P.O. Box 1450
Alexandria, Virginia 22313-1450
www.uspto.gov

APPLICATION NUMBER	FILING or 371(c) DATE	GRP ART UNIT	FIL FEE REC'D	ATTY.DOCKET.NO	TOT CLAIMS	IND CLAIMS
13/962,871	08/08/2013	2636	1080	89194-002720US-883946	27	3

CONFIRMATION NO. 3953

UPDATED FILING RECEIPT

20350
KILPATRICK TOWNSEND & STOCKTON LLP
TWO EMBARCADERO CENTER
EIGHTH FLOOR
SAN FRANCISCO, CA 94111-3834

OC000000065809574

Date Mailed: 01/07/2014

Receipt is acknowledged of this non-provisional patent application. The application will be taken up for examination in due course. Applicant will be notified as to the results of the examination. Any correspondence concerning the application must include the following identification information: the U.S. APPLICATION NUMBER, FILING DATE, NAME OF APPLICANT, and TITLE OF INVENTION. Fees transmitted by check or draft are subject to collection. Please verify the accuracy of the data presented on this receipt. **If an error is noted on this Filing Receipt, please submit a written request for a Filing Receipt Correction. Please provide a copy of this Filing Receipt with the changes noted thereon. If you received a "Notice to File Missing Parts" for this application, please submit any corrections to this Filing Receipt with your reply to the Notice. When the USPTO processes the reply to the Notice, the USPTO will generate another Filing Receipt incorporating the requested corrections**

Inventor(s)

Madhukar Reddy, Carlsbad, CA;
Curtis Ling, Carlsbad, CA;
Tim Gallagher, Carlsbad, CA;

Applicant(s)

MAXLINEAR, INC., Carlsbad, CA

Assignment For Published Patent Application

MAXLINEAR, INC., Carlsbad, CA

Power of Attorney: The patent practitioners associated with Customer Number 20350

Domestic Priority data as claimed by applicant

This application is a CON of 12/762,900 04/19/2010 PAT 8526898
which claims benefit of 61/170,526 04/17/2009

Foreign Applications for which priority is claimed (You may be eligible to benefit from the **Patent Prosecution Highway** program at the USPTO. Please see http://www.uspto.gov for more information.) - None.
Foreign application information must be provided in an Application Data Sheet in order to constitute a claim to foreign priority. See 37 CFR 1.55 and 1.76.

Permission to Access - A proper **Authorization to Permit Access to Application by Participating Offices** (PTO/SB/39 or its equivalent) has been received by the USPTO.

If Required, Foreign Filing License Granted: 08/23/2013
The country code and number of your priority application, to be used for filing abroad under the Paris Convention, is **US 13/962,871**

Projected Publication Date: 04/17/2014

Non-Publication Request: No

Early Publication Request: No
**** SMALL ENTITY ****
Title

WIDEBAND TUNER ARCHITECTURE

Preliminary Class

398

Statement under 37 CFR 1.55 or 1.78 for AIA (First Inventor to File) Transition Applications: No

PROTECTING YOUR INVENTION OUTSIDE THE UNITED STATES

Since the rights granted by a U.S. patent extend only throughout the territory of the United States and have no effect in a foreign country, an inventor who wishes patent protection in another country must apply for a patent in a specific country or in regional patent offices. Applicants may wish to consider the filing of an international application under the Patent Cooperation Treaty (PCT). An international (PCT) application generally has the same effect as a regular national patent application in each PCT-member country. The PCT process **simplifies** the filing of patent applications on the same invention in member countries, but **does not result** in a grant of "an international patent" and does not eliminate the need of applicants to file additional documents and fees in countries where patent protection is desired.

Almost every country has its own patent law, and a person desiring a patent in a particular country must make an application for patent in that country in accordance with its particular laws. Since the laws of many countries differ in various respects from the patent law of the United States, applicants are advised to seek guidance from specific foreign countries to ensure that patent rights are not lost prematurely.

Applicants also are advised that in the case of inventions made in the United States, the Director of the USPTO must issue a license before applicants can apply for a patent in a foreign country. The filing of a U.S. patent application serves as a request for a foreign filing license. The application's filing receipt contains further information and guidance as to the status of applicant's license for foreign filing.

Applicants may wish to consult the USPTO booklet, "General Information Concerning Patents" (specifically, the section entitled "Treaties and Foreign Patents") for more information on timeframes and deadlines for filing foreign patent applications. The guide is available either by contacting the USPTO Contact Center at 800-786-9199, or it can be viewed on the USPTO website at http://www.uspto.gov/web/offices/pac/doc/general/index.html.

For information on preventing theft of your intellectual property (patents, trademarks and copyrights), you may wish to consult the U.S. Government website, http://www.stopfakes.gov. Part of a Department of Commerce initiative, this website includes self-help "toolkits" giving innovators guidance on how to protect intellectual property in specific countries such as China, Korea and Mexico. For questions regarding patent enforcement issues, applicants may call the U.S. Government hotline at 1-866-999-HALT (1-866-999-4258).

LICENSE FOR FOREIGN FILING UNDER

Title 35, United States Code, Section 184

Title 37, Code of Federal Regulations, 5.11 & 5.15

GRANTED

The applicant has been granted a license under 35 U.S.C. 184, if the phrase "IF REQUIRED, FOREIGN FILING LICENSE GRANTED" followed by a date appears on this form. Such licenses are issued in all applications where the conditions for issuance of a license have been met, regardless of whether or not a license may be required as set forth in 37 CFR 5.15. The scope and limitations of this license are set forth in 37 CFR 5.15(a) unless an earlier license has been issued under 37 CFR 5.15(b). The license is subject to revocation upon written notification. The date indicated is the effective date of the license, unless an earlier license of similar scope has been granted under 37 CFR 5.13 or 5.14.

This license is to be retained by the licensee and may be used at any time on or after the effective date thereof unless it is revoked. This license is automatically transferred to any related applications(s) filed under 37 CFR 1.53(d). This license is not retroactive.

The grant of a license does not in any way lessen the responsibility of a licensee for the security of the subject matter as imposed by any Government contract or the provisions of existing laws relating to espionage and the national security or the export of technical data. Licensees should apprise themselves of current regulations especially with respect to certain countries, of other agencies, particularly the Office of Defense Trade Controls, Department of State (with respect to Arms, Munitions and Implements of War (22 CFR 121-128)); the Bureau of Industry and Security, Department of Commerce (15 CFR parts 730-774); the Office of Foreign AssetsControl, Department of Treasury (31 CFR Parts 500+) and the Department of Energy.

NOT GRANTED

No license under 35 U.S.C. 184 has been granted at this time, if the phrase "IF REQUIRED, FOREIGN FILING LICENSE GRANTED" DOES NOT appear on this form. Applicant may still petition for a license under 37 CFR 5.12, if a license is desired before the expiration of 6 months from the filing date of the application. If 6 months has lapsed from the filing date of this application and the licensee has not received any indication of a secrecy order under 35 U.S.C. 181, the licensee may foreign file the application pursuant to 37 CFR 5.15(b).

SelectUSA

The United States represents the largest, most dynamic marketplace in the world and is an unparalleled location for business investment, innovation, and commercialization of new technologies. The U.S. offers tremendous resources and advantages for those who invest and manufacture goods here. Through SelectUSA, our nation works to promote and facilitate business investment. SelectUSA provides information assistance to the international investor community; serves as an ombudsman for existing and potential investors; advocates on behalf of U.S. cities, states, and regions competing for global investment; and counsels U.S. economic development organizations on investment attraction best practices. To learn more about why the United States is the best country in the world to develop technology, manufacture products, deliver services, and grow your business, visit http://www.SelectUSA.gov or call +1-202-482-6800.

To: ipefiling@kilpatricktownsend.com,jlhice@kilpatrick.foundationip.com,mcollins@kilpatricktownsend.com
From: PAIR_eOfficeAction@uspto.gov
Cc: PAIR_eOfficeAction@uspto.gov
Subject: Private PAIR Correspondence Notification for Customer Number 20350

Jan 07, 2014 05:27:05 AM

Dear PAIR Customer:

KILPATRICK TOWNSEND & STOCKTON LLP
TWO EMBARCADERO CENTER
EIGHTH FLOOR
SAN FRANCISCO, CA 94111-3834
UNITED STATES

The following USPTO patent application(s) associated with your Customer Number, 20350 , have new outgoing correspondence. This correspondence is now available for viewing in Private PAIR.

The official date of notification of the outgoing correspondence will be indicated on the form PTOL-90 accompanying the correspondence.

Disclaimer:
The list of documents shown below is provided as a courtesy and is not part of the official file wrapper. The content of the images shown in PAIR is the official record.

Application	Document	Mailroom Date	Attorney Docket No.
13962871	APP.FILE.REC	01/07/2014	89194-002720US-883946

To view your correspondence online or update your email addresses, please visit us anytime at https://sportal.uspto.gov/secure/myportal/privatepair.

If you have any questions, please email the Electronic Business Center (EBC) at EBC@uspto.gov with 'e-Office Action' on the subject line or call 1-866-217-9197 during the following hours:

Monday - Friday 6:00 a.m. to 12:00 a.m.

Thank you for prompt attention to this notice,

UNITED STATES PATENT AND TRADEMARK OFFICE

PATENT APPLICATION INFORMATION RETRIEVAL SYSTEM

UNITED STATES PATENT AND TRADEMARK OFFICE

UNITED STATES DEPARTMENT OF COMMERCE
United States Patent and Trademark Office
Address: COMMISSIONER FOR PATENTS
P.O. Box 1450
Alexandria, Virginia 22313-1450
www.uspto.gov

APPLICATION NUMBER	FILING OR 371(C) DATE	FIRST NAMED APPLICANT	ATTY. DOCKET NO./TITLE
13/962,871	08/08/2013	Madhukar Reddy	89194-002720US-883946

CONFIRMATION NO. 3953

20350
KILPATRICK TOWNSEND & STOCKTON LLP
TWO EMBARCADERO CENTER
EIGHTH FLOOR
SAN FRANCISCO, CA 94111-3834

PUBLICATION NOTICE

OC000000067849356

Title:WIDEBAND TUNER ARCHITECTURE

Publication No.US-2014-0104499-A1
Publication Date:04/17/2014

NOTICE OF PUBLICATION OF APPLICATION

The above-identified application will be electronically published as a patent application publication pursuant to 37 CFR 1.211, et seq. The patent application publication number and publication date are set forth above.

The publication may be accessed through the USPTO's publically available Searchable Databases via the Internet at www.uspto.gov. The direct link to access the publication is currently http://www.uspto.gov/patft/.

The publication process established by the Office does not provide for mailing a copy of the publication to applicant. A copy of the publication may be obtained from the Office upon payment of the appropriate fee set forth in 37 CFR 1.19(a)(1). Orders for copies of patent application publications are handled by the USPTO's Office of Public Records. The Office of Public Records can be reached by telephone at (703) 308-9726 or (800) 972-6382, by facsimile at (703) 305-8759, by mail addressed to the United States Patent and Trademark Office, Office of Public Records, Alexandria, VA 22313-1450 or via the Internet.

In addition, information on the status of the application, including the mailing date of Office actions and the dates of receipt of correspondence filed in the Office, may also be accessed via the Internet through the Patent Electronic Business Center at www.uspto.gov using the public side of the Patent Application Information and Retrieval (PAIR) system. The direct link to access this status information is currently http://pair.uspto.gov/. Prior to publication, such status information is confidential and may only be obtained by applicant using the private side of PAIR.

Further assistance in electronically accessing the publication, or about PAIR, is available by calling the Patent Electronic Business Center at 1-866-217-9197.

Office of Data Managment, Application Assistance Unit (571) 272-4000, or (571) 272-4200, or 1-888-786-0101

To: ipefiling@kilpatricktownsend.com,jlhice@kilpatrick.foundationip.com,mcollins@kilpatricktownsend.com
From: PAIR_eOfficeAction@uspto.gov
Cc: PAIR_eOfficeAction@uspto.gov
Subject: Private PAIR Correspondence Notification for Customer Number 20350

Apr 18, 2014 05:22:17 AM

Dear PAIR Customer:

KILPATRICK TOWNSEND & STOCKTON LLP
TWO EMBARCADERO CENTER
EIGHTH FLOOR
SAN FRANCISCO, CA 94111-3834
UNITED STATES

The following USPTO patent application(s) associated with your Customer Number, 20350 , have new outgoing correspondence. This correspondence is now available for viewing in Private PAIR.

The official date of notification of the outgoing correspondence will be indicated on the form PTOL-90 accompanying the correspondence.

Disclaimer:
The list of documents shown below is provided as a courtesy and is not part of the official file wrapper. The content of the images shown in PAIR is the official record.

Application	Document	Mailroom Date	Attorney Docket No.
13962871	NTC.PUB	04/17/2014	89194-002720US-883946

To view your correspondence online or update your email addresses, please visit us anytime at https://sportal.uspto.gov/secure/myportal/privatepair.

If you have any questions, please email the Electronic Business Center (EBC) at EBC@uspto.gov with 'e-Office Action' on the subject line or call 1-866-217-9197 during the following hours:

Monday - Friday 6:00 a.m. to 12:00 a.m.

Thank you for prompt attention to this notice,

UNITED STATES PATENT AND TRADEMARK OFFICE

PATENT APPLICATION INFORMATION RETRIEVAL SYSTEM

UNITED STATES PATENT AND TRADEMARK OFFICE

UNITED STATES DEPARTMENT OF COMMERCE
United States Patent and Trademark Office
Address: COMMISSIONER FOR PATENTS
P.O. Box 1450
Alexandria, Virginia 22313-1450
www.uspto.gov

APPLICATION NO.	FILING DATE	FIRST NAMED INVENTOR	ATTORNEY DOCKET NO.	CONFIRMATION NO.
13/962,871	08/08/2013	Madhukar Reddy	89194-002720US-883946	3953

20350 7590 06/27/2014
KILPATRICK TOWNSEND & STOCKTON LLP
TWO EMBARCADERO CENTER
EIGHTH FLOOR
SAN FRANCISCO, CA 94111-3834

EXAMINER
JACKSON, BLANE J

ART UNIT	PAPER NUMBER
2649	

NOTIFICATION DATE	DELIVERY MODE
06/27/2014	ELECTRONIC

Please find below and/or attached an Office communication concerning this application or proceeding.

The time period for reply, if any, is set in the attached communication.

Notice of the Office communication was sent electronically on above-indicated "Notification Date" to the following e-mail address(es):

ipefiling@kilpatricktownsend.com
jlhice@kilpatrick.foundationip.com

Office Action Summary	Application No. 13/962,871	Applicant(s) REDDY ET AL.	
	Examiner BLANE J. JACKSON	Art Unit 2649	AIA (First Inventor to File) Status No

-- The MAILING DATE of this communication appears on the cover sheet with the correspondence address --

Period for Reply

A SHORTENED STATUTORY PERIOD FOR REPLY IS SET TO EXPIRE 3 MONTHS FROM THE MAILING DATE OF THIS COMMUNICATION.

- Extensions of time may be available under the provisions of 37 CFR 1.136(a). In no event, however, may a reply be timely filed after SIX (6) MONTHS from the mailing date of this communication.
- If NO period for reply is specified above, the maximum statutory period will apply and will expire SIX (6) MONTHS from the mailing date of this communication.
- Failure to reply within the set or extended period for reply will, by statute, cause the application to become ABANDONED (35 U.S.C. § 133). Any reply received by the Office later than three months after the mailing date of this communication, even if timely filed, may reduce any earned patent term adjustment. See 37 CFR 1.704(b).

Status

1)☐ Responsive to communication(s) filed on *08 August 2013*.

☐ A declaration(s)/affidavit(s) under **37 CFR 1.130(b)** was/were filed on _____.

2a)☐ This action is **FINAL**. 2b)☒ This action is non-final.

3)☐ An election was made by the applicant in response to a restriction requirement set forth during the interview on _____; the restriction requirement and election have been incorporated into this action.

4)☐ Since this application is in condition for allowance except for formal matters, prosecution as to the merits is closed in accordance with the practice under *Ex parte Quayle*, 1935 C.D. 11, 453 O.G. 213.

Disposition of Claims*

5)☒ Claim(s) *1-27* is/are pending in the application.

5a) Of the above claim(s) _____ is/are withdrawn from consideration.

6)☐ Claim(s) _____ is/are allowed.

7)☒ Claim(s) *1-27* is/are rejected.

8)☐ Claim(s) _____ is/are objected to.

9)☐ Claim(s) _____ are subject to restriction and/or election requirement.

* If any claims have been determined allowable, you may be eligible to benefit from the **Patent Prosecution Highway** program at a participating intellectual property office for the corresponding application. For more information, please see http://www.uspto.gov/patents/init_events/pph/index.jsp or send an inquiry to PPHfeedback@uspto.gov.

Application Papers

10)☐ The specification is objected to by the Examiner.

11)☒ The drawing(s) filed on *08 August 2013* is/are: a)☒ accepted or b)☐ objected to by the Examiner.

Applicant may not request that any objection to the drawing(s) be held in abeyance. See 37 CFR 1.85(a).

Replacement drawing sheet(s) including the correction is required if the drawing(s) is objected to. See 37 CFR 1.121(d).

Priority under 35 U.S.C. § 119

12)☐ Acknowledgment is made of a claim for foreign priority under 35 U.S.C. § 119(a)-(d) or (f).

Certified copies:

a)☐ All b)☐ Some** c)☐ None of the:

1.☐ Certified copies of the priority documents have been received.

2.☐ Certified copies of the priority documents have been received in Application No. _____.

3.☐ Copies of the certified copies of the priority documents have been received in this National Stage application from the International Bureau (PCT Rule 17.2(a)).

** See the attached detailed Office action for a list of the certified copies not received.

Attachment(s)

1) ☒ Notice of References Cited (PTO-892)

2) ☐ Information Disclosure Statement(s) (PTO/SB/08a and/or PTO/SB/08b) Paper No(s)/Mail Date _____.

3) ☐ Interview Summary (PTO-413) Paper No(s)/Mail Date. _____ .

4) ☐ Other: _____.

DETAILED ACTION

The present application is being examined under the pre-AIA first to invent provisions.

Double Patenting

The nonstatutory double patenting rejection is based on a judicially created doctrine grounded in public policy (a policy reflected in the statute) so as to prevent the unjustified or improper timewise extension of the "right to exclude" granted by a patent and to prevent possible harassment by multiple assignees. A nonstatutory double patenting rejection is appropriate where the claims at issue are not identical, but at least one examined application claim is not patentably distinct from the reference claim(s) because the examined application claim is either anticipated by, or would have been obvious over, the reference claim(s). See, e.g., *In re Berg*, 140 F.3d 1428, 46 USPQ2d 1226 (Fed. Cir. 1998); *In re Goodman*, 11 F.3d 1046, 29 USPQ2d 2010 (Fed. Cir. 1993); *In re Longi*, 759 F.2d 887, 225 USPQ 645 (Fed. Cir. 1985); *In re Van Ornum*, 686 F.2d 937, 214 USPQ 761 (CCPA 1982); *In re Vogel*, 422 F.2d 438, 164 USPQ 619 (CCPA 1970); and *In re Thorington*, 418 F.2d 528, 163 USPQ 644 (CCPA 1969).

A timely filed terminal disclaimer in compliance with 37 CFR 1.321(c) or 1.321(d) may be used to overcome an actual or provisional rejection based on a nonstatutory double patenting ground provided the reference application or patent either is shown to be commonly owned with this application, or claims an invention made as a result of

activities undertaken within the scope of a joint research agreement. A terminal disclaimer must be signed in compliance with 37 CFR 1.321(b).

The USPTO internet Web site contains terminal disclaimer forms which may be used. Please visit http://www.uspto.gov/forms/. The filing date of the application will determine what form should be used. A web-based eTerminal Disclaimer may be filled out completely online using web-screens. An eTerminal Disclaimer that meets all requirements is auto-processed and approved immediately upon submission. For more information about eTerminal Disclaimers, refer to http://www.uspto.gov/patents/process/file/efs/guidance/eTD-info-I.jsp.

Claims 1-27 are rejected on the ground of nonstatutory double patenting as being unpatentable over claims 1-27 of U.S. Patent No. 8,526,898. Although the claims at issue are not identical, they are not patentably distinct from each other because the claim language of the instant application comprises the same or broad version without new subject matter with respect to the parent patent.

Conclusion

In view or the cited Double Patenting rejection, the instant application comprises potentially allowable subject matter.

Any inquiry concerning this communication or earlier communications from the examiner should be directed to BLANE J. JACKSON whose telephone number is (571)272-7890. The examiner can normally be reached on Monday through Friday, 8:30 AM-5:30 PM, EST.

If attempts to reach the examiner by telephone are unsuccessful, the examiner's supervisor, Edward Urban can be reached on (571) 272-7899. The fax phone number for the organization where this application or proceeding is assigned is 571-273-8300.

Information regarding the status of an application may be obtained from the Patent Application Information Retrieval (PAIR) system. Status information for published applications may be obtained from either Private PAIR or Public PAIR. Status information for unpublished applications is available through Private PAIR only. For more information about the PAIR system, see http://pair-direct.uspto.gov. Should you have questions on access to the Private PAIR system, contact the Electronic Business Center (EBC) at 866-217-9197 (toll-free). If you would like assistance from a USPTO Customer Service Representative or access to the automated information system, call 800-786-9199 (IN USA OR CANADA) or 571-272-1000.

/BLANE J JACKSON/
Primary Examiner, Art Unit 2649

Notice of References Cited	Application/Control No. 13/962,871	Applicant(s)/Patent Under Reexamination REDDY ET AL.	
	Examiner BLANE J. JACKSON	Art Unit 2649	Page 1 of 2

U.S. PATENT DOCUMENTS

*		Document Number Country Code-Number-Kind Code	Date MM-YYYY	Name	Classification
*	A	US-5,590,156	12-1996	Carney, Ronald	375/316
*	B	US-5,705,949	01-1998	Alelyunas et al.	329/304
*	C	US-5,768,268	06-1998	Kline et al.	370/330
*	D	US-6,253,094	06-2001	Schmutz, Thomas R.	455/562.1
*	E	US-6,262,981	07-2001	Schmutz, Thomas R.	370/347
*	F	US-6,282,184	08-2001	Lehman et al.	370/342
*	G	US-6,735,421	05-2004	Claxton et al.	455/207
*	H	US-6,760,342	07-2004	Skones et al.	370/437
*	I	US-6,920,185	07-2005	Hinson, Scott R.	375/295
*	J	US-2003/0158614	08-2003	Friel et al.	700/94
*	K	US-2003/0228855	12-2003	Herz et al.	455/185.1
*	L	US-2004/0058661	03-2004	Hsu et al.	455/311
*	M	US-2007/0002961	01-2007	Hoctor et al.	375/267

FOREIGN PATENT DOCUMENTS

*		Document Number Country Code-Number-Kind Code	Date MM-YYYY	Country	Name	Classification
	N					
	O					
	P					
	Q					
	R					
	S					
	T					

NON-PATENT DOCUMENTS

*		Include as applicable: Author, Title Date, Publisher, Edition or Volume, Pertinent Pages)
	U	
	V	
	W	
	X	

*A copy of this reference is not being furnished with this Office action. (See MPEP § 707.05(a).)
Dates in MM-YYYY format are publication dates. Classifications may be US or foreign.

Notice of References Cited	Application/Control No. 13/962,871	Applicant(s)/Patent Under Reexamination REDDY ET AL.	
	Examiner BLANE J. JACKSON	Art Unit 2649	Page 2 of 2

U.S. PATENT DOCUMENTS

*		Document Number Country Code-Number-Kind Code	Date MM-YYYY	Name	Classification
*	A	US-2007/0032220	02-2007	Feher, Kamilo	455/404.1
*	B	US-2007/0179649	08-2007	Mitsuno, Makoto	700/094
*	C	US-2007/0263754	11-2007	Currivan et al.	375/349
*	D	US-2009/0075613	03-2009	Safarian et al.	455/232.1
*	E	US-2009/0258629	10-2009	Ritchey et al.	455/313
*	F	US-8,107,916	01-2012	Gatta et al.	455/285
*	G	US-8,331,886	12-2012	Wang et al.	455/132
	H	US-			
	I	US-			
	J	US-			
	K	US-			
	L	US-			
	M	US-			

FOREIGN PATENT DOCUMENTS

*		Document Number Country Code-Number-Kind Code	Date MM-YYYY	Country	Name	Classification
	N					
	O					
	P					
	Q					
	R					
	S					
	T					

NON-PATENT DOCUMENTS

*		Include as applicable: Author, Title Date, Publisher, Edition or Volume, Pertinent Pages)
	U	
	V	
	W	
	X	

*A copy of this reference is not being furnished with this Office action. (See MPEP § 707.05(a).)
Dates in MM-YYYY format are publication dates. Classifications may be US or foreign.

Index of Claims	Application/Control No.	Applicant(s)/Patent Under Reexamination
	13962871	REDDY ET AL.
	Examiner	**Art Unit**
	BLANE J JACKSON	2649

✓	Rejected	-	Cancelled	N	Non-Elected	A	Appeal
=	Allowed	÷	Restricted	I	Interference	O	Objected

☐ Claims renumbered in the same order as presented by applicant ☐ CPA ☐ T.D. ☐ R.1.47

CLAIM		DATE								
Final	Original	06/23/2014								
	1	✓								
	2	✓								
	3	✓								
	4	✓								
	5	✓								
	6	✓								
	7	✓								
	8	✓								
	9	✓								
	10	✓								
	11	✓								
	12	✓								
	13	✓								
	14	✓								
	15	✓								
	16	✓								
	17	✓								
	18	✓								
	19	✓								
	20	✓								
	21	✓								
	22	✓								
	23	✓								
	24	✓								
	25	✓								
	26	✓								
	27	✓								

UNITED STATES PATENT AND TRADEMARK OFFICE

UNITED STATES DEPARTMENT OF COMMERCE
United States Patent and Trademark Office
Address: COMMISSIONER FOR PATENTS
P.O. Box 1450
Alexandria, Virginia 22313-1450
www.uspto.gov

BIB DATA SHEET

CONFIRMATION NO. 3953

SERIAL NUMBER	FILING or 371(c) DATE	CLASS	GROUP ART UNIT	ATTORNEY DOCKET NO.
13/962,871	08/08/2013 **RULE**	348	2649	89194-002720US-883946

APPLICANTS
MAXLINEAR, INC., Carlsbad, CA, Assignee (with 37 CFR 1.172 Interest);

INVENTORS
Madhukar Reddy, Carlsbad, CA;
Curtis Ling, Carlsbad, CA;
Tim Gallagher, Carlsbad, CA;

**** CONTINUING DATA ***************************
This application is a CON of 12/762,900 04/19/2010 PAT 8526898
which claims benefit of 61/170,526 04/17/2009

**** FOREIGN APPLICATIONS ****************************

**** IF REQUIRED, FOREIGN FILING LICENSE GRANTED **** ** SMALL ENTITY **
08/23/2013

Foreign Priority claimed	☐ Yes ☑ No	☐ Met after Allowance	STATE OR COUNTRY	SHEETS DRAWINGS	TOTAL CLAIMS	INDEPENDENT CLAIMS
35 USC 119(a-d) conditions met	☐ Yes ☑ No		CA	10	27	3
Verified and Acknowledged	/BLANE J JACKSON/ Examiner's Signature	Initials				

ADDRESS
KILPATRICK TOWNSEND & STOCKTON LLP
TWO EMBARCADERO CENTER
EIGHTH FLOOR
SAN FRANCISCO, CA 94111-3834
UNITED STATES

TITLE
WIDEBAND TUNER ARCHITECTURE

FILING FEE RECEIVED		
1080	FEES: Authority has been given in Paper No._____ to charge/credit DEPOSIT ACCOUNT No._____ for following:	☐ All Fees ☐ 1.16 Fees (Filing) ☐ 1.17 Fees (Processing Ext. of time) ☐ 1.18 Fees (Issue) ☐ Other _____ ☐ Credit

BIB (Rev. 05/07).

Search Notes	Application/Control No.	Applicant(s)/Patent Under Reexamination
	13962871	REDDY ET AL.
	Examiner	**Art Unit**
	BLANE J JACKSON	2649

CPC- SEARCHED		
Symbol	**Date**	**Examiner**

CPC COMBINATION SETS - SEARCHED		
Symbol	**Date**	**Examiner**
H04B 1/16	06/23/14	BJJ

US CLASSIFICATION SEARCHED			
Class	**Subclass**	**Date**	**Examiner**
455	132, 140, 179.1, 180.1, 188.1, 189.1,313, 315, 323, 324,324, 325, 334	06/23/14	BJJ

SEARCH NOTES		
Search Notes	**Date**	**Examiner**
Search of East database; review of parent IDS and prior art to DP	06/23/14	BJJ

INTERFERENCE SEARCH			
US Class/ CPC Symbol	**US Subclass / CPC Group**	**Date**	**Examiner**

EAST Search History

EAST Search History (Prior Art)

Ref #	Hits	Search Query	DBs	Default Operator	Plurals	Time Stamp
L1	4	"8526898".pn.	US-PGPUB; USPAT; USOCR; FPRS; EPO; JPO; DERWENT; IBM_TDB	OR	ON	2014/06/23 10:12
L2	18	("20030158614" | "20030228855" | "20040058661" | "20070002961" | "20070032220" | "20070179649" | "20070263754" | "20090075613" | "20090258629" | "5590156" | "5705949" | "5768268" | "6253094" | "6262981" | "6282184" | "6735421" | "6760342" | "6920185").PN.	US-PGPUB; USPAT; USOCR	OR	OFF	2014/06/23 10:12
L3	251	(H04B or 455/130-334.ccls.) and (cable or DOCSIS) and channel with mix$4 with (IF or baseband)	US-PGPUB; USPAT; USOCR; FPRS; EPO; JPO; DERWENT; IBM_TDB	OR	ON	2014/06/23 10:19
L4	33	(H04B or 455/130-334.ccls.) and (cable or DOCSIS) same channel with mix$4 with (IF or baseband)	US-PGPUB; USPAT; USOCR; FPRS; EPO; JPO; DERWENT; IBM_TDB	OR	ON	2014/06/23 10:20
L5	96	(H04B or 455/179.1-191.3.ccls.) and (cable or DOCSIS) same tuner same channel with mix$4	US-PGPUB; USPAT; USOCR; FPRS; EPO; JPO; DERWENT; IBM_TDB	OR	ON	2014/06/23 10:26
L6	53471	(H04B or 455/187.1.ccls.) and (cable or DOCSIS)	US-PGPUB; USPAT; USOCR; FPRS; EPO; JPO; DERWENT; IBM_TDB	OR	ON	2014/06/23 10:33
L7	61152	(H04B 1/16 or 455/187.1.ccls.) and (cable or DOCSIS)	US-PGPUB; USPAT; USOCR; FPRS; EPO; JPO; DERWENT; IBM_TDB	OR	ON	2014/06/23 10:36

L8	0	(455/187.1.ccls.) and (cable or DOCSIS) same tuner same digital with baseband	US-PGPUB; USPAT; USOCR; FPRS; EPO; JPO; DERWENT; IBM_TDB	OR	ON	2014/06/23 10:37
L9	7	(455/187.1.ccls.) and (cable or DOCSIS) same tuner	US-PGPUB; USPAT; USOCR; FPRS; EPO; JPO; DERWENT; IBM_TDB	OR	ON	2014/06/23 10:37
L10	7	("20080187038" | "20100067630" | "6754508" | "7006162" | "7031686").PN. OR ("8107916").URPN.	US-PGPUB; USPAT; USOCR	OR	OFF	2014/06/23 10:39
L11	32	Reddy-Madhukar.in.	US-PGPUB; USPAT; USOCR; FPRS; EPO; JPO; DERWENT; IBM_TDB	OR	ON	2014/06/23 10:43

6/23/2014 10:45:15 AM

To: ipefiling@kilpatricktownsend.com,jlhice@kilpatrick.foundationip.com,
From: PAIR_eOfficeAction@uspto.gov
Cc: PAIR_eOfficeAction@uspto.gov
Subject: Private PAIR Correspondence Notification for Customer Number 20350

Jun 27, 2014 05:34:45 AM

Dear PAIR Customer:

KILPATRICK TOWNSEND & STOCKTON LLP
TWO EMBARCADERO CENTER
EIGHTH FLOOR
SAN FRANCISCO, CA 94111-3834
UNITED STATES

The following USPTO patent application(s) associated with your Customer Number, 20350 , have new outgoing correspondence. This correspondence is now available for viewing in Private PAIR.

The official date of notification of the outgoing correspondence will be indicated on the form PTOL-90 accompanying the correspondence.

Disclaimer:
The list of documents shown below is provided as a courtesy and is not part of the official file wrapper. The content of the images shown in PAIR is the official record.

Application	Document	Mailroom Date	Attorney Docket No.
13962871	CTNF	06/27/2014	89194-002720US-883946
	892	06/27/2014	89194-002720US-883946

To view your correspondence online or update your email addresses, please visit us anytime at https://sportal.uspto.gov/secure/myportal/privatepair.

If you have any questions, please email the Electronic Business Center (EBC) at EBC@uspto.gov with 'e-Office Action' on the subject line or call 1-866-217-9197 during the following hours:

Monday - Friday 6:00 a.m. to 12:00 a.m.

Thank you for prompt attention to this notice,

UNITED STATES PATENT AND TRADEMARK OFFICE

PATENT APPLICATION INFORMATION RETRIEVAL SYSTEM

IN THE UNITED STATES PATENT AND TRADEMARK OFFICE

In re Application of:
Madhukar Reddy et al.
Application No.: 13/962,871
Filed: August 8, 2013
For: WIDEBAND TUNER ARCHITECTURE
Customer No.: 20350

Confirmation No.: 3953
Examiner: Blane J Jackson
Technology Center/Art Unit: 2649

AMENDMENT

Mail Stop Amendment
Commissioner for Patents
P.O. Box 1450
Alexandria, VA 22313-1450

Commissioner:

In response to the Office Action mailed June 27, 2014, please enter the following amendments and remarks:

Amendments to the Claims are reflected in the listing of claims which begins on page 2 of this paper.

Remarks/Arguments begin on page 8 of this paper.

Amendments to the Claims:

This listing of claims will replace all prior versions, and listings of claims in the application:

Listing of Claims:

1. (Original) A wideband receiver system comprising:

a wideband receiver configured to concurrently receive a plurality of desired RF channels; said wideband receiver comprising:

a mixer module coupled to the plurality of desired RF channels and having a first mixer configured to generate an in-phase signal and a second mixer configured to generate a quadrature signal;

a wideband analog-to-digital converter (ADC) module having a first wideband ADC coupled with the in-phase signal and configured to generate a digitalized in-phase signal and a second wideband ADC coupled with the quadrature signal and configured to generate a digitalized quadrature signal; and

a digital frontend (DFE) module having a plurality of complex mixers coupled to the digital in-phase and quadrature signals, each one of the plurality of complex mixers frequency-shifting a different one of the plurality of the desired RF channels to a baseband signal.

2. (Original) The system of claim 1 further comprises a local oscillator having an oscillator frequency centered around the plurality of the desired RF channels.

3. (Original) The system of claim 2 wherein the local oscillator comprises a phase-locked loop.

4. (Original) The system of claim 1 wherein the plurality of desired RF channels conform to a Data Over Cable Service Interface Specification (DOCSIS) protocol.

5. (Original) The system of claim 1 wherein each one of the plurality of complex mixers comprises a pair of digital multipliers, each pair of the digital multipliers is coupled to a numerically controlled oscillator.

6. (Original) The system of claim 1 wherein the DFE module further comprises a plurality of channel filters, each one of the plurality of channel filters is coupled to

each one of the plurality of complex mixers and configured to filter one of the plurality of the desired channels.

7. (Original) The system of claim 6 wherein each one of the plurality of channel filters is a finite impulse response filter.

8. (Original) The system of claim 1 wherein the DFE module further comprises a decimator module configured to decimate each one of the plurality of the desired channels in the baseband.

9. (Original) The system of claim 1 wherein the DFE module further comprises a digital interface module configured to communicate the decimated plurality of the desired channels to a demodulator.

10. (Original) The system of claim 1 further comprising:

an up-converter module configured to frequency-shift the plurality of desired RF channels in the baseband to an intermediate frequency band.

11. (Original) The system of claim 10 wherein the up-converter module comprises a plurality of N up-mixers having a plurality of associated oscillator frequencies,

wherein N is an integer value equal to the plurality of the desired RF channels;

wherein the plurality of associated oscillator frequencies are so chosen so that when mixing with the plurality of desired channels in the baseband, the mixed products occupy a contiguous frequency spectrum, or a substantially-contiguous frequency spectrum with one or more spacings between the desired channels,

wherein the one or more spacings are variable, and

wherein the one or more spacings are smaller than or comparable to a channel bandwidth, or small measured as a fraction of the bandwidth of the first and second wideband ADCs.

12. (Original) The system of claim 11 wherein the mixed products comprise spectra that are spaced in such a way so as to avoid overlap with known frequency bands containing potential or actual interferers.

13. (Original) The system of claim 11 wherein the mixed products comprise spectra that are spaced in such a way so as to avoid overlap with known frequency bands that introduce interference to other systems.

14. (Original) The system of claim 11 wherein each one of the plurality of N up-mixers is a digital complex mixer and each one of the plurality of associated oscillator frequencies is generated by a numerically controlled oscillator.

15. (Original) The system of claim 1 further comprises a digital-to-analog converter configured to convert the contiguous group of channels in the intermediate frequency spectrum to an analog waveform.

16. (Original) A multi-tuner receiver system for receiving a plurality of desired radio frequency (RF) channels that extend over multiple non-contiguous portions of a broad frequency spectrum and grouping them in a contiguous frequency spectrum, the system comprising:

a first tuner configured to receive a first portion of the broad frequency spectrum, the first tuner includes a first mixer module coupled to a first oscillator and is configured to generate a first in-phase signal and a first quadrature signal;

a second tuner configured to receive a second portion of the broad frequency spectrum, the second tuner includes a second mixer module coupled to a second oscillator and is configured to generate a second in-phase signal and a second quadrature signal;

a first analog-to-digital converter module configured to digitize the first in-phase and quadrature signals;

a second analog-to-digital converter module configured to digitize the second in-phase and quadrature signals;

a first digital frontend (DFE) module having a first bank of down-mixers coupled to the first digital in-phase and quadrature signals, each of the first bank of down-mixers is configured to frequency shift one of the desired RF channels in the first portion of the broad frequency spectrum; and

a second digital frontend (DFE) module having a second bank of down-mixers coupled to the second digital in-phase and quadrature signals, each of the second bank of down-mixers is configured to frequency shift one of the desired RF channels in the second portion of the broad frequency spectrum;

wherein the first DFE module frequency-shifts the desired RF channels in the first portion of the broad frequency spectrum to a first portion of a baseband signal;

wherein the second DFE module frequency-shifts the desired RF channels in the second portion of the broad frequency spectrum to a second portion of the baseband signal.

17. (Original) The multi-tuner receiver system of claim 16 further comprising a crossbar switch interposed between the first and second analog-to-digital converter modules and the first and second DFE modules.

18. (Original) The multi-tuner receiver system of claim 16 further comprises:

a first up-converter module having a first bank of up-mixers coupled to the first portion of the baseband signal and configured to frequency shift the first portion of the baseband signal to a first portion of an intermediate frequency spectrum;

a second up-converter module having a second bank of up-mixers coupled to the second portion of the baseband signal and configured to frequency shift the second portion of the baseband signal to a second portion of the intermediate frequency spectrum; and

a digital-to-analog converter configured to convert the first and second portions of the intermediate frequency spectrum to an analog waveform signal.

19. (Original) The multi-tuner receiver system of claim 18 further comprising a crossbar switch interposed between the first and second DFE modules and the first and second up-converter modules.

20. (Original) The multi-tuner receiver system of claim 16 wherein the first and second portions are adjacent to each other and non-overlapping.

21. (Original) The multi-tuner receiver system of claim 16 wherein each one of the first bank of down-mixers comprises a pair of digital multiplier having an input terminal coupled to a numerically controlled oscillator.

22. (Original) The multi-tuner receiver system of claim 16 wherein the first DFE module further comprises a plurality of channel filters, each one of the plurality of channel filters is coupled to each one of the first bank of down-mixers and configured to filter one of the frequency down-shifted RF channels.

23. (Original) The multi-tuner receiver system of claim 16 wherein the plurality of desired RF channels conform to one of a digital video broadcasting (DVB) standard.

24. (Original) The multi-tuner receiver system of claim 16 wherein the plurality of desired RF channels conform to a Data Over Cable Service Interface Specification (DOCSIS) protocol.

25. (Original) The multi-tuner receiver system of claim 16 wherein the plurality of RF channels conform to a television broadcasting standard.

26. (Original) A method of receiving a plurality of radio frequency (RF) channels including a number of desired channels that are located in non-contiguous portions of a frequency spectrum and grouping the desired channels in a contiguous frequency spectrum, the method comprising:

concurrently receiving the plurality of RF channels;

producing an in-phase signal and a quadrature signal by mixing the plurality of RF channels with a first oscillator frequency and a second local frequency;

digitizing the in-phase and quadrature signals; and

frequency down-shifting the digital in-phase and quadrature signals to a baseband signal using a number of complex mixers,

wherein the first and second oscillator frequencies are identical and have a phase shift of 90° degree between them,

wherein the number of complex mixers correspond to the number of desired channels.

27. (Original) The method of claim 26 further comprises:

frequency up-shifting the baseband signal to an intermediate frequency; and

converting the frequency up-shifted baseband signal to an analog waveform.

REMARKS/ARGUMENTS

Claims 1-27 stand rejected on the ground of nonstatutory double patenting as being unpatentable over claims 1-27 of U.S. Patent No. 8,526,898. A terminal disclaimer is being submitted herewith to overcome these rejections.

In view of the foregoing, Applicants believe all claims now pending in this Application are in condition for allowance. The issuance of a formal Notice of Allowance at an early date is respectfully requested. The Director is authorized to charge any additional fees during pendency of this application, including any required extension of time fees, or credit any overpayment to Deposit Account Number 20-1430. This paragraph is intended to be a constructive petition for extension of time in accordance with 37 C.F.R. § 1.136(a)(3).

If the Examiner believes a telephone conference would expedite prosecution of this application, please contact the undersigned at (650) 326-2400 or atabibi@kilpatricktownsend.com.

Respectfully submitted,

/Ardeshir Tabibi/
Ardeshir Tabibi
Registration No. 48,750

KILPATRICK TOWNSEND & STOCKTON LLP
Two Embarcadero Center, Eighth Floor
San Francisco, CA 94111

A1T/lmh

Electronic Patent Application Fee Transmittal

Application Number:	13962871
Filing Date:	08-Aug-2013
Title of Invention:	WIDEBAND TUNER ARCHITECTURE
First Named Inventor/Applicant Name:	Madhukar Reddy
Filer:	Ardeshir Tabibi/Yvonne Mock
Attorney Docket Number:	89194-002720US-883946

Filed as Small Entity

Utility under 35 USC 111(a) Filing Fees

Description	Fee Code	Quantity	Amount	Sub-Total in USD($)
Basic Filing:				
Pages:				
Claims:				
Miscellaneous-Filing:				
Petition:				
Patent-Appeals-and-Interference:				
Post-Allowance-and-Post-Issuance:				
Extension-of-Time:				
Extension - 1 month with $0 paid	2251	1	100	100

Description	Fee Code	Quantity	Amount	Sub-Total in USD($)
Miscellaneous:				
Statutory or Terminal Disclaimer	1814	1	160	160
		Total in USD ($)		**260**

Electronic Acknowledgement Receipt

EFS ID:	20502708
Application Number:	13962871
International Application Number:	
Confirmation Number:	3953
Title of Invention:	WIDEBAND TUNER ARCHITECTURE
First Named Inventor/Applicant Name:	Madhukar Reddy
Customer Number:	20350
Filer:	Ardeshir Tabibi/Yvonne Mock
Filer Authorized By:	Ardeshir Tabibi
Attorney Docket Number:	89194-002720US-883946
Receipt Date:	23-OCT-2014
Filing Date:	08-AUG-2013
Time Stamp:	17:22:06
Application Type:	Utility under 35 USC 111(a)

Payment information:

Submitted with Payment	yes
Payment Type	Credit Card
Payment was successfully received in RAM	$260
RAM confirmation Number	3855
Deposit Account	201430
Authorized User	TABIBI, ARDESHIR

The Director of the USPTO is hereby authorized to charge indicated fees and credit any overpayment as follows:

Charge any Additional Fees required under 37 C.F.R. Section 1.19 (Document supply fees)

Charge any Additional Fees required under 37 C.F.R. Section 1.21 (Miscellaneous fees and charges)

File Listing:

Document Number	Document Description	File Name	File Size(Bytes)/ Message Digest	Multi Part /.zip	Pages (if appl.)
1	Terminal Disclaimer Filed	TD_89194-002720US-883946.pdf	69810 ba84601a563d589be2d2bed6a24b1fb3ac2ee6de	no	1
Warnings:					
Information:					
2	Fee Worksheet (SB06)	EXT_89194-002720US-883946.pdf	118347 f19da8956e760f9899dae5f073edcccc2d996da6	no	1
Warnings:					
Information:					
3		AMD_89194-002720US-883946.pdf	83712 c2483f1baa5ca0e74e652d1d57b9c8508a53b665	yes	8

Multipart Description/PDF files in .zip description

Document Description	Start	End
Amendment/Req. Reconsideration-After Non-Final Reject	1	1
Claims	2	7
Applicant Arguments/Remarks Made in an Amendment	8	8

Warnings:					
Information:					
4	Fee Worksheet (SB06)	fee-info.pdf	32322 78d068e7dcae85bc5865e38592b37bb269aebfef	no	2
Warnings:					
Information:					
			Total Files Size (in bytes):	304191	

This Acknowledgement Receipt evidences receipt on the noted date by the USPTO of the indicated documents, characterized by the applicant, and including page counts, where applicable. It serves as evidence of receipt similar to a Post Card, as described in MPEP 503.

New Applications Under 35 U.S.C. 111
If a new application is being filed and the application includes the necessary components for a filing date (see 37 CFR 1.53(b)-(d) and MPEP 506), a Filing Receipt (37 CFR 1.54) will be issued in due course and the date shown on this Acknowledgement Receipt will establish the filing date of the application.

National Stage of an International Application under 35 U.S.C. 371
If a timely submission to enter the national stage of an international application is compliant with the conditions of 35 U.S.C. 371 and other applicable requirements a Form PCT/DO/EO/903 indicating acceptance of the application as a national stage submission under 35 U.S.C. 371 will be issued in addition to the Filing Receipt, in due course.

New International Application Filed with the USPTO as a Receiving Office
If a new international application is being filed and the international application includes the necessary components for an international filing date (see PCT Article 11 and MPEP 1810), a Notification of the International Application Number and of the International Filing Date (Form PCT/RO/105) will be issued in due course, subject to prescriptions concerning national security, and the date shown on this Acknowledgement Receipt will establish the international filing date of the application.

PTO/ SB/26 (08-11)
Approved for use through 07/31/2012. OMB 0651-0031
U.S. Patent and Trademark Office; U.S. DEPARTMENT OF COMMERCE
Under the Paperwork Reduction Act of 1995, no persons are required to respond to a collection of information unless it displays a valid OMB control number.

TERMINAL DISCLAIMER TO OBVIATE A DOUBLE PATENTING REJECTION OVER A "PRIOR" PATENT	Docket Number (Optional) 89194-002720US-883946

In re Application of: Madhukar Reddy

Application No. 13/962,871

Filed: August 8, 2013

For: WIDEBAND TUNER ARCHITECTURE

The owner*, MaxLinear, Inc., of 100 percent interest in the instant application hereby disclaims, except as provided below, the terminal part of the statutory term of any patent granted on the instant application which would extend beyond the expiration date of the full statutory term **prior patent** No. 8,526,898 as the term of said prior patent is defined in 35 U.S.C. 154 and 173, and as the term of said **prior patent** is presently shortened by any terminal disclaimer. The owner hereby agrees that any patent so granted on the instant application shall be enforceable only for and during such period that it and the **prior patent** are commonly owned. This agreement runs with any patent granted on the instant application and is binding upon the grantee, its successors or assigns.

In making the above disclaimer, the owner does not disclaim the terminal part of the term of any patent granted on the instant application that would extend to the expiration date of the full statutory term as defined in 35 U.S.C. 154 and 173 of the **prior patent**, "as the term of said **prior patent** is presently shortened by any terminal disclaimer," in the event that said **prior patent** later:

expires for failure to pay a maintenance fee;
is held unenforceable;
is found invalid by a court of competent jurisdiction;
is statutorily disclaimed in whole or terminally disclaimed under 37 CFR 1.321;
has all claims canceled by a reexamination certificate;
is reissued; or
is in any manner terminated prior to the expiration of its full statutory term as presently shortened by any terminal disclaimer.

Check either box 1 or 2 below, if appropriate.

1. ☐ For submissions on behalf of a business/organization (e.g., corporation, partnership, university, government agency, etc.), the undersigned is empowered to act on behalf of the business/organization.

I hereby declare that all statements made herein of my own knowledge are true and that all statements made on information and belief are believed to be true; and further that these statements were made with the knowledge that willful false statements and the like so made are punishable by fine or imprisonment, or both, under Section 1001 of Title 18 of the United States Code and that such willful false statements may jeopardize the validity of the application or any patent issued thereon.

2. ☒ The undersigned is an attorney of record. Reg. No. 48,750

/Ardeshir Tabibi/ October 23, 2014

Date

Ardeshir Tabibi

Typed or printed name

650-326-2400

Telephone Number

☒ Terminal disclaimer fee under 37 CFR 1.20(d) is included.

WARNING: Information on this form may become public. Credit card information should not be included on this form. Provide credit card information and authorization on PTO-2038.

*Statement under 37 CFR 3.73(b) is required if terminal disclaimer is signed by the assignee (owner). Form PTO/SB/96 may be used for making this certification. See MPEP § 324.

This collection of information is required by 37 CFR 1.321. The information is required to obtain or retain a benefit by the public which is to file (and by the USPTO to process) an application. Confidentiality is governed by 35 U.S.C. 122 and 37 CFR 1.11 and 1.14. This collection is estimated to take 12 minutes to complete, including gathering, preparing, and submitting the completed application form to the USPTO. Time will vary depending upon the individual case. Any comments on the amount of time you require to complete this form and/or suggestions for reducing this burden, should be sent to the Chief Information Officer, U.S. Patent and Trademark Office, U.S. Department of Commerce, P.O. Box 1450, Alexandria, VA 22313-1450. DO NOT SEND FEES OR COMPLETED FORMS TO THIS ADDRESS. **SEND TO: Commissioner for Patents, P.O. Box 1450, Alexandria, VA22313-1450.**

If you need assistance in completing the form, call 1-800-PTO-9199 and select option 2.

PTO/SB/22 (03-13)
Approved for use through 03/31/2013. OMB 0651-0031
U.S. Patent and Trademark Office; U.S. DEPARTMENT OF COMMERCE
Under the Paperwork Reduction Act of 1995, no persons are required to respond to a collection of information unless it displays a valid OMB control number.

PETITION FOR EXTENSION OF TIME UNDER 37 CFR 1.136(a)	Docket Number (Optional) 89194-002720US-883946
Application Number 13/962,871	Filed August 8, 2013
For WIDEBAND TUNER ARCHITECTURE	
Art Unit 2649	Examiner Blane J Jackson

This is a request under the provisions of 37 CFR 1.136(a) to extend the period for filing a reply in the above identified application.

The requested extension and fee are as follows (check time period desired and enter the appropriate fee below):

	Fee	Small Entity Fee	Micro Entity Fee	
☒ One month (37 CFR 1.17(a)(1))	$200	$100	$50	$100
☐ Two months (37 CFR 1.17(a)(2))	$600	$300	$150	$_____
☐ Three months (37 CFR 1.17(a)(3))	$1,400	$700	$350	$_____
☐ Four months (37 CFR 1.17(a)(4))	$2,200	$1,100	$550	$_____
☐ Five months (37 CFR 1.17(a)(5))	$3,000	$1,500	$750	$_____

☒ Applicant asserts small entity status. See 37 CFR 1.27.

☐ Applicant certifies micro entity status. See 37 CFR 1.29.
Form PTO/SB/15A or B or equivalent must either be enclosed or have been submitted previously.

☐ A check in the amount of the fee is enclosed.

☒ Payment by credit card. Form PTO-2038 is attached.

☐ The Director has already been authorized to charge fees in this application to a Deposit Account.

☒ The Director is hereby authorized to charge any fees which may be required, or credit any overpayment, to Deposit Account Number 20-1430.

☒ Payment made via EFS-Web.

WARNING: Information on this form may become public. Credit card information should not be included on this form. Provide credit card information and authorization on PTO-2038.

I am the

☐ applicant/inventor.

☐ assignee of record of the entire interest. See 37 CFR 3.71 Statement under 37 CFR 3.73(b) is enclosed. (Form PTO/SB/96).

☒ attorney or agent of record. Registration Number 48,750

☐ attorney or agent acting under 37 CFR 1.34. Registration number _____

/Ardeshir Tabibi/	October 23, 2014
Signature	Date
Ardeshir Tabibi	(650) 326-2400
Typed or printed name	Telephone Number

NOTE: This form must be signed in accordance with 37 CFR 1.33. See 37 CFR 1.4 for signature requirements and certifications. Submit multiple forms if more than one signature is required, see below*.

☒ Total of 1 form is submitted.

This collection of information is required by 37 CFR 1.136(a). The information is required to obtain or retain a benefit by the public which is to file (and by the USPTO to process) an application. Confidentiality is governed by 35 U.S.C. 122 and 37 CFR 1.11 and 1.14. This collection is estimated to take 6 minutes to complete, including gathering, preparing, and submitting the completed application form to the USPTO. Time will vary depending upon the individual case. Any comments on the amount of time you require to complete this form and/or suggestions for reducing this burden, should be sent to the Chief Information Officer, U.S. Patent and Trademark Office, U.S. Department of Commerce, P.O. Box 1450, Alexandria, VA 22313-1450. DO NOT SEND FEES OR COMPLETED FORMS TO THIS ADDRESS. **SEND TO: Commissioner for Patents, P.O. Box 1450, Alexandria, VA 22313-1450.**

If you need assistance in completing the form, call 1-800-PTO-9199 and select option 2.

Application Number	Application/Control No.	Applicant(s)/Patent under Reexamination	
	13/962,871	REDDY ET AL.	

Document Code - DISQ	Internal Document – DO NOT MAIL

TERMINAL DISCLAIMER	☒ APPROVED	☐ DISAPPROVED
Date Filed : 10/23/14	This patent is subject to a Terminal Disclaimer	

Approved/Disapproved by:

Janice Ford

U.S. Patent and Trademark Office

PTO/SB/06 (09-11)
Approved for use through 1/31/2014. OMB 0651-0032
U.S. Patent and Trademark Office; U.S. DEPARTMENT OF COMMERCE
Under the Paperwork Reduction Act of 1995, no persons are required to respond to a collection of information unless it displays a valid OMB control number.

PATENT APPLICATION FEE DETERMINATION RECORD

Substitute for Form PTO-875

Application or Docket Number	Filing Date	
13/962,871	08/08/2013	☐ To be Mailed

ENTITY: ☐ LARGE ☒ SMALL ☐ MICRO

APPLICATION AS FILED – PART I

FOR	(Column 1) NUMBER FILED	(Column 2) NUMBER EXTRA	RATE ($)	FEE ($)
☐ BASIC FEE (37 CFR 1.16(a), (b), or (c))	N/A	N/A	N/A	
☐ SEARCH FEE (37 CFR 1.16(k), (i), or (m))	N/A	N/A	N/A	
☐ EXAMINATION FEE (37 CFR 1.16(o), (p), or (q))	N/A	N/A	N/A	
TOTAL CLAIMS (37 CFR 1.16(i))	minus 20 =	*	x $ =	
INDEPENDENT CLAIMS (37 CFR 1.16(h))	minus 3 =	*	x $ =	
☐ APPLICATION SIZE FEE (37 CFR 1.16(s))	If the specification and drawings exceed 100 sheets of paper, the application size fee due is $310 ($155 for small entity) for each additional 50 sheets or fraction thereof. See 35 U.S.C. 41(a)(1)(G) and 37 CFR 1.16(s).			
☐ MULTIPLE DEPENDENT CLAIM PRESENT (37 CFR 1.16(j))				
* If the difference in column 1 is less than zero, enter "0" in column 2.			TOTAL	

APPLICATION AS AMENDED – PART II

AMENDMENT

10/23/2014	(Column 1) CLAIMS REMAINING AFTER AMENDMENT		(Column 2) HIGHEST NUMBER PREVIOUSLY PAID FOR	(Column 3) PRESENT EXTRA	RATE ($)	ADDITIONAL FEE ($)
Total (37 CFR 1.16(i))	* 27	Minus	** 27	= 0	x $40 =	0
Independent (37 CFR 1.16(h))	* 3	Minus	***3	= 0	x $210 =	0
☐ Application Size Fee (37 CFR 1.16(s))						
☐ FIRST PRESENTATION OF MULTIPLE DEPENDENT CLAIM (37 CFR 1.16(j))						
					TOTAL ADD'L FEE	0

AMENDMENT

	(Column 1) CLAIMS REMAINING AFTER AMENDMENT		(Column 2) HIGHEST NUMBER PREVIOUSLY PAID FOR	(Column 3) PRESENT EXTRA	RATE ($)	ADDITIONAL FEE ($)
Total (37 CFR 1.16(i))	*	Minus	**	=	x $ =	
Independent (37 CFR 1.16(h))	*	Minus	***	=	x $ =	
☐ Application Size Fee (37 CFR 1.16(s))						
☐ FIRST PRESENTATION OF MULTIPLE DEPENDENT CLAIM (37 CFR 1.16(j))						
					TOTAL ADD'L FEE	

* If the entry in column 1 is less than the entry in column 2, write "0" in column 3.
** If the "Highest Number Previously Paid For" IN THIS SPACE is less than 20, enter "20".
*** If the "Highest Number Previously Paid For" IN THIS SPACE is less than 3, enter "3".
The "Highest Number Previously Paid For" (Total or Independent) is the highest number found in the appropriate box in column 1.

LIE
/TRACEY BELL/

This collection of information is required by 37 CFR 1.16. The information is required to obtain or retain a benefit by the public which is to file (and by the USPTO to process) an application. Confidentiality is governed by 35 U.S.C. 122 and 37 CFR 1.14. This collection is estimated to take 12 minutes to complete, including gathering, preparing, and submitting the completed application form to the USPTO. Time will vary depending upon the individual case. Any comments on the amount of time you require to complete this form and/or suggestions for reducing this burden, should be sent to the Chief Information Officer, U.S. Patent and Trademark Office, U.S. Department of Commerce, P.O. Box 1450, Alexandria, VA 22313-1450. DO NOT SEND FEES OR COMPLETED FORMS TO THIS ADDRESS. **SEND TO: Commissioner for Patents, P.O. Box 1450, Alexandria, VA 22313-1450.**
If you need assistance in completing the form, call 1-800-PTO-9199 and select option 2.

UNITED STATES PATENT AND TRADEMARK OFFICE

UNITED STATES DEPARTMENT OF COMMERCE
United States Patent and Trademark Office
Address: COMMISSIONER FOR PATENTS
P.O. Box 1450
Alexandria, Virginia 22313-1450
www.uspto.gov

NOTICE OF ALLOWANCE AND FEE(S) DUE

20350 7590 11/26/2014
KILPATRICK TOWNSEND & STOCKTON LLP
TWO EMBARCADERO CENTER
EIGHTH FLOOR
SAN FRANCISCO, CA 94111-3834

EXAMINER
JACKSON, BLANE J

ART UNIT	PAPER NUMBER
2649	

DATE MAILED: 11/26/2014

APPLICATION NO.	FILING DATE	FIRST NAMED INVENTOR	ATTORNEY DOCKET NO.	CONFIRMATION NO.
13/962,871	08/08/2013	Madhukar Reddy	89194-002720US-883946	3953

TITLE OF INVENTION: WIDEBAND TUNER ARCHITECTURE

APPLN. TYPE	ENTITY STATUS	ISSUE FEE DUE	PUBLICATION FEE DUE	PREV. PAID ISSUE FEE	TOTAL FEE(S) DUE	DATE DUE
nonprovisional	SMALL	$480	$0	$0	$480	02/26/2015

THE APPLICATION IDENTIFIED ABOVE HAS BEEN EXAMINED AND IS ALLOWED FOR ISSUANCE AS A PATENT. PROSECUTION ON THE MERITS IS CLOSED. THIS NOTICE OF ALLOWANCE IS NOT A GRANT OF PATENT RIGHTS. THIS APPLICATION IS SUBJECT TO WITHDRAWAL FROM ISSUE AT THE INITIATIVE OF THE OFFICE OR UPON PETITION BY THE APPLICANT. SEE 37 CFR 1.313 AND MPEP 1308.

THE ISSUE FEE AND PUBLICATION FEE (IF REQUIRED) MUST BE PAID WITHIN THREE MONTHS FROM THE MAILING DATE OF THIS NOTICE OR THIS APPLICATION SHALL BE REGARDED AS ABANDONED. THIS STATUTORY PERIOD CANNOT BE EXTENDED. SEE 35 U.S.C. 151. THE ISSUE FEE DUE INDICATED ABOVE DOES NOT REFLECT A CREDIT FOR ANY PREVIOUSLY PAID ISSUE FEE IN THIS APPLICATION. IF AN ISSUE FEE HAS PREVIOUSLY BEEN PAID IN THIS APPLICATION (AS SHOWN ABOVE), THE RETURN OF PART B OF THIS FORM WILL BE CONSIDERED A REQUEST TO REAPPLY THE PREVIOUSLY PAID ISSUE FEE TOWARD THE ISSUE FEE NOW DUE.

HOW TO REPLY TO THIS NOTICE:

I. Review the ENTITY STATUS shown above. If the ENTITY STATUS is shown as SMALL or MICRO, verify whether entitlement to that entity status still applies.

If the ENTITY STATUS is the same as shown above, pay the TOTAL FEE(S) DUE shown above.

If the ENTITY STATUS is changed from that shown above, on PART B - FEE(S) TRANSMITTAL, complete section number 5 titled "Change in Entity Status (from status indicated above)".

For purposes of this notice, small entity fees are 1/2 the amount of undiscounted fees, and micro entity fees are 1/2 the amount of small entity fees.

II. PART B - FEE(S) TRANSMITTAL, or its equivalent, must be completed and returned to the United States Patent and Trademark Office (USPTO) with your ISSUE FEE and PUBLICATION FEE (if required). If you are charging the fee(s) to your deposit account, section "4b" of Part B - Fee(s) Transmittal should be completed and an extra copy of the form should be submitted. If an equivalent of Part B is filed, a request to reapply a previously paid issue fee must be clearly made, and delays in processing may occur due to the difficulty in recognizing the paper as an equivalent of Part B.

III. All communications regarding this application must give the application number. Please direct all communications prior to issuance to Mail Stop ISSUE FEE unless advised to the contrary.

IMPORTANT REMINDER: Utility patents issuing on applications filed on or after Dec. 12, 1980 may require payment of maintenance fees. It is patentee's responsibility to ensure timely payment of maintenance fees when due.

PART B - FEE(S) TRANSMITTAL

Complete and send this form, together with applicable fee(s), to: Mail **Mail Stop ISSUE FEE**
Commissioner for Patents
P.O. Box 1450
Alexandria, Virginia 22313-1450
or Fax (571)-273-2885

INSTRUCTIONS: This form should be used for transmitting the ISSUE FEE and PUBLICATION FEE (if required). Blocks 1 through 5 should be completed where appropriate. All further correspondence including the Patent, advance orders and notification of maintenance fees will be mailed to the current correspondence address as indicated unless corrected below or directed otherwise in Block 1, by (a) specifying a new correspondence address; and/or (b) indicating a separate "FEE ADDRESS" for maintenance fee notifications.

CURRENT CORRESPONDENCE ADDRESS (Note: Use Block 1 for any change of address)

20350 7590 11/26/2014
KILPATRICK TOWNSEND & STOCKTON LLP
TWO EMBARCADERO CENTER
EIGHTH FLOOR
SAN FRANCISCO, CA 94111-3834

Note: A certificate of mailing can only be used for domestic mailings of the Fee(s) Transmittal. This certificate cannot be used for any other accompanying papers. Each additional paper, such as an assignment or formal drawing, must have its own certificate of mailing or transmission.

Certificate of Mailing or Transmission
I hereby certify that this Fee(s) Transmittal is being deposited with the United States Postal Service with sufficient postage for first class mail in an envelope addressed to the Mail Stop ISSUE FEE address above, or being facsimile transmitted to the USPTO (571) 273-2885, on the date indicated below.

(Depositor's name)
(Signature)
(Date)

APPLICATION NO.	FILING DATE	FIRST NAMED INVENTOR	ATTORNEY DOCKET NO.	CONFIRMATION NO.
13/962,871	08/08/2013	Madhukar Reddy	89194-002720US-883946	3953

TITLE OF INVENTION: WIDEBAND TUNER ARCHITECTURE

APPLN. TYPE	ENTITY STATUS	ISSUE FEE DUE	PUBLICATION FEE DUE	PREV. PAID ISSUE FEE	TOTAL FEE(S) DUE	DATE DUE
nonprovisional	SMALL	$480	$0	$0	$480	02/26/2015

EXAMINER	ART UNIT	CLASS-SUBCLASS
JACKSON, BLANE J	2649	455-207000

1. Change of correspondence address or indication of "Fee Address" (37 CFR 1.363).
❑ Change of correspondence address (or Change of Correspondence Address form PTO/SB/122) attached.
❑ "Fee Address" indication (or "Fee Address" Indication form PTO/SB/47; Rev 03-02 or more recent) attached. **Use of a Customer Number is required.**

2. For printing on the patent front page, list
(1) The names of up to 3 registered patent attorneys or agents OR, alternatively,
(2) The name of a single firm (having as a member a registered attorney or agent) and the names of up to 2 registered patent attorneys or agents. If no name is listed, no name will be printed.
1 _____
2 _____
3 _____

3. ASSIGNEE NAME AND RESIDENCE DATA TO BE PRINTED ON THE PATENT (print or type)

PLEASE NOTE: Unless an assignee is identified below, no assignee data will appear on the patent. If an assignee is identified below, the document has been filed for recordation as set forth in 37 CFR 3.11. Completion of this form is NOT a substitute for filing an assignment.

(A) NAME OF ASSIGNEE (B) RESIDENCE: (CITY and STATE OR COUNTRY)

Please check the appropriate assignee category or categories (will not be printed on the patent) : ❑ Individual ❑ Corporation or other private group entity ❑ Government

4a. The following fee(s) are submitted:
❑ Issue Fee
❑ Publication Fee (No small entity discount permitted)
❑ Advance Order - # of Copies _____

4b. Payment of Fee(s): **(Please first reapply any previously paid issue fee shown above)**
❑ A check is enclosed.
❑ Payment by credit card. Form PTO-2038 is attached.
❑ The director is hereby authorized to charge the required fee(s), any deficiency, or credits any overpayment, to Deposit Account Number _____ (enclose an extra copy of this form).

5. **Change in Entity Status** (from status indicated above)
❑ Applicant certifying micro entity status. See 37 CFR 1.29 — NOTE: Absent a valid certification of Micro Entity Status (see forms PTO/SB/15A and 15B), issue fee payment in the micro entity amount will not be accepted at the risk of application abandonment.
❑ Applicant asserting small entity status. See 37 CFR 1.27 — NOTE: If the application was previously under micro entity status, checking this box will be taken to be a notification of loss of entitlement to micro entity status.
❑ Applicant changing to regular undiscounted fee status. — NOTE: Checking this box will be taken to be a notification of loss of entitlement to small or micro entity status, as applicable.

NOTE: This form must be signed in accordance with 37 CFR 1.31 and 1.33. See 37 CFR 1.4 for signature requirements and certifications.

Authorized Signature _____ Date _____

Typed or printed name _____ Registration No. _____

UNITED STATES DEPARTMENT OF COMMERCE
United States Patent and Trademark Office
Address: COMMISSIONER FOR PATENTS
P.O. Box 1450
Alexandria, Virginia 22313-1450
www.uspto.gov

APPLICATION NO.	FILING DATE	FIRST NAMED INVENTOR	ATTORNEY DOCKET NO.	CONFIRMATION NO.
13/962,871	08/08/2013	Madhukar Reddy	89194-002720US-883946	3953

20350 7590 11/26/2014
KILPATRICK TOWNSEND & STOCKTON LLP
TWO EMBARCADERO CENTER
EIGHTH FLOOR
SAN FRANCISCO, CA 94111-3834

EXAMINER
JACKSON, BLANE J

ART UNIT	PAPER NUMBER
2649	

DATE MAILED: 11/26/2014

Determination of Patent Term Adjustment under 35 U.S.C. 154 (b)
(Applications filed on or after May 29, 2000)

The Office has discontinued providing a Patent Term Adjustment (PTA) calculation with the Notice of Allowance.

Section 1(h)(2) of the AIA Technical Corrections Act amended 35 U.S.C. 154(b)(3)(B)(i) to eliminate the requirement that the Office provide a patent term adjustment determination with the notice of allowance. See Revisions to Patent Term Adjustment, 78 Fed. Reg. 19416, 19417 (Apr. 1, 2013). Therefore, the Office is no longer providing an initial patent term adjustment determination with the notice of allowance. The Office will continue to provide a patent term adjustment determination with the Issue Notification Letter that is mailed to applicant approximately three weeks prior to the issue date of the patent, and will include the patent term adjustment on the patent. Any request for reconsideration of the patent term adjustment determination (or reinstatement of patent term adjustment) should follow the process outlined in 37 CFR 1.705.

Any questions regarding the Patent Term Extension or Adjustment determination should be directed to the Office of Patent Legal Administration at (571)-272-7702. Questions relating to issue and publication fee payments should be directed to the Customer Service Center of the Office of Patent Publication at 1-(888)-786-0101 or (571)-272-4200.

OMB Clearance and PRA Burden Statement for PTOL-85 Part B

The Paperwork Reduction Act (PRA) of 1995 requires Federal agencies to obtain Office of Management and Budget approval before requesting most types of information from the public. When OMB approves an agency request to collect information from the public, OMB (i) provides a valid OMB Control Number and expiration date for the agency to display on the instrument that will be used to collect the information and (ii) requires the agency to inform the public about the OMB Control Number's legal significance in accordance with 5 CFR 1320.5(b).

The information collected by PTOL-85 Part B is required by 37 CFR 1.311. The information is required to obtain or retain a benefit by the public which is to file (and by the USPTO to process) an application. Confidentiality is governed by 35 U.S.C. 122 and 37 CFR 1.14. This collection is estimated to take 12 minutes to complete, including gathering, preparing, and submitting the completed application form to the USPTO. Time will vary depending upon the individual case. Any comments on the amount of time you require to complete this form and/or suggestions for reducing this burden, should be sent to the Chief Information Officer, U.S. Patent and Trademark Office, U.S. Department of Commerce, P.O. Box 1450, Alexandria, Virginia 22313-1450. DO NOT SEND FEES OR COMPLETED FORMS TO THIS ADDRESS. SEND TO: Commissioner for Patents, P.O. Box 1450, Alexandria, Virginia 22313-1450. Under the Paperwork Reduction Act of 1995, no persons are required to respond to a collection of information unless it displays a valid OMB control number.

Privacy Act Statement

The Privacy Act of 1974 (P.L. 93-579) requires that you be given certain information in connection with your submission of the attached form related to a patent application or patent. Accordingly, pursuant to the requirements of the Act, please be advised that: (1) the general authority for the collection of this information is 35 U.S.C. 2(b)(2); (2) furnishing of the information solicited is voluntary; and (3) the principal purpose for which the information is used by the U.S. Patent and Trademark Office is to process and/or examine your submission related to a patent application or patent. If you do not furnish the requested information, the U.S. Patent and Trademark Office may not be able to process and/or examine your submission, which may result in termination of proceedings or abandonment of the application or expiration of the patent.

The information provided by you in this form will be subject to the following routine uses:

1. The information on this form will be treated confidentially to the extent allowed under the Freedom of Information Act (5 U.S.C. 552) and the Privacy Act (5 U.S.C 552a). Records from this system of records may be disclosed to the Department of Justice to determine whether disclosure of these records is required by the Freedom of Information Act.
2. A record from this system of records may be disclosed, as a routine use, in the course of presenting evidence to a court, magistrate, or administrative tribunal, including disclosures to opposing counsel in the course of settlement negotiations.
3. A record in this system of records may be disclosed, as a routine use, to a Member of Congress submitting a request involving an individual, to whom the record pertains, when the individual has requested assistance from the Member with respect to the subject matter of the record.
4. A record in this system of records may be disclosed, as a routine use, to a contractor of the Agency having need for the information in order to perform a contract. Recipients of information shall be required to comply with the requirements of the Privacy Act of 1974, as amended, pursuant to 5 U.S.C. 552a(m).
5. A record related to an International Application filed under the Patent Cooperation Treaty in this system of records may be disclosed, as a routine use, to the International Bureau of the World Intellectual Property Organization, pursuant to the Patent Cooperation Treaty.
6. A record in this system of records may be disclosed, as a routine use, to another federal agency for purposes of National Security review (35 U.S.C. 181) and for review pursuant to the Atomic Energy Act (42 U.S.C. 218(c)).
7. A record from this system of records may be disclosed, as a routine use, to the Administrator, General Services, or his/her designee, during an inspection of records conducted by GSA as part of that agency's responsibility to recommend improvements in records management practices and programs, under authority of 44 U.S.C. 2904 and 2906. Such disclosure shall be made in accordance with the GSA regulations governing inspection of records for this purpose, and any other relevant (i.e., GSA or Commerce) directive. Such disclosure shall not be used to make determinations about individuals.
8. A record from this system of records may be disclosed, as a routine use, to the public after either publication of the application pursuant to 35 U.S.C. 122(b) or issuance of a patent pursuant to 35 U.S.C. 151. Further, a record may be disclosed, subject to the limitations of 37 CFR 1.14, as a routine use, to the public if the record was filed in an application which became abandoned or in which the proceedings were terminated and which application is referenced by either a published application, an application open to public inspection or an issued patent.
9. A record from this system of records may be disclosed, as a routine use, to a Federal, State, or local law enforcement agency, if the USPTO becomes aware of a violation or potential violation of law or regulation.

Notice of Allowability	Application No. 13/962,871	Applicant(s) REDDY ET AL.	
	Examiner BLANE J. JACKSON	Art Unit 2649	AIA (First Inventor to File) Status No

-- The MAILING DATE of this communication appears on the cover sheet with the correspondence address--

All claims being allowable, PROSECUTION ON THE MERITS IS (OR REMAINS) CLOSED in this application. If not included herewith (or previously mailed), a Notice of Allowance (PTOL-85) or other appropriate communication will be mailed in due course. **THIS NOTICE OF ALLOWABILITY IS NOT A GRANT OF PATENT RIGHTS.** This application is subject to withdrawal from issue at the initiative of the Office or upon petition by the applicant. See 37 CFR 1.313 and MPEP 1308.

1. ☒ This communication is responsive to *the Terminal Disclaimer filed 23 October 2014*.
   ☐ A declaration(s)/affidavit(s) under **37 CFR 1.130(b)** was/were filed on_____.
2. ☐ An election was made by the applicant in response to a restriction requirement set forth during the interview on _____; the restriction requirement and election have been incorporated into this action.
3. ☒ The allowed claim(s) is/are *1-27*. As a result of the allowed claim(s), you may be eligible to benefit from the **Patent Prosecution Highway** program at a participating intellectual property office for the corresponding application. For more information, please see http://www.uspto.gov/patents/init_events/pph/index.jsp or send an inquiry to PPHfeedback@uspto.gov .
4. ☐ Acknowledgment is made of a claim for foreign priority under 35 U.S.C. § 119(a)-(d) or (f).

   Certified copies:

   a) ☐ All b) ☐ Some *c) ☐ None of the:
   1. ☐ Certified copies of the priority documents have been received.
   2. ☐ Certified copies of the priority documents have been received in Application No. _____ .
   3. ☐ Copies of the certified copies of the priority documents have been received in this national stage application from the International Bureau (PCT Rule 17.2(a)).

   * Certified copies not received: _____.

Applicant has THREE MONTHS FROM THE "MAILING DATE" of this communication to file a reply complying with the requirements noted below. Failure to timely comply will result in ABANDONMENT of this application.
THIS THREE-MONTH PERIOD IS NOT EXTENDABLE.

5. ☐ CORRECTED DRAWINGS (as "replacement sheets") must be submitted.
   ☐ including changes required by the attached Examiner's Amendment / Comment or in the Office action of Paper No./Mail Date _____.

   Identifying indicia such as the application number (see 37 CFR 1.84(c)) should be written on the drawings in the front (not the back) of each sheet. Replacement sheet(s) should be labeled as such in the header according to 37 CFR 1.121(d).
6. ☐ DEPOSIT OF and/or INFORMATION about the deposit of BIOLOGICAL MATERIAL must be submitted. Note the attached Examiner's comment regarding REQUIREMENT FOR THE DEPOSIT OF BIOLOGICAL MATERIAL.

Attachment(s)

1. ☐ Notice of References Cited (PTO-892)
2. ☐ Information Disclosure Statements (PTO/SB/08), Paper No./Mail Date _____
3. ☐ Examiner's Comment Regarding Requirement for Deposit of Biological Material
4. ☐ Interview Summary (PTO-413), Paper No./Mail Date _____ .
5. ☐ Examiner's Amendment/Comment
6. ☒ Examiner's Statement of Reasons for Allowance
7. ☐ Other _____.

DETAILED ACTION

The present application is being examined under the pre-AIA first to invent provisions.

Terminal Disclaimer

The terminal disclaimer filed on 27 October 2014 disclaiming the terminal portion of any patent granted on this application which would extend beyond the expiration date of US Patent 8,526,898 has been reviewed and is accepted. The terminal disclaimer has been recorded.

Allowable Subject Matter

Claims 1-27 are allowed. Reference the applicant's Remarks filed 23 October 2014 for reasons for allowance.

Conclusion

Any inquiry concerning this communication or earlier communications from the examiner should be directed to BLANE J. JACKSON whose telephone number is (571)272-7890. The examiner can normally be reached on Monday through Friday, 8:30 AM-5:30 PM, EST.

If attempts to reach the examiner by telephone are unsuccessful, the examiner's supervisor, Edward Urban can be reached on (571) 272-7899. The fax phone number for the organization where this application or proceeding is assigned is 571-273-8300.

Information regarding the status of an application may be obtained from the Patent Application Information Retrieval (PAIR) system. Status information for published applications may be obtained from either Private PAIR or Public PAIR. Status information for unpublished applications is available through Private PAIR only. For more information about the PAIR system, see http://pair-direct.uspto.gov. Should you have questions on access to the Private PAIR system, contact the Electronic Business Center (EBC) at 866-217-9197 (toll-free). If you would like assistance from a USPTO Customer Service Representative or access to the automated information system, call 800-786-9199 (IN USA OR CANADA) or 571-272-1000.

/BLANE J JACKSON/
Primary Examiner, Art Unit 2649

EAST Search History

EAST Search History (Prior Art)

Ref #	Hits	Search Query	DBs	Default Operator	Plurals	Time Stamp
L1	4	"8526898".pn.	US-PGPUB; USPAT; USOCR; FPRS; EPO; JPO; DERWENT; IBM_TDB	OR	ON	2014/06/20 10:48
L2	32	Reddy-Madhukar.in.	US-PGPUB; USPAT; USOCR; FPRS; EPO; JPO; DERWENT; IBM_TDB	OR	ON	2014/06/20 11:00

6/20/2014 11:10:53 AM

Issue Classification	Application/Control No.	Applicant(s)/Patent Under Reexamination
	13962871	REDDY ET AL.
	Examiner	**Art Unit**
	BLANE J JACKSON	2649

CPC

Symbol					Type	Version
H04N		5	/	50	F	2013-01-01
H04B		1	/	0014	I	2013-01-01
H04N		21	/	4263	I	2013-01-01
H04N		21	/	4383	I	2013-01-01
H04N		21	/	454	I	2013-01-01
			/			
			/			
			/			
			/			
			/			
			/			
			/			
			/			
			/			
			/			

CPC Combination Sets

Symbol					Type	Set	Ranking	Version
			/					
			/					

NONE (Assistant Examiner)	(Date)	**Total Claims Allowed:** 21	
/BLANE J JACKSON/ Primary Examiner.Art Unit 2649 (Primary Examiner)	11/19/14 (Date)	O.G. Print Claim(s) 1	O.G. Print Figure 4

Issue Classification	Application/Control No.	Applicant(s)/Patent Under Reexamination
	13962871	REDDY ET AL.
	Examiner	**Art Unit**
	BLANE J JACKSON	2649

US ORIGINAL CLASSIFICATION		INTERNATIONAL CLASSIFICATION									
CLASS	SUBCLASS	CLAIMED					NON-CLAIMED				
455	207	H	0	4	B	1 / 0071					
CROSS REFERENCE(S)		H	0	4	B	1 / 16 (2006.01.01)					
CLASS	SUBCLASS (ONE SUBCLASS PER BLOCK)										
455	214										

NONE (Assistant Examiner)	(Date)	**Total Claims Allowed:** 21	
/BLANE J JACKSON/ Primary Examiner.Art Unit 2649 (Primary Examiner)	11/19/14 (Date)	O.G. Print Claim(s) 1	O.G. Print Figure 4

Issue Classification	Application/Control No.	Applicant(s)/Patent Under Reexamination
	13962871	REDDY ET AL.
	Examiner	**Art Unit**
	BLANE J JACKSON	2649

☐ Claims renumbered in the same order as presented by applicant ☐ CPA ☐ T.D. ☐ R.1.47

Final	Original	Final	Original	Final	Original	Final	Original	Final	Original	Final	Original	Final	Original	Final	Original
1	1	17	17												
2	2	18	18												
3	3	19	19												
4	4	20	20												
5	5	21	21												
6	6														
7	7														
8	8														
9	9														
10	10														
11	11														
12	12														
13	13														
14	14														
15	15														
16	16														

NONE (Assistant Examiner)	(Date)	**Total Claims Allowed:** 21	
/BLANE J JACKSON/ Primary Examiner.Art Unit 2649 (Primary Examiner)	11/19/14 (Date)	O.G. Print Claim(s) 1	O.G. Print Figure 4

Search Notes	Application/Control No.	Applicant(s)/Patent Under Reexamination
	13962871	REDDY ET AL.
	Examiner	**Art Unit**
	BLANE J JACKSON	2649

CPC- SEARCHED

Symbol	Date	Examiner

CPC COMBINATION SETS - SEARCHED

Symbol	Date	Examiner
H04B 1/16, 1/005, 1/0071	06/23/14	BJJ

US CLASSIFICATION SEARCHED

Class	Subclass	Date	Examiner
455	132, 140, 179.1, 180.1, 188.1, 189.1,207, 214,313, 315, 323, 324,324, 325, 334	06/23/14	BJJ

SEARCH NOTES

Search Notes	Date	Examiner
Search of East database; review of parent IDS and prior art to DP	06/23/14	BJJ
Review of TD and parent to issue	11/19/14	BJJ

INTERFERENCE SEARCH

US Class/ CPC Symbol	US Subclass / CPC Group	Date	Examiner
	no interference listed class/ subclass or symbol/ group	11/19/14	BJJ

EAST Search History

EAST Search History (Prior Art)

Ref #	Hits	Search Query	DBs	Default Operator	Plurals	Time Stamp
L1	2	(455/179.1-214.ccls. or H04B 1/16 or h04b 1/005) and contiguous adj6 channel same complex adj3 mixer	US-PGPUB; USPAT; USOCR; FPRS; EPO; JPO; DERWENT; IBM_TDB	OR	ON	2014/11/19 13:16
L2	14	(455/179.1-214.ccls. or H04B 1/16 or h04b 1/005) and (contiguous or adjacent) adj6 channel same ((complex or plurality) adj3 mixer)	US-PGPUB; USPAT; USOCR; FPRS; EPO; JPO; DERWENT; IBM_TDB	OR	ON	2014/11/19 13:17
L3	34	(455/179.1-214.ccls. or H04B 1/16 or h04b 1/005) and (contiguous or adjacent or position$4) adj6 channel with baseband and complex adj4 mixer	US-PGPUB; USPAT; USOCR; FPRS; EPO; JPO; DERWENT; IBM_TDB	OR	ON	2014/11/19 13:22
L4	34	Reddy-Madhukar.in.	US-PGPUB; USPAT; USOCR; FPRS; EPO; JPO; DERWENT; IBM_TDB	OR	ON	2014/11/19 13:24

11/19/2014 1:27:37 PM

To: ipefiling@kilpatricktownsend.com,jlhice@kilpatrick.foundationip.com,
From: PAIR_eOfficeAction@uspto.gov
Cc: PAIR_eOfficeAction@uspto.gov
Subject: Private PAIR Correspondence Notification for Customer Number 20350

Nov 26, 2014 05:28:33 AM

Dear PAIR Customer:

KILPATRICK TOWNSEND & STOCKTON LLP
TWO EMBARCADERO CENTER
EIGHTH FLOOR
SAN FRANCISCO, CA 94111-3834
UNITED STATES

The following USPTO patent application(s) associated with your Customer Number, 20350 , have new outgoing correspondence. This correspondence is now available for viewing in Private PAIR.

The official date of notification of the outgoing correspondence will be indicated on the form PTOL-90 accompanying the correspondence.

Disclaimer:
The list of documents shown below is provided as a courtesy and is not part of the official file wrapper. The content of the images shown in PAIR is the official record.

Application	Document	Mailroom Date	Attorney Docket No.
13962871	NOA	11/26/2014	89194-002720US-883946

To view your correspondence online or update your email addresses, please visit us anytime at https://sportal.uspto.gov/secure/myportal/privatepair.

If you have any questions, please email the Electronic Business Center (EBC) at EBC@uspto.gov with 'e-Office Action' on the subject line or call 1-866-217-9197 during the following hours:

Monday - Friday 6:00 a.m. to 12:00 a.m.

Thank you for prompt attention to this notice,

UNITED STATES PATENT AND TRADEMARK OFFICE

PATENT APPLICATION INFORMATION RETRIEVAL SYSTEM

PTO/SB/30 (07-09)
Approved for use through 07/31/2012. OMB 0651-0031
U.S. Patent and Trademark Office: U.S. DEPARTMENT OF COMMERCE
Under the Paperwork Reduction Act of 1995, no persons are required to respond to a collection of information unless it displays a valid OMB control number.

Request For Continued Examination (RCE) Transmittal

Address to:
Mail Stop RCE
Commissioner for Patents
P.O. Box 1450
Alexandria, VA 22313-1450

Application Number	13/962,871
Filing Date	August 8, 2013
First Named Inventor	Madhukar Reddy
Art Unit	2649
Examiner Name	Blane J. Jackson
Attorney Docket Number	89194-002720US-883946

This is a Request for Continued Examination (RCE) under 37 CFR 1.114 of the above-identified application.
Request for Continued Examination (RCE) practice under 37 CFR 1.114 does not apply to any utility or plant application filed prior to June 8, 1995, or to any design application. See Instruction Sheet for RCEs (not to be submitted to the USPTO) on page 2.

1. Submission required under 37 C.F.R. 1.114 Note: If the RCE is proper, any previously filed unentered amendments and amendments enclosed with the RCE will be entered in the order in which they were filed unless applicant instructs otherwise. If applicant does not wish to have any previously filed unentered amendment(s) entered, applicant must request non-entry of such amendment(s).

a. ☐ Previously submitted. If a final Office action is outstanding, any amendments filed after the final Office action may be considered as a submission even if this box is not checked.

i. ☐ Consider the arguments in the Appeal Brief or Reply Brief previously filed on _____
ii. ☐ Other _____

b. . ☒ Enclosed

i. ☐ Amendment/Reply
ii ☐ Affidavit(s)/Declaration(s)
iii. ☒ Information Disclosure Statement (IDS)
iv. ☐ Other _____

2. Miscellaneous

a. ☐ Suspension of action on the above-identified application is requested under 37 C.F.R. 1.103(c) for a period of _months. (Period of suspension shall not exceed 3 months; Fee under 37 C.F.R. 1.17(i) required)
b. ☐ Other _____

3. Fees The RCE fee under 37 C.F.R. 1.17(e) is required by 37 C.F.R. 1.114 when the RCE is filed.

a. ☒ The Director is hereby authorized to charge the following fees, any underpayment of fees, or credit any overpayments, to Deposit Account No.20-1430.

i. ☒ RCE fee required under 37 C.F.R. 1.17(e)
ii. ☐ Extension of time fee (37 C.F.R. 1.136 and 1.17)
iii. ☐ Other _____

b. ☐ Check in the amount of $ enclosed
c. ☒ Payment by credit card (Form PTO-2038 enclosed)

WARNING: Information on this form may become public. Credit card information should not be included on this form. Provide credit card information and authorization on PTO-2038.

SIGNATURE OF APPLICANT, ATTORNEY OR AGENT REQUIRED

Signature	/Ardeshir Tabibi/	Date	February 26, 2015
Name (Print /Type)	Ardeshir Tabibi	Registration No.	48,750

CERTIFICATE OF MAILING OR TRANSMISSION

I hereby certify that this correspondence is being deposited with the United States Postal Service with sufficient postage as first class mail in an envelope addressed to: Mail Stop RCE, Commissioner for Patents, P. O. Box 1450, Alexandria, VA 22313-1450 or facsimile transmitted to the U.S. Patent and Trademark Office on the date shown below.

Signature			
Name (Print /Type)		Date	

This collection of information is required by 37 CFR 1.114. The information is required to obtain or retain a benefit by the public which is to file (and by the USPTO to process) an application. Confidentiality is governed by 35 U.S.C. 122 and 37 CFR 1.11 and 1.14. This collection is estimated to take 12 minutes to complete, including gathering, preparing, and submitting the completed application form to the USPTO. Time will vary depending upon the individual case. Any comments on the amount of time you require to complete this form and/or suggestions for reducing this burden, should be sent to the Chief Information Officer, U.S. Patent and Trademark Office, U.S. Department of Commerce, P.O. Box 1450, Alexandria, VA 22313-1450. DO NOT SEND FEES OR COMPLETED FORMS TO THIS ADDRESS. **SEND TO: Mail Stop RCE, Commissioner for Patents, P.O. Box 1450, Alexandria, VA 22313-1450.**

If you need assistance in completing the form, call 1-800-PTO-9199 and select option 2.

PATENT
Attorney Docket No.: 89194-002720US-883946

IN THE UNITED STATES PATENT AND TRADEMARK OFFICE

In re Application of:	Confirmation No.: 3953
Madhukar Reddy et al.	Examiner: Blane J. Jackson
Application No.: 13/962,871	Technology Center/Art Unit: 2649
Filed: August 8, 2013	
For: WIDEBAND TUNER ARCHITECTURE	INFORMATION DISCLOSURE STATEMENT
Customer No.: 20350	

Commissioner for Patents
P.O. Box 1450
Alexandria, VA 22313-1450

Commissioner:

The references cited on attached form PTO/SB/08A are being called to the attention of the Examiner. Copies of the references in compliance with the requirements of 37 CFR §1.98(a)(2) are enclosed. In accordance with 37 CFR §1.98(d), copies of the references can be found in 12/762,900 filed April 19, 2010. Related Patent Applications are cited in this Information Disclosure Statement. Copies of any Office Actions in such Patent Applications are available via the USPTO's PAIR or electronic file wrapper system and are believed to be readily accessible to the Examiner. Thus, although applicant may submit copies of some such Office Actions, applicant does not represent that copies of all, or the most significant, offices actions are being supplied. If the Examiner desires copies of all such Office Actions, the Examiner should contact the undersigned.

It is respectfully requested that the cited references be expressly considered during the prosecution of this application, and the references be made of record therein and appear among the "references cited" on any patent to issue therefrom.

As provided for by 37 CFR § 1.97(g) and (h), no inference should be made that the information and references cited are prior art merely because they are in this statement and no representation is being made that a search has been conducted or that this statement encompasses all the possible relevant information.

Applicant believes that no fee is required for submission of this statement. However, if any additional fees are due for the submission of this Information Disclosure Statement, please deduct those fees from Deposit Account No. 20-1430.

This IDS is being filed along with a Request for Continued Examination.

Respectfully submitted,

/Ardeshir Tabibi/

Ardeshir Tabibi
Registration No. 48,750

KILPATRICK TOWNSEND & STOCKTON LLP
Two Embarcadero Center, Eighth Floor
San Francisco, California 94111-3834
Tel: 415-576-0200
Fax: 415-576-0300
Attachments

PTO/SB/08a (01-10)
Approved for use through 07/31/2012. OMB 0651-0031
U.S. Patent and Trademark Office; U.S. DEPARTMENT OF COMMERCE

Under the Paperwork Reduction Act of 1995, no persons are required to respond to a collection of information unless it contains a valid OMB control number.

INFORMATION DISCLOSURE STATEMENT BY APPLICANT (Not for submission under 37 CFR 1.99)		
	Application Number	13/962,871
	Filing Date	August 8, 2013
	First Named Inventor	Madhukar Reddy
	Art Unit	2649
	Examiner Name	Blane J. Jackson
	Attorney Docket Number	89194-002720US-883946

U.S. PATENTS

Examiner Initial*	Cite No	Patent Number	Kind Code[1]	Issue Date	Name of Patentee or Applicant of cited Document	Pages, Columns, Lines, Where Relevant Passages or Relevant Figures Appear
	1.	US8,892,225	B2	11-18-2014	Walsh et al.	

U.S. PATENT APPLICATION PUBLICATIONS

Examiner Initial*	Cite No	Publication Number	Kind Code[1]	Publication Date	Name of Patentee or Applicant of cited Document	Pages, Columns, Lines, Where Relevant Passages or Relevant Figures Appear
	1.	US2004/0110522	A1	06-10-2004	Reddy et al.	
	2.	US2005/0286562	A1	12-29-2005	Nakao et al.	
	3.	US2011/0105068	A1	05-05-2011	Reddy et al.	

FOREIGN PATENT DOCUMENTS

Examiner Initial*	Cite No	Foreign Document Number[3]	Country Code[2]	Kind Code[4]	Publication Date	Name of Patentee or Applicant of cited Document	Pages, Columns, Lines where Relevant Passages or Relevant Figures Appear	T[5]

NON-PATENT LITERATURE DOCUMENTS

Examiner Initials*	Cite No	Include name of the author (in CAPITAL LETTERS), title of the article (when appropriate), title of the item (book, magazine, journal, serial, symposium, catalog, etc.), date, page(s), volume-issue number(s), publisher, city and/or country where published.	T[5]
	1.	International Search Report and Written Opinion for International Patent Application No. PCT/2010/031631, mailed June 17, 2010, 8 pages.	
	2.	International Search Report and Written Opinion for International Patent Application No. PCT/2010/031627, mailed June 18, 2010, 7 pages.	
	3.	International Preliminary Report on Patentability for International Patent Application No. PCT/2010/031631, mailed October 27, 2011, 7 pages.	

PTO/SB/08a (01-10)
Approved for use through 07/31/2012. OMB 0651-0031
U.S. Patent and Trademark Office; U.S. DEPARTMENT OF COMMERCE

Under the Paperwork Reduction Act of 1995, no persons are required to respond to a collection of information unless it contains a valid OMB control number.

INFORMATION DISCLOSURE STATEMENT BY APPLICANT (Not for submission under 37 CFR 1.99)		
	Application Number	13/962,871
	Filing Date	August 8, 2013
	First Named Inventor	Madhukar Reddy
	Art Unit	2649
	Examiner Name	Blane J. Jackson
	Attorney Docket Number	89194-002720US-883946

	4.	International Preliminary Report on Patentability for International Patent Application No. PCT/2010/031627, mailed October 27, 2011, 6 pages.	
	5.	Non-Final Office Action for U.S. Patent Application No. 12/762,900, mailed August 30, 2012, 9 pages.	
	6.	Notice of Allowance for U.S. Patent Application No. 12/762,900, mailed May 6, 2013, 9 pages.	
	7.	Non-Final Office for U.S. Patent Application No. 12/762,950, mailed February 11, 2013, 35 pages.	
	8.	Final Office Action for U.S. Patent Application No. 12/762,950, mailed September 5, 2013, 37 pages.	
	9.	Non-Final Office for U.S. Patent Application No. 12/762,950, mailed March 21, 2014, 19 pages.	
	10.	Notice of Allowance for U.S. Patent Application No. 12/762,950, mailed October 7, 2014, 7 pages.	

EXAMINER SIGNATURE

PTO/SB/08a (01-10)
Approved for use through 07/31/2012. OMB 0651-0031
U.S. Patent and Trademark Office; U.S. DEPARTMENT OF COMMERCE

Under the Paperwork Reduction Act of 1995, no persons are required to respond to a collection of information unless it contains a valid OMB control number.

INFORMATION DISCLOSURE STATEMENT BY APPLICANT (Not for submission under 37 CFR 1.99)		
	Application Number	13/962,871
	Filing Date	August 8, 2013
	First Named Inventor	Madhukar Reddy
	Art Unit	2649
	Examiner Name	Blane J. Jackson
	Attorney Docket Number	89194-002720US-883946

Examiner Signature		Date Considered	

*EXAMINER: Initial if reference considered, whether or not citation is in conformance with MPEP 609. Draw line through a citation if not in conformance and not considered. Include copy of this form with next communication to applicant.

[1] See Kind Codes of USPTO Patent Documents at www.USPTO.GOV or MPEP 901.04. [2] Enter office that issued the document, by the two-letter code (WIPO Standard ST.3). [3] For Japanese patent documents, the indication of the year of the reign of the Emperor must precede the serial number of the patent document.
[4] Kind of document by the appropriate symbols as indicated on the document under WIPO Standard ST.16 if possible. [5] Applicant is to place a check mark here if English language translation is attached.

CERTIFICATION STATEMENT

Please see 37 CFR 1.97 and 1.98 to make the appropriate selection(s):

☐ That each item of information contained in the information disclosure statement was first cited in any communication from a foreign patent office in a counterpart foreign application not more than three months prior to the filing of the information disclosure statement. See 37 CFR 1.97(e) (1).

OR

☐ That no item of information contained in the information disclosure statement was cited in a communication from a foreign patent office in a counterpart foreign application, and, to the knowledge of the person signing the certification after making reasonable inquiry, no item of information contained in the information disclosure statement was known to any individual designated in 37 CFR 1.56(c) more than three months prior to the filing of the information disclosure statement. See 37 CFR 1.97(e) (2).

☐ See attached certification statement.

☐ Fee set forth in 37 CFR 1.17 (p) has been submitted herewith.

☒ A certification statement is not submitted herewith.

SIGNATURE

A signature of the applicant or representative is required in accordance with CFR 1.33, 10.18. Please see CFR 1.4(d) for the form of the signature.

Signature	/Ardeshir Tabibi/	Date (YYYY-MM-DD)	February 25, 2015
Name/Print	Ardeshir Tabibi	Registration Number	48,750

This collection of information is required by 37 CFR 1.97 and 1.98. The information is required to obtain or retain a benefit by the public which is to file (and by the USPTO to process) an application. Confidentiality is governed by 35 U.S.C. 122 and 37 CFR 1.14. This collection is estimated to take 1 hour to complete, including gathering, preparing and submitting the completed

PTO/SB/08a (01-10)
Approved for use through 07/31/2012. OMB 0651-0031
U.S. Patent and Trademark Office; U.S. DEPARTMENT OF COMMERCE

Under the Paperwork Reduction Act of 1995, no persons are required to respond to a collection of information unless it contains a valid OMB control number.

INFORMATION DISCLOSURE STATEMENT BY APPLICANT (Not for submission under 37 CFR 1.99)		
	Application Number	13/962,871
	Filing Date	August 8, 2013
	First Named Inventor	Madhukar Reddy
	Art Unit	2649
	Examiner Name	Blane J. Jackson
	Attorney Docket Number	89194-002720US-883946

application form to the USPTO. Time will vary depending upon the individual case. Any comments on the amount of time you require to complete this form and/or suggestions for reducing this burden, should be sent to the Chief Information Officer, U.S. Patent and Trademark Office, U.S. Department of Commerce, P.O. Box 1450, Alexandria, VA 22313-1450. DO NOT SEND FEES OR COMPLETED FORMS TO THIS ADDRESS. **SEND TO: Commissioner for Patents, P.O. Box 1450, Alexandria, VA 22313-1450.**

Electronic Patent Application Fee Transmittal

Application Number:	13962871
Filing Date:	08-Aug-2013
Title of Invention:	WIDEBAND TUNER ARCHITECTURE
First Named Inventor/Applicant Name:	Madhukar Reddy
Filer:	Ardeshir Tabibi/Yvonne Mock
Attorney Docket Number:	89194-002720US-883946

Filed as Small Entity

Filing Fees for **Utility under 35 USC 111(a)**

Description	Fee Code	Quantity	Amount	Sub-Total in USD($)
Basic Filing:				
Pages:				
Claims:				
Miscellaneous-Filing:				
Petition:				
Patent-Appeals-and-Interference:				
Post-Allowance-and-Post-Issuance:				
Extension-of-Time:				

Description	Fee Code	Quantity	Amount	Sub-Total in USD($)
Miscellaneous:				
Request for Continued Examination	2801	1	600	600
		Total in USD ($)		**600**

Electronic Acknowledgement Receipt

EFS ID:	21612008
Application Number:	13962871
International Application Number:	
Confirmation Number:	3953
Title of Invention:	WIDEBAND TUNER ARCHITECTURE
First Named Inventor/Applicant Name:	Madhukar Reddy
Customer Number:	20350
Filer:	Ardeshir Tabibi/Yvonne Mock
Filer Authorized By:	Ardeshir Tabibi
Attorney Docket Number:	89194-002720US-883946
Receipt Date:	26-FEB-2015
Filing Date:	08-AUG-2013
Time Stamp:	16:15:21
Application Type:	Utility under 35 USC 111(a)

Payment information:

Submitted with Payment	yes
Payment Type	Credit Card
Payment was successfully received in RAM	$600
RAM confirmation Number	2648
Deposit Account	
Authorized User	
The Director of the USPTO is hereby authorized to charge indicated fees and credit any overpayment as follows:	

File Listing:

Document Number	Document Description	File Name	File Size(Bytes)/ Message Digest	Multi Part /.zip	Pages (if appl.)
1	Request for Continued Examination (RCE)	RCE_89194-00002720US-883946.pdf	129329 9521c2febd9466c38db90039de1f54d8ccc449d0	no	1
Warnings:					
This is not a USPTO supplied RCE SB30 form.					
Information:					
2		IDS_89194-002720US-883946.pdf	153046 3def340a43281de6db3d2d555022f0d003124341	yes	6
	Multipart Description/PDF files in .zip description				
	Document Description		**Start**	**End**	
	Transmittal Letter		1	2	
	Information Disclosure Statement (IDS) Form (SB08)		3	6	
Warnings:					
Information:					
3	Fee Worksheet (SB06)	fee-info.pdf	30668 570bd7fecb8783369a75e610da56f7990b20dd2d	no	2
Warnings:					
Information:					
		Total Files Size (in bytes):	313043		

This Acknowledgement Receipt evidences receipt on the noted date by the USPTO of the indicated documents, characterized by the applicant, and including page counts, where applicable. It serves as evidence of receipt similar to a Post Card, as described in MPEP 503.

New Applications Under 35 U.S.C. 111
If a new application is being filed and the application includes the necessary components for a filing date (see 37 CFR 1.53(b)-(d) and MPEP 506), a Filing Receipt (37 CFR 1.54) will be issued in due course and the date shown on this Acknowledgement Receipt will establish the filing date of the application.

National Stage of an International Application under 35 U.S.C. 371
If a timely submission to enter the national stage of an international application is compliant with the conditions of 35 U.S.C. 371 and other applicable requirements a Form PCT/DO/EO/903 indicating acceptance of the application as a national stage submission under 35 U.S.C. 371 will be issued in addition to the Filing Receipt, in due course.

New International Application Filed with the USPTO as a Receiving Office
If a new international application is being filed and the international application includes the necessary components for an international filing date (see PCT Article 11 and MPEP 1810), a Notification of the International Application Number and of the International Filing Date (Form PCT/RO/105) will be issued in due course, subject to prescriptions concerning national security, and the date shown on this Acknowledgement Receipt will establish the international filing date of the application.

PATENT
Attorney Docket No.: 89194-002720US-883946

IN THE UNITED STATES PATENT AND TRADEMARK OFFICE

In re Application of:	Confirmation No.: 3953
Madhukar Reddy et al.	Examiner: Blane J. Jackson
Application No.: 13/962,871	Technology Center/Art Unit: 2649
Filed: August 8, 2013	
For: WIDEBAND TUNER ARCHITECTURE	INFORMATION DISCLOSURE STATEMENT
Customer No.: 20350	

Commissioner for Patents
P.O. Box 1450
Alexandria, VA 22313-1450

Commissioner:

The references cited on attached form PTO/SB/08A are being called to the attention of the Examiner. Copies of the references in compliance with the requirements of 37 CFR §1.98(a)(2) are enclosed. In accordance with 37 CFR §1.98(d), copies of the references can be found in 12/762,900 filed April 19, 2010. Related Patent Applications are cited in this Information Disclosure Statement. Copies of any Office Actions in such Patent Applications are available via the USPTO's PAIR or electronic file wrapper system and are believed to be readily accessible to the Examiner. Thus, although applicant may submit copies of some such Office Actions, applicant does not represent that copies of all, or the most significant, offices actions are being supplied. If the Examiner desires copies of all such Office Actions, the Examiner should contact the undersigned.

It is respectfully requested that the cited references be expressly considered during the prosecution of this application, and the references be made of record therein and appear among the "references cited" on any patent to issue therefrom.

As provided for by 37 CFR § 1.97(g) and (h), no inference should be made that the information and references cited are prior art merely because they are in this statement and no representation is being made that a search has been conducted or that this statement encompasses all the possible relevant information.

Applicant believes that no fee is required for submission of this statement. However, if any additional fees are due for the submission of this Information Disclosure Statement, please deduct those fees from Deposit Account No. 20-1430.

This IDS is being filed along with a Request for Continued Examination.

Respectfully submitted,

/Ardeshir Tabibi/

Ardeshir Tabibi
Registration No. 48,750

KILPATRICK TOWNSEND & STOCKTON LLP
Two Embarcadero Center, Eighth Floor
San Francisco, California 94111-3834
Tel: 415-576-0200
Fax: 415-576-0300
Attachments

PTO/SB/08a (01-10)
Approved for use through 07/31/2012. OMB 0651-0031
U.S. Patent and Trademark Office; U.S. DEPARTMENT OF COMMERCE

Under the Paperwork Reduction Act of 1995, no persons are required to respond to a collection of information unless it contains a valid OMB control number.

INFORMATION DISCLOSURE STATEMENT BY APPLICANT (Not for submission under 37 CFR 1.99)		
	Application Number	13/962,871
	Filing Date	August 8, 2013
	First Named Inventor	Madhukar Reddy
	Art Unit	2649
	Examiner Name	Blane J. Jackson
	Attorney Docket Number	89194-002720US-883946

U.S. PATENTS

Examiner Initial*	Cite No	Patent Number	Kind Code[1]	Issue Date	Name of Patentee or Applicant of cited Document	Pages, Columns, Lines, Where Relevant Passages or Relevant Figures Appear
	1.	US8,892,225	B2	11-18-2014	Walsh et al.	

U.S. PATENT APPLICATION PUBLICATIONS

Examiner Initial*	Cite No	Publication Number	Kind Code[1]	Publication Date	Name of Patentee or Applicant of cited Document	Pages, Columns, Lines, Where Relevant Passages or Relevant Figures Appear
	1.	US2004/0110522	A1	06-10-2004	Reddy et al.	
	2.	US2005/0286562	A1	12-29-2005	Nakao et al.	
	3.	US2011/0105068	A1	05-05-2011	Reddy et al.	

FOREIGN PATENT DOCUMENTS

Examiner Initial*	Cite No	Foreign Document Number[3]	Country Code[2]	Kind Code[4]	Publication Date	Name of Patentee or Applicant of cited Document	Pages, Columns, Lines where Relevant Passages or Relevant Figures Appear	T[5]

NON-PATENT LITERATURE DOCUMENTS

Examiner Initials*	Cite No	Include name of the author (in CAPITAL LETTERS), title of the article (when appropriate), title of the item (book, magazine, journal, serial, symposium, catalog, etc.), date, page(s), volume-issue number(s), publisher, city and/or country where published.	T[5]
	1.	International Search Report and Written Opinion for International Patent Application No. PCT/2010/031631, mailed June 17, 2010, 8 pages.	
	2.	International Search Report and Written Opinion for International Patent Application No. PCT/2010/031627, mailed June 18, 2010, 7 pages.	
	3.	International Preliminary Report on Patentability for International Patent Application No. PCT/2010/031631, mailed October 27, 2011, 7 pages.	

PTO/SB/08a (01-10)
Approved for use through 07/31/2012. OMB 0651-0031
U.S. Patent and Trademark Office; U.S. DEPARTMENT OF COMMERCE

Under the Paperwork Reduction Act of 1995, no persons are required to respond to a collection of information unless it contains a valid OMB control number.

INFORMATION DISCLOSURE STATEMENT BY APPLICANT (Not for submission under 37 CFR 1.99)		
	Application Number	13/962,871
	Filing Date	August 8, 2013
	First Named Inventor	Madhukar Reddy
	Art Unit	2649
	Examiner Name	Blane J. Jackson
	Attorney Docket Number	89194-002720US-883946

	4.	International Preliminary Report on Patentability for International Patent Application No. PCT/2010/031627, mailed October 27, 2011, 6 pages.	
	5.	Non-Final Office Action for U.S. Patent Application No. 12/762,900, mailed August 30, 2012, 9 pages.	
	6.	Notice of Allowance for U.S. Patent Application No. 12/762,900, mailed May 6, 2013, 9 pages.	
	7.	Non-Final Office for U.S. Patent Application No. 12/762,950, mailed February 11, 2013, 35 pages.	
	8.	Final Office Action for U.S. Patent Application No. 12/762,950, mailed September 5, 2013, 37 pages.	
	9.	Non-Final Office for U.S. Patent Application No. 12/762,950, mailed March 21, 2014, 19 pages.	
	10.	Notice of Allowance for U.S. Patent Application No. 12/762,950, mailed October 7, 2014, 7 pages.	

EXAMINER SIGNATURE

PTO/SB/08a (01-10)
Approved for use through 07/31/2012. OMB 0651-0031
U.S. Patent and Trademark Office; U.S. DEPARTMENT OF COMMERCE

Under the Paperwork Reduction Act of 1995, no persons are required to respond to a collection of information unless it contains a valid OMB control number.

INFORMATION DISCLOSURE STATEMENT BY APPLICANT (Not for submission under 37 CFR 1.99)		
	Application Number	13/962,871
	Filing Date	August 8, 2013
	First Named Inventor	Madhukar Reddy
	Art Unit	2649
	Examiner Name	Blane J. Jackson
	Attorney Docket Number	89194-002720US-883946

Examiner Signature		Date Considered	

*EXAMINER: Initial if reference considered, whether or not citation is in conformance with MPEP 609. Draw line through a citation if not in conformance and not considered. Include copy of this form with next communication to applicant.

[1] See Kind Codes of USPTO Patent Documents at www.USPTO.GOV or MPEP 901.04. [2] Enter office that issued the document, by the two-letter code (WIPO Standard ST.3). [3] For Japanese patent documents, the indication of the year of the reign of the Emperor must precede the serial number of the patent document.
[4] Kind of document by the appropriate symbols as indicated on the document under WIPO Standard ST.16 if possible. [5] Applicant is to place a check mark here if English language translation is attached.

CERTIFICATION STATEMENT

Please see 37 CFR 1.97 and 1.98 to make the appropriate selection(s):

☐ That each item of information contained in the information disclosure statement was first cited in any communication from a foreign patent office in a counterpart foreign application not more than three months prior to the filing of the information disclosure statement. See 37 CFR 1.97(e) (1).

OR

☐ That no item of information contained in the information disclosure statement was cited in a communication from a foreign patent office in a counterpart foreign application, and, to the knowledge of the person signing the certification after making reasonable inquiry, no item of information contained in the information disclosure statement was known to any individual designated in 37 CFR 1.56(c) more than three months prior to the filing of the information disclosure statement. See 37 CFR 1.97(e) (2).

☐ See attached certification statement.

☐ Fee set forth in 37 CFR 1.17 (p) has been submitted herewith.

☒ A certification statement is not submitted herewith.

SIGNATURE

A signature of the applicant or representative is required in accordance with CFR 1.33, 10.18. Please see CFR 1.4(d) for the form of the signature.

Signature	/Ardeshir Tabibi/	Date (YYYY-MM-DD)	February 25, 2015
Name/Print	Ardeshir Tabibi	Registration Number	48,750

This collection of information is required by 37 CFR 1.97 and 1.98. The information is required to obtain or retain a benefit by the public which is to file (and by the USPTO to process) an application. Confidentiality is governed by 35 U.S.C. 122 and 37 CFR 1.14. This collection is estimated to take 1 hour to complete, including gathering, preparing and submitting the completed

PTO/SB/08a (01-10)
Approved for use through 07/31/2012. OMB 0651-0031
U.S. Patent and Trademark Office; U.S. DEPARTMENT OF COMMERCE

Under the Paperwork Reduction Act of 1995, no persons are required to respond to a collection of information unless it contains a valid OMB control number.

INFORMATION DISCLOSURE STATEMENT BY APPLICANT (Not for submission under 37 CFR 1.99)		
	Application Number	13/962,871
	Filing Date	August 8, 2013
	First Named Inventor	Madhukar Reddy
	Art Unit	2649
	Examiner Name	Blane J. Jackson
	Attorney Docket Number	89194-002720US-883946

application form to the USPTO. Time will vary depending upon the individual case. Any comments on the amount of time you require to complete this form and/or suggestions for reducing this burden, should be sent to the Chief Information Officer, U.S. Patent and Trademark Office, U.S. Department of Commerce, P.O. Box 1450, Alexandria, VA 22313-1450. DO NOT SEND FEES OR COMPLETED FORMS TO THIS ADDRESS. **SEND TO: Commissioner for Patents, P.O. Box 1450, Alexandria, VA 22313-1450.**

PATENT COOPERATION TREATY

From the INTERNATIONAL BUREAU

PCT

NOTIFICATION CONCERNING TRANSMITTAL OF COPY OF INTERNATIONAL PRELIMINARY REPORT ON PATENTABILITY (CHAPTER I OF THE PATENT COOPERATION TREATY)
(PCT Rule 44bis.1(c))

To:

TABIBI, Ardeshir
Townsend And Townsend And Crew LLP
Two Embarcadero Center
8th Floor
San Francisco, California 94111
ETATS-UNIS D'AMERIQUE

Date of mailing *(day/month/year)* 27 October 2011 (27.10.2011)	
Applicant's or agent's file reference 22287-27-1PC	**IMPORTANT NOTICE**

International application No.	International filing date *(day/month/year)*	Priority date *(day/month/year)*
PCT/US2010/031627	19 April 2010 (19.04.2010)	17 April 2009 (17.04.2009)

Applicant
MAXLINEAR, INC. et al

The International Bureau transmits herewith a copy of the international preliminary report on patentability (Chapter I of the Patent Cooperation Treaty)

The International Bureau of WIPO 34, chemin des Colombettes 1211 Geneva 20, Switzerland Facsimile No. +41 22 338 82 70	Authorized officer Yolaine Cussac e-mail: pt05.pct@wipo.int

Form PCT/IB/326 (January 2004)

PATENT COOPERATION TREATY

PCT

INTERNATIONAL PRELIMINARY REPORT ON PATENTABILITY

(Chapter I of the Patent Cooperation Treaty)

(PCT Rule 44*bis*)

Applicant's or agent's file reference 22287-27-1PC	**FOR FURTHER ACTION**	See item 4 below
International application No. PCT/US2010/031627	International filing date *(day/month/year)* 19 April 2010 (19.04.2010)	Priority date *(day/month/year)* 17 April 2009 (17.04.2009)
International Patent Classification (8th edition unless older edition indicated) See relevant information in Form PCT/ISA/237		
Applicant MAXLINEAR, INC.		

1. This international preliminary report on patentability (Chapter I) is issued by the International Bureau on behalf of the International Searching Authority under Rule 44 *bis*.1(a).

2. This REPORT consists of a total of 6 sheets, including this cover sheet.

   In the attached sheets, any reference to the written opinion of the International Searching Authority should be read as a reference to the international preliminary report on patentability (Chapter I) instead.

3. This report contains indications relating to the following items:

☒	Box No. I	Basis of the report
☐	Box No. II	Priority
☐	Box No. III	Non-establishment of opinion with regard to novelty, inventive step and industrial applicability
☐	Box No. IV	Lack of unity of invention
☒	Box No. V	Reasoned statement under Article 35(2) with regard to novelty, inventive step or industrial applicability; citations and explanations supporting such statement
☐	Box No. VI	Certain documents cited
☐	Box No. VII	Certain defects in the international application
☐	Box No. VIII	Certain observations on the international application

4. The International Bureau will communicate this report to designated Offices in accordance with Rules 44*bis*.3(c) and 93*bis*.1 but not, except where the applicant makes an express request under Article 23(2), before the expiration of 30 months from the priority date (Rule 44*bis* .2).

	Date of issuance of this report 18 October 2011 (18.10.2011)
The International Bureau of WIPO 34, chemin des Colombettes 1211 Geneva 20, Switzerland Facsimile No. +41 22 338 82 70	Authorized officer Yolaine Cussac e-mail: pt05.pct@wipo.int

Form PCT/IB/373 (January 2004)

PATENT COOPERATION TREATY

From the
INTERNATIONAL SEARCHING AUTHORITY

To:
ARDESHIR TABIBI
TOWNSEND AND TOWNSEND AND CREW LLP
8TH FLOOR
TWO EMBARCADERO CENTER
SAN FRANCISCO, CA 94111

PCT

WRITTEN OPINION OF THE INTERNATIONAL SEARCHING AUTHORITY

(PCT Rule 43*bis*.1)

Date of mailing *(day/month/year)* 18 JUN 2010

Applicant's or agent's file reference
22287-27-1PC

FOR FURTHER ACTION
See paragraph 2 below

International application No.	International filing date *(day/month/year)*	Priority date *(day/month/year)*
PCT/US2010/031627	19 April 2010	17 April 2009

International Patent Classification (IPC) or both national classification and IPC
IPC(8) - H04B 1/06 (2010.01)
USPC - 455/260

Applicant MAXLINEAR, INC.

1. This opinion contains indications relating to the following items:

- [x] Box No. I Basis of the opinion
- [ ] Box No. II Priority
- [ ] Box No. III Non-establishment of opinion with regard to novelty, inventive step and industrial applicability
- [ ] Box No. IV Lack of unity of invention
- [x] Box No. V Reasoned statement under Rule 43*bis*.1(a)(i) with regard to novelty, inventive step or industrial applicability; citations and explanations supporting such statement
- [ ] Box No. VI Certain documents cited
- [ ] Box No. VII Certain defects in the international application
- [ ] Box No. VIII Certain observations on the international application

2. **FURTHER ACTION**

If a demand for international preliminary examination is made, this opinion will be considered to be a written opinion of the International Preliminary Examining Authority ("IPEA") except that this does not apply where the applicant chooses an Authority other than this one to be the IPEA and the chosen IPEA has notified the International Bureau under Rule 66.1*bis*(b) that written opinions of this International Searching Authority will not be so considered.

If this opinion is, as provided above, considered to be a written opinion of the IPEA, the applicant is invited to submit to the IPEA a written reply together, where appropriate, with amendments, before the expiration of 3 months from the date of mailing of Form PCT/ISA/220 or before the expiration of 22 months from the priority date, whichever expires later.

For further options, see Form PCT/ISA/220.

3. For further details, see notes to Form PCT/ISA/220.

Name and mailing address of the ISA/US	Date of completion of this opinion	Authorized officer:
Mail Stop PCT, Attn: ISA/US Commissioner for Patents P.O. Box 1450, Alexandria, Virginia 22313-1450 Facsimile No. 571-273-3201	26 May 2010	Blaine Copenheaver PCT Helpdesk: 571-272-4300 PCT OSP: 571-272-7774

Form PCT/ISA/237 (cover sheet) (April 2007)

WRITTEN OPINION OF THE INTERNATIONAL SEARCHING AUTHORITY

International application No.
PCT/US2010/031627

Box No. I Basis of this opinion

1. With regard to the **language**, this opinion has been established on the basis of:
   - [X] the international application in the language in which it was filed.
   - [ ] a translation of the international application into _____ which is the language of a translation furnished for the purposes of international search (Rules 12.3(a) and 23.1(b)).

2. [ ] This opinion has been established taking into account the **rectification of an obvious mistake** authorized by or notified to this Authority under Rule 91 (Rule 43*bis*.1(a))

3. With regard to any **nucleotide and/or amino acid sequence** disclosed in the international application, this opinion has been established on the basis of:
   a. type of material
      - [ ] a sequence listing
      - [ ] table(s) related to the sequence listing

   b. format of material
      - [ ] on paper
      - [ ] in electronic form

   c. time of filing/furnishing
      - [ ] contained in the international application as filed
      - [ ] filed together with the international application in electronic form
      - [ ] furnished subsequently to this Authority for the purposes of search

4. [ ] In addition, in the case that more than one version or copy of a sequence listing and/or table(s) relating thereto has been filed or furnished, the required statements that the information in the subsequent or additional copies is identical to that in the application as filed or does not go beyond the application as filed, as appropriate, were furnished.

5. Additional comments:

WRITTEN OPINION OF THE INTERNATIONAL SEARCHING AUTHORITY

International application No. PCT/US2010/031627

Box No. V **Reasoned statement under Rule 43*bis*.1(a)(i) with regard to novelty, inventive step or industrial applicability; citations and explanations supporting such statement**

1. Statement

Novelty (N)	Claims	4, 7-9 and 16-25	YES
	Claims	1-3, 5, 6, 10-15, 26 and 27	NO
Inventive step (IS)	Claims	None	YES
	Claims	1-27	NO
Industrial applicability (IA)	Claims	1-27	YES
	Claims	None	NO

2. Citations and explanations:

Claims 1-3, 5, 6, 10-15, 26 and 27 lack novelty under PCT Article 33(2) as being anticipated by Feher.

Regarding claim 1, Feher discloses a wideband receiver system (paragraph [0231]) comprising: a wideband receiver configured to concurrently receive a plurality of desired RF channels (in-phase and quadrature-phase baseband channels, paragraph [0276]); said wideband receiver comprising: a mixer module (multipliers also known as mixers, paragraphs [236] and [0243]) coupled to the plurality of desired RF channels and having a first mixer (mixer 11.13 of Fig. 17b) configured to generate an in-phase signal and a second mixer (mixer 11.16 of Fig. 17b) configured to generate a quadrature signal (an in-phase (I) and quadrature (Q) channels, Fig. 6 and paragraph [0237]); a wideband analog-to-digital converter (ADC) module (paragraph [0247]) having a first wideband ADC (19.15 of Fig. 19) coupled with the in-phase signal and configured to generate a digitalized in-phase signal and a second wideband ADC (19.8 of Fig. 19) coupled with the quadrature signal and configured to generate a digitalized quadrature signal (paragraph [0257]); and a digital frontend (DFE) module (5.17 and 5.5 of Fig. 5) having a plurality of complex mixers (5.8 and 5.20 of Fig. 5) coupled to the digital in-phase and quadrature signals, each one of the plurality of complex mixers frequency-shifting a different one of the plurality of the desired RF channels to a baseband signal (paragraph [0236]).

Regarding claim 2, Feher discloses a local oscillator (5.9 and 5.21 of Fig. 5) having an oscillator frequency centered around the plurality of the desired RF channels (paragraph [0236]).

Regarding claim 3, Feher discloses that the local oscillator comprises a phaselocked loop (paragraph [0247]).

Regarding claim 5, Feher discloses that each one of the plurality of complex mixers comprises a pair of digital multipliers (5.8 and 5.20 of Fig. 5), each pair of the digital multipliers is coupled to a numerically controlled oscillator (5.9 and 5.21 of Fig. 5) (multipliers 5.8 and 5.20 of Fig. 5 are coupled to oscillators 5.9 and 5.21 of Fig. 5, respectively, paragraph [0236]).

Regarding claim 6, Feher discloses that the DFE module (5.17 and 5.5 of Fig. 5) further comprises a plurality of channel filters (5.6 and 5.18 of Fig. 5), each one of the plurality of channel filters is coupled to each one of the plurality of complex mixers (5.8 and 5.20 of Fig. 5) and configured to filter one of the plurality of the desired channels (paragraph [0236]).

Regarding claim 10, Feher discloses an up-converter module (20.4b of Fig. 20) configured to frequency-shift the plurality of desired RF channels in the baseband to an intermediate frequency band (paragraph [0258]).

Regarding claim 11, Feher discloses that the up-converter module (20.4b of Fig. 20) comprises a plurality of N up-mixers (5.8 and 5.20 of Fig. 5) having a plurality of associated oscillator frequencies (5.9 and 5.21 of Fig. 5), wherein N is an integer value equal to the plurality of the desired RF channels (paragraph [0261]); wherein the plurality of associated oscillator frequencies are so chosen so that when mixing with the plurality of desired channels in the baseband, the mixed products occupy a contiguous frequency spectrum, or a substantially-contiguous frequency spectrum with one or more spacings between the desired channels (paragraphs [0246] and [0280]), wherein the one or more spacings are variable (inherent in a spread frequency spectrum), and wherein the one or more spacings are smaller than or comparable to a channel bandwidth, or small measured as a fraction of the bandwidth of the first and second wideband ADCs (paragraphs [0236], [0237] and [0257]).

Regarding claim 12, Feher discloses that the mixed products comprise spectra that are spaced in such a way so as to avoid overlap with known frequency bands containing potential or actual interferers (paragraph [0261]).

Regarding claim 13, Feher discloses that the mixed products comprise spectra that are spaced in such a way so as to avoid overlap with known frequency bands that introduce interference to other systems (paragraph [0261]).

WRITTEN OPINION OF THE INTERNATIONAL SEARCHING AUTHORITY

International application No.
PCT/US2010/031627

Supplemental Box

In case the space in any of the preceding boxes is not sufficient.
Continuation of:

Regarding claim 14, Feher discloses that each one of the plurality of N up-mixers is a digital complex mixer (5.8 and 5.20 of Fig. 5) and each one of the plurality of associated oscillator frequencies (5.9 and 5.21 of Fig. 5) is generated by a numerically controlled oscillator (numerically controlled oscillator, paragraph [0247]).

Regarding claim 15, Feher discloses a digital-to-analog converter (paragraphs [0247] and [0254]) configured to convert the contiguous group of channels in the intermediate frequency spectrum to an analog waveform.

Regarding claim 26, Feher discloses a method of receiving a plurality of radio frequency (RF) channels including a number of desired channels (paragraphs [0221] and [0231]) that are located in non-contiguous portions of a frequency spectrum and grouping the desired channels in a contiguous frequency spectrum (paragraph [0261]), the method comprising: concurrently receiving the plurality of RF channels; producing an in-phase signal and a quadrature signal by mixing the plurality of RF channels (in-phase and quadrature-phase baseband channels, paragraph [0276]) with a first oscillator frequency 5.9 of Fig. 5) and a second local frequency (5.21 of Fig. 5); digitizing the in-phase and quadrature signals (19.10a of Fig. 19); and frequency down-shifting the digital in-phase and quadrature signals to a baseband signal using a number of complex mixers (mixers 11.13 and 11.16 of Fig. 17b, paragraphs [236] and [0243]), wherein the first and second oscillator frequencies are identical and have a phase shift of 90' degree between them, wherein the number of complex mixers correspond to the number of desired channels (Feher, paragraph [0243]).

Regarding claim 27, Feher discloses frequency up-shifting the baseband signal to an intermediate frequency; and converting the frequency up-shifted baseband signal to an analog waveform (paragraphs [0247] and [0254]).

Claims 4 and 16-25 lack an inventive step under PCT Article 33(3) as being obvious over Feher in view of Currivan.

Regarding claims 4 and 24, Feher discloses that the desired RF channels conform to Video over Internet Protocol (VoIP) as well as Voice over Internet Protocol (VoIP) (paragraph [0236]). However, Feher fails to disclose that the plurality of desired RF channels conform to a Data Over Cable Service Interface Specification (DOCSIS) protocol. In the same field of endeavor, Currivan discloses that the plurality of desired RF channels conform to a Data Over Cable Service Interface Specification (DOCSIS) protocol (paragraphs [0027] and [0028]). It would have been obvious to one of ordinary skill in the art at the time of the invention to use the teachings of Currivan to incorporate the above features into the invention of Feher for the benefit of providing an equivalent data throughput of N channels to a user, though the user perceives a single channel (Currivan, paragraph [0027]).

Regarding claim 16, Feher discloses a multi-tuner receiver system (paragraphs [0221] and [0231]) for receiving a plurality of desired radio frequency (RF) channels (in-phase and quadrature-phase baseband channels, paragraph [0276]) that extend over multiple non-contiguous portions of a broad frequency spectrum and grouping them in a contiguous frequency spectrum, the system comprising: a first tuner (multiple receiver, paragraph [0200]) configured to receive a first portion of the broad frequency spectrum, the first tuner includes a first mixer (mixer 11.13 of Fig. 17b) module coupled to a first oscillator (5.9 of Fig. 5) and is configured to generate a first in-phase signal and a first quadrature signal (an in-phase (I) and quadrature (Q) channels, Fig. 6 and paragraph [0237]); a second tuner (multiple receiver, paragraph [0200]) configured to receive a second portion of the broad frequency spectrum, the second tuner includes a second mixer module (mixer 11.16 of Fig. 17b) coupled to a second oscillator (5.21 of Fig. 5) and is configured to generate a second in-phase signal and a second quadrature signal (an in-phase (I) and quadrature (Q) channels, Fig. 6 and paragraph [0237]); a first analog-to-digital converter module (19.10a of Fig. 19) configured to digitize the first in-phase and quadrature signals; a second analog-to-digital converter module (19.2 of Fig. 19) configured to digitize the second in-phase and quadrature signals (paragraphs [0247] and [0254]). Feher fails to disclose first and second digital frontends. In the same field of endeavor, Currivan discloses a first digital frontend (DFE) module (112 sub 1 of Fig. 1) having a first bank of down-mixers coupled to the first digital in-phase and quadrature signals, each of the first bank of down-mixers is configured to frequency shift one of the desired RF channels in the first portion of the broad frequency spectrum (paragraphs [0019], [0031] and [0078]); and a second digital frontend (DFE) module (112 sub 2 of Fig. 1) having a second bank of down-mixers coupled to the second digital in-phase and quadrature signals, each of the second bank of down-mixers is configured to frequency shift one of the desired RF channels in the second portion of the broad frequency spectrum; wherein the first DFE module frequency-shifts the desired RF channels in the first portion of the broad frequency spectrum to a first portion of a baseband signal (paragraphs [0019], [0031] and [0078]); wherein the second DFE module frequency-shifts the desired RF channels in the second portion of the broad frequency spectrum to a second portion of the baseband signal (paragraphs [0018]-[0021]). It would have been obvious to one of ordinary skill in the art at the time of the invention to use the teachings of Currivan to incorporate the above features into the invention of Feher for the benefit of selecting a first baseband signal corresponding to a first channel and for selecting a second baseband signal corresponding to a second channel, respectively (Currivan, paragraph [0019]).

Regarding claim 17, Currivan discloses a crossbar switch (a carrier adjustment module) interposed between the first and second analog-to-digital converter modules and the first and second DFE modules (paragraph [0019]).

Regarding claim 18, Feher discloses a first up-converter module (20.3b of Fig. 20) having a first bank of up-mixers (mixer 11.13 of Fig. 17b) coupled to the first portion of the baseband signal and configured to frequency shift the first portion of the baseband signal to a first portion of an intermediate frequency spectrum (5.9 of Fig. 5 and an in-phase (I) and quadrature (Q) channels, Fig. 6 and paragraph [0237]); a second up-converter module (20.4b of Fig. 20) having a second bank of up-mixers (mixer 11.16 of Fig. 17b) coupled to the second portion of the baseband signal and configured to frequency shift the second portion of the baseband signal to a second portion of the intermediate frequency spectrum (5.21 of Fig. 5 and an in-phase (I) and quadrature (Q) channels, Fig. 6 and paragraph [0237]); and a digital-to-analog converter (19.10a and 19.2 of Fig. 19) configured to convert the first and second portions of the intermediate frequency spectrum to an analog waveform signal (paragraphs [0247] and [0254]).

WRITTEN OPINION OF THE INTERNATIONAL SEARCHING AUTHORITY

International application No.
PCT/US2010/031627

Supplemental Box

In case the space in any of the preceding boxes is not sufficient.
Continuation of:

Regarding claim 19, Currivan discloses a crossbar switch interposed between the first and second DFE modules and the first and second up-converter modules (a carrier adjustment module).

Regarding claim 20, Feher discloses that the first and second portions are adjacent to each other and non-overlapping (paragraph [0261]).

Regarding claim 21, Feher discloses that each one of the first bank of down-mixers comprises a pair of digital multiplier having an input terminal coupled to a numerically controlled oscillator (multipliers also known as mixers, paragraphs [236] and [0243]).

Regarding claim 22, Feher discloses that the first DFE module (5.17 of Fig. 5) further comprises a plurality of channel filters (5.6 and 5.18 of Fig. 5), each one of the plurality of channel filters is coupled to each one of the first bank of down-mixers (5.8 and 5.20 of Fig. 5) and configured to filter one of the frequency down-shifted RF channels (paragraph [0236]).

Regarding claim 23, Feher discloses that the plurality of desired RF channels conform to one of a digital video broadcasting (DVB) standard (paragraph [0190]).

Regarding claim 25, Feher discloses that the plurality of RF channels conform to a television broadcasting standard (paragraph [0231]).

Claims 7-9 lack an inventive step under PCT Article 33(3) as being obvious over Feher in view of Hoctor.

Regarding claim 7, Feher discloses a plurality of channel filters (5.6 and 5.18 of Fig. 5). Feher fails to disclose that each one of the plurality of channel filters is a finite impulse response filter. In the same field of endeavor, Hoctor discloses that each one of the plurality of channel filters is a finite impulse response filter (paragraph [0061]). It would have been obvious to one of ordinary skill in the art at the time of the invention to use the teachings of Hoctor to incorporate the above features into the invention of Feher for the benefit of processing signals processed by the decimation filter (Hoctor, paragraph [0061]).

Regarding claim 8, Feher discloses a plurality of channel filters (5.6 and 5.18 of Fig. 5). Feher fails to disclose that the DFE module further comprises a decimator module configured to decimate each one of the plurality of the desired channels in the baseband. In the same field of endeavor, Hoctor discloses that the DFE module (paragraph [0067]) further comprises a decimator module (paragraph [0061]) configured to decimate each one of the plurality of the desired channels in the baseband (paragraph [0059]). It would have been obvious to one of ordinary skill in the art at the time of the invention to use the teachings of Hoctor to incorporate the above features into the invention of Feher for the benefit of eliminating undesirable signals and reduce the sampling rate to an appropriate frequency for baseband operation (Hoctor, paragraph [0059]).

Regarding claim 9, Feher discloses a plurality of channel filters (5.6 and 5.18 of Fig. 5). Feher fails to disclose that the DFE module further comprises a decimator module configured to decimate each one of the plurality of the desired channels to a demodulator. In the same field of endeavor, Hoctor discloses that the DFE module (paragraph [0067]) further comprises a decimator module (paragraph [0061]) configured to decimate each one of the plurality of the desired channels to a demodulator (paragraph [0064]). It would have been obvious to one of ordinary skill in the art at the time of the invention to use the teachings of Hoctor to incorporate the above features into the invention of Feher for the benefit of eliminating undesirable signals and reduce the sampling rate to an appropriate frequency for baseband operation (Hoctor, paragraph [0059]).

Claims 1-27 meet the criteria set out in PCT Article 33(4), and thus have industrial applicability because the subject matter claimed can be made or used in industry.

Electronic Acknowledgement Receipt

EFS ID:	21696298
Application Number:	13962871
International Application Number:	
Confirmation Number:	3953
Title of Invention:	WIDEBAND TUNER ARCHITECTURE
First Named Inventor/Applicant Name:	Madhukar Reddy
Customer Number:	20350
Filer:	Ardeshir Tabibi/Yvonne Mock
Filer Authorized By:	Ardeshir Tabibi
Attorney Docket Number:	89194-002720US-883946
Receipt Date:	06-MAR-2015
Filing Date:	08-AUG-2013
Time Stamp:	14:00:01
Application Type:	Utility under 35 USC 111(a)

Payment information:

Submitted with Payment	no

File Listing:

Document Number	Document Description	File Name	File Size(Bytes)/ Message Digest	Multi Part /.zip	Pages (if appl.)
1		IDS_89194-002720US-883946.pdf	153037 a81b260b65cc9c3838bebaca9b1c30f13aa24468	yes	6

	Multipart Description/PDF files in .zip description		
	Document Description	**Start**	**End**
	Information Disclosure Statement (IDS) Form (SB08)	1	2
	Information Disclosure Statement (IDS) Form (SB08)	3	6

Warnings:

Information:

2	Non Patent Literature	IPRP_89194-002720US-883946.pdf	944978 c07599e12aaf2caba6dcb7b8fd27fadae71e4f7c	no	7

Warnings:

Information:

Total Files Size (in bytes):	1098015

This Acknowledgement Receipt evidences receipt on the noted date by the USPTO of the indicated documents, characterized by the applicant, and including page counts, where applicable. It serves as evidence of receipt similar to a Post Card, as described in MPEP 503.

New Applications Under 35 U.S.C. 111
If a new application is being filed and the application includes the necessary components for a filing date (see 37 CFR 1.53(b)-(d) and MPEP 506), a Filing Receipt (37 CFR 1.54) will be issued in due course and the date shown on this Acknowledgement Receipt will establish the filing date of the application.

National Stage of an International Application under 35 U.S.C. 371
If a timely submission to enter the national stage of an international application is compliant with the conditions of 35 U.S.C. 371 and other applicable requirements a Form PCT/DO/EO/903 indicating acceptance of the application as a national stage submission under 35 U.S.C. 371 will be issued in addition to the Filing Receipt, in due course.

New International Application Filed with the USPTO as a Receiving Office
If a new international application is being filed and the international application includes the necessary components for an international filing date (see PCT Article 11 and MPEP 1810), a Notification of the International Application Number and of the International Filing Date (Form PCT/RO/105) will be issued in due course, subject to prescriptions concerning national security, and the date shown on this Acknowledgement Receipt will establish the international filing date of the application.

UNITED STATES PATENT AND TRADEMARK OFFICE

UNITED STATES DEPARTMENT OF COMMERCE
United States Patent and Trademark Office
Address: COMMISSIONER FOR PATENTS
P.O. Box 1450
Alexandria, Virginia 22313-1450
www.uspto.gov

NOTICE OF ALLOWANCE AND FEE(S) DUE

20350 7590 03/27/2015
KILPATRICK TOWNSEND & STOCKTON LLP
TWO EMBARCADERO CENTER
EIGHTH FLOOR
SAN FRANCISCO, CA 94111-3834

EXAMINER
JACKSON, BLANE J

ART UNIT	PAPER NUMBER
2649	

DATE MAILED: 03/27/2015

APPLICATION NO.	FILING DATE	FIRST NAMED INVENTOR	ATTORNEY DOCKET NO.	CONFIRMATION NO.
13/962,871	08/08/2013	Madhukar Reddy	89194-002720US-883946	3953

TITLE OF INVENTION: WIDEBAND TUNER ARCHITECTURE

APPLN. TYPE	ENTITY STATUS	ISSUE FEE DUE	PUBLICATION FEE DUE	PREV. PAID ISSUE FEE	TOTAL FEE(S) DUE	DATE DUE
nonprovisional	SMALL	$480	$0	$0	$480	06/29/2015

THE APPLICATION IDENTIFIED ABOVE HAS BEEN EXAMINED AND IS ALLOWED FOR ISSUANCE AS A PATENT. PROSECUTION ON THE MERITS IS CLOSED. THIS NOTICE OF ALLOWANCE IS NOT A GRANT OF PATENT RIGHTS. THIS APPLICATION IS SUBJECT TO WITHDRAWAL FROM ISSUE AT THE INITIATIVE OF THE OFFICE OR UPON PETITION BY THE APPLICANT. SEE 37 CFR 1.313 AND MPEP 1308.

THE ISSUE FEE AND PUBLICATION FEE (IF REQUIRED) MUST BE PAID WITHIN THREE MONTHS FROM THE MAILING DATE OF THIS NOTICE OR THIS APPLICATION SHALL BE REGARDED AS ABANDONED. THIS STATUTORY PERIOD CANNOT BE EXTENDED. SEE 35 U.S.C. 151. THE ISSUE FEE DUE INDICATED ABOVE DOES NOT REFLECT A CREDIT FOR ANY PREVIOUSLY PAID ISSUE FEE IN THIS APPLICATION. IF AN ISSUE FEE HAS PREVIOUSLY BEEN PAID IN THIS APPLICATION (AS SHOWN ABOVE), THE RETURN OF PART B OF THIS FORM WILL BE CONSIDERED A REQUEST TO REAPPLY THE PREVIOUSLY PAID ISSUE FEE TOWARD THE ISSUE FEE NOW DUE.

HOW TO REPLY TO THIS NOTICE:

I. Review the ENTITY STATUS shown above. If the ENTITY STATUS is shown as SMALL or MICRO, verify whether entitlement to that entity status still applies.

If the ENTITY STATUS is the same as shown above, pay the TOTAL FEE(S) DUE shown above.

If the ENTITY STATUS is changed from that shown above, on PART B - FEE(S) TRANSMITTAL, complete section number 5 titled "Change in Entity Status (from status indicated above)".

For purposes of this notice, small entity fees are 1/2 the amount of undiscounted fees, and micro entity fees are 1/2 the amount of small entity fees.

II. PART B - FEE(S) TRANSMITTAL, or its equivalent, must be completed and returned to the United States Patent and Trademark Office (USPTO) with your ISSUE FEE and PUBLICATION FEE (if required). If you are charging the fee(s) to your deposit account, section "4b" of Part B - Fee(s) Transmittal should be completed and an extra copy of the form should be submitted. If an equivalent of Part B is filed, a request to reapply a previously paid issue fee must be clearly made, and delays in processing may occur due to the difficulty in recognizing the paper as an equivalent of Part B.

III. All communications regarding this application must give the application number. Please direct all communications prior to issuance to Mail Stop ISSUE FEE unless advised to the contrary.

IMPORTANT REMINDER: Utility patents issuing on applications filed on or after Dec. 12, 1980 may require payment of maintenance fees. It is patentee's responsibility to ensure timely payment of maintenance fees when due.

PART B - FEE(S) TRANSMITTAL

Complete and send this form, together with applicable fee(s), to: Mail **Mail Stop ISSUE FEE**
Commissioner for Patents
P.O. Box 1450
Alexandria, Virginia 22313-1450
or Fax (571)-273-2885

INSTRUCTIONS: This form should be used for transmitting the ISSUE FEE and PUBLICATION FEE (if required). Blocks 1 through 5 should be completed where appropriate. All further correspondence including the Patent, advance orders and notification of maintenance fees will be mailed to the current correspondence address as indicated unless corrected below or directed otherwise in Block 1, by (a) specifying a new correspondence address; and/or (b) indicating a separate "FEE ADDRESS" for maintenance fee notifications.

CURRENT CORRESPONDENCE ADDRESS (Note: Use Block 1 for any change of address)

20350 7590 03/27/2015
KILPATRICK TOWNSEND & STOCKTON LLP
TWO EMBARCADERO CENTER
EIGHTH FLOOR
SAN FRANCISCO, CA 94111-3834

Note: A certificate of mailing can only be used for domestic mailings of the Fee(s) Transmittal. This certificate cannot be used for any other accompanying papers. Each additional paper, such as an assignment or formal drawing, must have its own certificate of mailing or transmission.

Certificate of Mailing or Transmission
I hereby certify that this Fee(s) Transmittal is being deposited with the United States Postal Service with sufficient postage for first class mail in an envelope addressed to the Mail Stop ISSUE FEE address above, or being facsimile transmitted to the USPTO (571) 273-2885, on the date indicated below.

(Depositor's name)
(Signature)
(Date)

APPLICATION NO.	FILING DATE	FIRST NAMED INVENTOR	ATTORNEY DOCKET NO.	CONFIRMATION NO.
13/962,871	08/08/2013	Madhukar Reddy	89194-002720US-883946	3953

TITLE OF INVENTION: WIDEBAND TUNER ARCHITECTURE

APPLN. TYPE	ENTITY STATUS	ISSUE FEE DUE	PUBLICATION FEE DUE	PREV. PAID ISSUE FEE	TOTAL FEE(S) DUE	DATE DUE
nonprovisional	SMALL	$480	$0	$0	$480	06/29/2015

EXAMINER	ART UNIT	CLASS-SUBCLASS
JACKSON, BLANE J	2649	455-207000

1. Change of correspondence address or indication of "Fee Address" (37 CFR 1.363).
❑ Change of correspondence address (or Change of Correspondence Address form PTO/SB/122) attached.
❑ "Fee Address" indication (or "Fee Address" Indication form PTO/SB/47; Rev 03-02 or more recent) attached. **Use of a Customer Number is required.**

2. For printing on the patent front page, list
(1) The names of up to 3 registered patent attorneys or agents OR, alternatively,
(2) The name of a single firm (having as a member a registered attorney or agent) and the names of up to 2 registered patent attorneys or agents. If no name is listed, no name will be printed.
1_____
2_____
3_____

3. ASSIGNEE NAME AND RESIDENCE DATA TO BE PRINTED ON THE PATENT (print or type)

PLEASE NOTE: Unless an assignee is identified below, no assignee data will appear on the patent. If an assignee is identified below, the document has been filed for recordation as set forth in 37 CFR 3.11. Completion of this form is NOT a substitute for filing an assignment.

(A) NAME OF ASSIGNEE (B) RESIDENCE: (CITY and STATE OR COUNTRY)

Please check the appropriate assignee category or categories (will not be printed on the patent) : ❑ Individual ❑ Corporation or other private group entity ❑ Government

4a. The following fee(s) are submitted:
❑ Issue Fee
❑ Publication Fee (No small entity discount permitted)
❑ Advance Order - # of Copies _____

4b. Payment of Fee(s): **(Please first reapply any previously paid issue fee shown above)**
❑ A check is enclosed.
❑ Payment by credit card. Form PTO-2038 is attached.
❑ The director is hereby authorized to charge the required fee(s), any deficiency, or credits any overpayment, to Deposit Account Number _____ (enclose an extra copy of this form).

5. **Change in Entity Status** (from status indicated above)
❑ Applicant certifying micro entity status. See 37 CFR 1.29 — NOTE: Absent a valid certification of Micro Entity Status (see forms PTO/SB/15A and 15B), issue fee payment in the micro entity amount will not be accepted at the risk of application abandonment.
❑ Applicant asserting small entity status. See 37 CFR 1.27 — NOTE: If the application was previously under micro entity status, checking this box will be taken to be a notification of loss of entitlement to micro entity status.
❑ Applicant changing to regular undiscounted fee status. — NOTE: Checking this box will be taken to be a notification of loss of entitlement to small or micro entity status, as applicable.

NOTE: This form must be signed in accordance with 37 CFR 1.31 and 1.33. See 37 CFR 1.4 for signature requirements and certifications.

Authorized Signature _____ Date _____

Typed or printed name _____ Registration No. _____

UNITED STATES PATENT AND TRADEMARK OFFICE

UNITED STATES DEPARTMENT OF COMMERCE
United States Patent and Trademark Office
Address: COMMISSIONER FOR PATENTS
P.O. Box 1450
Alexandria, Virginia 22313-1450
www.uspto.gov

APPLICATION NO.	FILING DATE	FIRST NAMED INVENTOR	ATTORNEY DOCKET NO.	CONFIRMATION NO.
13/962,871	08/08/2013	Madhukar Reddy	89194-002720US-883946	3953

20350 7590 03/27/2015
KILPATRICK TOWNSEND & STOCKTON LLP
TWO EMBARCADERO CENTER
EIGHTH FLOOR
SAN FRANCISCO, CA 94111-3834

EXAMINER
JACKSON, BLANE J

ART UNIT	PAPER NUMBER
2649	

DATE MAILED: 03/27/2015

Determination of Patent Term Adjustment under 35 U.S.C. 154 (b)
(Applications filed on or after May 29, 2000)

The Office has discontinued providing a Patent Term Adjustment (PTA) calculation with the Notice of Allowance.

Section 1(h)(2) of the AIA Technical Corrections Act amended 35 U.S.C. 154(b)(3)(B)(i) to eliminate the requirement that the Office provide a patent term adjustment determination with the notice of allowance. See Revisions to Patent Term Adjustment, 78 Fed. Reg. 19416, 19417 (Apr. 1, 2013). Therefore, the Office is no longer providing an initial patent term adjustment determination with the notice of allowance. The Office will continue to provide a patent term adjustment determination with the Issue Notification Letter that is mailed to applicant approximately three weeks prior to the issue date of the patent, and will include the patent term adjustment on the patent. Any request for reconsideration of the patent term adjustment determination (or reinstatement of patent term adjustment) should follow the process outlined in 37 CFR 1.705.

Any questions regarding the Patent Term Extension or Adjustment determination should be directed to the Office of Patent Legal Administration at (571)-272-7702. Questions relating to issue and publication fee payments should be directed to the Customer Service Center of the Office of Patent Publication at 1-(888)-786-0101 or (571)-272-4200.

OMB Clearance and PRA Burden Statement for PTOL-85 Part B

The Paperwork Reduction Act (PRA) of 1995 requires Federal agencies to obtain Office of Management and Budget approval before requesting most types of information from the public. When OMB approves an agency request to collect information from the public, OMB (i) provides a valid OMB Control Number and expiration date for the agency to display on the instrument that will be used to collect the information and (ii) requires the agency to inform the public about the OMB Control Number's legal significance in accordance with 5 CFR 1320.5(b).

The information collected by PTOL-85 Part B is required by 37 CFR 1.311. The information is required to obtain or retain a benefit by the public which is to file (and by the USPTO to process) an application. Confidentiality is governed by 35 U.S.C. 122 and 37 CFR 1.14. This collection is estimated to take 12 minutes to complete, including gathering, preparing, and submitting the completed application form to the USPTO. Time will vary depending upon the individual case. Any comments on the amount of time you require to complete this form and/or suggestions for reducing this burden, should be sent to the Chief Information Officer, U.S. Patent and Trademark Office, U.S. Department of Commerce, P.O. Box 1450, Alexandria, Virginia 22313-1450. DO NOT SEND FEES OR COMPLETED FORMS TO THIS ADDRESS. SEND TO: Commissioner for Patents, P.O. Box 1450, Alexandria, Virginia 22313-1450. Under the Paperwork Reduction Act of 1995, no persons are required to respond to a collection of information unless it displays a valid OMB control number.

Privacy Act Statement

The Privacy Act of 1974 (P.L. 93-579) requires that you be given certain information in connection with your submission of the attached form related to a patent application or patent. Accordingly, pursuant to the requirements of the Act, please be advised that: (1) the general authority for the collection of this information is 35 U.S.C. 2(b)(2); (2) furnishing of the information solicited is voluntary; and (3) the principal purpose for which the information is used by the U.S. Patent and Trademark Office is to process and/or examine your submission related to a patent application or patent. If you do not furnish the requested information, the U.S. Patent and Trademark Office may not be able to process and/or examine your submission, which may result in termination of proceedings or abandonment of the application or expiration of the patent.

The information provided by you in this form will be subject to the following routine uses:

1. The information on this form will be treated confidentially to the extent allowed under the Freedom of Information Act (5 U.S.C. 552) and the Privacy Act (5 U.S.C 552a). Records from this system of records may be disclosed to the Department of Justice to determine whether disclosure of these records is required by the Freedom of Information Act.
2. A record from this system of records may be disclosed, as a routine use, in the course of presenting evidence to a court, magistrate, or administrative tribunal, including disclosures to opposing counsel in the course of settlement negotiations.
3. A record in this system of records may be disclosed, as a routine use, to a Member of Congress submitting a request involving an individual, to whom the record pertains, when the individual has requested assistance from the Member with respect to the subject matter of the record.
4. A record in this system of records may be disclosed, as a routine use, to a contractor of the Agency having need for the information in order to perform a contract. Recipients of information shall be required to comply with the requirements of the Privacy Act of 1974, as amended, pursuant to 5 U.S.C. 552a(m).
5. A record related to an International Application filed under the Patent Cooperation Treaty in this system of records may be disclosed, as a routine use, to the International Bureau of the World Intellectual Property Organization, pursuant to the Patent Cooperation Treaty.
6. A record in this system of records may be disclosed, as a routine use, to another federal agency for purposes of National Security review (35 U.S.C. 181) and for review pursuant to the Atomic Energy Act (42 U.S.C. 218(c)).
7. A record from this system of records may be disclosed, as a routine use, to the Administrator, General Services, or his/her designee, during an inspection of records conducted by GSA as part of that agency's responsibility to recommend improvements in records management practices and programs, under authority of 44 U.S.C. 2904 and 2906. Such disclosure shall be made in accordance with the GSA regulations governing inspection of records for this purpose, and any other relevant (i.e., GSA or Commerce) directive. Such disclosure shall not be used to make determinations about individuals.
8. A record from this system of records may be disclosed, as a routine use, to the public after either publication of the application pursuant to 35 U.S.C. 122(b) or issuance of a patent pursuant to 35 U.S.C. 151. Further, a record may be disclosed, subject to the limitations of 37 CFR 1.14, as a routine use, to the public if the record was filed in an application which became abandoned or in which the proceedings were terminated and which application is referenced by either a published application, an application open to public inspection or an issued patent.
9. A record from this system of records may be disclosed, as a routine use, to a Federal, State, or local law enforcement agency, if the USPTO becomes aware of a violation or potential violation of law or regulation.

Notice of Allowability	Application No. 13/962,871	Applicant(s) REDDY ET AL.	
	Examiner BLANE J. JACKSON	Art Unit 2649	AIA (First Inventor to File) Status No

-- The MAILING DATE of this communication appears on the cover sheet with the correspondence address--

All claims being allowable, PROSECUTION ON THE MERITS IS (OR REMAINS) CLOSED in this application. If not included herewith (or previously mailed), a Notice of Allowance (PTOL-85) or other appropriate communication will be mailed in due course. **THIS NOTICE OF ALLOWABILITY IS NOT A GRANT OF PATENT RIGHTS.** This application is subject to withdrawal from issue at the initiative of the Office or upon petition by the applicant. See 37 CFR 1.313 and MPEP 1308.

1. ☒ This communication is responsive to *the RCE filed 06 March 2015*.
   ☐ A declaration(s)/affidavit(s) under **37 CFR 1.130(b)** was/were filed on_____.
2. ☐ An election was made by the applicant in response to a restriction requirement set forth during the interview on _____; the restriction requirement and election have been incorporated into this action.
3. ☒ The allowed claim(s) is/are *1-27*. As a result of the allowed claim(s), you may be eligible to benefit from the **Patent Prosecution Highway** program at a participating intellectual property office for the corresponding application. For more information, please see http://www.uspto.gov/patents/init_events/pph/index.jsp or send an inquiry to PPHfeedback@uspto.gov .
4. ☐ Acknowledgment is made of a claim for foreign priority under 35 U.S.C. § 119(a)-(d) or (f).

   Certified copies:

   a) ☐ All b) ☐ Some *c) ☐ None of the:
   1. ☐ Certified copies of the priority documents have been received.
   2. ☐ Certified copies of the priority documents have been received in Application No. _____ .
   3. ☐ Copies of the certified copies of the priority documents have been received in this national stage application from the International Bureau (PCT Rule 17.2(a)).

   * Certified copies not received: _____.

Applicant has THREE MONTHS FROM THE "MAILING DATE" of this communication to file a reply complying with the requirements noted below. Failure to timely comply will result in ABANDONMENT of this application.
THIS THREE-MONTH PERIOD IS NOT EXTENDABLE.

5. ☐ CORRECTED DRAWINGS (as "replacement sheets") must be submitted.
   ☐ including changes required by the attached Examiner's Amendment / Comment or in the Office action of Paper No./Mail Date _____.

   Identifying indicia such as the application number (see 37 CFR 1.84(c)) should be written on the drawings in the front (not the back) of each sheet. Replacement sheet(s) should be labeled as such in the header according to 37 CFR 1.121(d).
6. ☐ DEPOSIT OF and/or INFORMATION about the deposit of BIOLOGICAL MATERIAL must be submitted. Note the attached Examiner's comment regarding REQUIREMENT FOR THE DEPOSIT OF BIOLOGICAL MATERIAL.

Attachment(s)

1. ☐ Notice of References Cited (PTO-892)
2. ☒ Information Disclosure Statements (PTO/SB/08), Paper No./Mail Date _____
3. ☐ Examiner's Comment Regarding Requirement for Deposit of Biological Material
4. ☐ Interview Summary (PTO-413), Paper No./Mail Date _____ .
5. ☐ Examiner's Amendment/Comment
6. ☒ Examiner's Statement of Reasons for Allowance
7. ☐ Other _____.

DETAILED ACTION

The present application is being examined under the pre-AIA first to invent provisions.

Continued Examination Under 37 CFR 1.114

A request for continued examination under 37 CFR 1.114, including the fee set forth in 37 CFR 1.17(e), was filed in this application after allowance or after an Office action under *Ex Parte Quayle*, 25 USPQ 74, 453 O.G. 213 (Comm'r Pat. 1935). Since this application is eligible for continued examination under 37 CFR 1.114, and the fee set forth in 37 CFR 1.17(e) has been timely paid, prosecution in this application has been reopened pursuant to 37 CFR 1.114. Applicant's submission filed on 26 February 2015 has been entered.

Information Disclosure Statement

The Information Disclosure Statement filed with the RCE is made of record.

Allowable Subject Matter

Claims 1-27 are allowed. The prior art made of record does not teach the claimed subject matter. Also, reference the applicant's Remarks filed 23 October 2014 for reasons for allowance.

Conclusion

Any inquiry concerning this communication or earlier communications from the examiner should be directed to BLANE J. JACKSON whose telephone number is (571)272-7890. The examiner can normally be reached on Monday through Friday, 8:30 AM-5:30 PM, EST.

If attempts to reach the examiner by telephone are unsuccessful, the examiner's supervisor, Edward Urban can be reached on (571) 272-7899. The fax phone number for the organization where this application or proceeding is assigned is 571-273-8300.

Information regarding the status of an application may be obtained from the Patent Application Information Retrieval (PAIR) system. Status information for published applications may be obtained from either Private PAIR or Public PAIR. Status information for unpublished applications is available through Private PAIR only. For more information about the PAIR system, see http://pair-direct.uspto.gov. Should you have questions on access to the Private PAIR system, contact the Electronic Business Center (EBC) at 866-217-9197 (toll-free). If you would like assistance from a USPTO Customer Service Representative or access to the automated information system, call 800-786-9199 (IN USA OR CANADA) or 571-272-1000.

/BLANE J JACKSON/
Primary Examiner, Art Unit 2649

Doc code: IDS
Doc description: Information Disclosure Statement (IDS) Field

PTO/SB/08a (01-10)
Approved for use through 07/31/2012. OMB 0651-0031
U.S. Patent and Trademark Office; U.S. DEPARTMENT OF COMMERCE

Under the Paperwork Reduction Act of 1995, no persons are required to respond to a collection of information unless it contains a valid OMB control number.

INFORMATION DISCLOSURE STATEMENT BY APPLICANT (Not for submission under 37 CFR 1.99)		
	Application Number	13/962,871
	Filing Date	August 8, 2013
	First Named Inventor	Madhukar Reddy
	Art Unit	2649
	Examiner Name	Blane J. Jackson
	Attorney Docket Number	89194-002720US-883946

ALL REFERENCES CONSIDERED EXCEPT WHERE LINED THROUGH. /B.J./

U.S. PATENTS

Examiner Initial*	Cite No	Patent Number	Kind Code[1]	Issue Date	Name of Patentee or Applicant of cited Document	Pages, Columns, Lines, Where Relevant Passages or Relevant Figures Appear
	1.	US8,892,225	B2	11-18-2014	Walsh et al.	

U.S. PATENT APPLICATION PUBLICATIONS

Examiner Initial*	Cite No	Publication Number	Kind Code[1]	Publication Date	Name of Patentee or Applicant of cited Document	Pages, Columns, Lines, Where Relevant Passages or Relevant Figures Appear
	1.	US2004/0110522	A1	06-10-2004	Reddy et al.	
	2.	US2005/0286562	A1	12-29-2005	Nakao et al.	
	3.	US2011/0105068	A1	05-05-2011	Reddy et al.	

FOREIGN PATENT DOCUMENTS

Examiner Initial*	Cite No	Foreign Document Number[3]	Country Code[2]	Kind Code[4]	Publication Date	Name of Patentee or Applicant of cited Document	Pages, Columns, Lines where Relevant Passages or Relevant Figures Appear	T[5]

NON-PATENT LITERATURE DOCUMENTS

Examiner Initials*	Cite No	Include name of the author (in CAPITAL LETTERS), title of the article (when appropriate), title of the item (book, magazine, journal, serial, symposium, catalog, etc.), date, page(s), volume-issue number(s), publisher, city and/or country where published.	T[5]
/B.J./	1.	International Search Report and Written Opinion for International Patent Application No. PCT/2010/031631, mailed June 17, 2010, 8 pages.	
/B.J./	2.	International Search Report and Written Opinion for International Patent Application No. PCT/2010/031627, mailed June 18, 2010, 7 pages.	
/B.J./	3.	International Preliminary Report on Patentability for International Patent Application No. PCT/2010/031631, mailed October 27, 2011, 7 pages.	

Under the Paperwork Reduction Act of 1995, no persons are required to respond to a collection of information unless it contains a valid OMB control number.

INFORMATION DISCLOSURE STATEMENT BY APPLICANT (Not for submission under 37 CFR 1.99)		
	Application Number	13/962,871
	Filing Date	August 8, 2013
	First Named Inventor	Madhukar Reddy
	Art Unit	2649
	Examiner Name	Blane J. Jackson
	Attorney Docket Number	89194-002720US-883946

/B.J./	4.	International Preliminary Report on Patentability for International Patent Application No. PCT/2010/031627, mailed October 27, 2011, 6 pages.	
/B.J./	5.	Non-Final Office Action for U.S. Patent Application No. 12/762,900, mailed August 30, 2012, 9 pages.	
/B.J./	6.	Notice of Allowance for U.S. Patent Application No. 12/762,900, mailed May 6, 2013, 9 pages.	
/B.J./	7.	Non-Final Office for U.S. Patent Application No. 12/762,950, mailed February 11, 2013, 35 pages.	
/B.J./	8.	Final Office Action for U.S. Patent Application No. 12/762,950, mailed September 5, 2013, 37 pages.	
/B.J./	9.	Non-Final Office for U.S. Patent Application No. 12/762,950, mailed March 21, 2014, 19 pages.	
/B.J./	10.	Notice of Allowance for U.S. Patent Application No. 12/762,950, mailed October 7, 2014, 7 pages.	

EXAMINER SIGNATURE

Doc code: IDS
Doc description: Information Disclosure Statement (IDS) Field

PTO/SB/08a (01-10)
Approved for use through 07/31/2012. OMB 0651-0031
U.S. Patent and Trademark Office; U.S. DEPARTMENT OF COMMERCE

Under the Paperwork Reduction Act of 1995, no persons are required to respond to a collection of information unless it contains a valid OMB control number.

INFORMATION DISCLOSURE STATEMENT BY APPLICANT (Not for submission under 37 CFR 1.99)		
	Application Number	13/962,871
	Filing Date	August 8, 2013
	First Named Inventor	Madhukar Reddy
	Art Unit	2649
	Examiner Name	Blane J. Jackson
	Attorney Docket Number	89194-002720US-883946

Examiner Signature	/Blane Jackson/	Date Considered	03/17/2015

*EXAMINER: Initial if reference considered, whether or not citation is in conformance with MPEP 609. Draw line through a citation if not in conformance and not considered. Include copy of this form with next communication to applicant.

[1] See Kind Codes of USPTO Patent Documents at www.USPTO.GOV or MPEP 901.04. [2] Enter office that issued the document, by the two-letter code (WIPO Standard ST.3). [3] For Japanese patent documents, the indication of the year of the reign of the Emperor must precede the serial number of the patent document.
[4] Kind of document by the appropriate symbols as indicated on the document under WIPO Standard ST.16 if possible. [5] Applicant is to place a check mark here if English language translation is attached.

CERTIFICATION STATEMENT

Please see 37 CFR 1.97 and 1.98 to make the appropriate selection(s):

☐ That each item of information contained in the information disclosure statement was first cited in any communication from a foreign patent office in a counterpart foreign application not more than three months prior to the filing of the information disclosure statement. See 37 CFR 1.97(e) (1).

OR

☐ That no item of information contained in the information disclosure statement was cited in a communication from a foreign patent office in a counterpart foreign application, and, to the knowledge of the person signing the certification after making reasonable inquiry, no item of information contained in the information disclosure statement was known to any individual designated in 37 CFR 1.56(c) more than three months prior to the filing of the information disclosure statement. See 37 CFR 1.97(e) (2).

☐ See attached certification statement.

☐ Fee set forth in 37 CFR 1.17 (p) has been submitted herewith.

☒ A certification statement is not submitted herewith.

SIGNATURE

A signature of the applicant or representative is required in accordance with CFR 1.33, 10.18. Please see CFR 1.4(d) for the form of the signature.

Signature	/Ardeshir Tabibi/	Date (YYYY-MM-DD)	February 25, 2015
Name/Print	Ardeshir Tabibi	Registration Number	48,750

This collection of information is required by 37 CFR 1.97 and 1.98. The information is required to obtain or retain a benefit by the public which is to file (and by the USPTO to process) an application. Confidentiality is governed by 35 U.S.C. 122 and 37 CFR 1.14. This collection is estimated to take 1 hour to complete, including gathering, preparing and submitting the completed

Doc code: IDS
Doc description: Information Disclosure Statement (IDS) Field

PTO/SB/08a (01-10)
Approved for use through 07/31/2012. OMB 0651-0031
U.S. Patent and Trademark Office; U.S. DEPARTMENT OF COMMERCE

Under the Paperwork Reduction Act of 1995, no persons are required to respond to a collection of information unless it contains a valid OMB control number.

INFORMATION DISCLOSURE STATEMENT BY APPLICANT (Not for submission under 37 CFR 1.99)		
	Application Number	13/962,871
	Filing Date	August 8, 2013
	First Named Inventor	Madhukar Reddy
	Art Unit	2649
	Examiner Name	Blane J. Jackson
	Attorney Docket Number	89194-002720US-883946

application form to the USPTO. Time will vary depending upon the individual case. Any comments on the amount of time you require to complete this form and/or suggestions for reducing this burden, should be sent to the Chief Information Officer, U.S. Patent and Trademark Office, U.S. Department of Commerce, P.O. Box 1450, Alexandria, VA 22313-1450. DO NOT SEND FEES OR COMPLETED FORMS TO THIS ADDRESS. **SEND TO: Commissioner for Patents, P.O. Box 1450, Alexandria, VA 22313-1450.**

EAST Search History

EAST Search History (Prior Art)

Ref #	Hits	Search Query	DBs	Default Operator	Plurals	Time Stamp
L1	2	"8892225".pn.	US-PGPUB; USPAT; USOCR; FPRS; EPO; JPO; DERWENT; IBM_TDB	OR	ON	2015/03/17 10:08
L2	3	"20040110522".pn.	US-PGPUB; USPAT; USOCR; FPRS; EPO; JPO; DERWENT; IBM_TDB	OR	ON	2015/03/17 10:37
L3	3	"20050286562"	US-PGPUB; USPAT; USOCR; FPRS; EPO; JPO; DERWENT; IBM_TDB	OR	ON	2015/03/17 10:39
L4	5	"20110105068"	US-PGPUB; USPAT; USOCR; FPRS; EPO; JPO; DERWENT; IBM_TDB	OR	ON	2015/03/17 10:40
L5	11	"20070032220"	US-PGPUB; USPAT; USOCR; FPRS; EPO; JPO; DERWENT; IBM_TDB	OR	ON	2015/03/17 10:59
L8	35	Reddy-Madhukar.in.	US-PGPUB; USPAT; USOCR; FPRS; EPO; JPO; DERWENT; IBM_TDB	OR	ON	2015/03/17 11:07

3/17/2015 11:09:10 AM

Issue Classification	Application/Control No.	Applicant(s)/Patent Under Reexamination
	13962871	REDDY ET AL.
	Examiner	**Art Unit**
	BLANE J JACKSON	2649

CPC

Symbol					Type	Version
H04N		5	/	50	F	2013-01-01
H04B		1	/	0014	I	2013-01-01
H04N		21	/	4263	I	2013-01-01
H04N		21	/	4383	I	2013-01-01
H04N		21	/	454	I	2013-01-01
			/			
			/			
			/			
			/			
			/			
			/			
			/			
			/			
			/			
			/			

CPC Combination Sets

Symbol					Type	Set	Ranking	Version
			/					
			/					

NONE (Assistant Examiner)	(Date)	**Total Claims Allowed:** 21	
/BLANE J JACKSON/ Primary Examiner.Art Unit 2649 (Primary Examiner)	03/19/15 (Date)	O.G. Print Claim(s) 1	O.G. Print Figure 4

Issue Classification	Application/Control No.	Applicant(s)/Patent Under Reexamination
	13962871	REDDY ET AL.
	Examiner	**Art Unit**
	BLANE J JACKSON	2649

US ORIGINAL CLASSIFICATION		INTERNATIONAL CLASSIFICATION										
CLASS	SUBCLASS	CLAIMED					NON-CLAIMED					
455	207	H	0	4	B	1 / 0071						
CROSS REFERENCE(S)		H	0	4	B	1 / 16 (2006.01.01)						
CLASS	SUBCLASS (ONE SUBCLASS PER BLOCK)											
455	214											

NONE (Assistant Examiner) (Date)		Total Claims Allowed: 21	
/BLANE J JACKSON/ Primary Examiner.Art Unit 2649 (Primary Examiner)	03/19/15 (Date)	O.G. Print Claim(s) 1	O.G. Print Figure 4

Issue Classification	Application/Control No.	Applicant(s)/Patent Under Reexamination
	13962871	REDDY ET AL.
	Examiner	**Art Unit**
	BLANE J JACKSON	2649

☐ Claims renumbered in the same order as presented by applicant ☐ CPA ☐ T.D. ☐ R.1.47

Final	Original	Final	Original	Final	Original	Final	Original	Final	Original	Final	Original	Final	Original	Final	Original
1	1	17	17												
2	2	18	18												
3	3	19	19												
4	4	20	20												
5	5	21	21												
6	6														
7	7														
8	8														
9	9														
10	10														
11	11														
12	12														
13	13														
14	14														
15	15														
16	16														

NONE (Assistant Examiner)	(Date)	**Total Claims Allowed:** 21	
/BLANE J JACKSON/ Primary Examiner.Art Unit 2649 (Primary Examiner)	03/19/15 (Date)	O.G. Print Claim(s) 1	O.G. Print Figure 4

Search Notes	Application/Control No.	Applicant(s)/Patent Under Reexamination
	13962871	REDDY ET AL.
	Examiner	**Art Unit**
	BLANE J JACKSON	2649

CPC- SEARCHED

Symbol	Date	Examiner

CPC COMBINATION SETS - SEARCHED

Symbol	Date	Examiner
H04B 1/16, 1/005, 1/0071	06/23/14	BJJ

US CLASSIFICATION SEARCHED

Class	Subclass	Date	Examiner
455	132, 140, 179.1, 180.1, 188.1, 189.1,207, 214,313, 315, 323, 324,324, 325, 334	06/23/14	BJJ

SEARCH NOTES

Search Notes	Date	Examiner
Search of East database; review of parent IDS and prior art to DP	06/23/14	BJJ
Review of TD and parent to issue	11/19/14	BJJ

INTERFERENCE SEARCH

US Class/ CPC Symbol	US Subclass / CPC Group	Date	Examiner
	no interference listed class/ subclass or symbol/ group	11/19/14	BJJ

Doc code: IDS
Doc description: Information Disclosure Statement (IDS) Field

PTO/SB/08a (01-10)
Approved for use through 07/31/2012. OMB 0651-0031
U.S. Patent and Trademark Office; U.S. DEPARTMENT OF COMMERCE

Under the Paperwork Reduction Act of 1995, no persons are required to respond to a collection of information unless it contains a valid OMB control number.

INFORMATION DISCLOSURE STATEMENT BY APPLICANT (Not for submission under 37 CFR 1.99)		
	Application Number	13/962,871
	Filing Date	August 8, 2013
	First Named Inventor	Madhukar Reddy
	Art Unit	2649
	Examiner Name	Blane J. Jackson
	Attorney Docket Number	89194-002720US-883946

ALL REFERENCES CONSIDERED EXCEPT WHERE LINED THROUGH. /B.J./

U.S. PATENTS

Examiner Initial*	Cite No	Patent Number	Kind Code[1]	Issue Date	Name of Patentee or Applicant of cited Document	Pages, Columns, Lines, Where Relevant Passages or Relevant Figures Appear
	1.	US8,892,225	B2	11-18-2014	Walsh et al.	

U.S. PATENT APPLICATION PUBLICATIONS

Examiner Initial*	Cite No	Publication Number	Kind Code[1]	Publication Date	Name of Patentee or Applicant of cited Document	Pages, Columns, Lines, Where Relevant Passages or Relevant Figures Appear
	1.	US2004/0110522	A1	06-10-2004	Reddy et al.	
	2.	US2005/0286562	A1	12-29-2005	Nakao et al.	
	3.	US2011/0105068	A1	05-05-2011	Reddy et al.	

FOREIGN PATENT DOCUMENTS

Examiner Initial*	Cite No	Foreign Document Number[3]	Country Code[2]	Kind Code[4]	Publication Date	Name of Patentee or Applicant of cited Document	Pages, Columns, Lines where Relevant Passages or Relevant Figures Appear	T[5]

NON-PATENT LITERATURE DOCUMENTS

Examiner Initials*	Cite No	Include name of the author (in CAPITAL LETTERS), title of the article (when appropriate), title of the item (book, magazine, journal, serial, symposium, catalog, etc.), date, page(s), volume-issue number(s), publisher, city and/or country where published.	T[5]
/B.J./	1.	International Search Report and Written Opinion for International Patent Application No. PCT/2010/031631, mailed June 17, 2010, 8 pages.	
/B.J./	2.	International Search Report and Written Opinion for International Patent Application No. PCT/2010/031627, mailed June 18, 2010, 7 pages.	
/B.J./	3.	International Preliminary Report on Patentability for International Patent Application No. PCT/2010/031631, mailed October 27, 2011, 7 pages.	

Under the Paperwork Reduction Act of 1995, no persons are required to respond to a collection of information unless it contains a valid OMB control number.

INFORMATION DISCLOSURE STATEMENT BY APPLICANT (Not for submission under 37 CFR 1.99)		
	Application Number	13/962,871
	Filing Date	August 8, 2013
	First Named Inventor	Madhukar Reddy
	Art Unit	2649
	Examiner Name	Blane J. Jackson
	Attorney Docket Number	89194-002720US-883946

/B.J./	4.	International Preliminary Report on Patentability for International Patent Application No. PCT/2010/031627, mailed October 27, 2011, 6 pages.	
/B.J./	5.	Non-Final Office Action for U.S. Patent Application No. 12/762,900, mailed August 30, 2012, 9 pages.	
/B.J./	6.	Notice of Allowance for U.S. Patent Application No. 12/762,900, mailed May 6, 2013, 9 pages.	
/B.J./	7.	Non-Final Office for U.S. Patent Application No. 12/762,950, mailed February 11, 2013, 35 pages.	
/B.J./	8.	Final Office Action for U.S. Patent Application No. 12/762,950, mailed September 5, 2013, 37 pages.	
/B.J./	9.	Non-Final Office for U.S. Patent Application No. 12/762,950, mailed March 21, 2014, 19 pages.	
/B.J./	10.	Notice of Allowance for U.S. Patent Application No. 12/762,950, mailed October 7, 2014, 7 pages.	

EXAMINER SIGNATURE

Doc code: IDS
Doc description: Information Disclosure Statement (IDS) Field

PTO/SB/08a (01-10)
Approved for use through 07/31/2012. OMB 0651-0031
U.S. Patent and Trademark Office; U.S. DEPARTMENT OF COMMERCE

Under the Paperwork Reduction Act of 1995, no persons are required to respond to a collection of information unless it contains a valid OMB control number.

INFORMATION DISCLOSURE STATEMENT BY APPLICANT (Not for submission under 37 CFR 1.99)		
	Application Number	13/962,871
	Filing Date	August 8, 2013
	First Named Inventor	Madhukar Reddy
	Art Unit	2649
	Examiner Name	Blane J. Jackson
	Attorney Docket Number	89194-002720US-883946

Examiner Signature	/Blane Jackson/	Date Considered 03/17/2015	

*EXAMINER: Initial if reference considered, whether or not citation is in conformance with MPEP 609. Draw line through a citation if not in conformance and not considered. Include copy of this form with next communication to applicant.

[1] See Kind Codes of USPTO Patent Documents at www.USPTO.GOV or MPEP 901.04. [2] Enter office that issued the document, by the two-letter code (WIPO Standard ST.3). [3] For Japanese patent documents, the indication of the year of the reign of the Emperor must precede the serial number of the patent document.
[4] Kind of document by the appropriate symbols as indicated on the document under WIPO Standard ST.16 if possible. [5] Applicant is to place a check mark here if English language translation is attached.

CERTIFICATION STATEMENT

Please see 37 CFR 1.97 and 1.98 to make the appropriate selection(s):

☐ That each item of information contained in the information disclosure statement was first cited in any communication from a foreign patent office in a counterpart foreign application not more than three months prior to the filing of the information disclosure statement. See 37 CFR 1.97(e) (1).

OR

☐ That no item of information contained in the information disclosure statement was cited in a communication from a foreign patent office in a counterpart foreign application, and, to the knowledge of the person signing the certification after making reasonable inquiry, no item of information contained in the information disclosure statement was known to any individual designated in 37 CFR 1.56(c) more than three months prior to the filing of the information disclosure statement. See 37 CFR 1.97(e) (2).

☐ See attached certification statement.

☐ Fee set forth in 37 CFR 1.17 (p) has been submitted herewith.

☒ A certification statement is not submitted herewith.

SIGNATURE

A signature of the applicant or representative is required in accordance with CFR 1.33, 10.18. Please see CFR 1.4(d) for the form of the signature.

Signature	/Ardeshir Tabibi/	Date (YYYY-MM-DD)	February 25, 2015
Name/Print	Ardeshir Tabibi	Registration Number	48,750

This collection of information is required by 37 CFR 1.97 and 1.98. The information is required to obtain or retain a benefit by the public which is to file (and by the USPTO to process) an application. Confidentiality is governed by 35 U.S.C. 122 and 37 CFR 1.14. This collection is estimated to take 1 hour to complete, including gathering, preparing and submitting the completed

Doc code: IDS
Doc description: Information Disclosure Statement (IDS) Field

PTO/SB/08a (01-10)
Approved for use through 07/31/2012. OMB 0651-0031
U.S. Patent and Trademark Office; U.S. DEPARTMENT OF COMMERCE

Under the Paperwork Reduction Act of 1995, no persons are required to respond to a collection of information unless it contains a valid OMB control number.

INFORMATION DISCLOSURE STATEMENT BY APPLICANT (Not for submission under 37 CFR 1.99)		
	Application Number	13/962,871
	Filing Date	August 8, 2013
	First Named Inventor	Madhukar Reddy
	Art Unit	2649
	Examiner Name	Blane J. Jackson
	Attorney Docket Number	89194-002720US-883946

application form to the USPTO. Time will vary depending upon the individual case. Any comments on the amount of time you require to complete this form and/or suggestions for reducing this burden, should be sent to the Chief Information Officer, U.S. Patent and Trademark Office, U.S. Department of Commerce, P.O. Box 1450, Alexandria, VA 22313-1450. DO NOT SEND FEES OR COMPLETED FORMS TO THIS ADDRESS. **SEND TO: Commissioner for Patents, P.O. Box 1450, Alexandria, VA 22313-1450.**

To: ipefiling@kilpatricktownsend.com,jlhice@kilpatrick.foundationip.com,
From: PAIR_eOfficeAction@uspto.gov
Cc: PAIR_eOfficeAction@uspto.gov
Subject: Private PAIR Correspondence Notification for Customer Number 20350

Mar 27, 2015 05:36:57 AM

Dear PAIR Customer:

KILPATRICK TOWNSEND & STOCKTON LLP
TWO EMBARCADERO CENTER
EIGHTH FLOOR
SAN FRANCISCO, CA 94111-3834
UNITED STATES

The following USPTO patent application(s) associated with your Customer Number, 20350 , have new outgoing correspondence. This correspondence is now available for viewing in Private PAIR.

The official date of notification of the outgoing correspondence will be indicated on the form PTOL-90 accompanying the correspondence.

Disclaimer:
The list of documents shown below is provided as a courtesy and is not part of the official file wrapper. The content of the images shown in PAIR is the official record.

Application	Document	Mailroom Date	Attorney Docket No.
13962871	NOA	03/27/2015	89194-002720US-883946
	1449	03/27/2015	89194-002720US-883946
	1449	03/27/2015	89194-002720US-883946

To view your correspondence online or update your email addresses, please visit us anytime at https://sportal.uspto.gov/secure/myportal/privatepair.

If you have any questions, please email the Electronic Business Center (EBC) at EBC@uspto.gov with 'e-Office Action' on the subject line or call 1-866-217-9197 during the following hours:

Monday - Friday 6:00 a.m. to 12:00 a.m.

Thank you for prompt attention to this notice,

UNITED STATES PATENT AND TRADEMARK OFFICE

PATENT APPLICATION INFORMATION RETRIEVAL SYSTEM

PART B - FEE(S) TRANSMITTAL

Complete and send this form, together with applicable fee(s), to: Mail **Mail Stop ISSUE FEE**
Commissioner for Patents
P.O. Box 1450
Alexandria, Virginia 22313-1450
or Fax (571)-273-2885

INSTRUCTIONS: This form should be used for transmitting the ISSUE FEE and PUBLICATION FEE (if required). Blocks 1 through 5 should be completed where appropriate. All further correspondence including the Patent, advance orders and notification of maintenance fees will be mailed to the current correspondence address as indicated unless corrected below or directed otherwise in Block 1, by (a) specifying a new correspondence address; and/or (b) indicating a separate "FEE ADDRESS" for maintenance fee notifications.

CURRENT CORRESPONDENCE ADDRESS (Note: Use Block 1 for any change of address)

20350 7590 03/27/2015
KILPATRICK TOWNSEND & STOCKTON LLP
TWO EMBARCADERO CENTER
EIGHTH FLOOR
SAN FRANCISCO, CA 94111-3834

Note: A certificate of mailing can only be used for domestic mailings of the Fee(s) Transmittal. This certificate cannot be used for any other accompanying papers. Each additional paper, such as an assignment or formal drawing, must have its own certificate of mailing or transmission.

Certificate of Mailing or Transmission
I hereby certify that this Fee(s) Transmittal is being deposited with the United States Postal Service with sufficient postage for first class mail in an envelope addressed to the Mail Stop ISSUE FEE address above, or being facsimile transmitted to the USPTO (571) 273-2885, on the date indicated below.

(Depositor's name)
(Signature)
(Date)

APPLICATION NO.	FILING DATE	FIRST NAMED INVENTOR	ATTORNEY DOCKET NO.	CONFIRMATION NO.
13/962,871	08/08/2013	Madhukar Reddy	89194-002720US-883946	3953

TITLE OF INVENTION: WIDEBAND TUNER ARCHITECTURE

APPLN. TYPE	ENTITY STATUS	ISSUE FEE DUE	PUBLICATION FEE DUE	PREV. PAID ISSUE FEE	TOTAL FEE(S) DUE	DATE DUE
nonprovisional	SMALL	$480	$0	$0	$480	06/29/2015

EXAMINER	ART UNIT	CLASS-SUBCLASS
JACKSON, BLANE J	2649	455-207000

1. Change of correspondence address or indication of "Fee Address" (37 CFR 1.363).
- ☐ Change of correspondence address (or Change of Correspondence Address form PTO/SB/122) attached.
- ☐ "Fee Address" indication (or "Fee Address" Indication form PTO/SB/47; Rev 03-02 or more recent) attached. **Use of a Customer Number is required.**

2. For printing on the patent front page, list
(1) The names of up to 3 registered patent attorneys or agents OR, alternatively,
(2) The name of a single firm (having as a member a registered attorney or agent) and the names of up to 2 registered patent attorneys or agents. If no name is listed, no name will be printed.

1 Kilpatrick Townsend &
2 Stockton LLP
3 Ardeshir Tabibi

3. ASSIGNEE NAME AND RESIDENCE DATA TO BE PRINTED ON THE PATENT (print or type)

PLEASE NOTE: Unless an assignee is identified below, no assignee data will appear on the patent. If an assignee is identified below, the document has been filed for recordation as set forth in 37 CFR 3.11. Completion of this form is NOT a substitute for filing an assignment.

(A) NAME OF ASSIGNEE: MaxLinear, Inc.
(B) RESIDENCE: (CITY and STATE OR COUNTRY): Carlsbad, CA

Please check the appropriate assignee category or categories (will not be printed on the patent): ☐ Individual ☒ Corporation or other private group entity ☐ Government

4a. The following fee(s) are submitted:
- ☒ Issue Fee
- ☐ Publication Fee (No small entity discount permitted)
- ☐ Advance Order - # of Copies _____

4b. Payment of Fee(s): **(Please first reapply any previously paid issue fee shown above)**
- ☐ A check is enclosed.
- ☐ Payment by credit card. Form PTO-2038 is attached.
- ☒ The director is hereby authorized to charge the required fee(s), any deficiency, or credits any overpayment, to Deposit Account Number 20-1430 (enclose an extra copy of this form).

5. **Change in Entity Status** (from status indicated above)
- ☐ Applicant certifying micro entity status. See 37 CFR 1.29
- ☐ Applicant asserting small entity status. See 37 CFR 1.27
- ☐ Applicant changing to regular undiscounted fee status.

NOTE: Absent a valid certification of Micro Entity Status (see forms PTO/SB/15A and 15B), issue fee payment in the micro entity amount will not be accepted at the risk of application abandonment.

NOTE: If the application was previously under micro entity status, checking this box will be taken to be a notification of loss of entitlement to micro entity status.

NOTE: Checking this box will be taken to be a notification of loss of entitlement to small or micro entity status, as applicable.

NOTE: This form must be signed in accordance with 37 CFR 1.31 and 1.33. See 37 CFR 1.4 for signature requirements and certifications.

Authorized Signature _____ Date June 29, 2015

Typed or printed name Ardeshir Tabibi Registration No. 48,750

PTOL-85 Part B (10-13) Approved for use through 10/31/2013. OMB 0651-0033 U.S. Patent and Trademark Office; U.S. DEPARTMENT OF COMMERCE

Electronic Patent Application Fee Transmittal

Application Number:	13962871
Filing Date:	08-Aug-2013
Title of Invention:	WIDEBAND TUNER ARCHITECTURE
First Named Inventor/Applicant Name:	Madhukar Reddy
Filer:	Ardeshir Tabibi/Yvonne Mock
Attorney Docket Number:	89194-002720US-883946

Filed as Small Entity

Filing Fees for Utility under 35 USC 111(a)

Description	Fee Code	Quantity	Amount	Sub-Total in USD($)
Basic Filing:				
Pages:				
Claims:				
Miscellaneous-Filing:				
Petition:				
Patent-Appeals-and-Interference:				
Post-Allowance-and-Post-Issuance:				
Utility Appl Issue Fee	2501	1	480	480

Description	Fee Code	Quantity	Amount	Sub-Total in USD($)
Extension-of-Time:				
Miscellaneous:				
			Total in USD ($)	**480**

Electronic Acknowledgement Receipt

EFS ID:	22770218
Application Number:	13962871
International Application Number:	
Confirmation Number:	3953
Title of Invention:	WIDEBAND TUNER ARCHITECTURE
First Named Inventor/Applicant Name:	Madhukar Reddy
Customer Number:	20350
Filer:	Ardeshir Tabibi/Yvonne Mock
Filer Authorized By:	Ardeshir Tabibi
Attorney Docket Number:	89194-002720US-883946
Receipt Date:	29-JUN-2015
Filing Date:	08-AUG-2013
Time Stamp:	14:20:48
Application Type:	Utility under 35 USC 111(a)

Payment information:

Submitted with Payment	yes
Payment Type	Credit Card
Payment was successfully received in RAM	$480
RAM confirmation Number	661
Deposit Account	201430
Authorized User	TABIBI, ARDESHIR

The Director of the USPTO is hereby authorized to charge indicated fees and credit any overpayment as follows:

Charge any Additional Fees required under 37 C.F.R. Section 1.19 (Document supply fees)

Charge any Additional Fees required under 37 C.F.R. Section 1.20 (Post Issuance fees)

Charge any Additional Fees required under 37 C.F.R. Section 1.21 (Miscellaneous fees and charges)

File Listing:

Document Number	Document Description	File Name	File Size(Bytes)/ Message Digest	Multi Part /.zip	Pages (if appl.)
1	Issue Fee Payment (PTO-85B)	ISSUEFEE_89194-002720US-883946.pdf	104788 04b43092d1d1c3dec9b7d5e5ec785927de3e81b6	no	1
Warnings:					
Information:					
2	Fee Worksheet (SB06)	fee-info.pdf	30694 2f64177c47617f617b4ca2e165aa7dfb95e18229	no	2
Warnings:					
Information:					
		Total Files Size (in bytes):	135482		

This Acknowledgement Receipt evidences receipt on the noted date by the USPTO of the indicated documents, characterized by the applicant, and including page counts, where applicable. It serves as evidence of receipt similar to a Post Card, as described in MPEP 503.

<u>New Applications Under 35 U.S.C. 111</u>
If a new application is being filed and the application includes the necessary components for a filing date (see 37 CFR 1.53(b)-(d) and MPEP 506), a Filing Receipt (37 CFR 1.54) will be issued in due course and the date shown on this Acknowledgement Receipt will establish the filing date of the application.

<u>National Stage of an International Application under 35 U.S.C. 371</u>
If a timely submission to enter the national stage of an international application is compliant with the conditions of 35 U.S.C. 371 and other applicable requirements a Form PCT/DO/EO/903 indicating acceptance of the application as a national stage submission under 35 U.S.C. 371 will be issued in addition to the Filing Receipt, in due course.

<u>New International Application Filed with the USPTO as a Receiving Office</u>
If a new international application is being filed and the international application includes the necessary components for an international filing date (see PCT Article 11 and MPEP 1810), a Notification of the International Application Number and of the International Filing Date (Form PCT/RO/105) will be issued in due course, subject to prescriptions concerning national security, and the date shown on this Acknowledgement Receipt will establish the international filing date of the application.

Doc code: IDS
Doc description: Information Disclosure Statement (IDS) Field

PTO/SB/08a (01-10)
Approved for use through 07/31/2012. OMB 0651-0031
U.S. Patent and Trademark Office; U.S. DEPARTMENT OF COMMERCE

Under the Paperwork Reduction Act of 1995, no persons are required to respond to a collection of information unless it contains a valid OMB control number.

INFORMATION DISCLOSURE STATEMENT BY APPLICANT (Not for submission under 37 CFR 1.99)		
	Application Number	13/962,871
	Filing Date	August 8, 2013
	First Named Inventor	Madhukar Reddy
	Art Unit	2649
	Examiner Name	Blane J. Jackson
	Attorney Docket Number	89194-002720US-883946

ALL REFERENCES CONSIDERED EXCEPT WHERE LINED THROUGH. /B.J./

U.S. PATENTS

Examiner Initial*	Cite No	Patent Number	Kind Code[1]	Issue Date	Name of Patentee or Applicant of cited Document	Pages, Columns, Lines, Where Relevant Passages or Relevant Figures Appear
	1.	US8,892,225	B2	11-18-2014	Walsh et al.	

U.S. PATENT APPLICATION PUBLICATIONS

Change(s) applied to document, /T.W./ 7/10/2015

Examiner Initial*	Cite No	Publication Number	Kind Code[1]	Publication Date	Name of Patentee or Applicant of cited Document	Pages, Columns, Lines, Where Relevant Passages or Relevant Figures Appear
	1.	US2004/0110522	A1	06-10-2004	~~Reddy~~ et al. Howard	
	2.	US2005/0286562	A1	12-29-2005	Nakao et al.	
	3.	US2011/0105068	A1	05-05-2011	Reddy et al.	

FOREIGN PATENT DOCUMENTS

Examiner Initial*	Cite No	Foreign Document Number[3]	Country Code[2]	Kind Code[4]	Publication Date	Name of Patentee or Applicant of cited Document	Pages, Columns, Lines where Relevant Passages or Relevant Figures Appear	T[5]

NON-PATENT LITERATURE DOCUMENTS

Examiner Initials*	Cite No	Include name of the author (in CAPITAL LETTERS), title of the article (when appropriate), title of the item (book, magazine, journal, serial, symposium, catalog, etc.), date, page(s), volume-issue number(s), publisher, city and/or country where published.	T[5]
/B.J./	1.	International Search Report and Written Opinion for International Patent Application No. PCT/2010/031631, mailed June 17, 2010, 8 pages.	
/B.J./	2.	International Search Report and Written Opinion for International Patent Application No. PCT/2010/031627, mailed June 18, 2010, 7 pages.	
/B.J./	3.	International Preliminary Report on Patentability for International Patent Application No. PCT/2010/031631, mailed October 27, 2011, 7 pages.	

UNITED STATES PATENT AND TRADEMARK OFFICE

UNITED STATES DEPARTMENT OF COMMERCE
United States Patent and Trademark Office
Address: COMMISSIONER FOR PATENTS
P.O. Box 1450
Alexandria, Virginia 22313-1450
www.uspto.gov

APPLICATION NO.	ISSUE DATE	PATENT NO.	ATTORNEY DOCKET NO.	CONFIRMATION NO.
13/962,871	08/04/2015	9100622	89194-002720US-883946	3953

20350 7590 07/15/2015
KILPATRICK TOWNSEND & STOCKTON LLP
TWO EMBARCADERO CENTER
EIGHTH FLOOR
SAN FRANCISCO, CA 94111-3834

ISSUE NOTIFICATION

The projected patent number and issue date are specified above.

Determination of Patent Term Adjustment under 35 U.S.C. 154 (b)
(application filed on or after May 29, 2000)

The Patent Term Adjustment is 0 day(s). Any patent to issue from the above-identified application will include an indication of the adjustment on the front page.

If a Continued Prosecution Application (CPA) was filed in the above-identified application, the filing date that determines Patent Term Adjustment is the filing date of the most recent CPA.

Applicant will be able to obtain more detailed information by accessing the Patent Application Information Retrieval (PAIR) WEB site (http://pair.uspto.gov).

Any questions regarding the Patent Term Extension or Adjustment determination should be directed to the Office of Patent Legal Administration at (571)-272-7702. Questions relating to issue and publication fee payments should be directed to the Application Assistance Unit (AAU) of the Office of Data Management (ODM) at (571)-272-4200.

APPLICANT(s) (Please see PAIR WEB site http://pair.uspto.gov for additional applicants):

MAXLINEAR, INC., Carlsbad, CA;
Madhukar Reddy, Carlsbad, CA;
Curtis Ling, Carlsbad, CA;
Tim Gallagher, Carlsbad, CA;

The United States represents the largest, most dynamic marketplace in the world and is an unparalleled location for business investment, innovation, and commercialization of new technologies. The USA offers tremendous resources and advantages for those who invest and manufacture goods here. Through SelectUSA, our nation works to encourage and facilitate business investment. To learn more about why the USA is the best country in the world to develop technology, manufacture products, and grow your business, visit SelectUSA.gov.

To: ipefiling@kilpatricktownsend.com,jlhice@kilpatrick.foundationip.com,
From: PAIR_eOfficeAction@uspto.gov
Cc: PAIR_eOfficeAction@uspto.gov
Subject: Private PAIR Correspondence Notification for Customer Number 20350

Jul 16, 2015 05:30:57 AM

Dear PAIR Customer:

KILPATRICK TOWNSEND & STOCKTON LLP
TWO EMBARCADERO CENTER
EIGHTH FLOOR
SAN FRANCISCO, CA 94111-3834
UNITED STATES

The following USPTO patent application(s) associated with your Customer Number, 20350 , have new outgoing correspondence. This correspondence is now available for viewing in Private PAIR.

The official date of notification of the outgoing correspondence will be indicated on the form PTOL-90 accompanying the correspondence.

Disclaimer:
The list of documents shown below is provided as a courtesy and is not part of the official file wrapper. The content of the images shown in PAIR is the official record.

Application	Document	Mailroom Date	Attorney Docket No.
13962871	ISSUE.NTF	07/15/2015	89194-002720US-883946

To view your correspondence online or update your email addresses, please visit us anytime at https://sportal.uspto.gov/secure/myportal/privatepair.

If you have any questions, please email the Electronic Business Center (EBC) at EBC@uspto.gov with 'e-Office Action' on the subject line or call 1-866-217-9197 during the following hours:

Monday - Friday 6:00 a.m. to 12:00 a.m.

Thank you for prompt attention to this notice,

UNITED STATES PATENT AND TRADEMARK OFFICE

PATENT APPLICATION INFORMATION RETRIEVAL SYSTEM

UNITED STATES PATENT AND TRADEMARK OFFICE

UNITED STATES DEPARTMENT OF COMMERCE
United States Patent and Trademark Office
Address: COMMISSIONER FOR PATENTS
P.O. Box 1450
Alexandria, Virginia 22313-1450
www.uspto.gov

APPLICATION NUMBER	FILING OR 371(C) DATE	FIRST NAMED APPLICANT	ATTY.DOCKET NO./TITLE	REQUEST ID
13/962,871	08/08/2013	Madhukar Reddy	89194-002720US-883946	23455

Acknowledgement of Loss of Entitlement to Entity Status Discount

The entity status change request below filed through Private PAIR on 08/18/2016 has been accepted.

CERTIFICATIONS:

Change of Entity Status:

X Applicant changing to regular undiscounted fee status.
NOTE: Checking this box will be taken to be notification of loss of entitlement to small or micro entity status, as applicable.

This portion must be completed by the signatory or signatories making the entity status change in accordance with 37 CFR 1.4(d)(4).

Signature:	/Craig C. Largent/
Name:	Craig C. Largent
Registration Number:	56400

PTO/AIA/80 (07-17)
Approved for use through 03/31/2021. OMB 0651-0035
U.S. Patent and Trademark Office; U.S. DEPARTMENT OF COMMERCE
Under the Paperwork Reduction Act of 1995, no person is required to respond to a collection of information unless it displays a valid OMB control number

POWER OF ATTORNEY TO PROSECUTE APPLICATIONS BEFORE THE USPTO

I hereby revoke all previous powers of attorney given in the application identified in the attached statement under 37 CFR 3.73(c).

I hereby appoint:

[X] Practitioners associated with Customer Number: 23,446

OR

[ ] Practitioner(s) named below (if more than ten patent practitioners are to be named, then a customer number must be used):

Name	Registration Number	Name	Registration Number

As attorney(s) or agent(s) to represent the undersigned before the United States Patent and Trademark Office (USPTO) in connection with any and all patent applications assigned only to the undersigned according to the USPTO assignment records or assignment documents attached to this form in accordance with 37 CFR 3.73(c).

Please change the correspondence address for the application identified in the attached statement under 37 CFR 3.73(c) to:

[X] The address associated with Customer Number: 23,446

OR

[ ]

Firm or individual name		
Address		
City	State	Zip
Country		
Telephone	Email	

Assignee name and address: ENTROPIC COMMUNICATIONS, LLC
1345 AVENUE OF THE AMERICAS, 46TH FLOOR
NEW YORK, NY 10105

A copy of this form, together with a statement under 37 CFR 3.73(c) (Form PTO/AIA/96 or equivalent) is required to be filed in each application in which this form is used. The statement under 37 CFR 3.73(c) may be completed by one of the practitioners appointed in this form, and must identify the application in which this Power of Attorney is to be filed.

SIGNATURE of Assignee of Record

The individual whose signature and title is supplied below is authorized to act on behalf of the assignee.

Signature /Andrea L. Gothing/	Date 2021-05-04
Name Andrea L. Gothing	Telephone 415-830-0613
Title Licensing Officer and Authorized Signatory, Entropic Communications, LLC	

This collection of information is required by 37 CFR 1.31, 1.32, and 1.33. The information is required to obtain or retain a benefit by the public, which is to update (and by the USPTO to process) the file of a patent or reexamination proceeding. Confidentiality is governed by 35 U.S.C. 122 and 37 CFR 1.11 and 1.14. This collection is estimated to take 18 minutes to complete, including gathering, preparing, and submitting the completed application form to the USPTO. Time will vary depending upon the individual case. Any comments on the amount of time you require to complete this form and/or suggestions for reducing this burden, should be sent to the Chief Information Officer, U.S. Patent and Trademark Office, U.S. Department of Commerce, P.O. Box 1450, Alexandria, VA 22313-1450. DO NOT SEND FEES OR COMPLETED FORMS TO THIS ADDRESS. **SEND TO: Commissioner for Patents, P.O. Box 1450, Alexandria, VA 22313-1450.**
If you need assistance in completing the form, call 1-800-PTO-9199 and select option 2.

Privacy Act Statement

The **Privacy Act of 1974 (P.L. 93-579)** requires that you be given certain information in connection with your submission of the attached form related to a patent application or patent. Accordingly, pursuant to the requirements of the Act, please be advised that: (1) the general authority for the collection of this information is 35 U.S.C. 2(b)(2); (2) furnishing of the information solicited is voluntary; and (3) the principal purpose for which the information is used by the U.S. Patent and Trademark Office is to process and/or examine your submission related to a patent application or patent. If you do not furnish the requested information, the U.S. Patent and Trademark Office may not be able to process and/or examine your submission, which may result in termination of proceedings or abandonment of the application or expiration of the patent.

The information provided by you in this form will be subject to the following routine uses:

1. The information on this form will be treated confidentially to the extent allowed under the Freedom of Information Act (5 U.S.C. 552) and the Privacy Act (5 U.S.C 552a). Records from this system of records may be disclosed to the Department of Justice to determine whether disclosure of these records is required by the Freedom of Information Act.
2. A record from this system of records may be disclosed, as a routine use, in the course of presenting evidence to a court, magistrate, or administrative tribunal, including disclosures to opposing counsel in the course of settlement negotiations.
3. A record in this system of records may be disclosed, as a routine use, to a Member of Congress submitting a request involving an individual, to whom the record pertains, when the individual has requested assistance from the Member with respect to the subject matter of the record.
4. A record in this system of records may be disclosed, as a routine use, to a contractor of the Agency having need for the information in order to perform a contract. Recipients of information shall be required to comply with the requirements of the Privacy Act of 1974, as amended, pursuant to 5 U.S.C. 552a(m).
5. A record related to an International Application filed under the Patent Cooperation Treaty in this system of records may be disclosed, as a routine use, to the International Bureau of the World Intellectual Property Organization, pursuant to the Patent Cooperation Treaty.
6. A record in this system of records may be disclosed, as a routine use, to another federal agency for purposes of National Security review (35 U.S.C. 181) and for review pursuant to the Atomic Energy Act (42 U.S.C. 218(c)).
7. A record from this system of records may be disclosed, as a routine use, to the Administrator, General Services, or his/her designee, during an inspection of records conducted by GSA as part of that agency's responsibility to recommend improvements in records management practices and programs, under authority of 44 U.S.C. 2904 and 2906. Such disclosure shall be made in accordance with the GSA regulations governing inspection of records for this purpose, and any other relevant (*i.e.*, GSA or Commerce) directive. Such disclosure shall not be used to make determinations about individuals.
8. A record from this system of records may be disclosed, as a routine use, to the public after either publication of the application pursuant to 35 U.S.C. 122(b) or issuance of a patent pursuant to 35 U.S.C. 151. Further, a record may be disclosed, subject to the limitations of 37 CFR 1.14, as a routine use, to the public if the record was filed in an application which became abandoned or in which the proceedings were terminated and which application is referenced by either a published application, an application open to public inspection or an issued patent.
9. A record from this system of records may be disclosed, as a routine use, to a Federal, State, or local law enforcement agency, if the USPTO becomes aware of a violation or potential violation of law or regulation.

Electronic Acknowledgement Receipt

EFS ID:	42754989
Application Number:	13962871
International Application Number:	
Confirmation Number:	3953
Title of Invention:	WIDEBAND TUNER ARCHITECTURE
First Named Inventor/Applicant Name:	Madhukar Reddy
Customer Number:	20350
Filer:	Ronald H. Spuhler/Deborah Wilson
Filer Authorized By:	Ronald H. Spuhler
Attorney Docket Number:	89194-002720US-883946
Receipt Date:	18-MAY-2021
Filing Date:	08-AUG-2013
Time Stamp:	16:23:42
Application Type:	Utility under 35 USC 111(a)

Payment information:

Submitted with Payment	no

File Listing:

Document Number	Document Description	File Name	File Size(Bytes)/ Message Digest	Multi Part /.zip	Pages (if appl.)
1	Assignee showing of ownership per 37 CFR 3.73	28427US03_373c_Statement_AIA-96.pdf	120570 c8c497f4321e18768d538dc8961e53b2553c433e	no	3

Warnings:

Information:					
2	Power of Attorney	Entropic-POA_General_Assignee_EntropicCommunications_ALG.pdf	487892 51444e06ae84b241bfc127dc47c5d6c646944dd7	no	2
Warnings:					
Information:					
			Total Files Size (in bytes):	608462	

This Acknowledgement Receipt evidences receipt on the noted date by the USPTO of the indicated documents, characterized by the applicant, and including page counts, where applicable. It serves as evidence of receipt similar to a Post Card, as described in MPEP 503.

New Applications Under 35 U.S.C. 111
If a new application is being filed and the application includes the necessary components for a filing date (see 37 CFR 1.53(b)-(d) and MPEP 506), a Filing Receipt (37 CFR 1.54) will be issued in due course and the date shown on this Acknowledgement Receipt will establish the filing date of the application.
National Stage of an International Application under 35 U.S.C. 371
If a timely submission to enter the national stage of an international application is compliant with the conditions of 35 U.S.C. 371 and other applicable requirements a Form PCT/DO/EO/903 indicating acceptance of the application as a national stage submission under 35 U.S.C. 371 will be issued in addition to the Filing Receipt, in due course.
New International Application Filed with the USPTO as a Receiving Office
If a new international application is being filed and the international application includes the necessary components for an international filing date (see PCT Article 11 and MPEP 1810), a Notification of the International Application Number and of the International Filing Date (Form PCT/RO/105) will be issued in due course, subject to prescriptions concerning national security, and the date shown on this Acknowledgement Receipt will establish the international filing date of the application.

PTO/AIA/96 (08-12)
Approved for use through 01/31/2013. OMB 0651-0031
U.S. Patent and Trademark Office; U.S. DEPARTMENT OF COMMERCE
Under the Paperwork Reduction Act of 1995, no persons are required to respond to a collection of information unless it displays a valid OMB control number.

STATEMENT UNDER 37 CFR 3.73(c)

Applicant/Patent Owner: ENTROPIC COMMUNICATIONS, LLC

Application No./Patent No.: 13/962,871 Filed/Issue Date: 2013-08-08

Titled: WIDEBAND TUNER ARCHITECTURE

ENTROPIC COMMUNICATIONS, LLC, a limited liability company

(Name of Assignee) (Type of Assignee, e.g., corporation, partnership, university, government agency, etc.)

states that, for the patent application/patent identified above, it is (choose **one** of options 1, 2, 3 or 4 below):

1. ☑ The assignee of the entire right, title, and interest.

2. ☐ An assignee of less than the entire right, title, and interest (check applicable box):

☐ The extent (by percentage) of its ownership interest is _____%. Additional Statement(s) by the owners holding the balance of the interest must be submitted to account for 100% of the ownership interest.

☐ There are unspecified percentages of ownership. The other parties, including inventors, who together own the entire right, title and interest are:

Additional Statement(s) by the owner(s) holding the balance of the interest must be submitted to account for the entire right, title, and interest.

3. ☐ The assignee of an undivided interest in the entirety (a complete assignment from one of the joint inventors was made). The other parties, including inventors, who together own the entire right, title, and interest are:

Additional Statement(s) by the owner(s) holding the balance of the interest must be submitted to account for the entire right, title, and interest.

4. ☐ The recipient, via a court proceeding or the like (*e.g.*, bankruptcy, probate), of an undivided interest in the entirety (a complete transfer of ownership interest was made). The certified document(s) showing the transfer is attached.

The interest identified in option 1, 2 or 3 above (not option 4) is evidenced by either (choose **one** of options A or B below):

A. ☐ An assignment from the inventor(s) of the patent application/patent identified above. The assignment was recorded in the United States Patent and Trademark Office at Reel _____, Frame _____, or for which a copy thereof is attached.

B. ☑ A chain of title from the inventor(s), of the patent application/patent identified above, to the current assignee as follows:

1. From: Curtis Ling, Madhukar Reddy, Tim Gallagher To: MAXLINEAR, INC.

The document was recorded in the United States Patent and Trademark Office at Reel 031851, Frame 0086, or for which a copy thereof is attached.

2. From: MAXLINEAR, INC. To: ENTROPIC COMMUNICATIONS, LLC

The document was recorded in the United States Patent and Trademark Office at Reel 055898, Frame 0230, or for which a copy thereof is attached.

This collection of information is required by 37 CFR 3.73(b). The information is required to obtain or retain a benefit by the public which is to file (and by the USPTO to process) an application. Confidentiality is governed by 35 U.S.C. 122 and 37 CFR 1.11 and 1.14. This collection is estimated to take 12 minutes to complete, including gathering, preparing, and submitting the completed application form to the USPTO. Time will vary depending upon the individual case. Any comments on the amount of time you require to complete this form and/or suggestions for reducing this burden, should be sent to the Chief Information Officer, U.S. Patent and Trademark Office, U.S. Department of Commerce, P.O. Box 1450, Alexandria, VA 22313-1450. DO NOT SEND FEES OR COMPLETED FORMS TO THIS ADDRESS. **SEND TO: Commissioner for Patents, P.O. Box 1450, Alexandria, VA 22313-1450.**

If you need assistance in completing the form, call 1-800-PTO-9199 and select option 2.

Under the Paperwork Reduction Act of 1995, no persons are required to respond to a collection of information unless it displays a valid OMB control number.

STATEMENT UNDER 37 CFR 3.73(c)

3. From: _____ To: _____

The document was recorded in the United States Patent and Trademark Office at

Reel _____, Frame _____, or for which a copy thereof is attached.

4. From: _____ To: _____

The document was recorded in the United States Patent and Trademark Office at

Reel _____, Frame _____, or for which a copy thereof is attached.

5. From: _____ To: _____

The document was recorded in the United States Patent and Trademark Office at

Reel _____, Frame _____, or for which a copy thereof is attached.

6. From: _____ To: _____

The document was recorded in the United States Patent and Trademark Office at

Reel _____, Frame _____, or for which a copy thereof is attached.

☐ Additional documents in the chain of title are listed on a supplemental sheet(s).

☑ As required by 37 CFR 3.73(c)(1)(i), the documentary evidence of the chain of title from the original owner to the assignee was, or concurrently is being, submitted for recordation pursuant to 37 CFR 3.11.

[NOTE: A separate copy (i.e., a true copy of the original assignment document(s)) must be submitted to Assignment Division in accordance with 37 CFR Part 3, to record the assignment in the records of the USPTO. See MPEP 302.08]

The undersigned (whose title is supplied below) is authorized to act on behalf of the assignee.

/Ronald H. Spuhler/	2021-05-18
Signature	Date
Ronald H. Spuhler	52245
Printed or Typed Name	Title or Registration Number

Privacy Act Statement

The **Privacy Act of 1974 (P.L. 93-579)** requires that you be given certain information in connection with your submission of the attached form related to a patent application or patent. Accordingly, pursuant to the requirements of the Act, please be advised that: (1) the general authority for the collection of this information is 35 U.S.C. 2(b)(2); (2) furnishing of the information solicited is voluntary; and (3) the principal purpose for which the information is used by the U.S. Patent and Trademark Office is to process and/or examine your submission related to a patent application or patent. If you do not furnish the requested information, the U.S. Patent and Trademark Office may not be able to process and/or examine your submission, which may result in termination of proceedings or abandonment of the application or expiration of the patent.

The information provided by you in this form will be subject to the following routine uses:

1. The information on this form will be treated confidentially to the extent allowed under the Freedom of Information Act (5 U.S.C. 552) and the Privacy Act (5 U.S.C 552a). Records from this system of records may be disclosed to the Department of Justice to determine whether disclosure of these records is required by the Freedom of Information Act.
2. A record from this system of records may be disclosed, as a routine use, in the course of presenting evidence to a court, magistrate, or administrative tribunal, including disclosures to opposing counsel in the course of settlement negotiations.
3. A record in this system of records may be disclosed, as a routine use, to a Member of Congress submitting a request involving an individual, to whom the record pertains, when the individual has requested assistance from the Member with respect to the subject matter of the record.
4. A record in this system of records may be disclosed, as a routine use, to a contractor of the Agency having need for the information in order to perform a contract. Recipients of information shall be required to comply with the requirements of the Privacy Act of 1974, as amended, pursuant to 5 U.S.C. 552a(m).
5. A record related to an International Application filed under the Patent Cooperation Treaty in this system of records may be disclosed, as a routine use, to the International Bureau of the World Intellectual Property Organization, pursuant to the Patent Cooperation Treaty.
6. A record in this system of records may be disclosed, as a routine use, to another federal agency for purposes of National Security review (35 U.S.C. 181) and for review pursuant to the Atomic Energy Act (42 U.S.C. 218(c)).
7. A record from this system of records may be disclosed, as a routine use, to the Administrator, General Services, or his/her designee, during an inspection of records conducted by GSA as part of that agency's responsibility to recommend improvements in records management practices and programs, under authority of 44 U.S.C. 2904 and 2906. Such disclosure shall be made in accordance with the GSA regulations governing inspection of records for this purpose, and any other relevant (*i.e.*, GSA or Commerce) directive. Such disclosure shall not be used to make determinations about individuals.
8. A record from this system of records may be disclosed, as a routine use, to the public after either publication of the application pursuant to 35 U.S.C. 122(b) or issuance of a patent pursuant to 35 U.S.C. 151. Further, a record may be disclosed, subject to the limitations of 37 CFR 1.14, as a routine use, to the public if the record was filed in an application which became abandoned or in which the proceedings were terminated and which application is referenced by either a published application, an application open to public inspection or an issued patent.
9. A record from this system of records may be disclosed, as a routine use, to a Federal, State, or local law enforcement agency, if the USPTO becomes aware of a violation or potential violation of law or regulation.

UNITED STATES PATENT AND TRADEMARK OFFICE

UNITED STATES DEPARTMENT OF COMMERCE
United States Patent and Trademark Office
Address: COMMISSIONER FOR PATENTS
P.O. Box 1450
Alexandria, Virginia 22313-1450
www.uspto.gov

APPLICATION NUMBER	FILING OR 371(C) DATE	FIRST NAMED APPLICANT	ATTY. DOCKET NO./TITLE
13/962,871	08/08/2013	Madhukar Reddy	89194-002720US-883946

CONFIRMATION NO. 3953

23446
MCANDREWS HELD & MALLOY, LTD
500 WEST MADISON STREET
SUITE 3400
CHICAGO, IL 60661

POA ACCEPTANCE LETTER

OC000000125764160

Date Mailed: 05/24/2021

NOTICE OF ACCEPTANCE OF POWER OF ATTORNEY

This is in response to the Power of Attorney filed 05/18/2021.

The Power of Attorney in this application is accepted. Correspondence in this application will be mailed to the above address as provided by 37 CFR 1.33.

Questions about the contents of this notice and the requirements it sets forth should be directed to the Office of Data Management, Application Assistance Unit, at **(571) 272-4000** or **(571) 272-4200** or **1-888-786-0101**.

/nhassani/

UNITED STATES PATENT AND TRADEMARK OFFICE

UNITED STATES DEPARTMENT OF COMMERCE
United States Patent and Trademark Office
Address: COMMISSIONER FOR PATENTS
P.O. Box 1450
Alexandria, Virginia 22313-1450
www.uspto.gov

APPLICATION NUMBER	FILING OR 371(C) DATE	FIRST NAMED APPLICANT	ATTY. DOCKET NO./TITLE
13/962,871	08/08/2013	Madhukar Reddy	89194-002720US-883946

CONFIRMATION NO. 3953

POWER OF ATTORNEY NOTICE

OC000000125764123

20350
Kilpatrick Townsend & Stockton LLP - West Coast
Mailstop: IP Docketing - 22
1100 Peachtree Street
Suite 2800
Atlanta, GA 30309

Date Mailed: 05/24/2021

NOTICE REGARDING CHANGE OF POWER OF ATTORNEY

This is in response to the Power of Attorney filed 05/18/2021.

- The Power of Attorney to you in this application has been revoked by the assignee who has intervened as provided by 37 CFR 3.71. Future correspondence will be mailed to the new address of record(37 CFR 1.33).

Questions about the contents of this notice and the requirements it sets forth should be directed to the Office of Data Management, Application Assistance Unit, at **(571) 272-4000** or **(571) 272-4200** or **1-888-786-0101**.

/nhassani/

To: mhmpto@mcandrews-ip.com,,
From: PAIR_eOfficeAction@uspto.gov
Cc: PAIR_eOfficeAction@uspto.gov
Subject: Private PAIR Correspondence Notification for Customer Number 23446

May 25, 2021 03:49:59 AM

Dear PAIR Customer:

MCANDREWS HELD & MALLOY, LTD
500 WEST MADISON STREET
SUITE 3400
CHICAGO, IL 60661
UNITED STATES

The following USPTO patent application(s) associated with your Customer Number, 23446 , have new outgoing correspondence. This correspondence is now available for viewing in Private PAIR.

The official date of notification of the outgoing correspondence will be indicated on the form PTOL-90 accompanying the correspondence.

Disclaimer:
The list of documents shown below is provided as a courtesy and is not part of the official file wrapper. The content of the images shown in PAIR is the official record.

Application	Document	Mailroom Date	Attorney Docket No.
13962871	N570	05/24/2021	89194-002720US-883946
	N570	05/24/2021	89194-002720US-883946

To view your correspondence online or update your email addresses, please visit us anytime at https://sportal.uspto.gov/secure/myportal/privatepair.

If you have any questions, please email the Electronic Business Center (EBC) at EBC@uspto.gov with 'e-Office Action' on the subject line or call 1-866-217-9197 during the following hours:

Monday - Friday 6:00 a.m. to 12:00 a.m.

Thank you for prompt attention to this notice,

UNITED STATES PATENT AND TRADEMARK OFFICE

PATENT APPLICATION INFORMATION RETRIEVAL SYSTEM