8451179

THE UNITED STATES OF AMERICA

TO ALL TO WHOM THESE PRESENTS SHALL COME:

UNITED STATES DEPARTMENT OF COMMERCE

United States Patent and Trademark Office

January 22, 2024

THIS IS TO CERTIFY THAT ANNEXED IS A TRUE COPY FROM THE RECORDS OF THIS OFFICE OF THE FILE WRAPPER AND CONTENTS OF:

APPLICATION NUMBER: ***13/618,298***
FILING DATE: ***September 14, 2012***
PATENT NUMBER: ***9100363***
ISSUE DATE: ***August 04, 2015***

Certified by

Kathi

Performing the Functions and Duties of the
Under Secretary of Commerce
for Intellectual Property
and Director of the United States
Patent and Trademark Office

DECLARATION (37 C.F.R. 1.63), POWER OF ATTORNEY, AND AUTHORIZATION TO PERMIT ACCESS BY PARTICIPATING OFFICES (37 C.F.R. 1.14) FOR UTILITY PATENT APPLICATION USING AN APPLICATION DATA SHEET (37 C.F.R. 1.76)

As a below named inventor, I hereby declare that:

I believe the inventor(s) named below to be the original and first inventor(s) of the subject matter which is claimed and for which a patent is sought on the invention entitled:

AUTOMATICALLY RECOMMENDING FIREWALL RULES DURING ENTERPRISE INFORMATION TECHNOLOGY TRANSFORMATION

the application of which is attached hereto or (if following box is checked):

☐ Application No. _____, filed on _____ as amended on _____ (if applicable).

I have reviewed and understand the contents of the above-identified application, including the claims, as amended by any amendment specifically referred to above; and

I acknowledge the duty to disclose to the United States Patent and Trademark Office all information known to me to be material to patentability as defined in 37 CFR 1.56, including for continuation-in-part applications, material information which became available between the filing date of the prior application and the national or PCT international filing date of the continuation-in-part application.

Power of Attorney

I hereby appoint Practitioner(s) associated with the following Customer Number as my/our attorney(s) or agent(s) to prosecute the application identified above, and to transact all business in the United States Patent and Trademark Office connected therewith:

Customer No. **48062**

Direct Inquiries to: **Michael J. Cooper, Esq.**
Telephone Number: **203-255-6560**
Email Address: **mjc@rml-law.com**

COPY

Authorization to Permit Access to Application by Participating Offices

The undersigned hereby grants the USPTO authority to provide the European Patent Office (EPO), the Japan Patent Office (JPO), and any other intellectual property offices in which a foreign application claiming priority to the above-identified application is filed access to the above-identified patent application. See 37 CFR 1.14(c) and (h).

In accordance with 37 CFR 1.14(h)(3), access will be provided to a copy of the application-as-filed with respect to: 1) the above-identified application, 2) any foreign application to which the above-identified application claims priority under 35 U.S.C. 119(a)-(d) if a copy of the foreign application that satisfies the certified copy requirement of 37 C.F.R. 1.55 has been filed in the above-identified US application, and 3) any U.S. application from which benefit is sought in the above-identified application.

In accordance with 37 CFR 1.14(c), access may be provided to information concerning the date of filing the Authorization to Permit Access to Application by Participating Offices.

Declaration

I hereby declare that all statements made herein of my own knowledge are true, all statements made on information and belief are believed to be true, and further that these statements were made with the knowledge that willful false statements and the like are punishable by fine or imprisonment, or both, under 18 U.S.C. Section 1001, and may jeopardize the validity of the application or any patent issued thereon.

COP

Executed by Inventor 1 of 5

(1) Name of Inventor: Nancy Burchfield

Signature: _____ 9/05/2012
Date

Citizenship: USA

COPY

IBM DOCKET NUMBER: YOR920120481US1

Executed by Inventor 2 of 5

(2) Name of Inventor: Nathaniel Hang

Signature: _____ 09/14/2012
Date

Citizenship: USA

COPY

Executed by Inventor 3 of 5

(3) Name of Inventor: Rafah A. Hosn

Signature: _____ 09/05/2012
Date

Citizenship: Canada

COPY

Executed by Inventor 4 of 5

(4) Name of Inventor: James Murray

Signature: _____ 8/31/12
Date

Citizenship: USA

COPY

Executed by Inventor 5 of 5

(5) Name of Inventor: Harigovind V. Ramasamy

Signature: _____ 9/5/2012
Date

Citizenship: USA

COPY

AUTOMATICALLY RECOMMENDING FIREWALL RULES DURING ENTERPRISE INFORMATION TECHNOLOGY TRANSFORMATION

Cross-Reference to Related Applications

This application is a continuation of U.S. Patent Application No. 13/600,891, filed August 31, 2012, and incorporated by reference herein.

Field of the Invention

Embodiments of the invention generally relate to computer systems, and computer system service technologies, information technology (IT), and, more particularly, to IT transformation tasks.

Background

Migration, consolidation, virtualization, data center relocation, and cloudification are examples of large-scale coordinated changes to an organization's IT infrastructure. These changes may pertain to servers, services, or applications. As used herein, those as well as similar tasks are collectively referred to as "IT transformation." Also, the original IT infrastructure is referred to as the source infrastructure or source environment, and the new IT infrastructure (which in some cases may include part of the source environment) is referred to as the target infrastructure or target environment. The source and target IT infrastructures may be physical or virtual, may include the same or different server/device platforms, and may be located in a traditional data center, server rack, or even the cloud. During many such activities, a common requirement is that components that were able to communicate in the source environment should also be able to do so in the target environment. For example, it may be required that a set of clients that were previously able to communicate with a server in the source environment should also be able to do the same with the migrated server in the target environment.

Accordingly, in IT transformation activities, the network device infrastructure (which includes routers, firewalls, switches, etc.) may need to be configured such that communication patterns (plus or minus some patterns) in the source environment are represented in the target environment. In existing approaches, firewall configuration in the target environment is performed by migration architects in a complex, manual, and error-prone fashion, often resulting in missed deadlines, incorrect networking setups, and application failures. The following factors can contribute to the complexity and error-prone nature of this exercise:

- Some transformation activities may also involve optimization of security and communications. In such scenarios, some communications that were allowed in the source environment may be identified as security holes that need to be plugged or are no longer necessary in the target environment. Likewise, new applications may be introduced in the target environment, and as a result, new communications that were not prevalent in the source environment may need to be introduced in the target environment.
- Often in IT transformation, the network topology in the target environment may differ (partially or completely) from that in the source environment.
- The network devices in the target environment may be from a different vendor or different versions/models from the same vendor.
- The transformation activities may be applied to a subset of the devices, servers, services, and/or applications in the source environment or to the entire environment.

A need therefore exists to provide migration architects with an automated and intelligent capability for analyzing, designing, and configuring firewalls as part of IT transformation activities.

Summary

In one aspect of the present invention, techniques for automatically generating one or more rules during IT transformation for configuring one or more firewall interfaces in a post-transformation target environment can include obtaining at least one communication pattern occurring in a pre-transformation source environment, and automatically generating one or more vendor-neutral rules for one or more intended firewall interfaces in a post-transformation target environment based on the at least one communication pattern occurring in the source environment and based on information derived from the target environment.

Another aspect of the invention or elements thereof can be implemented in the form of an article of manufacture tangibly embodying computer readable instructions which, when implemented, cause a computer to carry out a plurality of method steps, as described herein. Furthermore, another aspect of the invention or elements thereof can be implemented in the form of an apparatus including a memory and at least one processor that is coupled to the memory and operative to perform noted method steps. Yet further, another aspect of the invention or elements thereof can be implemented in the form of means for carrying out the method steps described herein, or elements thereof; the means can include (i) hardware module(s), (ii) software module(s), or (iii) a combination of hardware and software modules; any of (i)-(iii) implement the specific techniques set forth herein, and the software modules are stored in a tangible computer-readable storage medium (or multiple such media).

These and other objects, features and advantages of the present invention will become apparent from the following detailed description of illustrative embodiments thereof, which is to be read in connection with the accompanying drawings.

Brief Description of the Drawings

FIG. 1 and FIG. 2 are diagrams illustrating rule generation, according to an embodiment of the invention;

FIG. 3 is a diagram illustrating vendor-neutral to vendor-specific firewall rules, according to an embodiment of the invention;

FIG. 4 is a flow diagram illustrating techniques for automatically generating one or more rules during IT transformation for configuring one or more firewall interfaces in a post-transformation target environment, according to an embodiment of the invention; and

FIG. 5 is a system diagram of an exemplary computer system on which at least one embodiment of the invention can be implemented.

Detailed Description

As described herein, an aspect of the present invention includes automatically recommending firewall rules during an enterprise IT transformation. As noted herein, enterprise IT transformation activities can include migration and consolidation of applications from one IT infrastructure (for example, a source) to another (for example, a target). The target infrastructure can include, for example, a new data center or the cloud. As detailed herein, at least one embodiment of the invention includes automatic generation of rules for configuring the firewalls in a target environment, on a per-interface basis, using (potentially incomplete or partial) discovery data about a source environment and/or details about communication required in the target environment and/or details about security controls required in the target environment.

By way of example, the firewall infrastructure in a source environment may include numerous firewalls, and obtaining access to each firewall may not be possible. Further, even if all of the firewalls could be accessed, such access may not prove entirely useful because, as part of the migration, security and communication optimizations may be required. In such scenarios, as noted, some communications that were allowed in the source environment may be identified as security holes that need to be plugged or are no longer necessary in the target environment. Likewise, new applications may be introduced in the target environment, and as a result, new communications may need to

be introduced in the target environment. Moreover, the network topology in the source environment and the target environment may be different. Furthermore, the firewall devices in the source and target environments may be from a different set of vendors, different models, and/or different versions.

Accordingly, at least one embodiment of the invention includes automatically recommending rules for firewalls in the target environment, on a per-interface basis, during an IT transformation. In such techniques, knowledge about communication patterns happening in the source environment are used to generate abstract vendor-neutral rules from these patterns for each intended firewall interface in a target environment. Additionally, abstract vendor-neutral rules can be converted into actual commands for specific firewalls belonging to a particular vendor.

Vendor-neutral rules are not specific to any particular firewall vendor, and contain the values for one or more attributes generally needed for configuring flow control in the network. Examples of these attributes can include source internet protocol (IP) address, source subnet, destination IP address, destination subnet, protocol (for example, transmission control protocol (TCP), user datagram protocol (UDP)), action to be taken (that is, accept packet or deny packet), port number(s), and traffic direction (incoming or outgoing or both). Vendor-specific rules are commands that be directly used to configure a particular firewall device.

Knowledge about communication patterns in the source environment may be obtained by performing analysis of firewall configuration files associated with the source environment, observing run-time network flow at the source environment, analyzing configured dependencies at one or more servers running on the source environment, analyzing firewall log files, or combinations thereof. The communication patterns are typically expressed using attributes such as source IP address, source subnet, destination IP address, destination subnet, protocol (for example, TCP, UDP), action to be taken (that is, accept packet or deny packet), port number(s), traffic direction (incoming or outgoing or both), or combinations thereof. For example, a run-time network flow at the source

environment may be obtained by running the netstat tool available on many common platforms. As a specific example, the netstat tool run on a host with IP address 192.168.254.200 may reveal the following communication pattern, where there is a connection between 192.168.254.200 at port 22 (ssh) and 64.73.135.198 at port 19583; that is, 192.168.254.200 is likely a ssh server.

FIG. 1 is a diagram illustrating firewall migration analytics, according to an embodiment of the present invention. By way of illustration, FIG. 1 depicts observed communications patterns 202 (in the source environment), a source-target mapping component 104 and zone contents and firewall interfaces (for the target environment) 106, all of which is provided to an elementary rule generator component 108. Optionally, specified services ports 120 and known services ports 118 may also be provided as input to the elementary rule generator component. Source-target mapping provides information on how an IP address that occurs in the communication pattern(s) changes as a result of the IT transformation activity. For example, the source-target mapping may specify that the IP address of the ssh server changes from 192.168.254.200 to 10.20.6.11 as a result of the IT transformation. Zone contents and firewall interfaces (for the target environment) information provides the security zone structure of the target environment, that is, which subnets belong to which security zone, where there are at least two firewall interfaces separating every pair of zones, etc.

Elementary information about service ports is useful in the generation of firewall rules. In the above example of host 64.73.135.198 having a connection with host 192.168.254.200 at the (ssh) service port, the elementary rule generator will deduce that firewalls on the path between those hosts were configured to allow clients such as 64.73.135.198 to connect to the server 192.168.254.200 at port 22 in the source environment. Ports such as 21, 22, and 80 fall into the known service ports category, because they have been officially registered with the Internet Assigned Numbers Authority (IANA) and assigned for specific services (ftp, ssh, and http, respectively). Such a list of ports is provided as an (optional) input (represented by known services

ports 118 in FIG. 1) to the elementary rule generator 108. Additionally, certain ports may be designated for specific services in the IT infrastructure being considered. A system or network administrator in the source environment may be able to provide this information, which is provided as an (optional) input (represented by specified services ports 120 in FIG. 1) to the elementary rule generator 108. Further, the elementary rule generator receives input in the form of new communication requirements in the target environment 130.

The elementary rule generator 108 generates per-interface elementary rules 116 based on the inputs. An elementary rule is specific to one particular firewall interface in the target environment. The rule identifies attributes such as source IP address, source subnet, destination IP address, destination subnet, protocol (for example, TCP, UDP), action to be taken (that is, accept packet or deny packet), port number(s), traffic direction (incoming or outgoing), rule type, and any connection specific information (for example, TCP SYN and ACK flag values). Any packet arriving at the interface satisfying the attribute values specified in the rule will be subjected to the specified action to be taken; that is, if the action is accept, then the packet will be allowed through the interface; otherwise, the packet will be dropped.

Some of the source communication patterns provided as input may have insufficient or invalid information to generate the right elementary rules. For example, in the above example of host 64.73.135.198 having a connection to host 192.168.254.200, if the port information is missing, the elementary rule generator 108 can potentially generate a rule that allows communication between the two hosts in the target environment. However, such a rule would also not place any restriction on the ports for connection, thereby allowing potentially unwanted traffic. Hence, the elementary rule generator 108 will classify such source communication patterns as unresolvable source communication patterns 114.

The elementary rules 116 along with known service ports 118 and the specified services ports 120 provide input to a vendor-neutral firewall rule generation heuristics

component 122. The vendor-neutral firewall rule generation heuristics component 122 generates recommended vendor-neutral firewall rules 124.

Elementary rules 116 are an intermediate construct used for describing communication patterns and requirements that have been classified based on their relevance to individual firewall interfaces that need to be configured in the target environment. A vendor-neutral firewall rule contains all the attributes and their associated values necessary for configuring flow-control rules on a firewall device; however, it is not specific to one particular vendor. A vendor-neutral firewall rule may be likened to pseudo code, and vendor-specific firewall rules to machine-level code.

Vendor-neutral firewall rule generation can be performed for each firewall interface in the target environment. Input includes elementary rules for each firewall interface, and according to at least one embodiment of the invention, for each interface, the set of firewall rules that will "cover" all of the elementary rules are generated.

To generate the vendor-neutral rules that are needed to configure a firewall interface based on the elementary rules, the techniques detailed herein include identifying the following:

(1) what services internal to the security zone guarded by the firewall interface need to be accessible from the outside, and from which devices and/or networks;

(2) what services external to the security zone guarded by the firewall interface need to be accessible by devices inside the security zone;

(3) what internal devices/networks/ports need to be blocked for access from external devices; and

(4) what external devices/networks/ports need to be blocked for access from internal devices.

Each communication pattern contains two {IP address, port} pairs, one pair for each peer in the communication pattern. Here, an IP address may denote the address of a specific host or a subnet, and a port may denote a specific port number or range of numbers. The IP address or port may have the value ANY, denoting that all IP addresses

and ports respectively are included. Whether one or both of the {IP address, port} tuples corresponds to a service can be identified based on the known port and specified ports information provided. Additionally, the identification can be performed based on heuristics, such as the following:

If a particular threshold (say, n) of communication patterns observed in the source environment indicate a connection with a particular {IP address, port} pair, then that indicates that the IP address is hosting a service on the specified port. Other example heuristics include:

- identifying transmission control protocol (TCP) services using SYN-ACK flags;
- aggregating elementary rules based on whether the source (or destination) IP addresses in those rules are part of the same subnet; and
- identifying servers by port ranges.

Additionally, at least one embodiment of the invention can implement tunable thresholds and strategies.

Once a particular {IP address, port} pair that occurs in the elementary rule for a firewall interface is identified as corresponding to a service, the vendor-neutral firewall rule generator generates for that interface:

- A rule for allowing inbound traffic into that {IP address, port} pair if the IP address is internal to the security zone guarded by the interface, unless such a rule had been previously generated; and
- A rule for allowing outbound traffic into that {IP address, port} pair if the IP address is external to the security zone guarded by the interface, unless such a rule had been previously generated.

As used herein, an elementary rule for a given firewall interface is *covered* by a firewall rule at that interface if and only if:

- The specified action to be taken (accept or deny) is the same for both the elementary rule and the firewall rule, and

- In case of an accept action, the set of all packets accepted by the elementary rule is a subset of the set of all packets accepted by the firewall rule, and
- In case of a deny action, the set of all packets denied by the elementary rule is a subset of the set of all packets denied by the firewall rule.

As example, consider the following subset of elementary rules generated for the firewall interface 10.20.6.1 (Table I):

PROTOCOL	SOURCE_IP	SOURCE_PORT	DEST_IP	DEST_PORT	DIRECTION	ACTION
TCP	10.20.6.11	22	10.20.81.87	50022	OUTGOING	ACCEPT
TCP	10.20.6.11	22	192.251.125.40	22880	OUTGOING	ACCEPT
TCP	10.20.6.11	22	192.251.125.40	51950	OUTGOING	ACCEPT
TCP	10.20.6.11	22	192.251.125.40	54532	OUTGOING	ACCEPT
TCP	10.20.6.11	22	192.251.125.40	28193	OUTGOING	ACCEPT
TCP	10.20.6.11	22	192.251.125.40	43561	OUTGOING	ACCEPT
TCP	10.20.6.11	22	192.251.125.40	53955	OUTGOING	ACCEPT
TCP	10.20.6.11	22	64.73.135.198	38711	OUTGOING	ACCEPT
TCP	10.20.6.11	22	64.73.135.198	19583	OUTGOING	ACCEPT
TCP	10.20.6.11	22	64.73.135.198	25571	OUTGOING	ACCEPT
TCP	10.20.6.11	22	64.73.135.198	38727	OUTGOING	ACCEPT
TCP	10.20.6.11	22	64.73.135.198	25553	OUTGOING	ACCEPT
TCP	10.20.6.11	22	64.73.135.198	38654	OUTGOING	ACCEPT
TCP	10.20.6.11	22	64.73.135.198	38733	OUTGOING	ACCEPT
TCP	10.20.6.11	22	64.73.135.198	25565	OUTGOING	ACCEPT
TCP	10.20.6.11	22	64.73.135.198	25580	OUTGOING	ACCEPT
TCP	10.20.6.11	22	64.73.135.198	25551	OUTGOING	ACCEPT
TCP	10.20.6.11	22	64.73.135.198	38652	OUTGOING	ACCEPT

An example set of vendor-neutral firewall rules that can cover the above elementary rules can include (Table II):

FW_INTERFACE_IP	SOURCE_ADDRESS	SOURCE_SUBNET_MASK	DEST_ADDRESS	DEST_SUBNET_MASK	PROTOCOL	DEST_PORT	ACTION	FLOW_DIRECTION	SOURCE_PORT
10.20.6.1	10.20.81.87	255.255.255.255	10.20.6.11	255.255.255.255	TCP	22	accept	IN	ANY
10.20.6.1	192.251.125.40	255.255.255.255	10.20.6.11	255.255.255.255	TCP	22	accept	IN	ANY
10.20.6.1	64.73.135.198	255.255.255.255	10.20.6.11	255.255.255.255	TCP	22	accept	IN	ANY

Another example set of vendor-neutral firewall rules that can cover the above elementary rules can include (Table III):

FW_INTERFACE_IP	SOURCE_ADDRESS	SOURCE_SUBNET_MASK	DEST_ADDRESS	DEST_SUBNET_MASK	PROTOCOL	DEST_PORT	ACTION	FLOW_DIRECTION	SOURCE_PORT
10.20.6.1	ANY	ANY	10.20.6.11	255.255.255.255	TCP	22	accept	IN	ANY

While both sets of vendor-neutral firewall rules can cover the above elementary rules (Table I), the first set (Table II) allows a stricter set of flows (that is, only those originating from IP addresses 10.20.81.87, 192.251.125.40, 64.73.135.198 and destined

to port 22 of IP address 10.20.6.11) than the second set (Table III) (that is, any flow destined to port 22 of IP address 10.20.6.11). While the first set (Table II) provides greater security, the second set (Table III) provides greater flexibility. Based on its setting, the vendor-neutral firewall rule generation component may generate rules that provide greater security or greater flexibility or both.

FIG. 2 is a diagram illustrating rule generation, according to one embodiment of the invention. By way of illustration, FIG. 2 depicts observed communications patterns 202 (from the source environment), which are provided to the elementary rule generator component 108 (as depicted in FIG. 1). Elementary rule generator component 108 carries out a flow of data between multiple sub-components including a data cleaner component 204, a de-duplicator component 206, and a transformation component 208 which includes a mapper component 210 (the mapper component receiving a source-target mapping 104 as input). The data cleaner component 204 categorizes source environment communication patterns into one of two categories: (1) patterns that have insufficient or invalid information to generate the right elementary rules are categorized as unresolvable, and (2) the rest of the patterns are passed on for further processing to generate elementary rules. The de-duplicator component 206 is an optional component and removes duplicate communication patterns for improved efficiency in later processing stages.

The transformation component 208 generates transformed communication patterns 212 based on the source-target host/IP subnet mapping information 104. If source-target host/IP subnet mapping information 104 is empty or not provided, the transformed communication patterns will be the same as the input provided to the transformation component 208. As explained herein, the source-target host/IP subnet mapping information 104 describes how an IP address that occurs in the communication pattern(s) changes as a result of the IT transformation activity. For example, the source-target mapping may specify that the IP address of the ssh server changes from 192.168.254.200 to 10.20.6.11 as a result of the IT transformation. The transformation

component 210 applies such mapping information 104 to the cleaned (and possibly, de-duplicated) source communication patterns provided as input. The transformed communication patterns 212 will have the mapped IP addresses and subnets, where applicable.

The transformed communication patterns 212 are forwarded to a re-calibrator component 214 (which receives input in the form of new communication requirements 130 in the target environment). The new communication requirements may be of two types:

- Communication patterns previously present in the source environment, but that should be avoided in the target environment. Suppose that communication to a web server from a certain client was allowed previously, but in the data center to which the web server is being migrated to, that client should not be allowed to connect to the web server.
- Communication patterns not were previously present in the source environment, but should be allowed in the target environment. Suppose that a new service (that was absent in the source environment) is going to be deployed at port 50505 at a server that is being migrated to the target environment. Consequently, this new communication pattern should be taken into account when generating elementary rules.

Based on the new communication requirements, the re-calibrator component 214 generates adjusted and transformed communication patterns 216, which are provided to a classifier component 218 (which receives zone contents and firewall interfaces 106 from the target environment), which ultimately outputs per-interface elementary rules 116. The classifier component 218 considers each firewall interface that needs to be configured in the target environment, and identifies the subset of adjusted and transformed communication patterns 216 that are relevant for the interface. An adjusted and transformed communication pattern is relevant to an interface, if the pattern contains the source IP address, source subnet, destination IP address, or destination subnet that is

part of the security zone guarded by the firewall interface. Note that some adjusted and transformed communication patterns may not be relevant to any firewall interface in the target environment, while other patterns may not warrant generating an elementary rule (for example, when both the source IP address and the destination IP address are in the same security zone).

In the above example of host 64.73.135.198 having a connection to the ssh server 192.168.254.200 (whose IP address in the target environment is 10.20.6.11), the adjusted and transformed communication pattern may specify that communication be allowed from 64.73.135.198 to 192.168.254.200 on port 22. If there is a firewall interface with IP address 10.20.6.1 that guards the security zone containing subnet 10.20.6.0/24, then that communication pattern will be classified as relevant for the firewall interface, and hence will be part of the set of elementary rules generated for the firewall interface.

FIG. 3 is a diagram illustrating vendor-neutral to vendor-specific firewall rules, according to an embodiment of the invention. By way of illustration, FIG. 3 depicts vendor-neutral firewall rules 302, which are provided to a vendor-specific generator plug-in 304. The vendor-specific generator plug-in 304 generates recommended vendor-specific firewall rules 306. There may be different vendor-specific generator plug-ins for different firewall vendors and models. The vendor-specific generator plug-in component converts recommended vendor-specific firewall rules into a set of commands that can be used to directly configure a particular firewall device.

Consider the set of vendor-neutral firewall rules in the previous example (Table II):

FW_INTERFACE_IP	SOURCE_ADDRESS	SOURCE_SUBNET_MASK	DEST_ADDRESS	DEST_SUBNET_MASK	PROTOCOL	DEST_PORT	ACTION	FLOW_DIRECTION	SOURCE_PORT
10.20.6.1	10.20.81.87	255.255.255.255	10.20.6.11	255.255.255.255	TCP	22	accept	IN	ANY
10.20.6.1	192.251.125.40	255.255.255.255	10.20.6.11	255.255.255.255	TCP	22	accept	IN	ANY
10.20.6.1	64.73.135.198	255.255.255.255	10.20.6.11	255.255.255.255	TCP	22	accept	IN	ANY

A plug-in for the CISCO™ PIX device, for instance, may generate the following commands for configuring the device to allow flows specified by the above set of vendor-neutral firewall rules:

nameif ethernet0 outside intf123

ip address intf123 10.20.6.1 255.255.255.0

access-list ACL1 permit tcp 10.20.81.87 10.20.6.11 eq ssh

access-list ACL1 permit tcp 192.251.125.40 10.20.6.11 eq ssh

access-list ACL1 permit tcp 64.73.135.198 10.20.6.11 eq ssh

access-group ACL1 in interface intf123

FIG. 4 is a flow diagram illustrating techniques for automatically generating one or more rules during IT transformation for configuring one or more firewall interfaces in a post-transformation target environment, according to an embodiment of the present invention. Step 402 includes obtaining at least one communication pattern occurring in a pre-transformation source environment. Obtaining at least one communication pattern can include performing an analysis of one or more firewall configuration files associated with the source environment, observing one or more run-time network flows at the source environment, analyzing one or more configured dependencies at one or more servers running on the source environment, analyzing one or more firewall log files, and/or using manually provided information about one or more flows at the source environment.

Additionally, as detailed herein, obtaining communication patterns can also include deriving results from an environment discovery tool, deriving results from a flow spreadsheet, obtaining information pertaining to service ports, etc.

Step 404 includes automatically generating one or more vendor-neutral rules for one or more intended firewall interfaces in a post-transformation target environment based on the at least one communication pattern occurring in the source environment and based on information derived from the target environment. Information derived from the target environment used for automatically generating one or more vendor-neutral firewall rules can include firewall topology, security zone topology, security zone contents, and/or a new internet protocol (IP) address and subnet information.

Automatically generating one or more vendor-neutral rules can include determining whether a communication pattern and/or one or more additional

requirements from the target environment are relevant for the one or more firewall interfaces in the target environment. Additionally, automatically generating one or more vendor-neutral rules can include automatically generating one or more vendor-neutral per-interface rules for one or more intended interfaces in the target environment based on the at least one communication pattern occurring in the source environment and/or one or more additional requirements from the target environment that are determined relevant for each of those interface.

Automatically generating one or more vendor-neutral per-interface rules for one or more intended interfaces in the target environment can include generating at least one transformed communication pattern by applying a source environment-target environment IP address or subnet mapping to the at least one communication pattern occurring in the source environment (where the mapping function may be an identity function), incorporating new communication and/or new security requirements from the target environment, and/or incorporating information pertaining to zone contents and firewall interfaces of the target environment. Additionally, at least one embodiment of the invention includes applying heuristics and/or user-provided information to identify one or more service ports.

Further, automatically generating one or more vendor-neutral rules for one or more intended firewall interfaces in a target environment can include accounting for one or more rules already implemented for the target environment's firewalls and recommending additions, deletions, and/or updates to those rules.

The techniques depicted in FIG. 4 can additionally include automatically converting the one or more vendor-neutral rules into one or more vendor-specific firewall rules for the target environment based on information derived from the target environment. Information derived from the target environment can include already-implemented vendor-specific firewall rules in the target environment, information about the firewall vendor, model, and interfaces.

Also, the techniques depicted in FIG. 4 can include automatically generating vendor-specific firewall rules for a target environment during an IT transformation activity. Further, as detailed herein, an IT transformation activity can include migration, consolidation, virtualization, data center relocation, and cloudification of at least one application or server or service from a source information technology infrastructure to a target information technology infrastructure.

As detailed herein, in at least one embodiment of the invention, only a subset of devices in the source environment are being transformed. Also, firewall and/or security zone topology in the target environment can be partially or fully different from that of the source environment, and the devices in the target environment can be from a different vendor and/or model and/or platform from one or more devices in the source environment. Additionally, firewall devices can include physical and/or virtual devices. Further, in at least one embodiment of the invention, security requirements in the source environment can differ from those in the target environment, and connectivity requirements in the source environment can also differ from those in the target environment.

The techniques depicted in FIG. 4 can also, as described herein, include providing a system, wherein the system includes distinct software modules, each of the distinct software modules being embodied on a tangible computer-readable recordable storage medium. All of the modules (or any subset thereof) can be on the same medium, or each can be on a different medium, for example. The modules can include any or all of the components shown in the figures and/or described herein. In an aspect of the invention, the modules can run, for example, on a hardware processor. The method steps can then be carried out using the distinct software modules of the system, as described above, executing on a hardware processor. Further, a computer program product can include a tangible computer-readable recordable storage medium with code adapted to be executed to carry out at least one method step described herein, including the provision of the system with the distinct software modules.

Additionally, the techniques depicted in FIG. 4 can be implemented via a computer program product that can include computer useable program code that is stored in a computer readable storage medium in a data processing system, and wherein the computer useable program code was downloaded over a network from a remote data processing system. Also, in an aspect of the invention, the computer program product can include computer useable program code that is stored in a computer readable storage medium in a server data processing system, and wherein the computer useable program code is downloaded over a network to a remote data processing system for use in a computer readable storage medium with the remote system.

As will be appreciated by one skilled in the art, aspects of the present invention may be embodied as a system, method or computer program product. Accordingly, aspects of the present invention may take the form of an entirely hardware embodiment, an entirely software embodiment (including firmware, resident software, micro-code, etc.) or an embodiment combining software and hardware aspects that may all generally be referred to herein as a "circuit," "module" or "system." Furthermore, aspects of the present invention may take the form of a computer program product embodied in a computer readable medium having computer readable program code embodied thereon.

An aspect of the invention or elements thereof can be implemented in the form of an apparatus including a memory and at least one processor that is coupled to the memory and operative to perform exemplary method steps.

Additionally, an aspect of the present invention can make use of software running on a general purpose computer or workstation. With reference to FIG. 5, such an implementation might employ, for example, a processor 502, a memory 504, and an input/output interface formed, for example, by a display 506 and a keyboard 508. The term "processor" as used herein is intended to include any processing device, such as, for example, one that includes a CPU (central processing unit) and/or other forms of processing circuitry. Further, the term "processor" may refer to more than one individual processor. The term "memory" is intended to include memory associated with a

processor or CPU, such as, for example, RAM (random access memory), ROM (read only memory), a fixed memory device (for example, hard drive), a removable memory device (for example, diskette), a flash memory and the like. In addition, the phrase "input/output interface" as used herein, is intended to include, for example, a mechanism for inputting data to the processing unit (for example, mouse), and a mechanism for providing results associated with the processing unit (for example, printer). The processor 502, memory 504, and input/output interface such as display 506 and keyboard 508 can be interconnected, for example, via bus 510 as part of a data processing unit 512. Suitable interconnections, for example via bus 510, can also be provided to a network interface 514, such as a network card, which can be provided to interface with a computer network, and to a media interface 516, such as a diskette or CD-ROM drive, which can be provided to interface with media 518.

Accordingly, computer software including instructions or code for performing the methodologies of the invention, as described herein, may be stored in associated memory devices (for example, ROM, fixed or removable memory) and, when ready to be utilized, loaded in part or in whole (for example, into RAM) and implemented by a CPU. Such software could include, but is not limited to, firmware, resident software, microcode, and the like.

A data processing system suitable for storing and/or executing program code will include at least one processor 502 coupled directly or indirectly to memory elements 504 through a system bus 510. The memory elements can include local memory employed during actual implementation of the program code, bulk storage, and cache memories which provide temporary storage of at least some program code in order to reduce the number of times code must be retrieved from bulk storage during implementation.

Input/output or I/O devices (including but not limited to keyboards 508, displays 506, pointing devices, and the like) can be coupled to the system either directly (such as via bus 510) or through intervening I/O controllers (omitted for clarity).

Network adapters such as network interface 514 may also be coupled to the system to enable the data processing system to become coupled to other data processing systems or remote printers or storage devices through intervening private or public networks. Modems, cable modem and Ethernet cards are just a few of the currently available types of network adapters.

As used herein, including the claims, a "server" includes a physical data processing system (for example, system 512 as shown in FIG. 5) running a server program. It will be understood that such a physical server may or may not include a display and keyboard.

As noted, aspects of the present invention may take the form of a computer program product embodied in a computer readable medium having computer readable program code embodied thereon. Also, any combination of computer readable media may be utilized. The computer readable medium may be a computer readable signal medium or a computer readable storage medium. A computer readable storage medium may be, for example, but not limited to, an electronic, magnetic, optical, electromagnetic, infrared, or semiconductor system, apparatus, or device, or any suitable combination of the foregoing. More specific examples (a non-exhaustive list) of the computer readable storage medium would include the following: an electrical connection having one or more wires, a portable computer diskette, a hard disk, a random access memory (RAM), a read-only memory (ROM), an erasable programmable read-only memory (EPROM or Flash memory), an optical fiber, a portable compact disc read-only memory (CD-ROM), an optical storage device, a magnetic storage device, or any suitable combination of the foregoing. In the context of this document, a computer readable storage medium may be any tangible medium that can contain, or store a program for use by or in connection with an instruction execution system, apparatus, or device.

A computer readable signal medium may include a propagated data signal with computer readable program code embodied therein, for example, in baseband or as part of a carrier wave. Such a propagated signal may take any of a variety of forms,

including, but not limited to, electro-magnetic, optical, or any suitable combination thereof. A computer readable signal medium may be any computer readable medium that is not a computer readable storage medium and that can communicate, propagate, or transport a program for use by or in connection with an instruction execution system, apparatus, or device.

Program code embodied on a computer readable medium may be transmitted using an appropriate medium, including but not limited to wireless, wireline, optical fiber cable, RF, etc., or any suitable combination of the foregoing.

Computer program code for carrying out operations for aspects of the present invention may be written in any combination of at least one programming language, including an object oriented programming language such as Java, Smalltalk, C++ or the like and conventional procedural programming languages, such as the "C" programming language or similar programming languages. The program code may execute entirely on the user's computer, partly on the user's computer, as a stand-alone software package, partly on the user's computer and partly on a remote computer or entirely on the remote computer or server. In the latter scenario, the remote computer may be connected to the user's computer through any type of network, including a local area network (LAN) or a wide area network (WAN), or the connection may be made to an external computer (for example, through the Internet using an Internet Service Provider).

Aspects of the present invention are described herein with reference to flowchart illustrations and/or block diagrams of methods, apparatus (systems) and computer program products according to embodiments of the invention. It will be understood that each block of the flowchart illustrations and/or block diagrams, and combinations of blocks in the flowchart illustrations and/or block diagrams, can be implemented by computer program instructions. These computer program instructions may be provided to a processor of a general purpose computer, special purpose computer, or other programmable data processing apparatus to produce a machine, such that the instructions, which execute via the processor of the computer or other programmable data processing

apparatus, create means for implementing the functions/acts specified in the flowchart and/or block diagram block or blocks.

These computer program instructions may also be stored in a computer readable medium that can direct a computer, other programmable data processing apparatus, or other devices to function in a particular manner, such that the instructions stored in the computer readable medium produce an article of manufacture including instructions which implement the function/act specified in the flowchart and/or block diagram block or blocks. Accordingly, an aspect of the invention includes an article of manufacture tangibly embodying computer readable instructions which, when implemented, cause a computer to carry out a plurality of method steps as described herein.

The computer program instructions may also be loaded onto a computer, other programmable data processing apparatus, or other devices to cause a series of operational steps to be performed on the computer, other programmable apparatus or other devices to produce a computer implemented process such that the instructions which execute on the computer or other programmable apparatus provide processes for implementing the functions/acts specified in the flowchart and/or block diagram block or blocks.

The flowchart and block diagrams in the figures illustrate the architecture, functionality, and operation of possible implementations of systems, methods and computer program products according to various embodiments of the present invention. In this regard, each block in the flowchart or block diagrams may represent a module, component, segment, or portion of code, which comprises at least one executable instruction for implementing the specified logical function(s). It should also be noted that, in some alternative implementations, the functions noted in the block may occur out of the order noted in the figures. For example, two blocks shown in succession may, in fact, be executed substantially concurrently, or the blocks may sometimes be executed in the reverse order, depending upon the functionality involved. It will also be noted that each block of the block diagrams and/or flowchart illustration, and combinations of blocks in the block diagrams and/or flowchart illustration, can be implemented by special purpose

hardware-based systems that perform the specified functions or acts, or combinations of special purpose hardware and computer instructions.

It should be noted that any of the methods described herein can include an additional step of providing a system comprising distinct software modules embodied on a computer readable storage medium; the modules can include, for example, any or all of the components detailed herein. The method steps can then be carried out using the distinct software modules and/or sub-modules of the system, as described above, executing on a hardware processor 502. Further, a computer program product can include a computer-readable storage medium with code adapted to be implemented to carry out at least one method step described herein, including the provision of the system with the distinct software modules.

In any case, it should be understood that the components illustrated herein may be implemented in various forms of hardware, software, or combinations thereof, for example, application specific integrated circuit(s) (ASICS), functional circuitry, an appropriately programmed general purpose digital computer with associated memory, and the like. Given the teachings of the invention provided herein, one of ordinary skill in the related art will be able to contemplate other implementations of the components of the invention.

The terminology used herein is for the purpose of describing particular embodiments only and is not intended to be limiting of the invention. As used herein, the singular forms "a," "an" and "the" are intended to include the plural forms as well, unless the context clearly indicates otherwise. It will be further understood that the terms "comprises" and/or "comprising," when used in this specification, specify the presence of stated features, integers, steps, operations, elements, and/or components, but do not preclude the presence or addition of another feature, integer, step, operation, element, component, and/or group thereof.

The corresponding structures, materials, acts, and equivalents of all means or step plus function elements in the claims below are intended to include any structure, material,

or act for performing the function in combination with other claimed elements as specifically claimed.

At least one aspect of the present invention may provide a beneficial effect such as, for example, automatically identifying configurations for the firewalls in a target environment during migration.

The descriptions of the various embodiments of the present invention have been presented for purposes of illustration, but are not intended to be exhaustive or limited to the embodiments disclosed. Many modifications and variations will be apparent to those of ordinary skill in the art without departing from the scope and spirit of the described embodiments. The terminology used herein was chosen to best explain the principles of the embodiments, the practical application or technical improvement over technologies found in the marketplace, or to enable others of ordinary skill in the art to understand the embodiments disclosed herein.

Claims

What is claimed is:

1. An article of manufacture comprising a computer readable storage medium having computer readable instructions tangibly embodied thereon which, when implemented, cause a computer to carry out a plurality of method steps comprising:

obtaining at least one communication pattern occurring in a pre-transformation source environment; and

automatically generating one or more vendor-neutral rules for one or more intended firewall interfaces in a post-transformation target environment based on the at least one communication pattern occurring in the source environment and based on information derived from the target environment.

2. The article of manufacture of claim 1, the method steps comprising automatically converting the one or more vendor-neutral rules into one or more vendor-specific firewall rules for the target environment based on information derived from the target environment.

3. The article of manufacture of claim 1, wherein obtaining at least one communication pattern comprises at least one of:

performing an analysis of one or more firewall configuration files associated with the source environment;

observing one or more run-time network flows at the source environment;

analyzing one or more configured dependencies at one or more servers running on the source environment;

analyzing one or more firewall log files; and

using manually provided information about one or more flows at the source environment.

4. The article of manufacture of claim 1, wherein information derived from the target environment used for automatically generating one or more vendor-neutral firewall rules comprises at least one of:

firewall topology;

security zone topology;

security zone contents; and

a new internet protocol (IP) address and subnet information.

5. The article of manufacture of claim 1, wherein obtaining at least one communication pattern comprises obtaining information pertaining to service ports.

6. The article of manufacture of claim 1, wherein automatically generating one or more vendor-neutral rules comprises:

determining whether a communication pattern and/or one or more additional requirements from the target environment are relevant for the one or more firewall interfaces in the target environment; and

automatically generating one or more vendor-neutral per-interface rules for one or more intended interfaces in the target environment based on the at least one communication pattern occurring in the source environment and/or one or more additional requirements from the target environment that are determined relevant for each interface.

7. The article of manufacture of claim 6, wherein automatically generating one or more vendor-neutral per-interface rules for one or more intended interfaces in the target environment comprises generating at least one transformed communication pattern by applying a source environment-target environment IP address or subnet mapping to the at least one communication pattern occurring in the source environment.

8. The article of manufacture of claim 6, wherein automatically generating one or more vendor-neutral per-interface rules for one or more intended interfaces in the target environment comprises incorporating new communication and/or new security requirements from the target environment.

9. The article of manufacture of claim 6, wherein automatically generating one or more vendor-neutral per-interface rules for one or more intended interfaces in the target environment comprises incorporating information pertaining to zone contents and firewall interfaces of the target environment.

10. The article of manufacture of claim 6, wherein automatically generating one or more vendor-neutral per-interface rules for one or more intended interfaces in the target environment comprises applying heuristics and/or user-provided information to identify one or more service ports.

11. The article of manufacture of claim 1, wherein only a subset of devices in the source environment are transformed.

12. The article of manufacture of claim 1, wherein firewall and/or security zone topology in the target environment is partially or fully different from that of the source environment.

13. The article of manufacture of claim 1, wherein one or more devices in the target environment are from a different vendor and/or model and/or platform from one or more devices in the source environment.

14. The article of manufacture of claim 1, wherein one or more firewall devices are physical or virtual devices.

15. The article of manufacture of claim 1, wherein one or more security requirements in the source environment differ from those in the target environment.

16. The article of manufacture of claim 1, wherein one or more connectivity requirements in the source environment differ from those in the target environment.

17. The article of manufacture of claim 1, wherein information derived from the target environment comprises already-implemented vendor-specific firewall rules in the target environment.

18. The article of manufacture of claim 1, wherein automatically generating one or more vendor-neutral rules for one or more intended firewall interfaces in a target environment comprises accounting for one or more rules already implemented for the target environment's firewalls and recommending additions, deletions, and/or updates to the one or more rules.

19. The article of manufacture of claim 1, the method steps comprising automatically generating one or more vendor-specific firewall rules for a target environment during an enterprise information technology transformation activity, wherein an enterprise information technology transformation activity comprises at least one of migration, consolidation, virtualization, data center relocation, and cloudification of at least one application or server or service from a source information technology infrastructure to a target information technology infrastructure.

20. A system for automatically generating one or more rules during IT transformation for configuring one or more firewall interfaces in a post-transformation target environment, comprising:

at least one distinct software module, each distinct software module being embodied on a tangible computer-readable medium;

a memory; and

at least one processor coupled to the memory and operative for:

obtaining at least one communication pattern occurring in a pre-transformation source environment; and

automatically generating one or more vendor-neutral rules for one or more intended firewall interfaces in a post-transformation target environment based on the at least one communication pattern occurring in the source environment and based on information derived from the target environment.

Abstract

A system and computer program product for automatically generating one or more rules during IT transformation for configuring one or more firewall interfaces in a post-transformation target environment include obtaining at least one communication pattern occurring in a pre-transformation source environment, and automatically generating one or more vendor-neutral rules for one or more intended firewall interfaces in a post-transformation target environment based on the at least one communication pattern occurring in the source environment and based on information derived from the target environment.

FIG. 1

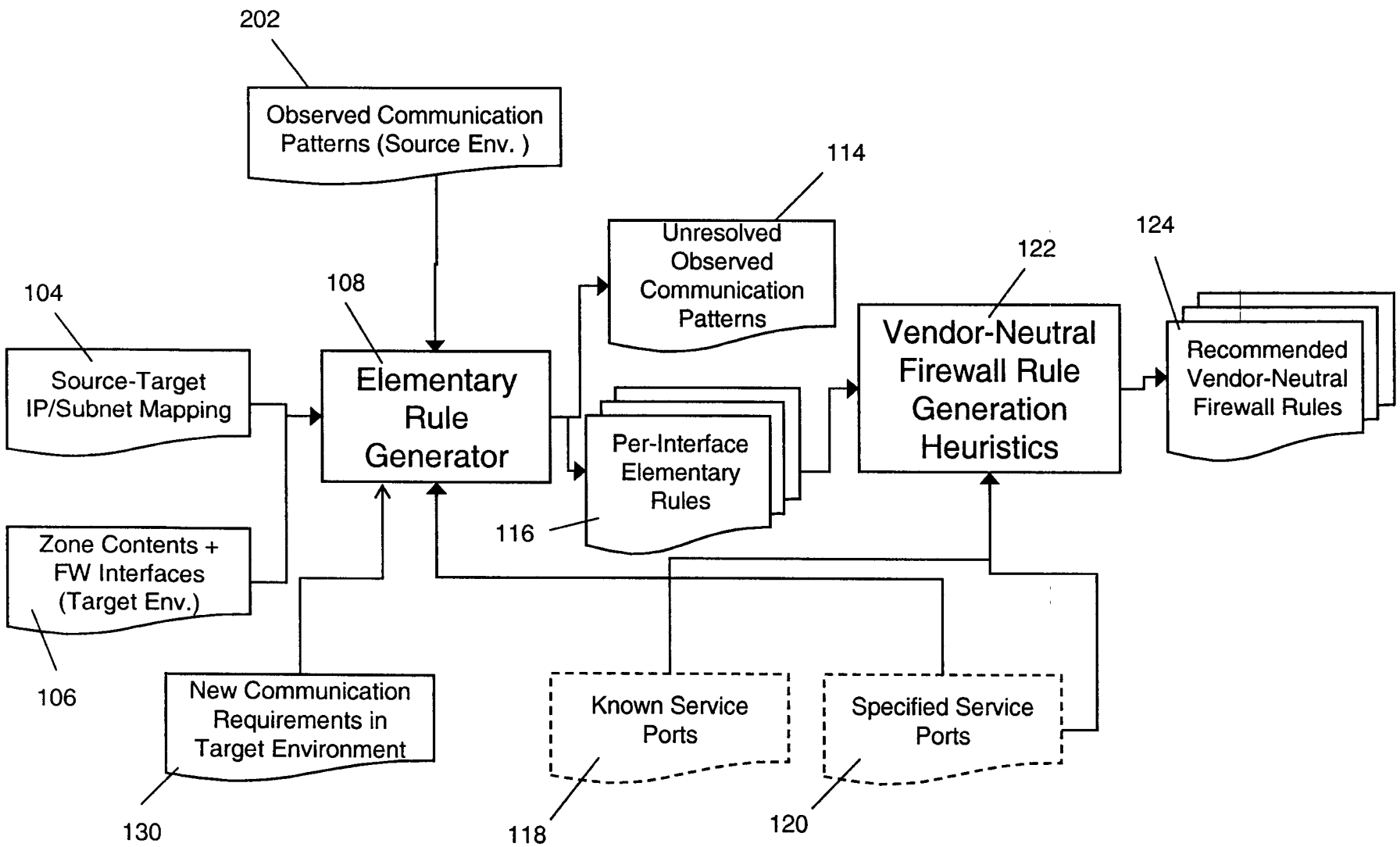
202
Observed Communication Patterns (Source Env.)
114
Unresolved Observed Communication Patterns
124
122
104
108
Source-Target IP/Subnet Mapping
Elementary Rule Generator
Vendor-Neutral Firewall Rule Generation Heuristics
Recommended Vendor-Neutral Firewall Rules
Per-Interface Elementary Rules
116
Zone Contents + FW Interfaces (Target Env.)
106
New Communication Requirements in Target Environment
Known Service Ports
Specified Service Ports
130
118
120

FIG. 2

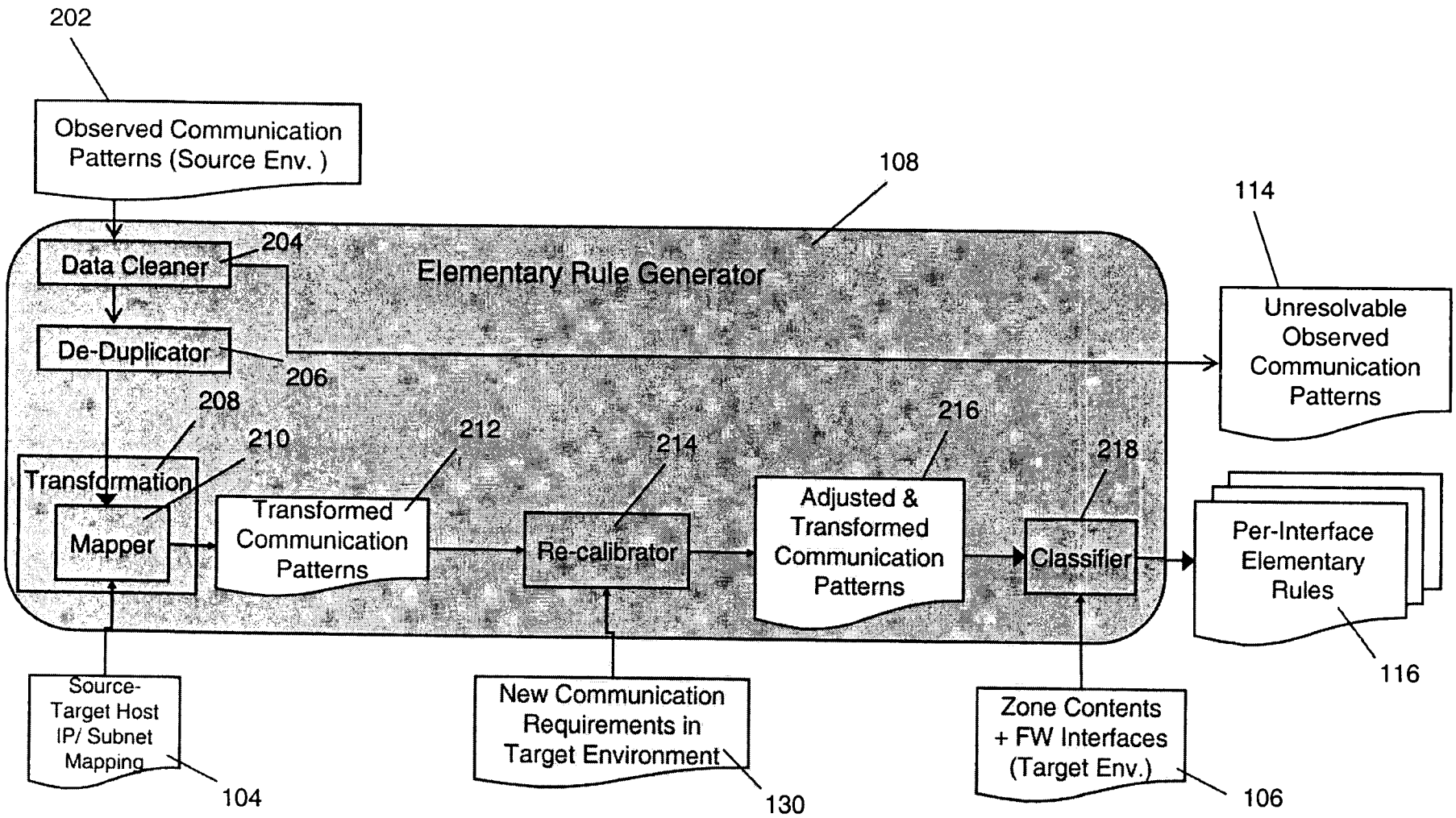
202
Observed Communication Patterns (Source Env.)
108
114
Elementary Rule Generator
Data Cleaner
204
De-Duplicator
206
Unresolvable Observed Communication Patterns
208
210
212
214
216
218
Transformation
Mapper
Transformed Communication Patterns
Re-calibrator
Adjusted & Transformed Communication Patterns
Classifier
Per-Interface Elementary Rules
116
Source-Target Host IP/ Subnet Mapping
104
New Communication Requirements in Target Environment
130
Zone Contents + FW Interfaces (Target Env.)
106

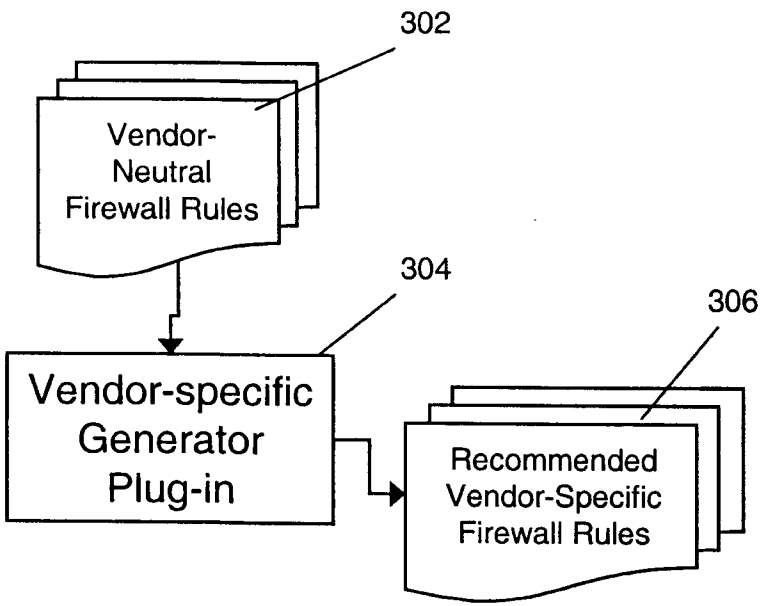
302
Vendor-
Neutral
Firewall Rules
304
Vendor-specific
Generator
Plug-in
306
Recommended
Vendor-Specific
Firewall Rules

FIG. 3

FIG. 4

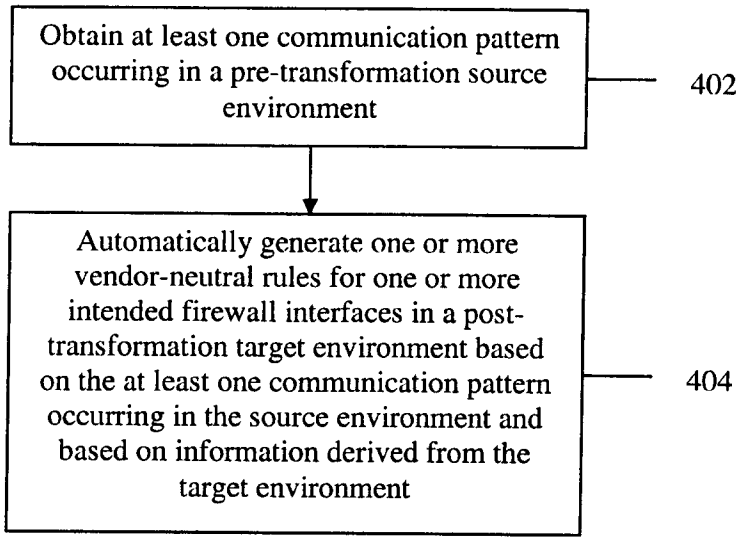
Obtain at least one communication pattern occurring in a pre-transformation source environment
402
Automatically generate one or more vendor-neutral rules for one or more intended firewall interfaces in a post-transformation target environment based on the at least one communication pattern occurring in the source environment and based on information derived from the target environment
404

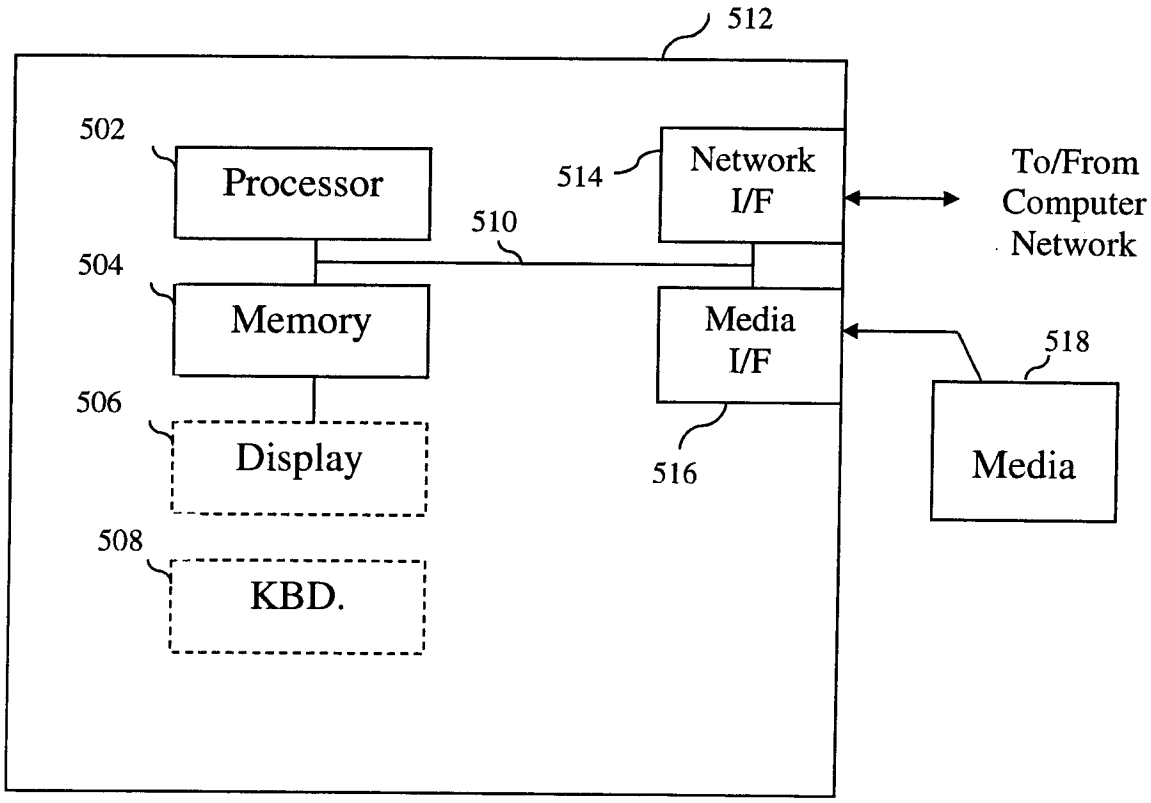
512
502
Processor
514
Network
I/F
To/From
Computer
Network
510
504
Memory
Media
I/F
518
506
Display
516
Media
508
KBD.

FIG. 5

Electronic Patent Application Fee Transmittal

Application Number:	
Filing Date:	
Title of Invention:	Automatically Recommending Firewall Rules During Enterprise Information Technology Transformation
First Named Inventor/Applicant Name:	Nancy L. Burchfield
Filer:	Michael J. Cooper
Attorney Docket Number:	YOR920120481US2

Filed as Large Entity

Utility under 35 USC 111(a) Filing Fees

Description	Fee Code	Quantity	Amount	Sub-Total in USD($)
Basic Filing:				
Utility application filing	1011	1	380	380
Utility Search Fee	1111	1	620	620
Utility Examination Fee	1311	1	250	250
Pages:				
Claims:				
Miscellaneous-Filing:				
Petition:				
Patent-Appeals-and-Interference:				

Description	Fee Code	Quantity	Amount	Sub-Total in USD($)
Post-Allowance-and-Post-Issuance:				
Extension-of-Time:				
Miscellaneous:				
			Total in USD ($)	**1250**

Electronic Acknowledgement Receipt

EFS ID:	13751581
Application Number:	13618298
International Application Number:	
Confirmation Number:	1015
Title of Invention:	Automatically Recommending Firewall Rules During Enterprise Information Technology Transformation
First Named Inventor/Applicant Name:	Nancy L. Burchfield
Customer Number:	48062
Filer:	Michael J. Cooper
Filer Authorized By:	
Attorney Docket Number:	YOR920120481US2
Receipt Date:	14-SEP-2012
Filing Date:	
Time Stamp:	16:35:50
Application Type:	Utility under 35 USC 111(a)

Payment information:

Submitted with Payment	yes
Payment Type	Deposit Account
Payment was successfully received in RAM	$1250
RAM confirmation Number	5321
Deposit Account	500510
Authorized User	

The Director of the USPTO is hereby authorized to charge indicated fees and credit any overpayment as follows:

Charge any Additional Fees required under 37 C.F.R. Section 1.16 (National application filing, search, and examination fees)

Charge any Additional Fees required under 37 C.F.R. Section 1.19 (Document supply fees)

Charge any Additional Fees required under 37 C.F.R. Section 1.21 (Miscellaneous fees and charges)

File Listing:

Document Number	Document Description	File Name	File Size(Bytes)/ Message Digest	Multi Part /.zip	Pages (if appl.)
1	Application Data Sheet	YOR920120481US2_ADS.pdf	1425439 9df14b86c039e06a16062298a401ec5187208ab3	no	5
Warnings:					
Information:					
2	Information Disclosure Statement (IDS) Form (SB08)	YOR920120481US2_IDS.pdf	612847 03f3a427f0db98965b071f7bbcff455cff826db4	no	6
Warnings:					
Information:					
A U.S. Patent Number Citation or a U.S. Publication Number Citation is required in the Information Disclosure Statement (IDS) form for autoloading of data into USPTO systems. You may remove the form to add the required data in order to correct the Informational Message if you are citing U.S. References. If you chose not to include U.S. References, the image of the form will be processed and be made available within the Image File Wrapper (IFW) system. However, no data will be extracted from this form. Any additional data such as Foreign Patent Documents or Non Patent Literature will be manually reviewed and keyed into USPTO systems.					
3		YOR920120481US2_ApplicationasFiledPkg_09142012.pdf	3497987 24397fff5db3a4a4d20b3eefc041e0576fdcacbf	yes	43

Multipart Description/PDF files in .zip description

Document Description	Start	End
Transmittal of New Application	1	2
Oath or Declaration filed	3	9
Specification	10	32
Claims	33	37
Abstract	38	38
Drawings-only black and white line drawings	39	43

Warnings:					
Information:					
4	Fee Worksheet (SB06)	fee-info.pdf	33044 edcaa6c806fd9a8951185b583757efed3bfea496	no	2
Warnings:					
Information:					
			Total Files Size (in bytes):	5569317	

This Acknowledgement Receipt evidences receipt on the noted date by the USPTO of the indicated documents, characterized by the applicant, and including page counts, where applicable. It serves as evidence of receipt similar to a Post Card, as described in MPEP 503.

New Applications Under 35 U.S.C. 111
If a new application is being filed and the application includes the necessary components for a filing date (see 37 CFR 1.53(b)-(d) and MPEP 506), a Filing Receipt (37 CFR 1.54) will be issued in due course and the date shown on this Acknowledgement Receipt will establish the filing date of the application.

National Stage of an International Application under 35 U.S.C. 371
If a timely submission to enter the national stage of an international application is compliant with the conditions of 35 U.S.C. 371 and other applicable requirements a Form PCT/DO/EO/903 indicating acceptance of the application as a national stage submission under 35 U.S.C. 371 will be issued in addition to the Filing Receipt, in due course.

New International Application Filed with the USPTO as a Receiving Office
If a new international application is being filed and the international application includes the necessary components for an international filing date (see PCT Article 11 and MPEP 1810), a Notification of the International Application Number and of the International Filing Date (Form PCT/RO/105) will be issued in due course, subject to prescriptions concerning national security, and the date shown on this Acknowledgement Receipt will establish the international filing date of the application.

Under the Paperwork Reduction Act of 1995, no persons are required to respond to a collection of information unless it contains a valid OMB control number.

Application Data Sheet 37 CFR 1.76	Attorney Docket Number	YOR920120481US2
	Application Number	
Title of Invention	Automatically Recommending Firewall Rules During Enterprise Information Technology Transformation	

The application data sheet is part of the provisional or nonprovisional application for which it is being submitted. The following form contains the bibliographic data arranged in a format specified by the United States Patent and Trademark Office as outlined in 37 CFR 1.76.
This document may be completed electronically and submitted to the Office in electronic format using the Electronic Filing System (EFS) or the document may be printed and included in a paper filed application.

Secrecy Order 37 CFR 5.2

☐ Portions or all of the application associated with this Application Data Sheet may fall under a Secrecy Order pursuant to 37 CFR 5.2 (Paper filers only. Applications that fall under Secrecy Order may not be filed electronically.)

Applicant Information:

Applicant 1 Remove

Applicant Authority ◉ Inventor ◯ Legal Representative under 35 U.S.C. 117 ◯ Party of Interest under 35 U.S.C. 118

Prefix	Given Name	Middle Name	Family Name	Suffix
	Nancy	L.	Burchfield	

Residence Information (Select One) ◉ US Residency ◯ Non US Residency ◯ Active US Military Service

City	Dana Point	State/Province	CA	Country of Residence i	US

Citizenship under 37 CFR 1.41(b) i US

Mailing Address of Applicant:

Address 1	IBM Corporation
Address 2	600 Anton Boulevard
City	Costa Mesa
State/Province	CA
Postal Code	92626
Country i	US

Applicant 2 Remove

Applicant Authority ◉ Inventor ◯ Legal Representative under 35 U.S.C. 117 ◯ Party of Interest under 35 U.S.C. 118

Prefix	Given Name	Middle Name	Family Name	Suffix
	Nathaniel		Hang	

Residence Information (Select One) ◉ US Residency ◯ Non US Residency ◯ Active US Military Service

City	Ladera Ranch	State/Province	CA	Country of Residence i	US

Citizenship under 37 CFR 1.41(b) i US

Mailing Address of Applicant:

Address 1	IBM Corporation
Address 2	600 Anton Boulevard
City	Costa Mesa
State/Province	CA
Postal Code	92626
Country i	US

Applicant 3 Remove

Applicant Authority ◉ Inventor ◯ Legal Representative under 35 U.S.C. 117 ◯ Party of Interest under 35 U.S.C. 118

Prefix	Given Name	Middle Name	Family Name	Suffix
	Rafah	A.	Hosn	

Residence Information (Select One) ◉ US Residency ◯ Non US Residency ◯ Active US Military Service

City	New York	State/Province	NY	Country of Residence i	US

Under the Paperwork Reduction Act of 1995, no persons are required to respond to a collection of information unless it contains a valid OMB control number.

Application Data Sheet 37 CFR 1.76	Attorney Docket Number	YOR920120481US2
	Application Number	
Title of Invention	Automatically Recommending Firewall Rules During Enterprise Information Technology Transformation	

Citizenship under 37 CFR 1.41(b) i	CA		
Mailing Address of Applicant:			
Address 1	IBM T.J. Watson Research Center		
Address 2	19 Skyline Drive		
City	Hawthorne	**State/Province**	NY
Postal Code	10532	**Country**i	US

Applicant 4 Remove

Applicant Authority ◉ Inventor	◯ Legal Representative under 35 U.S.C. 117	◯ Party of Interest under 35 U.S.C. 118		
Prefix	**Given Name**	**Middle Name**	**Family Name**	**Suffix**
	James	W.	Murray	
Residence Information (Select One)	◉ US Residency	◯ Non US Residency	◯ Active US Military Service	
City	Durham	**State/Province**	NC	**Country of Residence** i US
Citizenship under 37 CFR 1.41(b) i	US			
Mailing Address of Applicant:				
Address 1	IBM Corporation			
Address 2	002/H106, P.O. Box 12195			
City	Research Triangle Park	**State/Province**	NC	
Postal Code	27707	**Country**i	US	

Applicant 5 Remove

Applicant Authority ◉ Inventor	◯ Legal Representative under 35 U.S.C. 117	◯ Party of Interest under 35 U.S.C. 118		
Prefix	**Given Name**	**Middle Name**	**Family Name**	**Suffix**
	Harigovind	V.	Ramasamy	
Residence Information (Select One)	◉ US Residency	◯ Non US Residency	◯ Active US Military Service	
City	Ossining	**State/Province**	NY	**Country of Residence** i US
Citizenship under 37 CFR 1.41(b) i	US			
Mailing Address of Applicant:				
Address 1	IBM T. J. Watson Research Center			
Address 2	19 Skyline Drive			
City	Hawthorne	**State/Province**	NY	
Postal Code	10532	**Country**i	US	

All Inventors Must Be Listed - Additional Inventor Information blocks may be generated within this form by selecting the **Add** button. Add

Correspondence Information:

Enter either Customer Number or complete the Correspondence Information section below.
For further information see 37 CFR 1.33(a).

☐ **An Address is being provided for the correspondence Information of this application.**

Customer Number	48062

Under the Paperwork Reduction Act of 1995, no persons are required to respond to a collection of information unless it contains a valid OMB control number.

Application Data Sheet 37 CFR 1.76	Attorney Docket Number	YOR920120481US2
	Application Number	
Title of Invention	Automatically Recommending Firewall Rules During Enterprise Information Technology Transformation	

Email Address		Add Email	Remove Email

Application Information:

Title of the Invention	Automatically Recommending Firewall Rules During Enterprise Information Technology Transformation		
Attorney Docket Number	YOR920120481US2	**Small Entity Status Claimed**	☐
Application Type	Nonprovisional		
Subject Matter	Utility		
Suggested Class (if any)		**Sub Class (if any)**	
Suggested Technology Center (if any)			
Total Number of Drawing Sheets (if any)	5	**Suggested Figure for Publication (if any)**	

Publication Information:

☐ Request Early Publication (Fee required at time of Request 37 CFR 1.219)

☐ **Request Not to Publish.** I hereby request that the attached application not be published under 35 U.S. C. 122(b) and certify that the invention disclosed in the attached application **has not and will not** be the subject of an application filed in another country, or under a multilateral international agreement, that requires publication at eighteen months after filing.

Representative Information:

Representative information should be provided for all practitioners having a power of attorney in the application. Providing this information in the Application Data Sheet does not constitute a power of attorney in the application (see 37 CFR 1.32).
Enter either Customer Number or complete the Representative Name section below. If both sections are completed the Customer Number will be used for the Representative Information during processing.

Please Select One:	◉ Customer Number	◯ US Patent Practitioner	◯ Limited Recognition (37 CFR 11.9)
Customer Number	48062		

Domestic Benefit/National Stage Information:

This section allows for the applicant to either claim benefit under 35 U.S.C. 119(e), 120, 121, or 365(c) or indicate National Stage entry from a PCT application. Providing this information in the application data sheet constitutes the specific reference required by 35 U.S.C. 119(e) or 120, and 37 CFR 1.78(a)(2) or CFR 1.78(a)(4), and need not otherwise be made part of the specification.

Prior Application Status	Pending		Remove
Application Number	Continuity Type	Prior Application Number	Filing Date (YYYY-MM-DD)
	Continuation of	13600891	2012-08-31

Additional Domestic Benefit/National Stage Data may be generated within this form by selecting the **Add** button. Add

Foreign Priority Information:

Under the Paperwork Reduction Act of 1995, no persons are required to respond to a collection of information unless it contains a valid OMB control number.

Application Data Sheet 37 CFR 1.76	Attorney Docket Number	YOR920120481US2
	Application Number	
Title of Invention	Automatically Recommending Firewall Rules During Enterprise Information Technology Transformation	

This section allows for the applicant to claim benefit of foreign priority and to identify any prior foreign application for which priority is not claimed. Providing this information in the application data sheet constitutes the claim for priority as required by 35 U.S.C. 119(b) and 37 CFR 1.55(a).

Remove

Application Number	Country [i]	Parent Filing Date (YYYY-MM-DD)	Priority Claimed
			◉ Yes ◯ No

Additional Foreign Priority Data may be generated within this form by selecting the **Add** button. Add

Assignee Information:

Providing this information in the application data sheet does not substitute for compliance with any requirement of part 3 of Title 37 of the CFR to have an assignment recorded in the Office.

Assignee 1 Remove

If the Assignee is an Organization check here. ☒

Organization Name	International Business Machines Corporation		
Mailing Address Information:			
Address 1	New Orchard Road		
Address 2			
City	Armonk	**State/Province**	NY
Country [i]	US	Postal Code	10504
Phone Number		Fax Number	
Email Address			

Additional Assignee Data may be generated within this form by selecting the **Add** button. Add

Signature:

A signature of the applicant or representative is required in accordance with 37 CFR 1.33 and 10.18. Please see 37 CFR 1.4(d) for the form of the signature.

Signature	/Michael J. Cooper/			Date (YYYY-MM-DD)	2012-09-14
First Name	Michael	Last Name	Cooper	Registration Number	57749

This collection of information is required by 37 CFR 1.76. The information is required to obtain or retain a benefit by the public which is to file (and by the USPTO to process) an application. Confidentiality is governed by 35 U.S.C. 122 and 37 CFR 1.14. This collection is estimated to take 23 minutes to complete, including gathering, preparing, and submitting the completed application data sheet form to the USPTO. Time will vary depending upon the individual case. Any comments on the amount of time you require to complete this form and/or suggestions for reducing this burden, should be sent to the Chief Information Officer, U.S. Patent and Trademark Office, U.S. Department of Commerce, P.O. Box 1450, Alexandria, VA 22313-1450. DO NOT SEND FEES OR COMPLETED FORMS TO THIS ADDRESS. **SEND TO: Commissioner for Patents, P.O. Box 1450, Alexandria, VA 22313-1450.**

Privacy Act Statement

The Privacy Act of 1974 (P.L. 93-579) requires that you be given certain information in connection with your submission of the attached form related to a patent application or patent. Accordingly, pursuant to the requirements of the Act, please be advised that: (1) the general authority for the collection of this information is 35 U.S.C. 2(b)(2); (2) furnishing of the information solicited is voluntary; and (3) the principal purpose for which the information is used by the U.S. Patent and Trademark Office is to process and/or examine your submission related to a patent application or patent. If you do not furnish the requested information, the U.S. Patent and Trademark Office may not be able to process and/or examine your submission, which may result in termination of proceedings or abandonment of the application or expiration of the patent.

The information provided by you in this form will be subject to the following routine uses:

1. The information on this form will be treated confidentially to the extent allowed under the Freedom of Information Act (5 U.S.C. 552) and the Privacy Act (5 U.S.C. 552a). Records from this system of records may be disclosed to the Department of Justice to determine whether the Freedom of Information Act requires disclosure of these records.

2. A record from this system of records may be disclosed, as a routine use, in the course of presenting evidence to a court, magistrate, or administrative tribunal, including disclosures to opposing counsel in the course of settlement negotiations.

3. A record in this system of records may be disclosed, as a routine use, to a Member of Congress submitting a request involving an individual, to whom the record pertains, when the individual has requested assistance from the Member with respect to the subject matter of the record.

4. A record in this system of records may be disclosed, as a routine use, to a contractor of the Agency having need for the information in order to perform a contract. Recipients of information shall be required to comply with the requirements of the Privacy Act of 1974, as amended, pursuant to 5 U.S.C. 552a(m).

5. A record related to an International Application filed under the Patent Cooperation Treaty in this system of records may be disclosed, as a routine use, to the International Bureau of the World Intellectual Property Organization, pursuant to the Patent Cooperation Treaty.

6. A record in this system of records may be disclosed, as a routine use, to another federal agency for purposes of National Security review (35 U.S.C. 181) and for review pursuant to the Atomic Energy Act (42 U.S.C. 218(c)).

7. A record from this system of records may be disclosed, as a routine use, to the Administrator, General Services, or his/her designee, during an inspection of records conducted by GSA as part of that agency's responsibility to recommend improvements in records management practices and programs, under authority of 44 U.S.C. 2904 and 2906. Such disclosure shall be made in accordance with the GSA regulations governing inspection of records for this purpose, and any other relevant (i.e., GSA or Commerce) directive. Such disclosure shall not be used to make determinations about individuals.

8. A record from this system of records may be disclosed, as a routine use, to the public after either publication of the application pursuant to 35 U.S.C. 122(b) or issuance of a patent pursuant to 35 U.S.C. 151. Further, a record may be disclosed, subject to the limitations of 37 CFR 1.14, as a routine use, to the public if the record was filed in an application which became abandoned or in which the proceedings were terminated and which application is referenced by either a published application, an application open to public inspections or an issued patent.

9. A record from this system of records may be disclosed, as a routine use, to a Federal, State, or local law enforcement agency, if the USPTO becomes aware of a violation or potential violation of law or regulation.

PTO/SB/08a (01-10)
Approved for use through 07/31/2012. OMB 0651-0031
U.S. Patent and Trademark Office; U.S. DEPARTMENT OF COMMERCE

Under the Paperwork Reduction Act of 1995, no persons are required to respond to a collection of information unless it contains a valid OMB control number.

INFORMATION DISCLOSURE STATEMENT BY APPLICANT

(Not for submission under 37 CFR 1.99)

Application Number	
Filing Date	2012-09-14
First Named Inventor	Nancy Burchfield et al.
Art Unit	TBD
Examiner Name	TBD
Attorney Docket Number	YOR920120481US2

U.S.PATENTS Remove

Examiner Initial*	Cite No	Patent Number	Kind Code[1]	Issue Date	Name of Patentee or Applicant of cited Document	Pages,Columns,Lines where Relevant Passages or Relevant Figures Appear
	1					

If you wish to add additional U.S. Patent citation information please click the Add button. Add

U.S.PATENT APPLICATION PUBLICATIONS Remove

Examiner Initial*	Cite No	Publication Number	Kind Code[1]	Publication Date	Name of Patentee or Applicant of cited Document	Pages,Columns,Lines where Relevant Passages or Relevant Figures Appear
	1					

If you wish to add additional U.S. Published Application citation information please click the Add button. Add

FOREIGN PATENT DOCUMENTS Remove

Examiner Initial*	Cite No	Foreign Document Number[3]	Country Code[2] ¡	Kind Code[4]	Publication Date	Name of Patentee or Applicant of cited Document	Pages,Columns,Lines where Relevant Passages or Relevant Figures Appear	T[5]
	1							☐

If you wish to add additional Foreign Patent Document citation information please click the Add button Add

NON-PATENT LITERATURE DOCUMENTS Remove

Examiner Initials*	Cite No	Include name of the author (in CAPITAL LETTERS), title of the article (when appropriate), title of the item (book, magazine, journal, serial, symposium, catalog, etc), date, pages(s), volume-issue number(s), publisher, city and/or country where published.	T[5]

INFORMATION DISCLOSURE STATEMENT BY APPLICANT (Not for submission under 37 CFR 1.99)	Application Number	
	Filing Date	2012-09-14
	First Named Inventor	Nancy Burchfield et al.
	Art Unit	TBD
	Examiner Name	TBD
	Attorney Docket Number	YOR920120481US2

	1	ABASSI et al., A Model for Specification and Validation of Security Policies in Communication Networks: The Firewall Case, 2008.	☐
	2	ABASSI et al., Towards an Automated Firewall Security Policies Validation Process, 2008.	☐
	3	ADEL et al., Policy Segmentation for Intelligent Firewall Testing, 2005.	☐
	4	AL-HAJ et al., Measuring Firewall Security, 2011.	☐
	5	AL-SHAER et al., Conflict Classification and Analysis of Distributed Firewall Policies, 2005.	☐
	6	AL-SHAER et al., Firewall Policy Advisor for Anomaly Discovery and Rule Editing, 2003.	☐
	7	AL-SHAER et al., Management and Translation of Filtering Security Policies, 2003.	☐
	8	AL-SHAER et al., Discovery of Policy Anomalies in Distributed Firewalls, 2004.	☐
	9	AL-SHAER et al., Modeling and Management of Firewall Policies, 2004.	☐
	10	Youssef et al., Systematic Deployment of Network Security Policy in Centralized and Distributed Firewalls, 2011.	☐
	11	EL-ATAWY et al., An Automated Framework for Validating Firewall Policy Enforcement, 2007.	☐

INFORMATION DISCLOSURE STATEMENT BY APPLICANT (Not for submission under 37 CFR 1.99)	Application Number	
	Filing Date	2012-09-14
	First Named Inventor	Nancy Burchfield et al.
	Art Unit	TBD
	Examiner Name	TBD
	Attorney Docket Number	YOR920120481US2

	12	GOLNABI et al., Analysis of Firewall Policy Rules Using Data Mining Technique, 2006.	☐
	13	HAMED et al. Taxonomy of Conflicts in Network Security Policies, 2006.	☐
	14	HASSAN, Algorithms for Verifying Firewall and Router Access Lists, 2003.	☐
	15	HASSAN et al., A Framework for Translating a High Level Security Policy Into Low Level Security Mechanisms, 2009.	☐
	16	KOTENKO et al., Verification of Security Policy Filtering Rules by Model Checking, 2011.	☐
	17	LIU et al., Firewall Policy Queries, 2009.	☐
	18	MAYER et al., Fang: a Firewall Analysis Engine, 2000.	☐
	19	RAHMAN et al., A Declarative Approach for Global Network Security Configuration Verification and Evaluation, 2011.	☐
	20	SALAH et al., A Probing Technique for Discovering Last-Matching Rules of a Network Firewall, 2008.	☐
	21	YI et al., Inconsistency Detection System for Security Policy and Firewall Policy, 2010.	☐
	22	YIWEN et al., Verify Consistency Between Security Policy and Firewall Policy with Answer Set Programming, 2008.	☐

INFORMATION DISCLOSURE STATEMENT BY APPLICANT (Not for submission under 37 CFR 1.99)	Application Number	
	Filing Date	2012-09-14
	First Named Inventor	Nancy Burchfield et al.
	Art Unit	TBD
	Examiner Name	TBD
	Attorney Docket Number	YOR920120481US2

If you wish to add additional non-patent literature document citation information please click the Add button			Add
EXAMINER SIGNATURE			
Examiner Signature		Date Considered	

*EXAMINER: Initial if reference considered, whether or not citation is in conformance with MPEP 609. Draw line through a citation if not in conformance and not considered. Include copy of this form with next communication to applicant.

[1] See Kind Codes of USPTO Patent Documents at www.USPTO.GOV or MPEP 901.04. [2] Enter office that issued the document, by the two-letter code (WIPO Standard ST.3). [3] For Japanese patent documents, the indication of the year of the reign of the Emperor must precede the serial number of the patent document. [4] Kind of document by the appropriate symbols as indicated on the document under WIPO Standard ST.16 if possible. [5] Applicant is to place a check mark here if English language translation is attached.

INFORMATION DISCLOSURE STATEMENT BY APPLICANT (Not for submission under 37 CFR 1.99)	Application Number	
	Filing Date	2012-09-14
	First Named Inventor	Nancy Burchfield et al.
	Art Unit	TBD
	Examiner Name	TBD
	Attorney Docket Number	YOR920120481US2

CERTIFICATION STATEMENT

Please see 37 CFR 1.97 and 1.98 to make the appropriate selection(s):

☐ That each item of information contained in the information disclosure statement was first cited in any communication from a foreign patent office in a counterpart foreign application not more than three months prior to the filing of the information disclosure statement. See 37 CFR 1.97(e)(1).

OR

☐ That no item of information contained in the information disclosure statement was cited in a communication from a foreign patent office in a counterpart foreign application, and, to the knowledge of the person signing the certification after making reasonable inquiry, no item of information contained in the information disclosure statement was known to any individual designated in 37 CFR 1.56(c) more than three months prior to the filing of the information disclosure statement. See 37 CFR 1.97(e)(2).

☐ See attached certification statement.

☐ The fee set forth in 37 CFR 1.17 (p) has been submitted herewith.

☒ A certification statement is not submitted herewith.

SIGNATURE

A signature of the applicant or representative is required in accordance with CFR 1.33, 10.18. Please see CFR 1.4(d) for the form of the signature.

Signature	/Michael J. Cooper/	Date (YYYY-MM-DD)	2012-09-14
Name/Print	Michael J. Cooper	Registration Number	57749

This collection of information is required by 37 CFR 1.97 and 1.98. The information is required to obtain or retain a benefit by the public which is to file (and by the USPTO to process) an application. Confidentiality is governed by 35 U.S.C. 122 and 37 CFR 1.14. This collection is estimated to take 1 hour to complete, including gathering, preparing and submitting the completed application form to the USPTO. Time will vary depending upon the individual case. Any comments on the amount of time you require to complete this form and/or suggestions for reducing this burden, should be sent to the Chief Information Officer, U.S. Patent and Trademark Office, U.S. Department of Commerce, P.O. Box 1450, Alexandria, VA 22313-1450. DO NOT SEND FEES OR COMPLETED FORMS TO THIS ADDRESS. **SEND TO: Commissioner for Patents, P.O. Box 1450, Alexandria, VA 22313-1450.**

Privacy Act Statement

The Privacy Act of 1974 (P.L. 93-579) requires that you be given certain information in connection with your submission of the attached form related to a patent application or patent. Accordingly, pursuant to the requirements of the Act, please be advised that: (1) the general authority for the collection of this information is 35 U.S.C. 2(b)(2); (2) furnishing of the information solicited is voluntary; and (3) the principal purpose for which the information is used by the U.S. Patent and Trademark Office is to process and/or examine your submission related to a patent application or patent. If you do not furnish the requested information, the U.S. Patent and Trademark Office may not be able to process and/or examine your submission, which may result in termination of proceedings or abandonment of the application or expiration of the patent.

The information provided by you in this form will be subject to the following routine uses:

1. The information on this form will be treated confidentially to the extent allowed under the Freedom of Information Act (5 U.S.C. 552) and the Privacy Act (5 U.S.C. 552a). Records from this system of records may be disclosed to the Department of Justice to determine whether the Freedom of Information Act requires disclosure of these record s.

2. A record from this system of records may be disclosed, as a routine use, in the course of presenting evidence to a court, magistrate, or administrative tribunal, including disclosures to opposing counsel in the course of settlement negotiations.

3. A record in this system of records may be disclosed, as a routine use, to a Member of Congress submitting a request involving an individual, to whom the record pertains, when the individual has requested assistance from the Member with respect to the subject matter of the record.

4. A record in this system of records may be disclosed, as a routine use, to a contractor of the Agency having need for the information in order to perform a contract. Recipients of information shall be required to comply with the requirements of the Privacy Act of 1974, as amended, pursuant to 5 U.S.C. 552a(m).

5. A record related to an International Application filed under the Patent Cooperation Treaty in this system of records may be disclosed, as a routine use, to the International Bureau of the World Intellectual Property Organization, pursuant to the Patent Cooperation Treaty.

6. A record in this system of records may be disclosed, as a routine use, to another federal agency for purposes of National Security review (35 U.S.C. 181) and for review pursuant to the Atomic Energy Act (42 U.S.C. 218(c)).

7. A record from this system of records may be disclosed, as a routine use, to the Administrator, General Services, or his/her designee, during an inspection of records conducted by GSA as part of that agency's responsibility to recommend improvements in records management practices and programs, under authority of 44 U.S.C. 2904 and 2906. Such disclosure shall be made in accordance with the GSA regulations governing inspection of records for this purpose, and any other relevant (i.e., GSA or Commerce) directive. Such disclosure shall not be used to make determinations about individuals.

8. A record from this system of records may be disclosed, as a routine use, to the public after either publication of the application pursuant to 35 U.S.C. 122(b) or issuance of a patent pursuant to 35 U.S.C. 151. Further, a record may be disclosed, subject to the limitations of 37 CFR 1.14, as a routine use, to the public if the record was filed in an application which became abandoned or in which the proceedings were terminated and which application is referenced by either a published application, an application open to public inspections or an issued patent.

9. A record from this system of records may be disclosed, as a routine use, to a Federal, State, or local law enforcement agency, if the USPTO becomes aware of a violation or potential violation of law or regulation.

Docket No. YOR920120481US2
Customer No. 48062

PARENT STATUS AND LOCATION: PENDING, GROUP ART UNIT TBD
PARENT SERIAL NO.: 13/600,891
EXAMINER: TBD

IN THE UNITED STATES PATENT AND TRADEMARK OFFICE

Patent Application

Applicant(s) Nancy Burchfield
Nathaniel Hang
Rafah A. Hosn
James Murray
Harigovind V. Ramasamy

Docket No.: YOR920120481US2
Serial No.: Unassigned
Assignee Name: International Business Machines Corporation
Assignee Address: Armonk, New York

Title: Automatically Recommending Firewall Rules During Enterprise Information Technology Transformation

---

Commissioner for Patents
P.O. Box 1450
Alexandria, VA 22313-1450

Sir:

The above-named application is a continuation application under 37 CFR §1.53(b) of pending U.S. application Serial No. 13/600,891. Enclosed are the following papers relating to the application:

1. New specification
2. 5 sheets of informal Drawings
3. Copy of signed Declaration and Power of Attorney from prior application
4. Application Data Sheet
5. Information Disclosure Statement

CLAIMS AS FILED				
	NO. FILED	NO. EXTRA	RATE	CALCULATIONS
Total Claims	20 – 20 =	0	x $60 =	$0
Independent Claims	2 - 3 =	0	x $250 =	$0
Multiple Dependent Claim(s), if applicable			$ 450	$0
Basic Filing Fee			$380	$380
Search Fee			$620	$620
Examination Fee			$250	$250
Application Size Fee (for each additional 50 sheets that exceeds 100 sheets)			$310	
			TOTAL FEE:	$1,250

1. This application is being filed by all the inventors named in the prior application.
2. The prior application is assigned of record to International Business Machines, Inc.
3. Please file the application. In the event of non-payment or improper payment of a required fee, the Commissioner is authorized to charge or to credit **Deposit Account No. 50-0510** as required to correct the error.

Please associate this application with Customer No. 48062.

Please address all correspondence to: Customer No. 48062.

Respectfully submitted,

Date: September 14, 2012

Michael J. Cooper
Attorney for Applicants
Reg. No. 57,749
Ryan, Mason & Lewis, LLP
1300 Post Road, Suite 205
Fairfield, CT 06824
(203) 255-6560

PATENT APPLICATION FEE DETERMINATION RECORD

Substitute for Form PTO-875

Application or Docket Number
13/618,298

APPLICATION AS FILED - PART I

FOR	(Column 1) NUMBER FILED	(Column 2) NUMBER EXTRA	SMALL ENTITY RATE($)	SMALL ENTITY FEE($)	OR	OTHER THAN SMALL ENTITY RATE($)	OTHER THAN SMALL ENTITY FEE($)
BASIC FEE (37 CFR 1.16(a), (b), or (c))	N/A	N/A	N/A			N/A	380
SEARCH FEE (37 CFR 1.16(k), (i), or (m))	N/A	N/A	N/A			N/A	620
EXAMINATION FEE (37 CFR 1.16(o), (p), or (q))	N/A	N/A	N/A			N/A	250
TOTAL CLAIMS (37 CFR 1.16(i))	20 minus 20 =	*			OR	x 60 =	0.00
INDEPENDENT CLAIMS (37 CFR 1.16(h))	2 minus 3 =	*				x 250 =	0.00
APPLICATION SIZE FEE (37 CFR 1.16(s))	If the specification and drawings exceed 100 sheets of paper, the application size fee due is $310 ($155 for small entity) for each additional 50 sheets or fraction thereof. See 35 U.S.C. 41(a)(1)(G) and 37 CFR 1.16(s).						0.00
MULTIPLE DEPENDENT CLAIM PRESENT (37 CFR 1.16(j))							0.00
* If the difference in column 1 is less than zero, enter "0" in column 2.			TOTAL			TOTAL	1250

APPLICATION AS AMENDED - PART II

		(Column 1) CLAIMS REMAINING AFTER AMENDMENT		(Column 2) HIGHEST NUMBER PREVIOUSLY PAID FOR	(Column 3) PRESENT EXTRA	SMALL ENTITY RATE($)	SMALL ENTITY ADDITIONAL FEE($)	OR	OTHER THAN SMALL ENTITY RATE($)	OTHER THAN SMALL ENTITY ADDITIONAL FEE($)
AMENDMENT A	Total (37 CFR 1.16(i))	*	Minus	**	=	x =		OR	x =	
AMENDMENT A	Independent (37 CFR 1.16(h))	*	Minus	***	=	x =		OR	x =	
AMENDMENT A	Application Size Fee (37 CFR 1.16(s))									
AMENDMENT A	FIRST PRESENTATION OF MULTIPLE DEPENDENT CLAIM (37 CFR 1.16(j))							OR		
						TOTAL ADD'L FEE		OR	TOTAL ADD'L FEE	

		(Column 1) CLAIMS REMAINING AFTER AMENDMENT		(Column 2) HIGHEST NUMBER PREVIOUSLY PAID FOR	(Column 3) PRESENT EXTRA	RATE($)	ADDITIONAL FEE($)	OR	RATE($)	ADDITIONAL FEE($)
AMENDMENT B	Total (37 CFR 1.16(i))	*	Minus	**	=	x =		OR	x =	
AMENDMENT B	Independent (37 CFR 1.16(h))	*	Minus	***	=	x =		OR	x =	
AMENDMENT B	Application Size Fee (37 CFR 1.16(s))									
AMENDMENT B	FIRST PRESENTATION OF MULTIPLE DEPENDENT CLAIM (37 CFR 1.16(j))							OR		
						TOTAL ADD'L FEE		OR	TOTAL ADD'L FEE	

* If the entry in column 1 is less than the entry in column 2, write "0" in column 3.
** If the "Highest Number Previously Paid For" IN THIS SPACE is less than 20, enter "20".
*** If the "Highest Number Previously Paid For" IN THIS SPACE is less than 3, enter "3".
The "Highest Number Previously Paid For" (Total or Independent) is the highest found in the appropriate box in column 1.

UNITED STATES PATENT AND TRADEMARK OFFICE

UNITED STATES DEPARTMENT OF COMMERCE
United States Patent and Trademark Office
Address: COMMISSIONER FOR PATENTS
P.O. Box 1450
Alexandria, Virginia 22313-1450
www.uspto.gov

APPLICATION NUMBER	FILING or 371(c) DATE	GRP ART UNIT	FIL FEE REC'D	ATTY.DOCKET.NO	TOT CLAIMS	IND CLAIMS
13/618,298	09/14/2012	1638	1250	YOR920120481US2	20	2

CONFIRMATION NO. 1015

48062
RYAN, MASON & LEWIS, LLP
1300 POST ROAD
SUITE 205
FAIRFIELD, CT 06824

FILING RECEIPT

OC000000056847067

Date Mailed: 10/03/2012

Receipt is acknowledged of this non-provisional patent application. The application will be taken up for examination in due course. Applicant will be notified as to the results of the examination. Any correspondence concerning the application must include the following identification information: the U.S. APPLICATION NUMBER, FILING DATE, NAME OF APPLICANT, and TITLE OF INVENTION. Fees transmitted by check or draft are subject to collection. Please verify the accuracy of the data presented on this receipt. **If an error is noted on this Filing Receipt, please submit a written request for a Filing Receipt Correction. Please provide a copy of this Filing Receipt with the changes noted thereon. If you received a "Notice to File Missing Parts" for this application, please submit any corrections to this Filing Receipt with your reply to the Notice. When the USPTO processes the reply to the Notice, the USPTO will generate another Filing Receipt incorporating the requested corrections**

Inventor(s)

Nancy Burchfield, Dana Point, CA;
Nathaniel Hang, Ladera Ranch, CA;
Rafah A. Hosn, New York, NY;
James Murray, Durham, NC;
Harigovind V. Ramasamy, Ossining, NY;

Applicant(s)

Nancy Burchfield, Dana Point, CA;
Nathaniel Hang, Ladera Ranch, CA;
Rafah A. Hosn, New York, NY;
James Murray, Durham, NC;
Harigovind V. Ramasamy, Ossining, NY;

Assignment For Published Patent Application

INTERNATIONAL BUSINESS MACHINES CORPORATION, Armonk, NY

Power of Attorney: The patent practitioners associated with Customer Number 48062

Domestic Priority data as claimed by applicant

This application is a CON of 13/600,891 08/31/2012

Foreign Applications (You may be eligible to benefit from the **Patent Prosecution Highway** program at the USPTO. Please see http://www.uspto.gov for more information.)

Permission to Access - A proper **Authorization to Permit Access to Application by Participating Offices** (PTO/SB/39 or its equivalent) has been received by the USPTO.

If Required, Foreign Filing License Granted: 09/28/2012

The country code and number of your priority application, to be used for filing abroad under the Paris Convention, is **US 13/618,298**

Projected Publication Date: 03/06/2014

Non-Publication Request: No

Early Publication Request: No
Title

Automatically Recommending Firewall Rules During Enterprise Information Technology Transformation

Preliminary Class

800

PROTECTING YOUR INVENTION OUTSIDE THE UNITED STATES

Since the rights granted by a U.S. patent extend only throughout the territory of the United States and have no effect in a foreign country, an inventor who wishes patent protection in another country must apply for a patent in a specific country or in regional patent offices. Applicants may wish to consider the filing of an international application under the Patent Cooperation Treaty (PCT). An international (PCT) application generally has the same effect as a regular national patent application in each PCT-member country. The PCT process **simplifies** the filing of patent applications on the same invention in member countries, but **does not result** in a grant of "an international patent" and does not eliminate the need of applicants to file additional documents and fees in countries where patent protection is desired.

Almost every country has its own patent law, and a person desiring a patent in a particular country must make an application for patent in that country in accordance with its particular laws. Since the laws of many countries differ in various respects from the patent law of the United States, applicants are advised to seek guidance from specific foreign countries to ensure that patent rights are not lost prematurely.

Applicants also are advised that in the case of inventions made in the United States, the Director of the USPTO must issue a license before applicants can apply for a patent in a foreign country. The filing of a U.S. patent application serves as a request for a foreign filing license. The application's filing receipt contains further information and guidance as to the status of applicant's license for foreign filing.

Applicants may wish to consult the USPTO booklet, "General Information Concerning Patents" (specifically, the section entitled "Treaties and Foreign Patents") for more information on timeframes and deadlines for filing foreign patent applications. The guide is available either by contacting the USPTO Contact Center at 800-786-9199, or it can be viewed on the USPTO website at http://www.uspto.gov/web/offices/pac/doc/general/index.html.

For information on preventing theft of your intellectual property (patents, trademarks and copyrights), you may wish to consult the U.S. Government website, http://www.stopfakes.gov. Part of a Department of Commerce initiative, this website includes self-help "toolkits" giving innovators guidance on how to protect intellectual property in specific countries such as China, Korea and Mexico. For questions regarding patent enforcement issues, applicants may call the U.S. Government hotline at 1-866-999-HALT (1-866-999-4158).

LICENSE FOR FOREIGN FILING UNDER

Title 35, United States Code, Section 184

Title 37, Code of Federal Regulations, 5.11 & 5.15

GRANTED

The applicant has been granted a license under 35 U.S.C. 184, if the phrase "IF REQUIRED, FOREIGN FILING LICENSE GRANTED" followed by a date appears on this form. Such licenses are issued in all applications where the conditions for issuance of a license have been met, regardless of whether or not a license may be required as set forth in 37 CFR 5.15. The scope and limitations of this license are set forth in 37 CFR 5.15(a) unless an earlier license has been issued under 37 CFR 5.15(b). The license is subject to revocation upon written notification. The date indicated is the effective date of the license, unless an earlier license of similar scope has been granted under 37 CFR 5.13 or 5.14.

This license is to be retained by the licensee and may be used at any time on or after the effective date thereof unless it is revoked. This license is automatically transferred to any related applications(s) filed under 37 CFR 1.53(d). This license is not retroactive.

The grant of a license does not in any way lessen the responsibility of a licensee for the security of the subject matter as imposed by any Government contract or the provisions of existing laws relating to espionage and the national security or the export of technical data. Licensees should apprise themselves of current regulations especially with respect to certain countries, of other agencies, particularly the Office of Defense Trade Controls, Department of State (with respect to Arms, Munitions and Implements of War (22 CFR 121-128)); the Bureau of Industry and Security, Department of Commerce (15 CFR parts 730-774); the Office of Foreign AssetsControl, Department of Treasury (31 CFR Parts 500+) and the Department of Energy.

NOT GRANTED

No license under 35 U.S.C. 184 has been granted at this time, if the phrase "IF REQUIRED, FOREIGN FILING LICENSE GRANTED" DOES NOT appear on this form. Applicant may still petition for a license under 37 CFR 5.12, if a license is desired before the expiration of 6 months from the filing date of the application. If 6 months has lapsed from the filing date of this application and the licensee has not received any indication of a secrecy order under 35 U.S.C. 181, the licensee may foreign file the application pursuant to 37 CFR 5.15(b).

SelectUSA

The United States represents the largest, most dynamic marketplace in the world and is an unparalleled location for business investment, innovation and commercialization of new technologies. The USA offers tremendous resources and advantages for those who invest and manufacture goods here. Through SelectUSA, our nation works to encourage, facilitate, and accelerate business investment. To learn more about why the USA is the best country in the world to develop technology, manufacture products, and grow your business, visit SelectUSA.gov.

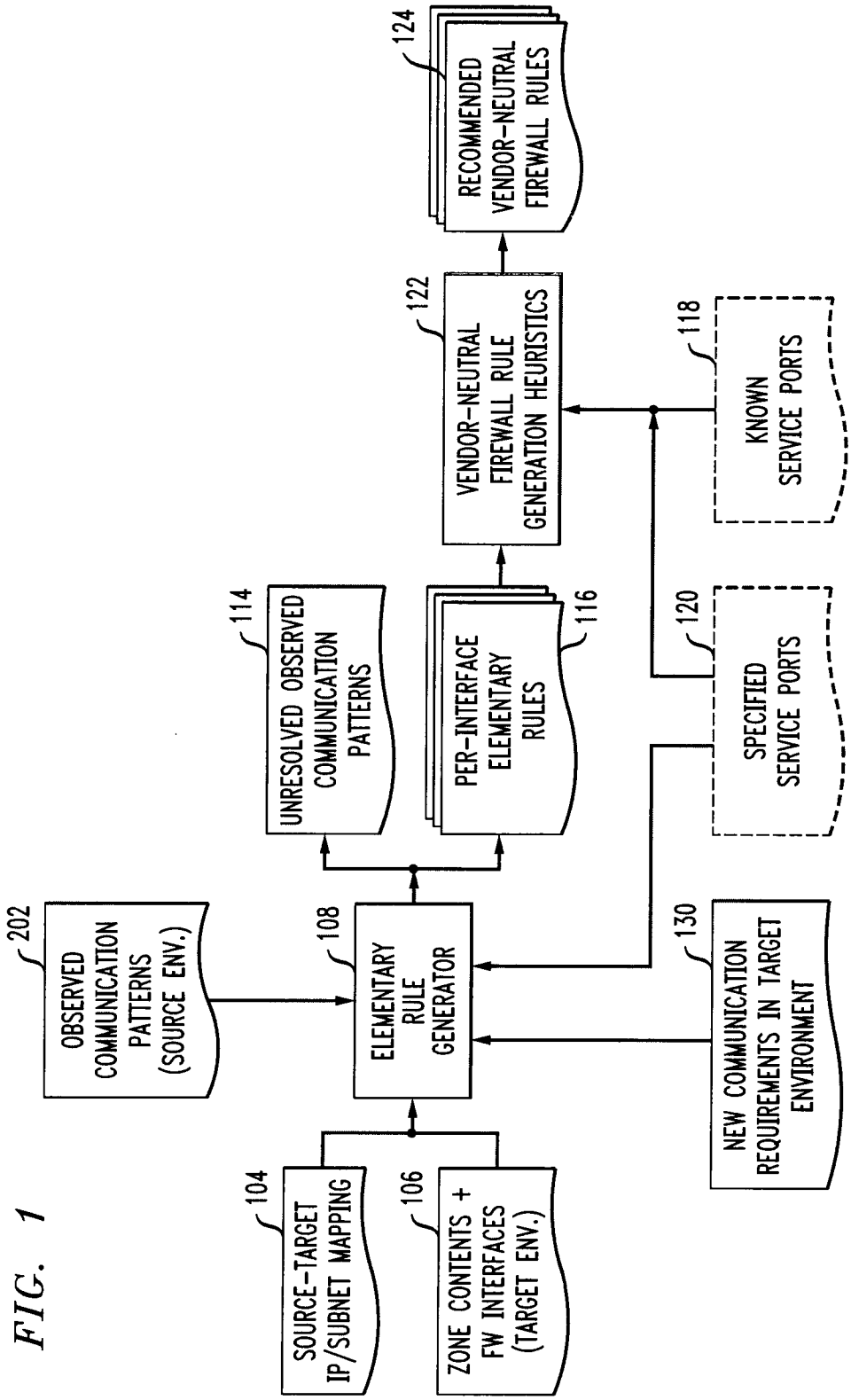
124
RECOMMENDED VENDOR-NEUTRAL FIREWALL RULES
122
VENDOR-NEUTRAL FIREWALL RULE GENERATION HEURISTICS
118
KNOWN SERVICE PORTS
114
UNRESOLVED OBSERVED COMMUNICATION PATTERNS
116
PER-INTERFACE ELEMENTARY RULES
120
SPECIFIED SERVICE PORTS
202
OBSERVED COMMUNICATION PATTERNS (SOURCE ENV.)
108
ELEMENTARY RULE GENERATOR
130
NEW COMMUNICATION REQUIREMENTS IN TARGET ENVIRONMENT
104
SOURCE-TARGET IP/SUBNET MAPPING
106
ZONE CONTENTS + FW INTERFACES (TARGET ENV.)

FIG. 1

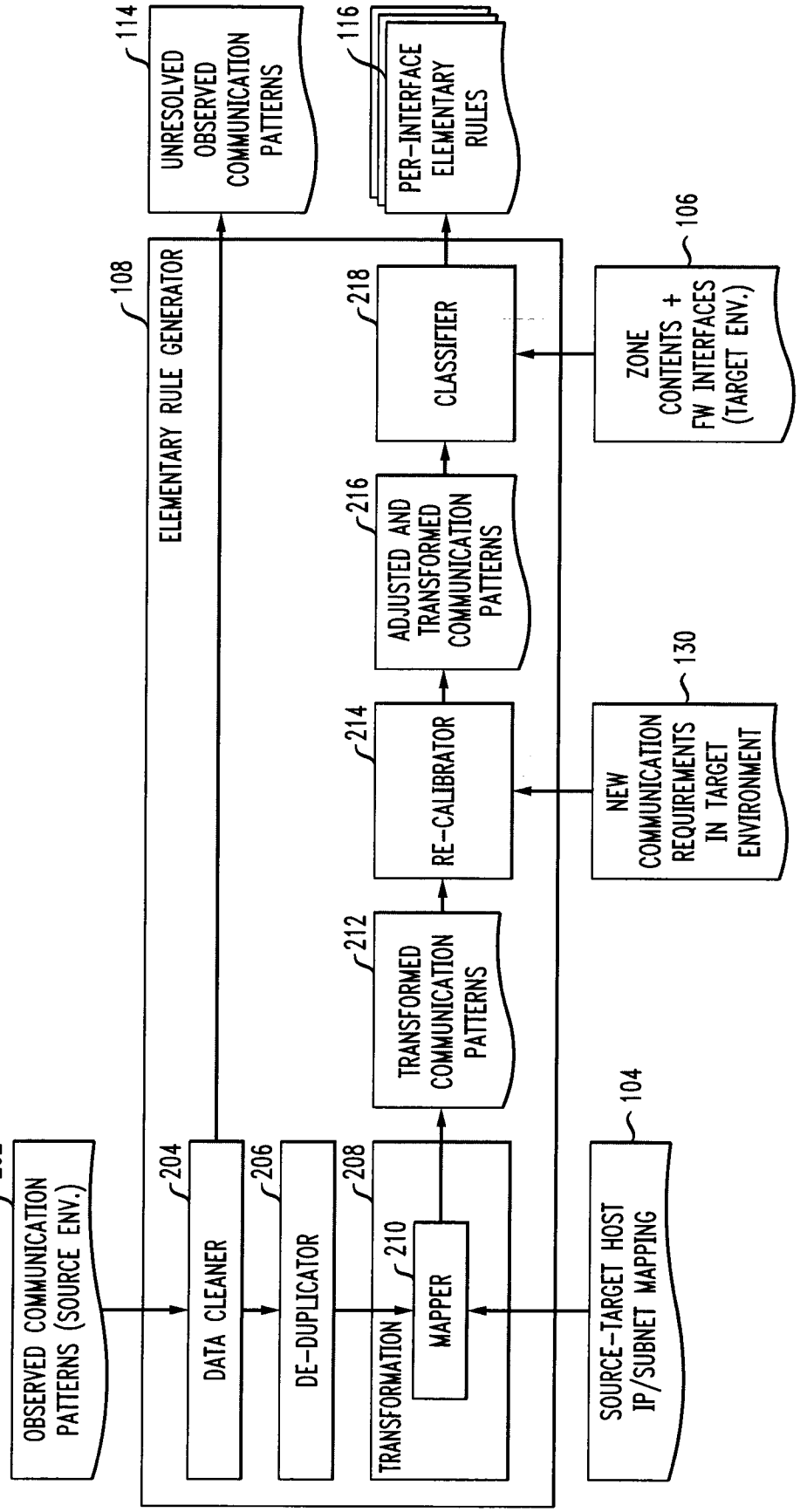
114
UNRESOLVED OBSERVED COMMUNICATION PATTERNS
116
PER-INTERFACE ELEMENTARY RULES
108
ELEMENTARY RULE GENERATOR
218
CLASSIFIER
106
ZONE CONTENTS + FW INTERFACES (TARGET ENV.)
216
ADJUSTED AND TRANSFORMED COMMUNICATION PATTERNS
214
RE-CALIBRATOR
130
NEW COMMUNICATION REQUIREMENTS IN TARGET ENVIRONMENT
212
TRANSFORMED COMMUNICATION PATTERNS
202
OBSERVED COMMUNICATION PATTERNS (SOURCE ENV.)
204
DATA CLEANER
206
DE-DUPLICATOR
208
TRANSFORMATION
210
MAPPER
104
SOURCE-TARGET HOST IP/SUBNET MAPPING

FIG. 2

FIG. 3

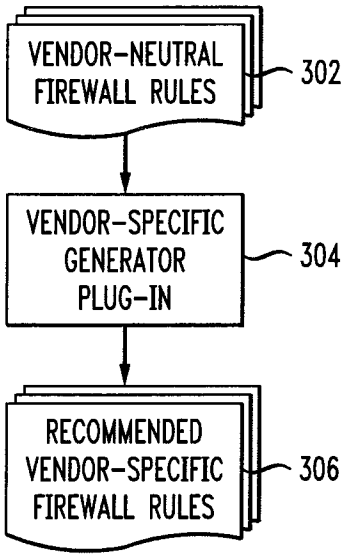
VENDOR-NEUTRAL FIREWALL RULES
302
VENDOR-SPECIFIC GENERATOR PLUG-IN
304
RECOMMENDED VENDOR-SPECIFIC FIREWALL RULES
306

FIG. 4

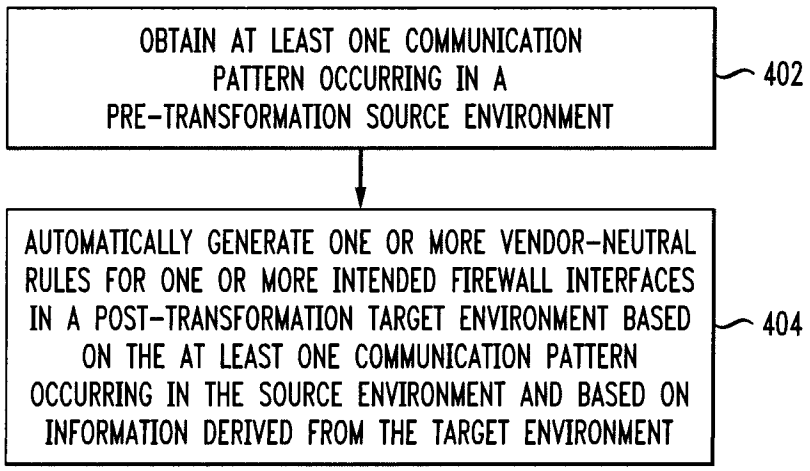
OBTAIN AT LEAST ONE COMMUNICATION PATTERN OCCURRING IN A PRE-TRANSFORMATION SOURCE ENVIRONMENT
402
AUTOMATICALLY GENERATE ONE OR MORE VENDOR-NEUTRAL RULES FOR ONE OR MORE INTENDED FIREWALL INTERFACES IN A POST-TRANSFORMATION TARGET ENVIRONMENT BASED ON THE AT LEAST ONE COMMUNICATION PATTERN OCCURRING IN THE SOURCE ENVIRONMENT AND BASED ON INFORMATION DERIVED FROM THE TARGET ENVIRONMENT
404

FIG. 5

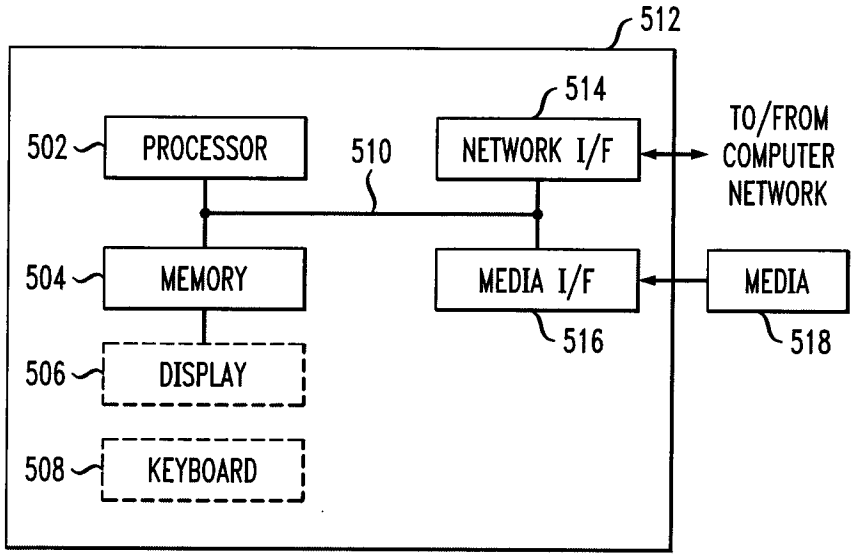
512
514
502
PROCESSOR
510
NETWORK I/F
TO/FROM
COMPUTER
NETWORK
504
MEMORY
MEDIA I/F
MEDIA
516
518
506
DISPLAY
508
KEYBOARD

Electronic Acknowledgement Receipt

EFS ID:	13985756
Application Number:	13618298
International Application Number:	
Confirmation Number:	1015
Title of Invention:	Automatically Recommending Firewall Rules During Enterprise Information Technology Transformation
First Named Inventor/Applicant Name:	Nancy Burchfield
Customer Number:	48062
Filer:	Michael J. Cooper
Filer Authorized By:	
Attorney Docket Number:	YOR920120481US2
Receipt Date:	15-OCT-2012
Filing Date:	14-SEP-2012
Time Stamp:	15:28:24
Application Type:	Utility under 35 USC 111(a)

Payment information:

Submitted with Payment	no

File Listing:

Document Number	Document Description	File Name	File Size(Bytes)/ Message Digest	Multi Part /.zip	Pages (if appl.)
1	Drawings-only black and white line drawings	YOR920120481US2_FormalDrawings_10152012.pdf	142278 7af9ca1a2adde30bd18951dc28ec6bacccde90c2	no	4

Warnings:

Information:

Total Files Size (in bytes):	142278

This Acknowledgement Receipt evidences receipt on the noted date by the USPTO of the indicated documents, characterized by the applicant, and including page counts, where applicable. It serves as evidence of receipt similar to a Post Card, as described in MPEP 503.

New Applications Under 35 U.S.C. 111
If a new application is being filed and the application includes the necessary components for a filing date (see 37 CFR 1.53(b)-(d) and MPEP 506), a Filing Receipt (37 CFR 1.54) will be issued in due course and the date shown on this Acknowledgement Receipt will establish the filing date of the application.

National Stage of an International Application under 35 U.S.C. 371
If a timely submission to enter the national stage of an international application is compliant with the conditions of 35 U.S.C. 371 and other applicable requirements a Form PCT/DO/EO/903 indicating acceptance of the application as a national stage submission under 35 U.S.C. 371 will be issued in addition to the Filing Receipt, in due course.

New International Application Filed with the USPTO as a Receiving Office
If a new international application is being filed and the international application includes the necessary components for an international filing date (see PCT Article 11 and MPEP 1810), a Notification of the International Application Number and of the International Filing Date (Form PCT/RO/105) will be issued in due course, subject to prescriptions concerning national security, and the date shown on this Acknowledgement Receipt will establish the international filing date of the application.

UNITED STATES PATENT AND TRADEMARK OFFICE

UNITED STATES DEPARTMENT OF COMMERCE
United States Patent and Trademark Office
Address: COMMISSIONER FOR PATENTS
P.O. Box 1450
Alexandria, Virginia 22313-1450
www.uspto.gov

APPLICATION NUMBER	FILING OR 371(C) DATE	FIRST NAMED APPLICANT	ATTY. DOCKET NO./TITLE
13/618,298	09/14/2012	Nancy Burchfield	YOR920120481US2

CONFIRMATION NO. 1015

48062
RYAN, MASON & LEWIS, LLP
1175 Post Road East
2nd Floor
Westport, CT 06880

PUBLICATION NOTICE

OC000000066986993

Title: Automatically Recommending Firewall Rules During Enterprise Information Technology Transformation

Publication No.US-2014-0068701-A1
Publication Date:03/06/2014

NOTICE OF PUBLICATION OF APPLICATION

The above-identified application will be electronically published as a patent application publication pursuant to 37 CFR 1.211, et seq. The patent application publication number and publication date are set forth above.

The publication may be accessed through the USPTO's publically available Searchable Databases via the Internet at www.uspto.gov. The direct link to access the publication is currently http://www.uspto.gov/patft/.

The publication process established by the Office does not provide for mailing a copy of the publication to applicant. A copy of the publication may be obtained from the Office upon payment of the appropriate fee set forth in 37 CFR 1.19(a)(1). Orders for copies of patent application publications are handled by the USPTO's Office of Public Records. The Office of Public Records can be reached by telephone at (703) 308-9726 or (800) 972-6382, by facsimile at (703) 305-8759, by mail addressed to the United States Patent and Trademark Office, Office of Public Records, Alexandria, VA 22313-1450 or via the Internet.

In addition, information on the status of the application, including the mailing date of Office actions and the dates of receipt of correspondence filed in the Office, may also be accessed via the Internet through the Patent Electronic Business Center at www.uspto.gov using the public side of the Patent Application Information and Retrieval (PAIR) system. The direct link to access this status information is currently http://pair.uspto.gov/. Prior to publication, such status information is confidential and may only be obtained by applicant using the private side of PAIR.

Further assistance in electronically accessing the publication, or about PAIR, is available by calling the Patent Electronic Business Center at 1-866-217-9197.

Office of Data Managment, Application Assistance Unit (571) 272-4000, or (571) 272-4200, or 1-888-786-0101

PTO/SB/08a (01-10)
Approved for use through 07/31/2012. OMB 0651-0031
U.S. Patent and Trademark Office; U.S. DEPARTMENT OF COMMERCE
Under the Paperwork Reduction Act of 1995, no persons are required to respond to a collection of information unless it contains a valid OMB control number.

INFORMATION DISCLOSURE STATEMENT BY APPLICANT

(Not for submission under 37 CFR 1.99)

Application Number	13618298
Filing Date	2012-09-14
First Named Inventor	Nancy Burchfield et al.
Art Unit	1638
Examiner Name	TBD
Attorney Docket Number	YOR920120481US2

U.S.PATENTS Remove

Examiner Initial*	Cite No	Patent Number	Kind Code[1]	Issue Date	Name of Patentee or Applicant of cited Document	Pages,Columns,Lines where Relevant Passages or Relevant Figures Appear
	1	7392539	B2	2008-06-24	Brooks et al.	
	2	7809817	B2	2010-10-05	Hillier, Andrew D.	
	3	7966659	B1	2011-06-21	Wilkinson et al.	
	4	8060553	B2	2011-11-15	Mamou et al.	
	5	8272031	B2	2012-09-18	Abderrazzaq et al.	
	6	8516241	B2	2013-08-20	Chang et al.	
	7	8671222	B2	2014-03-11	Gass et al.	
	8	8706771	B2	2014-04-22	Gass et al.	

If you wish to add additional U.S. Patent citation information please click the Add button. Add

INFORMATION DISCLOSURE STATEMENT BY APPLICANT (Not for submission under 37 CFR 1.99)	Application Number	13618298
	Filing Date	2012-09-14
	First Named Inventor	Nancy Burchfield et al.
	Art Unit	1638
	Examiner Name	TBD
	Attorney Docket Number	YOR920120481US2

U.S.PATENT APPLICATION PUBLICATIONS						Remove
Examiner Initial*	Cite No	Publication Number	Kind Code[1]	Publication Date	Name of Patentee or Applicant of cited Document	Pages,Columns,Lines where Relevant Passages or Relevant Figures Appear
	1	20020133579	A1	2002-09-19	Bernhardt et al.	
	2	20030037327	A1	2003-02-20	Cicciarelli et al.	
	3	20030236690	A1	2003-12-25	Johnston-Watt et al.	
	4	20040039942	A1	2004-02-26	Cooper et al.	
	5	20040199609	A1	2004-10-07	Papatla et al.	
	6	20050015471	A1	2005-01-20	Zhang et at.	
	7	20050216897	A1	2005-09-29	Amrhein et al.	
	8	20060047720	A1	2006-03-02	Kulkarni et al.	
	9	20070006122	A1	2007-01-04	Bailey et al.	

INFORMATION DISCLOSURE STATEMENT BY APPLICANT (Not for submission under 37 CFR 1.99)	Application Number	13618298
	Filing Date	2012-09-14
	First Named Inventor	Nancy Burchfield et al.
	Art Unit	1638
	Examiner Name	TBD
	Attorney Docket Number	YOR920120481US2

	10	20070250615	A1	2007-10-25	Hillier, Andrew D.	
	11	20070250621	A1	2007-10-25	Hillier, Andrew D.	
	12	20070282982	A1	2007-12-06	Childress et al.	
	13	20100064341	A1	2010-03-11	Aldera, Carlo	
	14	20100095348	A1	2010-04-15	Foster et al.	
	15	20100238945	A1	2010-09-23	McKernan et al.	
	16	20100332401	A1	2010-12-30	Prahlad et al.	
	17	20100333116	A1	2010-12-30	Prahlad et al.	
	18	20100332818	A1	2010-12-30	Prahlad et al.	
	19	20100332479	A1	2010-12-30	Prahlad et al.	
	20	20100332456	A1	2010-12-30	Prahlad et al.	

INFORMATION DISCLOSURE STATEMENT BY APPLICANT (Not for submission under 37 CFR 1.99)	Application Number	13618298
	Filing Date	2012-09-14
	First Named Inventor	Nancy Burchfield et al.
	Art Unit	1638
	Examiner Name	TBD
	Attorney Docket Number	YOR920120481US2

	21	20100332454	A1	2010-12-30	Prahlad et al.	
	22	20110078211	A1	2011-03-31	Gass et al.	
	23	20110072504	A1	2011-03-24	Abderrazzaq et al.	
	24	20110283269	A1	2011-11-17	Gass et al.	
	25	20110282995	A1	2011-11-17	Gass et al.	
	26	20110283270	A1	2011-11-17	Gass et al.	
	27	20110302647	A1	2011-12-08	Bhattacharya et al.	
	28	20110296391	A1	2011-12-01	Gass et al.	
	29	20130019277	A1	2013-01-17	Chang et al.	
	30	20130191531	A1	2013-07-25	Kruglick, Ezekiel	
	31	20130276066	A1	2013-10-17	Buehl, Matthias	

INFORMATION DISCLOSURE STATEMENT BY APPLICANT (Not for submission under 37 CFR 1.99)	Application Number	13618298
	Filing Date	2012-09-14
	First Named Inventor	Nancy Burchfield et al.
	Art Unit	1638
	Examiner Name	TBD
	Attorney Docket Number	YOR920120481US2

	32	20130339882	A1	2013-12-19	Owen et al.	

If you wish to add additional U.S. Published Application citation information please click the Add button. Add

FOREIGN PATENT DOCUMENTS Remove

Examiner Initial*	Cite No	Foreign Document Number[3]	Country Code[2] ¡	Kind Code[4]	Publication Date	Name of Patentee or Applicant of cited Document	Pages,Columns,Lines where Relevant Passages or Relevant Figures Appear	T[5]
	1							☐

If you wish to add additional Foreign Patent Document citation information please click the Add button Add

NON-PATENT LITERATURE DOCUMENTS Remove

Examiner Initials*	Cite No	Include name of the author (in CAPITAL LETTERS), title of the article (when appropriate), title of the item (book, magazine, journal, serial, symposium, catalog, etc), date, pages(s), volume-issue number(s), publisher, city and/or country where published.	T[5]
	1		☐

If you wish to add additional non-patent literature document citation information please click the Add button Add

EXAMINER SIGNATURE

Examiner Signature		Date Considered	

*EXAMINER: Initial if reference considered, whether or not citation is in conformance with MPEP 609. Draw line through a citation if not in conformance and not considered. Include copy of this form with next communication to applicant.

[1] See Kind Codes of USPTO Patent Documents at www.USPTO.GOV or MPEP 901.04. [2] Enter office that issued the document, by the two-letter code (WIPO Standard ST.3). [3] For Japanese patent documents, the indication of the year of the reign of the Emperor must precede the serial number of the patent document. [4] Kind of document by the appropriate symbols as indicated on the document under WIPO Standard ST.16 if possible. [5] Applicant is to place a check mark here if English language translation is attached.

INFORMATION DISCLOSURE STATEMENT BY APPLICANT (Not for submission under 37 CFR 1.99)		
	Application Number	13618298
	Filing Date	2012-09-14
	First Named Inventor	Nancy Burchfield et al.
	Art Unit	1638
	Examiner Name	TBD
	Attorney Docket Number	YOR920120481US2

CERTIFICATION STATEMENT

Please see 37 CFR 1.97 and 1.98 to make the appropriate selection(s):

☐ That each item of information contained in the information disclosure statement was first cited in any communication from a foreign patent office in a counterpart foreign application not more than three months prior to the filing of the information disclosure statement. See 37 CFR 1.97(e)(1).

OR

☒ That no item of information contained in the information disclosure statement was cited in a communication from a foreign patent office in a counterpart foreign application, and, to the knowledge of the person signing the certification after making reasonable inquiry, no item of information contained in the information disclosure statement was known to any individual designated in 37 CFR 1.56(c) more than three months prior to the filing of the information disclosure statement. See 37 CFR 1.97(e)(2).

☐ See attached certification statement.

☐ The fee set forth in 37 CFR 1.17 (p) has been submitted herewith.

☐ A certification statement is not submitted herewith.

SIGNATURE

A signature of the applicant or representative is required in accordance with CFR 1.33, 10.18. Please see CFR 1.4(d) for the form of the signature.

Signature	/Michael J. Cooper/	Date (YYYY-MM-DD)	2014-08-12
Name/Print	Michael J. Cooper	Registration Number	57749

This collection of information is required by 37 CFR 1.97 and 1.98. The information is required to obtain or retain a benefit by the public which is to file (and by the USPTO to process) an application. Confidentiality is governed by 35 U.S.C. 122 and 37 CFR 1.14. This collection is estimated to take 1 hour to complete, including gathering, preparing and submitting the completed application form to the USPTO. Time will vary depending upon the individual case. Any comments on the amount of time you require to complete this form and/or suggestions for reducing this burden, should be sent to the Chief Information Officer, U.S. Patent and Trademark Office, U.S. Department of Commerce, P.O. Box 1450, Alexandria, VA 22313-1450. DO NOT SEND FEES OR COMPLETED FORMS TO THIS ADDRESS. **SEND TO: Commissioner for Patents, P.O. Box 1450, Alexandria, VA 22313-1450.**

Privacy Act Statement

The Privacy Act of 1974 (P.L. 93-579) requires that you be given certain information in connection with your submission of the attached form related to a patent application or patent. Accordingly, pursuant to the requirements of the Act, please be advised that: (1) the general authority for the collection of this information is 35 U.S.C. 2(b)(2); (2) furnishing of the information solicited is voluntary; and (3) the principal purpose for which the information is used by the U.S. Patent and Trademark Office is to process and/or examine your submission related to a patent application or patent. If you do not furnish the requested information, the U.S. Patent and Trademark Office may not be able to process and/or examine your submission, which may result in termination of proceedings or abandonment of the application or expiration of the patent.

The information provided by you in this form will be subject to the following routine uses:

1. The information on this form will be treated confidentially to the extent allowed under the Freedom of Information Act (5 U.S.C. 552) and the Privacy Act (5 U.S.C. 552a). Records from this system of records may be disclosed to the Department of Justice to determine whether the Freedom of Information Act requires disclosure of these record s.

2. A record from this system of records may be disclosed, as a routine use, in the course of presenting evidence to a court, magistrate, or administrative tribunal, including disclosures to opposing counsel in the course of settlement negotiations.

3. A record in this system of records may be disclosed, as a routine use, to a Member of Congress submitting a request involving an individual, to whom the record pertains, when the individual has requested assistance from the Member with respect to the subject matter of the record.

4. A record in this system of records may be disclosed, as a routine use, to a contractor of the Agency having need for the information in order to perform a contract. Recipients of information shall be required to comply with the requirements of the Privacy Act of 1974, as amended, pursuant to 5 U.S.C. 552a(m).

5. A record related to an International Application filed under the Patent Cooperation Treaty in this system of records may be disclosed, as a routine use, to the International Bureau of the World Intellectual Property Organization, pursuant to the Patent Cooperation Treaty.

6. A record in this system of records may be disclosed, as a routine use, to another federal agency for purposes of National Security review (35 U.S.C. 181) and for review pursuant to the Atomic Energy Act (42 U.S.C. 218(c)).

7. A record from this system of records may be disclosed, as a routine use, to the Administrator, General Services, or his/her designee, during an inspection of records conducted by GSA as part of that agency's responsibility to recommend improvements in records management practices and programs, under authority of 44 U.S.C. 2904 and 2906. Such disclosure shall be made in accordance with the GSA regulations governing inspection of records for this purpose, and any other relevant (i.e., GSA or Commerce) directive. Such disclosure shall not be used to make determinations about individuals.

8. A record from this system of records may be disclosed, as a routine use, to the public after either publication of the application pursuant to 35 U.S.C. 122(b) or issuance of a patent pursuant to 35 U.S.C. 151. Further, a record may be disclosed, subject to the limitations of 37 CFR 1.14, as a routine use, to the public if the record was filed in an application which became abandoned or in which the proceedings were terminated and which application is referenced by either a published application, an application open to public inspections or an issued patent.

9. A record from this system of records may be disclosed, as a routine use, to a Federal, State, or local law enforcement agency, if the USPTO becomes aware of a violation or potential violation of law or regulation.

Electronic Acknowledgement Receipt

EFS ID:	19846350
Application Number:	13618298
International Application Number:	
Confirmation Number:	1015
Title of Invention:	Automatically Recommending Firewall Rules During Enterprise Information Technology Transformation
First Named Inventor/Applicant Name:	Nancy Burchfield
Customer Number:	48062
Filer:	Michael J. Cooper
Filer Authorized By:	
Attorney Docket Number:	YOR920120481US2
Receipt Date:	12-AUG-2014
Filing Date:	14-SEP-2012
Time Stamp:	17:02:25
Application Type:	Utility under 35 USC 111(a)

Payment information:

Submitted with Payment	no

File Listing:

Document Number	Document Description	File Name	File Size(Bytes)/ Message Digest	Multi Part /.zip	Pages (if appl.)
1	Information Disclosure Statement (IDS) Form (SB08)	YOR920120481US2_SupplementalIDS_08122014.pdf	613447 f69db46b2a3f549fa3496bc0d89ca3ae8a478866d	no	7

Warnings:

Information:

Total Files Size (in bytes):	613447

This Acknowledgement Receipt evidences receipt on the noted date by the USPTO of the indicated documents, characterized by the applicant, and including page counts, where applicable. It serves as evidence of receipt similar to a Post Card, as described in MPEP 503.

New Applications Under 35 U.S.C. 111
If a new application is being filed and the application includes the necessary components for a filing date (see 37 CFR 1.53(b)-(d) and MPEP 506), a Filing Receipt (37 CFR 1.54) will be issued in due course and the date shown on this Acknowledgement Receipt will establish the filing date of the application.

National Stage of an International Application under 35 U.S.C. 371
If a timely submission to enter the national stage of an international application is compliant with the conditions of 35 U.S.C. 371 and other applicable requirements a Form PCT/DO/EO/903 indicating acceptance of the application as a national stage submission under 35 U.S.C. 371 will be issued in addition to the Filing Receipt, in due course.

New International Application Filed with the USPTO as a Receiving Office
If a new international application is being filed and the international application includes the necessary components for an international filing date (see PCT Article 11 and MPEP 1810), a Notification of the International Application Number and of the International Filing Date (Form PCT/RO/105) will be issued in due course, subject to prescriptions concerning national security, and the date shown on this Acknowledgement Receipt will establish the international filing date of the application.

UNITED STATES PATENT AND TRADEMARK OFFICE

UNITED STATES DEPARTMENT OF COMMERCE
United States Patent and Trademark Office
Address: COMMISSIONER FOR PATENTS
P.O. Box 1450
Alexandria, Virginia 22313-1450
www.uspto.gov

APPLICATION NO.	FILING DATE	FIRST NAMED INVENTOR	ATTORNEY DOCKET NO.	CONFIRMATION NO.
13/618,298	09/14/2012	Nancy Burchfield	YOR920120481US2	1015

48062 7590 10/23/2014
RYAN, MASON & LEWIS, LLP
1175 Post Road East
2nd Floor
Westport, CT 06880

EXAMINER
MEJIA, FELICIANO S

ART UNIT	PAPER NUMBER
2492	

MAIL DATE	DELIVERY MODE
10/23/2014	PAPER

Please find below and/or attached an Office communication concerning this application or proceeding.

The time period for reply, if any, is set in the attached communication.

Office Action Summary	Application No. 13/618,298	Applicant(s) BURCHFIELD ET AL.	
	Examiner FELICIANO MEJIA	Art Unit 2492	AIA (First Inventor to File) Status No

-- The MAILING DATE of this communication appears on the cover sheet with the correspondence address --

Period for Reply

A SHORTENED STATUTORY PERIOD FOR REPLY IS SET TO EXPIRE 3 MONTHS FROM THE MAILING DATE OF THIS COMMUNICATION.

- Extensions of time may be available under the provisions of 37 CFR 1.136(a). In no event, however, may a reply be timely filed after SIX (6) MONTHS from the mailing date of this communication.
- If NO period for reply is specified above, the maximum statutory period will apply and will expire SIX (6) MONTHS from the mailing date of this communication.
- Failure to reply within the set or extended period for reply will, by statute, cause the application to become ABANDONED (35 U.S.C. § 133). Any reply received by the Office later than three months after the mailing date of this communication, even if timely filed, may reduce any earned patent term adjustment. See 37 CFR 1.704(b).

Status

1)☒ Responsive to communication(s) filed on *09/14/2012*.

☐ A declaration(s)/affidavit(s) under **37 CFR 1.130(b)** was/were filed on _____.

2a)☐ This action is **FINAL**. 2b)☒ This action is non-final.

3)☐ An election was made by the applicant in response to a restriction requirement set forth during the interview on _____; the restriction requirement and election have been incorporated into this action.

4)☐ Since this application is in condition for allowance except for formal matters, prosecution as to the merits is closed in accordance with the practice under *Ex parte Quayle*, 1935 C.D. 11, 453 O.G. 213.

Disposition of Claims*

5)☒ Claim(s) *1-20* is/are pending in the application.

5a) Of the above claim(s) _____ is/are withdrawn from consideration.

6)☐ Claim(s) _____ is/are allowed.

7)☒ Claim(s) *1-20* is/are rejected.

8)☐ Claim(s) _____ is/are objected to.

9)☐ Claim(s) _____ are subject to restriction and/or election requirement.

* If any claims have been determined allowable, you may be eligible to benefit from the **Patent Prosecution Highway** program at a participating intellectual property office for the corresponding application. For more information, please see http://www.uspto.gov/patents/init_events/pph/index.jsp or send an inquiry to PPHfeedback@uspto.gov.

Application Papers

10)☐ The specification is objected to by the Examiner.

11)☒ The drawing(s) filed on *09/14/2012* is/are: a)☐ accepted or b)☐ objected to by the Examiner.

Applicant may not request that any objection to the drawing(s) be held in abeyance. See 37 CFR 1.85(a).

Replacement drawing sheet(s) including the correction is required if the drawing(s) is objected to. See 37 CFR 1.121(d).

Priority under 35 U.S.C. § 119

12)☐ Acknowledgment is made of a claim for foreign priority under 35 U.S.C. § 119(a)-(d) or (f).

Certified copies:

a)☐ All b)☐ Some** c)☐ None of the:

1.☐ Certified copies of the priority documents have been received.

2.☐ Certified copies of the priority documents have been received in Application No. _____.

3.☐ Copies of the certified copies of the priority documents have been received in this National Stage application from the International Bureau (PCT Rule 17.2(a)).

** See the attached detailed Office action for a list of the certified copies not received.

Attachment(s)

1) ☒ Notice of References Cited (PTO-892)

2) ☒ Information Disclosure Statement(s) (PTO/SB/08a and/or PTO/SB/08b) Paper No(s)/Mail Date *09/14/2012 and 08/12/2014*.

3) ☐ Interview Summary (PTO-413) Paper No(s)/Mail Date. _____ .

4) ☐ Other: _____.

DETAILED ACTION

1. The present application is being examined under the pre-AIA first to invent provisions.

This action is responsive to the application filed 09/14/2012 and directed towards computer readable storage with computer processing instructions and system to provide for:

"Automatically Recommending Firewall Rules During Enterprise Information Technology Transformation."

Claims 1 – 20 have been presented

Claims 1 – 20 are pending.

Oath

2. The Oath filed on 09/14/2012 complies with all the requirements set forth in MPEP 602 and is therefore accepted.

Double Patenting

3. The nonstatutory double patenting rejection is based on a judicially created doctrine grounded in public policy (a policy reflected in the statute) so as to prevent the unjustified or improper timewise extension of the "right to exclude" granted by a patent and to prevent possible harassment by multiple assignees. A nonstatutory double patenting rejection is appropriate where the claims at issue are not identical, but at least one examined application claim is not patentably distinct from the reference claim(s)

because the examined application claim is either anticipated by, or would have been obvious over, the reference claim(s). See, e.g., *In re Berg*, 140 F.3d 1428, 46 USPQ2d 1226 (Fed. Cir. 1998); *In re Goodman*, 11 F.3d 1046, 29 USPQ2d 2010 (Fed. Cir. 1993); *In re Longi*, 759 F.2d 887, 225 USPQ 645 (Fed. Cir. 1985); *In re Van Ornum*, 686 F.2d 937, 214 USPQ 761 (CCPA 1982); *In re Vogel*, 422 F.2d 438, 164 USPQ 619 (CCPA 1970); and *In re Thorington*, 418 F.2d 528, 163 USPQ 644 (CCPA 1969).

A timely filed terminal disclaimer in compliance with 37 CFR 1.321(c) or 1.321(d) may be used to overcome an actual or provisional rejection based on a nonstatutory double patenting ground provided the reference application or patent either is shown to be commonly owned with this application, or claims an invention made as a result of activities undertaken within the scope of a joint research agreement. A terminal disclaimer must be signed in compliance with 37 CFR 1.321(b).

The USPTO internet Web site contains terminal disclaimer forms which may be used. Please visit http://www.uspto.gov/forms/. The filing date of the application will determine what form should be used. A web-based eTerminal Disclaimer may be filled out completely online using web-screens. An eTerminal Disclaimer that meets all requirements is auto-processed and approved immediately upon submission. For more information about eTerminal Disclaimers, refer to http://www.uspto.gov/patents/process/file/efs/guidance/eTD-info-I.jsp.

Claims 1 – 20 are provisionally rejected on the ground of nonstatutory double patenting over claims 1 - 20 of copending Application No. 13/600,891. This is a

provisional double patenting rejection because the patentably indistinct claims have not in fact been patented.

The subject matter claimed in the instant application is fully disclosed in the referenced copending application and would be covered by any patent granted on that copending application since the referenced copending application and the instant application are claiming common subject matter, as follows:

	13/618298	**13/600891 as amended 08/12/2014**
1	An article of manufacture comprising a computer readable storage medium having computer readable instructions tangibly embodied thereon which, when implemented, cause a computer to carry out a plurality of method steps comprising: obtaining at least one communication pattern occurring in a pre-transformation source environment; and automatically generating one or more vendor-neutral rules for one or more intended firewall interfaces in a post-transformation target environment based on the at least one communication pattern occurring in the source environment and based on information derived from the target environment	(Currently Amended) A method for automatically generating one or more rules during IT transformation for configuring one or more firewall interfaces in a post-transformation target environment, the method comprising: obtaining at least one communication pattern occurring in a pre-transformation source environment automatically generating one or more vendor-neutral rules for ~~one or more~~ multiple intended firewall interfaces, <u>on a per-interface basis,</u> in a post-transformation target environment based on the at least one communication pattern occurring in the source environment and based on information derived from the target environment, <u>wherein the one or more vendor-neutral rules contain multiple attributes and values associated therewith for configuring flow-control rules on a firewall device that is not specific to any particular</u> vendor; and <u>automatically converting the one or more vendor-neutral rules into one or more vendor- specific firewall rules for the target environment based on information derived from the target environment, wherein the one or more vendor-specific rules comprise commands to be directly used to configure a particular firewall device associated with a particular vendor;</u> wherein at least one of the steps is carried out by a computer device.
2	The article of manufacture of claim 1, the method steps comprising automatically converting the one or more vendor-neutral rules into one or more vendor-specific firewall rules for the target environment based on information derived from the target environment.	
3	The article of manufacture of claim 1, wherein obtaining at least one communication pattern comprises at least one of: performing an analysis of one or more firewall configuration files associated with	The method of claim 1, wherein obtaining at least one communication pattern comprises at least one of: performing an analysis of one or more firewall configuration files associated with the source

	the source environment; observing one or more run-time network flows at the source environment; analyzing one or more configured dependencies at one or more servers running on the source environment; analyzing one or more firewall log files; and using manually provided information about one or more flows at the source environment.	environment; observing one or more run-time network flows at the source environment; analyzing one or more configured dependencies at one or more servers running on the source environment;
4	The article of manufacture of claim 1, wherein information derived from the target environment used for automatically generating one or more vendor-neutral firewall rules comprises at least one of: firewall topology; security zone topology; security zone contents; and a new internet protocol (IP) address and subnet information.	The method of claim 1, wherein information derived from the target environment used for automatically generating one or more vendor-neutral firewall rules comprises at least one of: firewall topology; security zone topology; security zone contents; and a new internet protocol (IP) address and subnet information.
5	The article of manufacture of claim 1, wherein obtaining at least one communication pattern comprises obtaining information pertaining to service ports.	The method of claim 1, wherein obtaining at least one communication pattern comprises obtaining information pertaining to service ports.
6	The article of manufacture of claim 1, wherein automatically generating one or more vendor-neutral rules comprises: determining whether a communication pattern and/or one or more additional requirements from the target environment are relevant for the one or more firewall interfaces in the target environment; and automatically generating one or more vendor-neutral per-interface rules for one or more intended interfaces in the target environment based on the at least one communication pattern occurring in the source environment and/or one or more additional requirements from the target environment that are determined relevant for each interface	The method of claim l, wherein automatically generating one or more vendor-neutral rules comprises: determining whether a communication pattern and/or one or more additional requirements from the target environment are relevant for the ~~one or more~~ multiple firewall interfaces in the target environment; and automatically generating one or more vendor-neutral per-interface rules for one or more intended interfaces in the target environment based on the at least one communication pattern occurring in the source environment and/or one or more additional requirements from the target environment that are determined relevant for each interface.
7	The article of manufacture of claim 6, wherein automatically generating one or more vendor-neutral per-interface rules for one or more intended interfaces in the target environment comprises generating at least one transformed communication pattern by applying a source environment-target environment IP address or subnet mapping to the at least one communication pattern occurring in the source environment	The method of claim 6, wherein automatically generating one or more vendor-neutral per-interface rules for ~~one or more~~ multiple intended interfaces in the target environment comprises generating at least one transformed communication pattern by applying a source environment-target environment IP address or subnet mapping to the at least one communication pattern occurring in the source environment.

8	The article of manufacture of claim 6, wherein automatically generating one or more vendor-neutral per-interface rules for one or more intended interfaces in the target environment comprises incorporating new communication and/or new security requirements from the target environment.	The method of claim 6, wherein automatically generating one or more vendor-neutral per-interface rules for ~~one or more~~ multiple intended interfaces in the target environment comprises incorporating new communication and/or new security requirements from the target environment.
9	The article of manufacture of claim 6, wherein automatically generating one or more vendor-neutral per-interface rules for one or more intended interfaces in the target environment comprises incorporating information pertaining to zone contents and firewall interfaces of the target environment.	The method of claim 6, wherein automatically generating one or more vendor-neutral per-interface rules for ~~oneor more~~ multiple intended interfaces in the target environment comprises incorporating information pertaining to zone contents and firewall interfaces of the target environment.
10	The article of manufacture of claim 6, wherein automatically generating one or more vendor-neutral per-interface rules for one or more intended interfaces in the target environment comprises applying heuristics and/or user-provided information to identify one or more service ports.	The method of claim 6, wherein automatically generating one or more vendor-neutral per-interface rules for ~~one or more~~ multiple intended interfaces in the target environment comprises applying heuristics and/or user-provided information to identify one or more service ports.
11	The article of manufacture of claim 1, wherein only a subset of devices in the source environment are transformed.	The method of claim l, wherein only a subset of devices in the source environment are transformed.
12	The article of manufacture of claim 1, wherein firewall and/or security zone topology in the target environment is partially or fully different from that of the source environment.	The method of claim 1, wherein firewall and/or security zone topology in the target environment is partially or fully different from that of the source environment.
13	The article of manufacture of claim 1, wherein one or more devices in the target environment are from a different vendor and/or model and/or platform from one or more devices in the source environment.	The method of claim 1, wherein one or more devices in the target environment are from a different vendor and/or model and/or platform from one or more devices in the source environment.
14	The article of manufacture of claim 1, wherein one or more firewall devices are physical or virtual devices.	The method of claim 1, wherein one or more firewall devices are physical or virtual devices.
15	The article of manufacture of claim 1, wherein one or more security requirements in the source environment differ from those in the target environment.	The method of claim 1, wherein one or more security requirements in the source environment differ from those in the target environment.
16	The article of manufacture of claim 1, wherein one or more connectivity requirements in the source environment differ from those in the target environment.	The method of claim 1, wherein one or more connectivity requirements in the source environment differ from those in the target environment.
17	The article of manufacture of claim 1, wherein information derived from the target environment comprises already-implemented vendor-specific firewall rules in the target environment	The method of claim 1, wherein information derived from the target environment comprises already-implemented vendor-specific firewall rules in the target environment.
18	The article of manufacture of claim 1, wherein automatically generating one or more vendor-neutral rules for one or more intended firewall interfaces in a target	The method of claim 1, wherein automatically generating one or more vendor-neutral rules for ~~one or more~~ multiple intended firewall interfaces in a target environment comprises accounting for one

	environment comprises accounting for one or more rules already implemented for the target environment's firewalls and recommending additions, deletions, and/or updates to the one or more rules.	or more rules already implemented for the target environment's firewalls and recommending additions, deletions, and/or updates to the one or more rules.
19	The article of manufacture of claim 1, the method steps comprising automatically generating one or more vendor-specific firewall rules for a target environment during an enterprise information technology transformation activity, wherein an enterprise information technology transformation activity comprises at least one of migration, consolidation, virtualization, data center relocation, and cloudification of at least one application or server or service from a source information technology infrastructure to a target information technology infrastructure.	The method of claim 1, comprising automatically generating one or more vendor-specific firewall rules for a target environment during an enterprise information technology transformation activity.
		20. (Original) The method of claim 19, wherein an enterprise information technology transformation activity comprises at least one of migration, consolidation, virtualization, data center relocation, and cloudification of at least one application or server or service from a source information technology infrastructure to a target information technology infrastructure.
20	A system for automatically generating one or more rules during IT transformation for configuring one or more firewall interfaces in a post-transformation target environment, comprising: at least one distinct software module, each distinct software module being embodied on a tangible computer-readable medium; a memory; and at least one processor coupled to the memory and operative for: obtaining at least one communication pattern occurring in a pre-transformation source environment; and automatically generating one or more vendor-neutral rules for one or more intended firewall interfaces in a post-transformation target environment based on the at least one communication pattern occurring in the source environment and based on information derived from the target environment.	

Furthermore, there is no apparent reason why applicant would be prevented from presenting claims corresponding to those of the instant application in the other copending application. See *In re Schneller*, 397 F.2d 350, 158 USPQ 210 (CCPA 1968). See also MPEP § 804.

Claim Rejections - 35 USC § 102

4. The following is a quotation of the appropriate paragraphs of pre-AIA 35 U.S.C. 102 that form the basis for the rejections under this section made in this Office action:

> A person shall be entitled to a patent unless –
>
> (b) the invention was patented or described in a printed publication in this or a foreign country or in public use or on sale in this country, more than one year prior to the date of application for patent in the United States.

5. **Claims 1-13, and 15-20 are rejected under pre-AIA 35 U.S.C. 102(b) as being anticipated by Bartal et al. (US Pub. 2006/0288409 filed 08/10/2006 hereinafter referred to as Bartal).**

Regarding claim 1, Bartal teaches:

"An article of manufacture comprising a computer readable storage medium having computer readable instructions tangibly embodied thereon which, when implemented, cause a computer to carry out a plurality of method steps (abstract) *comprising:*

obtaining at least one communication pattern occurring in a pre-transformation source environment;" (par. 28-31, 35-40, 96-100; automatically generate firewall configuration files from security policy data

based on functionality of devices/servers determine roles/capabilities for multiple gateways).

and

"automatically generating one or more vendor-neutral rules for one or more intended firewall interfaces in a post-transformation target environment based on the at least one communication pattern occurring in the source environment and based on information derived from the target environment." (par.63-67; using Model Definition Language "MDL" data parser to generate entity relation model for policies that can be translated into firewall configuration files for generic network conditions and further providing for a topology adapter for more precise packet filtering at each of the gateway interfaces).

Regarding claim 2, Bartal taught the invention of claim 1 and further teaches:

"automatically converting the one or more vendor-neutral rules into one or more vendor-specific firewall rules for the target environment based on information derived from the target environment." (abstract, par.64-67; entity relationship model translated into configuration files for each interface)

Regarding claim 3, Bartal taught the invention of claim 1 and further teaches:

"wherein obtaining at least one communication pattern comprises at least one of:

performing an analysis of one or more firewall configuration files associated with the source environment;" (par. 96; a visualization and debugging tool 260 transforms the firewall configuration files 250 into a graphical representation that provides a visual representation of both the host-groups structure and the services (packets) that the firewall passes)

"observing one or more run-time network flows at the source environment;" (par. 96; visualization and debugging tool 260 creates a visualization of the policy as it is seen from the point of view of a single gateway interface).

"analyzing one or more configured dependencies at one or more servers running on the source environment;" (par. 98; visualization and debugging tool 260 visualizes the structure of the host-groups with respect to containment and intersection. A rule that applies to some host-group, A, is inherited by any host whose IP address falls with A)

"analyzing one or more firewall log files; (par. 97) *and*

"using manually provided information about one or more flows at the source environment."(pars. 96-100).

Regarding claim 4, Bartal taught the invention of claim 1 and further teaches:

"wherein information derived from the target environment used for automatically generating one or more vendor-neutral firewall rules comprises at least one of:

firewall topology;

security zone topology;

security zone contents; and

a new internet protocol (IP) address and subnet information." (pars. 47-58; taking data from the MDL, to instantiate a security policy which can be mapped to a desired topology based on a grouping of services defined by roles).

Regarding claim 5, Bartal taught the invention of claim 1 and further teaches:

"wherein obtaining at least one communication pattern comprises obtaining information pertaining to service ports." (Fig. 3, par.43; service 320 is executed from the role 310 to the peer for an outgoing capability 315, or from the peer to the role 310 for an incoming capability 315. The **service entity 320 has a protocol-base and two port number attributes, dest-port-no-range and src-port-no-range**).

Regarding claim 6, Bartal taught the invention of claim 1 and further teaches:

"wherein automatically generating one or more vendor-neutral rules comprises:

"determining whether a communication pattern and/or one or more additional requirements from the target environment are relevant for the one or more firewall interfaces in the target environment;" and

"automatically generating one or more vendor-neutral per-interface rules for one or more intended interfaces in the target environment based on the at least one communication pattern occurring in the source environment and/or one or more additional requirements from the target environment that are determined relevant for each interface." (pars. 59-62; MDL for, "Topology Description and Policy Mapping" shows various reconfigurations of the roles for various host devices internal or external to the associated zone).

Regarding claim 7, Bartal taught the invention of claim 6 and further teaches:

"*wherein automatically generating one or more vendor-neutral per-interface rules for one or more intended interfaces in the target environment comprises generating at least one transformed communication pattern by applying a source environment-target environment IP address or subnet mapping to the at least one communication pattern occurring in the source environment.*"(pars. 59-62; defining the zones payroll_zone and corp_zone as

host-groups, specifies their IP-ranges and then defines parts of the network topology by specifying the payroll_zone to be connected to the payroll_gw by means of the payroll_gw_interface1, and the second interface of the payroll_gw to be connected to the corp_zone).

Regarding claim 8, Bartal taught the invention of claim 6 and further teaches: *"wherein automatically generating one or more vendor-neutral per-interface rules for one or more intended interfaces in the target environment comprises incorporating new communication and/or new security requirements from the target environment."* (pars. 52-58; defining service roles and mapping the service roles to service groups, role groups, gateway, etc. for the intended network topology).

Regarding claim 9, Bartal taught the invention of claim 6 and further teaches: *"wherein automatically generating one or more vendor-neutral per-interface rules for one or more intended interfaces in the target environment comprises incorporating information pertaining to zone contents and firewall interfaces of the target environment."*(par. 59-62; defining the zones payroll_zone and corp_zone as host-groups, specifies their IP-ranges and then defines parts of the network topology by specifying the payroll_zone to be connected to the payroll_gw by means of the payroll_gw_interface1, and the second interface of the payroll_gw to be connected to the corp_zone).

Regarding claim 10, Bartal taught the invention of claim 6 and further teaches: *"wherein automatically generating one or more vendor-neutral per-interface rules for one or more intended interfaces in the target environment comprises applying heuristics and/or user-provided information to identify one or more service ports."* (pars. 11 and 47-55; taking data from the MDL, to instantiate a security policy, an administrator can maintain a consistent policy in the presence of Intranet topology changes, allowing the administrator to reuse the same policy at multiple corporate sites with different network details).

Regarding claim 11, Bartal taught the invention of claim 1 and further teaches: *wherein only a subset of devices in the source environment are transformed."* (pars. 38-40; adapting a set of computers within an IP address range or a particular grouping of computers to fit a desired network topology).

Regarding claim 12, Bartal taught the invention of claim 1 and further teaches: *"wherein firewall and/or security zone topology in the target environment is partially or fully different from that of the source environment."* (pars. 27-30; customization of security policy details for use in different network topologies).

Regarding claim 13, Bartal taught the invention of claim 1 and further teaches: *"wherein one or more devices in the target environment are from a different vendor and/or model and/or platform from one or more devices in the source environment ."* (pars. 28-30).

Regarding claim 15, Bartal taught the invention of claim 1 and further teaches: *"wherein one or more security requirements in the source environment differ from those in the target environment.*" (par.38-40; operating a computer device in a closed role-group environment for which inheritance of parent roles do not apply).

Regarding claim 16, Bartal taught the invention of claim 1 and further teaches: *"wherein one or more connectivity requirements in the source environment differ from those in the target environment.*" (pars. 26-30 and 38-40; setting up separate security zones within a network topology and controlling which network interface connections are allowed to communicate between zones).

Regarding claim 17, Bartal taught the invention of claim 1 and further teaches: *"wherein information derived from the target environment comprises already-implemented vendor-specific firewall rules in the target environment.* " (pars. 89-95; using a topology adapter to determine gateway explicit rules derived from the target environment).

Regarding claim 18, Bartal taught the invention of claim 1 and further teaches:

"wherein automatically generating one or more vendor-neutral rules for multiple intended firewall interfaces in a target environment comprises accounting for one or more rules already implemented for the target environment's firewalls and recommending additions, deletions, and/or updates to the one or more rules." (pars. 89-95 and 104; using a topology adapter to determine gateway explicit rules derived from the target environment would inherently include the ability to update/upgrade attributes and other objects to accommodate evolving firewall technologies).

Regarding claim 19, Bartal taught the invention of claim 1 and further teaches:

"automatically generating one or more vendor-specific firewall rules for a target environment during an enterprise information technology transformation activity." (pars.13 and 27-31; visualization and debugging tool is provided to transform the firewall-specific configuration files into a graphical representation of the current policy on the actual topology, allowing the viability of a chosen policy to be evaluated).

"wherein an enterprise information technology transformation activity comprises at least one of migration, consolidation, virtualization, data center relocation, and cloudification of at least one application or server or service from a source information technology infrastructure to a target information technology infrastructure." (par.29-31; the configuration and maintenance of

consistent security policies that can be used to configure network sites with differing network details would inherently read on the technology transformation activity associated with a change to a new network topology).

Regarding claim 20, Bartal teaches:

"A system, comprising a computer readable storage medium having computer readable instructions tangibly embodied thereon which, when implemented, cause a computer to carry out a plurality of method steps (abstract)

comprising:

obtaining at least one communication pattern occurring in a pre-transformation source environment;" (par. 28-31, 35-40, 96-100; automatically generate firewall configuration files from security policy data based on functionality of devices/servers determine roles/capabilities for multiple gateways).

and

"automatically generating one or more vendor-neutral rules for one or more intended firewall interfaces in a post-transformation target environment based on the at least one communication pattern occurring in the source environment and based on information derived from the target environment." (par.63-67; using Model Definition Language "MDL" data parser to generate entity relation model for policies that can be translated into firewall configuration files for generic network conditions and further

providing for a topology adapter for more precise packet filtering at each of the gateway interfaces).

Claim Rejections - 35 USC § 103

6. The following is a quotation of pre-AIA 35 U.S.C. 103(a) which forms the basis for all obviousness rejections set forth in this Office action:

> (a) A patent may not be obtained though the invention is not identically disclosed or described as set forth in section 102 of this title, if the differences between the subject matter sought to be patented and the prior art are such that the subject matter as a whole would have been obvious at the time the invention was made to a person having ordinary skill in the art to which said subject matter pertains. Patentability shall not be negatived by the manner in which the invention was made.

7. **Claim 14 is rejected under pre-AIA 35 U.S.C. 103(a) as being unpatentable over Bartal, and further in view of Chang et al. (US Pub. 2013/0019277 A1 filed 07/12/2011 hereinafter referred to as Chang).**

Regarding claim 14, Bartal does not expressly disclose, however Chang teaches: *"wherein one or more firewall devices are physical or virtual devices."* (par.58-60).

Therefore, it would have been obvious to one having ordinary skill in the art at the time the invention was made to apply the teachings of Chang to the system of Bartal.

One of ordinary skill in the art would have been motivated to perform such a modification to further protect access to resources (Chang, par.58-60).

Conclusion

Any inquiry concerning this communication or earlier communications from the examiner should be directed to FELICIANO MEJIA whose telephone number is (571)270-5994. The examiner can normally be reached on Monday thru Friday 7:30am to 5:00pm EST.

If attempts to reach the examiner by telephone are unsuccessful, the examiner's supervisor, Saleh Najjar can be reached on (571) 272-4006. The fax phone number for the organization where this application or proceeding is assigned is 571-273-8300.

Information regarding the status of an application may be obtained from the Patent Application Information Retrieval (PAIR) system. Status information for published applications may be obtained from either Private PAIR or Public PAIR. Status information for unpublished applications is available through Private PAIR only. For more information about the PAIR system, see http://pair-direct.uspto.gov. Should you have questions on access to the Private PAIR system, contact the Electronic Business Center (EBC) at 866-217-9197 (toll-free). If you would like assistance from a USPTO Customer Service Representative or access to the automated information system, call 800-786-9199 (IN USA OR CANADA) or 571-272-1000.

/F. M./ 10/17/2014
Examiner, Art Unit 2492

***

/SALEH NAJJAR/
Supervisory Patent Examiner, Art Unit 2492

Notice of References Cited	Application/Control No. 13/618,298	Applicant(s)/Patent Under Reexamination BURCHFIELD ET AL.	
	Examiner FELICIANO MEJIA	Art Unit 2492	Page 1 of 1

U.S. PATENT DOCUMENTS

*		Document Number Country Code-Number-Kind Code	Date MM-YYYY	Name	Classification
*	A	US-2006/0288409 A1	12-2006	Bartal et al.	726/011
*	B	US-2013/0019277 A1	01-2013	Chang et al.	726/1
	C	US-			
	D	US-			
	E	US-			
	F	US-			
	G	US-			
	H	US-			
	I	US-			
	J	US-			
	K	US-			
	L	US-			
	M	US-			

FOREIGN PATENT DOCUMENTS

*		Document Number Country Code-Number-Kind Code	Date MM-YYYY	Country	Name	Classification
	N					
	O					
	P					
	Q					
	R					
	S					
	T					

NON-PATENT DOCUMENTS

*		Include as applicable: Author, Title Date, Publisher, Edition or Volume, Pertinent Pages)
	U	
	V	
	W	
	X	

*A copy of this reference is not being furnished with this Office action. (See MPEP § 707.05(a).)
Dates in MM-YYYY format are publication dates. Classifications may be US or foreign.

Index of Claims	Application/Control No.	Applicant(s)/Patent Under Reexamination
	13618298	BURCHFIELD ET AL.
	Examiner	**Art Unit**
	FELICIANO MEJIA	2492

✓	Rejected	-	Cancelled	N	Non-Elected	A	Appeal
=	Allowed	÷	Restricted	I	Interference	O	Objected

☐ Claims renumbered in the same order as presented by applicant ☐ CPA ☐ T.D. ☐ R.1.47

CLAIM		DATE								
Final	Original	10/20/2014								
	1	✓								
	2	✓								
	3	✓								
	4	✓								
	5	✓								
	6	✓								
	7	✓								
	8	✓								
	9	✓								
	10	✓								
	11	✓								
	12	✓								
	13	✓								
	14	✓								
	15	✓								
	16	✓								
	17	✓								
	18	✓								
	19	✓								
	20	✓								

UNITED STATES PATENT AND TRADEMARK OFFICE

UNITED STATES DEPARTMENT OF COMMERCE
United States Patent and Trademark Office
Address: COMMISSIONER FOR PATENTS
P.O. Box 1450
Alexandria, Virginia 22313-1450
www.uspto.gov

BIB DATA SHEET

CONFIRMATION NO. 1015

SERIAL NUMBER	FILING or 371(c) DATE	CLASS	GROUP ART UNIT	ATTORNEY DOCKET NO.
13/618,298	09/14/2012 **RULE**	726	2492	YOR920120481US2

APPLICANTS

INVENTORS

Nancy Burchfield, Dana Point, CA;
Nathaniel Hang, Ladera Ranch, CA;
Rafah A. Hosn, New York, NY;
James Murray, Durham, NC;
Harigovind V. Ramasamy, Ossining, NY;

**** CONTINUING DATA ****************************

This application is a CON of 13/600,891 08/31/2012

**** FOREIGN APPLICATIONS ****************************

**** IF REQUIRED, FOREIGN FILING LICENSE GRANTED ****

09/28/2012

Foreign Priority claimed	☐ Yes ☑ No	☐ Met after Allowance	STATE OR COUNTRY	SHEETS DRAWINGS	TOTAL CLAIMS	INDEPENDENT CLAIMS
35 USC 119(a-d) conditions met	☐ Yes ☑ No		CA	5	20	2
Verified and Acknowledged	/FELICIANO S MEJIA/ Examiner's Signature	Initials				

ADDRESS

RYAN, MASON & LEWIS, LLP
1175 Post Road East
2nd Floor
Westport, CT 06880
UNITED STATES

TITLE

Automatically Recommending Firewall Rules During Enterprise Information Technology Transformation

FILING FEE RECEIVED		
1250	FEES: Authority has been given in Paper No._____ to charge/credit DEPOSIT ACCOUNT No._____ for following:	☐ All Fees ☐ 1.16 Fees (Filing) ☐ 1.17 Fees (Processing Ext. of time) ☐ 1.18 Fees (Issue) ☐ Other _____ ☐ Credit

PTO/SB/08a (01-10)
Approved for use through 07/31/2012. OMB 0651-0031
U.S. Patent and Trademark Office; U.S. DEPARTMENT OF COMMERCE
Under the Paperwork Reduction Act of 1995, no persons are required to respond to a collection of information unless it contains a valid OMB control number.

INFORMATION DISCLOSURE STATEMENT BY APPLICANT

(Not for submission under 37 CFR 1.99)

Application Number	13618298
Filing Date	2012-09-14
First Named Inventor	Nancy Burchfield et al.
Art Unit	1638
Examiner Name	TBD
Attorney Docket Number	YOR920120481US2

U.S.PATENTS Remove

Examiner Initial*	Cite No	Patent Number	Kind Code[1]	Issue Date	Name of Patentee or Applicant of cited Document	Pages,Columns,Lines where Relevant Passages or Relevant Figures Appear
	1	7392539	B2	2008-06-24	Brooks et al.	
	2	7809817	B2	2010-10-05	Hillier, Andrew D.	
	3	7966659	B1	2011-06-21	Wilkinson et al.	
	4	8060553	B2	2011-11-15	Mamou et al.	
	5	8272031	B2	2012-09-18	Abderrazzaq et al.	
	6	8516241	B2	2013-08-20	Chang et al.	
	7	8671222	B2	2014-03-11	Gass et al.	
	8	8706771	B2	2014-04-22	Gass et al.	

If you wish to add additional U.S. Patent citation information please click the Add button. Add

ALL REFERENCES CONSIDERED EXCEPT WHERE LINED THROUGH. /F.M./

Receipt date: 08/12/2014	Application Number	13618298	13618298 - GAU: 2492
INFORMATION DISCLOSURE STATEMENT BY APPLICANT (**Not for submission under 37 CFR 1.99)**	Filing Date	2012-09-14	
	First Named Inventor	Nancy Burchfield et al.	
	Art Unit	1638	
	Examiner Name	TBD	
	Attorney Docket Number	YOR920120481US2	

U.S.PATENT APPLICATION PUBLICATIONS						Remove
Examiner Initial*	Cite No	Publication Number	Kind Code[1]	Publication Date	Name of Patentee or Applicant of cited Document	Pages,Columns,Lines where Relevant Passages or Relevant Figures Appear
	1	20020133579	A1	2002-09-19	Bernhardt et al.	
	2	20030037327	A1	2003-02-20	Cicciarelli et al.	
	3	20030236690	A1	2003-12-25	Johnston-Watt et al.	
	4	20040039942	A1	2004-02-26	Cooper et al.	
	5	20040199609	A1	2004-10-07	Papatla et al.	
	6	20050015471	A1	2005-01-20	Zhang et at.	
	7	20050216897	A1	2005-09-29	Amrhein et al.	
	8	20060047720	A1	2006-03-02	Kulkarni et al.	
	9	20070006122	A1	2007-01-04	Bailey et al.	

ALL REFERENCES CONSIDERED EXCEPT WHERE LINED THROUGH. /F.M./

	10	20070250615	A1	2007-10-25	Hillier, Andrew D.	
	11	20070250621	A1	2007-10-25	Hillier, Andrew D.	
	12	20070282982	A1	2007-12-06	Childress et al.	
	13	20100064341	A1	2010-03-11	Aldera, Carlo	
	14	20100095348	A1	2010-04-15	Foster et al.	
	15	20100238945	A1	2010-09-23	McKernan et al.	
	16	20100332401	A1	2010-12-30	Prahlad et al.	
	17	20100333116	A1	2010-12-30	Prahlad et al.	
	18	20100332818	A1	2010-12-30	Prahlad et al.	
	19	20100332479	A1	2010-12-30	Prahlad et al.	
	20	20100332456	A1	2010-12-30	Prahlad et al.	

	21	20100332454	A1	2010-12-30	Prahlad et al.	
	22	20110078211	A1	2011-03-31	Gass et al.	
	23	20110072504	A1	2011-03-24	Abderrazzaq et al.	
	24	20110283269	A1	2011-11-17	Gass et al.	
	25	20110282995	A1	2011-11-17	Gass et al.	
	26	20110283270	A1	2011-11-17	Gass et al.	
	27	20110302647	A1	2011-12-08	Bhattacharya et al.	
	28	20110296391	A1	2011-12-01	Gass et al.	
	29	20130019277	A1	2013-01-17	Chang et al.	
	30	20130191531	A1	2013-07-25	Kruglick, Ezekiel	
	31	20130276066	A1	2013-10-17	Buehl, Matthias	

Receipt date: 08/12/2014	Application Number	13618298	13618298 - GAU: 2492
INFORMATION DISCLOSURE STATEMENT BY APPLICANT (**Not for submission under 37 CFR 1.99)**	Filing Date	2012-09-14	
	First Named Inventor	Nancy Burchfield et al.	
	Art Unit	1638	
	Examiner Name	TBD	
	Attorney Docket Number	YOR920120481US2	

	32	20130339882	A1	2013-12-19	Owen et al.	

If you wish to add additional U.S. Published Application citation information please click the Add button. Add

FOREIGN PATENT DOCUMENTS Remove

Examiner Initial*	Cite No	Foreign Document Number[3]	Country Code[2] ¡	Kind Code[4]	Publication Date	Name of Patentee or Applicant of cited Document	Pages,Columns,Lines where Relevant Passages or Relevant Figures Appear	T[5]
	1							☐

If you wish to add additional Foreign Patent Document citation information please click the Add button Add

NON-PATENT LITERATURE DOCUMENTS Remove

Examiner Initials*	Cite No	Include name of the author (in CAPITAL LETTERS), title of the article (when appropriate), title of the item (book, magazine, journal, serial, symposium, catalog, etc), date, pages(s), volume-issue number(s), publisher, city and/or country where published.	T[5]
	1		☐

If you wish to add additional non-patent literature document citation information please click the Add button Add

EXAMINER SIGNATURE

Examiner Signature	/Feliciano Mejia/ (10/15/2014)	Date Considered	10/15/2014

*EXAMINER: Initial if reference considered, whether or not citation is in conformance with MPEP 609. Draw line through a citation if not in conformance and not considered. Include copy of this form with next communication to applicant.

[1] See Kind Codes of USPTO Patent Documents at www.USPTO.GOV or MPEP 901.04. [2] Enter office that issued the document, by the two-letter code (WIPO Standard ST.3). [3] For Japanese patent documents, the indication of the year of the reign of the Emperor must precede the serial number of the patent document. [4] Kind of document by the appropriate symbols as indicated on the document under WIPO Standard ST.16 if possible. [5] Applicant is to place a check mark here if English language translation is attached.

Receipt date: 08/12/2014	Application Number	13618298	13618298 - GAU: 2492
INFORMATION DISCLOSURE STATEMENT BY APPLICANT (**Not for submission under 37 CFR 1.99)**	Filing Date	2012-09-14	
	First Named Inventor	Nancy Burchfield et al.	
	Art Unit	1638	
	Examiner Name	TBD	
	Attorney Docket Number	YOR920120481US2	

CERTIFICATION STATEMENT

Please see 37 CFR 1.97 and 1.98 to make the appropriate selection(s):

☐ That each item of information contained in the information disclosure statement was first cited in any communication from a foreign patent office in a counterpart foreign application not more than three months prior to the filing of the information disclosure statement. See 37 CFR 1.97(e)(1).

OR

☒ That no item of information contained in the information disclosure statement was cited in a communication from a foreign patent office in a counterpart foreign application, and, to the knowledge of the person signing the certification after making reasonable inquiry, no item of information contained in the information disclosure statement was known to any individual designated in 37 CFR 1.56(c) more than three months prior to the filing of the information disclosure statement. See 37 CFR 1.97(e)(2).

☐ See attached certification statement.

☐ The fee set forth in 37 CFR 1.17 (p) has been submitted herewith.

☐ A certification statement is not submitted herewith.

SIGNATURE

A signature of the applicant or representative is required in accordance with CFR 1.33, 10.18. Please see CFR 1.4(d) for the form of the signature.

Signature	/Michael J. Cooper/	Date (YYYY-MM-DD)	2014-08-12
Name/Print	Michael J. Cooper	Registration Number	57749

This collection of information is required by 37 CFR 1.97 and 1.98. The information is required to obtain or retain a benefit by the public which is to file (and by the USPTO to process) an application. Confidentiality is governed by 35 U.S.C. 122 and 37 CFR 1.14. This collection is estimated to take 1 hour to complete, including gathering, preparing and submitting the completed application form to the USPTO. Time will vary depending upon the individual case. Any comments on the amount of time you require to complete this form and/or suggestions for reducing this burden, should be sent to the Chief Information Officer, U.S. Patent and Trademark Office, U.S. Department of Commerce, P.O. Box 1450, Alexandria, VA 22313-1450. DO NOT SEND FEES OR COMPLETED FORMS TO THIS ADDRESS. **SEND TO: Commissioner for Patents, P.O. Box 1450, Alexandria, VA 22313-1450.**

ALL REFERENCES CONSIDERED EXCEPT WHERE LINED THROUGH. /F.M./

Privacy Act Statement

The Privacy Act of 1974 (P.L. 93-579) requires that you be given certain information in connection with your submission of the attached form related to a patent application or patent. Accordingly, pursuant to the requirements of the Act, please be advised that: (1) the general authority for the collection of this information is 35 U.S.C. 2(b)(2); (2) furnishing of the information solicited is voluntary; and (3) the principal purpose for which the information is used by the U.S. Patent and Trademark Office is to process and/or examine your submission related to a patent application or patent. If you do not furnish the requested information, the U.S. Patent and Trademark Office may not be able to process and/or examine your submission, which may result in termination of proceedings or abandonment of the application or expiration of the patent.

The information provided by you in this form will be subject to the following routine uses:

1. The information on this form will be treated confidentially to the extent allowed under the Freedom of Information Act (5 U.S.C. 552) and the Privacy Act (5 U.S.C. 552a). Records from this system of records may be disclosed to the Department of Justice to determine whether the Freedom of Information Act requires disclosure of these record s.

2. A record from this system of records may be disclosed, as a routine use, in the course of presenting evidence to a court, magistrate, or administrative tribunal, including disclosures to opposing counsel in the course of settlement negotiations.

3. A record in this system of records may be disclosed, as a routine use, to a Member of Congress submitting a request involving an individual, to whom the record pertains, when the individual has requested assistance from the Member with respect to the subject matter of the record.

4. A record in this system of records may be disclosed, as a routine use, to a contractor of the Agency having need for the information in order to perform a contract. Recipients of information shall be required to comply with the requirements of the Privacy Act of 1974, as amended, pursuant to 5 U.S.C. 552a(m).

5. A record related to an International Application filed under the Patent Cooperation Treaty in this system of records may be disclosed, as a routine use, to the International Bureau of the World Intellectual Property Organization, pursuant to the Patent Cooperation Treaty.

6. A record in this system of records may be disclosed, as a routine use, to another federal agency for purposes of National Security review (35 U.S.C. 181) and for review pursuant to the Atomic Energy Act (42 U.S.C. 218(c)).

7. A record from this system of records may be disclosed, as a routine use, to the Administrator, General Services, or his/her designee, during an inspection of records conducted by GSA as part of that agency's responsibility to recommend improvements in records management practices and programs, under authority of 44 U.S.C. 2904 and 2906. Such disclosure shall be made in accordance with the GSA regulations governing inspection of records for this purpose, and any other relevant (i.e., GSA or Commerce) directive. Such disclosure shall not be used to make determinations about individuals.

8. A record from this system of records may be disclosed, as a routine use, to the public after either publication of the application pursuant to 35 U.S.C. 122(b) or issuance of a patent pursuant to 35 U.S.C. 151. Further, a record may be disclosed, subject to the limitations of 37 CFR 1.14, as a routine use, to the public if the record was filed in an application which became abandoned or in which the proceedings were terminated and which application is referenced by either a published application, an application open to public inspections or an issued patent.

9. A record from this system of records may be disclosed, as a routine use, to a Federal, State, or local law enforcement agency, if the USPTO becomes aware of a violation or potential violation of law or regulation.

ALL REFERENCES CONSIDERED EXCEPT WHERE LINED THROUGH. /F.M./

PTO/SB/08a (01-10)
Approved for use through 07/31/2012. OMB 0651-0031
U.S. Patent and Trademark Office; U.S. DEPARTMENT OF COMMERCE
Under the Paperwork Reduction Act of 1995, no persons are required to respond to a collection of information unless it contains a valid OMB control number.

INFORMATION DISCLOSURE STATEMENT BY APPLICANT (**Not for submission under 37 CFR 1.99)**	Application Number	
	Filing Date	2012-09-14
	First Named Inventor	Nancy Burchfield et al.
	Art Unit	TBD
	Examiner Name	TBD
	Attorney Docket Number	YOR920120481US2

U.S.PATENTS						Remove
Examiner Initial*	Cite No	Patent Number	Kind Code[1]	Issue Date	Name of Patentee or Applicant of cited Document	Pages,Columns,Lines where Relevant Passages or Relevant Figures Appear
	1					
If you wish to add additional U.S. Patent citation information please click the Add button.						Add

U.S.PATENT APPLICATION PUBLICATIONS						Remove
Examiner Initial*	Cite No	Publication Number	Kind Code[1]	Publication Date	Name of Patentee or Applicant of cited Document	Pages,Columns,Lines where Relevant Passages or Relevant Figures Appear
	1					
If you wish to add additional U.S. Published Application citation information please click the Add button.						Add

FOREIGN PATENT DOCUMENTS								Remove
Examiner Initial*	Cite No	Foreign Document Number[3]	Country Code[2] ¡	Kind Code[4]	Publication Date	Name of Patentee or Applicant of cited Document	Pages,Columns,Lines where Relevant Passages or Relevant Figures Appear	T[5]
	1							☐
If you wish to add additional Foreign Patent Document citation information please click the Add button								Add

NON-PATENT LITERATURE DOCUMENTS			Remove
Examiner Initials*	Cite No	Include name of the author (in CAPITAL LETTERS), title of the article (when appropriate), title of the item (book, magazine, journal, serial, symposium, catalog, etc), date, pages(s), volume-issue number(s), publisher, city and/or country where published.	T[5]

ALL REFERENCES CONSIDERED EXCEPT WHERE LINED THROUGH. /F.M./

Receipt date: 09/14/2012	Application Number	13618298 - GAU: 2492
INFORMATION DISCLOSURE STATEMENT BY APPLICANT (**Not for submission under 37 CFR 1.99)**	Filing Date	2012-09-14
	First Named Inventor	Nancy Burchfield et al.
	Art Unit	TBD
	Examiner Name	TBD
	Attorney Docket Number	YOR920120481US2

	1	ABASSI et al., A Model for Specification and Validation of Security Policies in Communication Networks: The Firewall Case, 2008.	☐
	2	ABASSI et al., Towards an Automated Firewall Security Policies Validation Process, 2008.	☐
	3	ADEL et al., Policy Segmentation for Intelligent Firewall Testing, 2005.	☐
	4	AL-HAJ et al., Measuring Firewall Security, 2011.	☐
	5	AL-SHAER et al., Conflict Classification and Analysis of Distributed Firewall Policies, 2005.	☐
	6	AL-SHAER et al., Firewall Policy Advisor for Anomaly Discovery and Rule Editing, 2003.	☐
	7	AL-SHAER et al., Management and Translation of Filtering Security Policies, 2003.	☐
	8	AL-SHAER et al., Discovery of Policy Anomalies in Distributed Firewalls, 2004.	☐
	9	AL-SHAER et al., Modeling and Management of Firewall Policies, 2004.	☐
	10	Youssef et al., Systematic Deployment of Network Security Policy in Centralized and Distributed Firewalls, 2011.	☐
	11	EL-ATAWY et al., An Automated Framework for Validating Firewall Policy Enforcement, 2007.	☐

ALL REFERENCES CONSIDERED EXCEPT WHERE LINED THROUGH. /F.M./

Receipt date: 09/14/2012	Application Number	13618298 - GAU: 2492
INFORMATION DISCLOSURE STATEMENT BY APPLICANT (**Not for submission under 37 CFR 1.99)**	Filing Date	2012-09-14
	First Named Inventor	Nancy Burchfield et al.
	Art Unit	TBD
	Examiner Name	TBD
	Attorney Docket Number	YOR920120481US2

	12	GOLNABI et al., Analysis of Firewall Policy Rules Using Data Mining Technique, 2006.	☐
	13	HAMED et al. Taxonomy of Conflicts in Network Security Policies, 2006.	☐
	14	HASSAN, Algorithms for Verifying Firewall and Router Access Lists, 2003.	☐
	15	HASSAN et al., A Framework for Translating a High Level Security Policy Into Low Level Security Mechanisms, 2009.	☐
	16	KOTENKO et al., Verification of Security Policy Filtering Rules by Model Checking, 2011.	☐
	17	LIU et al., Firewall Policy Queries, 2009.	☐
	18	MAYER et al., Fang: a Firewall Analysis Engine, 2000.	☐
	19	RAHMAN et al., A Declarative Approach for Global Network Security Configuration Verification and Evaluation, 2011.	☐
	20	SALAH et al., A Probing Technique for Discovering Last-Matching Rules of a Network Firewall, 2008.	☐
	21	YI et al., Inconsistency Detection System for Security Policy and Firewall Policy, 2010.	☐
	22	YIWEN et al., Verify Consistency Between Security Policy and Firewall Policy with Answer Set Programming, 2008.	☐

ALL REFERENCES CONSIDERED EXCEPT WHERE LINED THROUGH. /F.M./

Receipt date: 09/14/2012	Application Number	13618298 - GAU: 2492
INFORMATION DISCLOSURE STATEMENT BY APPLICANT (**Not for submission under 37 CFR 1.99)**	Filing Date	2012-09-14
	First Named Inventor	Nancy Burchfield et al.
	Art Unit	TBD
	Examiner Name	TBD
	Attorney Docket Number	YOR920120481US2

If you wish to add additional non-patent literature document citation information please click the Add button			Add
EXAMINER SIGNATURE			
Examiner Signature	/Feliciano Mejia/ (10/15/2014)	Date Considered	10/15/2014

*EXAMINER: Initial if reference considered, whether or not citation is in conformance with MPEP 609. Draw line through a citation if not in conformance and not considered. Include copy of this form with next communication to applicant.

[1] See Kind Codes of USPTO Patent Documents at www.USPTO.GOV or MPEP 901.04. [2] Enter office that issued the document, by the two-letter code (WIPO Standard ST.3). [3] For Japanese patent documents, the indication of the year of the reign of the Emperor must precede the serial number of the patent document. [4] Kind of document by the appropriate symbols as indicated on the document under WIPO Standard ST.16 if possible. [5] Applicant is to place a check mark here if English language translation is attached.

ALL REFERENCES CONSIDERED EXCEPT WHERE LINED THROUGH. /F.M./

Receipt date: 09/14/2012	Application Number	13618298 - GAU: 2492
INFORMATION DISCLOSURE STATEMENT BY APPLICANT (**Not for submission under 37 CFR 1.99)**	Filing Date	2012-09-14
	First Named Inventor	Nancy Burchfield et al.
	Art Unit	TBD
	Examiner Name	TBD
	Attorney Docket Number	YOR920120481US2

CERTIFICATION STATEMENT

Please see 37 CFR 1.97 and 1.98 to make the appropriate selection(s):

☐ That each item of information contained in the information disclosure statement was first cited in any communication from a foreign patent office in a counterpart foreign application not more than three months prior to the filing of the information disclosure statement. See 37 CFR 1.97(e)(1).

OR

☐ That no item of information contained in the information disclosure statement was cited in a communication from a foreign patent office in a counterpart foreign application, and, to the knowledge of the person signing the certification after making reasonable inquiry, no item of information contained in the information disclosure statement was known to any individual designated in 37 CFR 1.56(c) more than three months prior to the filing of the information disclosure statement. See 37 CFR 1.97(e)(2).

☐ See attached certification statement.

☐ The fee set forth in 37 CFR 1.17 (p) has been submitted herewith.

☒ A certification statement is not submitted herewith.

SIGNATURE

A signature of the applicant or representative is required in accordance with CFR 1.33, 10.18. Please see CFR 1.4(d) for the form of the signature.

Signature	/Michael J. Cooper/	Date (YYYY-MM-DD)	2012-09-14
Name/Print	Michael J. Cooper	Registration Number	57749

This collection of information is required by 37 CFR 1.97 and 1.98. The information is required to obtain or retain a benefit by the public which is to file (and by the USPTO to process) an application. Confidentiality is governed by 35 U.S.C. 122 and 37 CFR 1.14. This collection is estimated to take 1 hour to complete, including gathering, preparing and submitting the completed application form to the USPTO. Time will vary depending upon the individual case. Any comments on the amount of time you require to complete this form and/or suggestions for reducing this burden, should be sent to the Chief Information Officer, U.S. Patent and Trademark Office, U.S. Department of Commerce, P.O. Box 1450, Alexandria, VA 22313-1450. DO NOT SEND FEES OR COMPLETED FORMS TO THIS ADDRESS. **SEND TO: Commissioner for Patents, P.O. Box 1450, Alexandria, VA 22313-1450.**

ALL REFERENCES CONSIDERED EXCEPT WHERE LINED THROUGH. /F.M./

Privacy Act Statement

The Privacy Act of 1974 (P.L. 93-579) requires that you be given certain information in connection with your submission of the attached form related to a patent application or patent. Accordingly, pursuant to the requirements of the Act, please be advised that: (1) the general authority for the collection of this information is 35 U.S.C. 2(b)(2); (2) furnishing of the information solicited is voluntary; and (3) the principal purpose for which the information is used by the U.S. Patent and Trademark Office is to process and/or examine your submission related to a patent application or patent. If you do not furnish the requested information, the U.S. Patent and Trademark Office may not be able to process and/or examine your submission, which may result in termination of proceedings or abandonment of the application or expiration of the patent.

The information provided by you in this form will be subject to the following routine uses:

1. The information on this form will be treated confidentially to the extent allowed under the Freedom of Information Act (5 U.S.C. 552) and the Privacy Act (5 U.S.C. 552a). Records from this system of records may be disclosed to the Department of Justice to determine whether the Freedom of Information Act requires disclosure of these record s.

2. A record from this system of records may be disclosed, as a routine use, in the course of presenting evidence to a court, magistrate, or administrative tribunal, including disclosures to opposing counsel in the course of settlement negotiations.

3. A record in this system of records may be disclosed, as a routine use, to a Member of Congress submitting a request involving an individual, to whom the record pertains, when the individual has requested assistance from the Member with respect to the subject matter of the record.

4. A record in this system of records may be disclosed, as a routine use, to a contractor of the Agency having need for the information in order to perform a contract. Recipients of information shall be required to comply with the requirements of the Privacy Act of 1974, as amended, pursuant to 5 U.S.C. 552a(m).

5. A record related to an International Application filed under the Patent Cooperation Treaty in this system of records may be disclosed, as a routine use, to the International Bureau of the World Intellectual Property Organization, pursuant to the Patent Cooperation Treaty.

6. A record in this system of records may be disclosed, as a routine use, to another federal agency for purposes of National Security review (35 U.S.C. 181) and for review pursuant to the Atomic Energy Act (42 U.S.C. 218(c)).

7. A record from this system of records may be disclosed, as a routine use, to the Administrator, General Services, or his/her designee, during an inspection of records conducted by GSA as part of that agency's responsibility to recommend improvements in records management practices and programs, under authority of 44 U.S.C. 2904 and 2906. Such disclosure shall be made in accordance with the GSA regulations governing inspection of records for this purpose, and any other relevant (i.e., GSA or Commerce) directive. Such disclosure shall not be used to make determinations about individuals.

8. A record from this system of records may be disclosed, as a routine use, to the public after either publication of the application pursuant to 35 U.S.C. 122(b) or issuance of a patent pursuant to 35 U.S.C. 151. Further, a record may be disclosed, subject to the limitations of 37 CFR 1.14, as a routine use, to the public if the record was filed in an application which became abandoned or in which the proceedings were terminated and which application is referenced by either a published application, an application open to public inspections or an issued patent.

9. A record from this system of records may be disclosed, as a routine use, to a Federal, State, or local law enforcement agency, if the USPTO becomes aware of a violation or potential violation of law or regulation.

ALL REFERENCES CONSIDERED EXCEPT WHERE LINED THROUGH. /F.M./

Search Notes	Application/Control No.	Applicant(s)/Patent Under Reexamination
	13618298	BURCHFIELD ET AL.
	Examiner	**Art Unit**
	FELICIANO MEJIA	2492

CPC- SEARCHED

Symbol	Date	Examiner
H04L 41/22, 63/0263, 63/029, 63/0218, 63/0227, 63/20	10/15/2014	F.M.

CPC COMBINATION SETS - SEARCHED

Symbol	Date	Examiner

US CLASSIFICATION SEARCHED

Class	Subclass	Date	Examiner
709	220	10/15/2014	F.M.
726	1 and 11	10/15/2014	F.M.

SEARCH NOTES

Search Notes	Date	Examiner
East Inventor Search	10/15/2014	F.M.
CPC and USPC Class / Sub Class Search	10/15/2014	F.M.
IDS Reference Search	10/15/2014	F.M.
See Attached Search History	10/20/2014	F.M.

INTERFERENCE SEARCH

US Class/ CPC Symbol	US Subclass / CPC Group	Date	Examiner

EAST Search History

EAST Search History (Prior Art)

Ref #	Hits	Search Query	DBs	Default Operator	Plurals	Time Stamp
L1	2	"20130019277".pn.	US-PGPUB; USPAT; USOCR; EPO; JPO; DERWENT	OR	ON	2014/10/20 10:15
L2	0	"200130019277".pn.	US-PGPUB; USPAT; USOCR; EPO; JPO; DERWENT	OR	ON	2014/10/20 10:52
L3	2	"20130019277".pn.	US-PGPUB; USPAT; USOCR; EPO; JPO; DERWENT	OR	ON	2014/10/20 10:54
S1	9	((Nancy) near2 (Burchfield)).INV.	US-PGPUB; USPAT	OR	ON	2014/10/15 15:12
S2	4	((Nathaniel) near2 (Hang)).INV.	US-PGPUB; USPAT	OR	ON	2014/10/15 15:13
S3	47	((Rafah) near2 (Hosn)).INV.	US-PGPUB; USPAT	OR	ON	2014/10/15 15:14
S4	480	((James) near2 (Murray)).INV.	US-PGPUB; USPAT	OR	ON	2014/10/15 15:14
S5	26	((Harigovind) near2 (Ramasamy)).INV.	US-PGPUB; USPAT	OR	ON	2014/10/15 15:14
S6	540	S1 S2 S3 S4 S5	US-PGPUB;	OR	ON	2014/10/15 15:15

			USPAT; USOCR; EPO; JPO; DERWENT			
S8	2060	((automat$6 dynamic$4 system$5) WITH ((config$7 modif$7 chang$3 upgrad$3 migrat$3) NEAR3 (fire$1wall filter)) WITH (rule protocol condition))	US-PGPUB; USPAT; USOCR; EPO; JPO; DERWENT	OR	ON	2014/10/15 15:25
S9	25127	(((ip (internet ADJ protocol)) NEAR3 (address (port socket)) WITH (setting parameter)))	US-PGPUB; USPAT; USOCR; EPO; JPO; DERWENT	OR	ON	2014/10/15 15:29
S10	171	S8 AND S9	US-PGPUB; USPAT; USOCR; EPO; JPO; DERWENT	OR	ON	2014/10/15 15:29
S11	29	S10 AND ((H04L41/22 OR H04L63/0263 OR H04L63/029 OR H04L63/0218 OR H04L63/0227 OR H04L41/0893 OR H04L63/20 OR H04L63/0236 OR H04L67/34 OR H04L41/082 OR H04L41/0883).CPC. AND (726/11 OR 709/224 OR 709/220).CCLS.)	US-PGPUB; USPAT; USOCR; EPO; JPO; DERWENT	OR	ON	2014/10/15 15:43
S12	3	S6 AND ((H04L41/22 OR H04L63/0263 OR H04L63/029 OR H04L63/0218 OR H04L63/0227 OR H04L41/0893 OR H04L63/20 OR H04L63/0236 OR H04L67/34 OR H04L41/082 OR H04L41/0883).CPC. AND (726/11 OR 709/224 OR 709/220).CCLS.)	US-PGPUB; USPAT; USOCR; EPO; JPO; DERWENT	OR	ON	2014/10/15 15:43
S13	2	"20140068701".pn.	US-PGPUB; USPAT; USOCR; EPO; JPO; DERWENT	OR	ON	2014/10/15 16:00
S16	0	S10 AND S13	US-PGPUB; USPAT; USOCR; EPO; JPO; DERWENT	OR	ON	2014/10/15 16:02
S17	2	S8 AND S13	US-	OR	ON	2014/10/15

			PGPUB; USPAT; USOCR; EPO; JPO; DERWENT			16:02
S18	4	S11 AND (((gener$3 neutral) NEAR3 (fire$1wall filter)) WITH (polic$3 rule))	US-PGPUB; USPAT; USOCR; EPO; JPO; DERWENT	OR	ON	2014/10/15 16:30
S20	33	S8 AND (((general generic neutral) NEAR3 (fire$1wall filter)) WITH (polic$3 rule))	US-PGPUB; USPAT; USOCR; EPO; JPO; DERWENT	OR	ON	2014/10/15 16:42
S21	101	((automat$6 dynamic$4 system$5) SAME (((general generic neutral (vendor$1neutral)) NEAR3 (fire$1wall filter)) WITH (polic$3 rule)))	US-PGPUB; USPAT; USOCR; EPO; JPO; DERWENT	OR	ON	2014/10/15 16:52
S22	3	((automat$6 dynamic$4 system$5) SAME (((vendor$1specific) NEAR3 (fire$1wall filter)) WITH (polic$3 rule)))	US-PGPUB; USPAT; USOCR; EPO; JPO; DERWENT	OR	ON	2014/10/15 16:59
S23	80	("20020133579" | "20030037327" | "20030236690" | "20040039942" | "20040199609" | "20050015471" | "20050216897" | "20060047720" | "20070006122" | "20070250615" | "20070250621" | "20070282982" | "20100064341" | "20100095348" | "20100238945" | "20100332401" | "20100332454" | "20100332456" | "20100332479" | "20100332818" | "20100333116" | "20110072504" | "20110078211" | "20110282995" | "20110283269" | "20110283270" | "20110296391" | "20110302647" | "20130019277" | "20130191531" | "20130276066" | "20130339882" | "7392539" | "7809817" | "7966659" | "8060553" | "8272031" | "8516241" | "8671222" | "8706771").PN.	US-PGPUB; USPAT; USOCR; EPO; JPO; DERWENT	OR	ON	2014/10/16 11:47
S24	9	((Nancy) near2 (Burchfield)).INV.	US-PGPUB; USPAT	OR	ON	2014/10/16 11:48
S25	4	((Nathaniel) near2 (Hang)).INV.	US-PGPUB; USPAT	OR	ON	2014/10/16 11:48

S26	47	((Rafah) near2 (Hosn)).INV.	US-PGPUB; USPAT	OR	ON	2014/10/16 11:48
S27	480	((James) near2 (Murray)).INV.	US-PGPUB; USPAT	OR	ON	2014/10/16 11:48
S28	26	((Harigovind) near2 (Ramasamy)).INV.	US-PGPUB; USPAT	OR	ON	2014/10/16 11:48
S29	540	S24 S25 S26 S27 S28	US-PGPUB; USPAT; USOCR; EPO; JPO; DERWENT	OR	ON	2014/10/16 11:48
S30	1	S23 AND S29	US-PGPUB; USPAT; USOCR; EPO; JPO; DERWENT	OR	ON	2014/10/16 11:48
S31	2060	((automat$6 dynamic$4 system$5) WITH ((config$7 modif$7 chang$3 upgrad$3 migrat$3) NEAR3 (fire$1wall filter)) WITH (rule protocol condition))	US-PGPUB; USPAT; USOCR; EPO; JPO; DERWENT	OR	ON	2014/10/16 11:50
S32	2	S23 AND S31	US-PGPUB; USPAT; USOCR; EPO; JPO; DERWENT	OR	ON	2014/10/16 11:50
S33	2	"20060288409".pn.	US-PGPUB; USPAT; USOCR; EPO; JPO; DERWENT	OR	ON	2014/10/16 11:55

EAST Search History (Interference)

<This search history is empty>

10/20/2014 11:04:35 AM

PTO/SB/08a (01-10)
Approved for use through 07/31/2012. OMB 0651-0031
U.S. Patent and Trademark Office; U.S. DEPARTMENT OF COMMERCE
Under the Paperwork Reduction Act of 1995, no persons are required to respond to a collection of information unless it contains a valid OMB control number.

INFORMATION DISCLOSURE STATEMENT BY APPLICANT

(Not for submission under 37 CFR 1.99)

Application Number	13618298
Filing Date	2012-09-14
First Named Inventor	Nancy Burchfield et al.
Art Unit	2492
Examiner Name	Feliciano S. Mejia
Attorney Docket Number	YOR920120481US2

U.S.PATENTS Remove

Examiner Initial*	Cite No	Patent Number	Kind Code[1]	Issue Date	Name of Patentee or Applicant of cited Document	Pages,Columns,Lines where Relevant Passages or Relevant Figures Appear
	1	6820266	B1	2004-11-16	Minakawa et al.	
	2	7213027	B1	2007-05-01	Kominek et al.	
	3	7392539	B2	2008-06-24	Brooks et al.	
	4	7472412	B2	2008-12-30	Wolf et al.	
	5	7539741	B2	2009-05-26	Liong et al.	
	6	7747416	B2	2010-06-29	Deininger et al.	
	7	7809817	B2	2010-10-05	Hillier, Andrew D.	
	8	7853687	B2	2010-12-14	Le Moigne et al.	

INFORMATION DISCLOSURE STATEMENT BY APPLICANT (Not for submission under 37 CFR 1.99)		
	Application Number	13618298
	Filing Date	2012-09-14
	First Named Inventor	Nancy Burchfield et al.
	Art Unit	2492
	Examiner Name	Feliciano S. Mejia
	Attorney Docket Number	YOR920120481US2

	9	7966659	B1	2011-06-21	Wilkinson et al.	
	10	8060553	B2	2011-11-15	Mamou et al.	
	11	8272031	B2	2012-09-18	Abderrazzaq et al.	
	12	8291468	B1	2012-10-16	Chickering, Roger A.	
	13	8516241	B2	2013-08-20	Chang et al.	
	14	8607300	B2	2013-12-10	Wang, Haojin	
	15	8671222	B2	2014-03-11	Gass et al.	
	16	8706771	B2	2014-04-22	Gass et al.	

If you wish to add additional U.S. Patent citation information please click the Add button. Add

U.S.PATENT APPLICATION PUBLICATIONS Remove

Examiner Initial*	Cite No	Publication Number	Kind Code[1]	Publication Date	Name of Patentee or Applicant of cited Document	Pages,Columns,Lines where Relevant Passages or Relevant Figures Appear
	1	20020133579	A1	2002-09-19	Bernhardt et al.	

INFORMATION DISCLOSURE STATEMENT BY APPLICANT (Not for submission under 37 CFR 1.99)	Application Number	13618298
	Filing Date	2012-09-14
	First Named Inventor	Nancy Burchfield et al.
	Art Unit	2492
	Examiner Name	Feliciano S. Mejia
	Attorney Docket Number	YOR920120481US2

	2	20030037327	A1	2003-02-20	Cicciarelli et al.	
	3	20030133552	A1	2003-07-17	Pillai et al.	
	4	20030154071	A1	2003-08-14	Shreve, Gregory M.	
	5	20030236690	A1	2003-12-25	Johnston-Watt et al.	
	6	20040039942	A1	2004-02-26	Cooper et al.	
	7	20040199609	A1	2004-10-07	Papatla et al.	
	8	20050015471	A1	2005-01-20	Zhang et al.	
	9	20050091068	A1	2005-04-28	Ramamoorthy et al.	
	10	20050149721	A1	2005-07-07	Lu, Chih-Chung	
	11	20050216897	A1	2005-09-29	Amrhein et al.	
	12	20060047720	A1	2006-03-02	Kulkami et al.	

INFORMATION DISCLOSURE STATEMENT BY APPLICANT (Not for submission under 37 CFR 1.99)		
	Application Number	13618298
	Filing Date	2012-09-14
	First Named Inventor	Nancy Burchfield et al.
	Art Unit	2492
	Examiner Name	Feliciano S. Mejia
	Attorney Docket Number	YOR920120481US2

	13	20060242690	A1	2006-10-26	Wolf et al.	
	14	20060288409	A1	2006-12-21	Bartal et al.	
	15	20070006122	A1	2007-01-04	Bailey et al.	
	16	20070136813	A1	2007-06-14	Wong, Hsing-Kuo	
	17	20070250621	A1	2007-10-25	Hillier, Andrew D.	
	18	20070250615	A1	2007-10-25	Hillier, Andrew D.	
	19	20070282982	A1	2007-12-06	Childress et al.	
	20	20080222290	A1	2008-09-11	Le Moigne et al.	
	21	20090158302	A1	2009-06-18	Nicodemus et al.	
	22	20090158407	A1	2009-06-18	Nicodemus et al.	
	23	20100064341	A1	2010-03-11	Aldera, Carlo	

INFORMATION DISCLOSURE STATEMENT BY APPLICANT (Not for submission under 37 CFR 1.99)	Application Number	13618298
	Filing Date	2012-09-14
	First Named Inventor	Nancy Burchfield et al.
	Art Unit	2492
	Examiner Name	Feliciano S. Mejia
	Attorney Docket Number	YOR920120481US2

	24	20100095348	A1	2010-04-15	Foster et al.	
	25	20100238945	A1	2010-09-23	McKernan et al.	
	26	20100332818	A1	2010-12-30	Prahlad et al.	
	27	20100332479	A1	2010-12-30	Prahlad et al.	
	28	20100332456	A1	2010-12-30	Prahlad et al.	
	29	20100332454	A1	2010-12-30	Prahlad et al.	
	30	20100332401	A1	2010-12-30	Prahlad et al.	
	31	20100333116	A1	2010-12-30	Prahlad et al.	
	32	20110051715	A1	2011-03-05	Grunwald et al.	
	33	20110078211	A1	2011-03-31	Gass et al.	
	34	20110072504	A1	2011-03-24	Abderrazzaq et al.	

INFORMATION DISCLOSURE STATEMENT BY APPLICANT (Not for submission under 37 CFR 1.99)		
	Application Number	13618298
	Filing Date	2012-09-14
	First Named Inventor	Nancy Burchfield et al.
	Art Unit	2492
	Examiner Name	Feliciano S. Mejia
	Attorney Docket Number	YOR920120481US2

	35	20110282995	A1	2011-11-17	Gass et al.	
	36	20110283269	A1	2011-11-17	Gass et al.	
	37	20110283270	A1	2011-11-17	Gass et al.	
	38	20110302647	A1	2011-12-08	Bhattacharya et al.	
	39	20110296391	A1	2011-12-01	Gass et al.	
	40	20120033681	A1	2012-02-09	Ridel et al.	
	41	20130019277	A1	2013-01-17	Chang et al.	
	42	20130191531	A1	2013-07-25	Kruglick, Ezekiel	
	43	20130276066	A1	2013-10-17	Buehl, Matthias	
	44	20130339882	A1	2013-12-19	Owen et al.	

If you wish to add additional U.S. Published Application citation information please click the Add button. Add

FOREIGN PATENT DOCUMENTS Remove

INFORMATION DISCLOSURE STATEMENT BY APPLICANT (Not for submission under 37 CFR 1.99)	Application Number	13618298
	Filing Date	2012-09-14
	First Named Inventor	Nancy Burchfield et al.
	Art Unit	2492
	Examiner Name	Feliciano S. Mejia
	Attorney Docket Number	YOR920120481US2

Examiner Initial*	Cite No	Foreign Document Number[3]	Country Code[2] ¡	Kind Code[4]	Publication Date	Name of Patentee or Applicant of cited Document	Pages,Columns,Lines where Relevant Passages or Relevant Figures Appear	T[5]
	1							☐

If you wish to add additional Foreign Patent Document citation information please click the Add button Add

NON-PATENT LITERATURE DOCUMENTS Remove

Examiner Initials*	Cite No	Include name of the author (in CAPITAL LETTERS), title of the article (when appropriate), title of the item (book, magazine, journal, serial, symposium, catalog, etc), date, pages(s), volume-issue number(s), publisher, city and/or country where published.	T[5]
	1		☐

If you wish to add additional non-patent literature document citation information please click the Add button Add

EXAMINER SIGNATURE

Examiner Signature		Date Considered	

*EXAMINER: Initial if reference considered, whether or not citation is in conformance with MPEP 609. Draw line through a citation if not in conformance and not considered. Include copy of this form with next communication to applicant.

[1] See Kind Codes of USPTO Patent Documents at www.USPTO.GOV or MPEP 901.04. [2] Enter office that issued the document, by the two-letter code (WIPO Standard ST.3). [3] For Japanese patent documents, the indication of the year of the reign of the Emperor must precede the serial number of the patent document. [4] Kind of document by the appropriate symbols as indicated on the document under WIPO Standard ST.16 if possible. [5] Applicant is to place a check mark here if English language translation is attached.

INFORMATION DISCLOSURE STATEMENT BY APPLICANT (Not for submission under 37 CFR 1.99)	Application Number	13618298
	Filing Date	2012-09-14
	First Named Inventor	Nancy Burchfield et al.
	Art Unit	2492
	Examiner Name	Feliciano S. Mejia
	Attorney Docket Number	YOR920120481US2

CERTIFICATION STATEMENT

Please see 37 CFR 1.97 and 1.98 to make the appropriate selection(s):

☐ That each item of information contained in the information disclosure statement was first cited in any communication from a foreign patent office in a counterpart foreign application not more than three months prior to the filing of the information disclosure statement. See 37 CFR 1.97(e)(1).

OR

☒ That no item of information contained in the information disclosure statement was cited in a communication from a foreign patent office in a counterpart foreign application, and, to the knowledge of the person signing the certification after making reasonable inquiry, no item of information contained in the information disclosure statement was known to any individual designated in 37 CFR 1.56(c) more than three months prior to the filing of the information disclosure statement. See 37 CFR 1.97(e)(2).

☐ See attached certification statement.

☐ The fee set forth in 37 CFR 1.17 (p) has been submitted herewith.

☐ A certification statement is not submitted herewith.

SIGNATURE

A signature of the applicant or representative is required in accordance with CFR 1.33, 10.18. Please see CFR 1.4(d) for the form of the signature.

Signature	/Michael J. Cooper/	Date (YYYY-MM-DD)	2014-11-25
Name/Print	Michael J. Cooper	Registration Number	57749

This collection of information is required by 37 CFR 1.97 and 1.98. The information is required to obtain or retain a benefit by the public which is to file (and by the USPTO to process) an application. Confidentiality is governed by 35 U.S.C. 122 and 37 CFR 1.14. This collection is estimated to take 1 hour to complete, including gathering, preparing and submitting the completed application form to the USPTO. Time will vary depending upon the individual case. Any comments on the amount of time you require to complete this form and/or suggestions for reducing this burden, should be sent to the Chief Information Officer, U.S. Patent and Trademark Office, U.S. Department of Commerce, P.O. Box 1450, Alexandria, VA 22313-1450. DO NOT SEND FEES OR COMPLETED FORMS TO THIS ADDRESS. **SEND TO: Commissioner for Patents, P.O. Box 1450, Alexandria, VA 22313-1450.**

Privacy Act Statement

The Privacy Act of 1974 (P.L. 93-579) requires that you be given certain information in connection with your submission of the attached form related to a patent application or patent. Accordingly, pursuant to the requirements of the Act, please be advised that: (1) the general authority for the collection of this information is 35 U.S.C. 2(b)(2); (2) furnishing of the information solicited is voluntary; and (3) the principal purpose for which the information is used by the U.S. Patent and Trademark Office is to process and/or examine your submission related to a patent application or patent. If you do not furnish the requested information, the U.S. Patent and Trademark Office may not be able to process and/or examine your submission, which may result in termination of proceedings or abandonment of the application or expiration of the patent.

The information provided by you in this form will be subject to the following routine uses:

1. The information on this form will be treated confidentially to the extent allowed under the Freedom of Information Act (5 U.S.C. 552) and the Privacy Act (5 U.S.C. 552a). Records from this system of records may be disclosed to the Department of Justice to determine whether the Freedom of Information Act requires disclosure of these record s.

2. A record from this system of records may be disclosed, as a routine use, in the course of presenting evidence to a court, magistrate, or administrative tribunal, including disclosures to opposing counsel in the course of settlement negotiations.

3. A record in this system of records may be disclosed, as a routine use, to a Member of Congress submitting a request involving an individual, to whom the record pertains, when the individual has requested assistance from the Member with respect to the subject matter of the record.

4. A record in this system of records may be disclosed, as a routine use, to a contractor of the Agency having need for the information in order to perform a contract. Recipients of information shall be required to comply with the requirements of the Privacy Act of 1974, as amended, pursuant to 5 U.S.C. 552a(m).

5. A record related to an International Application filed under the Patent Cooperation Treaty in this system of records may be disclosed, as a routine use, to the International Bureau of the World Intellectual Property Organization, pursuant to the Patent Cooperation Treaty.

6. A record in this system of records may be disclosed, as a routine use, to another federal agency for purposes of National Security review (35 U.S.C. 181) and for review pursuant to the Atomic Energy Act (42 U.S.C. 218(c)).

7. A record from this system of records may be disclosed, as a routine use, to the Administrator, General Services, or his/her designee, during an inspection of records conducted by GSA as part of that agency's responsibility to recommend improvements in records management practices and programs, under authority of 44 U.S.C. 2904 and 2906. Such disclosure shall be made in accordance with the GSA regulations governing inspection of records for this purpose, and any other relevant (i.e., GSA or Commerce) directive. Such disclosure shall not be used to make determinations about individuals.

8. A record from this system of records may be disclosed, as a routine use, to the public after either publication of the application pursuant to 35 U.S.C. 122(b) or issuance of a patent pursuant to 35 U.S.C. 151. Further, a record may be disclosed, subject to the limitations of 37 CFR 1.14, as a routine use, to the public if the record was filed in an application which became abandoned or in which the proceedings were terminated and which application is referenced by either a published application, an application open to public inspections or an issued patent.

9. A record from this system of records may be disclosed, as a routine use, to a Federal, State, or local law enforcement agency, if the USPTO becomes aware of a violation or potential violation of law or regulation.

Electronic Acknowledgement Receipt

EFS ID:	20798978
Application Number:	13618298
International Application Number:	
Confirmation Number:	1015
Title of Invention:	Automatically Recommending Firewall Rules During Enterprise Information Technology Transformation
First Named Inventor/Applicant Name:	Nancy Burchfield
Customer Number:	48062
Filer:	Michael J. Cooper
Filer Authorized By:	
Attorney Docket Number:	YOR920120481US2
Receipt Date:	25-NOV-2014
Filing Date:	14-SEP-2012
Time Stamp:	15:48:39
Application Type:	Utility under 35 USC 111(a)

Payment information:

Submitted with Payment	no

File Listing:

Document Number	Document Description	File Name	File Size(Bytes)/ Message Digest	Multi Part /.zip	Pages (if appl.)
1	Information Disclosure Statement (IDS) Form (SB08)	YOR920120481US2_SupplementalIDS_11252014.pdf	614024 0b202c80a8e3909f14faf1b34d7368182cfe897f	no	9

Warnings:

Information:

Total Files Size (in bytes):	614024

This Acknowledgement Receipt evidences receipt on the noted date by the USPTO of the indicated documents, characterized by the applicant, and including page counts, where applicable. It serves as evidence of receipt similar to a Post Card, as described in MPEP 503.

New Applications Under 35 U.S.C. 111
If a new application is being filed and the application includes the necessary components for a filing date (see 37 CFR 1.53(b)-(d) and MPEP 506), a Filing Receipt (37 CFR 1.54) will be issued in due course and the date shown on this Acknowledgement Receipt will establish the filing date of the application.

National Stage of an International Application under 35 U.S.C. 371
If a timely submission to enter the national stage of an international application is compliant with the conditions of 35 U.S.C. 371 and other applicable requirements a Form PCT/DO/EO/903 indicating acceptance of the application as a national stage submission under 35 U.S.C. 371 will be issued in addition to the Filing Receipt, in due course.

New International Application Filed with the USPTO as a Receiving Office
If a new international application is being filed and the international application includes the necessary components for an international filing date (see PCT Article 11 and MPEP 1810), a Notification of the International Application Number and of the International Filing Date (Form PCT/RO/105) will be issued in due course, subject to prescriptions concerning national security, and the date shown on this Acknowledgement Receipt will establish the international filing date of the application.

Attorney Docket No. YOR920120481US2
Confirmation No. 1015

IN THE UNITED STATES PATENT AND TRADEMARK OFFICE

Patent Application

Applicant:	Burchfield et al.
Docket No.:	YOR920120481US2
Serial No.:	13/618,298
Filing Date:	September 14, 2012
Group:	2492
Examiner:	Feliciano S. Mejia

Title: Automatically Recommending Firewall Rules During Enterprise Information Technology Transformation

---

AMENDMENT AND RESPONSE TO OFFICE ACTION

Commissioner for Patents
P.O. Box 1450
Alexandria, VA 22313-1450

Sir:

In response to the Office Action dated October 23, 2014, Applicants submit the following amendments and remarks:

IN THE CLAIMS

1. (Currently Amended) An article of manufacture comprising a computer readable storage medium having computer readable instructions tangibly embodied thereon which, when implemented, cause a computer to carry out a plurality of method steps comprising:

obtaining at least one communication pattern occurring in a pre-transformation source environment by analyzing (i) one or more firewall configuration files and/or firewall log files associated with the source environment, (ii) one or more run-time network flows at the source environment, and (iii) one or more configured dependencies at one or more servers running on the source environment; ~~and~~

automatically generating one or more vendor-neutral firewall rules for ~~one or more~~ multiple intended firewall interfaces, on a per-interface basis, in a post-transformation target environment based on (i) the at least one communication pattern occurring in the source environment and ~~based on~~ (ii) information derived from the target environment, wherein the one or more vendor-neutral firewall rules contain multiple attributes and values associated therewith for configuring flow-control rules on a firewall device that is not specific to any particular vendor, and wherein said automatically generating comprises:

generating a transformed version of the at least one communication pattern by applying source-target host and internet protocol (IP) subnet mapping information to the at least one communication pattern;

generating an adjusted version of the at least one communication pattern by incorporating one or more communication requirements associated with the target environment to the transformed version of the at least one communication pattern; and

identifying a subset of the adjusted version of the at least one communication pattern to be utilized for each of the multiple intended firewall interface in the post-transformation target environment; and

automatically converting the one or more vendor-neutral firewall rules into one or more vendor-specific firewall rules for the target environment based on information derived from the

target environment, wherein the one or more vendor-specific firewall rules comprise commands to be directly used to configure a particular firewall device associated with a particular vendor.

2. (Cancelled)

3. (Currently Amended) The article of manufacture of claim 1, wherein obtaining at least one communication pattern further comprises ~~at least one of~~:

~~performing an analysis of one or more firewall configuration files associated with the source environment;~~

~~observing one or more run-time network flows at the source environment;~~

~~analyzing one or more configured dependencies at one or more servers running on the source environment;~~

~~analyzing one or more firewall log files; and~~

using manually provided information about one or more flows at the source environment.

4. (Original) The article of manufacture of claim 1, wherein information derived from the target environment used for automatically generating one or more vendor-neutral firewall rules comprises at least one of:

firewall topology;

security zone topology;

security zone contents; and

a new internet protocol (IP) address and subnet information.

5. (Currently Amended) The article of manufacture of claim 1, wherein obtaining at least one communication pattern further comprises obtaining information pertaining to service ports.

6. (Currently Amended) The article of manufacture of claim 1, wherein automatically generating one or more vendor-neutral rules comprises:

determining whether a communication pattern and/or one or more additional requirements from the target environment are relevant for the ~~one or more~~ multiple firewall interfaces in the target environment; and

automatically generating one or more vendor-neutral per-interface rules for one or more intended interfaces in the target environment based on the at least one communication pattern occurring in the source environment and/or one or more additional requirements from the target environment that are determined relevant for each interface.

7. (Currently Amended) The article of manufacture of claim 6, wherein automatically generating one or more vendor-neutral per-interface rules for ~~one or more~~ multiple intended interfaces in the target environment comprises generating at least one transformed communication pattern by applying a source environment-target environment IP address or subnet mapping to the at least one communication pattern occurring in the source environment.

8. (Currently Amended) The article of manufacture of claim 6, wherein automatically generating one or more vendor-neutral per-interface rules for ~~one or more~~ multiple intended interfaces in the target environment comprises incorporating new communication and/or new security requirements from the target environment.

9. (Currently Amended) The article of manufacture of claim 6, wherein automatically generating one or more vendor-neutral per-interface rules for ~~one or more~~ multiple intended interfaces in the target environment comprises incorporating information pertaining to zone contents and firewall interfaces of the target environment.

10. (Currently Amended) The article of manufacture of claim 6, wherein automatically generating one or more vendor-neutral per-interface rules for ~~one or more~~ multiple

intended interfaces in the target environment comprises applying heuristics and/or user-provided information to identify one or more service ports.

11. (Original) The article of manufacture of claim 1, wherein only a subset of devices in the source environment are transformed.

12. (Original) The article of manufacture of claim 1, wherein firewall and/or security zone topology in the target environment is partially or fully different from that of the source environment.

13. (Original) The article of manufacture of claim 1, wherein one or more devices in the target environment are from a different vendor and/or model and/or platform from one or more devices in the source environment.

14. (Original) The article of manufacture of claim 1, wherein one or more firewall devices are physical or virtual devices.

15. (Original) The article of manufacture of claim 1, wherein one or more security requirements in the source environment differ from those in the target environment.

16. (Original) The article of manufacture of claim 1, wherein one or more connectivity requirements in the source environment differ from those in the target environment.

17. (Original) The article of manufacture of claim 1, wherein information derived from the target environment comprises already-implemented vendor-specific firewall rules in the target environment.

18. (Currently Amended) The article of manufacture of claim 1, wherein automatically generating one or more vendor-neutral firewall rules for ~~one or more~~ multiple intended firewall interfaces in a target environment comprises accounting for one or more rules already implemented for the target environment's firewalls and recommending additions, deletions, and/or updates to the one or more rules.

19. (Original) The article of manufacture of claim 1, the method steps comprising automatically generating one or more vendor-specific firewall rules for a target environment during an enterprise information technology transformation activity, wherein an enterprise information technology transformation activity comprises at least one of migration, consolidation, virtualization, data center relocation, and cloudification of at least one application or server or service from a source information technology infrastructure to a target information technology infrastructure.

20. (Currently Amended) A system for automatically generating one or more rules during IT transformation for configuring one or more firewall interfaces in a post-transformation target environment, comprising:

at least one distinct software module, each distinct software module being embodied on a tangible computer-readable medium;

a memory; and

at least one processor coupled to the memory and operative for:

obtaining at least one communication pattern occurring in a pre-transformation source environment by analyzing (i) one or more firewall configuration files and/or firewall log files associated with the source environment, (ii) one or more run-time network flows at the source environment, and (iii) one or more configured dependencies at one or more servers running on the source environment; ~~and~~

automatically generating one or more vendor-neutral firewall rules for ~~one or more~~ multiple intended firewall interfaces, on a per-interface basis, in a post-transformation

target environment based on (i) the at least one communication pattern occurring in the source environment and ~~based on~~ (ii) information derived from the target environment, wherein the one or more vendor-neutral firewall rules contain multiple attributes and values associated therewith for configuring flow-control rules on a firewall device that is not specific to any particular vendor, and wherein said automatically generating comprises:

generating a transformed version of the at least one communication pattern by applying source-target host and internet protocol (IP) subnet mapping information to the at least one communication pattern;

generating an adjusted version of the at least one communication pattern by incorporating one or more communication requirements associated with the target environment to the transformed version of the at least one communication pattern; and

identifying a subset of the adjusted version of the at least one communication pattern to be utilized for each of the multiple intended firewall interface in the post-transformation target environment; and

automatically converting the one or more vendor-neutral firewall rules into one or more vendor-specific firewall rules for the target environment based on information derived from the target environment, wherein the one or more vendor-specific firewall rules comprise commands to be directly used to configure a particular firewall device associated with a particular vendor.

REMARKS

The present application was filed on September 14, 2012 with claims 1-20. Claims 1-20 are presently pending in the above-identified patent application. Claim 2 is proposed to be cancelled herein without prejudice. Claims 1, 3, 5-10, 18 and 20 are proposed to be amended herein. Applicant is not conceding that the subject matter encompassed by the claims prior to this Amendment is unpatentable over the art cited by the Examiner. Applicant respectfully reserves the right to pursue claims in one or more continuing applications, including claims capturing the subject matter encompassed by the claims prior to this Amendment and additional claims. Support for the amendments can be found, for example, on page 5, lines 20-24, and page 11, line 20 through page 13, line 1 of the specification. No new matter is being introduced.

In the Office Action, the Examiner **(i)** provisionally rejected claims 1-20 allegedly on the ground of non-statutory double patenting over claims 1-20 of co-pending Application No. 13/600,891; **(ii)** rejected claims 1-13 and 15-20 under 35 U.S.C. §102(b) as allegedly being anticipated by Bartal et al. (US 2006/0288409) (hereinafter "Bartal"); and **(iii)** rejected claim 14 under 35 U.S.C. §103(a) as allegedly being unpatentable over Bartal in view of Chang et al. (US 2013/0019277) (hereinafter "Chang").

The comments of the Examiner in forming the rejections are acknowledged and have been carefully considered.

Further, Applicants acknowledge with gratitude Examiner Mejia's courtesy in granting a telephonic interview, which was conducted with Applicants' undersigned representative on January 13, 2015, and wherein proposed draft amendments and the cited references were discussed.

DOUBLE PATENTING REJECTION

As noted above, the Examiner provisionally rejected claims 1-20 allegedly on the ground of non-statutory double patenting over claims 1-20 of co-pending Application No. 13/600,891. Applicants submit that the cited rejection is a provisional double patenting rejection and propose to defer resolution of the rejection until the allowable subject matter has been determined.

§102 REJECTION

Additionally, the Examiner rejected claims 1-13 and 15-20 under 35 U.S.C. §102(b) as allegedly being anticipated by Bartal. With respect to §102 rejections, MPEP §2131 notes that "[a] claim is anticipated only if each and every element as set forth in the claim is found, either expressly or inherently described, in a single prior art reference." *Verdegaal Bros. v. Union Oil Co. of California*, 814 F.2d 628, 631, 2 USPQ2d 1051, 1053 (Fed. Cir. 1987). As detailed below, Applicants respectfully submit that the cited reference does not disclose all of the claim elements.

For example, Applicants assert that the cited reference does not disclose the claimed aspect of "obtaining at least one communication pattern occurring in a pre-transformation source environment *by analyzing (i) one or more firewall configuration files and/or firewall log files associated with the source environment, (ii) one or more run-time network flows at the source environment, and (iii) one or more configured dependencies at one or more servers running on the source environment*," as explicitly taught in independent claims 1 and 20. Beginning on page 8, the Office Action alleges that Bartal discloses

> obtaining at least one communication pattern occurring in a pre-transformation source environment;" (par. 28-31, 35-40, 96-100; automatically generate firewall configuration files from security policy data based on functionality of devices/servers determine roles/capabilities for multiple gateways).

However, Applicants note that the cited portions of Bartal do not teach the specific limitation of obtaining communication patterns by "analyzing (i) one or more firewall configuration files and/or firewall log files associated with the source environment, (ii) one or

more run-time network flows at the source environment, ***and*** (iii) one or more configured dependencies at one or more servers running on the source environment."

By way of support for the amendments and to further highlight the noted distinctions, Applicants point, for example, to page 5, lines 20-24 of the specification, which teaches that

> [k]nowledge about communication patterns in the source environment may be obtained by performing analysis of firewall configuration files associated with the source environment, observing run-time network flow at the source environment, analyzing configured dependencies at one or more servers running on the source environment, analyzing firewall log files, or combinations thereof.

Accordingly, Applicants assert that the cited reference does not disclose this claim aspect as explicitly disclosed in independent claims 1 and 20, and for at least this reason, the §102 rejection should be withdrawn.

Additionally, Applicants assert that the cited reference does not disclose the claimed aspects, as explicitly taught in independent claims 1 and 20, of

> generating a transformed version of the at least one communication pattern by applying source-target host and internet protocol (IP) subnet mapping information to the at least one communication pattern;
>
> generating an adjusted version of the at least one communication pattern by incorporating one or more communication requirements associated with the target environment to the transformed version of the at least one communication pattern; [and]
>
> identifying a subset of the adjusted version of the at least one communication pattern to be utilized for each of the multiple intended firewall interface in the post-transformation target environment.

Page 9 of the Office Action alleges that Bartal discloses

> "automatically generating one or more vendor-neutral rules for one or more intended firewall interfaces in a post-transformation target environment based on the at least one communication pattern occurring in the source environment and based on information derived from the target environment." (par. 63-67; using Model Definition Language "MDL" data parser to generate entity relation model for policies that can be translated into firewall configuration files for generic network conditions and further providing for a topology adapter for more precise packet filtering at each of the gateway interfaces).

However, Applicants respectfully submit that the cited portions of Bartal do not teaches the specific limitation of automatically generating one or more vendor-neutral rules by "generating a transformed version of the at least one communication pattern," "generating an adjusted version of the at least one communication pattern," **and** "identifying a subset of the adjusted version of the at least one communication pattern to be utilized," as taught by amended independent claims 1 and 20.

By way of support for the amendments and to further highlight the noted distinctions, Applicants point, for example, to page 11, line 20 through page 13, line 1 of the specification, which teaches that

> [t]he transformation component 208 generates transformed communication patterns 212 based on the source-target host/IP subnet mapping information 104. If source-target host/IP subnet mapping information 104 is empty or not provided, the transformed communication patterns will be the same as the input provided to the transformation component 208. As explained herein, the source-target host/IP subnet mapping information 104 describes how an IP address that occurs in the communication pattern(s) changes as a result of the IT transformation activity. For example, the source-target mapping may specify that the IP address of the ssh server changes from 192.168.254.200 to 10.20.6.11 as a result of the IT transformation. The transformation component 210 applies such mapping information 104 to the cleaned (and possibly, de-duplicated) source communication patterns provided as input. The transformed communication patterns 212 will have the mapped IP addresses and subnets, where applicable.
>
> The transformed communication patterns 212 are forwarded to a re-calibrator component 214 (which receives input in the form of new communication requirements 130 in the target environment). The new communication requirements may be of two types:
>
> Communication patterns previously present in the source environment, but that should be avoided in the target environment. Suppose that communication to a web server from a certain client was allowed previously, but in the data center to which the web server is being migrated to, that client should not be allowed to connect to the web server.
>
> Communication patterns not were previously present in the source environment, but should be allowed in the target environment. Suppose that a new service (that was absent in the source environment) is going to be deployed at port 50505 at a server that is being migrated to the target environment. Consequently, this new communication pattern should be taken into account when generating elementary rules.

> Based on the new communication requirements, the re-calibrator component 214 generates adjusted and transformed communication patterns 216, which are provided to a classifier component 218 (which receives zone contents and firewall interfaces 106 from the target environment), which ultimately outputs per-interface elementary rules 116. The classifier component 218 considers each firewall interface that needs to be configured in the target environment, and identifies the subset of adjusted and transformed communication patterns 216 that are relevant for the interface. An adjusted and transformed communication pattern is relevant to an interface, if the pattern contains the source IP address, source subnet, destination IP address, or destination subnet that is part of the security zone guarded by the firewall interface.

Accordingly, Applicants assert that the cited reference does not disclose this claim aspect as explicitly disclosed in independent claims 1 and 20, and for at least this reason, the §102 rejection should be withdrawn.

§103 REJECTION

Also, the Examiner rejected claim 14 under 35 U.S.C. §103(a) as allegedly being unpatentable over Bartal in view of Chang. With regard to the §103 rejections, Applicants initially note that to establish *prima facie* obviousness of a claimed invention, all of the claim limitations must be taught or suggested by the prior art. *In re Royka*, 490 F.2d 981, 180 USPQ 580 (CCPA 1974). Further, if an independent claim is nonobvious under 35 U.S.C. 103, then any claim depending therefrom is nonobvious. *In re Fine*, 837 F.2d 1071, 5 USPQ2d 1596 (Fed. Cir. 1988). Therefore, because the cited references, as detailed above, do not teach or suggest the claimed limitations of independent claim 1, Applicants request withdrawal of the rejection of claim 14 under 35 U.S.C. §103(a).

Consequently, all of the pending claims are in condition for allowance and such favorable action is earnestly solicited.

If any outstanding issues remain, or if the Examiner has any further suggestions for expediting allowance of this application, the Examiner is invited to contact the undersigned at the telephone number indicated below.

Respectfully submitted,

/Michael J. Cooper/

Date: January 23, 2015

Michael J. Cooper
Attorney for Applicant(s)
Reg. No. 57,749
Ryan, Mason & Lewis, LLP
1175 Post Road East, Second Floor
Westport, CT 06880
(203) 255-6560

Electronic Acknowledgement Receipt

EFS ID:	21293251
Application Number:	13618298
International Application Number:	
Confirmation Number:	1015
Title of Invention:	Automatically Recommending Firewall Rules During Enterprise Information Technology Transformation
First Named Inventor/Applicant Name:	Nancy Burchfield
Customer Number:	48062
Filer:	Michael J. Cooper
Filer Authorized By:	
Attorney Docket Number:	YOR920120481US2
Receipt Date:	23-JAN-2015
Filing Date:	14-SEP-2012
Time Stamp:	14:51:06
Application Type:	Utility under 35 USC 111(a)

Payment information:

Submitted with Payment	no

File Listing:

Document Number	Document Description	File Name	File Size(Bytes)/ Message Digest	Multi Part /.zip	Pages (if appl.)
1		YOR920120481US2_Amendment_1-23-2015.pdf	509780 9ac9c8f92153c4be24bef903e38f34693f959050	yes	13

	Multipart Description/PDF files in .zip description		
	Document Description	**Start**	**End**
	Amendment/Req. Reconsideration-After Non-Final Reject	1	1
	Claims	2	7
	Applicant Arguments/Remarks Made in an Amendment	8	13

Warnings:	
Information:	
Total Files Size (in bytes):	509780

This Acknowledgement Receipt evidences receipt on the noted date by the USPTO of the indicated documents, characterized by the applicant, and including page counts, where applicable. It serves as evidence of receipt similar to a Post Card, as described in MPEP 503.

<u>New Applications Under 35 U.S.C. 111</u>
If a new application is being filed and the application includes the necessary components for a filing date (see 37 CFR 1.53(b)-(d) and MPEP 506), a Filing Receipt (37 CFR 1.54) will be issued in due course and the date shown on this Acknowledgement Receipt will establish the filing date of the application.

<u>National Stage of an International Application under 35 U.S.C. 371</u>
If a timely submission to enter the national stage of an international application is compliant with the conditions of 35 U.S.C. 371 and other applicable requirements a Form PCT/DO/EO/903 indicating acceptance of the application as a national stage submission under 35 U.S.C. 371 will be issued in addition to the Filing Receipt, in due course.

<u>New International Application Filed with the USPTO as a Receiving Office</u>
If a new international application is being filed and the international application includes the necessary components for an international filing date (see PCT Article 11 and MPEP 1810), a Notification of the International Application Number and of the International Filing Date (Form PCT/RO/105) will be issued in due course, subject to prescriptions concerning national security, and the date shown on this Acknowledgement Receipt will establish the international filing date of the application.

UNITED STATES PATENT AND TRADEMARK OFFICE

UNITED STATES DEPARTMENT OF COMMERCE
United States Patent and Trademark Office
Address: COMMISSIONER FOR PATENTS
P.O. Box 1450
Alexandria, Virginia 22313-1450
www.uspto.gov

APPLICATION NO.	FILING DATE	FIRST NAMED INVENTOR	ATTORNEY DOCKET NO.	CONFIRMATION NO.
13/618,298	09/14/2012	Nancy Burchfield	YOR920120481US2	1015

48062 7590 02/03/2015
RYAN, MASON & LEWIS, LLP
1175 Post Road East
2nd Floor
Westport, CT 06880

EXAMINER
MEJIA, FELICIANO S

ART UNIT	PAPER NUMBER
2492	

MAIL DATE	DELIVERY MODE
02/03/2015	PAPER

Please find below and/or attached an Office communication concerning this application or proceeding.

The time period for reply, if any, is set in the attached communication.

Applicant-Initiated Interview Summary	Application No.	Applicant(s)	
	13/618,298	BURCHFIELD ET AL.	
	Examiner	Art Unit	
	FELICIANO MEJIA	2492	

All participants (applicant, applicant's representative, PTO personnel):

(1) *FELICIANO MEJIA*.

(2) *Michael Cooper Reg. No. 57,749*.

(3) *Michael Chao, Primary Examiner*.

(4)_____.

Date of Interview: *13 January 2015*.

Type: ☒ Telephonic ☐ Video Conference
☐ Personal [copy given to: ☐ applicant ☐ applicant's representative]

Exhibit shown or demonstration conducted: ☐ Yes ☐ No.
If Yes, brief description: _____.

Issues Discussed ☐101 ☐112 ☐102 ☐103 ☒Others
(For each of the checked box(es) above, please describe below the issue and detailed description of the discussion)

Claim(s) discussed: *1 and 20*.

Identification of prior art discussed: *Bartal et al. (US Pub.2006/0288409) and Chang et al. (US Pub. 2013/0019277)*.

Substance of Interview
(For each issue discussed, provide a detailed description and indicate if agreement was reached. Some topics may include: identification or clarification of a reference or a portion thereof, claim interpretation, proposed amendments, arguments of any applied references etc...)

Applicant Representative and Examiner discussed the inventive concept as it pertained to the set of claims rejected in the office action dated 10/23/2014. The Applicant Representative proposed amending the claims to provide more detail to the claim limitations further narrowing the scope of the invention. The Applicant Representative and Examiner both agreed that further research would be required to address the proposed amendments once the proposed amendments are formally filed .

Applicant recordation instructions: The formal written reply to the last Office action must include the substance of the interview. (See MPEP section 713.04). If a reply to the last Office action has already been filed, applicant is given a non-extendable period of the longer of one month or thirty days from this interview date, or the mailing date of this interview summary form, whichever is later, to file a statement of the substance of the interview

Examiner recordation instructions: Examiners must summarize the substance of any interview of record. A complete and proper recordation of the substance of an interview should include the items listed in MPEP 713.04 for complete and proper recordation including the identification of the general thrust of each argument or issue discussed, a general indication of any other pertinent matters discussed regarding patentability and the general results or outcome of the interview, to include an indication as to whether or not agreement was reached on the issues raised.

☐ Attachment

/Michael Chao/ Primary Examiner, Art Unit 2492	/FELICIANO MEJIA/ Examiner, Art Unit 2492

Summary of Record of Interview Requirements

Manual of Patent Examining Procedure (MPEP), Section 713.04, Substance of Interview Must be Made of Record
A complete written statement as to the substance of any face-to-face, video conference, or telephone interview with regard to an application must be made of record in the application whether or not an agreement with the examiner was reached at the interview.

Title 37 Code of Federal Regulations (CFR) § 1.133 Interviews
Paragraph (b)

In every instance where reconsideration is requested in view of an interview with an examiner, a complete written statement of the reasons presented at the interview as warranting favorable action must be filed by the applicant. An interview does not remove the necessity for reply to Office action as specified in §§ 1.111, 1.135. (35 U.S.C. 132)

37 CFR §1.2 Business to be transacted in writing.
All business with the Patent or Trademark Office should be transacted in writing. The personal attendance of applicants or their attorneys or agents at the Patent and Trademark Office is unnecessary. The action of the Patent and Trademark Office will be based exclusively on the written record in the Office. No attention will be paid to any alleged oral promise, stipulation, or understanding in relation to which there is disagreement or doubt.

The action of the Patent and Trademark Office cannot be based exclusively on the written record in the Office if that record is itself incomplete through the failure to record the substance of interviews.

It is the responsibility of the applicant or the attorney or agent to make the substance of an interview of record in the application file, unless the examiner indicates he or she will do so. It is the examiner's responsibility to see that such a record is made and to correct material inaccuracies which bear directly on the question of patentability.

Examiners must complete an Interview Summary Form for each interview held where a matter of substance has been discussed during the interview by checking the appropriate boxes and filling in the blanks. Discussions regarding only procedural matters, directed solely to restriction requirements for which interview recordation is otherwise provided for in Section 812.01 of the Manual of Patent Examining Procedure, or pointing out typographical errors or unreadable script in Office actions or the like, are excluded from the interview recordation procedures below. Where the substance of an interview is completely recorded in an Examiners Amendment, no separate Interview Summary Record is required.

The Interview Summary Form shall be given an appropriate Paper No., placed in the right hand portion of the file, and listed on the "Contents" section of the file wrapper. In a personal interview, a duplicate of the Form is given to the applicant (or attorney or agent) at the conclusion of the interview. In the case of a telephone or video-conference interview, the copy is mailed to the applicant's correspondence address either with or prior to the next official communication. If additional correspondence from the examiner is not likely before an allowance or if other circumstances dictate, the Form should be mailed promptly after the interview rather than with the next official communication.

The Form provides for recordation of the following information:
- Application Number (Series Code and Serial Number)
- Name of applicant
- Name of examiner
- Date of interview
- Type of interview (telephonic, video-conference, or personal)
- Name of participant(s) (applicant, attorney or agent, examiner, other PTO personnel, etc.)
- An indication whether or not an exhibit was shown or a demonstration conducted
- An identification of the specific prior art discussed
- An indication whether an agreement was reached and if so, a description of the general nature of the agreement (may be by attachment of a copy of amendments or claims agreed as being allowable). Note: Agreement as to allowability is tentative and does not restrict further action by the examiner to the contrary.
- The signature of the examiner who conducted the interview (if Form is not an attachment to a signed Office action)

It is desirable that the examiner orally remind the applicant of his or her obligation to record the substance of the interview of each case. It should be noted, however, that the Interview Summary Form will not normally be considered a complete and proper recordation of the interview unless it includes, or is supplemented by the applicant or the examiner to include, all of the applicable items required below concerning the substance of the interview.

A complete and proper recordation of the substance of any interview should include at least the following applicable items:
1) A brief description of the nature of any exhibit shown or any demonstration conducted,
2) an identification of the claims discussed,
3) an identification of the specific prior art discussed,
4) an identification of the principal proposed amendments of a substantive nature discussed, unless these are already described on the Interview Summary Form completed by the Examiner,
5) a brief identification of the general thrust of the principal arguments presented to the examiner,
   (The identification of arguments need not be lengthy or elaborate. A verbatim or highly detailed description of the arguments is not required. The identification of the arguments is sufficient if the general nature or thrust of the principal arguments made to the examiner can be understood in the context of the application file. Of course, the applicant may desire to emphasize and fully describe those arguments which he or she feels were or might be persuasive to the examiner.)
6) a general indication of any other pertinent matters discussed, and
7) if appropriate, the general results or outcome of the interview unless already described in the Interview Summary Form completed by the examiner.

Examiners are expected to carefully review the applicant's record of the substance of an interview. If the record is not complete and accurate, the examiner will give the applicant an extendable one month time period to correct the record.

Examiner to Check for Accuracy

If the claims are allowable for other reasons of record, the examiner should send a letter setting forth the examiner's version of the statement attributed to him or her. If the record is complete and accurate, the examiner should place the indication, "Interview Record OK" on the paper recording the substance of the interview along with the date and the examiner's initials.

PTO/SB/06 (09-11)
Approved for use through 1/31/2014. OMB 0651-0032
U.S. Patent and Trademark Office; U.S. DEPARTMENT OF COMMERCE
Under the Paperwork Reduction Act of 1995, no persons are required to respond to a collection of information unless it displays a valid OMB control number.

PATENT APPLICATION FEE DETERMINATION RECORD

Substitute for Form PTO-875

Application or Docket Number	Filing Date	
13/618,298	09/14/2012	☐ To be Mailed

ENTITY: ☒ LARGE ☐ SMALL ☐ MICRO

APPLICATION AS FILED – PART I

FOR	(Column 1) NUMBER FILED	(Column 2) NUMBER EXTRA	RATE ($)	FEE ($)
☐ BASIC FEE (37 CFR 1.16(a), (b), or (c))	N/A	N/A	N/A	
☐ SEARCH FEE (37 CFR 1.16(k), (i), or (m))	N/A	N/A	N/A	
☐ EXAMINATION FEE (37 CFR 1.16(o), (p), or (q))	N/A	N/A	N/A	
TOTAL CLAIMS (37 CFR 1.16(i))	minus 20 =	*	x $ =	
INDEPENDENT CLAIMS (37 CFR 1.16(h))	minus 3 =	*	x $ =	
☐ APPLICATION SIZE FEE (37 CFR 1.16(s))	If the specification and drawings exceed 100 sheets of paper, the application size fee due is $310 ($155 for small entity) for each additional 50 sheets or fraction thereof. See 35 U.S.C. 41(a)(1)(G) and 37 CFR 1.16(s).			
☐ MULTIPLE DEPENDENT CLAIM PRESENT (37 CFR 1.16(j))				
* If the difference in column 1 is less than zero, enter "0" in column 2.			TOTAL	

APPLICATION AS AMENDED – PART II

AMENDMENT

01/23/2015	(Column 1) CLAIMS REMAINING AFTER AMENDMENT		(Column 2) HIGHEST NUMBER PREVIOUSLY PAID FOR	(Column 3) PRESENT EXTRA	RATE ($)	ADDITIONAL FEE ($)
Total (37 CFR 1.16(i))	* 20	Minus	** 20	= 0	x $80 =	0
Independent (37 CFR 1.16(h))	* 2	Minus	***3	= 0	x $420 =	0
☐ Application Size Fee (37 CFR 1.16(s))						
☐ FIRST PRESENTATION OF MULTIPLE DEPENDENT CLAIM (37 CFR 1.16(j))						
					TOTAL ADD'L FEE	0

AMENDMENT

	(Column 1) CLAIMS REMAINING AFTER AMENDMENT		(Column 2) HIGHEST NUMBER PREVIOUSLY PAID FOR	(Column 3) PRESENT EXTRA	RATE ($)	ADDITIONAL FEE ($)
Total (37 CFR 1.16(i))	*	Minus	**	=	x $ =	
Independent (37 CFR 1.16(h))	*	Minus	***	=	x $ =	
☐ Application Size Fee (37 CFR 1.16(s))						
☐ FIRST PRESENTATION OF MULTIPLE DEPENDENT CLAIM (37 CFR 1.16(j))						
					TOTAL ADD'L FEE	

* If the entry in column 1 is less than the entry in column 2, write "0" in column 3.
** If the "Highest Number Previously Paid For" IN THIS SPACE is less than 20, enter "20".
*** If the "Highest Number Previously Paid For" IN THIS SPACE is less than 3, enter "3".
The "Highest Number Previously Paid For" (Total or Independent) is the highest number found in the appropriate box in column 1.

LIE
/ANDREA FREEMAN/

This collection of information is required by 37 CFR 1.16. The information is required to obtain or retain a benefit by the public which is to file (and by the USPTO to process) an application. Confidentiality is governed by 35 U.S.C. 122 and 37 CFR 1.14. This collection is estimated to take 12 minutes to complete, including gathering, preparing, and submitting the completed application form to the USPTO. Time will vary depending upon the individual case. Any comments on the amount of time you require to complete this form and/or suggestions for reducing this burden, should be sent to the Chief Information Officer, U.S. Patent and Trademark Office, U.S. Department of Commerce, P.O. Box 1450, Alexandria, VA 22313-1450. DO NOT SEND FEES OR COMPLETED FORMS TO THIS ADDRESS. **SEND TO: Commissioner for Patents, P.O. Box 1450, Alexandria, VA 22313-1450.**
If you need assistance in completing the form, call 1-800-PTO-9199 and select option 2.

PTO/SB/08a (01-10)
Approved for use through 07/31/2012. OMB 0651-0031
U.S. Patent and Trademark Office; U.S. DEPARTMENT OF COMMERCE
Under the Paperwork Reduction Act of 1995, no persons are required to respond to a collection of information unless it contains a valid OMB control number.

INFORMATION DISCLOSURE STATEMENT BY APPLICANT

(Not for submission under 37 CFR 1.99)

Application Number	13618298
Filing Date	2012-09-14
First Named Inventor	Nancy Burchfield et al.
Art Unit	2492
Examiner Name	Feliciano S. Mejia
Attorney Docket Number	YOR920120481US2

U.S.PATENTS Remove

Examiner Initial*	Cite No	Patent Number	Kind Code[1]	Issue Date	Name of Patentee or Applicant of cited Document	Pages,Columns,Lines where Relevant Passages or Relevant Figures Appear
	1	6820266	B1	2004-11-16	Minakawa et al.	
	2	7213027	B1	2007-05-01	Kominek et al.	
	3	7392539	B2	2008-06-24	Brooks et al.	
	4	7472412	B2	2008-12-30	Wolf et al.	
	5	7539741	B2	2009-05-26	Liong et al.	
	6	7747416	B2	2010-06-29	Deininger et al.	
	7	7809817	B2	2010-10-05	Hillier, Andrew D.	
	8	7853687	B2	2010-12-14	Le Moigne et al.	

INFORMATION DISCLOSURE STATEMENT BY APPLICANT (Not for submission under 37 CFR 1.99)		
	Application Number	13618298
	Filing Date	2012-09-14
	First Named Inventor	Nancy Burchfield et al.
	Art Unit	2492
	Examiner Name	Feliciano S. Mejia
	Attorney Docket Number	YOR920120481US2

	9	7966659	B1	2011-06-21	Wilkinson et al	
	10	8060553	B2	2011-11-15	Mamou et al.	
	11	8272031	B2	2012-09-18	Abderrazzaq et al.	
	12	8291468	B1	2012-10-16	Chickering, Roger A.	
	13	8516241	B2	2013-08-20	Chang et al.	
	14	8607300	B2	2013-12-10	Wang, Haojin	
	15	8671222	B2	2014-03-11	Gass et al.	
	16	8706771	B2	2014-04-22	Gass et al.	

If you wish to add additional U.S. Patent citation information please click the Add button. Add

U.S.PATENT APPLICATION PUBLICATIONS Remove

Examiner Initial*	Cite No	Publication Number	Kind Code[1]	Publication Date	Name of Patentee or Applicant of cited Document	Pages,Columns,Lines where Relevant Passages or Relevant Figures Appear
	1	20020133579	A1	2002-09-19	Bernhardt et al.	

INFORMATION DISCLOSURE STATEMENT BY APPLICANT (Not for submission under 37 CFR 1.99)	Application Number	13618298
	Filing Date	2012-09-14
	First Named Inventor	Nancy Burchfield et al.
	Art Unit	2492
	Examiner Name	Feliciano S. Mejia
	Attorney Docket Number	YOR920120481US2

	2	20030037327	A1	2003-02-20	Cicciarelli et al.	
	3	20030133552	A1	2003-07-17	Pillai et al.	
	4	20030154071	A1	2003-08-14	Shreve, Gregory M.	
	5	20030236690	A1	2003-12-25	Johnston-Watt et al.	
	6	20040039942	A1	2004-02-26	Cooper et al.	
	7	20040199609	A1	2004-10-07	Papatla et al.	
	8	20050015471	A1	2005-01-20	Zhang et al.	
	9	20050091068	A1	2005-04-28	Ramamoorthy et al.	
	10	20050149721	A1	2005-07-07	Lu, Chih-Chung	
	11	20050160361	A1	2005-07-21	Young, Alan	
	12	20050216897	A1	2005-09-29	Amrhein et al.	

INFORMATION DISCLOSURE STATEMENT BY APPLICANT (Not for submission under 37 CFR 1.99)	Application Number	13618298
	Filing Date	2012-09-14
	First Named Inventor	Nancy Burchfield et al.
	Art Unit	2492
	Examiner Name	Feliciano S. Mejia
	Attorney Docket Number	YOR920120481US2

	13	20060047720	A1	2006-03-02	Kulkarni et al.	
	14	20060242690	A1	2006-10-26	Wolf et al.	
	15	20060288409	A1	2006-12-29	Bartal et al.	
	16	20070006122	A1	2007-01-04	Bailey et al.	
	17	20070136813	A1	2007-06-14	Wong, Hsing-Kuo	
	18	20070250615	A1	2007-10-25	Hillier, Andrew D.	
	19	20070250621	A1	2007-10-25	Hillier, Andrew D.	
	20	20070282982	A1	2007-12-06	Childress et al.	
	21	20080222290	A1	2008-09-11	Le Moigne et al.	
	22	20090158407	A1	2009-06-18	Nicodemus et al.	
	23	20090158302	A1	2009-06-18	Nicodemus et al.	

INFORMATION DISCLOSURE STATEMENT BY APPLICANT (Not for submission under 37 CFR 1.99)	Application Number	13618298
	Filing Date	2012-09-14
	First Named Inventor	Nancy Burchfield et al.
	Art Unit	2492
	Examiner Name	Feliciano S. Mejia
	Attorney Docket Number	YOR920120481US2

	24	20100064341	A1	2010-03-11	Aldera, Carlo	
	25	20100095348	A1	2010-04-15	Foster et al.	
	26	20100238945	A1	2010-09-23	McKernan et al.	
	27	20100332479	A1	2010-12-30	Prahlad et al.	
	28	20100332456	A1	2010-12-30	Prahlad et al.	
	29	20100332454	A1	2010-12-30	Prahlad et al.	
	30	20100332401	A1	2010-12-30	Prahlad et al.	
	31	20100333116	A1	2010-12-30	Prahlad et al.	
	32	20100332818	A1	2010-12-30	Prahlad et al.	
	33	20110078211	A1	2011-03-31	Gass et al.	
	34	20110072504	A1	2011-03-24	Abderrazzaq et al.	

INFORMATION DISCLOSURE STATEMENT BY APPLICANT (Not for submission under 37 CFR 1.99)	Application Number	13618298
	Filing Date	2012-09-14
	First Named Inventor	Nancy Burchfield et al.
	Art Unit	2492
	Examiner Name	Feliciano S. Mejia
	Attorney Docket Number	YOR920120481US2

	35	20110051715	A1	2011-03-03	Grunwald et al.	
	36	20110283269	A1	2011-11-17	Gass et al.	
	37	20110283270	A1	2011-11-17	Gass et al.	
	38	20110282995	A1	2011-11-17	Gass et al.	
	39	20110296391	A1	2011-12-01	Gass et al.	
	40	20110302647	A1	2011-12-08	Bhattacharya et al.	
	41	20120033681	A1	2012-02-09	Ridel et al.	
	42	20130019277	A1	2013-01-17	Chang et al.	
	43	20130191531	A1	2013-07-25	Kruglick, Ezekiel	
	44	20130276066	A1	2013-10-17	Buehl, Matthias	
	45	20130339882	A1	2013-12-19	Owen et al.	

INFORMATION DISCLOSURE STATEMENT BY APPLICANT (Not for submission under 37 CFR 1.99)		
	Application Number	13618298
	Filing Date	2012-09-14
	First Named Inventor	Nancy Burchfield et al.
	Art Unit	2492
	Examiner Name	Feliciano S. Mejia
	Attorney Docket Number	YOR920120481US2

	46					

If you wish to add additional U.S. Published Application citation information please click the Add button. Add

FOREIGN PATENT DOCUMENTS Remove

Examiner Initial*	Cite No	Foreign Document Number[3]	Country Code[2] ¡	Kind Code[4]	Publication Date	Name of Patentee or Applicant of cited Document	Pages,Columns,Lines where Relevant Passages or Relevant Figures Appear	T[5]
	1							☐

If you wish to add additional Foreign Patent Document citation information please click the Add button Add

NON-PATENT LITERATURE DOCUMENTS Remove

Examiner Initials*	Cite No	Include name of the author (in CAPITAL LETTERS), title of the article (when appropriate), title of the item (book, magazine, journal, serial, symposium, catalog, etc), date, pages(s), volume-issue number(s), publisher, city and/or country where published.	T[5]
	1		☐

If you wish to add additional non-patent literature document citation information please click the Add button Add

EXAMINER SIGNATURE

Examiner Signature		Date Considered	

*EXAMINER: Initial if reference considered, whether or not citation is in conformance with MPEP 609. Draw line through a citation if not in conformance and not considered. Include copy of this form with next communication to applicant.

[1] See Kind Codes of USPTO Patent Documents at www.USPTO.GOV or MPEP 901.04. [2] Enter office that issued the document, by the two-letter code (WIPO Standard ST.3). [3] For Japanese patent documents, the indication of the year of the reign of the Emperor must precede the serial number of the patent document. [4] Kind of document by the appropriate symbols as indicated on the document under WIPO Standard ST.16 if possible. [5] Applicant is to place a check mark here if English language translation is attached.

INFORMATION DISCLOSURE STATEMENT BY APPLICANT (Not for submission under 37 CFR 1.99)	Application Number	13618298
	Filing Date	2012-09-14
	First Named Inventor	Nancy Burchfield et al.
	Art Unit	2492
	Examiner Name	Feliciano S. Mejia
	Attorney Docket Number	YOR920120481US2

CERTIFICATION STATEMENT

Please see 37 CFR 1.97 and 1.98 to make the appropriate selection(s):

☐ That each item of information contained in the information disclosure statement was first cited in any communication from a foreign patent office in a counterpart foreign application not more than three months prior to the filing of the information disclosure statement. See 37 CFR 1.97(e)(1).

OR

☒ That no item of information contained in the information disclosure statement was cited in a communication from a foreign patent office in a counterpart foreign application, and, to the knowledge of the person signing the certification after making reasonable inquiry, no item of information contained in the information disclosure statement was known to any individual designated in 37 CFR 1.56(c) more than three months prior to the filing of the information disclosure statement. See 37 CFR 1.97(e)(2).

☐ See attached certification statement.

☐ The fee set forth in 37 CFR 1.17 (p) has been submitted herewith.

☐ A certification statement is not submitted herewith.

SIGNATURE

A signature of the applicant or representative is required in accordance with CFR 1.33, 10.18. Please see CFR 1.4(d) for the form of the signature.

Signature	/Michael J. Cooper/	Date (YYYY-MM-DD)	2015-02-26
Name/Print	Michael J. Cooper	Registration Number	57749

This collection of information is required by 37 CFR 1.97 and 1.98. The information is required to obtain or retain a benefit by the public which is to file (and by the USPTO to process) an application. Confidentiality is governed by 35 U.S.C. 122 and 37 CFR 1.14. This collection is estimated to take 1 hour to complete, including gathering, preparing and submitting the completed application form to the USPTO. Time will vary depending upon the individual case. Any comments on the amount of time you require to complete this form and/or suggestions for reducing this burden, should be sent to the Chief Information Officer, U.S. Patent and Trademark Office, U.S. Department of Commerce, P.O. Box 1450, Alexandria, VA 22313-1450. DO NOT SEND FEES OR COMPLETED FORMS TO THIS ADDRESS. **SEND TO: Commissioner for Patents, P.O. Box 1450, Alexandria, VA 22313-1450.**

Privacy Act Statement

The Privacy Act of 1974 (P.L. 93-579) requires that you be given certain information in connection with your submission of the attached form related to a patent application or patent. Accordingly, pursuant to the requirements of the Act, please be advised that: (1) the general authority for the collection of this information is 35 U.S.C. 2(b)(2); (2) furnishing of the information solicited is voluntary; and (3) the principal purpose for which the information is used by the U.S. Patent and Trademark Office is to process and/or examine your submission related to a patent application or patent. If you do not furnish the requested information, the U.S. Patent and Trademark Office may not be able to process and/or examine your submission, which may result in termination of proceedings or abandonment of the application or expiration of the patent.

The information provided by you in this form will be subject to the following routine uses:

1. The information on this form will be treated confidentially to the extent allowed under the Freedom of Information Act (5 U.S.C. 552) and the Privacy Act (5 U.S.C. 552a). Records from this system of records may be disclosed to the Department of Justice to determine whether the Freedom of Information Act requires disclosure of these record s.

2. A record from this system of records may be disclosed, as a routine use, in the course of presenting evidence to a court, magistrate, or administrative tribunal, including disclosures to opposing counsel in the course of settlement negotiations.

3. A record in this system of records may be disclosed, as a routine use, to a Member of Congress submitting a request involving an individual, to whom the record pertains, when the individual has requested assistance from the Member with respect to the subject matter of the record.

4. A record in this system of records may be disclosed, as a routine use, to a contractor of the Agency having need for the information in order to perform a contract. Recipients of information shall be required to comply with the requirements of the Privacy Act of 1974, as amended, pursuant to 5 U.S.C. 552a(m).

5. A record related to an International Application filed under the Patent Cooperation Treaty in this system of records may be disclosed, as a routine use, to the International Bureau of the World Intellectual Property Organization, pursuant to the Patent Cooperation Treaty.

6. A record in this system of records may be disclosed, as a routine use, to another federal agency for purposes of National Security review (35 U.S.C. 181) and for review pursuant to the Atomic Energy Act (42 U.S.C. 218(c)).

7. A record from this system of records may be disclosed, as a routine use, to the Administrator, General Services, or his/her designee, during an inspection of records conducted by GSA as part of that agency's responsibility to recommend improvements in records management practices and programs, under authority of 44 U.S.C. 2904 and 2906. Such disclosure shall be made in accordance with the GSA regulations governing inspection of records for this purpose, and any other relevant (i.e., GSA or Commerce) directive. Such disclosure shall not be used to make determinations about individuals.

8. A record from this system of records may be disclosed, as a routine use, to the public after either publication of the application pursuant to 35 U.S.C. 122(b) or issuance of a patent pursuant to 35 U.S.C. 151. Further, a record may be disclosed, subject to the limitations of 37 CFR 1.14, as a routine use, to the public if the record was filed in an application which became abandoned or in which the proceedings were terminated and which application is referenced by either a published application, an application open to public inspections or an issued patent.

9. A record from this system of records may be disclosed, as a routine use, to a Federal, State, or local law enforcement agency, if the USPTO becomes aware of a violation or potential violation of law or regulation.

Electronic Acknowledgement Receipt

EFS ID:	21608077
Application Number:	13618298
International Application Number:	
Confirmation Number:	1015
Title of Invention:	Automatically Recommending Firewall Rules During Enterprise Information Technology Transformation
First Named Inventor/Applicant Name:	Nancy Burchfield
Customer Number:	48062
Filer:	Michael J. Cooper
Filer Authorized By:	
Attorney Docket Number:	YOR920120481US2
Receipt Date:	26-FEB-2015
Filing Date:	14-SEP-2012
Time Stamp:	13:46:43
Application Type:	Utility under 35 USC 111(a)

Payment information:

Submitted with Payment	no

File Listing:

Document Number	Document Description	File Name	File Size(Bytes)/ Message Digest	Multi Part /.zip	Pages (if appl.)
1	Information Disclosure Statement (IDS) Form (SB08)	YOR920120481US1_IDS_02-26-2015.pdf	613992 4c86f7ecb41a3579f10fb5e26765ee1d9eb85ac7	no	9

Warnings:

Information:

A U.S. Publication Number Citation is required in the Information Disclosure Statement (IDS) form. You may remove the form to add the required data in order to correct the Informational Message or if you chose not to, the image of the form will be processed and be made available within the Image File Wrapper (IFW) system. However, no data will be extracted from this form. Any additional data such as Foreign Patent Documents or Non Patent Literature will be manually reviewed and keyed into USPTO systems.

Total Files Size (in bytes):	613992

This Acknowledgement Receipt evidences receipt on the noted date by the USPTO of the indicated documents, characterized by the applicant, and including page counts, where applicable. It serves as evidence of receipt similar to a Post Card, as described in MPEP 503.

New Applications Under 35 U.S.C. 111
If a new application is being filed and the application includes the necessary components for a filing date (see 37 CFR 1.53(b)-(d) and MPEP 506), a Filing Receipt (37 CFR 1.54) will be issued in due course and the date shown on this Acknowledgement Receipt will establish the filing date of the application.

National Stage of an International Application under 35 U.S.C. 371
If a timely submission to enter the national stage of an international application is compliant with the conditions of 35 U.S.C. 371 and other applicable requirements a Form PCT/DO/EO/903 indicating acceptance of the application as a national stage submission under 35 U.S.C. 371 will be issued in addition to the Filing Receipt, in due course.

New International Application Filed with the USPTO as a Receiving Office
If a new international application is being filed and the international application includes the necessary components for an international filing date (see PCT Article 11 and MPEP 1810), a Notification of the International Application Number and of the International Filing Date (Form PCT/RO/105) will be issued in due course, subject to prescriptions concerning national security, and the date shown on this Acknowledgement Receipt will establish the international filing date of the application.

Doc Code: DIST.E.FILE Document Description: Electronic Terminal Disclaimer - Filed	PTO/SB/25 U.S. Patent and Trademark Office Department of Commerce

Electronic Petition Request	**TERMINAL DISCLAIMER TO OBVIATE A PROVISIONAL DOUBLE PATENTING REJECTION OVER A PENDING "REFERENCE" APPLICATION**
Application Number	13618298
Filing Date	14-Sep-2012
First Named Inventor	Nancy Burchfield
Attorney Docket Number	YOR920120481US2
Title of Invention	Automatically Recommending Firewall Rules During Enterprise Information Technology Transformation

☒ Filing of terminal disclaimer does not obviate requirement for response under 37 CFR 1.111 to outstanding Office Action

☒ This electronic Terminal Disclaimer is not being used for a Joint Research Agreement.

Owner	Percent Interest
International Business Machines Corporation	100%

The owner(s) of percent interest listed above in the instant application hereby disclaims, except as provided below, the terminal part of the statutory term of any patent granted on the instant application which would extend beyond the expiration date of the full statutory term of any patent granted on pending reference Application Number(s)

13600891 filed on 08/31/2012

as the term of any patent granted on said reference application may be shortened by any terminal disclaimer filed prior to the grant of any patent on the pending reference application. The owner hereby agrees that any patent so granted on the instant application shall be enforceable only for and during such period that it and any patent granted on the reference application are commonly owned. This agreement runs with any patent granted on the instant application and is binding upon the grantee, its successors or assigns.

In making the above disclaimer, the owner does not disclaim the terminal part of any patent granted on the instant application that would extend to the expiration date of the full statutory term of any patent granted on said reference application, "as the term of any patent granted on said reference application may be shortened by any terminal disclaimer filed prior to the grant of any patent on the pending reference application," in the event that any such patent granted on the pending reference application: expires for failure to pay a maintenance fee, is held unenforceable, is found invalid by a court of competent jurisdiction, is statutorily disclaimed in whole or terminally disclaimed under 37 CFR 1.321, has all claims canceled by a reexamination certificate, is reissued, or is in any manner terminated prior to the expiration of its full statutory term as shortened by any terminal disclaimer filed prior to its grant.

◉ Terminal disclaimer fee under 37 CFR 1.20(d) is included with Electronic Terminal Disclaimer request.

○ I certify, in accordance with 37 CFR 1.4(d)(4), that the terminal disclaimer fee under 37 CFR 1.20(d) required for this terminal disclaimer has already been paid in the above-identified application.

Applicant claims the following fee status:

○ Small Entity

○ Micro Entity

◉ Regular Undiscounted

I hereby declare that all statements made herein of my own knowledge are true and that all statements made on information and belief are believed to be true; and further that these statements were made with the knowledge that willful false statements and the like so made are punishable by fine or imprisonment, or both, under Section 1001 of Title 18 of the United States Code and that such willful false statements may jeopardize the validity of the application or any patent issued thereon.

THIS PORTION MUST BE COMPLETED BY THE SIGNATORY OR SIGNATORIES

I certify, in accordance with 37 CFR 1.4(d)(4) that I am:

◉ An attorney or agent registered to practice before the Patent and Trademark Office who is of record in this application

Registration Number 57749

○ A sole inventor

○ A joint inventor; I certify that I am authorized to sign this submission on behalf of all of the inventors as evidenced by the power of attorney in the application

○ A joint inventor; all of whom are signing this request

Signature	/Michael J. Cooper/
Name	Michael J. Cooper

*Statement under 37 CFR 3.73(b) is required if terminal disclaimer is signed by the assignee (owner).
Form PTO/SB/96 may be used for making this certification. See MPEP § 324.

Electronic Patent Application Fee Transmittal

Application Number:	13618298
Filing Date:	14-Sep-2012
Title of Invention:	Automatically Recommending Firewall Rules During Enterprise Information Technology Transformation
First Named Inventor/Applicant Name:	Nancy Burchfield
Filer:	Michael J. Cooper
Attorney Docket Number:	YOR920120481US2

Filed as Large Entity

Filing Fees for Utility under 35 USC 111(a)

Description	Fee Code	Quantity	Amount	Sub-Total in USD($)
Basic Filing:				
Statutory or Terminal Disclaimer	1814	1	160	160
Pages:				
Claims:				
Miscellaneous-Filing:				
Petition:				
Patent-Appeals-and-Interference:				
Post-Allowance-and-Post-Issuance:				

Description	Fee Code	Quantity	Amount	Sub-Total in USD($)
Extension-of-Time:				
Miscellaneous:				
			Total in USD ($)	**160**

Doc Code: DISQ.E.FILE
Document Description: Electronic Terminal Disclaimer – Approved

Application No.: 13618298

Filing Date: 14-Sep-2012

Applicant/Patent under Reexamination: Burchfield et al.

Electronic Terminal Disclaimer filed on March 13, 2015

☒ APPROVED

This patent is subject to a terminal disclaimer

☐ DISAPPROVED

Approved/Disapproved by: Electronic Terminal Disclaimer automatically approved by EFS-Web

U.S. Patent and Trademark Office

Electronic Acknowledgement Receipt

EFS ID:	21765674
Application Number:	13618298
International Application Number:	
Confirmation Number:	1015
Title of Invention:	Automatically Recommending Firewall Rules During Enterprise Information Technology Transformation
First Named Inventor/Applicant Name:	Nancy Burchfield
Customer Number:	48062
Filer:	Michael J. Cooper
Filer Authorized By:	
Attorney Docket Number:	YOR920120481US2
Receipt Date:	13-MAR-2015
Filing Date:	14-SEP-2012
Time Stamp:	15:40:48
Application Type:	Utility under 35 USC 111(a)

Payment information:

Submitted with Payment	yes
Payment Type	Deposit Account
Payment was successfully received in RAM	$160
RAM confirmation Number	2193
Deposit Account	500510
Authorized User	
The Director of the USPTO is hereby authorized to charge indicated fees and credit any overpayment as follows:	

File Listing:

Document Number	Document Description	File Name	File Size(Bytes)/ Message Digest	Multi Part /.zip	Pages (if appl.)
1	Electronic Terminal Disclaimer-Filed	eTerminal-Disclaimer.pdf	33943 aca2f42f13989cd1a9b8f8b44ac3257d9beb93bc	no	2
Warnings:					
Information:					
2	Fee Worksheet (SB06)	fee-info.pdf	30503 0f0af935d7285edabc29b1383d2cb8ca9b7cb3ef	no	2
Warnings:					
Information:					
		Total Files Size (in bytes):	64446		

This Acknowledgement Receipt evidences receipt on the noted date by the USPTO of the indicated documents, characterized by the applicant, and including page counts, where applicable. It serves as evidence of receipt similar to a Post Card, as described in MPEP 503.

New Applications Under 35 U.S.C. 111
If a new application is being filed and the application includes the necessary components for a filing date (see 37 CFR 1.53(b)-(d) and MPEP 506), a Filing Receipt (37 CFR 1.54) will be issued in due course and the date shown on this Acknowledgement Receipt will establish the filing date of the application.

National Stage of an International Application under 35 U.S.C. 371
If a timely submission to enter the national stage of an international application is compliant with the conditions of 35 U.S.C. 371 and other applicable requirements a Form PCT/DO/EO/903 indicating acceptance of the application as a national stage submission under 35 U.S.C. 371 will be issued in addition to the Filing Receipt, in due course.

New International Application Filed with the USPTO as a Receiving Office
If a new international application is being filed and the international application includes the necessary components for an international filing date (see PCT Article 11 and MPEP 1810), a Notification of the International Application Number and of the International Filing Date (Form PCT/RO/105) will be issued in due course, subject to prescriptions concerning national security, and the date shown on this Acknowledgement Receipt will establish the international filing date of the application.

UNITED STATES PATENT AND TRADEMARK OFFICE

UNITED STATES DEPARTMENT OF COMMERCE
United States Patent and Trademark Office
Address: COMMISSIONER FOR PATENTS
P.O. Box 1450
Alexandria, Virginia 22313-1450
www.uspto.gov

NOTICE OF ALLOWANCE AND FEE(S) DUE

48062 7590 03/25/2015
RYAN, MASON & LEWIS, LLP
1175 Post Road East
2nd Floor
Westport, CT 06880

EXAMINER
MEJIA, FELICIANO S

ART UNIT	PAPER NUMBER
2492	

DATE MAILED: 03/25/2015

APPLICATION NO.	FILING DATE	FIRST NAMED INVENTOR	ATTORNEY DOCKET NO.	CONFIRMATION NO.
13/618,298	09/14/2012	Nancy Burchfield	YOR920120481US2	1015

TITLE OF INVENTION: Automatically Recommending Firewall Rules During Enterprise Information Technology Transformation

APPLN. TYPE	ENTITY STATUS	ISSUE FEE DUE	PUBLICATION FEE DUE	PREV. PAID ISSUE FEE	TOTAL FEE(S) DUE	DATE DUE
nonprovisional	UNDISCOUNTED	$960	$0	$0	$960	06/25/2015

THE APPLICATION IDENTIFIED ABOVE HAS BEEN EXAMINED AND IS ALLOWED FOR ISSUANCE AS A PATENT. PROSECUTION ON THE MERITS IS CLOSED. THIS NOTICE OF ALLOWANCE IS NOT A GRANT OF PATENT RIGHTS. THIS APPLICATION IS SUBJECT TO WITHDRAWAL FROM ISSUE AT THE INITIATIVE OF THE OFFICE OR UPON PETITION BY THE APPLICANT. SEE 37 CFR 1.313 AND MPEP 1308.

THE ISSUE FEE AND PUBLICATION FEE (IF REQUIRED) MUST BE PAID WITHIN THREE MONTHS FROM THE MAILING DATE OF THIS NOTICE OR THIS APPLICATION SHALL BE REGARDED AS ABANDONED. THIS STATUTORY PERIOD CANNOT BE EXTENDED. SEE 35 U.S.C. 151. THE ISSUE FEE DUE INDICATED ABOVE DOES NOT REFLECT A CREDIT FOR ANY PREVIOUSLY PAID ISSUE FEE IN THIS APPLICATION. IF AN ISSUE FEE HAS PREVIOUSLY BEEN PAID IN THIS APPLICATION (AS SHOWN ABOVE), THE RETURN OF PART B OF THIS FORM WILL BE CONSIDERED A REQUEST TO REAPPLY THE PREVIOUSLY PAID ISSUE FEE TOWARD THE ISSUE FEE NOW DUE.

HOW TO REPLY TO THIS NOTICE:

I. Review the ENTITY STATUS shown above. If the ENTITY STATUS is shown as SMALL or MICRO, verify whether entitlement to that entity status still applies.

If the ENTITY STATUS is the same as shown above, pay the TOTAL FEE(S) DUE shown above.

If the ENTITY STATUS is changed from that shown above, on PART B - FEE(S) TRANSMITTAL, complete section number 5 titled "Change in Entity Status (from status indicated above)".

For purposes of this notice, small entity fees are 1/2 the amount of undiscounted fees, and micro entity fees are 1/2 the amount of small entity fees.

II. PART B - FEE(S) TRANSMITTAL, or its equivalent, must be completed and returned to the United States Patent and Trademark Office (USPTO) with your ISSUE FEE and PUBLICATION FEE (if required). If you are charging the fee(s) to your deposit account, section "4b" of Part B - Fee(s) Transmittal should be completed and an extra copy of the form should be submitted. If an equivalent of Part B is filed, a request to reapply a previously paid issue fee must be clearly made, and delays in processing may occur due to the difficulty in recognizing the paper as an equivalent of Part B.

III. All communications regarding this application must give the application number. Please direct all communications prior to issuance to Mail Stop ISSUE FEE unless advised to the contrary.

IMPORTANT REMINDER: Utility patents issuing on applications filed on or after Dec. 12, 1980 may require payment of maintenance fees. It is patentee's responsibility to ensure timely payment of maintenance fees when due.

PART B - FEE(S) TRANSMITTAL

Complete and send this form, together with applicable fee(s), to: Mail **Mail Stop ISSUE FEE**
Commissioner for Patents
P.O. Box 1450
Alexandria, Virginia 22313-1450
or Fax (571)-273-2885

INSTRUCTIONS: This form should be used for transmitting the ISSUE FEE and PUBLICATION FEE (if required). Blocks 1 through 5 should be completed where appropriate. All further correspondence including the Patent, advance orders and notification of maintenance fees will be mailed to the current correspondence address as indicated unless corrected below or directed otherwise in Block 1, by (a) specifying a new correspondence address; and/or (b) indicating a separate "FEE ADDRESS" for maintenance fee notifications.

CURRENT CORRESPONDENCE ADDRESS (Note: Use Block 1 for any change of address)

48062 7590 03/25/2015
RYAN, MASON & LEWIS, LLP
1175 Post Road East
2nd Floor
Westport, CT 06880

Note: A certificate of mailing can only be used for domestic mailings of the Fee(s) Transmittal. This certificate cannot be used for any other accompanying papers. Each additional paper, such as an assignment or formal drawing, must have its own certificate of mailing or transmission.

Certificate of Mailing or Transmission
I hereby certify that this Fee(s) Transmittal is being deposited with the United States Postal Service with sufficient postage for first class mail in an envelope addressed to the Mail Stop ISSUE FEE address above, or being facsimile transmitted to the USPTO (571) 273-2885, on the date indicated below.

(Depositor's name)
(Signature)
(Date)

APPLICATION NO.	FILING DATE	FIRST NAMED INVENTOR	ATTORNEY DOCKET NO.	CONFIRMATION NO.
13/618,298	09/14/2012	Nancy Burchfield	YOR920120481US2	1015

TITLE OF INVENTION: Automatically Recommending Firewall Rules During Enterprise Information Technology Transformation

APPLN. TYPE	ENTITY STATUS	ISSUE FEE DUE	PUBLICATION FEE DUE	PREV. PAID ISSUE FEE	TOTAL FEE(S) DUE	DATE DUE
nonprovisional	UNDISCOUNTED	$960	$0	$0	$960	06/25/2015

EXAMINER	ART UNIT	CLASS-SUBCLASS
MEJIA, FELICIANO S	2492	726-001000

1. Change of correspondence address or indication of "Fee Address" (37 CFR 1.363).
❑ Change of correspondence address (or Change of Correspondence Address form PTO/SB/122) attached.
❑ "Fee Address" indication (or "Fee Address" Indication form PTO/SB/47; Rev 03-02 or more recent) attached. **Use of a Customer Number is required.**

2. For printing on the patent front page, list
(1) The names of up to 3 registered patent attorneys or agents OR, alternatively,
(2) The name of a single firm (having as a member a registered attorney or agent) and the names of up to 2 registered patent attorneys or agents. If no name is listed, no name will be printed.
1 _____
2 _____
3 _____

3. ASSIGNEE NAME AND RESIDENCE DATA TO BE PRINTED ON THE PATENT (print or type)

PLEASE NOTE: Unless an assignee is identified below, no assignee data will appear on the patent. If an assignee is identified below, the document has been filed for recordation as set forth in 37 CFR 3.11. Completion of this form is NOT a substitute for filing an assignment.

(A) NAME OF ASSIGNEE (B) RESIDENCE: (CITY and STATE OR COUNTRY)

Please check the appropriate assignee category or categories (will not be printed on the patent) : ❑ Individual ❑ Corporation or other private group entity ❑ Government

4a. The following fee(s) are submitted:
❑ Issue Fee
❑ Publication Fee (No small entity discount permitted)
❑ Advance Order - # of Copies _____

4b. Payment of Fee(s): (**Please first reapply any previously paid issue fee shown above**)
❑ A check is enclosed.
❑ Payment by credit card. Form PTO-2038 is attached.
❑ The director is hereby authorized to charge the required fee(s), any deficiency, or credits any overpayment, to Deposit Account Number _____ (enclose an extra copy of this form).

5. **Change in Entity Status** (from status indicated above)
❑ Applicant certifying micro entity status. See 37 CFR 1.29 — NOTE: Absent a valid certification of Micro Entity Status (see forms PTO/SB/15A and 15B), issue fee payment in the micro entity amount will not be accepted at the risk of application abandonment.
❑ Applicant asserting small entity status. See 37 CFR 1.27 — NOTE: If the application was previously under micro entity status, checking this box will be taken to be a notification of loss of entitlement to micro entity status.
❑ Applicant changing to regular undiscounted fee status. — NOTE: Checking this box will be taken to be a notification of loss of entitlement to small or micro entity status, as applicable.

NOTE: This form must be signed in accordance with 37 CFR 1.31 and 1.33. See 37 CFR 1.4 for signature requirements and certifications.

Authorized Signature _____ Date _____

Typed or printed name _____ Registration No. _____

UNITED STATES PATENT AND TRADEMARK OFFICE

UNITED STATES DEPARTMENT OF COMMERCE
United States Patent and Trademark Office
Address: COMMISSIONER FOR PATENTS
P.O. Box 1450
Alexandria, Virginia 22313-1450
www.uspto.gov

APPLICATION NO.	FILING DATE	FIRST NAMED INVENTOR	ATTORNEY DOCKET NO.	CONFIRMATION NO.
13/618,298	09/14/2012	Nancy Burchfield	YOR920120481US2	1015

48062 7590 03/25/2015
RYAN, MASON & LEWIS, LLP
1175 Post Road East
2nd Floor
Westport, CT 06880

EXAMINER
MEJIA, FELICIANO S

ART UNIT	PAPER NUMBER
2492	

DATE MAILED: 03/25/2015

Determination of Patent Term Adjustment under 35 U.S.C. 154 (b)
(Applications filed on or after May 29, 2000)

The Office has discontinued providing a Patent Term Adjustment (PTA) calculation with the Notice of Allowance.

Section 1(h)(2) of the AIA Technical Corrections Act amended 35 U.S.C. 154(b)(3)(B)(i) to eliminate the requirement that the Office provide a patent term adjustment determination with the notice of allowance. See Revisions to Patent Term Adjustment, 78 Fed. Reg. 19416, 19417 (Apr. 1, 2013). Therefore, the Office is no longer providing an initial patent term adjustment determination with the notice of allowance. The Office will continue to provide a patent term adjustment determination with the Issue Notification Letter that is mailed to applicant approximately three weeks prior to the issue date of the patent, and will include the patent term adjustment on the patent. Any request for reconsideration of the patent term adjustment determination (or reinstatement of patent term adjustment) should follow the process outlined in 37 CFR 1.705.

Any questions regarding the Patent Term Extension or Adjustment determination should be directed to the Office of Patent Legal Administration at (571)-272-7702. Questions relating to issue and publication fee payments should be directed to the Customer Service Center of the Office of Patent Publication at 1-(888)-786-0101 or (571)-272-4200.

OMB Clearance and PRA Burden Statement for PTOL-85 Part B

The Paperwork Reduction Act (PRA) of 1995 requires Federal agencies to obtain Office of Management and Budget approval before requesting most types of information from the public. When OMB approves an agency request to collect information from the public, OMB (i) provides a valid OMB Control Number and expiration date for the agency to display on the instrument that will be used to collect the information and (ii) requires the agency to inform the public about the OMB Control Number's legal significance in accordance with 5 CFR 1320.5(b).

The information collected by PTOL-85 Part B is required by 37 CFR 1.311. The information is required to obtain or retain a benefit by the public which is to file (and by the USPTO to process) an application. Confidentiality is governed by 35 U.S.C. 122 and 37 CFR 1.14. This collection is estimated to take 12 minutes to complete, including gathering, preparing, and submitting the completed application form to the USPTO. Time will vary depending upon the individual case. Any comments on the amount of time you require to complete this form and/or suggestions for reducing this burden, should be sent to the Chief Information Officer, U.S. Patent and Trademark Office, U.S. Department of Commerce, P.O. Box 1450, Alexandria, Virginia 22313-1450. DO NOT SEND FEES OR COMPLETED FORMS TO THIS ADDRESS. SEND TO: Commissioner for Patents, P.O. Box 1450, Alexandria, Virginia 22313-1450. Under the Paperwork Reduction Act of 1995, no persons are required to respond to a collection of information unless it displays a valid OMB control number.

Privacy Act Statement

The Privacy Act of 1974 (P.L. 93-579) requires that you be given certain information in connection with your submission of the attached form related to a patent application or patent. Accordingly, pursuant to the requirements of the Act, please be advised that: (1) the general authority for the collection of this information is 35 U.S.C. 2(b)(2); (2) furnishing of the information solicited is voluntary; and (3) the principal purpose for which the information is used by the U.S. Patent and Trademark Office is to process and/or examine your submission related to a patent application or patent. If you do not furnish the requested information, the U.S. Patent and Trademark Office may not be able to process and/or examine your submission, which may result in termination of proceedings or abandonment of the application or expiration of the patent.

The information provided by you in this form will be subject to the following routine uses:

1. The information on this form will be treated confidentially to the extent allowed under the Freedom of Information Act (5 U.S.C. 552) and the Privacy Act (5 U.S.C 552a). Records from this system of records may be disclosed to the Department of Justice to determine whether disclosure of these records is required by the Freedom of Information Act.
2. A record from this system of records may be disclosed, as a routine use, in the course of presenting evidence to a court, magistrate, or administrative tribunal, including disclosures to opposing counsel in the course of settlement negotiations.
3. A record in this system of records may be disclosed, as a routine use, to a Member of Congress submitting a request involving an individual, to whom the record pertains, when the individual has requested assistance from the Member with respect to the subject matter of the record.
4. A record in this system of records may be disclosed, as a routine use, to a contractor of the Agency having need for the information in order to perform a contract. Recipients of information shall be required to comply with the requirements of the Privacy Act of 1974, as amended, pursuant to 5 U.S.C. 552a(m).
5. A record related to an International Application filed under the Patent Cooperation Treaty in this system of records may be disclosed, as a routine use, to the International Bureau of the World Intellectual Property Organization, pursuant to the Patent Cooperation Treaty.
6. A record in this system of records may be disclosed, as a routine use, to another federal agency for purposes of National Security review (35 U.S.C. 181) and for review pursuant to the Atomic Energy Act (42 U.S.C. 218(c)).
7. A record from this system of records may be disclosed, as a routine use, to the Administrator, General Services, or his/her designee, during an inspection of records conducted by GSA as part of that agency's responsibility to recommend improvements in records management practices and programs, under authority of 44 U.S.C. 2904 and 2906. Such disclosure shall be made in accordance with the GSA regulations governing inspection of records for this purpose, and any other relevant (i.e., GSA or Commerce) directive. Such disclosure shall not be used to make determinations about individuals.
8. A record from this system of records may be disclosed, as a routine use, to the public after either publication of the application pursuant to 35 U.S.C. 122(b) or issuance of a patent pursuant to 35 U.S.C. 151. Further, a record may be disclosed, subject to the limitations of 37 CFR 1.14, as a routine use, to the public if the record was filed in an application which became abandoned or in which the proceedings were terminated and which application is referenced by either a published application, an application open to public inspection or an issued patent.
9. A record from this system of records may be disclosed, as a routine use, to a Federal, State, or local law enforcement agency, if the USPTO becomes aware of a violation or potential violation of law or regulation.

Examiner-Initiated Interview Summary	Application No.	Applicant(s)	
	13/618,298	BURCHFIELD ET AL.	
	Examiner	Art Unit	
	FELICIANO MEJIA	2492	

All participants (applicant, applicant's representative, PTO personnel):

(1) *FELICIANO MEJIA*. (3)_____.

(2) *Michael Cooper*. (4)_____.

Date of Interview: *12 March 2015*.

Type: ☒ Telephonic ☐ Video Conference
☐ Personal [copy given to: ☐ applicant ☐ applicant's representative]

Exhibit shown or demonstration conducted: ☐ Yes ☒ No.
If Yes, brief description: _____.

Issues Discussed ☒101 ☐112 ☐102 ☐103 ☐Others
(For each of the checked box(es) above, please describe below the issue and detailed description of the discussion)

Claim(s) discussed: *Claim 1*.

Identification of prior art discussed: _____.

Substance of Interview
(For each issue discussed, provide a detailed description and indicate if agreement was reached. Some topics may include: identification or clarification of a reference or a portion thereof, claim interpretation, proposed amendments, arguments of any applied references etc...)

The Examiner with approval from primary Michael Chao discussed the amended claims and suggested an Examiner's Amendment to clear up potential double patent and 101 issues associated with Claim 1. Applicant agreed to further amend claim 1 to provide patent eligible subject matter by amending claim 1 to read, "Non-transitory computer readable…" and file a terminal disclaimer for application 13/600298 .

Applicant recordation instructions: It is not necessary for applicant to provide a separate record of the substance of interview.

Examiner recordation instructions: Examiners must summarize the substance of any interview of record. A complete and proper recordation of the substance of an interview should include the items listed in MPEP 713.04 for complete and proper recordation including the identification of the general thrust of each argument or issue discussed, a general indication of any other pertinent matters discussed regarding patentability and the general results or outcome of the interview, to include an indication as to whether or not agreement was reached on the issues raised.

☐ Attachment

/FELICIANO MEJIA/ Examiner, Art Unit 2492	

Notice of Allowability	Application No. 13/618,298	Applicant(s) BURCHFIELD ET AL.	
	Examiner FELICIANO MEJIA	Art Unit 2492	AIA (First Inventor to File) Status No

-- The MAILING DATE of this communication appears on the cover sheet with the correspondence address--

All claims being allowable, PROSECUTION ON THE MERITS IS (OR REMAINS) CLOSED in this application. If not included herewith (or previously mailed), a Notice of Allowance (PTOL-85) or other appropriate communication will be mailed in due course. **THIS NOTICE OF ALLOWABILITY IS NOT A GRANT OF PATENT RIGHTS.** This application is subject to withdrawal from issue at the initiative of the Office or upon petition by the applicant. See 37 CFR 1.313 and MPEP 1308.

1. ☒ This communication is responsive to *Applicant Remarks 01/23/2015*.
   ☐ A declaration(s)/affidavit(s) under **37 CFR 1.130(b)** was/were filed on_____.
2. ☐ An election was made by the applicant in response to a restriction requirement set forth during the interview on _____; the restriction requirement and election have been incorporated into this action.
3. ☒ The allowed claim(s) is/are *1 and 3 - 20*. As a result of the allowed claim(s), you may be eligible to benefit from the **Patent Prosecution Highway** program at a participating intellectual property office for the corresponding application. For more information, please see http://www.uspto.gov/patents/init_events/pph/index.jsp or send an inquiry to PPHfeedback@uspto.gov .
4. ☐ Acknowledgment is made of a claim for foreign priority under 35 U.S.C. § 119(a)-(d) or (f).

   Certified copies:

   a) ☐ All b) ☐ Some *c) ☐ None of the:
   1. ☐ Certified copies of the priority documents have been received.
   2. ☐ Certified copies of the priority documents have been received in Application No. _____ .
   3. ☐ Copies of the certified copies of the priority documents have been received in this national stage application from the International Bureau (PCT Rule 17.2(a)).

   * Certified copies not received: _____.

Applicant has THREE MONTHS FROM THE "MAILING DATE" of this communication to file a reply complying with the requirements noted below. Failure to timely comply will result in ABANDONMENT of this application.
THIS THREE-MONTH PERIOD IS NOT EXTENDABLE.

5. ☐ CORRECTED DRAWINGS (as "replacement sheets") must be submitted.
   ☐ including changes required by the attached Examiner's Amendment / Comment or in the Office action of Paper No./Mail Date _____.

   Identifying indicia such as the application number (see 37 CFR 1.84(c)) should be written on the drawings in the front (not the back) of each sheet. Replacement sheet(s) should be labeled as such in the header according to 37 CFR 1.121(d).
6. ☐ DEPOSIT OF and/or INFORMATION about the deposit of BIOLOGICAL MATERIAL must be submitted. Note the attached Examiner's comment regarding REQUIREMENT FOR THE DEPOSIT OF BIOLOGICAL MATERIAL.

Attachment(s)

1. ☐ Notice of References Cited (PTO-892)
2. ☒ Information Disclosure Statements (PTO/SB/08), Paper No./Mail Date See Continuation Sheet
3. ☐ Examiner's Comment Regarding Requirement for Deposit of Biological Material
4. ☒ Interview Summary (PTO-413), Paper No./Mail Date *herewith* .
5. ☒ Examiner's Amendment/Comment
6. ☒ Examiner's Statement of Reasons for Allowance
7. ☐ Other _____.

/Michael Chao/ Primary Examiner, Art Unit 2492	/FELICIANO MEJIA/ Examiner, Art Unit 2492

Continuation of Attachment(s) 2. Information Disclosure Statements (PTO/SB/08), Paper No./Mail Date: 11/25/2014 and 02/26/2015.

DETAILED ACTION

1. The present application is being examined under the pre-AIA first to invent provisions.

This action is responsive to the application filed 12/05/2013 and directed towards methods computer readable storage with computer processing instructions and system to provide for:

"Automatically Recommending Firewall Rules During Enterprise Information Technology Transformation."

Claims 1 – 20 have been presented.

Claim 2 has been cancelled.

Claims 1 and 3 - 20 are pending.

Information Disclosure Statement

2. The information disclosure statements (IDS) submitted on 11/25/2014 and 02/26/2015 are in compliance with the provisions of 37 CFR 1.97. Accordingly, the information disclosure statement is being considered by the examiner.

Terminal Disclaimer

3. The terminal disclaimer filed on 03/13/2015 disclaiming the terminal portion of any patent granted on this application which would extend beyond the expiration date of 02/12/2035 has been reviewed and is accepted. The terminal disclaimer has been recorded.

EXAMINER'S AMENDMENT

4. An examiner's amendment to the record appears below. Should the changes and/or additions be unacceptable to applicant, an amendment may be filed as provided by 37 CFR 1.312. To ensure consideration of such an amendment, it MUST be submitted no later than the payment of the issue fee.

Authorization for this examiner's amendment was given in a telephone interview with Michael Cooper Reg. No. 57,749 on 03/12/2015.

IN THE CLAIMS

1. (Currently Amended) An article of manufacture comprising a <u>non-transitory</u> computer readable storage medium having computer readable instructions tangibly embodied thereon which, when implemented, cause a computer to carry out a plurality of method steps comprising:

obtaining at least one communication pattern occurring in a pre-transformation source environment by analyzing (i) one or more firewall configuration files and/or firewall log files associated with the source environment, (ii) one or more run-time network flows at the source environment, and (iii) one or more configured dependencies at one or more servers running on the source environment;

automatically generating one or more vendor-neutral firewall rules for multiple intended firewall interfaces, on a per-interface basis, in a post-transformation target environment based on (i) the at least one communication pattern occurring in the source environment and (ii) information derived from the target environment, wherein the one or more vendor-neutral firewall rules contain multiple attributes and values associated therewith for configuring flow-control rules on a firewall device that is not specific to any particular vendor, and wherein said automatically generating comprises:

generating a transformed version of the at least one communication pattern by applying source-target host and internet protocol (IP) subnet mapping information to the at least one communication pattern;

generating an adjusted version of the at least one communication pattern by incorporating one or more communication requirements associated with the target environment to the transformed version of the at least one communication pattern; and

identifying a subset of the adjusted version of the at least one communication pattern to be utilized for each of the multiple intended firewall interface in the post-transformation target environment; and

automatically converting the one or more vendor-neutral firewall rules into one or more vendor-specific firewall rules for the target environment based on information derived from the target environment, wherein the one or more vendor-specific firewall rules comprise commands to be directly used to configure a particular firewall device associated with a particular vendor.

Allowable Subject Matter

5. Claims 1 and 3 – 20 **(renumbered as claims 2 - 19)** are allowed. The following is an examiner's statement of reasons for allowance.

Claim 1 is directed towards "Automatically Recommending Firewall Rules During Enterprise Information Technology Transformation." In particular, the invention provides for the includes automatic generation of rules for configuring the firewalls in a target environment, on a per-interface basis, using (potentially incomplete or partial) discovery data about a source environment and/or details about communication required in the

target environment and/or details about security controls required in the target environment.

The closest prior art, Bartal et al. (US Pub. 20206/0288409) teaches a method and apparatus for managing a firewall that facilitates the generation of a security policy for a particular network environment, and automatically generates the firewall-specific configuration files from the security policy simultaneously for multiple gateways.

Claim 1 is allowed because the prior art of record does not teach, or define neither singly nor in combination the claimed limitations.

Claims 3 - 19 (renumbered as claims 2 - 18) are also allowed because they depend on independent claim 1.

Claim 20 (renumbered as claim 19) represents a system that performs the method steps of claim 1. Claim 20 (now claim 19) is allowed for the same reasons cited in the claim 1 reasons for allowance.

Conclusion

6. Any inquiry concerning this communication or earlier communications from the examiner should be directed to FELICIANO MEJIA whose telephone number is (571)270-5994. The examiner can normally be reached on Monday thru Friday 7:30am to 5:00pm EST.

If attempts to reach the examiner by telephone are unsuccessful, the examiner's supervisor, Saleh Najjar can be reached on (571) 272-4006. The fax phone number for the organization where this application or proceeding is assigned is 571-273-8300.

Information regarding the status of an application may be obtained from the Patent Application Information Retrieval (PAIR) system. Status information for published applications may be obtained from either Private PAIR or Public PAIR. Status information for unpublished applications is available through Private PAIR only. For more information about the PAIR system, see http://pair-direct.uspto.gov. Should you have questions on access to the Private PAIR system, contact the Electronic Business Center (EBC) at 866-217-9197 (toll-free). If you would like assistance from a USPTO Customer Service Representative or access to the automated information system, call 800-786-9199 (IN USA OR CANADA) or 571-272-1000.

/F. M./ 03/12/2015
Examiner, Art Unit 2492

/Michael Chao/
Primary Examiner, Art Unit 2492

Examiner-Initiated Interview Summary	Application No.	Applicant(s)	
	13/618,298	BURCHFIELD ET AL.	
	Examiner	Art Unit	
	FELICIANO MEJIA	2492	

All participants (applicant, applicant's representative, PTO personnel):

(1) *FELICIANO MEJIA*. (3)_____.

(2) *Michael Cooper*. (4)_____.

Date of Interview: *12 March 2015*.

Type: ☒ Telephonic ☐ Video Conference
☐ Personal [copy given to: ☐ applicant ☐ applicant's representative]

Exhibit shown or demonstration conducted: ☐ Yes ☒ No.
If Yes, brief description: _____.

Issues Discussed ☒101 ☐112 ☐102 ☐103 ☐Others
(For each of the checked box(es) above, please describe below the issue and detailed description of the discussion)

Claim(s) discussed: *Claim 1*.

Identification of prior art discussed: _____.

Substance of Interview
(For each issue discussed, provide a detailed description and indicate if agreement was reached. Some topics may include: identification or clarification of a reference or a portion thereof, claim interpretation, proposed amendments, arguments of any applied references etc...)

The Examiner with approval from primary Michael Chao discussed the amended claims and suggested an Examiner's Amendment to clear up potential double patent and 101 issues associated with Claim 1. Applicant agreed to further amend claim 1 to provide patent eligible subject matter by amending claim 1 to read, "Non-transitory computer readable…" and file a terminal disclaimer for application 13/600298 .

Applicant recordation instructions: It is not necessary for applicant to provide a separate record of the substance of interview.

Examiner recordation instructions: Examiners must summarize the substance of any interview of record. A complete and proper recordation of the substance of an interview should include the items listed in MPEP 713.04 for complete and proper recordation including the identification of the general thrust of each argument or issue discussed, a general indication of any other pertinent matters discussed regarding patentability and the general results or outcome of the interview, to include an indication as to whether or not agreement was reached on the issues raised.

☐ Attachment

/FELICIANO MEJIA/ Examiner, Art Unit 2492	

PTO/SB/08a (01-10)
Approved for use through 07/31/2012. OMB 0651-0031
U.S. Patent and Trademark Office; U.S. DEPARTMENT OF COMMERCE
Under the Paperwork Reduction Act of 1995, no persons are required to respond to a collection of information unless it contains a valid OMB control number.

INFORMATION DISCLOSURE STATEMENT BY APPLICANT

(Not for submission under 37 CFR 1.99)

Application Number	13618298
Filing Date	2012-09-14
First Named Inventor	Nancy Burchfield et al.
Art Unit	2492
Examiner Name	Feliciano S. Mejia
Attorney Docket Number	YOR920120481US2

U.S.PATENTS Remove

Examiner Initial*	Cite No	Patent Number	Kind Code[1]	Issue Date	Name of Patentee or Applicant of cited Document	Pages,Columns,Lines where Relevant Passages or Relevant Figures Appear
	1	6820266	B1	2004-11-16	Minakawa et al.	
	2	7213027	B1	2007-05-01	Kominek et al.	
	3	7392539	B2	2008-06-24	Brooks et al.	
	4	7472412	B2	2008-12-30	Wolf et al.	
	5	7539741	B2	2009-05-26	Liong et al.	
	6	7747416	B2	2010-06-29	Deininger et al.	
	7	7809817	B2	2010-10-05	Hillier, Andrew D.	
	8	7853687	B2	2010-12-14	Le Moigne et al.	

ALL REFERENCES CONSIDERED EXCEPT WHERE LINED THROUGH. /F.M./

Receipt date: 11/25/2014	Application Number	13618298	13618298 - GAU: 2492
INFORMATION DISCLOSURE STATEMENT BY APPLICANT (**Not for submission under 37 CFR 1.99)**	Filing Date	2012-09-14	
	First Named Inventor	Nancy Burchfield et al.	
	Art Unit	2492	
	Examiner Name	Feliciano S. Mejia	
	Attorney Docket Number	YOR920120481US2	

	9	7966659	B1	2011-06-21	Wilkinson et al.	
	10	8060553	B2	2011-11-15	Mamou et al.	
	11	8272031	B2	2012-09-18	Abderrazzaq et al.	
	12	8291468	B1	2012-10-16	Chickering, Roger A.	
	13	8516241	B2	2013-08-20	Chang et al.	
	14	8607300	B2	2013-12-10	Wang, Haojin	
	15	8671222	B2	2014-03-11	Gass et al.	
	16	8706771	B2	2014-04-22	Gass et al.	

If you wish to add additional U.S. Patent citation information please click the Add button. Add

U.S.PATENT APPLICATION PUBLICATIONS Remove

Examiner Initial*	Cite No	Publication Number	Kind Code[1]	Publication Date	Name of Patentee or Applicant of cited Document	Pages,Columns,Lines where Relevant Passages or Relevant Figures Appear
	1	20020133579	A1	2002-09-19	Bernhardt et al.	

Receipt date: 11/25/2014	Application Number	13618298	13618298 - GAU: 2492
INFORMATION DISCLOSURE STATEMENT BY APPLICANT (**Not for submission under 37 CFR 1.99)**	Filing Date	2012-09-14	
	First Named Inventor	Nancy Burchfield et al.	
	Art Unit	2492	
	Examiner Name	Feliciano S. Mejia	
	Attorney Docket Number	YOR920120481US2	

	2	20030037327	A1	2003-02-20	Cicciarelli et al.	
	3	20030133552	A1	2003-07-17	Pillai et al.	
	4	20030154071	A1	2003-08-14	Shreve, Gregory M.	
	5	20030236690	A1	2003-12-25	Johnston-Watt et al.	
	6	20040039942	A1	2004-02-26	Cooper et al.	
	7	20040199609	A1	2004-10-07	Papatla et al.	
	8	20050015471	A1	2005-01-20	Zhang et al.	
	9	20050091068	A1	2005-04-28	Ramamoorthy et al.	
	10	20050149721	A1	2005-07-07	Lu, Chih-Chung	
	11	20050216897	A1	2005-09-29	Amrhein et al.	
	12	20060047720	A1	2006-03-02	Kulkami et al.	

ALL REFERENCES CONSIDERED EXCEPT WHERE LINED THROUGH. /F.M./

	13	20060242690	A1	2006-10-26	Wolf et al.	
	14	20060288409	A1	2006-12-21	Bartal et al.	
	15	20070006122	A1	2007-01-04	Bailey et al.	
	16	20070136813	A1	2007-06-14	Wong, Hsing-Kuo	
	17	20070250621	A1	2007-10-25	Hillier, Andrew D.	
	18	20070250615	A1	2007-10-25	Hillier, Andrew D.	
	19	20070282982	A1	2007-12-06	Childress et al.	
	20	20080222290	A1	2008-09-11	Le Moigne et al.	
	21	20090158302	A1	2009-06-18	Nicodemus et al.	
	22	20090158407	A1	2009-06-18	Nicodemus et al.	
	23	20100064341	A1	2010-03-11	Aldera, Carlo	

	24	20100095348	A1	2010-04-15	Foster et al.	
	25	20100238945	A1	2010-09-23	McKernan et al.	
	26	20100332818	A1	2010-12-30	Prahlad et al.	
	27	20100332479	A1	2010-12-30	Prahlad et al.	
	28	20100332456	A1	2010-12-30	Prahlad et al.	
	29	20100332454	A1	2010-12-30	Prahlad et al.	
	30	20100332401	A1	2010-12-30	Prahlad et al.	
	31	20100333116	A1	2010-12-30	Prahlad et al.	
	32	20110051715	A1	2011-03-05	Grunwald et al.	
	33	20110078211	A1	2011-03-31	Gass et al.	
	34	20110072504	A1	2011-03-24	Abderrazzaq et al.	

	35	20110282995	A1	2011-11-17	Gass et al.	
	36	20110283269	A1	2011-11-17	Gass et al.	
	37	20110283270	A1	2011-11-17	Gass et al.	
	38	20110302647	A1	2011-12-08	Bhattacharya et al.	
	39	20110296391	A1	2011-12-01	Gass et al.	
	40	20120033681	A1	2012-02-09	Ridel et al.	
	41	20130019277	A1	2013-01-17	Chang et al.	
	42	20130191531	A1	2013-07-25	Kruglick, Ezekiel	
	43	20130276066	A1	2013-10-17	Buehl, Matthias	
	44	20130339882	A1	2013-12-19	Owen et al.	

If you wish to add additional U.S. Published Application citation information please click the Add button. Add

FOREIGN PATENT DOCUMENTS Remove

Receipt date: 11/25/2014	Application Number	13618298 13618298 - GAU: 2492
INFORMATION DISCLOSURE STATEMENT BY APPLICANT (**Not for submission under 37 CFR 1.99)**	Filing Date	2012-09-14
	First Named Inventor	Nancy Burchfield et al.
	Art Unit	2492
	Examiner Name	Feliciano S. Mejia
	Attorney Docket Number	YOR920120481US2

Examiner Initial*	Cite No	Foreign Document Number[3]	Country Code[2] ¡	Kind Code[4]	Publication Date	Name of Patentee or Applicant of cited Document	Pages,Columns,Lines where Relevant Passages or Relevant Figures Appear	T[5]
	1							☐

If you wish to add additional Foreign Patent Document citation information please click the Add button Add

NON-PATENT LITERATURE DOCUMENTS Remove

Examiner Initials*	Cite No	Include name of the author (in CAPITAL LETTERS), title of the article (when appropriate), title of the item (book, magazine, journal, serial, symposium, catalog, etc), date, pages(s), volume-issue number(s), publisher, city and/or country where published.	T[5]
	1		☐

If you wish to add additional non-patent literature document citation information please click the Add button Add

EXAMINER SIGNATURE

Examiner Signature	/Feliciano Mejia/	Date Considered	03/11/2015

*EXAMINER: Initial if reference considered, whether or not citation is in conformance with MPEP 609. Draw line through a citation if not in conformance and not considered. Include copy of this form with next communication to applicant.

[1] See Kind Codes of USPTO Patent Documents at www.USPTO.GOV or MPEP 901.04. [2] Enter office that issued the document, by the two-letter code (WIPO Standard ST.3). [3] For Japanese patent documents, the indication of the year of the reign of the Emperor must precede the serial number of the patent document. [4] Kind of document by the appropriate symbols as indicated on the document under WIPO Standard ST.16 if possible. [5] Applicant is to place a check mark here if English language translation is attached.

ALL REFERENCES CONSIDERED EXCEPT WHERE LINED THROUGH. /F.M./

Receipt date: 11/25/2014	Application Number	13618298 13618298 - GAU: 2492
INFORMATION DISCLOSURE STATEMENT BY APPLICANT (**Not for submission under 37 CFR 1.99)**	Filing Date	2012-09-14
	First Named Inventor	Nancy Burchfield et al.
	Art Unit	2492
	Examiner Name	Feliciano S. Mejia
	Attorney Docket Number	YOR920120481US2

CERTIFICATION STATEMENT

Please see 37 CFR 1.97 and 1.98 to make the appropriate selection(s):

☐ That each item of information contained in the information disclosure statement was first cited in any communication from a foreign patent office in a counterpart foreign application not more than three months prior to the filing of the information disclosure statement. See 37 CFR 1.97(e)(1).

OR

☒ That no item of information contained in the information disclosure statement was cited in a communication from a foreign patent office in a counterpart foreign application, and, to the knowledge of the person signing the certification after making reasonable inquiry, no item of information contained in the information disclosure statement was known to any individual designated in 37 CFR 1.56(c) more than three months prior to the filing of the information disclosure statement. See 37 CFR 1.97(e)(2).

☐ See attached certification statement.

☐ The fee set forth in 37 CFR 1.17 (p) has been submitted herewith.

☐ A certification statement is not submitted herewith.

SIGNATURE

A signature of the applicant or representative is required in accordance with CFR 1.33, 10.18. Please see CFR 1.4(d) for the form of the signature.

Signature	/Michael J. Cooper/	Date (YYYY-MM-DD)	2014-11-25
Name/Print	Michael J. Cooper	Registration Number	57749

This collection of information is required by 37 CFR 1.97 and 1.98. The information is required to obtain or retain a benefit by the public which is to file (and by the USPTO to process) an application. Confidentiality is governed by 35 U.S.C. 122 and 37 CFR 1.14. This collection is estimated to take 1 hour to complete, including gathering, preparing and submitting the completed application form to the USPTO. Time will vary depending upon the individual case. Any comments on the amount of time you require to complete this form and/or suggestions for reducing this burden, should be sent to the Chief Information Officer, U.S. Patent and Trademark Office, U.S. Department of Commerce, P.O. Box 1450, Alexandria, VA 22313-1450. DO NOT SEND FEES OR COMPLETED FORMS TO THIS ADDRESS. **SEND TO: Commissioner for Patents, P.O. Box 1450, Alexandria, VA 22313-1450.**

ALL REFERENCES CONSIDERED EXCEPT WHERE LINED THROUGH. /F.M./

Privacy Act Statement

The Privacy Act of 1974 (P.L. 93-579) requires that you be given certain information in connection with your submission of the attached form related to a patent application or patent. Accordingly, pursuant to the requirements of the Act, please be advised that: (1) the general authority for the collection of this information is 35 U.S.C. 2(b)(2); (2) furnishing of the information solicited is voluntary; and (3) the principal purpose for which the information is used by the U.S. Patent and Trademark Office is to process and/or examine your submission related to a patent application or patent. If you do not furnish the requested information, the U.S. Patent and Trademark Office may not be able to process and/or examine your submission, which may result in termination of proceedings or abandonment of the application or expiration of the patent.

The information provided by you in this form will be subject to the following routine uses:

1. The information on this form will be treated confidentially to the extent allowed under the Freedom of Information Act (5 U.S.C. 552) and the Privacy Act (5 U.S.C. 552a). Records from this system of records may be disclosed to the Department of Justice to determine whether the Freedom of Information Act requires disclosure of these record s.

2. A record from this system of records may be disclosed, as a routine use, in the course of presenting evidence to a court, magistrate, or administrative tribunal, including disclosures to opposing counsel in the course of settlement negotiations.

3. A record in this system of records may be disclosed, as a routine use, to a Member of Congress submitting a request involving an individual, to whom the record pertains, when the individual has requested assistance from the Member with respect to the subject matter of the record.

4. A record in this system of records may be disclosed, as a routine use, to a contractor of the Agency having need for the information in order to perform a contract. Recipients of information shall be required to comply with the requirements of the Privacy Act of 1974, as amended, pursuant to 5 U.S.C. 552a(m).

5. A record related to an International Application filed under the Patent Cooperation Treaty in this system of records may be disclosed, as a routine use, to the International Bureau of the World Intellectual Property Organization, pursuant to the Patent Cooperation Treaty.

6. A record in this system of records may be disclosed, as a routine use, to another federal agency for purposes of National Security review (35 U.S.C. 181) and for review pursuant to the Atomic Energy Act (42 U.S.C. 218(c)).

7. A record from this system of records may be disclosed, as a routine use, to the Administrator, General Services, or his/her designee, during an inspection of records conducted by GSA as part of that agency's responsibility to recommend improvements in records management practices and programs, under authority of 44 U.S.C. 2904 and 2906. Such disclosure shall be made in accordance with the GSA regulations governing inspection of records for this purpose, and any other relevant (i.e., GSA or Commerce) directive. Such disclosure shall not be used to make determinations about individuals.

8. A record from this system of records may be disclosed, as a routine use, to the public after either publication of the application pursuant to 35 U.S.C. 122(b) or issuance of a patent pursuant to 35 U.S.C. 151. Further, a record may be disclosed, subject to the limitations of 37 CFR 1.14, as a routine use, to the public if the record was filed in an application which became abandoned or in which the proceedings were terminated and which application is referenced by either a published application, an application open to public inspections or an issued patent.

9. A record from this system of records may be disclosed, as a routine use, to a Federal, State, or local law enforcement agency, if the USPTO becomes aware of a violation or potential violation of law or regulation.

ALL REFERENCES CONSIDERED EXCEPT WHERE LINED THROUGH. /F.M./

Search Notes	Application/Control No.	Applicant(s)/Patent Under Reexamination
	13618298	BURCHFIELD ET AL.
	Examiner	**Art Unit**
	FELICIANO MEJIA	2492

CPC- SEARCHED

Symbol	Date	Examiner
H04L 41/22, 63/0263, 63/029, 63/0218, 63/0227, 63/20	10/15/2014	F.M.
G06F 21/6254	03/16/2015	F.M.
H04L 63/20, 63/0263, 63/02 and 63/08	03/16/2015	

CPC COMBINATION SETS - SEARCHED

Symbol	Date	Examiner

US CLASSIFICATION SEARCHED

Class	Subclass	Date	Examiner
709	220	10/15/2014	F.M.
726	1 and 11	10/15/2014	F.M.
709	225 and 246	03/16/2015	F.M.
726	11, 14 and 22	03/16/2015	F.M.

SEARCH NOTES

Search Notes	Date	Examiner
East Inventor Search	10/15/2014	F.M.
CPC and USPC Class / Sub Class Search	10/15/2014	F.M.
IDS Reference Search	10/15/2014	F.M.
See Attached Search History	10/20/2014	F.M.
Interference East Inventor Dbl Pat. Search	03/16/2015	F.M.
Consult w/Primary Michael Chao	03/12/2015	F.M.
Interference Claim Search	03/16/2015	F.M.
Interference CPC/USPC Class Subclass Search	03/16/2015	F.M.

INTERFERENCE SEARCH

US Class/ CPC Symbol	US Subclass / CPC Group	Date	Examiner

INTERFERENCE SEARCH			
US Class/ CPC Symbol	**US Subclass / CPC Group**	**Date**	**Examiner**
G06F	21/6254	03/16/2015	F.M.
H04L	63/20, 63/0263, 63/02 and 63/08	03/16/2015	F.M.

Issue Classification	Application/Control No.	Applicant(s)/Patent Under Reexamination
	13618298	BURCHFIELD ET AL.
	Examiner	**Art Unit**
	FELICIANO MEJIA	2492

CPC						
Symbol					**Type**	**Version**
H04L		63	/	02	F	2013-01-01
H04L		63	/	20	I	2013-01-01
H04L		63	/	08	I	2013-01-01
H04L		63	/	0263	I	2013-01-01
			/			
			/			
			/			
			/			
			/			
			/			
			/			
			/			
			/			
			/			
			/			

CPC Combination Sets								
Symbol					**Type**	**Set**	**Ranking**	**Version**
			/					
			/					

/FELICIANO MEJIA/ Examiner.Art Unit 2492 (Assistant Examiner)	03/16/2015 (Date)	**Total Claims Allowed:** 19	
/MICHAEL CHAO/ Primary Examiner.Art Unit 2492 (Primary Examiner)	03/20/2015 (Date)	O.G. Print Claim(s) 1	O.G. Print Figure 1

Issue Classification	Application/Control No.	Applicant(s)/Patent Under Reexamination
	13618298	BURCHFIELD ET AL.
	Examiner	**Art Unit**
	FELICIANO MEJIA	2492

US ORIGINAL CLASSIFICATION	
CLASS	SUBCLASS
726	11

CROSS REFERENCE(S)					
CLASS	SUBCLASS (ONE SUBCLASS PER BLOCK)				
726	14	22			
709	225	246			

INTERNATIONAL CLASSIFICATION									
CLAIMED					NON-CLAIMED				
G	0	6	F	15 / 173 (2006.0)					
G	0	6	F	9 / 00 (2006.0)					
G	0	6	F	15 / 16 (2006.0)					
G	0	6	F	17 / 00 (2006.0)					

/FELICIANO MEJIA/ Examiner.Art Unit 2492 (Assistant Examiner)	03/16/2015 (Date)	**Total Claims Allowed:** 19	
/MICHAEL CHAO/ Primary Examiner.Art Unit 2492 (Primary Examiner)	03/20/2015 (Date)	O.G. Print Claim(s) 1	O.G. Print Figure 1

Issue Classification	Application/Control No.	Applicant(s)/Patent Under Reexamination
	13618298	BURCHFIELD ET AL.
	Examiner	**Art Unit**
	FELICIANO MEJIA	2492

☐ Claims renumbered in the same order as presented by applicant ☐ CPA ☒ T.D. ☐ R.1.47

Final	Original	Final	Original	Final	Original	Final	Original	Final	Original	Final	Original	Final	Original	Final	Original
1	1	16	17												
	2	17	18												
2	3	18	19												
3	4	19	20												
4	5														
5	6														
6	7														
7	8														
8	9														
9	10														
10	11														
11	12														
12	13														
13	14														
14	15														
15	16														

/FELICIANO MEJIA/ Examiner.Art Unit 2492 (Assistant Examiner)	03/16/2015 (Date)	**Total Claims Allowed:** 19	
/MICHAEL CHAO/ Primary Examiner.Art Unit 2492 (Primary Examiner)	03/20/2015 (Date)	O.G. Print Claim(s) 1	O.G. Print Figure 1

EAST Search History

EAST Search History (Prior Art)

Ref #	Hits	Search Query	DBs	Default Operator	Plurals	Time Stamp
S1	9	((Nancy) near2 (Burchfield)).INV.	US-PGPUB; USPAT	OR	ON	2014/10/15 15:12
S2	4	((Nathaniel) near2 (Hang)).INV.	US-PGPUB; USPAT	OR	ON	2014/10/15 15:13
S3	47	((Rafah) near2 (Hosn)).INV.	US-PGPUB; USPAT	OR	ON	2014/10/15 15:14
S4	480	((James) near2 (Murray)).INV.	US-PGPUB; USPAT	OR	ON	2014/10/15 15:14
S5	26	((Harigovind) near2 (Ramasamy)).INV.	US-PGPUB; USPAT	OR	ON	2014/10/15 15:14
S6	540	S1 S2 S3 S4 S5	US-PGPUB; USPAT; USOCR; EPO; JPO; DERWENT	OR	ON	2014/10/15 15:15
S8	2060	((automat$6 dynamic$4 system$5) WITH ((config$7 modif$7 chang$3 upgrad$3 migrat$3) NEAR3 (fire$1wall filter)) WITH (rule protocol condition))	US-PGPUB; USPAT; USOCR; EPO; JPO; DERWENT	OR	ON	2014/10/15 15:25
S9	25127	(((ip (internet ADJ protocol)) NEAR3 (address (port socket)) WITH (setting parameter)))	US-PGPUB; USPAT; USOCR; EPO; JPO; DERWENT	OR	ON	2014/10/15 15:29
S10	171	S8 AND S9	US-PGPUB;	OR	ON	2014/10/15 15:29

			USPAT; USOCR; EPO; JPO; DERWENT			
S11	29	S10 AND ((H04L41/22 OR H04L63/0263 OR H04L63/029 OR H04L63/0218 OR H04L63/0227 OR H04L41/0893 OR H04L63/20 OR H04L63/0236 OR H04L67/34 OR H04L41/082 OR H04L41/0883).CPC. AND (726/11 OR 709/224 OR 709/220).CCLS.)	US-PGPUB; USPAT; USOCR; EPO; JPO; DERWENT	OR	ON	2014/10/15 15:43
S12	3	S6 AND ((H04L41/22 OR H04L63/0263 OR H04L63/029 OR H04L63/0218 OR H04L63/0227 OR H04L41/0893 OR H04L63/20 OR H04L63/0236 OR H04L67/34 OR H04L41/082 OR H04L41/0883).CPC. AND (726/11 OR 709/224 OR 709/220).CCLS.)	US-PGPUB; USPAT; USOCR; EPO; JPO; DERWENT	OR	ON	2014/10/15 15:43
S13	2	"20140068701".pn.	US-PGPUB; USPAT; USOCR; EPO; JPO; DERWENT	OR	ON	2014/10/15 16:00
S16	0	S10 AND S13	US-PGPUB; USPAT; USOCR; EPO; JPO; DERWENT	OR	ON	2014/10/15 16:02
S17	2	S8 AND S13	US-PGPUB; USPAT; USOCR; EPO; JPO; DERWENT	OR	ON	2014/10/15 16:02
S18	4	S11 AND (((gener$3 neutral) NEAR3 (fire$1wall filter)) WITH (polic$3 rule))	US-PGPUB; USPAT; USOCR; EPO; JPO; DERWENT	OR	ON	2014/10/15 16:30
S20	33	S8 AND (((general generic neutral) NEAR3 (fire$1wall filter)) WITH (polic$3 rule))	US-PGPUB; USPAT; USOCR; EPO; JPO; DERWENT	OR	ON	2014/10/15 16:42
S22	3	((automat$6 dynamic$4 system$5) SAME (((vendor$1specific)	US-	OR	ON	2014/10/15

		NEAR3 (fire$1wall filter)) WITH (polic$3 rule)))	PGPUB; USPAT; USOCR; EPO; JPO; DERWENT			16:59
S23	80	("20020133579" | "20030037327" | "20030236690" | "20040039942" | "20040199609" | "20050015471" | "20050216897" | "20060047720" | "20070006122" | "20070250615" | "20070250621" | "20070282982" | "20100064341" | "20100095348" | "20100238945" | "20100332401" | "20100332454" | "20100332456" | "20100332479" | "20100332818" | "20100333116" | "20110072504" | "20110078211" | "20110282995" | "20110283269" | "20110283270" | "20110296391" | "20110302647" | "20130019277" | "20130191531" | "20130276066" | "20130339882" | "7392539" | "7809817" | "7966659" | "8060553" | "8272031" | "8516241" | "8671222" | "8706771").PN.	US-PGPUB; USPAT; USOCR; EPO; JPO; DERWENT	OR	ON	2014/10/16 11:47
S24	9	((Nancy) near2 (Burchfield)).INV.	US-PGPUB; USPAT	OR	ON	2014/10/16 11:48
S25	4	((Nathaniel) near2 (Hang)).INV.	US-PGPUB; USPAT	OR	ON	2014/10/16 11:48
S26	47	((Rafah) near2 (Hosn)).INV.	US-PGPUB; USPAT	OR	ON	2014/10/16 11:48
S27	480	((James) near2 (Murray)).INV.	US-PGPUB; USPAT	OR	ON	2014/10/16 11:48
S28	26	((Harigovind) near2 (Ramasamy)).INV.	US-PGPUB; USPAT	OR	ON	2014/10/16 11:48
S29	540	S24 S25 S26 S27 S28	US-PGPUB; USPAT; USOCR; EPO; JPO; DERWENT	OR	ON	2014/10/16 11:48
S30	1	S23 AND S29	US-PGPUB; USPAT; USOCR; EPO; JPO; DERWENT	OR	ON	2014/10/16 11:48
S31	2060	((automat$6 dynamic$4 system$5) WITH ((config$7 modif$7 chang$3 upgrad$3 migrat$3) NEAR3 (fire$1wall filter)) WITH (rule	US-PGPUB;	OR	ON	2014/10/16 11:50

		protocol condition))	USPAT; USOCR; EPO; JPO; DERWENT			
S32	2	S23 AND S31	US-PGPUB; USPAT; USOCR; EPO; JPO; DERWENT	OR	ON	2014/10/16 11:50
S33	2	"20060288409".pn.	US-PGPUB; USPAT; USOCR; EPO; JPO; DERWENT	OR	ON	2014/10/16 11:55
S34	2	"20130019277".pn.	US-PGPUB; USPAT; USOCR; EPO; JPO; DERWENT	OR	ON	2014/10/20 10:15
S35	0	"200130019277".pn.	US-PGPUB; USPAT; USOCR; EPO; JPO; DERWENT	OR	ON	2014/10/20 10:52
S36	2	"20130019277".pn.	US-PGPUB; USPAT; USOCR; EPO; JPO; DERWENT	OR	ON	2014/10/20 10:54
S37	0	"13600891".app.	US-PGPUB; USPAT; USOCR; EPO; JPO; DERWENT	OR	ON	2015/03/05 20:29
S38	1	"13/600891".app.	US-PGPUB; USPAT; USOCR; EPO; JPO; DERWENT	OR	ON	2015/03/05 20:29
S39	1	"13/618298".app.	US-	OR	ON	2015/03/05

			PGPUB; USPAT; USOCR; EPO; JPO; DERWENT			20:33
S40	1	13/600891.app.	US-PGPUB; USPAT	OR	ON	2015/03/11 14:40
S41	1	"20140068698".pn.	US-PGPUB; USPAT	OR	ON	2015/03/11 14:41
S42	105	((automat$6 dynamic$4 system$5) SAME (((general generic neutral (vendor$1neutral)) NEAR3 (fire$1wall filter)) WITH (polic$3 rule)))	US-PGPUB; USPAT; USOCR; EPO; JPO; DERWENT	OR	ON	2015/03/11 15:58
S43	2149	((automat$6 dynamic$4 system$5) WITH ((config$7 modif$7 chang$3 upgrad$3 migrat$3) NEAR3 (fire$1wall filter)) WITH (rule protocol condition))	US-PGPUB; USPAT; USOCR; EPO; JPO; DERWENT	OR	ON	2015/03/11 16:11
S44	112	S43 AND ((G06F21/6254 OR H04L63/20 OR H04L63/0263 OR H04L63/0227 OR H04L63/029).CPC. AND (726/11 OR 709/217 OR 705/4 OR 705/51).CCLS.)	US-PGPUB; USPAT; USOCR; EPO; JPO; DERWENT	OR	ON	2015/03/11 16:11

EAST Search History (Interference)

Ref #	Hits	Search Query	DBs	Default Operator	Plurals	Time Stamp
S45	9	Burchfield-Nancy$.IN.	US-PGPUB; USPAT	OR	ON	2015/03/16 10:52
S46	4	Hang-Nathaniel$.IN.	US-PGPUB; USPAT	OR	ON	2015/03/16 10:52
S47	49	Hosn-Rafah$.IN.	US-PGPUB; USPAT	OR	ON	2015/03/16 10:53
S48	358	Murray-James$.IN.	US-PGPUB; USPAT	OR	ON	2015/03/16 10:53

S49	27	Ramasamy-Harigovind$.IN.	US-PGPUB; USPAT	OR	ON	2015/03/16 10:54
S50	420	S45 S46 S47 S48 S49	US-PGPUB; USPAT	OR	ON	2015/03/16 10:54
S51	658	((automat$6 dynamic$4 system$5) WITH ((config$7 modif$7 chang$3 upgrad$3 migrat$3) NEAR3 (fire$1wall filter)) WITH (rule protocol condition policy policies)).clm.	US-PGPUB; USPAT	OR	ON	2015/03/16 10:57
S52	57	S51 AND ((G06F21/6254 OR H04L63/20 OR H04L63/0263 OR H04L63/0227 OR H04L63/029).CPC. AND (726/11 OR 709/217 OR 705/4 OR 705/51).CCLS.)	US-PGPUB; USPAT	OR	ON	2015/03/16 11:01
S53	2	S50 AND S51	US-PGPUB; USPAT	OR	ON	2015/03/16 11:08

3/16/2015 11:37:29 AM
C:\Users\fmejia\Documents\EAST\Workspaces\13618298.wsp

Index of Claims	Application/Control No.	Applicant(s)/Patent Under Reexamination
	13618298	BURCHFIELD ET AL.
	Examiner	**Art Unit**
	FELICIANO MEJIA	2492

✓	Rejected	-	Cancelled	N	Non-Elected	A	Appeal
=	Allowed	÷	Restricted	I	Interference	O	Objected

☐ Claims renumbered in the same order as presented by applicant ☐ CPA ☒ T.D. ☐ R.1.47

CLAIM		DATE								
Final	Original	10/20/2014	03/16/2015							
1	1	✓	=							
	2	✓	-							
2	3	✓	=							
3	4	✓	=							
4	5	✓	=							
5	6	✓	=							
6	7	✓	=							
7	8	✓	=							
8	9	✓	=							
9	10	✓	=							
10	11	✓	=							
11	12	✓	=							
12	13	✓	=							
13	14	✓	=							
14	15	✓	=							
15	16	✓	=							
16	17	✓	=							
17	18	✓	=							
18	19	✓	=							
19	20	✓	=							

PTO/SB/08a (01-10)
Approved for use through 07/31/2012. OMB 0651-0031
U.S. Patent and Trademark Office; U.S. DEPARTMENT OF COMMERCE
Under the Paperwork Reduction Act of 1995, no persons are required to respond to a collection of information unless it contains a valid OMB control number.

INFORMATION DISCLOSURE STATEMENT BY APPLICANT (**Not for submission under 37 CFR 1.99)**	Application Number	13618298
	Filing Date	2012-09-14
	First Named Inventor	Nancy Burchfield et al.
	Art Unit	2492
	Examiner Name	Feliciano S. Mejia
	Attorney Docket Number	YOR920120481US2

U.S.PATENTS						Remove
Examiner Initial*	Cite No	Patent Number	Kind Code[1]	Issue Date	Name of Patentee or Applicant of cited Document	Pages,Columns,Lines where Relevant Passages or Relevant Figures Appear
	1	6820266	B1	2004-11-16	Minakawa et al.	
	2	7213027	B1	2007-05-01	Kominek et al.	
	3	7392539	B2	2008-06-24	Brooks et al.	
	4	7472412	B2	2008-12-30	Wolf et al.	
	5	7539741	B2	2009-05-26	Liong et al.	
	6	7747416	B2	2010-06-29	Deininger et al.	
	7	7809817	B2	2010-10-05	Hillier, Andrew D.	
	8	7853687	B2	2010-12-14	Le Moigne et al.	

ALL REFERENCES CONSIDERED EXCEPT WHERE LINED THROUGH. /F.M./

Receipt date: 02/26/2015	Application Number	13618298	13618298 - GAU: 2492
INFORMATION DISCLOSURE STATEMENT BY APPLICANT (**Not for submission under 37 CFR 1.99)**	Filing Date	2012-09-14	
	First Named Inventor	Nancy Burchfield et al.	
	Art Unit	2492	
	Examiner Name	Feliciano S. Mejia	
	Attorney Docket Number	YOR920120481US2	

	9	7966659	B1	2011-06-21	Wilkinson et al	
	10	8060553	B2	2011-11-15	Mamou et al.	
	11	8272031	B2	2012-09-18	Abderrazzaq et al.	
	12	8291468	B1	2012-10-16	Chickering, Roger A.	
	13	8516241	B2	2013-08-20	Chang et al.	
	14	8607300	B2	2013-12-10	Wang, Haojin	
	15	8671222	B2	2014-03-11	Gass et al.	
	16	8706771	B2	2014-04-22	Gass et al.	

If you wish to add additional U.S. Patent citation information please click the Add button. Add

U.S.PATENT APPLICATION PUBLICATIONS Remove

Examiner Initial*	Cite No	Publication Number	Kind Code[1]	Publication Date	Name of Patentee or Applicant of cited Document	Pages,Columns,Lines where Relevant Passages or Relevant Figures Appear
	1	20020133579	A1	2002-09-19	Bernhardt et al.	

ALL REFERENCES CONSIDERED EXCEPT WHERE LINED THROUGH. /F.M./

Receipt date: 02/26/2015	Application Number	13618298	13618298 - GAU: 2492
INFORMATION DISCLOSURE STATEMENT BY APPLICANT (**Not for submission under 37 CFR 1.99)**	Filing Date	2012-09-14	
	First Named Inventor	Nancy Burchfield et al.	
	Art Unit	2492	
	Examiner Name	Feliciano S. Mejia	
	Attorney Docket Number	YOR920120481US2	

	2	20030037327	A1	2003-02-20	Cicciarelli et al.	
	3	20030133552	A1	2003-07-17	Pillai et al.	
	4	20030154071	A1	2003-08-14	Shreve, Gregory M.	
	5	20030236690	A1	2003-12-25	Johnston-Watt et al.	
	6	20040039942	A1	2004-02-26	Cooper et al.	
	7	20040199609	A1	2004-10-07	Papatla et al.	
	8	20050015471	A1	2005-01-20	Zhang et al.	
	9	20050091068	A1	2005-04-28	Ramamoorthy et al.	
	10	20050149721	A1	2005-07-07	Lu, Chih-Chung	
	11	20050160361	A1	2005-07-21	Young, Alan	
	12	20050216897	A1	2005-09-29	Amrhein et al.	

ALL REFERENCES CONSIDERED EXCEPT WHERE LINED THROUGH. /F.M./

	13	20060047720	A1	2006-03-02	Kulkarni et al.	
	14	20060242690	A1	2006-10-26	Wolf et al.	
	15	20060288409	A1	2006-12-29	Bartal et al.	
	16	20070006122	A1	2007-01-04	Bailey et al.	
	17	20070136813	A1	2007-06-14	Wong, Hsing-Kuo	
	18	20070250615	A1	2007-10-25	Hillier, Andrew D.	
	19	20070250621	A1	2007-10-25	Hillier, Andrew D.	
	20	20070282982	A1	2007-12-06	Childress et al.	
	21	20080222290	A1	2008-09-11	Le Moigne et al.	
	22	20090158407	A1	2009-06-18	Nicodemus et al.	
	23	20090158302	A1	2009-06-18	Nicodemus et al.	

	24	20100064341	A1	2010-03-11	Aldera, Carlo	
	25	20100095348	A1	2010-04-15	Foster et al.	
	26	20100238945	A1	2010-09-23	McKernan et al.	
	27	20100332479	A1	2010-12-30	Prahlad et al.	
	28	20100332456	A1	2010-12-30	Prahlad et al.	
	29	20100332454	A1	2010-12-30	Prahlad et al.	
	30	20100332401	A1	2010-12-30	Prahlad et al.	
	31	20100333116	A1	2010-12-30	Prahlad et al.	
	32	20100332818	A1	2010-12-30	Prahlad et al.	
	33	20110078211	A1	2011-03-31	Gass et al.	
	34	20110072504	A1	2011-03-24	Abderrazzaq et al.	

	35	20110051715	A1	2011-03-03	Grunwald et al.	
	36	20110283269	A1	2011-11-17	Gass et al.	
	37	20110283270	A1	2011-11-17	Gass et al.	
	38	20110282995	A1	2011-11-17	Gass et al.	
	39	20110296391	A1	2011-12-01	Gass et al.	
	40	20110302647	A1	2011-12-08	Bhattacharya et al.	
	41	20120033681	A1	2012-02-09	Ridel et al.	
	42	20130019277	A1	2013-01-17	Chang et al.	
	43	20130191531	A1	2013-07-25	Kruglick, Ezekiel	
	44	20130276066	A1	2013-10-17	Buehl, Matthias	
	45	20130339882	A1	2013-12-19	Owen et al.	

Receipt date: 02/26/2015	Application Number	13618298 13618298 - GAU: 2492
INFORMATION DISCLOSURE STATEMENT BY APPLICANT (**Not for submission under 37 CFR 1.99)**	Filing Date	2012-09-14
	First Named Inventor	Nancy Burchfield et al.
	Art Unit	2492
	Examiner Name	Feliciano S. Mejia
	Attorney Docket Number	YOR920120481US2

	46					

If you wish to add additional U.S. Published Application citation information please click the Add button. Add

FOREIGN PATENT DOCUMENTS Remove

Examiner Initial*	Cite No	Foreign Document Number[3]	Country Code[2] ¡	Kind Code[4]	Publication Date	Name of Patentee or Applicant of cited Document	Pages,Columns,Lines where Relevant Passages or Relevant Figures Appear	T[5]
	1							☐

If you wish to add additional Foreign Patent Document citation information please click the Add button Add

NON-PATENT LITERATURE DOCUMENTS Remove

Examiner Initials*	Cite No	Include name of the author (in CAPITAL LETTERS), title of the article (when appropriate), title of the item (book, magazine, journal, serial, symposium, catalog, etc), date, pages(s), volume-issue number(s), publisher, city and/or country where published.	T[5]
	1		☐

If you wish to add additional non-patent literature document citation information please click the Add button Add

EXAMINER SIGNATURE

Examiner Signature	/Feliciano Mejia/	Date Considered	03/11/2015

*EXAMINER: Initial if reference considered, whether or not citation is in conformance with MPEP 609. Draw line through a citation if not in conformance and not considered. Include copy of this form with next communication to applicant.

[1] See Kind Codes of USPTO Patent Documents at www.USPTO.GOV or MPEP 901.04. [2] Enter office that issued the document, by the two-letter code (WIPO Standard ST.3). [3] For Japanese patent documents, the indication of the year of the reign of the Emperor must precede the serial number of the patent document. [4] Kind of document by the appropriate symbols as indicated on the document under WIPO Standard ST.16 if possible. [5] Applicant is to place a check mark here if English language translation is attached.

Receipt date: 02/26/2015	Application Number	13618298 13618298 - GAU: 2492
INFORMATION DISCLOSURE STATEMENT BY APPLICANT (**Not for submission under 37 CFR 1.99)**	Filing Date	2012-09-14
	First Named Inventor	Nancy Burchfield et al.
	Art Unit	2492
	Examiner Name	Feliciano S. Mejia
	Attorney Docket Number	YOR920120481US2

CERTIFICATION STATEMENT

Please see 37 CFR 1.97 and 1.98 to make the appropriate selection(s):

☐ That each item of information contained in the information disclosure statement was first cited in any communication from a foreign patent office in a counterpart foreign application not more than three months prior to the filing of the information disclosure statement. See 37 CFR 1.97(e)(1).

OR

☒ That no item of information contained in the information disclosure statement was cited in a communication from a foreign patent office in a counterpart foreign application, and, to the knowledge of the person signing the certification after making reasonable inquiry, no item of information contained in the information disclosure statement was known to any individual designated in 37 CFR 1.56(c) more than three months prior to the filing of the information disclosure statement. See 37 CFR 1.97(e)(2).

☐ See attached certification statement.

☐ The fee set forth in 37 CFR 1.17 (p) has been submitted herewith.

☐ A certification statement is not submitted herewith.

SIGNATURE

A signature of the applicant or representative is required in accordance with CFR 1.33, 10.18. Please see CFR 1.4(d) for the form of the signature.

Signature	/Michael J. Cooper/	Date (YYYY-MM-DD)	2015-02-26
Name/Print	Michael J. Cooper	Registration Number	57749

This collection of information is required by 37 CFR 1.97 and 1.98. The information is required to obtain or retain a benefit by the public which is to file (and by the USPTO to process) an application. Confidentiality is governed by 35 U.S.C. 122 and 37 CFR 1.14. This collection is estimated to take 1 hour to complete, including gathering, preparing and submitting the completed application form to the USPTO. Time will vary depending upon the individual case. Any comments on the amount of time you require to complete this form and/or suggestions for reducing this burden, should be sent to the Chief Information Officer, U.S. Patent and Trademark Office, U.S. Department of Commerce, P.O. Box 1450, Alexandria, VA 22313-1450. DO NOT SEND FEES OR COMPLETED FORMS TO THIS ADDRESS. **SEND TO: Commissioner for Patents, P.O. Box 1450, Alexandria, VA 22313-1450.**

Privacy Act Statement

The Privacy Act of 1974 (P.L. 93-579) requires that you be given certain information in connection with your submission of the attached form related to a patent application or patent. Accordingly, pursuant to the requirements of the Act, please be advised that: (1) the general authority for the collection of this information is 35 U.S.C. 2(b)(2); (2) furnishing of the information solicited is voluntary; and (3) the principal purpose for which the information is used by the U.S. Patent and Trademark Office is to process and/or examine your submission related to a patent application or patent. If you do not furnish the requested information, the U.S. Patent and Trademark Office may not be able to process and/or examine your submission, which may result in termination of proceedings or abandonment of the application or expiration of the patent.

The information provided by you in this form will be subject to the following routine uses:

1. The information on this form will be treated confidentially to the extent allowed under the Freedom of Information Act (5 U.S.C. 552) and the Privacy Act (5 U.S.C. 552a). Records from this system of records may be disclosed to the Department of Justice to determine whether the Freedom of Information Act requires disclosure of these record s.

2. A record from this system of records may be disclosed, as a routine use, in the course of presenting evidence to a court, magistrate, or administrative tribunal, including disclosures to opposing counsel in the course of settlement negotiations.

3. A record in this system of records may be disclosed, as a routine use, to a Member of Congress submitting a request involving an individual, to whom the record pertains, when the individual has requested assistance from the Member with respect to the subject matter of the record.

4. A record in this system of records may be disclosed, as a routine use, to a contractor of the Agency having need for the information in order to perform a contract. Recipients of information shall be required to comply with the requirements of the Privacy Act of 1974, as amended, pursuant to 5 U.S.C. 552a(m).

5. A record related to an International Application filed under the Patent Cooperation Treaty in this system of records may be disclosed, as a routine use, to the International Bureau of the World Intellectual Property Organization, pursuant to the Patent Cooperation Treaty.

6. A record in this system of records may be disclosed, as a routine use, to another federal agency for purposes of National Security review (35 U.S.C. 181) and for review pursuant to the Atomic Energy Act (42 U.S.C. 218(c)).

7. A record from this system of records may be disclosed, as a routine use, to the Administrator, General Services, or his/her designee, during an inspection of records conducted by GSA as part of that agency's responsibility to recommend improvements in records management practices and programs, under authority of 44 U.S.C. 2904 and 2906. Such disclosure shall be made in accordance with the GSA regulations governing inspection of records for this purpose, and any other relevant (i.e., GSA or Commerce) directive. Such disclosure shall not be used to make determinations about individuals.

8. A record from this system of records may be disclosed, as a routine use, to the public after either publication of the application pursuant to 35 U.S.C. 122(b) or issuance of a patent pursuant to 35 U.S.C. 151. Further, a record may be disclosed, subject to the limitations of 37 CFR 1.14, as a routine use, to the public if the record was filed in an application which became abandoned or in which the proceedings were terminated and which application is referenced by either a published application, an application open to public inspections or an issued patent.

9. A record from this system of records may be disclosed, as a routine use, to a Federal, State, or local law enforcement agency, if the USPTO becomes aware of a violation or potential violation of law or regulation.

ALL REFERENCES CONSIDERED EXCEPT WHERE LINED THROUGH. /F.M./

OPAP
JUN 24 2015
PATENT & TRADEMARK OFFICE

PTO/SB/122 (09-03)
Approved for use through 11/30/2005. OMB 0651-0035
U.S. Patent and Trademark Office; U.S. DEPARTMENT OF COMMERCE
Under the Paperwork Reduction Act of 1995, no persons are required to respond to a collection of information unless it displays a valid OMB control number.

CHANGE OF CORRESPONDENCE ADDRESS
Application

Address to:
Commissioner for Patents
P.O. Box 1450
Alexandria, VA 22313-1450.

Application Number	13/618,298
Filing Date	September 14, 2012
First Named Inventor	Nancy Burchfield et al.
Art Unit	2492
Examiner Name	Feliciano S. Mejia
Attorney Docket Number	YOR920120481US2

Please change the Correspondence Address for the above-identified patent application to:

☑ Customer Number : 00877

OR

☐ Firm or Individual Name					
Address					
Address					
City		State		Zip	
Country					
Telephone		Fax			

This form cannot be used to change the data associated with a Customer Number. To change the data associated with an existing Customer Number use "Request for Customer Number Data Change" (PTO/SB/124).

I am the:

☐ Applicant/Inventor

☐ Assignee of record of the entire interest.
Statement under 37 CFR 3.73(b) is enclosed. (Form PTO/SB/96).

☑ Attorney or Agent of record. Registration Number 57,749.

☐ Registered practitioner named in the application transmittal letter in an application without an executed oath or declaration. See 37 CFR 1.33(a)(1). Registration Number_____.

Typed or Printed Name Michael J. Cooper

Signature M. J. Cooper

Date April 7, 2015 Telephone (203) 255-6560

NOTE: Signatures of all the inventors or assignees of record of the entire interest or their representative(s) are required. Submit multiple forms if more than one signature is required, see below*.

☑ *Total of 1 forms are submitted.

This collection of information is required by 37 CFR 1.33. The information is required to obtain or retain a benefit by the public which is to file (and by the USPTO to process) an application. Confidentiality is governed by 35 U.S.C. 122 and 37 CFR 1.14. This collection is estimated to take 3 minutes to complete, including gathering, preparing, and submitting the completed application form to the USPTO. Time will vary depending upon the individual case. Any comments on the amount of time you require to complete this form and/or suggestions for reducing this burden, should be sent to the Chief Information Officer, U.S. Patent and Trademark Office, U.S. Department of Commerce, P.O. Box 1450, Alexandria, VA 22313-1450. DO NOT SEND FEES OR COMPLETED FORMS TO THIS ADDRESS. SEND TO: **Commissioner for Patents, P.O. Box 1450, Alexandria, VA 22313-1450.**

If you need assistance in completing the form, call 1-800-PTO-9199 and select option 2.

Best Available Copy

PART B - FEE(S) TRANSMITTAL

Complete and send this form, together with applicable fee(s), to: Mail Mail Stop ISSUE FEE
Commissioner for Patents
P.O. Box 1450
Alexandria, Virginia 22313-1450
or Fax (571)-273-2885

INSTRUCTIONS: This form should be used for transmitting the ISSUE FEE and PUBLICATION FEE (if required). Blocks 1 through 5 should be completed where appropriate. All further correspondence including the Patent, advance orders and notification of maintenance fees will be mailed to the current correspondence address as indicated unless corrected below or directed otherwise in Block 1, by (a) specifying a new correspondence address; and/or (b) indicating a separate "FEE ADDRESS" for maintenance fee notifications.

CURRENT CORRESPONDENCE ADDRESS (Note: Use Block 1 for any change of address)

48062 7590 03/25/2015
RYAN, MASON & LEWIS, LLP
1175 Post Road East
2nd Floor
Westport, CT 06880

OPAP AKMA-3 JUN 24 2015 PATENT & TRADEMARK OFFICE

Note: A certificate of mailing can only be used for domestic mailings of the Fee(s) Transmittal. This certificate cannot be used for any other accompanying papers. Each additional paper, such as an assignment or formal drawing, must have its own certificate of mailing or transmission.

Certificate of Mailing or Transmission
I hereby certify that this Fee(s) Transmittal is being deposited with the United States Postal Service with sufficient postage for first class mail in an envelope addressed to the Mail Stop ISSUE FEE address above, or being facsimile transmitted to the USPTO (571) 273-2885, on the date indicated below.

(Depositor's name)
(Signature)
(Date)

APPLICATION NO.	FILING DATE	FIRST NAMED INVENTOR	ATTORNEY DOCKET NO.	CONFIRMATION NO.
13/618,298	09/14/2012	Nancy Burchfield	YOR920120481US2	1015

TITLE OF INVENTION: Automatically Recommending Firewall Rules During Enterprise Information Technology Transformation

APPLN. TYPE	ENTITY STATUS	ISSUE FEE DUE	PUBLICATION FEE DUE	PREV. PAID ISSUE FEE	TOTAL FEE(S) DUE	DATE DUE
nonprovisional	UNDISCOUNTED	$960	$0	$0	$960	06/25/2015

06/25/2015 SMOHAMM1 00000002 500510 13618298
01 FC:1501 960.00 DA

EXAMINER	ART UNIT	CLASS-SUBCLASS
MEJIA, FELICIANO S	2492	726-001000

1. Change of correspondence address or indication of "Fee Address" (37 CFR 1.363).
☒ Change of correspondence address (or Change of Correspondence Address form PTO/SB/122) attached.
☐ "Fee Address" indication (or "Fee Address" Indication form PTO/SB/47; Rev 03-02 or more recent) attached. Use of a Customer Number is required.

2. For printing on the patent front page, list
(1) The names of up to 3 registered patent attorneys or agents OR, alternatively,
(2) The name of a single firm (having as a member a registered attorney or agent) and the names of up to 2 registered patent attorneys or agents. If no name is listed, no name will be printed.
1 Ryan, Mason&Lewis, LLP
2
3

3. ASSIGNEE NAME AND RESIDENCE DATA TO BE PRINTED ON THE PATENT (print or type)
PLEASE NOTE: Unless an assignee is identified below, no assignee data will appear on the patent. If an assignee is identified below, the document has been filed for recordation as set forth in 37 CFR 3.11. Completion of this form is NOT a substitute for filing an assignment.

(A) NAME OF ASSIGNEE: International Business Machines Corporation
(B) RESIDENCE: (CITY and STATE OR COUNTRY): Armonk, New York

Please check the appropriate assignee category or categories (will not be printed on the patent): ☐ Individual ☒ Corporation or other private group entity ☐ Government

4a. The following fee(s) are submitted:
☒ Issue Fee
☐ Publication Fee (No small entity discount permitted)
☐ Advance Order - # of Copies

4b. Payment of Fee(s): **(Please first reapply any previously paid issue fee shown above)**
☐ A check is enclosed.
☐ Payment by credit card. Form PTO-2038 is attached.
☒ The director is hereby authorized to charge the required fee(s), any deficiency, or credits any overpayment, to Deposit Account Number 500510 (enclose an extra copy of this form).

5. **Change in Entity Status** (from status indicated above)
☐ Applicant certifying micro entity status. See 37 CFR 1.29 — NOTE: Absent a valid certification of Micro Entity Status (see forms PTO/SB/15A and 15B), issue fee payment in the micro entity amount will not be accepted at the risk of application abandonment.
☐ Applicant asserting small entity status. See 37 CFR 1.27 — NOTE: If the application was previously under micro entity status, checking this box will be taken to be a notification of loss of entitlement to micro entity status.
☐ Applicant changing to regular undiscounted fee status. — NOTE: Checking this box will be taken to be a notification of loss of entitlement to small or micro entity status, as applicable.

NOTE: This form must be signed in accordance with 37 CFR 1.31 and 1.33. See 37 CFR 1.4 for signature requirements and certifications.

Authorized Signature M. J. Cooper Date 4/7/15
Typed or printed name Michael J. Cooper Registration No. 57749

UNITED STATES PATENT AND TRADEMARK OFFICE

UNITED STATES DEPARTMENT OF COMMERCE
United States Patent and Trademark Office
Address: COMMISSIONER FOR PATENTS
P.O. Box 1450
Alexandria, Virginia 22313-1450
www.uspto.gov

APPLICATION NO.	ISSUE DATE	PATENT NO.	ATTORNEY DOCKET NO.	CONFIRMATION NO.
13/618,298	08/04/2015	9100363	YOR920120481US2	1015

877 7590 07/15/2015

IBM CORPORATION
IP Law Department
294 Route 100
P.O. BOX 100
Somers, NY 10589-0100

ISSUE NOTIFICATION

The projected patent number and issue date are specified above.

Determination of Patent Term Adjustment under 35 U.S.C. 154 (b)
(application filed on or after May 29, 2000)

The Patent Term Adjustment is 294 day(s). Any patent to issue from the above-identified application will include an indication of the adjustment on the front page.

If a Continued Prosecution Application (CPA) was filed in the above-identified application, the filing date that determines Patent Term Adjustment is the filing date of the most recent CPA.

Applicant will be able to obtain more detailed information by accessing the Patent Application Information Retrieval (PAIR) WEB site (http://pair.uspto.gov).

Any questions regarding the Patent Term Extension or Adjustment determination should be directed to the Office of Patent Legal Administration at (571)-272-7702. Questions relating to issue and publication fee payments should be directed to the Application Assistance Unit (AAU) of the Office of Data Management (ODM) at (571)-272-4200.

APPLICANT(s) (Please see PAIR WEB site http://pair.uspto.gov for additional applicants):

Nancy Burchfield, Dana Point, CA;
Nathaniel Hang, Ladera Ranch, CA;
Rafah A. Hosn, New York, NY;
James Murray, Durham, NC;
Harigovind V. Ramasamy, Ossining, NY;

The United States represents the largest, most dynamic marketplace in the world and is an unparalleled location for business investment, innovation, and commercialization of new technologies. The USA offers tremendous resources and advantages for those who invest and manufacture goods here. Through SelectUSA, our nation works to encourage and facilitate business investment. To learn more about why the USA is the best country in the world to develop technology, manufacture products, and grow your business, visit SelectUSA.gov.

To: iplawyor@us.ibm.com,,
From: PAIR_eOfficeAction@uspto.gov
Cc: PAIR_eOfficeAction@uspto.gov
Subject: Private PAIR Correspondence Notification for Customer Number 877

Jul 16, 2015 05:54:38 AM

Dear PAIR Customer:

IBM CORPORATION
IP Law Department
294 Route 100
P.O. BOX 100
Somers, NY 10589-0100
UNITED STATES

The following USPTO patent application(s) associated with your Customer Number, 877 , have new outgoing correspondence. This correspondence is now available for viewing in Private PAIR.

The official date of notification of the outgoing correspondence will be indicated on the form PTOL-90 accompanying the correspondence.

Disclaimer:
The list of documents shown below is provided as a courtesy and is not part of the official file wrapper. The content of the images shown in PAIR is the official record.

Application	Document	Mailroom Date	Attorney Docket No.
13618298	ISSUE.NTF	07/15/2015	YOR920120481US2

To view your correspondence online or update your email addresses, please visit us anytime at https://sportal.uspto.gov/secure/myportal/privatepair.

If you have any questions, please email the Electronic Business Center (EBC) at EBC@uspto.gov with 'e-Office Action' on the subject line or call 1-866-217-9197 during the following hours:

Monday - Friday 6:00 a.m. to 12:00 a.m.

Thank you for prompt attention to this notice,

UNITED STATES PATENT AND TRADEMARK OFFICE

PATENT APPLICATION INFORMATION RETRIEVAL SYSTEM