US007130576B1

(12) **United States Patent**
Gurantz et al.

(10) **Patent No.: US 7,130,576 B1**
(45) **Date of Patent: Oct. 31, 2006**

(54) **SIGNAL SELECTOR AND COMBINER FOR BROADBAND CONTENT DISTRIBUTION**

(75) Inventors: **Itzhak Gurantz**, San Diego, CA (US); **Ladd El Wardani**, La Jolla, CA (US); **Michael Landry**, San Diego, CA (US)

(73) Assignee: **Entropic Communications, Inc.**, San Diego, CA (US)

(*) Notice: Subject to any disclaimer, the term of this patent is extended or adjusted under 35 U.S.C. 154(b) by 475 days.

(21) Appl. No.: **10/289,011**

(22) Filed: **Nov. 6, 2002**

Related U.S. Application Data

(60) Provisional application No. 60/345,965, filed on Nov. 7, 2001, provisional application No. 60/333,722, filed on Nov. 27, 2001, provisional application No. 60/358,817, filed on Feb. 22, 2002.

(51) **Int. Cl.**
H04H 1/00 (2006.01)

(52) **U.S. Cl.** **455/3.02**; 455/3.01; 455/3.04; 455/427; 725/71; 725/78

(58) **Field of Classification Search** 455/3.01–3.05, 455/103, 137, 12.1, 20, 427; 725/64, 71, 725/78, 98, 118
See application file for complete search history.

(56) **References Cited**

U.S. PATENT DOCUMENTS

5,760,822 A * 6/1998 Coutinho 348/121
6,437,837 B1 * 8/2002 Seo 348/735
6,441,797 B1 * 8/2002 Shah 343/840
6,493,873 B1 * 12/2002 Williams 725/78
6,556,807 B1 * 4/2003 Horie et al. 455/3.02
6,600,730 B1 * 7/2003 Davis et al. 370/343
6,947,702 B1 * 9/2005 Green et al. 455/3.02
2003/0008628 A1 * 1/2003 Lindell et al. 455/180.1
2003/0031191 A1 * 2/2003 El Wardani et al. 370/401
2003/0115608 A1 * 6/2003 Armstrong et al. 725/78
2004/0058642 A1 * 3/2004 Merio 455/3.02
2004/0060065 A1 * 3/2004 James et al. 725/71
2005/0005296 A1 * 1/2005 Bargroff et al. 725/63

* cited by examiner

Primary Examiner—Matthew D. Anderson
Assistant Examiner—Sujatha Sharma
(74) *Attorney, Agent, or Firm*—Michael W. Landry

(57) **ABSTRACT**

In a satellite receiving system, program channels are selected from one or more broadband signals and combined with other selected channels and transmitted from a first unit, for example an outdoor unit, to a second unit, for example a gateway, server, or set-top box, using a single cable. Channels can be selected by digitizing the broadband signal then digitally filtering to isolate the desired channels. The outputs of several LNBs can be selected and combined into one signal. Multiple set-top boxes can receive independent signals over a single cable from the outdoor unit.

23 Claims, 17 Drawing Sheets

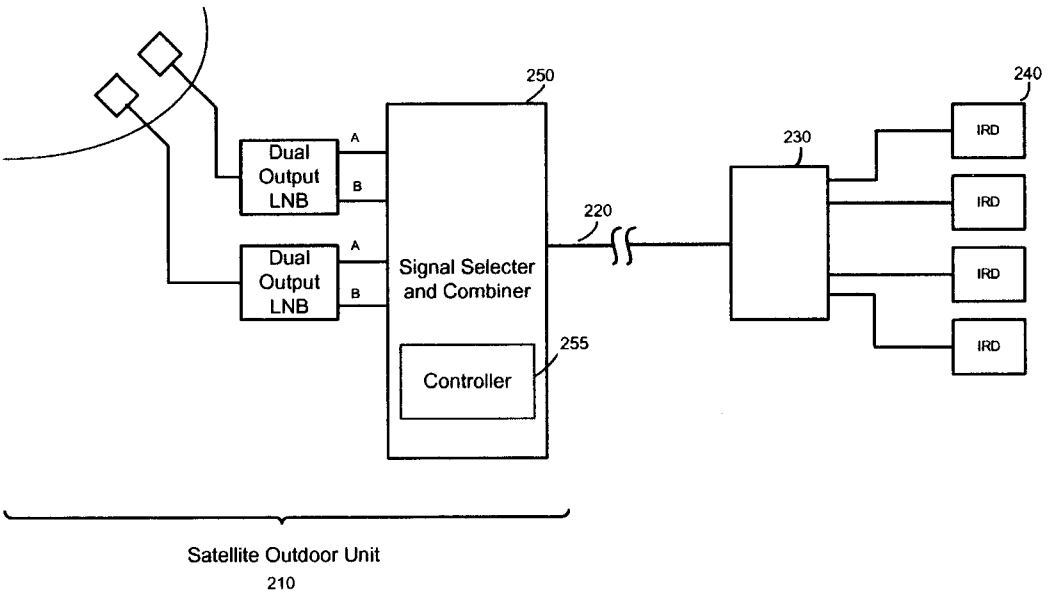

Comcast, Ex. 1043

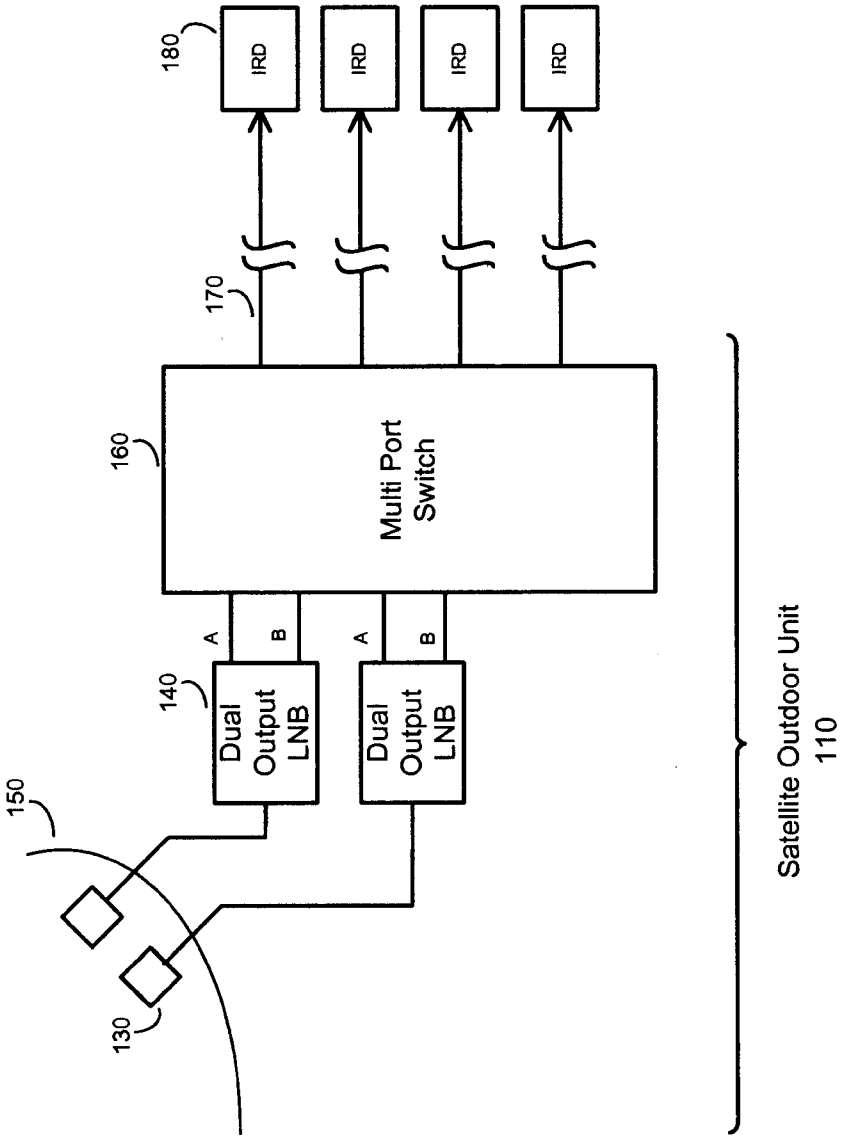

FIG. 1
Prior Art

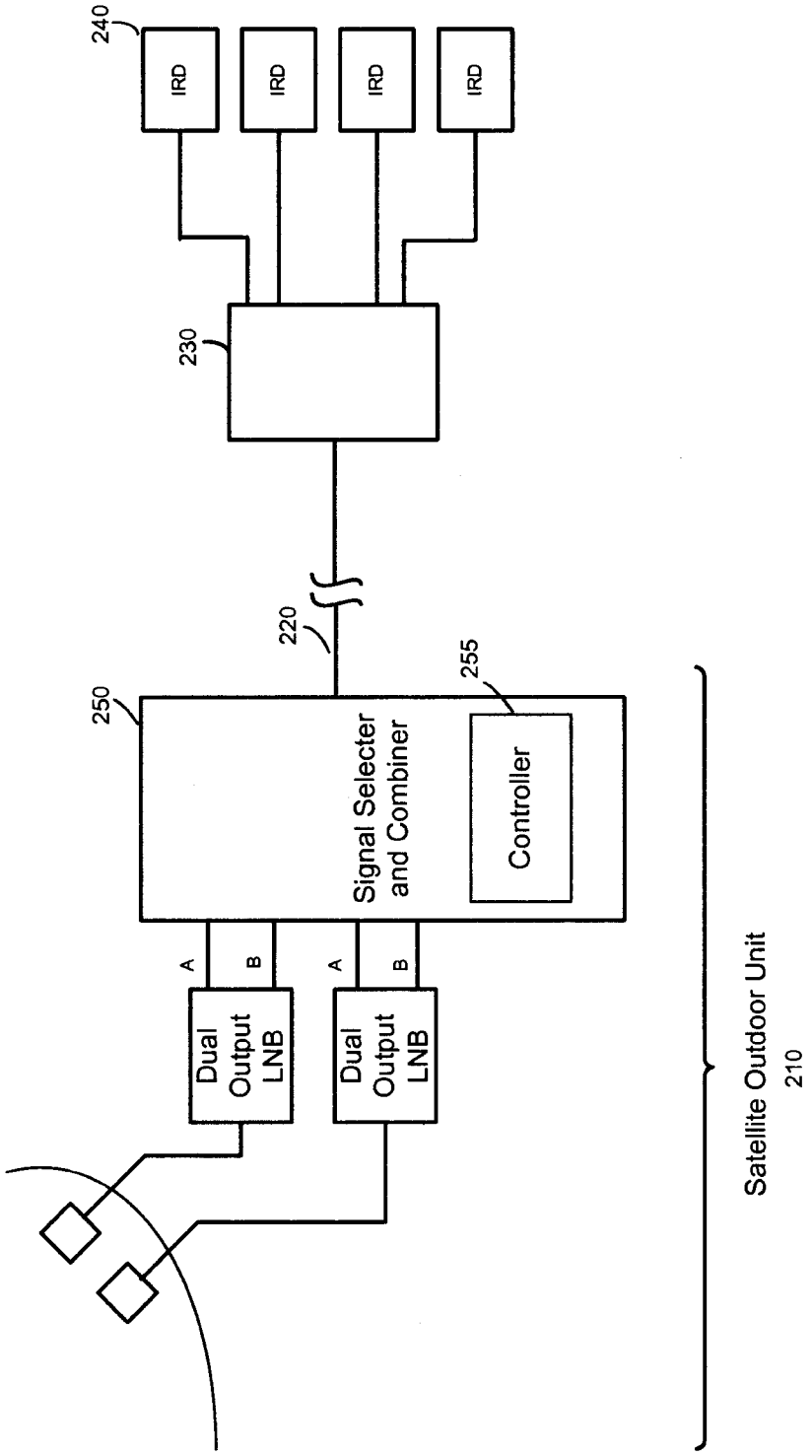
240
IRD
IRD
IRD
IRD
230
220
250
Signal Selecter and Combiner
255
Controller
A
B
A
B
Dual Output LNB
Dual Output LNB
Satellite Outdoor Unit
210

FIG. 2

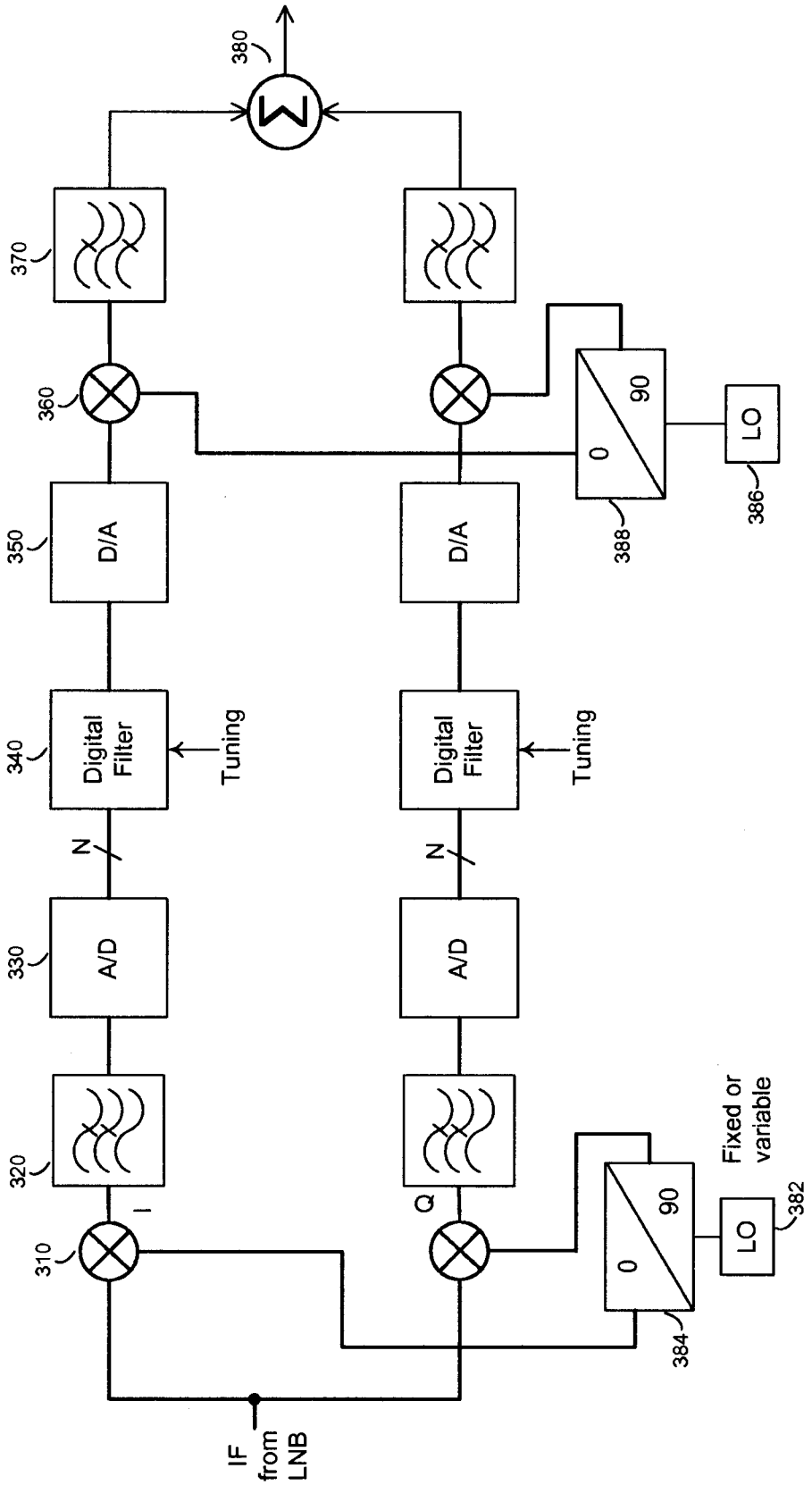
380
370
360
350
D/A
340
Digital Filter
Tuning
N
330
A/D
320
310
I
Q
IF from LNB
0
90
388
LO
386
384
Fixed or variable
382

FIG. 3

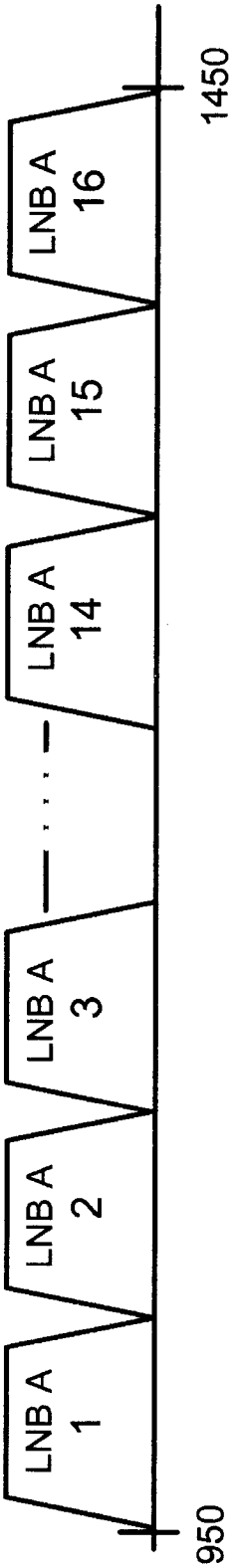

FIG. 4

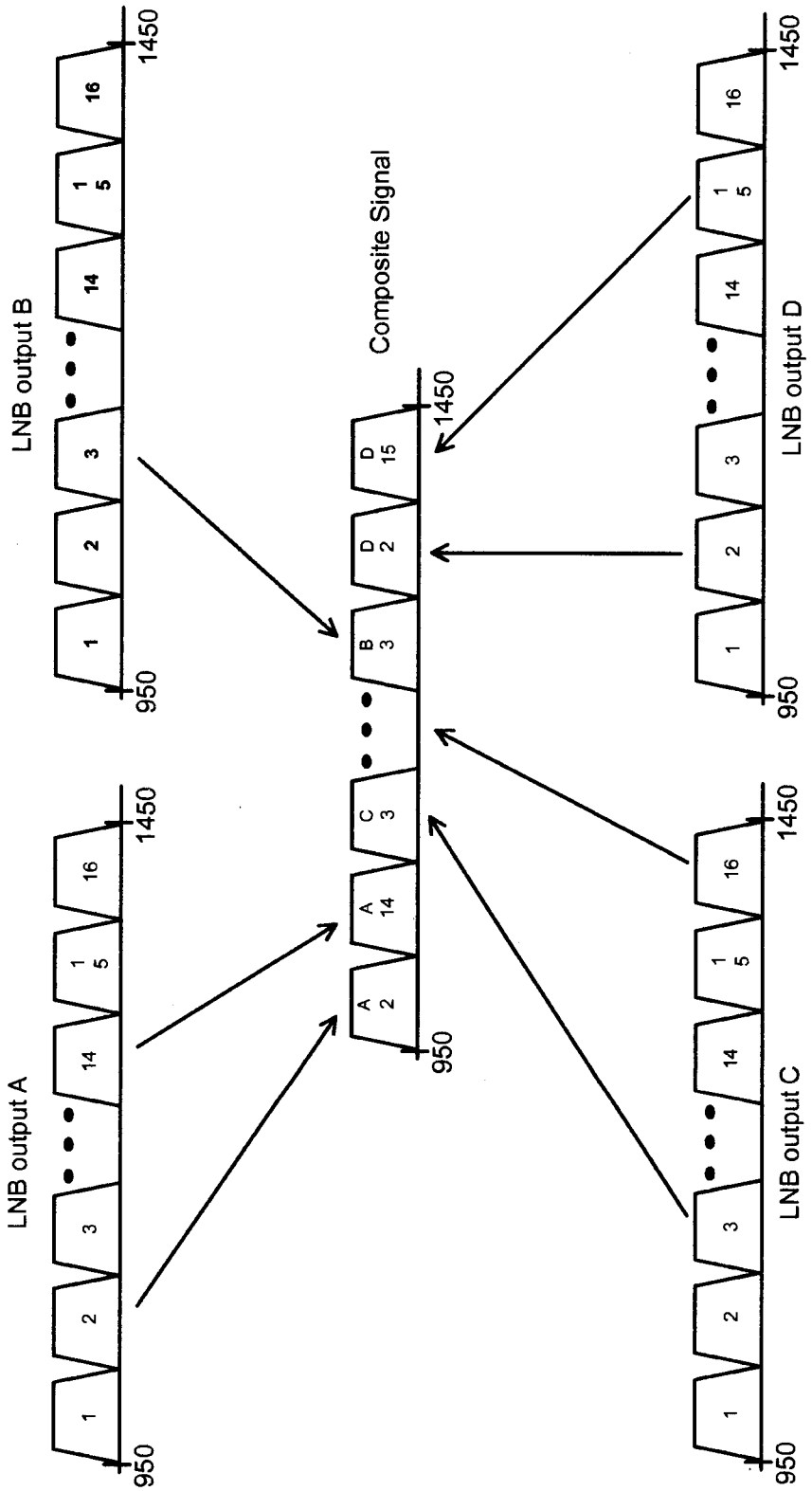
LNB output A
LNB output B
LNB output C
LNB output D
Composite Signal
950
1450
1
2
3
14
15
16
A 2
A 14
C 3
B 3
D 2
D 15

FIG. 5

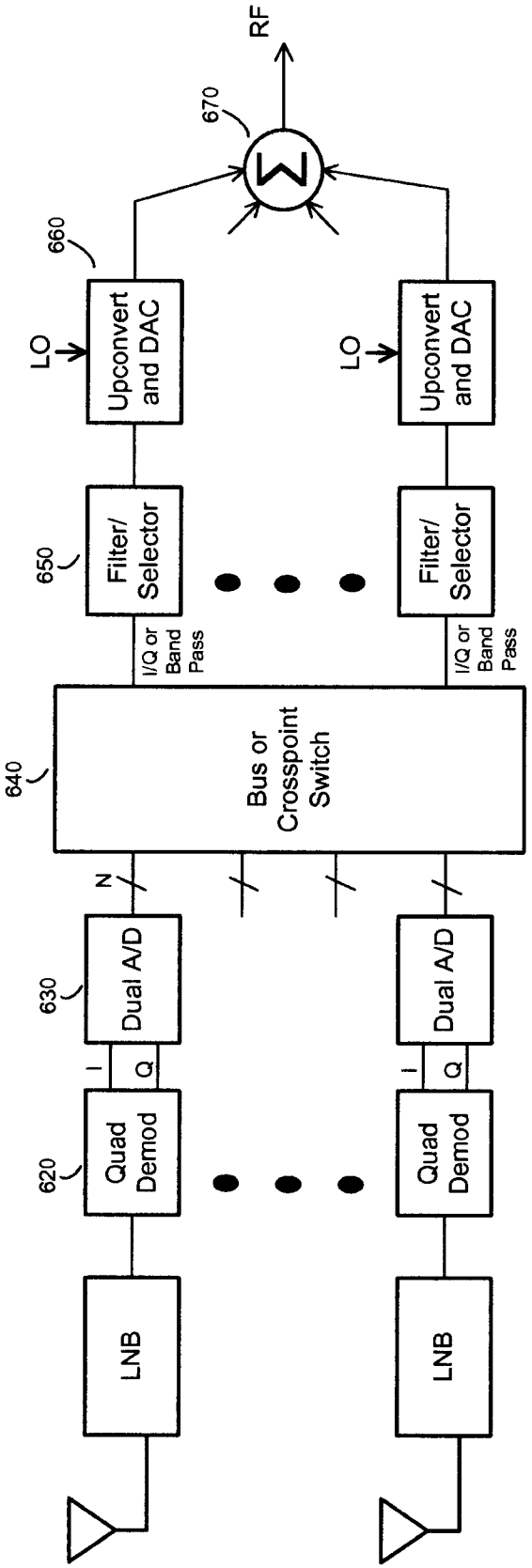

Digital Routing of Digitized Signals

FIG. 6

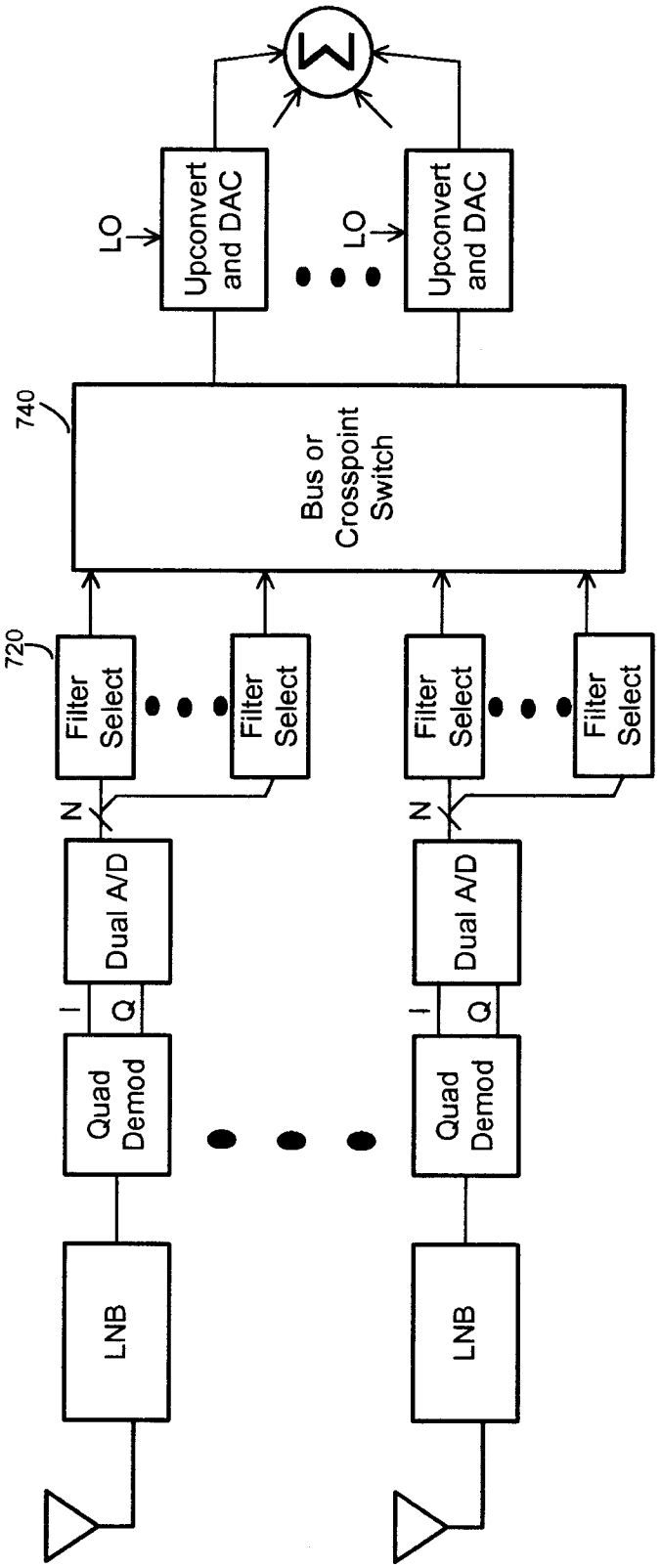

Digital Routing of Digitized Signals

FIG. 7

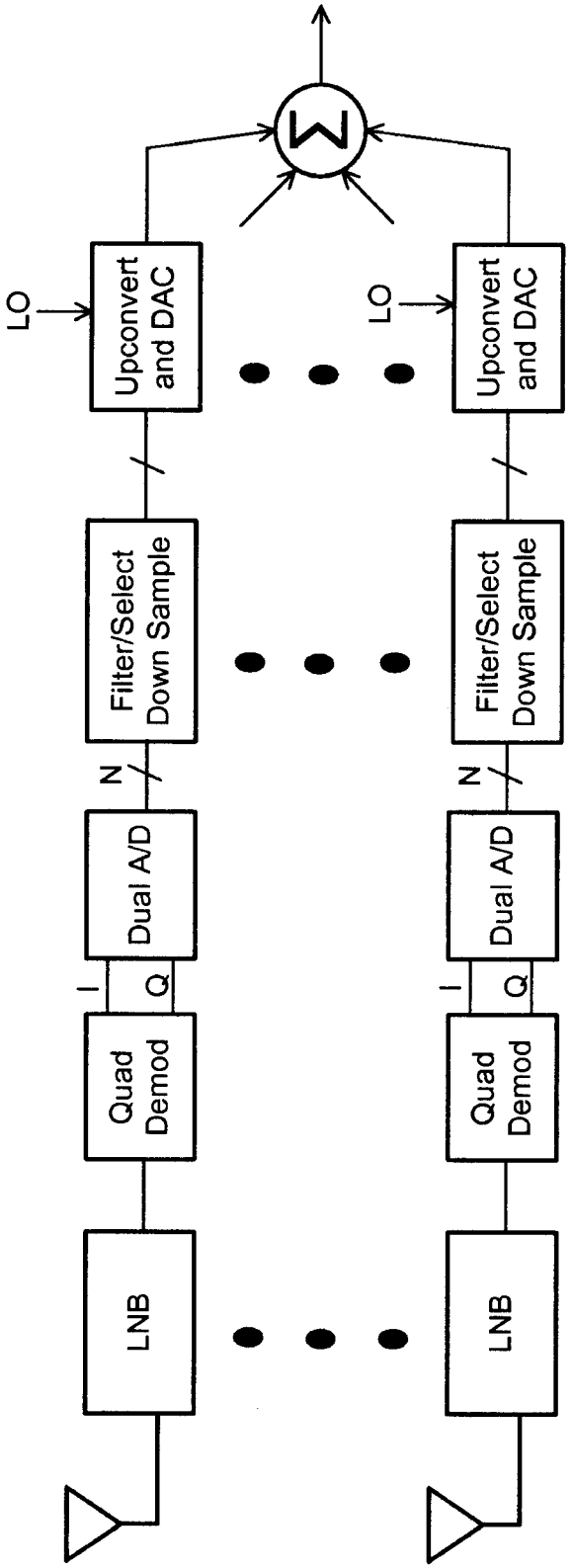
LNB
Quad Demod
I
Q
Dual A/D
N
Filter/Select Down Sample
LO
Upconvert and DAC
Σ
LNB
Quad Demod
I
Q
Dual A/D
N
Filter/Select Down Sample
LO
Upconvert and DAC

FIG. 8

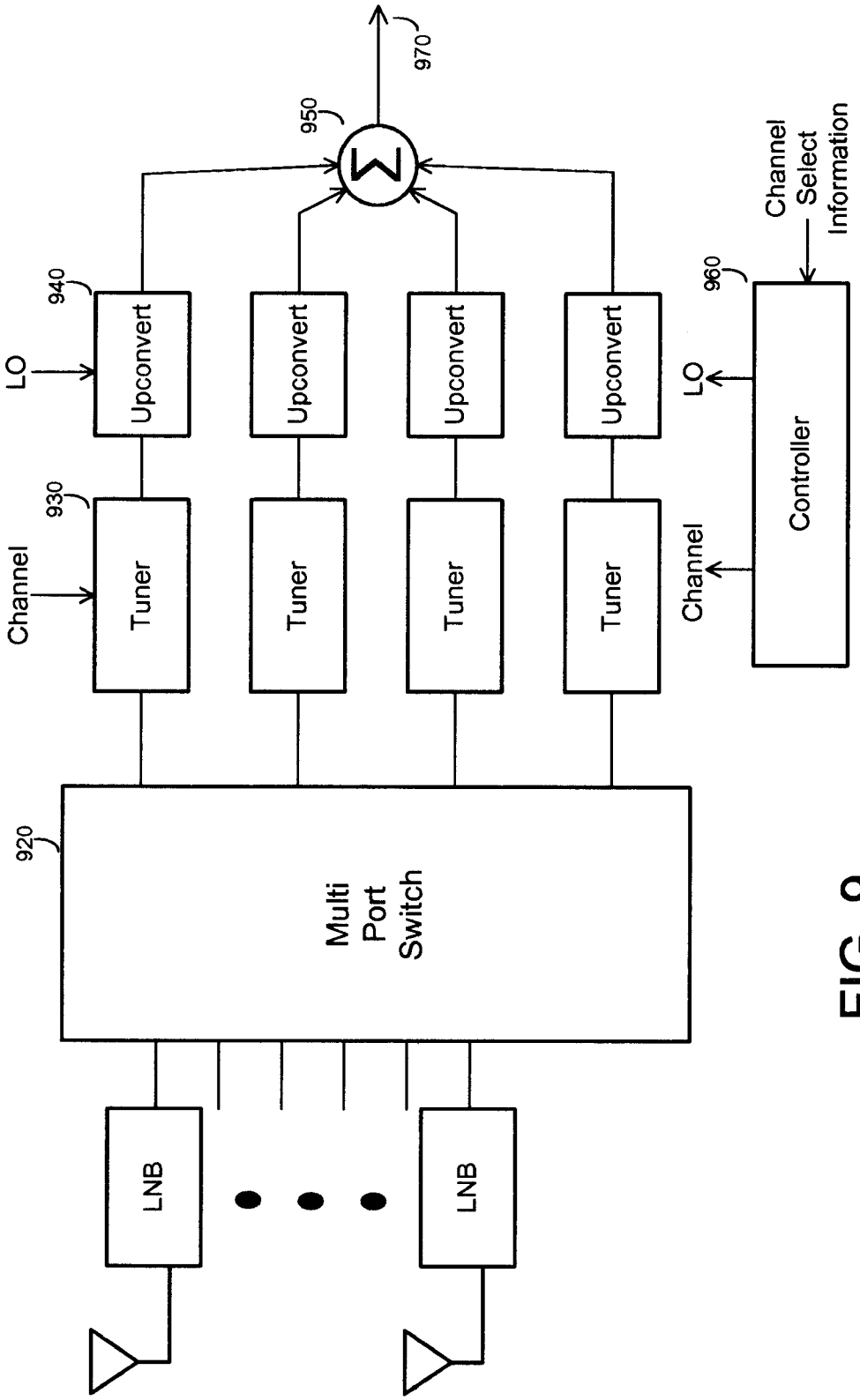
970
950
940
LO
Upconvert
Upconvert
Upconvert
Upconvert
930
Channel
Tuner
Tuner
Tuner
Tuner
960
Channel Select Information
LO
Controller
Channel
920
Multi Port Switch
LNB
LNB

FIG. 9

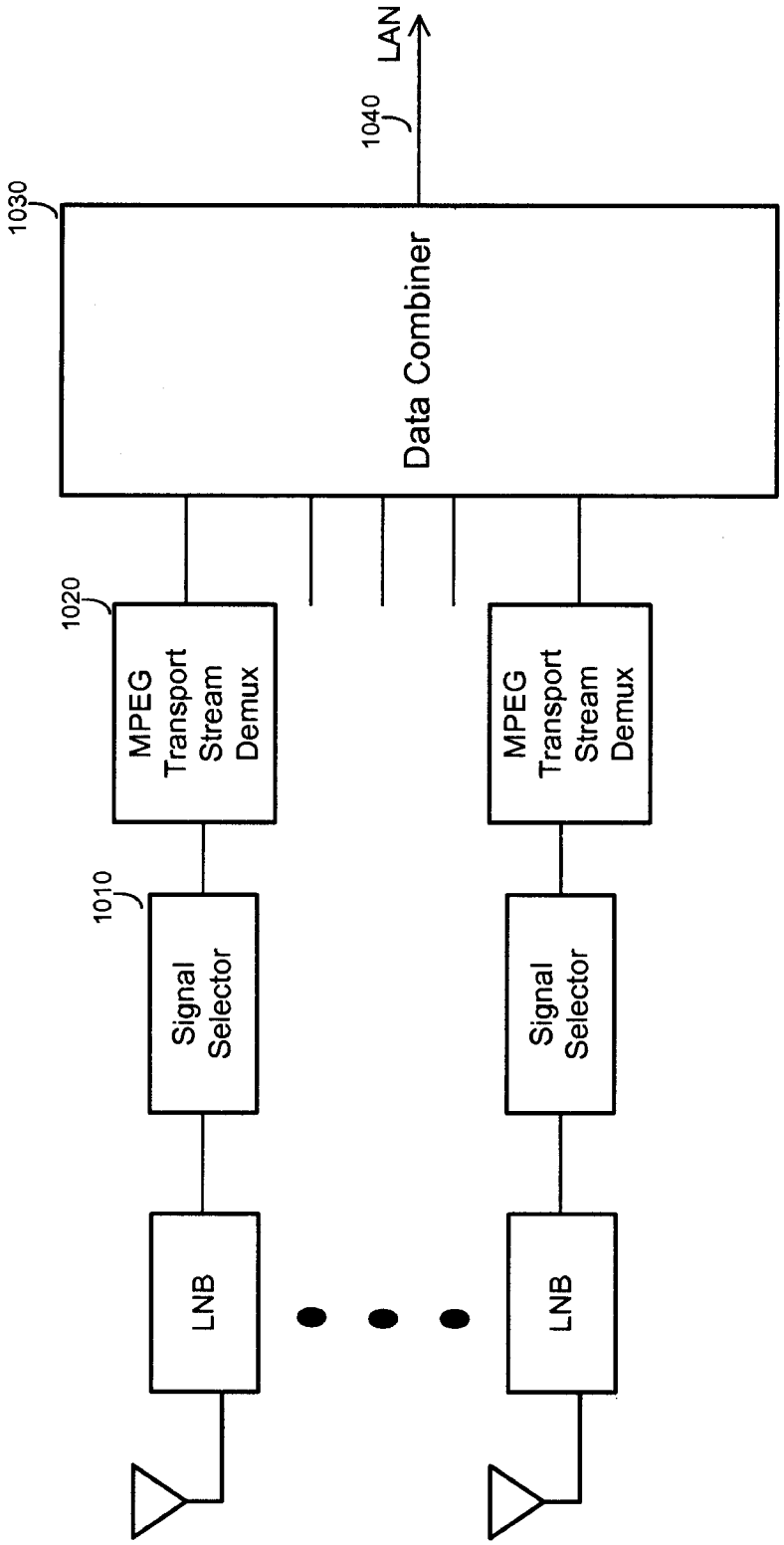
1030
Data Combiner
1040
LAN
1020
MPEG Transport Stream Demux
MPEG Transport Stream Demux
1010
Signal Selector
Signal Selector
LNB
LNB

FIG. 10

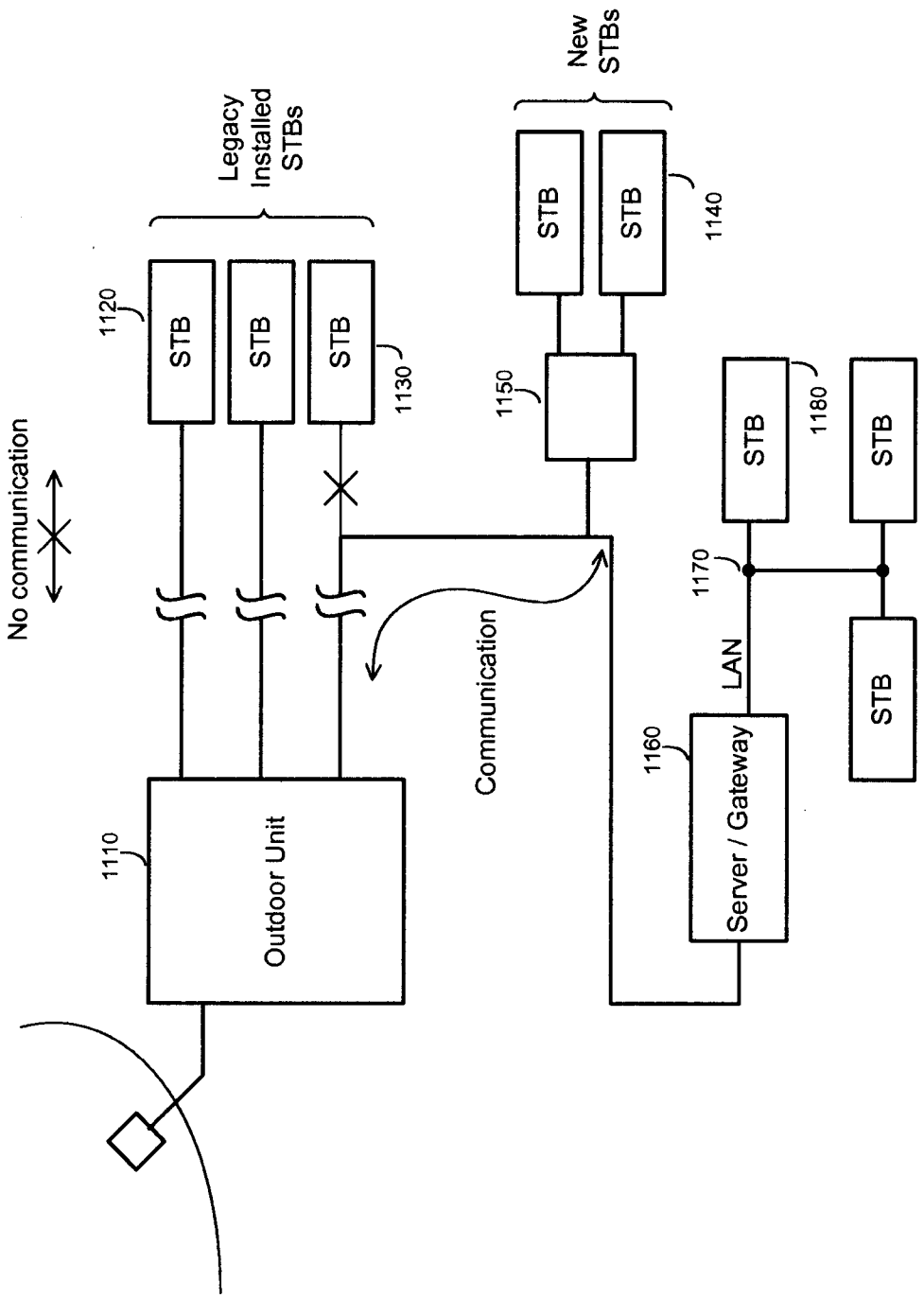
No communication
Legacy Installed STBs
STB
STB
STB
1120
1130
1110
Outdoor Unit
Communication
New STBs
STB
STB
1140
1150
STB
1180
STB
1170
LAN
STB
1160
Server / Gateway

FIG. 11

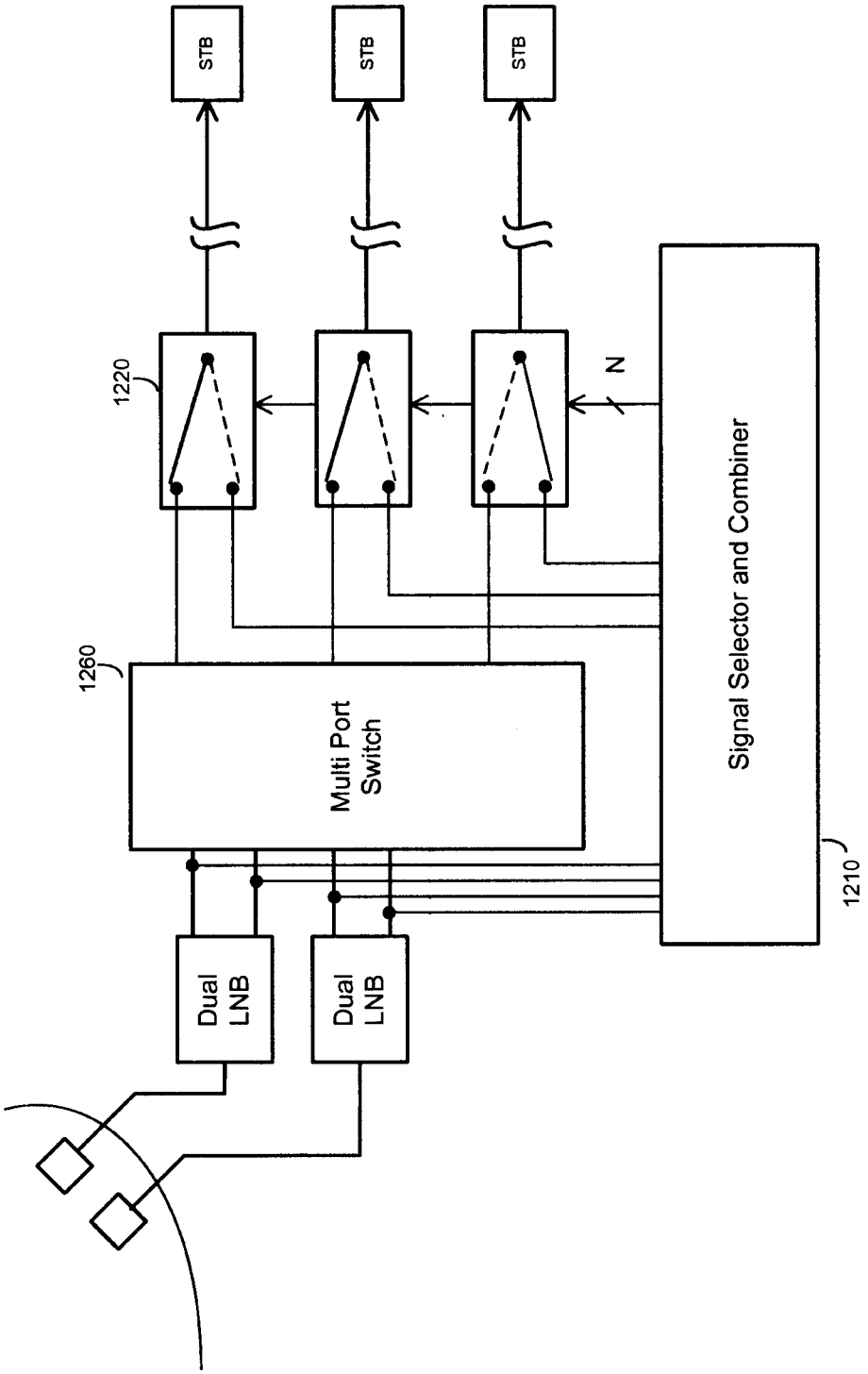
STB
STB
STB
1220
N
Signal Selector and Combiner
1260
Multi Port Switch
1210
Dual LNB
Dual LNB

FIG. 12

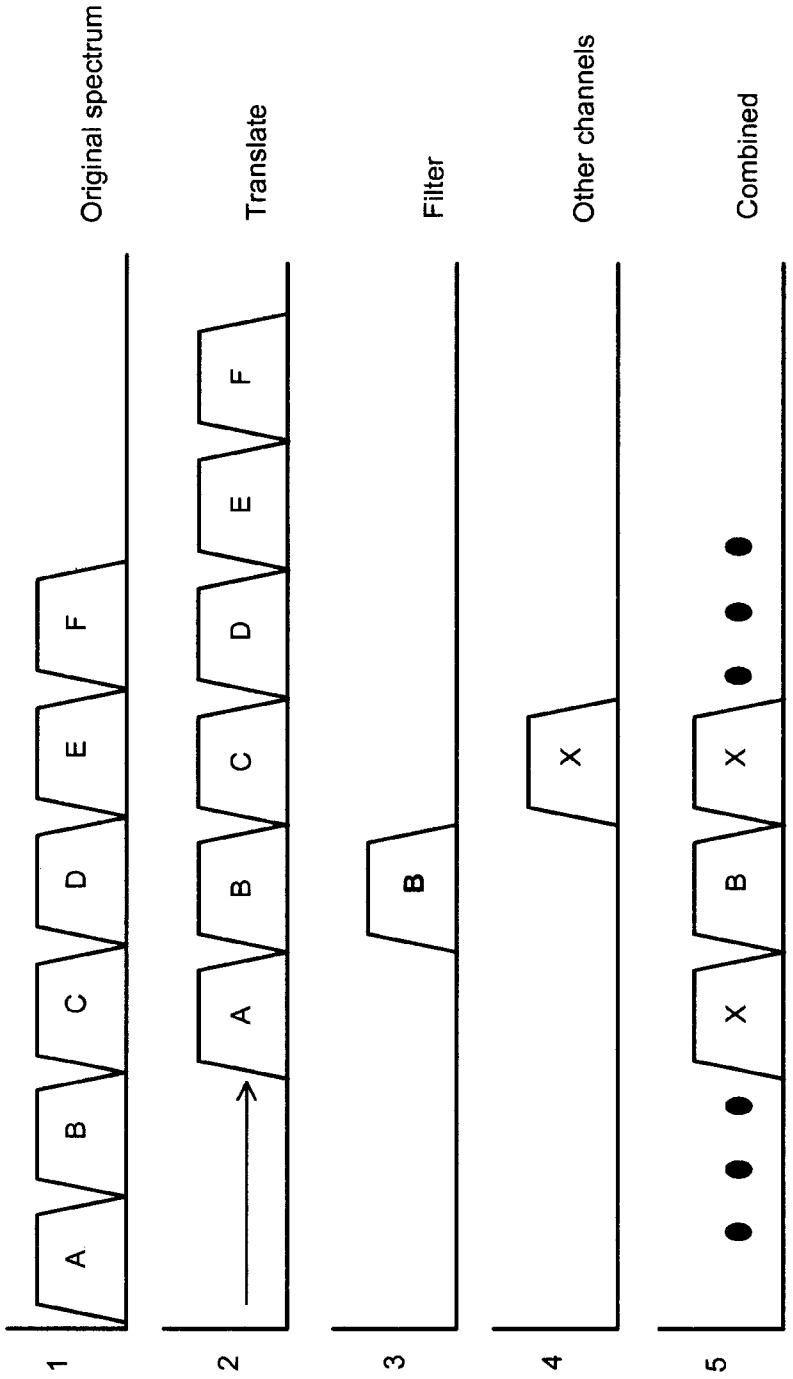
Original spectrum
Translate
Filter
Other channels
Combined
1
2
3
4
5
A
B
C
D
E
F
X

FIG. 13

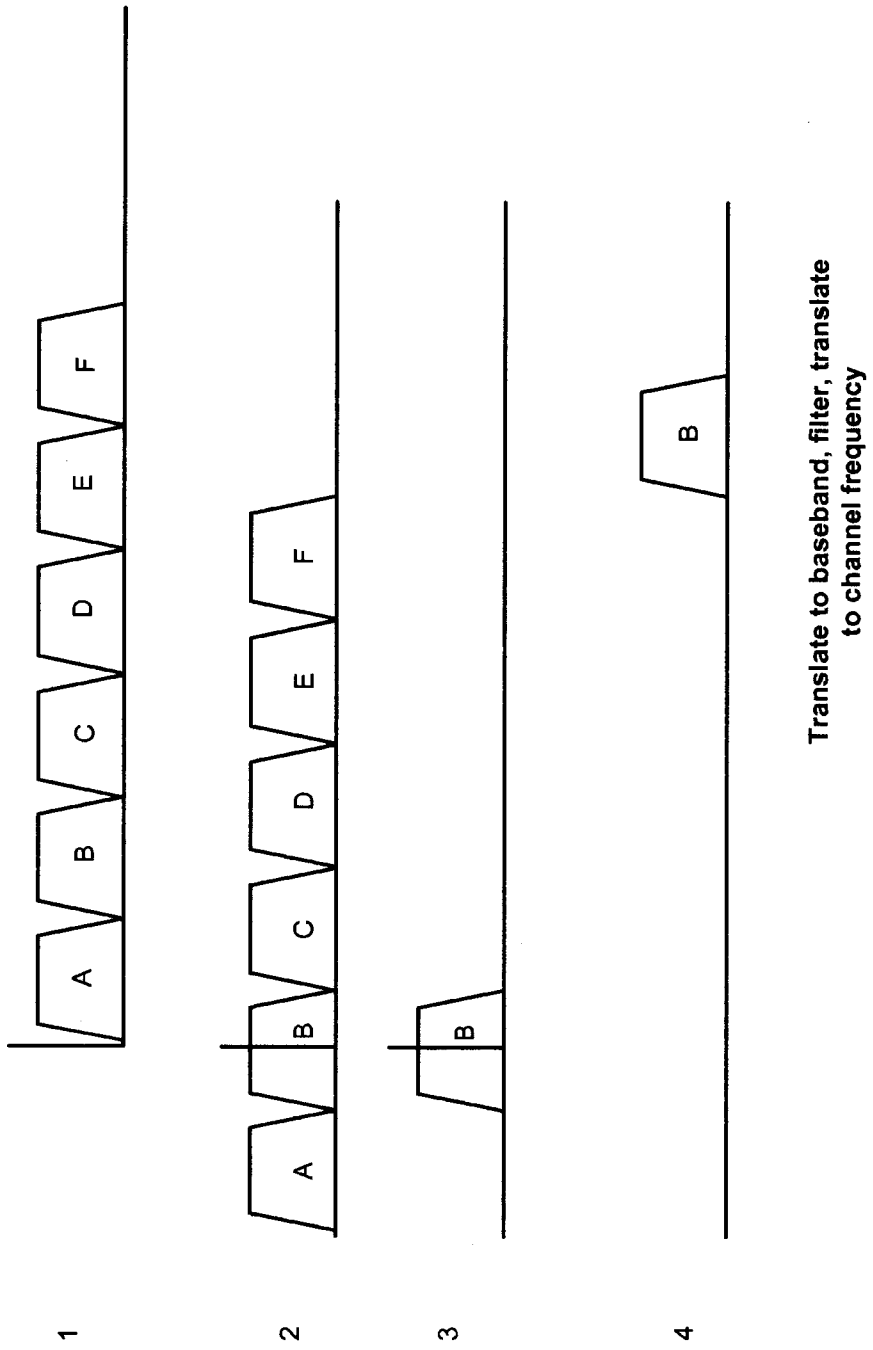
1
A
B
C
D
E
F
2
A
B
C
D
E
F
3
B
4
B
Translate to baseband, filter, translate to channel frequency

FIG. 14

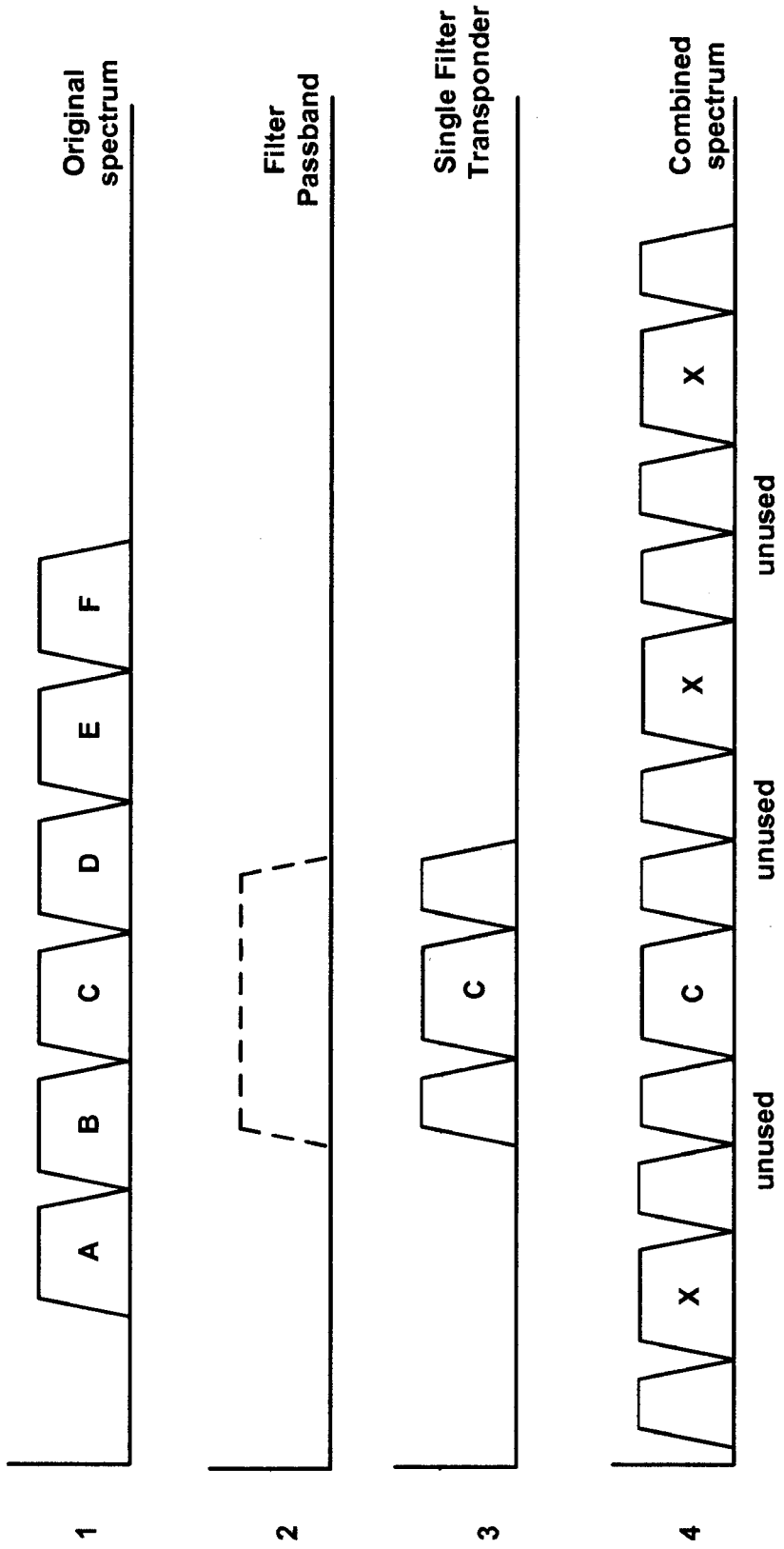
Original spectrum
Filter Passband
Single Filter Transponder
Combined spectrum
A
B
C
D
E
F
C
X
C
X
X
unused
unused
unused
1
2
3
4

FIG. 15

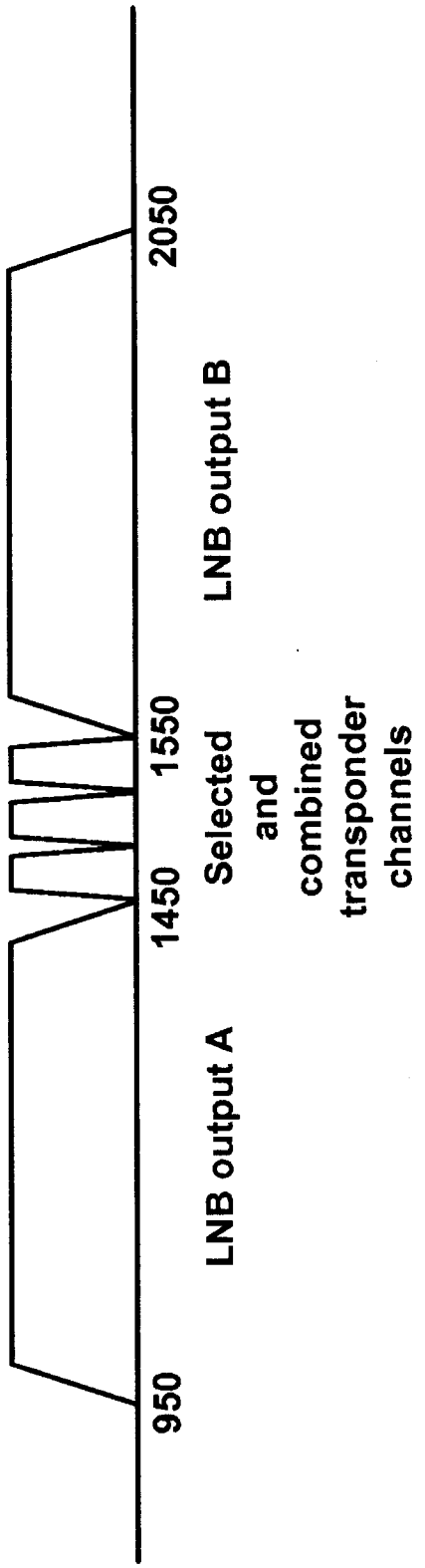
950
LNB output A
1450
Selected
and
combined
transponder
channels
1550
LNB output B
2050

FIG. 16

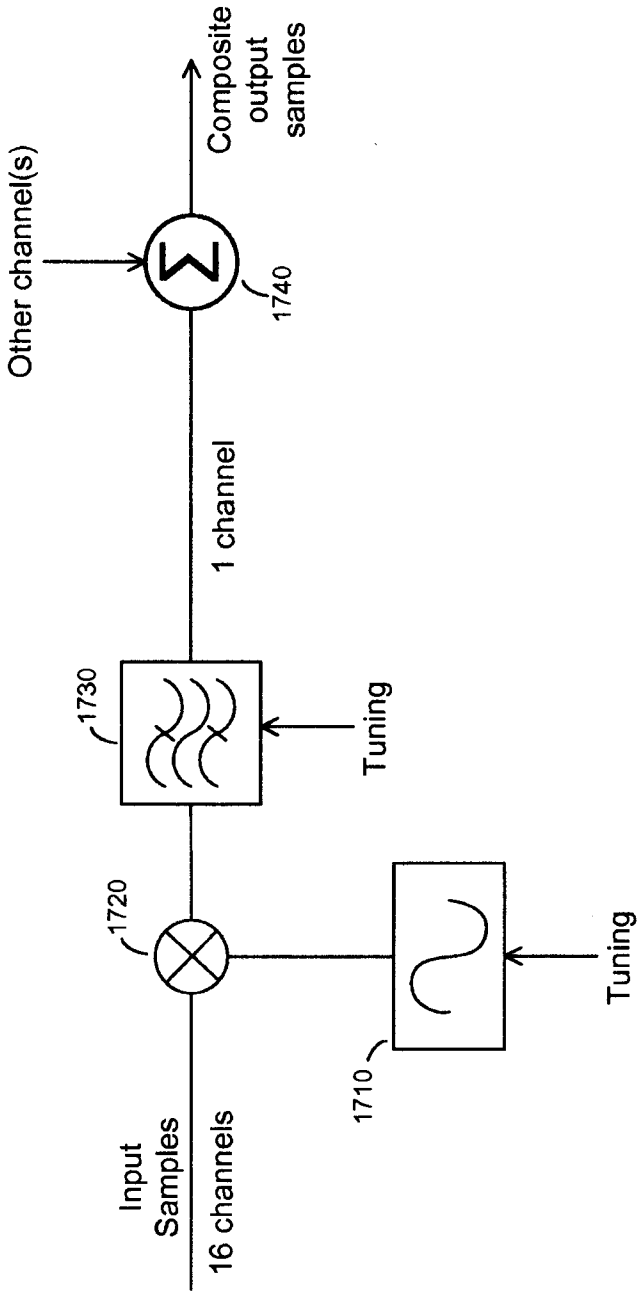

Digital Frequency translator and filter with summer

FIG. 17

SIGNAL SELECTOR AND COMBINER FOR BROADBAND CONTENT DISTRIBUTION

RELATED APPLICATIONS

This application claims priority to U.S. provisional patent application No. 60/345,965 filed Nov. 7, 2001 entitled "Signal Selector and Combiner for Broadband Content Distribution"; U.S. provisional patent application No. 60/333,722 filed Nov. 27, 2001 entitled "Signal Selector and Combiner for Broadband Content Distribution"; and U.S. provisional patent application No. 60/358,817 filed Feb. 22, 2002 entitled "Signal Selector and Combiner for Broadband Content Distribution", each of which is incorporated herein by reference.

BACKGROUND

Referring to FIG. **1**, a satellite receiver outdoor unit (ODU) **110** typically comprises a dish antenna **150**, one or more antenna feed horns **130**, one or more low noise amplifier and block down converters (LNB) **140**, and an optional multiport cross point switch **160**. Dish **150** collects and focuses received signal power onto antenna feed horns **130** which couples the signal to LNBs **140**. A single dish **150** may have multiple feed horns **130** wherein each feed receives a signal from a different satellite in orbit. An installation may have more than one dish, feed, and LNB assemblies. The cross point switch **160** allows connection of the outdoor unit **110** to more than one integrated receiver decoder (IRD) **180** located inside the building. IRDs are commonly called set top boxes (STBs) arising from their typical installed location on top of TV sets. The LNB **140** converts the signal transmitted by a satellite in Earth orbit, for example C band, Ku band, or another frequency band, to a lower intermediate frequency (IF) suitable for transmission through coax inside a building. For example, L band IF (950 to 1450 MHZ) with RG-6 or RG-11 coax cable is commonly used. The IRD **180** tunes one transponder channel, demodulates the IF signal from the LNB down to base band, provides channel selection, conditional access, decodes the digital data to produce a video signal, and generates an RF output to drive a television.

A satellite outdoor unit may have as many as three or more LNBs each with two receiving polarizations. The received polarization is selected by sending a voltage or other control signal to the LNB. In this configuration there are six possible 500 MHz signals that may be selected by the multiport cross point switch to be routed to each IRD. The 500 MHz signal is typically comprised of 16 transponder signals of 24 MHz bandwidth each with a guard band in between each transponder signal. Other transponder bandwidths are used such as 36 MHz, 54 MHz with a single channel or shared by two TV signals, and 43 MHz.

A problem with the conventional approach to connecting an outdoor unit to IRDs is that multiple cables are required to be run from the outdoor unit: one cable for each room where an IRD is located. When a new IRD is added another cable must be installed. In an application using a media server, a central processor for all video signals, multiple cables are needed to route signals from the ODU to the server.

FIG. **4** shows a representative spectrum of the signal output by an LNB. In a conventional satellite ODU this signal is routed through a cross point switch to one of the IRDs. Note that all transponder channels in the signal are from a single LNB and from the same polarization satellite signal. The cross point switch allows any of the cables connected from the ODU to the IRDs to be switched to any of the LNBs. A dedicated cable for each IRD is needed because in general each IRD is not using the same LNB and polarization at the same time. A server requires access to several LNB signals simultaneously, thus requiring several cables.

U.S. Pat. No. 6,134,419, incorporated herein by reference, by Williams assigned to Hughes Electronics, addresses part of the problem. The Williams patent recognizes that the bandwidth of the signal from each of the two polarizations is too broad to be transmitted over standard RG-6 or RG-59 cable, particularly when combined with the cable CATV signal. Williams addresses this problem using a transmodulator, by demodulating and remodulating to a different modulation scheme the RHCP and LHCP signals using a tuner, decoder, packetizer, cable encoder, and up converter for each of 32 transponder channels. The transmodulator outputs a signal with a higher-level modulation scheme to reduce the bandwidth occupied by the satellite signals. In the example provided, the QPSK signals from the LNBs are transmodulated to 128-QAM, reducing the bandwidth from 1000 MHz to 192 MHz. At the set top box (STB) the 128 QAM signal is demodulated and processed to produce an NTSC analog video signal sent to a television set.

One problem with the Williams approach is the circuit complexity due to the 32 tuner paths required in the transmodulator. For an increase in the number of satellite signals, this problem becomes more pronounced. Williams discloses modulation using 128-QAM, which requires a higher signal to noise ratio (SNR) than QPSK and is it more susceptible to impairment from multipath present in a cable environment.

U.S. Pat. No. 5,959,592 incorporated herein by reference, by Petruzzelli addresses combining both the left hand circular polarized (LHCP) and right hand circular polarized (RHCP) signals into one signal that is transmitted from the ODU. In the disclosed band stacking approach, the output of two low noise amplifiers (LNAs), each 500 MHz wide, are frequency translated to different IF frequencies and summed into a signal with a bandwidth of more than 1000 MHz. In one example disclosed, the different IF bands are 950 to 1450 MHz and 1550 to 2050 MHz. The problem with this approach is that the resulting bandwidth is very wide and becomes impractical when the number of LNB signals increases because each LNB output requires 500 MHz of bandwidth on the cable.

Satellite systems are described generally in G. E. Lewis, "Communication Services via Satellite" Butterworth-Heinemann Ltd. 1992.

SUMMARY OF THE INVENTION

A channel selecting and combining solution is used in the outdoor unit where one or more transponder channels are selected from each LNB output. The transponder channel or channels needed from each LNB are selected by a filter. Each selected transponder signal may be translated to a new channel frequency. The selected transponder channels are combined to form a composite signal. All of the selected, translated, and combined transponder channels are transmitted over a single cable to a gateway unit that extracts the channels to distribute to the IRDs. The gateway can frequency translate each transponder channel to its original frequency. Alternatively, the IRDs connect directly from the cable or through a splitter and tune the desired transponder channels. A channel translation mapping table is used to

coordinate the channel assignment between the original channels and new channels. In another alternative embodiment, the gateway transmits the video information over a digital data network.

LNB outputs can be sampled by a broadband A/D converter and filtered with a digital filter to select a transponder channel. Alternatively, a tuner can select a transponder channel. The selecting process extracts from the wide band LNB output a narrow band transponder channel.

Each IRD communicates the channels it needs to receive, directly or indirectly, to the signal selector. This information is used to select the transponder channel to combine in the signal selector output signal, the ODU downlink. New IRD designs can incorporate a signaling channel that uses unoccupied regions of the frequency spectrum of the cable, or a wireless communication link, to communicate the channel information. To provide compatibility with existing IRDs, the channel information can be communicated by an IR or RF auxiliary channel to the gateway or outdoor unit.

Many newer homes have coaxial cable installed that runs to a central location. In the present invention a gateway is located at the central location that receives the combined signal from the outdoor unit and distributes the signals to the IRDs. An IRD requests a channel through an IR or RF signal communicated to the gateway. The RF communication can be in the cable connecting the IRD to the gateway or a wired or wireless signal.

The present invention requires only one cable wire to be routed from the outdoor unit to inside the building or to a gateway. Additional IRDs can be added without any installation effort needed on the outdoor unit. In certain configurations the invention eliminates the cross point switch.

The present invention can be used along with other signals transmitted on the distribution cable. The combined transponder signal can occupy a predetermined region of the frequency spectrum while another service, such as CATV can occupy a different region. Another example of shared use of the cable is along with a single or band stacked satellite signal. In this example, frequencies such as 950–1450 and 1550–2050 are used by a conventional satellite system, and frequencies outside and between these frequency bands are occupied with a combined transponder signal according to the present invention.

BRIEF DESCRIPTION OF THE DRAWINGS

FIG. **1** Shows a prior art configuration of a satellite TV installation.

FIG. **2** shows a satellite TV installation according to the present invention.

FIG. **3** shows a block diagram of a selector and combiner according to the present invention.

FIG. **4** Shows a diagram of the frequency spectrum of individual LNB output signals according to the prior art.

FIG. **5** shows a diagram of the frequency spectrum of individual LNB output signals and the frequency spectrum of the composite RF signal comprising selected transponder signals in accordance with the present invention.

FIG. **6** shows an embodiment of the present invention wherein the sampled data is distributed digitally to channel selector filters.

FIG. **7** shows an embodiment of the present invention wherein the selected channel data is distributed digitally to the up converters.

FIG. **8** shows an embodiment of the present invention wherein the each LNB has a dedicated selector and up converter.

FIG. **9** shows an embodiment of the present invention wherein tuners and up converter are used to select and combine transponder channels.

FIG. **10** shows an embodiment wherein selected channel are processed by an MPEG transport stream demultiplexer and combined as data packets for digital LAN transmission.

FIG. **11** shows a satellite TV installation according to the present invention providing compatibility with existing installed STBs and new STBs and using a server/gateway.

FIG. **12** shows details of an outdoor unit providing compatibility with new and existing STBs.

FIG. **13** shows the frequency spectrum of signals at various points in the signal processing.

FIG. **14** shows the frequency spectrum of signals in another embodiment of the invention using base band processing.

FIG. **15** shows the frequency spectrum of signals filtered and combined with excess bandwidth.

FIG. **16** shows the frequency spectrum of conventional LNB signals combined with selected transponder channels in accordance with the present invention.

FIG. **17** shows one example of a frequency translator and filter.

DETAILED DESCRIPTION OF THE INVENTION

Referring to FIG. **2**, a satellite TV installation according to the present invention is shown. Signal selector **250**, part of satellite outdoor unit **210**, extracts the needed transponder channels from each of the LNB outputs and combines the channels into one composite signal transmitted on cable **220**. Gateway **230** receives the signals and provides distribution to the IRDs located in the building. Controller **255** is responsible for communicating channel map, control, and status information with gateway **230** and IRDs **240**. Controller **255** also tunes filters and local oscillators in the signal selector and maintains the channel map specifying the assigned frequency slots for transponder channels. Alternatively, the channel map can be maintained by gateway **230**.

Gateway **230** can be a simple power splitter/summer allowing the IRDs to connect directly to the cable. Gateway **230** would be located inside the home in a convenient location that allows connection to the IRDs **240**. Gateway **230** is designed to pass signaling from IRDs **240** to ODU **210** that contains the channel selection information.

Each LNB output signal is applied to a signal selector that extracts zero, one, or more transponder channels to be combined into a composite signal.

Refer to FIG. **3**. In an embodiment of the present invention, a quadrature down converter is used to produce I and Q analog signals. The down converter is comprised of a local oscillator **382**, phase splitter **384** to produce an in-phase and quadrature-phase LO, two mixers **310**, and two filters **320**. The filters **320** reject the undesired mixing products. The I and Q signals are sampled by high-speed broadband A/D converters **330** to create I and Q digital samples. The samples are N bits wide, where N is selected to limit the degradation to the signal to an acceptable level. The entire 500 MHz band is digitized by this operation. All further digital processing is done using complex operations applied to the I and Q digital samples. The sample rate is 500 MHz or higher.

The resolution of the A/D converters is in the range of 4 to 12 bits. To sample and reproduce a QPSK signal 6 to 8 bits would be adequate. More bandwidth efficient modulation

such as 8PSK would require more bits of resolution. The selection of resolution is based on considering power consumption, SNR, and cost.

A coherent LO generated by carrier tracking is not needed since the sampled data is not decoded in the ODU. An unknown carrier offset is present between the LO and the carrier of the received signal. A small additional carrier offset is introduced by the down conversion process but will be removed in the carrier recovery operation in the IRD. It is desirable that the LO carrier noise be low enough to be tracked out by the carrier loop in the IRD.

Digital filtering **340** is used to select one or more of the transponder output signals. The digital filter may operate by applying a band pass filter transfer function to the broadband signal to isolate a single transponder channel. The filter uses known digital architectures such as finite impulse response (FIR) or infinite impulse response (IIR). The filter is tuned by programming a set of filter coefficients to select a specific pass band. Frequency domain filter can also be employed using FFT or DFT architectures. Other filtering techniques include polyphase filter structure. These filtering techniques are well known in the digital signal processing field. References covering digital filtering include Thomas J. Cavicchi "Digital Signal Processing" John Wiley & Sons, 2000; Sanjit K. Mitra, "Digital Signal processing, a Computer Based Approach" McGraw-Hill, 2001; Proakis and Manolakis, "Introduction to Digital Signal Processing", Macmillan Publishing, 1988; DSP and applications, Analog Devices.

Referring again to FIG. **3**, the selected transponder channel is then frequency translated to a new carrier frequency. The selected and frequency translated digital signal is converted to an analog signal using a D/A converter for the I and Q components. One approach is to convert the digitally filtered signal to the analog domain using a D/A converter **350**, then using a quadrature modulator with mixers **360**, phase splitter **388**, LO **386**, and summer **380**. Alternatively, this can be done by a digital mixing operation where a rotating phasor is multiplied by the data samples to translate their frequency, then converting the frequency shifted digital signal to an analog signal with a D/A.

LO **386** is variable to allow the selected channel to be frequency translated to any of the channels available in the band. Alternatively, the LO can be fixed at different a frequency for each of the channel selectors.

Alternatively, a single transponder channel can be selected by translating the spectrum down in frequency to place the selected channel at base band then applying a low pass filter transfer function to isolate a single channel. The translation can be done by a digital mixing operation wherein the sample data is multiplied by a data sequence representing a carrier frequency. A post-mixing filter rejects the undesired mixing terms.

FIG. **14** shows the frequency spectrum of the signal as it is processed. The original spectrum **1** is frequency translated to locate the selected transponder channel at base band, as shown in spectrum **2**. A low pass filter then passes one transponder channel and removes signal information from the other transponder channels, shown in spectrum **3**. This signal is then converted to an analog signal, mixed to a new frequency, and summed with other channels in the analog domain.

One summer input is provided for each signal selectors. This is a broadband signal comprising up to 16 or 32 channels. Alternatively, a summer combines the analog I and Q signals from all the signal selectors.

Two basic approaches to combining are possible. One approach is to combine digitally filtered signals in the digital domain. This can be achieved with all filtered transponder channels to be combined presented at a sample rate equal to the composite output rate. The other approach is to combine the selected signals in the analog domain. This leads to two possible approaches to filtering. One is to implement filters with the same input and output sample rate. The other approach is to filter with an output sample rate that differs from the input sample rate.

An example of a digital combining embodiment, a 500 msps broadband sampling of the LNB output could be filtered to produce a 500 msps output stream representing one or more transponder channels. Each transponder channel may be frequency translated to the desired new carrier frequency, then filtered to produce a single transponder signal that can be combined with other similarly selected transponder channels.

FIG. **13** shows the frequency spectrum of a sample stream as it is processed. The original spectrum **1** is frequency translated to locate the selected transponder channel at the desired frequency, as shown in spectrum **2**. A band pass filter then passes one transponder channel and removes signal information from the other transponders channels, shown in spectrum **3**. This filtering operation selects one transponder. In this example transponder channel B is selected. The sample stream for the selected channel is added to the sample stream from other filtering sections, represented in spectrum **4**, to produce a composite sample stream in spectrum **5**. Other selected channels are represented by channels labeled X.

FIG. **17** shows a block diagram of the processing elements to perform these steps. Local oscillator (LO) **1710** feeds mixer **1720** and is then band pass filtered by filter. LO is variable to allow the selected channel to be frequency translated to any of the channels available in the band. Filter **1730** has a programmable pass band frequency, tuned by loading different filter coefficients. Summer **1740** adds the sample stream to other sample streams. Several transponder channels are selected, each requiring one input to an adder. One embodiment uses a two input adder for each filter channel to implement a pipeline adder. The time delay introduced by a pipeline adder does not present a problem to the system because the receivers are each demodulating one transponder and the relative time delay is not apparent.

The frequency translation can occur either before or after the filtering operation. An advantage to translating first followed by filtering is that the filter removes the unwanted mixing terms generated. In either case, a rotating phasor is multiplied by the data samples to translate their frequency.

An example of an analog-combining embodiment, the digital filters may have an output sample rate that differs from the input sample rate. This can be inherent in the filtering operation or result from a down sampling done after filtering. Down sampling after the selecting filter is possible because the single channel the bandwidth is narrower than the A/D output and fewer samples are needed to represent the signal.

The spectrum is placed at the desired RF frequency by choosing the LO frequency driving the up converters. One example would be 950 to 1450 MHz, a standard IF frequency for DBS systems. This frequency band is compatible with standard set top box (STB) hardware. Other IF frequencies could be used. Using this technique, standard STB hardware can receive the new composite signal and demodulate and decode the video and audio signals. Specific TV channels are located at new transponder frequencies. A

mapping table allows the IRD/STB to tune to the correct transponder channel. The bandwidth of the spectrum can be 500 MHz for a 16-transponder system, 1000 MHz for a 32-transponder system, or other bandwidths according to the number of transponder channels present on the cable. If the system uses band stacking, the A/D converter can directly sample the 1000 MHz IF signal, with or without a frequency translation, or the two LNB polarizations can be separated into two 500 MHz signals each digitized with separate A/D converters.

Alternatively, the IF signal from the LNB can be directly band pass sampled by a single A/D converter. The IF signal can be frequency translated to a different IF frequency before band pass sampling. Band pass sampling requires a higher speed A/D converter than base band sampling, but only a single A/D.

One pair of A/D converters is provided for each LNB output. Alternatively, the LNB output can be band pass sampled using a single A/D converter. At a given point in time some LNB outputs may not be accessed by a user. If no transponder channel is selected from a particular LNB output, the A/D converters associated with that LNB output may be switched off to reduce power consumption and heat generation, or reallocated to process another LNB output.

The A/D digitizes the entire LNB output signal; therefore all transponder channels are available in the sampled data. More than one transponder channel may be selected from the A/D data to be combined in the composite signal. When all A/D are powered up any combination of transponder channels from any LNB output can be combined into the composite signal for distribution to the gateway and STBs.

FIG. **5** shows a frequency spectrum of the composite signal. Each of the available channels can be occupied with any transponder channel of any polarization from any LNB. One or more channels are used by each active IRD connected to the system. The number of transponder channels in the composite signal can be from as few as 2 to as many as 32, depending on the number of simultaneous channels needed in the system.

In general, the selecting and combining process will result in transponder channels located at different frequencies than where originally found. A translation table maps original channel locations on the selector input to new channel locations on the selector output. This map created and maintained by a controller located in the ODU or the gateway and is communicated to the IRDs or other devices in the network.

The channel selector performs a frequency selective filtering operation to select the desired transponder frequency. The transition band of this filter is steep, passing the selected transponder channel and rejecting adjacent transponder channels. The transition region available is derived from the guard band between channels. This can be as small a few Mega-Hertz. If the LNB carrier offset is large, a shift in the spectrum will result in the selecting filter cutting off part of the desired spectrum and passing part of an adjacent channel. For this reason a carrier offset estimate is desirable. Since all transponder channels from a given LNB will have approximately the same offset, it is only necessary to monitor one transponder channel from each LNB to determine the offset for all channels. Any of several know techniques for estimating the carrier offset may be employed. One example is two use two filters each approximately half the transponder bandwidth. By measuring the ratio of power from each filter output, an estimate of the carrier offset can be determined. Once the carrier offset is estimated, the sampled signal can be multiplied by a rotating phasor value to digitally shift the spectrum back to the nominal position. Alternatively, this frequency offset correction can be done in the analog domain, or a combination of digital and analog approaches.

Another approach to addressing the unknown carrier offset in the LNB is to use a wider filter to select transponder channels, wherein the bandwidth of the filter passes the selected transponder and part of the adjacent spectrum. In this way, if the transponder signal is not centered in the filter bandwidth the band edges will not be attenuated by the filter roll off. This excess bandwidth will allow some energy from the neighboring transponder signals. A wider channel separation is needed on the combined signal, for example the selected transponders can be spaced twice the conventional spacing. This approach makes less efficient use of the cable spectrum but simplifies the hardware implementation by reducing the requirement of or eliminating the carrier offset correction. Additionally, a less steep filter roll off is possible.

FIG. **15** shows the signal spectrum as it is processed. Spectrum **1** is a representative original spectrum. Spectrum **2** shows the filter pass band characteristic, which is wider than one transponder channel. Spectrum **3** is the result of filtering one transponder channel. Spectrum **4** is a composite of several transponder channels. A region between the selected channels is unused. The exact shape of the unused spectrum will be dependent on the filter roll-off characteristics, but is not significant. The objective is to pass the selected transponder signal without distortion.

The approach of using a filter with excess bandwidth technique is also useful for implementing the invention using an analog approach. A filter with a stop band substantially wider than the transponder channel allow using filters with more gradual transition band, and is therefore simpler to implement. The excess bandwidth can range from less than 5% to 100% wider than the transponder bandwidth.

FIG. **6** shows a variation of the present invention that uses a cross point switch or shared bus **640** to distribute data from the A/Ds to the channel selecting filters. The cross point switch, also called crossbar switch, allows any signal input to be passed to any output. It can take the form of a data selector or multiplexer. Implemented as a shared bus, data sinks receive signals from data source using a time-multiplexed bus. Either a cross point switch or a shared bus can be unidirectional or bidirectional. The cross point principle applies to digital signals and analog signals. LNB outputs are quadrature down converted **620** and sampled by dual A/D converters **630**. The parallel data is routed through cross point switch **640** so that any filter has access to any A/D data. Filter/selector **650** selects the desired transponder channel that is then up converted by quadrature modulator **660**. All selected channels are combined in summer **670**.

FIG. **7** shows a variation where the cross point switch **740** is located after the selecting filter **720**. In this configuration the selecting filter **720** may also include a down sampler to reduce the bus traffic bandwidth in the cross point switch **740**. Down sampling is possible because after selecting a single desired channel the bandwidth is narrower and fewer samples are needed to represent the signal. One or more selecting filters **720** may be connected to the output of each A/D, each filter **720** selecting one transponder channel.

FIG. **8** shows a configuration wherein each LNB has a dedicated selecting filter and up converter. The selecting filter may digitally select multiple channels from the broadband A/D data to drive the up converter and DAC.

FIG. **9** shows another alternative where analog tuners **930** select desired transponder channels that are up converted by up converter **940**. All signals are combined by summer **950**

to drive the signal cable **970** from the ODU. A multiport switch **920** allows any tuner to connect to any LNB output. The number of signal selecting paths comprising tuner **930** and up converter **940** is selected based on the maximum number of simultaneous users. A multiple-tuner personal video recorder would use more than one signal. Controller **960** receives channel select information either from the cable or a separate data channel such as infrared (IR) or wireless RF link or other source. Channel select information from the controller **960** programs the tuner **930** and up converter **940** LO. Channel select information can come to the controller over a wireless remote control signal or using signaling sent over the cable.

Up converters **940** can operate at a fixed LO frequency with one up converter **940** being assigned to each user connected on the cable. The various LO frequencies are unique. Alternatively, the down conversion process of each tuner **930** can be set to down convert directly to a predetermined IF frequency which is unique for each selected signal, thereby eliminating a separate up converter. A simplified IRD can be used with this approach wherein the IRD needs only tune to a single selectable IF frequency. The tuning range is narrower than a convention 500 MHz tuner and the channel selection is limited to as few as four choices compared to up to 16 or more in a convention IRD tuner.

FIG. **10** shows another alternative where signal selector **1010** selects a transponder channel. MPEG transport stream demultiplexer **1020** extracts a specific video program that is combined by data combiner **1030**. Several MPEG streams are multiplexed as needed, and packets are formatted for transmission on a digital network. A digital LAN **1040** connects directly to the ODU. Channel information is communicated to the ODU through the LAN.

FIG. **11** shows another alternative used where new STBs are used with existing STBs. ODU **1110** supplies a signal to each of the connected cables according to the type of STB attached to the cable. Existing legacy STBs **1120** are supplied with an IF signal as in a conventional system, and the STBs **1120** will tune to a single transponder channel. New STBs **1140** will be supplied with a composite signal according to the present invention comprising all the transponder channels that are selected; the new STB **1140** will tune and decode the requested channel.

A new STB **1140** can be installed in place of an existing STB **1130** by simply connecting the new STB **1140** to the cable in place of the existing STB **1130**. More than one new STB **1140** can be installed by using a signal splitter **1150** to provide a signal to multiple STBs. New STBs use a signaling system for selecting transponder channels that passes through the splitter to the ODU. Existing STBs will each have a dedicated connection to the ODU, as provided in the original installation. This is required because existing STBs use voltages or other control means to select LNB outputs that do not support multiple STBs on a single cable.

Also in FIG. **11**, server/gateway **1160** receives the composite transponder signal, decodes specific programs, and distributes the program information in packetized MPEG over a digital local area network (LAN) **1170** to STBs **1180**. Ethernet or other LAN technology is suitable for this function.

A new STB operating in accordance with the present invention is provided with a means of communication with the signal selector and combiner in the ODU. At power up or at periodic intervals the ODU or the STB initiates communication over the attached cable. This communication can be an in band or out of band signal. The ODU polls the STBs connected to determine if the STB is a conventional STB or new design STB. Because conventional STBs will not respond to the polling request, the absence of response is an indication of a conventional STB. A new STB will respond to the polling request and establish communication with the ODU.

The means of communication on the cable can be a TDMA frame structure with slots assigned to each STB, a frequency division multiplex (FDM) approach with unique frequencies assigned to each STB, or any other known technique for two-way communication by multiple devices over a signal channel. An extension of DiSEqC protocol commonly used for satellite dish control can be used for this communication. DiSEqC uses a gated 22 kHz carrier to communicate binary data and can be adapted for use to transfer data needed. The data rates are low for this communication path. Device configuration, channel mapping, and channel requests are among the types of data communicated between the ODU and STB.

Referring to FIG. **12**, signal selector and combiner **1220** taps the signals output from each LNB to provide the transponder selection function. Switch **1220** is under control of the signal selector and combiner **1210**. Switch **1220** will be actuated to supply either a conventional signal from multiport switch **1260** or the composite transponder signal from signal selector and combiner **1210**. Switch **1220** can be a solid-state device or electromechanical relay.

Referring to FIG. **16**, another application of the present invention is to provide selected transponder signals along with other services transmitted on the same cable wiring. The selected transponder signals can be transmitted in unoccupied regions of the cable, such as above, below, or between broadband satellite signals. The number of transponder channels transmitted can be adapted to the available spectrum. In one example, 950 MHz to 1450 MHz is used by one conventional LNB output signal; 1550 MHz to 2050 MHz is used by another conventional LNB output, leaving 1450 MHz to 1550 MHz available. One or more selected transponder channels from any LNB can be inserted into this region. Suitable guard bands need to be provided to prevent interference, for example 3 transponder channels at 31.25 MHz spacing uses 93.75 MHz. Another example of this application is to combine a standard CATV signal occupying 50 to 750 MHz with selected satellite transponder channels that are combined and transmitted at frequencies above the CATV band.

Using the present invention, any number of transponder channels can be selected and combined. Conventional IRD tuners are designed to tune channels anywhere in a 500 MHz or 1000 MHz range, requiring a wide tuning range for the front-end filter and LO. In an application where few channels are needed, the tuner range can be narrower, thus simplifying the design and lower cost. For example, a residential installation may typically have four television sets, some tuning only one channel at a time; others tune two channels in the case of picture in picture (PIP) or personal video recorder (PVR). This application would require 4 to 8 channels be distributed in the house simultaneously. A tuner would be required to tune over a 125 MHz to 250 MHz range.

Several variations in architecture are possible using the present invention. At each stage in the signal path, alternatives are available for implementation. Specific functions can be implemented in the analog domain or digital domain. Dedicated resources can be provided for each possible connection, or a pool of resources can be used. Dedicated resources insure that the peak demand can be satisfied unconditionally, but leads to unused capacity. Pooling

enables a trunking efficiency to be realized and exploits statistical properties of usage to address most requirements.

A pool of A/D converters that can accept a signal from any LNB output through an RF crossbar switch. The number of simultaneous LNB signals that can be processed is limited to the number of A/D converters provided. Alternatively, dedicated A/D converters, one connected to each LNB output allows all LNBs to be processed if needed.

A pool of filter/selectors connected to a common bus, the pool size dictating the number of simultaneous transponder channels that can be selected. Alternatively, a predetermined number of filters can be attached to each A/D converter.

The filters/selectors can be grouped with each LNB or can be a common resource available to process any signal from any LNB. This choice trades off circuit complexity of implementing more filters with circuit complexity of routing LNB outputs through a crossbar switch.

Each of the operations of mixing, filtering, and combining can be done as an analog operation or digital operation.

Partitioning of functions can take a number of forms. The circuitry can be implemented in a monolithic integrated circuit (IC), a hybrid, discrete components, or a combination of technologies.

Another application of the present invention is to simplify upgrades to an existing system. A dual tuner STB that enables viewing and recording of two different channels requires two input cables to allow any combination of LNB signals to be received. A single cable input would be limited to viewing and recording two channels from the same LNB output. When the upgrade is performed, the installation of an additional cable is difficult. By selecting and combining the desired channels at the ODU a single cable can be used to transmit all channels. A re-map of channel locations occurs. A conventional dual tuner STB can be used with this approach by providing a splitter at the input to the STB that supplies the composite signal to both cable inputs. A software upgrade to the STB may be needed to support the channel re-mapping.

Other implementations for signal processing include: No cross point switch, digitize, digital filter select, frequency translate, RF combine; cross point switch, analog tuner select, frequency translate, RF combine; digitize, digital filter select, digital network combine; digitize, digital filter select, decode, MPEG stream over a network; digitize, digital filter select, decode, MPEG to analog, restack channels, RF combine. One skilled in the art will recognize that many variations are possible to implement the present invention of selecting signals and combining onto a signal cable.

Another property of the present invention is that the process of digitizing, selecting, and combining is modulation independent. Either a digital or analog selecting and combining approach can be designed to process any form of phase/amplitude modulation. Although the dominant modulation type in direct broadcast satellite systems is QPSK, alternatively BPSK, 8-PSK or multi-level QAM and PSK signals can be distributed in the same way.

What is claimed is:

1. A signal distribution system for distributing a plurality of low noise amplifier and block converter (LNB) signals from a satellite outdoor unit (ODU) over a coaxial cable to an integrated receiver decoder (IRD) comprising:

a signal selector that receives a plurality of broadband LNB signals comprising a plurality of transponder signals, the signal selector is responsive to transponder select information transmitted by an IRD and selects a plurality of transponder signals from at least one broadband LNB signal based on the transponder select information;

a frequency translator coupled to the signal selector that is capable of shifting the selected transponder signals to new carrier frequencies to produce RF signals; and

a signal combiner coupled to at least one frequency translator capable of combining at least two RF signals to produce a composite signal;

wherein the modulation of the composite signal is the same as the modulation of the broadband LNB signals and wherein the composite signal is transmitted on the coaxial cable;

whereby the composite signal is transmitted to the IRD.

2. The signal distribution system of claim **1** further comprising a plurality of IRDs and wherein the composite signal is transmitted on a single cable connected to the ODU and all IRDs receive channels extracted from the composite signal.

3. The signal distribution system of claim **1** wherein the signal selector comprises an analog to digital converter and a digital filter.

4. The signal distribution system of claim **1** wherein the signal selector comprises a tuner.

5. The signal distribution system of claim **1** further comprising an integrated receiver decoder (IRD) connected to the coaxial cable with a plurality of tuners within the IRD, wherein each tuner within the IRD receives the composite signal and each tuner uses at least one transponder signal.

6. The signal distribution system of claim **1** wherein transponder select information is transmitted over the same cable as the composite signal.

7. The signal distribution system of claim **1** wherein transponder select information is transmitted over a wireless link.

8. A signal distribution system for distributing signals comprising a plurality of channels from a plurality of sources between a first unit and a second unit over a communication medium comprising:

means in the first unit responsive to information transmitted by the second unit for extracting selected channels from each of the plurality of sources and combining the selected channels into a composite signal without demodulating channels and without changing the modulation of the channels and transmitting the composite signal over the medium; and

means in the second unit for receiving the composite signal and demodulating and decoding at least one channel; and

means in the first unit and second units for bi-directionally communicating control information between the second unit and the first unit.

9. The signal distribution system of claim **8** wherein the control information comprises channel selection requests originating from the second unit and the control information comprises channel mapping information originating from the first unit.

10. The signal distribution system of claim **8**, further comprising a means in the first unit for carrier offset correction.

11. The signal distribution system of claim **8** wherein the first unit is a satellite outdoor unit and the second unit is a satellite integrated receiver decoder unit.

12. The signal distribution system of claim **11** wherein the communication medium consists of a single coaxial cable connected to the satellite outdoor unit.

13. The signal distribution system of claim 12 wherein the means for communicating uses the same communication medium as the composite signal.

14. A method of communicating a plurality of transponder signals from a satellite outdoor unit (ODU) that receives a plurality of satellite broadband signals to an integrated receiver decoder (IRD) over a single cable connected to the ODU, the method comprising the steps of:

communicating a transponder request signal to the ODU from the IRD;

in the ODU, selecting a plurality of transponder signals extracted from the received satellite broadband signals, wherein the selecting is responsive to the transponder request signals;

combining selected transponder signals into a composite signal;

transmitting the composite signal over the single cable from the ODU to the IRDs, wherein the modulation of the transponder signal is not altered by the steps of selecting, combining, and transmitting.

15. The method of claim 14 wherein the step of selecting a transponder signal comprises the step of: filtering a transponder signal with a band pass filter having a bandwidth ranging from 5% to 100% wider than the bandwidth of the transponder signal.

16. The method of claim 14 wherein the step of combining comprises frequency translating the selected transponder channels to a variable frequency before combining.

17. The method of claim 15 further comprising frequency translating the selected transponder channels to a predetermined frequency before combining.

18. The method of claim 14 further comprising the step of splitting the composite signal inside a home and distributing to a plurality of IRDs.

19. The method of claim 14 wherein the transponder request signal is transmitted over the cable from an IRD and all IRDs receive the same composite signal.

20. The method of claim 14 wherein the transponder request signal is transmitted over a wireless link to the ODU.

21. The method of claim 14 further comprising the steps of:

frequency translating the selected transponder channels to a variable frequency before combining; and

splitting the composite signal inside a home and distributing to a plurality of IRDs.

22. The method of claim 21 wherein the transponder request signal is transmitted over the cable from an IRD.

23. The method of claim 21 wherein the transponder request signal is transmitted over a wireless link to the ODU.

* * * * *

US007130576C1

(12) EX PARTE REEXAMINATION CERTIFICATE (6993rd)

United States Patent

Gurantz et al.

(10) Number: US 7,130,576 C1

(45) Certificate Issued: Aug. 11, 2009

(54) **SIGNAL SELECTOR AND COMBINER FOR BROADBAND CONTENT DISTRIBUTION**

(75) Inventors: **Itzhak Gurantz**, San Diego, CA (US); **Ladd El Wardani**, La Jolla, CA (US); **Michael Landry**, San Diego, CA (US)

(73) Assignee: **Entropic Communications Inc.**, San Diego, CA (US)

Reexamination Request:
No. 90/008,389, Feb. 6, 2007

Reexamination Certificate for:

Patent No.:	**7,130,576**
Issued:	**Oct. 31, 2006**
Appl. No.:	**10/289,011**
Filed:	**Nov. 6, 2002**

Related U.S. Application Data

(60) Provisional application No. 60/345,965, filed on Nov. 7, 2001, provisional application No. 60/333,722, filed on Nov. 27, 2001, and provisional application No. 60/358,817, filed on Feb. 22, 2002.

(51) **Int. Cl.**
H04H 1/00 (2006.01)

(52) **U.S. Cl.** **455/3.02**; 455/3.01; 455/3.04; 455/427; 725/71; 725/78

(58) **Field of Classification Search** 455/3.02
See application file for complete search history.

(56) **References Cited**

U.S. PATENT DOCUMENTS

5,278,837	A	1/1994	Kelley
5,285,284	A	2/1994	Takashima et al.
5,654,774	A	8/1997	Pugel et al.
5,703,390	A	12/1997	Itoh
6,005,861	A	12/1999	Humpleman
6,353,463	B1	3/2002	Seo
6,437,837	B1	8/2002	Seo

FOREIGN PATENT DOCUMENTS

EP	0757489	2/1997
EP	1009113	6/2000

OTHER PUBLICATIONS

Eutelstat, "Information for Installers of Hot Bird tm DVB–S Systems, Version 1.0" http://www.eutelstat.com/docs/tech, Jun. 7, 1999.

Eutelstat, Digital Satellite Equipment Control (DiSEqC TM) "Update and Recommendation for Implementation, Version 2.0" http://www.eutelstat.org/press/tv_recept1/html#DiSEqC, Apr. 18, 1997.

A.Y. Kwentus, et al. "A Single Chip Universal Digital Satellite Receiver with 480–Mhz IF Input" IEEE Journal of Solid–State Circuits, vol. 34, No. 11, Nov. 1999, pp. 1634–1646.

Philips Semiconductors–Integrated Circuits "Data Sheet for UAA3203M Frequency Shift Keying Receiver" Preliminary specification, Aug. 12, 1997, www.datasheetcatalog.com.

Thomson Consumer Electronics "RCA DirectTV Receiver with UltimateTV Service Setup Guide" WebTV Networks, Inc. 2000.

Primary Examiner—Fred Ferris

(57) **ABSTRACT**

In a satellite receiving system, program channels are selected from one or more broadband signals and combined with other selected channels and transmitted from a first unit, for example an outdoor unit, to a second unit, for example a gateway, server, or set-top box, using a single cable. Channels can be selected by digitizing the broadband signal then digitally filtering to isolate the desired channels. The outputs of several LNBs can be selected and combined into one signal. Multiple set-top boxes can receive independent signals over a single cable from the outdoor unit.

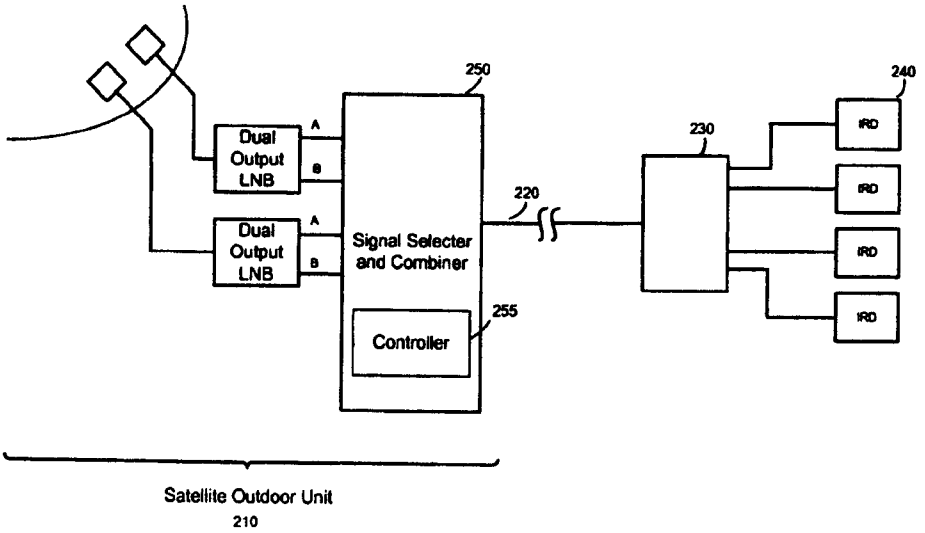

EX PARTE REEXAMINATION CERTIFICATE ISSUED UNDER 35 U.S.C. 307

THE PATENT IS HEREBY AMENDED AS INDICATED BELOW.

Matter enclosed in heavy brackets [ ] appeared in the patent, but has been deleted and is no longer a part of the patent; matter printed in italics indicates additions made to the patent.

AS A RESULT OF REEXAMINATION, IT HAS BEEN DETERMINED THAT:

Claims **1**, **8**, **14**, **15**, **16** and **17** are determined to be patentable as amended.

Claims **2–7**, **9–13** and **18–23**, dependent on an amended claim, are determined to be patentable.

New claims **24–42** are added and determined to be patentable.

1. A signal distribution system for distributing a plurality of low noise amplifier and block converter (LNB) signals from a satellite outdoor unit (ODU) over a coaxial cable to an integrated receiver decoder (IRD) comprising:

a signal selector that receives a plurality of broadband LNB signals comprising a plurality of transponder signals *and digitizes the received broadband LNB signals*, the signal selector is responsive to transponder select information transmitted by an IRD and selects a plurality of transponder signals *in the digital domain* from at least one broadband LNB signal based on the transponder select information;

a frequency translator coupled to the signal selector that is [capable of shifting] *configured to shift* the selected transponder signals to new carrier frequencies *and a converter configured to convert the shifted selected transponder signals* to produce RF signals; and

a signal combiner *communicatively* coupled to at least one frequency translator [capable of combining], *the combiner configured to combine* at least two *of the shifted selected* RF signals to produce a composite signal;

wherein the modulation of the composite signal is the same as the modulation of the broadband LNB signals and wherein the composite signal is transmitted on the coaxial cable;

whereby the composite signal is transmitted to the IRD.

8. A signal distribution system for distributing signals comprising a plurality of *satellite transponder* channels *of a broadband signal* from a plurality of sources between a first unit and a second unit over a communication medium comprising:

means in the first unit for digitizing the broadband signal from each of the plurality of sources;

means in the first unit responsive to information transmitted by the second unit for extracting selected channels from [each of the plurality of sources] *the digitized broadband signals in the digital domain;* and

means in the first unit for combining the selected channels into a composite signal without demodulating channels and without changing the modulation of the channels and transmitting the composite signal over the medium; and

means in the second unit for receiving the composite signal and demodulating and decoding at least one channel; and

means in the first unit and second units for bi-directionally communicating control information between the second unit and the first unit.

14. A method of communicating a plurality of transponder signals from a satellite outdoor unit (ODU) that receives a plurality of satellite broadband signals to an integrated receiver decoder (IRD) over a single cable connected to the ODU, the method comprising the steps of:

communicating a transponder request to the ODU from the IRD;

in the ODU, *digitizing the plurality of satellite broadband signals,* selecting *and extracting* a plurality of transponder signals [extracted] from the received *digitized* satellite broadband signals, wherein the selecting is responsive to the transponder request signals;

combining *extracted* selected transponder signals into a composite signal;

transmitting the composite signal over the single cable from the ODU to the IRDs, wherein the modulation of the transponder signal is not altered by the steps of selecting, combining, and transmitting.

15. The method of claim **14** wherein the step of selecting *and extracting* a transponder signal comprises the step of: filtering a transponder signal with a band pass filter having a bandwidth ranging from 5% to 100% wider than the bandwidth of the transponder signal.

16. The method of claim **14** wherein the step of combining comprises frequency translating the selected *and extracted* transponder channels to a variable frequency before combining.

17. The method of claim **15**, further comprising frequency translating the selected transponder channels to a predetermined frequency before combining.

24. The signal distribution system of claim 1, wherein the signal selector comprises a digital filter configured to apply a pass band filter transfer function to the digitized broadband signal to isolate a transponder channel.

25. The signal distribution system of claim 1, wherein the converter comprises a digital-to-analog converter configured to convert the selected and frequency translated signal to an analog signal prior to combining.

26. The signal distribution system of claim 1, wherein the frequency translator comprises a digital mixer configured to apply a rotating phasor to the data samples to translate their frequency.

27. The signal distribution system of claim 1, wherein shifting a selected transponder signal to a new carrier frequency comprises translating the original digitized broadband signal to locate a selected transponder channel at baseband.

28. The signal distribution system of claim 1, wherein the channels combined in the composite signal are combined at a sample rate substantially equal to the composite output rate.

29. The signal distribution system of claim 1, further comprising a controller to control the signal selector, frequency translator and converter and combiner.

30. The signal distribution system of claim 29, wherein the controller, signal selector, frequency translator and combiner are part of a satellite outdoor unit.

31. The signal distribution system of claim 29, further comprising a channel translation table maintained by the controller and specifying assigned frequency slots for transponder channels in the composite signal.

32. The signal distribution system of claim 31, wherein the channel translation table is provided to the IRD to allow the IRD to tune to a desired selected translated transponder channel.

33. The signal distribution system of claim 1, wherein the new carrier frequencies to which the selected transponder channels are shifted is determined such that the translated channels are placed at respective center frequencies where they will be positioned in the composite signal.

34. The method of claim 14, wherein selecting and extracting comprises applying a pass band filter transfer function to the digitized broadband signal.

35. The method of claim 14, further comprising converting the selected signal to an analog signal using a digital to analog converter prior to combining.

36. The method of claim 14, wherein the combining is performed in the digital domain.

37. The method of claim 17, wherein frequency translating comprises using a digital mixer to apply a rotating phasor to the data samples to translate their frequency.

38. The method of claim 14, further comprising frequency translating the digitized broadband signal prior to selecting and extracting transponder signal.

39. The method of claim 38, wherein frequency translating comprises translating the original digitized broadband signal to locate a selected transponder channel at baseband.

40. The method of claim 14, further comprising maintaining a channel translation table at the outdoor unit, the channel translation table specifying assigned frequency slots for transponder channels in the composite signal.

41. The method of claim 38, further comprising providing the channel translation table to the IRD to allow the IRD to tune to a desired selected translated transponder channel.

42. The method of claim 14, wherein selecting and extracting comprises low-pass filtering the translated digitized broadband signal thereby substantially removing signal information from non-selected transponder channels.

* * * * *