Trials@uspto.gov
571-272-7822

Paper 45
Date: October 6, 2025

UNITED STATES PATENT AND TRADEMARK OFFICE

BEFORE THE PATENT TRIAL AND APPEAL BOARD

COMCAST CABLE COMMUNICATIONS, LLC,
Petitioner,

v.

ENTROPIC COMMUNICATIONS, LLC,
Patent Owner.

IPR2024-00432
Patent 9,210,362 B2

Before MICHELLE N. WORMMEESTER, JON M. JURGOVAN, and FREDERICK C. LANEY, *Administrative Patent Judges*.

LANEY, *Administrative Patent Judge*.

JUDGMENT
Final Written Decision
Determining All Challenged Claims Unpatentable
35 U.S.C. § 318(a)

I. INTRODUCTION

Comcast Cable Communications, LLC ("Petitioner") filed a Petition (Paper 2, "Pet.") requesting *inter partes* review of claims 1–20 of U.S. Patent No. 9,210,362 B2 (Ex. 1001, "the '362 patent"). Entropic Communications, LLC ("Patent Owner") filed a Preliminary Response (Paper 10). Pursuant to 35 U.S.C. § 314, we instituted an *inter partes* review of all challenged claims based on all asserted challenges in the Petition. Paper 13 ("Inst. Dec."). Thereafter, Patent Owner filed a Response (Paper 24, "PO Resp.") to the Petition, Petitioner filed a Reply (Paper 28, "Pet. Reply"), and Patent Owner filed a Sur-reply (Paper 33, "PO Sur-reply"). On July 18, 2025, we conducted an oral hearing. A copy of the transcript (Paper 42) is in the record.

We have jurisdiction under 35 U.S.C. § 6(b). This Final Written Decision is issued pursuant to 35 U.S.C. § 318(a). For the reasons that follow, we determine that Petitioner has shown by a preponderance of the evidence that claims 1–20 of the '362 patent are unpatentable.

II. BACKGROUND

A. Related Proceedings

The parties identify various federal district court cases and petitions for *inter partes* review. *See* Pet. viii–ix; Paper 4, 1–4 (Patent Owner's Mandatory Notices); Paper 22, 1 (Patent Owner's Third Updated Mandatory Notices).

B. The '362 Patent

The '362 patent, titled "Wideband Tuner Architecture," relates to "wideband receiver systems and methods having a wideband receiver that is capable of receiving multiple radio frequency channels located in a broad

radio frequency spectrum." Ex. 1001, code (54), 1:15–18.

The '362 patent states that "[r]eceivers used to down-convert and selectively filter TV channels are referred to as tuners, and tuners designed to concurrently receive several TV channels are referred to as wideband tuners." Ex. 1001, 1:24–27. The '362 patent notes that "[i]n certain applications such as DVR and picture-in-picture, the receiver system may have to concurrently receive several desired channels that may or may not be contiguous," and that "[t]he wideband receiver requirement poses a trade-off to the system to limit either the dynamic range of the wideband tuner or reduce the bandwidth covered by the tuner so that fewer channels may be received and processed by the demodulator." *Id.* at 1:38–45. According to the '362 patent, a wide bandwidth receiver may involve "very expensive digital processing circuitry such as very high-speed analog to digital conversion and high-speed processor in the demodulator." *Id.* at 2:20–23. The '362 patent states that "[i]t is desirable to have wideband receiver systems that can increase the dynamic range without requiring expensive data conversion, filtering and channel selection at the demodulator." *Id.* at 2:24–27.

Figure 2, reproduced below, shows "a schematic block diagram of a wideband receiver system 200." Ex. 1001, 4:16–17.

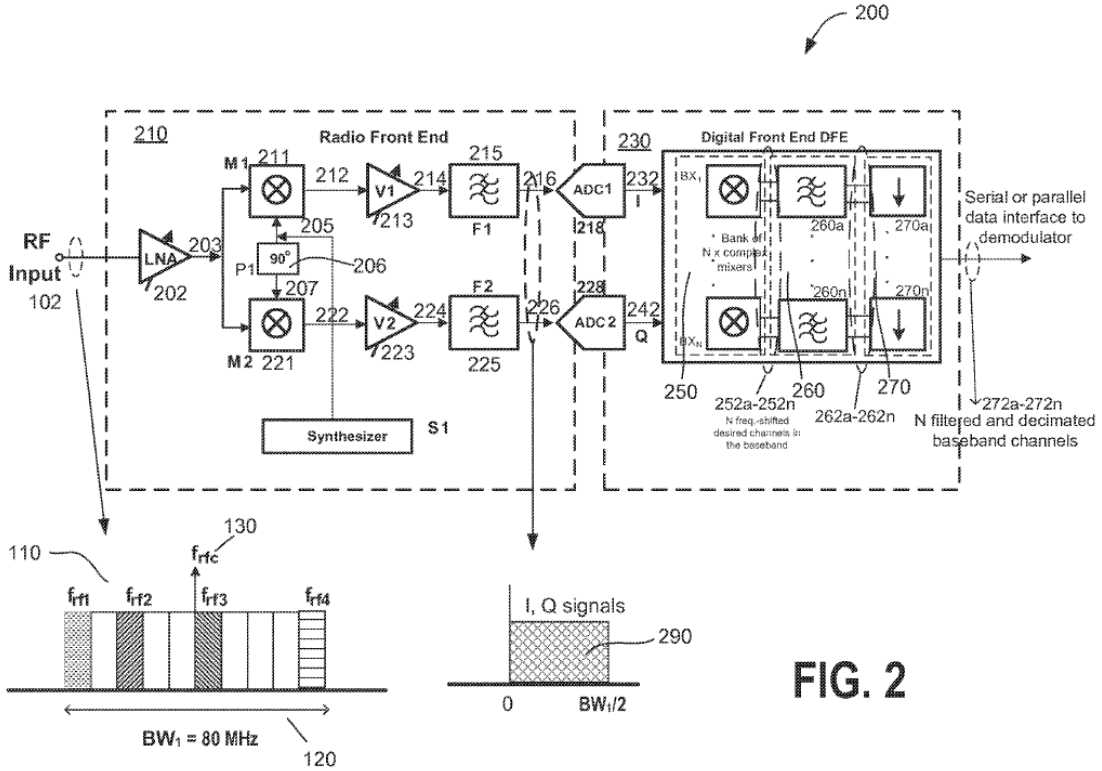

FIG. 2

As shown in Figure 2, "[w]ideband receiver system 200 includes a radio front end 210 and a digital front end 230." Ex. 1001, 4:18–19. The '362 patent states that "[r]adio front end 210 may be a single very wideband tuner receiver that captures the desired swath of channels located in non-contiguous portions of the spectrum having a frequency bandwidth BW1 120." *Id.* at 4:19–22. The '362 patent indicates that each of mixers 211 and 221 "multiplies (mixes) an amplified RF signal 203 with a respective first oscillator frequency signal 205 and a second oscillator frequency signal 207 to generate an in-phase signal 212 and a quadrature signal 222 that have a phase shift of 90° degree between them." *Id.* at 4:41–46. The '362 patent indicates further that "[i]n-phase signal 212 and quadrature signal 222 are further amplified and filtered by respective amplifiers V1 213, V2 223 and filters F1 215, F2 225 to generate a filtered in-phase signal 216 and a filtered quadrature signal 226." *Id.* at 4:64–67.

The ’362 patent states that “ADC1 218 generates a digital signal I 232 that is a digital representation of the analog filtered signal 216; ADC2 228 generates a digital signal Q 242 that is a digital representation of the analog filtered signal 226.” *Id.* at 5:28–31.

In addition, the ’362 patent states that “[d]igital signals I 232 and Q 242 are . . . applied to a bank of N complex mixers 250,” and “[e]ach of the N complex mixers 250 receives the digital signals I 232 and Q 242 from ADCs 218 and 228 to extract a different one of the desired channels and frequency-shifts the extracted signals to the baseband frequency.” Ex. 1001, 5:31–32, 5:49–52. The ’362 patent states further that “[e]ach of the frequency shifted desired channels 252 is filtered by an associated filter module (identified as 260a to 260n).” *Id.* at 5:52–54. The ’362 patent states that in an embodiment, “each of the filtered signals 260a to 260n may be sent directly to an associated demodulator (identified as 270a to 270n) for extracting the original information transmitted in the associated desired channel,” and that in another embodiment, “each of the filtered signals 262a to 262n is further decimated before providing to a demodulator.” *Id.* at 5:55–60. The ’362 patent further states that “baseband channels . . . sent as a serial or parallel digital data stream to a demodulator using a serial or parallel data interface according to commonly known methods.” *Id.* at 6:55–58.

C. Illustrative Claim

Petitioner challenges claims 1–20 of the ’362 patent. Claims 1 and 11 are independent. Claim 1 is reproduced below, which has been annotated using the same designations as the parties for each element.

[1A] A method for receiving a television (TV) signal comprising:

[1B] a mixer module configured to downconvert a plurality of frequencies that comprises a plurality of desired television channels and a plurality of undesired television channels;

[1C] a wideband analog-to-digital converter (ADC) module configured to digitize said plurality of frequencies comprising said plurality of desired television channels and said plurality of undesired television channels;

[1D] *digital circuitry configured to:*
select said plurality of desired television channels from said digitized plurality of frequencies; and output said selected plurality of television channels to a demodulator as a digital datastream.

Ex. 1001, 11:52–65 (emphasis added to highlight the limitation at the center of the dispute between the parties).

D. Asserted Grounds

Petitioner asserts the following eight grounds challenging the patentability of claims 1–20 in the ’362 patent. Pet. 18, 23–77. We instituted *inter partes* review on each challenge. Inst. Dec. 20.

Claim(s) Challenged	35 U.S.C. §	Reference(s)/Basis
1–3, 8, 9, 11–13, 18, 19	102[1]	Zhang[2]
1–3, 8, 9, 11–13, 18, 19	103(a)	Zhang
2, 3, 12, 13	103(a)	Zhang, Panday[3]

[1] The Leahy-Smith America Invents Act (“AIA”), Pub. L. No. 112-29, 125 Stat. 284 (2011), amended 35 U.S.C. §§ 102 and 103, effective March 16, 2013. Because the application from which the ’206 patent issued claims priority to an application filed before this date, the pre-AIA versions of §§ 102 and 103 apply.
[2] Zhang et al., U.S. Publ’n No. 2003/0056221 A1, published Mar. 20, 2003 (Ex. 1013).
[3] Pandey et al., U.S. Patent No. 7,237,214 B1, issued June 26, 2007

Claim(s) Challenged	35 U.S.C. §	Reference(s)/Basis
4–6, 14–16[4]	103(a)	Zhang, Mirabbasi[5]
7, 17	103(a)	Zhang, Mirabbasi, Karabinis[6]
10, 20	103(a)	Zhang, Jensen[7]
2, 3	103(a)	Zhang, Mirabbasi, Pandey
10	103(a)	Zhang, Mirabbasi, Jensen

In support of its challenges, Petitioner relies on a Declaration of David B. Lett (Ex. 1002) and a Reply Declaration of David B. Lett (Ex. 1078). Patent Owner relies on a Declaration of Samuel H. Russ, Ph.D. (Ex. 2009). Transcripts of the depositions of Mr. Lett (Ex. 2018, Ex. 2019, Ex. 2021) and Dr. Russ (Ex. 1079) also are in the record.

III. DISCUSSION

As shown in the asserted grounds table above, each of Petitioner's challenges to the patentability of claims 1–20 depends on Zhang, either alone or as combined with Pandey, Mirabbasi, Karabinis, and/or Jensen. *See* Pet. 18, 23–77. In all of the grounds, through independent claims 1 and 11, Petitioner relies exclusively on Zhang to disclose or suggest the recited elements of limitation 1D. *Id.* at 28–36, 42; *see also id.* 23–77. Rather than

---

(Ex. 1014).

[4] In the grounds chart Petitioner provides on page 18 of the Petition, Petitioner identifies claims 1–6, 8, 9, and 14–16 for this ground. But in the body of the Petition, at pages 48–60, Petitioner only addresses claims 4–6 and 14–16. Therefore, we view the grounds chart as having a typographical error.

[5] Mirabbasi et al., Classical and Modern Receiver Architectures, in IEEE Communications Magazine, 132–139, Nov. 2000 Vol. 38 No. 11 (Ex. 1018).

[6] Karabinis, U.S. Publ'n No. 2006/0233147 A1, published Oct. 19, 2006 (Ex. 1020).

[7] Jensen et al., U.S. Publ'n No. 2007/0027943 A1, published Feb. 1, 2007 (Ex. 1026).

addressing each of the asserted grounds individually, Patent Owner addresses all of the grounds collectively and only disputes whether Petitioner has demonstrated sufficiently that Zhang discloses or suggests limitation 1D in independent claim 1, which also applies to the corresponding limitation found in independent claim 11. *See* PO Resp. 7–35; PO Sur-reply 2–28. Notably, Patent Owner does not present any other arguments disputing Petitioner's contentions that Zhang, either alone or as combined with Pandey, Mirabbasi, Karabinis, and/or Jensen, show claims 1–20 are unpatentable. *See id.* For the reasons discussed below, Petitioner's contentions are persuasive and supported by a preponderance of the evidence.

A. Claim Construction

In an *inter partes* review proceeding, we construe a claim of a patent "using the same claim construction standard that would be used to construe the claim in a civil action under 35 U.S.C. 282(b)." *See* 37 C.F.R. § 42.100(b). That standard involves construing claims in accordance with the ordinary and customary meaning of such claims as would have been understood by a person of ordinary skill in the art ("POSITA") and the prosecution history pertaining to the patent. *See id.*; *Phillips v. AWH Corp.*, 415 F.3d 1303, 1312–14 (Fed. Cir. 2005) (en banc).

Petitioner asserts that "[a]ll claim terms herein should be given their ordinary and customary meaning to a POSITA." Pet. 21. Although Petitioner proposes corresponding structure for the term "digital circuitry" recited in claim 1, it does so only "[t]o the extent" that term "is construed to be a means-plus-function term under 35 U.S.C. 112, paragraph 6." *Id.* at 22. But Petitioner does not argue or suggest that "digital circuitry" *should be*

construed as a means-plus-function term; nor does Petitioner make an argument to overcome the presumption that 35 U.S.C. § 112, paragraph 6, does not apply. *See id.* Patent Owner does not address claim construction. *See generally* PO Resp. Because neither party actually argues "digital circuitry" is a means-plus-function term, the presumption holds and we determine that no claim term requires express interpretation to resolve any controversy in this proceeding. *See Vivid Techs., Inc. v. Am. Sci. & Eng'g, Inc.*, 200 F.3d 795, 803 (Fed. Cir. 1999).

B. Asserted Challenges Based on Zhang Alone

Petitioner asserts that claims 1–3, 8, 9, 11–13, 18, and 19 of the '362 patent are anticipated by Zhang. Pet. 23–42. Petitioner also asserts that these claims would have been obvious over Zhang. *Id.* As noted above, Patent Owner only disputes whether Zhang discloses or suggests the subject matter of limitation 1D. PO Resp. 1–35. As explained below, Petitioner has demonstrated by a preponderance of the evidence that claims 1–3, 8, 9, 11–13, 18, and 19 are anticipated by Zhang or would have been obvious over Zhang.

Before addressing the parties' arguments, however, we first provide an overview of Zhang.

1. Overview of Zhang

Zhang relates to "digital multi-channel demodulation circuits." Ex. 1013, code (57). Zhang indicates these circuits may be employed in "advanced wide-band frontends for digital set-top boxes, PVRs, home gateways and home media centers." *Id.* ¶ 45. Zhang further teaches "a digital selector that receives . . . separate RF channels and selects one or more RF channels, and a plurality of demodulators that receive one or more of the RF channels from

the digital selector and demodulate one or more of the RF channels." *Id.* ¶ 11.

Figure 2, reproduced below, shows a "a simplified high-level block diagram of an exemplary multi-channel demodulator 200." Ex. 1013 ¶ 23.

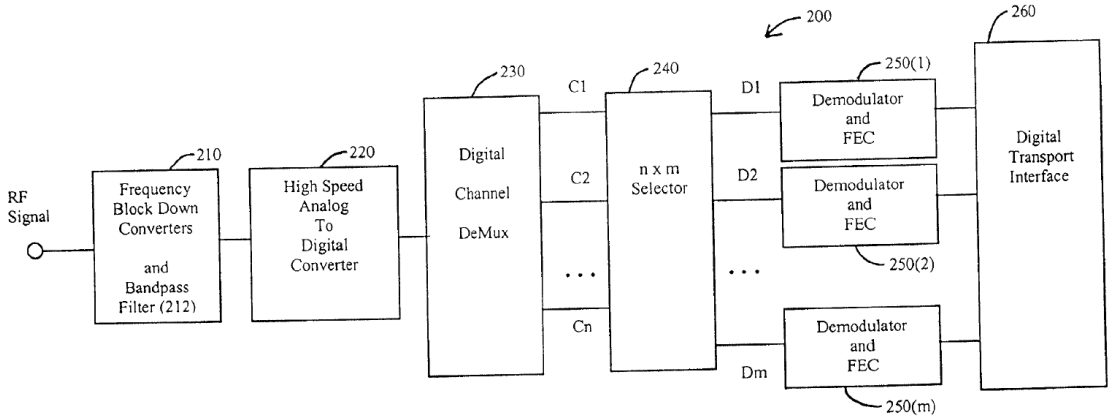

Fig. 2

As shown in Figure 2, demodulator 200 includes a "frequency-block down-converter 210 [that] receives one or more multi-channel analog RF signals" and "shifts the multi-channel analog RF signal to a lower frequency band." *Id.* ¶¶ 23, 25. Demodulator 200 further includes an ADC 220 that "converts the down-converted multi-channel analog RF signal to a multi-channel digital RF signal." *Id.* ¶ 27. Demodulator 200 further includes a "digital channel demultiplexer 230 [that] demultiplexes the multi-channel digital RF signal into separate digital RF channels C_1 to C_n" and a "digital selector 240 [that] receives the demultiplexed digital RF channels C_1 to C_n, and then selects one or more of the RF channels D_1 to D_m from one or more of the digital RF channels C_1 to C_n." *Id.* ¶ 28. According to Zhang, "[t]he m selected RF channels are then fed into respective demodulators 250(1), 250(2), . . . 250(m)." *Id.* ¶ 29.

Figure 3, reproduced below, shows a "simplified high-level schematic

diagram of a digital tuner 300, which . . . can be used to implement digital channel demultiplexer 230." Ex. 1013 ¶ 30.

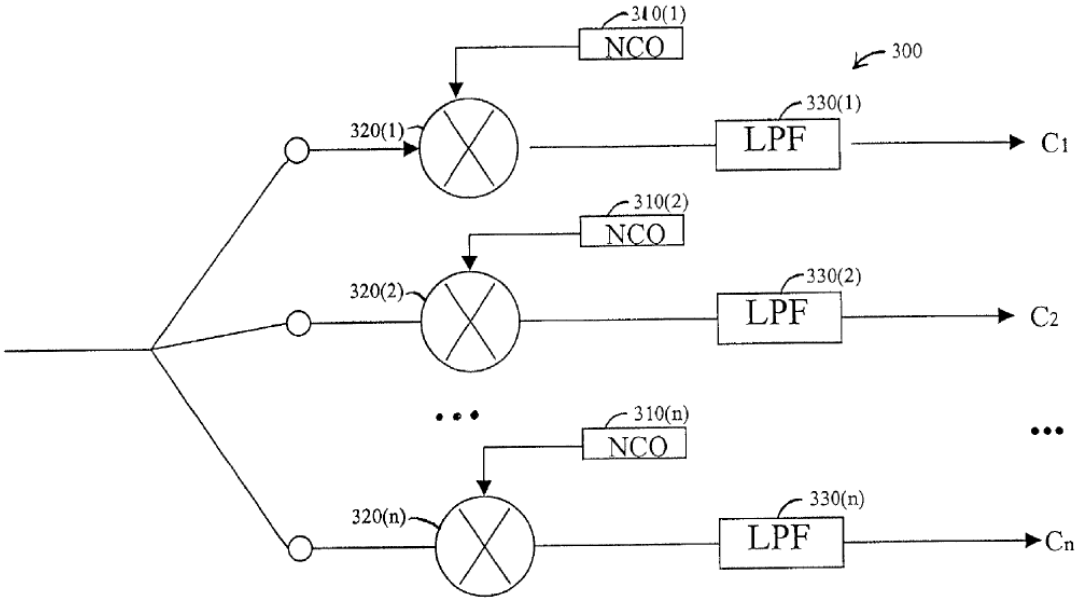

Fig. 3

As shown in Figure 3, "[d]igital tuner 300 includes a bank of n numeric control oscillators (NCOs) 310(1 . . . n), complex multipliers 320(1 . . . n), and low-pass filters (LPFs) 330(1 . . . n)." Ex. 1013 ¶ 30. Zhang further discloses

> Numeric oscillator 310(1) generates a frequency, or "target" frequency, that matches the characteristic frequency of a desired RF channel, or "target" RF channel. The output of NCO 310(1) is multiplied by all the RF channels received at complex multiplier 320(1). When [a] multi-channel RF signal is multiplied with the output of NCO 310(1), the frequency of target RF channel signal is shifted to a desired channel. In some embodiments of the present invention, the target RF channel is shifted to a baseband, i.e., centered at DC. LPFS 330(1 . . . n) receive all RF channels and each filters out all RF channels except for its target RF channel. Thus, only the target RF channel passes. Accordingly, separate RF channels exit digital tuner 300, i.e., the multi-channel RF signal is demultiplexed. Digital tuner circuit 300 then outputs the

> separated RF channels C_1 to C_n, each RF channel being centered at baseband.

Id. ¶ 32.

2. Independent Claim 1

Claim 1 is directed to a "wideband receiver system" that has recited configurations for its "mixer module," "wideband analog-to-digital converter (ADC) module," and "digital circuitry." Petitioner designates the preamble as limitation 1A and the configured components as limitations 1B through 1D, respectively. We address these elements, starting with Petitioner's arguments and then turning to the parties' dispute.

a. Limitation 1A: "wideband receiver system"

Claim 1 recites as its preamble "[a] wideband receiver system." Petitioner asserts that "Zhang describes 'a wide-band receiver' for use in digital set-top boxes, PVRs, and home media centers," which is demonstrated by "Zhang's multi-channel demodulator 200 . . . [that] receives an RF signal in a frequency band that carries multiple RF channels, with each channel having data streams modulated on a carrier signal." Pet. 23 (citing Ex. 1013 ¶¶ 23, 24, 41–47, Figs. 2, 6–8; Ex. 1001, 1:24–27; Ex. 1002 ¶¶ 34, 98–100).

Patent Owner does not specifically dispute Petitioner's contentions regarding the preamble. *See generally* PO Resp. And even if the preamble is limiting, we are persuaded by Petitioner's argument and evidence that Zhang teaches the subject matter of the preamble.

b. Limitation 1B: "mixer module"

Claim 1 recites "a mixer module configured to downconvert a plurality of frequencies that comprises a plurality of desired television

channels and a plurality of undesired television channels." For this component, Petitioner provides an annotated version of Figure 2 of Zhang, which is reproduced below. Pet. 25.

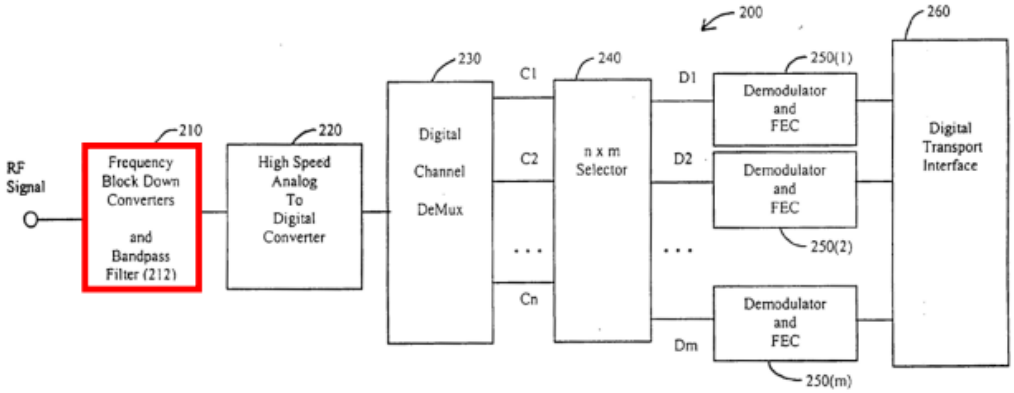

Fig. 2

Figure 2 of Zhang, as annotated by Petitioner, is a diagram of multi-channel demodulator 200. *See* Ex. 1013 ¶ 23. Petitioner asserts that "Zhang discloses the claimed 'mixer module,' for example, frequency block down converter 210 (**red**)," which "multiplies (i.e. mixes) an incoming RF signal with a reference signal to downconvert the RF signal to a lower frequency band." Pet. 25 (citing Ex. 1013 ¶ 25; Ex. 1002 ¶¶ 65–66, 101–102). According to Petitioner, "[t]he RF signal includes multiple RF carrier signals that each includes one or more TV content channels from a TV system." *Id.* (quoting Ex. 1013 ¶¶ 5, 23–25, 29, 41, claims 13, 27–30, 33; Ex. 1002 ¶¶ 103–104).

Patent Owner does not specifically dispute Petitioner's contentions regarding claim element 1B. *See generally* PO Resp. Based on Petitioner's argument and evidence, we find that Zhang teaches the recited mixer module of limitation 1B.

c. Limitation 1C: "wideband ADC module"

Claim 1 recites "a wideband analog-to-digital converter (ADC) module configured to digitize said plurality of frequencies comprising said plurality of desired television channels and said plurality of undesired television channels." For this component, Petitioner provides another annotated version of Figure 2 of Zhang, reproduced below. Pet. 27.

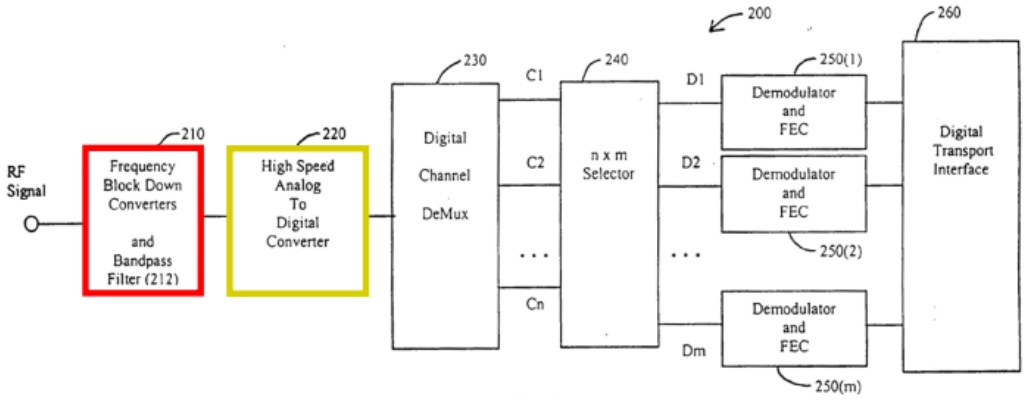

Fig. 2

Figure 2 of Zhang, as annotated by Petitioner, is a diagram of multi-channel demodulator 200. *See* Ex. 1013 ¶ 23. Petitioner asserts that "Zhang discloses the claimed 'wideband analog-to-digital converter (ADC) module' as ADC 220 (**gold**)." Pet. 27 (citing Ex. 1002 ¶¶ 108–110). Petitioner contends that "ADC 220 receives the down-converted multi-channel analog RF signal including desired and undesired channels, and converts the 'entire signal band'" and that the "ADC is 'wideband' because it digitizes several channels within the frequency block concurrently." Pet. 27 (citing Ex. 1013, code (57) ¶¶ 10, 25, 27–28, 31–32, 34, 41–42, claims 1, 2, 4, 7, 28, 34, 36, 37; Ex. 1002 ¶¶ 108–109).

Patent Owner does not specifically dispute Petitioner's contentions regarding claim element 1C. *See* PO Resp. Based on Petitioner's arguments

and evidence, we find that Zhang teaches the recited wideband ADC module of limitation 1C.

d. Limitation 1D: "digital circuitry"

Claim 1 further recites:

> digital circuitry configured to: select said plurality of desired television channels from said digitized plurality of frequencies; and output said selected plurality of television channels to a demodulator as a digital datastream.

For this component, Petitioner provides yet another annotated version of Figure 2 of Zhang, reproduced below. Pet. 29.

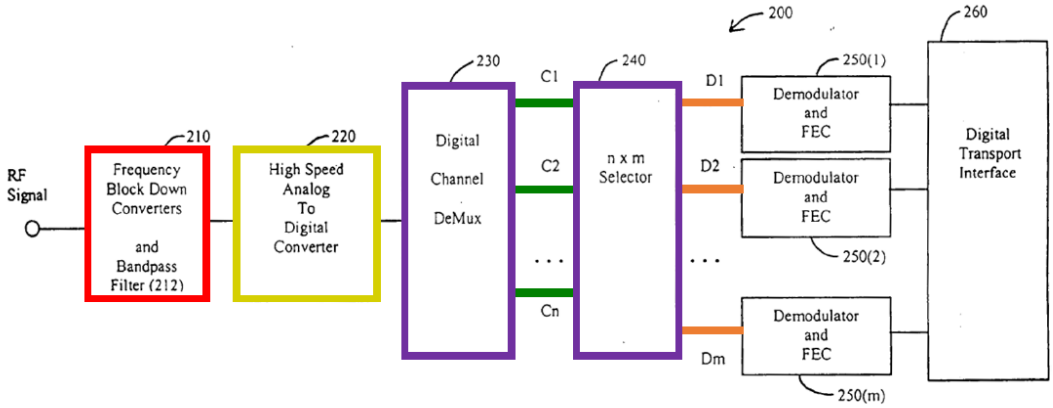

Fig. 2

Ex. 1013, Fig. 2 (annotated)

Figure 2 of Zhang, as annotated by Petitioner, is a diagram of multi-channel demodulator 200. *See* Ex. 1013 ¶ 23. Petitioner asserts that "Zhang teaches the claimed 'digital circuitry' as Digital Channel Demultiplexer 230, either alone, or in combination with all or part of Digital Selector 240 (**purple**)," which "are implemented with 'standard process CMOS,' a well-known type of digital logic integrated circuit." Pet. 28–29 (citing Ex. 1013 ¶¶ 44, 48; Ex. 1016, pp. 17–19; Ex. 1002 ¶¶ 111–125). Looking first to Digital Channel Demultiplexer 230 alone, Petitioner asserts that "Digital Channel Demultiplexer 230 receives the multi-channel digital RF signal

from ADC 220 and selects from this signal a number ‘n’ of desired channels C1 - Cn (**green**), each at a unique ‘target’ RF channel” and highlights that Zhang states that the “RF channels C1 to Cn contain content channels that are selected or used by a subscriber.” *Id.* at 29 (citing Ex. 1013 ¶¶ 28, 30–32, 42, claims 1, 2, 10, 11, 13, 17, 21, 23, 27, 28, 30, 33, 34, 36–41, Figs. 2, 3; Ex. 1002, ¶¶ 113–114). Petitioner contends that “[e]ach of the desired channels is output by Digital Channel Demultiplexer 230 as a parallel digital data stream on parallel paths C1 to Cn (green) to ‘one or more’ shared demodulators 250(1)-250(m) via Bus Selector 240.” *Id.* at 31 (citing 1013 ¶¶ 29, 32, Figs. 2, 3, claims 2–5, 9; Ex. 1001, 6:55–58, Fig. 2; Ex. 1002, ¶¶ 117–118, 121).

Petitioner asserts that “Zhang uses the same technique described in the ’362 patent for selection and outputting of desired channels C1 – Cn” and provides annotated versions of Figure 3 from Zhang and Figure 2 from the ’362 patent, reproduced below, to illustrate this point. Pet. 29.

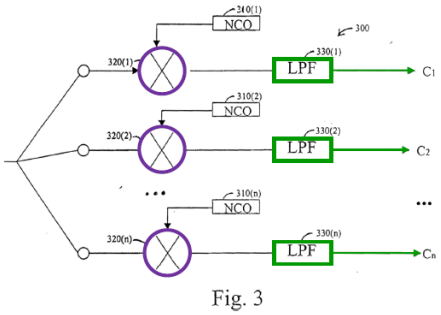

Ex. 1013, Fig. 3 (annotated)

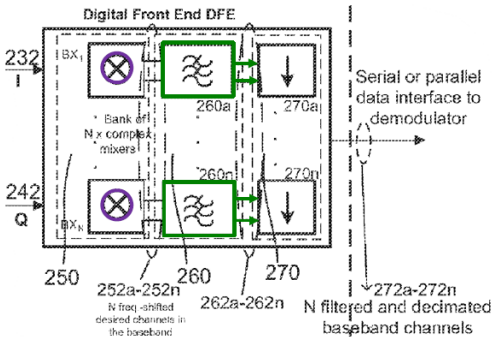

Ex. 1001, Fig. 2 (annotated)

The figure on the left is a simplified high-level schematic diagram of a digital tuner in accordance with Zhang’s teachings (Ex. 1013 ¶ 17) and, on the right, is a schematic block diagram of a wideband receiver system in accordance with the ’362 patent’s teachings (Ex. 1001, 3:56–57). Petitioner represents that the technique illustrated by both figures for selecting desired

channels as follows: "first using a bank of complex mixers (purple) to frequency-shift a digitized version of the downconverted wideband signal so that each mixer outputs a different desired channel shifted to baseband (0 Hz), and then using low pass filters (green) to filter out the undesired channels so that only the desired channels remain. *Id.* at 29–30 (citing 1001, 2:51–55, 5:49–6:54, Fig. 2; Ex. 1013 ¶¶ 27, 30–32, Fig. 3; Ex. 1002 ¶¶ 113–116).

Turning to Digital Channel Demultiplexer 230 in combination with Digital Selector 240, Petitioner notes that "Digital Selector 240 selects channels D_1–D_m (which comprise any or all of channels C_1–C_n) to output as a digital data stream to 'one or more' demodulators 250(1)–250(m)." Pet. 31 (citing Ex. 1013 ¶¶ 28, 29, 38, 39, 47, Fig. 3, claims 2–4; Ex. 1002 ¶ 119). Petitioner explains, "[f]or m=n, all of the selected channels are concurrently output to one or more demodulators, and for m<n, the user may output some or all n channels to the demodulator, just not concurrently," and "[b]y switching through the demultiplexed channels C_1–C_n selected by the user, Digital Selector 240 provides the subscriber with fast channel search capabilities." *Id.* (citing Ex. 1013 ¶¶ 5, 28, 29, 38, 39, 47, claims 2–4, 9, 30–32; Ex. 1002 ¶ 119).

Patent Owner makes several arguments regarding claim element 1D, which we will address below.

e. The Parties' Dispute

As noted above, Patent Owner disputes Petitioner's contentions regarding limitation 1D. Generally, Patent Owner's position is that "[t]hough both Zhang and the '362 patent involve a digitized RF input signal, and, ultimately, output desired RF channels, the method by which

they achieve this result is critically different." PO Resp. 3. That critical difference, according to Patent Owner, is that "the '362 patent ***only*** selects desired channels from the digitized input RF signal without selecting any undesired channels," whereas "Zhang blindly extracts ***all*** channels, ***both*** desired ***and*** undesired, from the digitized input RF signal, and only later selects the desired channels from the extracted channels." *Id.* at 3. Patent Owner cites Dr. Russ's declaration testimony that "Zhang digitizes an input signal . . . , consisting of 'n' desired and undesired channels, in the analog to digital converter 220," then "extracts from the digitized RF input signal ***all*** channels C_1–C_n in the entire signal band, ***both*** desired ***and*** undesired, in the Digital Channel DeMux 230 . . . without making any selection," and then uses the selector 240 to "select[] the desired channels and output[] them to demodulators." *Id.* at 4–5 (quoting Ex. 2009 ¶¶ 33–35).

Patent Owner supports its position that demultiplexer 230 does not select the desired television channels from the digitized plurality of frequencies in two ways. First, Patent Owner indicates that Zhang teaches that "ADC 220 is a high-speed ADC so that an entire signal band with n channels can be converted" and, subsequently, demultiplexer 230 receives those converted n channels from the ADC 220 and demultiplexes them into channels C_1–C_n. PO Resp. 11–12 (Ex. 1013 ¶ 27; Ex. 2009 ¶ 41). Patent Owner contends that it is "undisputed" that "the number of channels 'n' includes both desired and undesired channels." *Id.* (citing Ex. 2018, 78:14–22). Patent Owner concludes, "because 'n' in Zhang denotes the total number of channels, both desired and undesired, the demultiplexed channels C_1 to C_n, therefore, also encompass all channels in the 'entire signal band,' both desired and undesired, without any 'selection' of desired channels." *Id.*

at 12 (citing Ex. 2009 ¶¶ 42–43). This conclusion is confirmed, according to Patent Owner, by Zhang's explanation "that after channels C_1–C_n are extracted from the input RF signal, a module actually called a selector, an n×m ***Selector*** 240, selects the desired channel D_1–D_m from the total channels C_1–C_n." *Id.* at 12–13 (citing Ex. 1013 ¶¶ 28, 39, 42).

The second way Patent Owner supports the assertion that demultiplexer 230 does not select the desired television channels is by referencing Zhang's prosecution history. *See* PO Resp. 15–16 (citing Ex. 2012, 2–3; Ex. 2009 ¶¶ 45–47). In particular, Patent Owner highlights that, during prosecution before the European Patent Office, Zhang distinguished prior art systems that "demodulate all of the RF channels" because the demodulator of the claimed invention only received selected digital RF channels from the selector. Ex. 2012, 2–3; *see also* PO Resp. 15–16 (Ex. 2009 ¶¶ 45–47). Patent Owner asserts that "Zhang's prosecution history further confirms its express disclosures in its specification that channels C_1–C_n contain all channels, both desired and undesired, and that its Digital Channel Demultiplexer 230 does not perform any 'select[ion].'" PO Resp. 16.

Patent Owner argues that Petitioner's contentions are inconsistent with Zhang's disclosure, as well as being internally inconsistent. PO Resp. 16–29. Patent Owner asserts that Petitioner's contentions are inconsistent with Zhang's teaching that "the number of complex multipliers 320 (1…n) is the same number 'n' as the number of all channels, both desired and undesired, in the entire signal band." PO Resp. 17. Patent Owner asserts that Zhang's use of the phrase "target channel" in its discussion of its Figure 3 "is simply the specific one of the n channels (consisting of both

desired and undesired channels) that a particular mixer path is responsible for extracting." *Id.* at 19–20; *see also id.* at 20–22 (citing Ex. 2009 ¶¶ 54–57). And Patent Owner asserts that Petitioner's reliance on Zhang's statement that "RF channels C_1 to C_n contain channels that are selected or used by a subscriber" is misplaced because "[t]hose portions of Zhang do not state that channels C_1 to C_n contain 'only' desired channels." *Id.* at 25. Instead, Patent Owner posits, that representation in Zhang is properly understood as suggesting "channels C_1 to C_n contain all potentially desirable channels from which actual desired channels D1 to Dm can be selected." *Id.* (citing Ex. 1013 ¶ 28; Ex. 2009 ¶ 60).

Patent Owner argues that Petitioner's contentions are internally inconsistent, "to the extent Petitioner's mapping relies on Zhang's channels C_1-C_n as the claimed 'plurality of desired channels'" because "that mapping contradicts Petitioner's reliance on channels D_1-D_m as 'the plurality of desired channels' output on data bus 1." PO Resp. 29 (citing Ex. 2009 ¶ 68). As Figure 5 of Zhang clearly illustrates, Patent Owner states, "what is 'output' on Data Bus 1 in the selector 240 are channels D_1–D_m . . . , not channels C_1–C_n." *Id.* at 28 (citing Ex. 2009 ¶ 67).

Lastly, Patent Owner argues that Petitioner's reliance on channels D_1–D_m as the claimed "plurality of desired television channels" fails "because channels D_1–D_m are not selected 'from' the same 'plurality of frequencies' down converted and digitized," as recited in limitations 1B and 1C. PO Resp. 29. Patent Owner emphasizes that limitation 1D "requires circuitry to select 'said plurality of desired television channels ***from said digitized plurality of frequencies***,'" which refers to the "plurality of frequencies" that were downconverted and digitized in limitations 1B and

1C. *Id.* at 30. Patent Owner explains that because the digitized input signal received by digital channel demultiplexer 203 includes many frequency ranges that have been extracted and do not exist in channels C_1–C_n of Zhang, "Channels C_1–C_n, from which channels D_1–D_m are selected, are not the same 'plurality of frequencies' digitized by Zhang in its analog-digital converter 220 (which, in Zhang's implementation is the entire input)." *Id.* at 32–33 (citing Ex. 2009 ¶¶ 74–75). Patent Owner argues that "[i]f claim 1 of the '362 patent were read so broadly as to cover the selection of Zhang's channels D_1–D_m, then the language of the claim requiring that these channels be selected 'from the input signal' would be rendered superfluous." *Id.* at 34–35.

Petitioner counters that channels C_1–C_n and channels D_1–D_m independently teach the recited desired channels. Pet. Reply 5. Regarding channels C_1–C_n, Petitioner contends Zhang does not mandate that C_1–C_n include all channels. *Id.* at 5–6. Petitioner asserts "Zhang calls each of C_1–C_n a 'desired channel,' and the selected number 'n' of them is a variable disclosed as being less than the number of channels in the digitized input signal." *Id.* at 6 (citing Ex. 1013 ¶¶ 28, 30, 32–33, 42). As to channels D_1–D_m, Petitioner reiterates the combination of demultiplexer 230 with all or part of the selector 240 comprise the "digital circuitry" that "selects the desired channels from the digitized plurality of frequencies," "D_1–D_m are undisputedly the desired channels output by this circuitry," and the "input of this circuitry is undisputedly the digitized plurality of frequencies coming from the ADCs." *Id.* at 6. Patent Owner characterizes Petitioner's reply as "doubling down on the Petition's errors, continuing to inconsistently rely on both channels C_1–C_n and D_1–D_m as the claimed 'plurality of desired

television channels' that must be 'selected' by the claimed digital circuitry 'from said digitized plurality of frequencies.'" PO Sur-reply 1.

After studying the full record created by the parties, we find Petitioner's evidence and reasoning supports persuasively that Zhang's digital channel demultiplexer 230, either alone or with digital selector 240, discloses to a skilled artisan the "digital circuitry" limitation 1D recites. Pet. 28–36; Pet. Reply 2–26.

Starting with the undisputed facts, digital channel demultiplexer 230 and digital selector 240 disclosed by Zhang is "digital circuitry," which is configured to receive a plurality of frequencies comprising a plurality of desired/undesired television channels from ADC 220 and to output the desired television channels to demodulators 250 as a digital datastream. Tr. 71:14–17 (PO Counsel: "There is no dispute that in both Zhang and the patent, an RF signal that has both desired and undesired channel comes in and what's sent to demodulators are desired channels. Nobody is disputing that."), 134:3–5 (PO Counsel: "The issue is not whether the black box 230-plus-240 is the digital circuitry. It is. The issue is not whether or not that overall circuitry selects channels. At some level, it does."). In other words, Zhang teaches digital circuitry that is (1) capable of receiving a plurality of frequencies including desired/undesired television channels and (2) capable of distinguishing between the desired/undesired channels to output the desired television channels to a demodulator. We find these uncontested facts to be highly probative of Petitioner's contention that, to a skilled artisan, Zhang suggests that its digital circuitry is capable of selecting the desired television channels from a digitized plurality of frequencies that include both desired/undesired television channels. This is because Zhang's

digital circuitry is able to take what is input originally as a digitized plurality of frequencies having both desired/undesired television channels and, using those frequencies, pick out the desired television channels that are subsequently output to a demodulator. Zhang teaches that "because *only the selected channels* are later demodulated" the disclosed digital circuitry is "much faster than traditional analog channel switching through RF tuners" and it "dissipates less heat because fewer resources are required when demodulating *only the selected RF channels*." Ex. 1013 ¶ 28 (emphasis added).

Turning now to the disputed evidence from Zhang, we are persuaded that the evidence favors more heavily Petitioner's contention that Zhang's digital channel demultiplexer 230, either alone or with digital selector 240, discloses to a skilled artisan the "digital circuitry" that limitation 1D recites. First, channel demultiplexer 230 alone, is described by Zhang as being able to demultiplex the multi-channel digital RF signal received from ADC 220 into separate digital RF channels C_1–C_n. Ex. 1013 ¶ 28. Zhang states expressly that those "RF channels C_1–C_n contain content channels *that are selected or used by a subscriber*." *Id.* We agree with Petitioner that this evidence discloses, or at least strongly suggests, to a skilled artisan that the configuration of channel demultiplexer 230 allows it to pick out desired content channels from the multi-channel digital RF signal received from ADC 220 to generate RF channels C_1–C_n.

In addition, Zhang teaches an embodiment of channel demultiplexer 230 that generates RF channels C_1–C_n by using a numerical oscillator (NOC) 310 to generate a "target" frequency "that matches the characteristics frequency of *a desired RF channel, or 'target' RF channel*" and by using a

low-pass filter (LPF) that "filters out all RF channels *except for its target RF channel*" so that "only the target RF channel passes." Ex. 1013 ¶ 32. Here, again, we agree with Petitioner that this evidence discloses, or at least strongly suggests, to a skilled artisan that the configuration of channel demultiplexer 230 allows it to pick out desired content channels from the multi-channel digital RF signal received from ADC 220 to generate RF channels C_1–C_n.

Patent Owner's contrary arguments do not significantly diminish the weight of Petitioner's evidence. The fact that Zhang describes ADC 220 as "a high-speed ADC so that an entire signal band with n channels can be converted" offers little, if any, support to the notion that Zhang's channel demultiplexer 230 only extracts indiscriminately all channels across the entire signal band. Although we agree with Patent Owner that the above description by Zhang of the ADC characterizes "n" as representing a variable number of channels that may be in an entire signal band, without any regard to whether the television channel is desired or undesired, we disagree with Patent Owner that this provides significant evidence that channel demultiplexer 230 only discloses indiscriminately generating RF channels C_1–C_n without regard to whether the channel is a desired or undesired television channel. If Patent Owner were correct, it would not be necessary for Zhang to state, "RF channels C_1 to C_n *contain content channels that are selected or used by a subscriber*" (Ex. 1013 ¶ 28 (emphasis added)) because a skilled artisan would recognize that to be the case already.

We disagree also with Patent Owner that Zhang's prosecution history provides significant evidence that channel demultiplexer 230

indiscriminately generates RF channels C_1–C_n without regard to whether the channel is a desired or undesired television channel. *See* PO Resp. 15–16. Although the related prosecution history refers to the recited selector as allowing specific RF channels to be selected for demodulation (Ex. 1012, 2–3), when viewed in context, it is apparent that Zhang was distinguishing the prior art based on the recited claims outputting selected or desired RF channels to a demodulator rather than all of the desired and undesired channels. There is no indication Zhang is representing that RF channels C_1–C_n necessarily include both desired and undesired channels. It may very well be the case that sometimes the RF channels C_1–C_n include both desired and undesired channels, but that does not undermine Petitioner's evidence that Zhang also clearly teaches to a skilled artisan RF channels C_1–C_n can also be content channels that are selected or used by a subscriber.

Further unavailing is Patent Owner's attempt to diminish the significance of Zhang's teaching that RF channels C_1–C_n may be generated using NOC 310 to generate a "target" frequency "that matches the characteristics frequency of *a desired RF channel, or 'target' RF channel*" and a low-pass filter (LPF) that "filters out all RF channels *except for its target RF channel*" so that "only the target RF channel passes." Ex. 1013 ¶ 32. Patent Owner dismisses this clear teaching as simply "coincidental." PO Sur-reply 6. But we do not agree. Zhang expressly states "RF channels C_1 to C_n *contain content channels that are selected or used by a subscriber*" (Ex. 1013 ¶ 28 (emphasis added)) and neither Patent Owner nor its declarant explains why a skilled artisan would "target" or "desire" an "undesired" channel when separating out the channels from the entire signal band to create RF channels C_1–C_n.

Finally, regarding the alleged inconsistencies caused by mapping Zhang's channels C_1-C_n and, in the alternative, channels D_1-D_m to the claimed "plurality of desired channels" because what is output on data bus 1 from selector 240 are RF channels D_1–D_m, not RF channels C_1–C_n (PO Resp. 28), we are not convinced an actual inconsistency does exist because Zhang makes clear that RF channels D_1–D_m "are from the RF channels C_1 to C_n." Ex. 1013 ¶ 42; *see also id.* ¶ 28 ("selector 240 receives the demultiplexed digital RF channels C_1 to C_n and then selects one or more of the RF channels D_1 to D_m from one or more of the digital RF channels C_1 to C_n"). And as such, although Zhang refers to outputting RF channels D_1–D_m on data bus 1, a skilled artisan would readily recognize that the output channels are the same as the selected RF channels C_1–C_n (*see* Ex. 1081, 60:13–15 ("C1 is the exact same thing as D1. C2 is the exact same as D2. And so on an so forth."). Accordingly, Petitioner's reliance on RF channels C_1–C_n as the recited desired channels is persuasive.

As to Petitioner's theory that channels D_1–D_m teach the recited desired channels, we consider Figures 2, 3, and 5 of Zhang, which show selector 240 selects channels D_1 to D_m (e.g., desired channels) from channels C_1 to C_n and provides selected channels D_1 to D_m via a serial interface in selector 240 (e.g., selector 500). Ex. 1013, Figs. 2, 3, 5. Patent Owner acknowledges Zhang teaches that "[t]he output channels C_1–C_n of the digital channel demultiplexer 230 . . . is then fed into the selector 240 . . . , which selects channels D_1–D_m from the input channels C_1–C_n." PO Resp. 32 (citing Ex. 2009 ¶¶ 74–75; Ex. 1013 ¶ 28). Accordingly, Petitioner's reliance on channels D_1–D_m as the recited desired channels also is persuasive.

Patent Owner further argues that, "[t]o the extent Petitioner relies on channels D_1–D_m as the claimed 'plurality of desired channels,' that reliance also fails to disclose or render obvious the claims because channels D_1–D_m are not selected 'from' the same 'plurality of frequencies'" that Petitioner relies on for limitations 1B and 1C. PO Resp. 29; *see also id.* at 29–35.

Petitioner counters that "the digital circuitry [for performing step 1D] is demultiplexer 230, in combination with all or part of selector 240," which means "the input to the relied-upon digital circuitry (i.e., the input to demultiplexer 230) is the digitized plurality of frequencies output by the ADCs, *not* the individual channels C_1–C_n" and "[t]he output of the relied-upon circuit is D_1–D_m, which are the desired channels." Pet. Reply 8. According to Petitioner, "[i]t necessarily follows that the relied-upon digital circuitry is selecting the desired channels (D_1–D_m) 'from the digitized plurality of frequencies.'" *Id.* To illustrate, Petitioner provides a figure based on Figures 2, 3, and 5 of Zhang, reproduced below. *Id.* at 10.

Pet., 29 (Ex. 1013, Fig. 2, annotated)

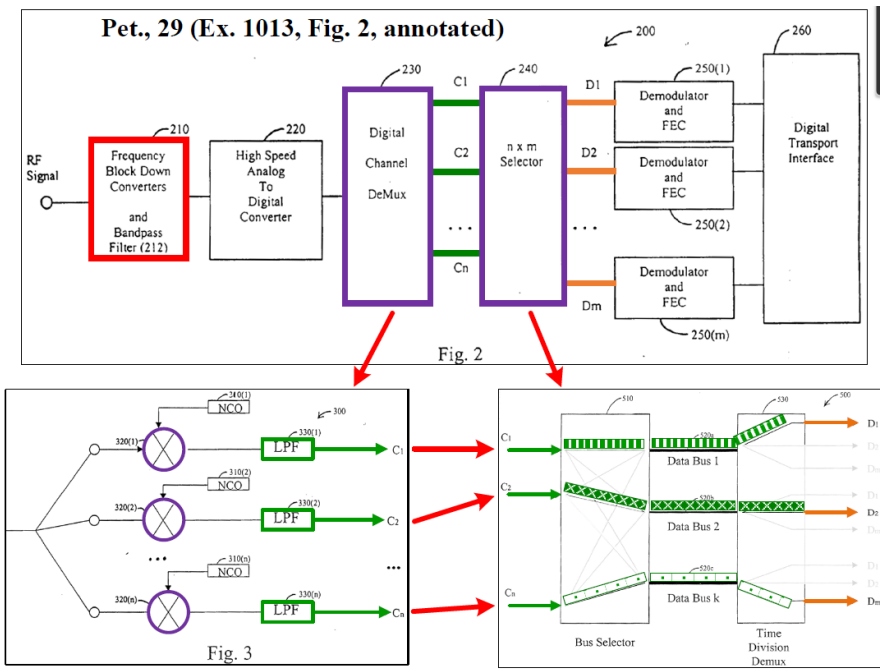

Pet., 30
(Ex. 1013, Fig. 3, annotated)

Pet., 33
(Ex. 1013, Fig. 5, annotated)

Petitioner's figure combines annotated versions of Figures 2, 3, and 5 of Zhang. *Id.* As discussed above, Figure 2 of Zhang shows multi-channel demodulator 200 with demultiplexer 230 and selector 240; Figure 3 of Zhang shows digital tuner 300 that can be used to implement demultiplexer 230; and Figure 5 of Zhang shows selector 500 that can be used to implement digital selector 240. Ex. 1013 ¶¶ 23, 30, 38. Petitioner asserts that its composite figure shows "the input to the relied-upon digital circuitry (coming from the bottom left side of the figure) is not the individual channels C_1–C_n output by demultiplexer 230, but rather the recited digitized plurality of frequencies." Pet. Reply 9.

We agree with Petitioner. Limitation 1D recites "select said plurality of desired television channels from said digitized plurality of frequencies." Petitioner contends Zhang's demultiplexer 230 and selector 240 *together* perform the step of claim element 1D. Petitioner identifies the signal provided by Zhang's ADC 220 as the recited digitized plurality of frequencies and Zhang's channels D_1–D_m as the recited digitized plurality of frequencies. Pet. 29, 31–32. As Petitioner's composite figure shows, channels D_1–D_m are selected from the signal provided by ADC 220. Pet. Reply 9; *see also* Ex. 1013, Figs. 2, 3, 5.

Patent Owner contends that Zhang's channels D_1–D_m are selected from channels C_1–C_n and *not* the plurality of frequencies provided by ADC 220. PO Resp. 29. But channels D_1–D_m are based on channels C_1–C_n, which are based on the signal provided by ADC 220. It, therefore, necessarily follows that channels D_1–D_m also are based on the same plurality of frequencies provided by ADC 220. In other words, the channels D_1–D_m, which are picked from channels C_1–C_n, are the same channels in both

groups, and Patent Owner does not dispute channels C_1–C_n are based on the plurality of frequencies provided by ADC 220. Petitioner correctly contends, "[n]othing in the claim language prevents the recited selection from being performed by a digital multiplexer 230 that selects individual channels from the incoming wideband digitized signal in combination with a digital selector 240 that passes certain of those signals along to a demodulator." Pet. Reply 9. This understanding is consistent with the stated objective of the '362 patent because channel selection at the demodulator is still avoided. *See* Ex. 1001, 2:24–27 ("It is desirable to have wideband receiver systems that can increase the dynamic range without requiring . . . channel selection at the demodulator").

In view of the foregoing, we find that Zhang teaches all the limitations of claim 1.

3. Independent Claim 11

Claim 11 is directed to a "method" and recites "the required functionality . . . performed by identical structural elements" in claim 1. Pet. 42. Thus, according to Petitioner, "claim 11 is directed to substantially identical subject matter as claim 1 and is anticipated and rendered obvious by Zhang for the same reasons discussed above with respect to claim 1." *Id.* Patent Owner agrees that "[i]ndependent claim 11 recites corresponding method steps to claim 1." PO Resp. 1; *see id.* at 7, 8 n.2.

Therefore, based on Petitioner's argument and evidence, and for the reasons given above as to claim 1, we find that Zhang teaches the similarly recited elements of claim 11.

4. Dependent Claims

Each of claims 2, 3, 8, 9, 12, 13, 18, and 19 depends from either independent claim 1 or 11. Petitioner contends that Zhang teaches the limitations recited in these dependent claims. Pet. 36–42 (citing Ex. 1013 ¶¶ 29–34, 38–39, Figs. 2, 3, 5, claims 21, 22, 37–40). Petitioner relies on the declaration testimony of Mr. Lett as support. *Id.* (citing Ex. 1002 ¶¶ 75–77, 126–140, 152–157).

Patent Owner does not specifically dispute Petitioner's contentions regarding the dependent claims. *See* PO Resp. Having reviewed Petitioner's argument and evidence (*see* Pet. 36–42), we find that Zhang teaches the limitations of the dependent claims.

5. Summary

In view of the foregoing, we determine that Petitioner has demonstrated by a preponderance of the evidence that claims 1–3, 8, 9, 11–13, 18, and 19 are anticipated by Zhang or would have been obvious in view of Zhang.

C. Asserted Challenge Based on Zhang and Pandey

Each of claims 2, 3, 12, and 13 of the '362 patent depends from either independent claim 1 or 11. Petitioner asserts that these dependent claims would have been obvious over Zhang and Pandey. Pet. 43–47. Petitioner relies on Pandey for teaching "specific serial and parallel interfaces when implementing a digital circuit design (e.g., such as Zhang's digital circuitry) on a FGPA or ASIC chip" and contends that "[i]t would have been obvious to apply Pandey's dedicated (i.e., parallel) and/or time-multiplexed (i.e., serial) interconnection to the interconnection between Zhang's demultiplexer 230, digital selector 240, and/or demodulators 250" to optimize the real

estate needed for implementing the digital portion of Zhang on a single chip. *Id*. at 43–46 (citing Ex. 1013 ¶¶ 29, 37–39, 44, 47–48; Ex. 1014, code (57), 1:15–2:12, 2:4–12, 2:64–3:5, 5:50–53, 6:10–15, 6:44–53, 7:13–19, 10:24–53, 10:58–11:5, 11:6–19, 13:33–14:7, 29:44–3:9, 30:31–31:15, 31:15–22, 31:56–63, 32:12–15, Fig. 37–39; Ex. 1057 ¶¶ 2–4, 6, 19–20, 23–27, Figs. 3, 4B, 5, 6, 7). Petitioner cites the declaration testimony of Mr. Lett as support. *Id*. (citing Ex. 1002 ¶¶ 126–136, 159–166).

Patent Owner does not specifically dispute Petitioner's contentions regarding the claims 2, 3, 12, and 13. *See* PO Resp. Having reviewed Petitioner's argument and evidence (*see* Pet. 43–47), and for the reasons given above with respect to Petitioner's challenges based on Zhang alone, we find that Petitioner's proposed combination of Zhang and Pandey teaches the limitations of these dependent claims and that Petitioner's proffered reasoning for combining Zhang and Pandey support a legal conclusion of obviousness.

In view of the foregoing, we determine that Petitioner has demonstrated by a preponderance of the evidence that claims 2, 3, 12, and 13 would have been obvious over Zhang and Pandey.

D. Asserted Challenge Based on Zhang and Mirabbasi

Each of claims 4–6 and 14–16 depend from either independent claim 1 or 11. Petitioner asserts that "it would have been obvious to implement Zhang's converter 210, ADC 220 and digital multiplexer 230 using the well-known structures in Mirabbasi to teach and render obvious claims 4–6 and 14–16." Pet. 50. Petitioner relies on Mirabbasi for teaching various ways known to configure wideband ADC converters, mixer modules, and complex mixers, which Petitioner asserts can be incorporated into Zhang's system to

provide a way to implement and improve Zhang's wideband receiver system. *Id.* at 49–60 (citing Ex. 1013 ¶¶ 5, 12, 23–32, 41, 48, Figs. 2, 3, claims 13, 27, 33; Ex. 1018, 4–11, 137–138, Figs. 1, 2, 3, 10; Ex. 1025, pp. 272, 274–275, 279–280; Ex. 1034, 35–36, 54–63, Fig. 3.29a, 3.3; Ex. 1001, 4:42–43, 6:7–27, 9:17–22, Fig. 3). Petitioner cites the declaration testimony of Mr. Lett as support. *Id.* (citing Ex. 1002 ¶¶ 66, 167–190).

Patent Owner does not specifically dispute Petitioner's contentions regarding the claims 4–6 and 14–16. *See generally* PO Resp. Having reviewed Petitioner's argument and evidence (*see* Pet. 49–60), and for the reasons given above with respect to Petitioner's challenges based on Zhang alone, we find that Petitioner's proposed combination of Zhang and Mirabbasi teaches the limitations of theses dependent claims and that Petitioner's proffered reasoning for combining Zhang and Mirabbasi support a legal conclusion of obviousness.

In view of the foregoing, we determine that Petitioner has demonstrated by a preponderance of the evidence that claims 4–6 and 14–16 would have been obvious over Zhang and Mirabbasi.

E. Asserted Challenge Based on Zhang, Mirabbasi, and Karabinis

Claim 7 depends from independent claim 1 via dependent claims 5 and 6; claim 17 depends from independent claim 11 via dependent claims 15 and 16. Petitioner asserts that dependent claims 7 and 17 would have been obvious over Zhang, Mirabbasi, and Karabinis. Pet. 60–68. Petitioner relies on Karabinis to teach a known way for outputting Zhang-Mirabbasi's desired channels for demodulation, "which is to shift the frequencies of the desired channels (e.g., D1-Dm) into a contiguous frequency band 422 (the claimed 'continuous frequency spectrum') using a plurality of frequency

translators 420, and summing the shifted channels with a summer." *Id.* at 65–66 (citing Ex. 1020 ¶¶ 17, 18, 42–44, 49, Figs. 4, 5, 7, claims 8, 9, 27, 28; Ex. 1002 ¶ 200). Petitioner contends that a skilled artisan would have considered it obvious to modify the Zhang-Mirabbasi receiver according to Karabinis to output the desired channels in a contiguous frequency spectrum because Karabinis was a known option to provide the channels for demodulation and permit the benefit of receiving all of the desired channels simultaneously over a single bus. *Id.* at 66–67 (citing Ex. 1002 ¶ 201).

Patent Owner does not specifically dispute Petitioner's contentions regarding claims 7 and 17. *See generally* PO Resp. Having reviewed Petitioner's argument and evidence (*see* Pet. 60–68), and for the reasons given above with respect to Petitioner's challenge based on Zhang and Mirabbasi, we find that Petitioner's proposed combination of Zhang, Mirabbasi, and Karabinis teaches the limitations of dependent claims 7 and 17 and that Petitioner's proffered reasoning for combining Zhang, Mirabbasi, and Karabinis support a legal conclusion of obviousness.

In view of the foregoing, we determine that Petitioner has demonstrated by a preponderance of the evidence that claims 7 and 17 would have been obvious over Zhang, Mirabbasi, and Karabinis.

F. Asserted Challenge Based on Zhang and Jensen

Each of claims 10 and 20 depend from either independent claim 1 or 11. Petitioner asserts that, in view of Jensen's teachings, it would have been obvious to a skilled artisan to "included a decimator circuit in the Zhang's Channel Demultiplexer 230 or Digital Selector 240, either as a separate component following the low pass filters 330 or as part of the filters themselves (e.g., using channel-select decimation filters as low pass filters

330), to reduce the sampled data of the digital signals and thereby reduce power consumption and/or complexity in subsequent processing (e.g., in demodulators 250)." Pet. 71 (citing Ex. 1013 ¶¶ 29–32, Fig. 3; Ex. 1026 ¶ 7; Ex. 1002 ¶ 209). Petitioner relies on Jensen to teach decimation "was commonly performed to reduce a sampling rate of a digital signal." *Id.* at 69 (citing Ex. 1026 ¶¶ 7, 27; Ex. 1002 ¶ 206).

Patent Owner does not specifically dispute Petitioner's contentions regarding the claims 10 and 20. *See generally* PO Resp. Having reviewed Petitioner's argument and evidence (*see* Pet. 68–72), and for the reasons given above with respect to Petitioner's challenges based on Zhang alone, we find that Petitioner's proposed combination of Zhang and Jensen teaches the limitations of dependent claims 10 and 20, as well as, Petitioner's proffered reasoning for combining Zhang and Jensen support a legal conclusion of obviousness.

In view of the foregoing, we determine that Petitioner has demonstrated by a preponderance of the evidence that claims 10 and 20 would have been obvious over Zhang and Jensen.

G. Remaining Grounds

Petitioner's remaining grounds (i.e., claims 2 and 3 are obvious in view of Zhang, Mirabbasi, and Pandey; claim 10 is obvious in view of Zhang, Mirabbasi, and Jensen) are contingent upon the term "digital circuitry" being construed as means-plus-function limitation. *See* Pet. 72. However, neither party actually argues that 35 U.S.C. § 112, paragraph 6, applies to that term, moreover, neither party attempts to overcome the presumption that the term is not a means-plus-function limitation. The term

"digital circuitry," therefore, has not been construed as such. As a result, Petitioner's remaining grounds are moot.

IV. CONCLUSION

For the reasons given, Petitioner has demonstrated by a preponderance of the evidence that claims 1–20 of the '362 patent are unpatentable as follows.

Claim(s)	35 U.S.C. §	Reference(s)/ Basis	Claim(s) Shown Unpatentable	Claim(s) Not Shown Unpatentable
1–3, 8, 9, 11–13, 18, 19	102	Zhang	1–3, 8, 9, 11–13, 18, 19	
1–3, 8, 9, 11–13, 18, 19	103(a)	Zhang	1–3, 8, 9, 11–13, 18, 19	
2, 3, 12, 13	103(a)	Zhang, Pandey	2, 3, 12, 13	
4–6, 14–16	103(a)	Zhang, Mirabbasi	4–6, 14–16	
7, 17	103(a)	Zhang, Mirabbasi, Karabinis	7, 17	
10, 20	103(a)	Zhang, Jensen	10, 20	
2, 3[8]	103(a)	Zhang, Mirabbasi, Pandey		
10[9]	103(a)	Zhang, Mirabbasi, Jensen		
Overall Outcome			1–20	

[8] This ground has been rendered moot because the term "digital circuitry" has not been shown to be a means-plus-function limitation.
[9] This ground has been rendered moot because the term "digital circuitry" has not been shown to be a means-plus-function limitation.

V. ORDER

In consideration of the foregoing, it is hereby

ORDERED that claims 1–20 of the ’362 patent have been shown to be unpatentable[10]; and

FURTHER ORDERED that, because this is a Final Written Decision, parties to the proceeding seeking judicial review of the decision must comply with the notice and service requirements of 37 C.F.R. § 90.2.

[10] Should Patent Owner wish to pursue amendment of the challenged claims in a reissue or reexamination proceeding subsequent to the issuance of this Decision, we draw Patent Owner’s attention to the April 2019 Notice Regarding Options for Amendments by Patent Owner Through Reissue or Reexamination During a Pending AIA Trial Proceeding. *See* 84 Fed. Reg. 16,654 (Apr. 22, 2019). If Patent Owner chooses to file a reissue application or a request for reexamination of the challenged patent, we remind Patent Owner of its continuing obligation to notify the Board of any such related matters in updated mandatory notices. *See* 37 C.F.R. §§ 42.8(a)(3), (b)(2).

FOR PETITIONER:

Frederic Meeker
Michael S. Cuviello
Harry W. Porter
Paul T. Qualey
Joshua L. Davenport
BANNER & WITCOFF, LTD.
fmeeker@bannerwitcoff.com
mcuviello@bannerwitcoff.com
wporter@bannerwitcoff.com
pqualey@bannerwitcoff.com
jdavenport@bannerwitcoff.com

FOR PATENT OWNER:

Jason A. Engel
Erik J. Halverson
Kyle M. Kantarek
Nolan R. Hubbard
K&L GATES LLP
jason.engel.ptab@klgates.com
erik.halverson@klgates.com
kyle.kantarek@klgates.com
nolan.hubbard@klgates.com

Kenneth J. Weatherwax
Parham Hendifar
Nathan Lowenstein
LOWENSTEIN & WEATHERWAX LLP
weatherwax@lowensteinweatherwax.com
hendifar@lowensteinweatherwax.com
lowenstein@lowensteinweatherwax.com