US009210362B2

(12) **United States Patent**
Reddy et al.

(10) **Patent No.: US 9,210,362 B2**
(45) **Date of Patent: *Dec. 8, 2015**

(54) **WIDEBAND TUNER ARCHITECTURE**

(71) Applicant: **MaxLinear, Inc.**, Carlsbad, CA (US)

(72) Inventors: **Madhukar Reddy**, Carlsbad, CA (US); **Curtis Ling**, Carlsbad, CA (US); **Tim Gallagher**, Carlsbad, CA (US)

(73) Assignee: **MaxLinear, Inc.**, Carlsbad, CA (US)

(*) Notice: Subject to any disclaimer, the term of this patent is extended or adjusted under 35 U.S.C. 154(b) by 0 days.

This patent is subject to a terminal disclaimer.

(21) Appl. No.: **14/614,543**

(22) Filed: **Feb. 5, 2015**

(65) **Prior Publication Data**

US 2015/0156535 A1 Jun. 4, 2015

Related U.S. Application Data

(63) Continuation of application No. 13/962,871, filed on Aug. 8, 2013, which is a continuation of application No. 12/762,900, filed on Apr. 19, 2010, now Pat. No. 8,526,898.

(60) Provisional application No. 61/170,526, filed on Apr. 17, 2009.

(51) **Int. Cl.**

H04B 1/16	(2006.01)
H04N 5/50	(2006.01)
H04B 1/00	(2006.01)

(Continued)

(52) **U.S. Cl.**

CPC ***H04N 5/50*** (2013.01); ***H04B 1/0014*** (2013.01); ***H04N 21/4263*** (2013.01); ***H04N 21/4383*** (2013.01); ***H04N 21/454*** (2013.01); ***H04N 21/6193*** (2013.01)

(58) **Field of Classification Search**

USPC 455/131, 140, 207, 214, 313, 315, 323, 455/324, 325, 334

See application file for complete search history.

(56) **References Cited**

U.S. PATENT DOCUMENTS

5,280,636 A * 1/1994 Kelley et al. 455/131
6,906,498 B2 6/2005 Breuch et al.

(Continued)

FOREIGN PATENT DOCUMENTS

EP 2087623 A2 8/2009

OTHER PUBLICATIONS

Jeffrey A. Weldon, et al. A 1.75-GHz Highly Integrated Narrow-Band CMOS Transmitter With Harmonic-Rejection Mixers, IEEE Journal of Solid-State Circuits, Dec. 2001, pp. 2003-2015, vol. 36, No. 12, Seattle, Washington.

Primary Examiner — Blane J Jackson
(74) *Attorney, Agent, or Firm* — McAndrews, Held & Malloy, Ltd.

(57) **ABSTRACT**

A wideband receiver system comprises a mixer module, a wideband analog-to-digital converter (ADC) module, and digital circuitry. The mixer module is configured to downconvert a plurality of frequencies that comprises a plurality of desired television channels and a plurality of undesired television channels. The wideband ADC module is configured to digitize the swatch of frequencies comprising the plurality of desired television channels and the plurality of undesired television channels. The digital circuitry is configured to select the desired plurality of television channels from the digitized plurality of frequencies, and output the selected plurality of television channels to a demodulator as a digital datastream.

20 Claims, 10 Drawing Sheets

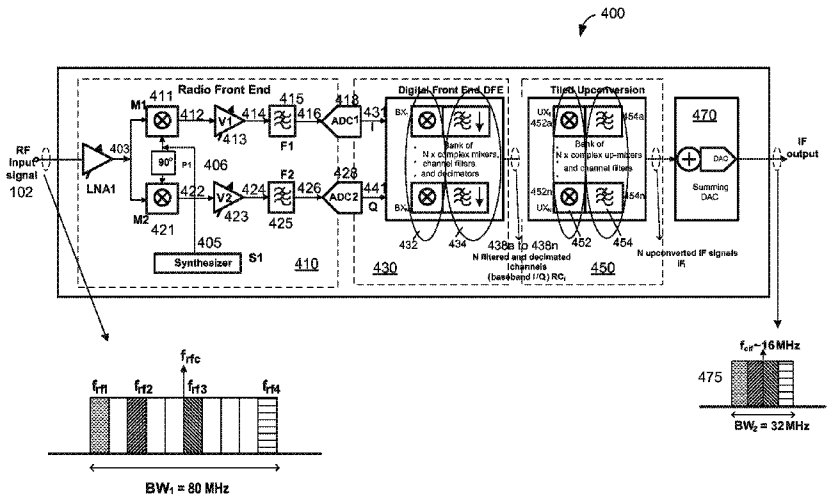

Comcast, Ex. 1101

(51) **Int. Cl.**

H04N 21/426	(2011.01)
H04N 21/438	(2011.01)
H04N 21/454	(2011.01)
H04N 21/61	(2011.01)

(56) **References Cited**

U.S. PATENT DOCUMENTS

6,992,855	B2	1/2006	Ehrlich	
7,095,454	B2	8/2006	Waight et al.	
7,167,694	B2	1/2007	Khoini-Poorfard et al.	
7,362,178	B2	4/2008	Montemayor et al.	
7,373,125	B2	5/2008	Godambe et al.	
7,421,259	B2	9/2008	Gomez et al.	
7,599,673	B2 *	10/2009	Maxim et al.	455/179.1
8,285,240	B2	10/2012	Seendripu et al.	
8,300,681	B2	10/2012	Petrovic et al.	
8,374,568	B2	2/2013	Seendripu et al.	
8,374,569	B2	2/2013	Seendripu et al.	
8,374,570	B2	2/2013	Seendripu et al.	
8,526,898	B2 *	9/2013	Reddy et al.	455/207
8,577,319	B2	11/2013	Ling et al.	
8,666,350	B2	3/2014	Vauhkonen	
8,909,187	B2	12/2014	Seendripu et al.	
9,059,672	B2	6/2015	Ling et al.	
2005/0040909	A1	2/2005	Waight et al.	
2007/0042742	A1	2/2007	Kim et al.	
2007/0111661	A1	5/2007	Bargroff et al.	

* cited by examiner

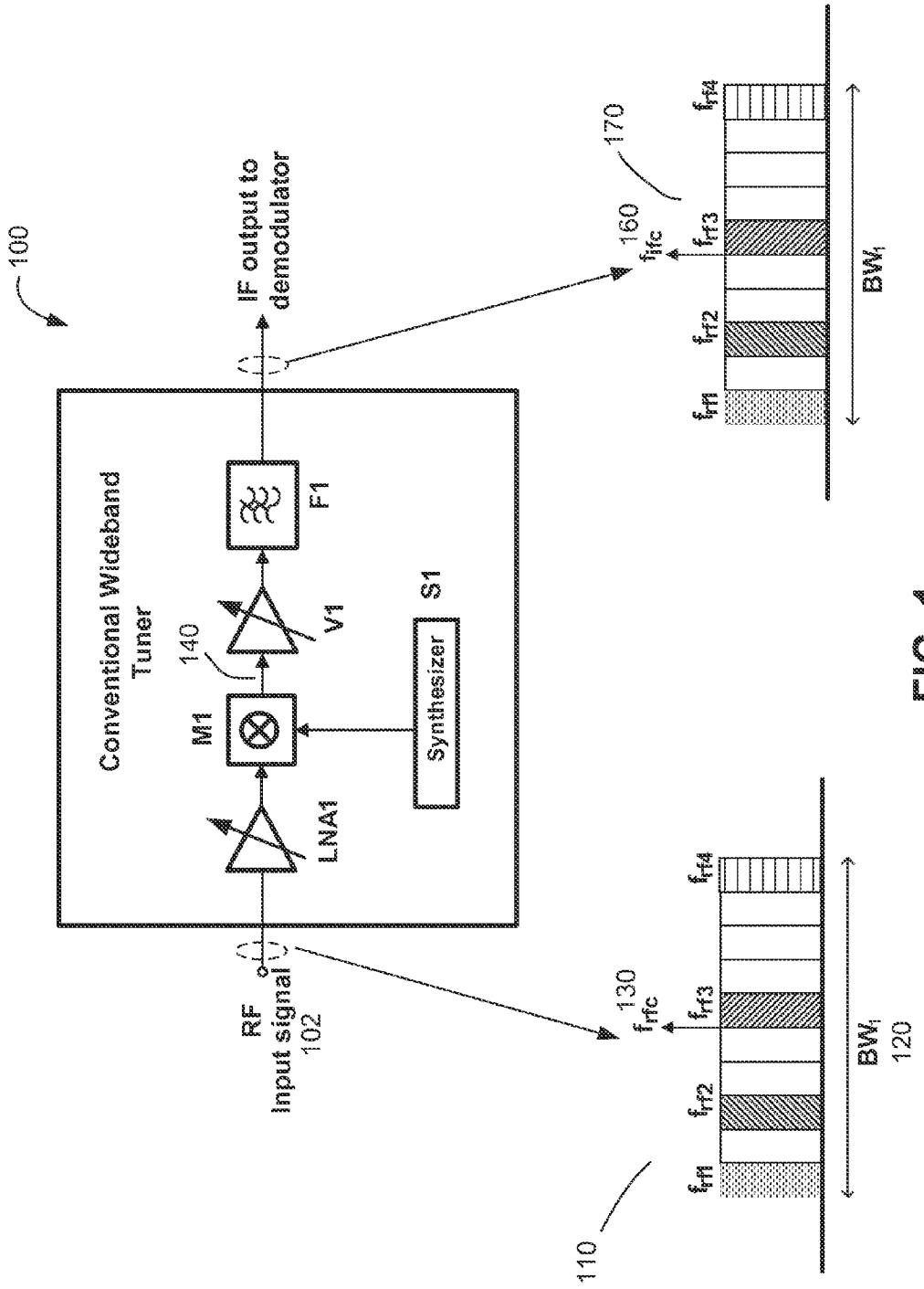

FIG. 1
(Prior Art)

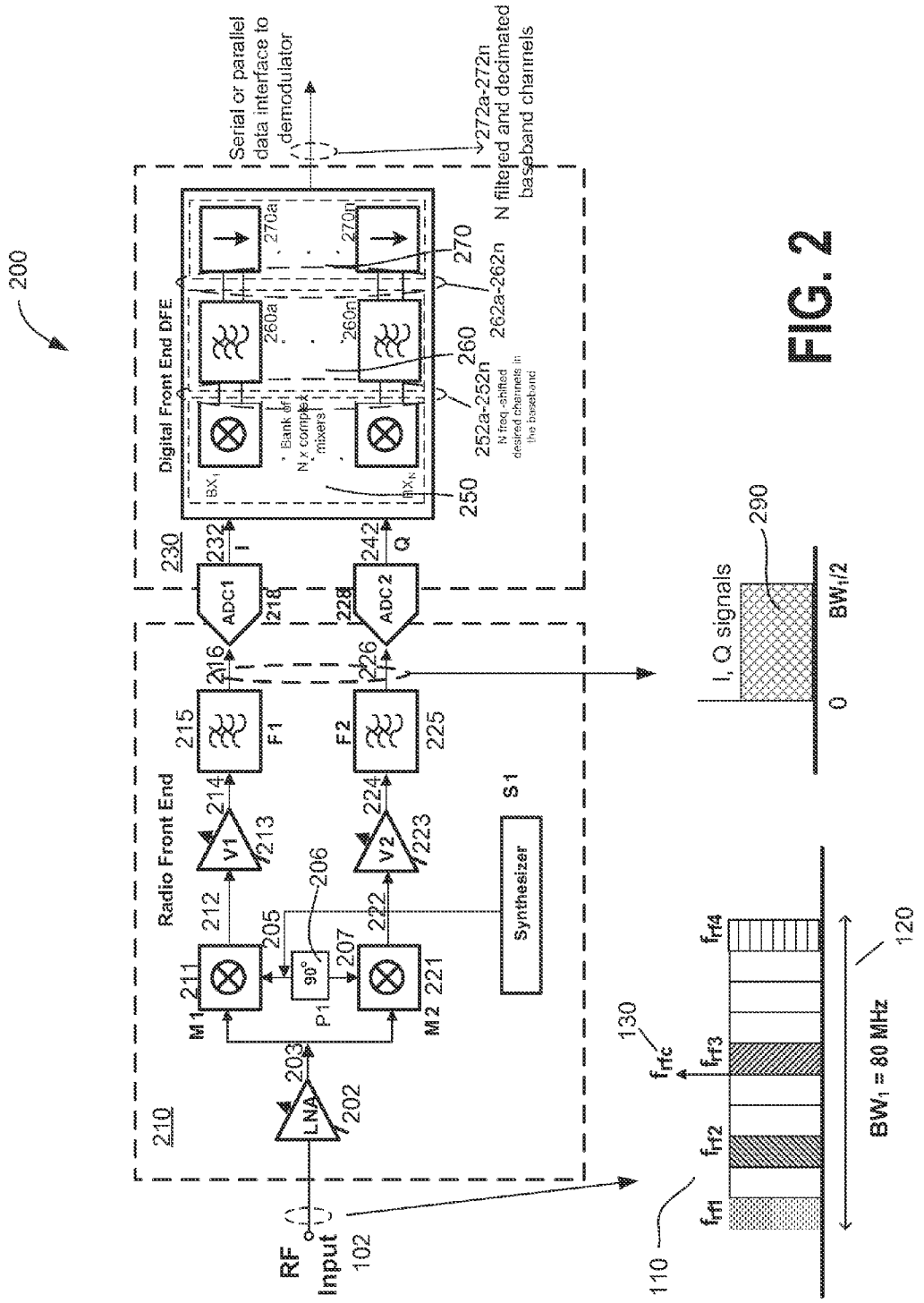
200
Serial or parallel data interface to demodulator
272a-272n
N filtered and decimated baseband channels
Digital Front End DFE
270a
270n
270
262a-262n
260a
260n
260
252a-252n
N freq.-shifted desired channels in the baseband
Bank of N x complex mixers
BX1
BXN
250
230
232
I
242
Q
ADC1
218
228
ADC2
216
226
215
F1
F2
225
214
V1
213
224
V2
223
S1
Synthesizer
212
206
205
207
222
211
M1
90°
P1
M2
221
203
LNA
202
210
RF Input
102
I, Q signals
290
BW1/2
0
130
frfc
frf4
frf3
frf2
frf1
110
120
BW1 = 80 MHz

FIG. 2

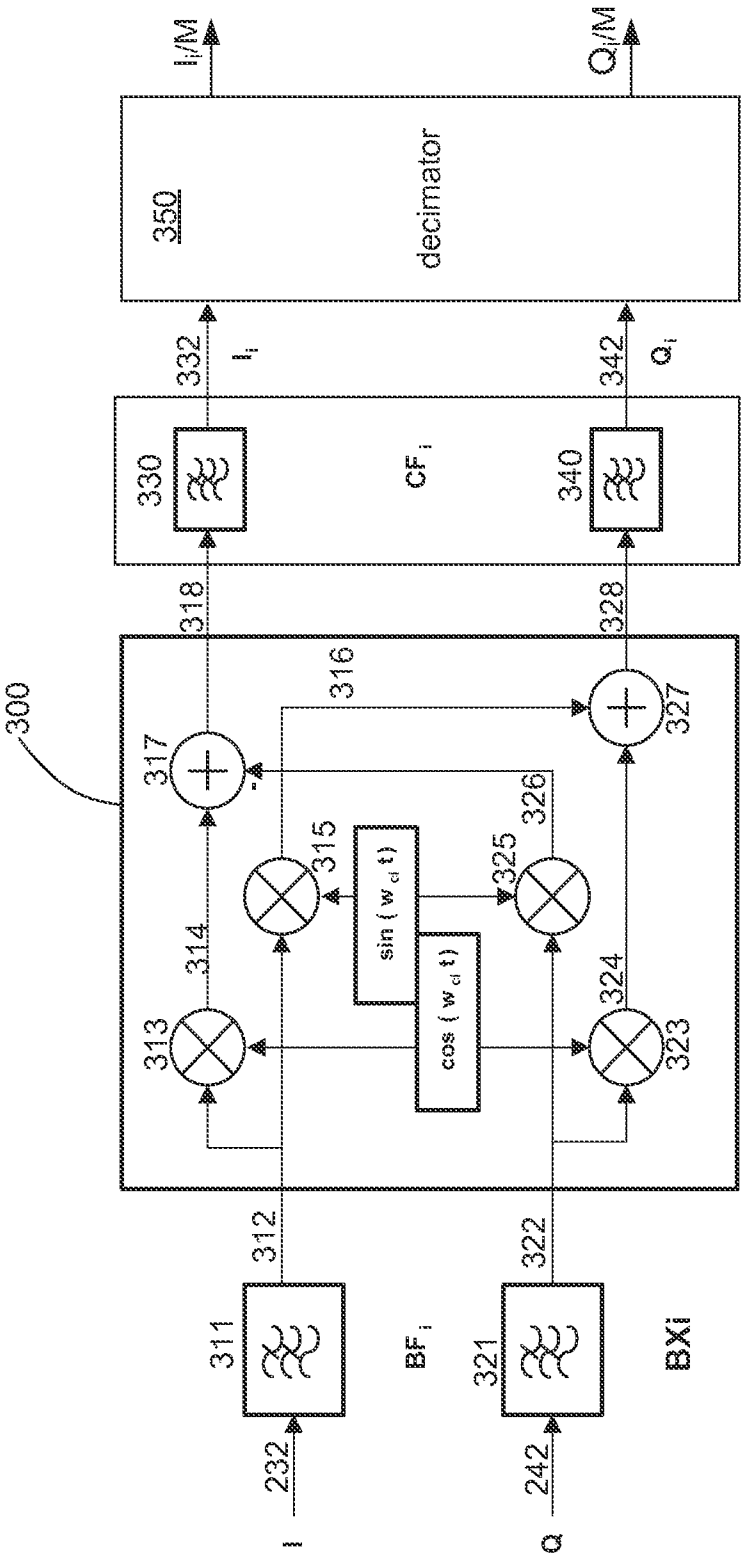
I
Q
232
242
311
321
BF i
BXi
312
322
300
313
314
315
316
317
318
323
324
325
326
327
328
330
340
CF i
332
342
I i
Q i
350
decimator
I i/M
Q i/M
sin (w cl t)
cos (w cl t)

FIG. 3

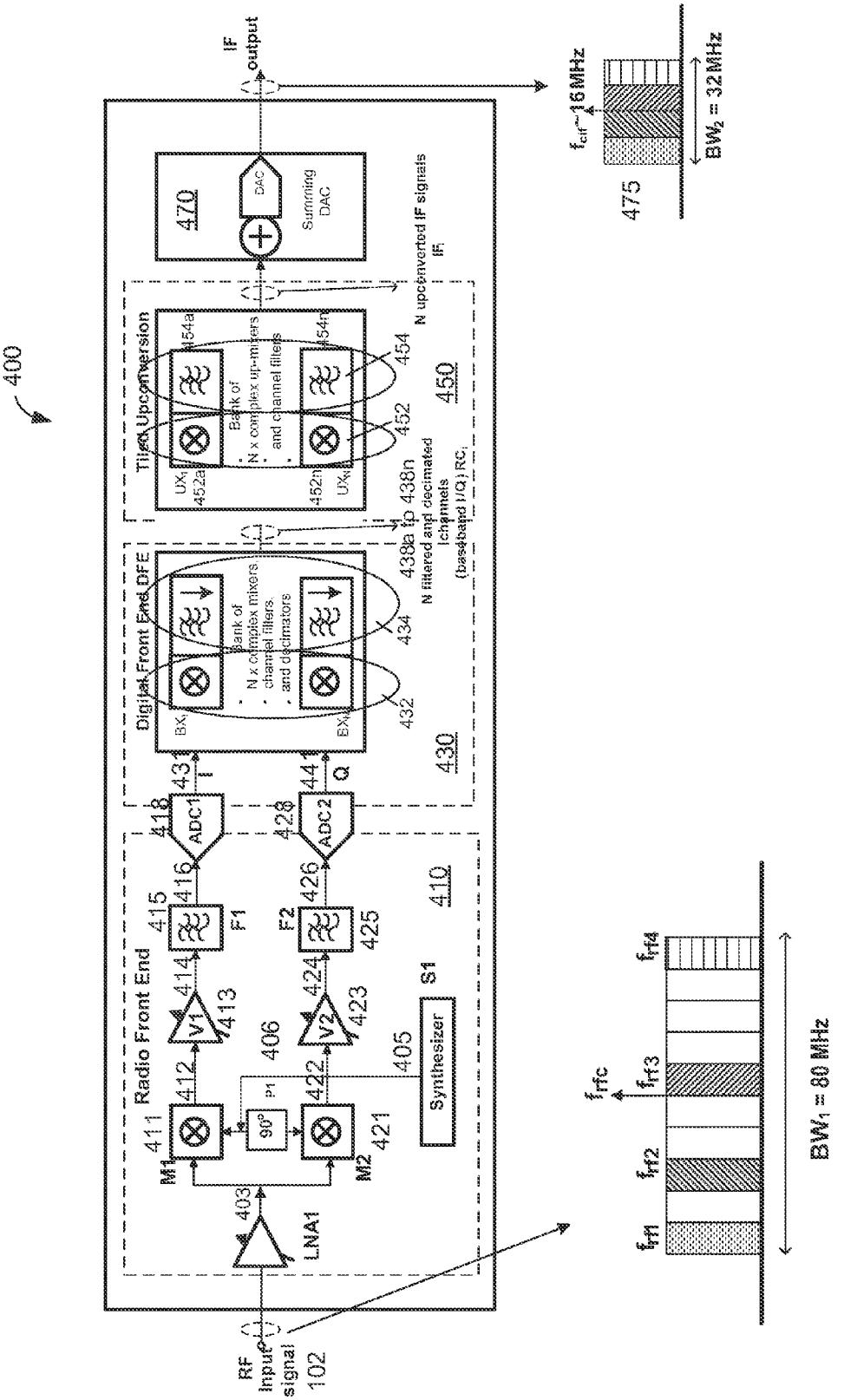
400
RF input signal 102
LNA1
403
M1
M2
411
421
412
422
90°
P1
405
Synthesizer
S1
406
V1
V2
413
423
414
424
415
425
F1
F2
416
426
ADC1
ADC2
418
428
431
441
I
Q
410
Radio Front End
Digital Front End DFE
BX1
BXN
432
434
Bank of N x complex mixers, channel filters, and decimators
430
438a to 438n
N filtered and decimated channels (baseband I/Q) RC1
Tiled Upconversion
UX1
452a
452n
UXN
454a
454n
452
454
Bank of N x complex up-mixers and channel filters
450
N upconverted IF signals IF1
470
DAC
Summing DAC
IF output
475
fcif~16 MHz
BW2 = 32 MHz
frf1
frf2
frfc
frf3
frf4
BW1 = 80 MHz

FIG. 4

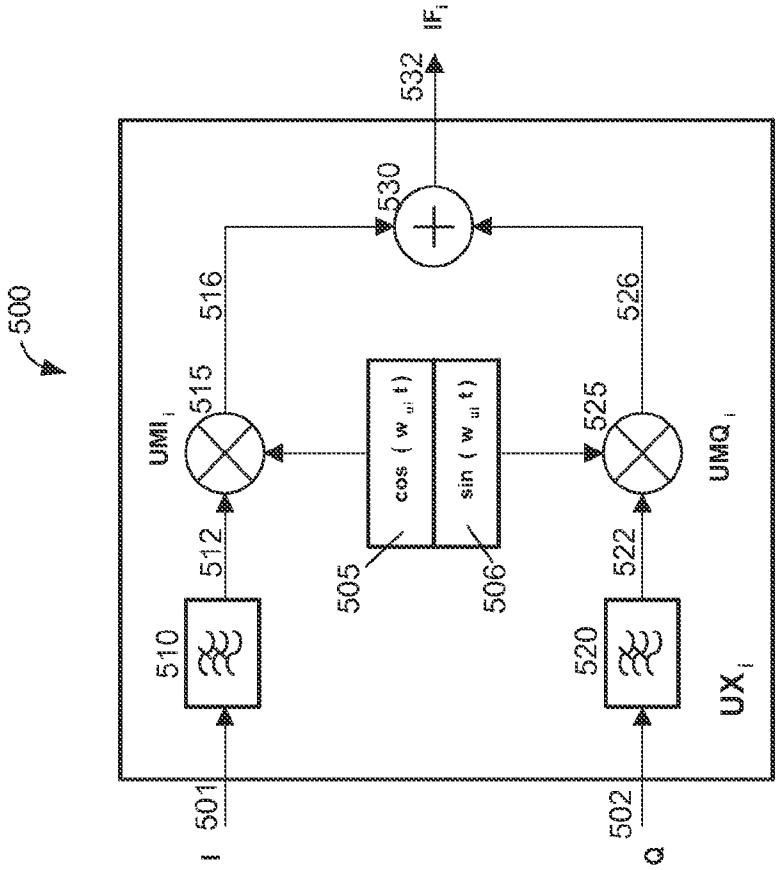
500
501
502
I
Q
510
520
512
522
515
525
516
526
530
532
505
506
cos (w ui t)
sin (w ui t)
UMI i
UMQ i
UX i
IF i

FIG. 5

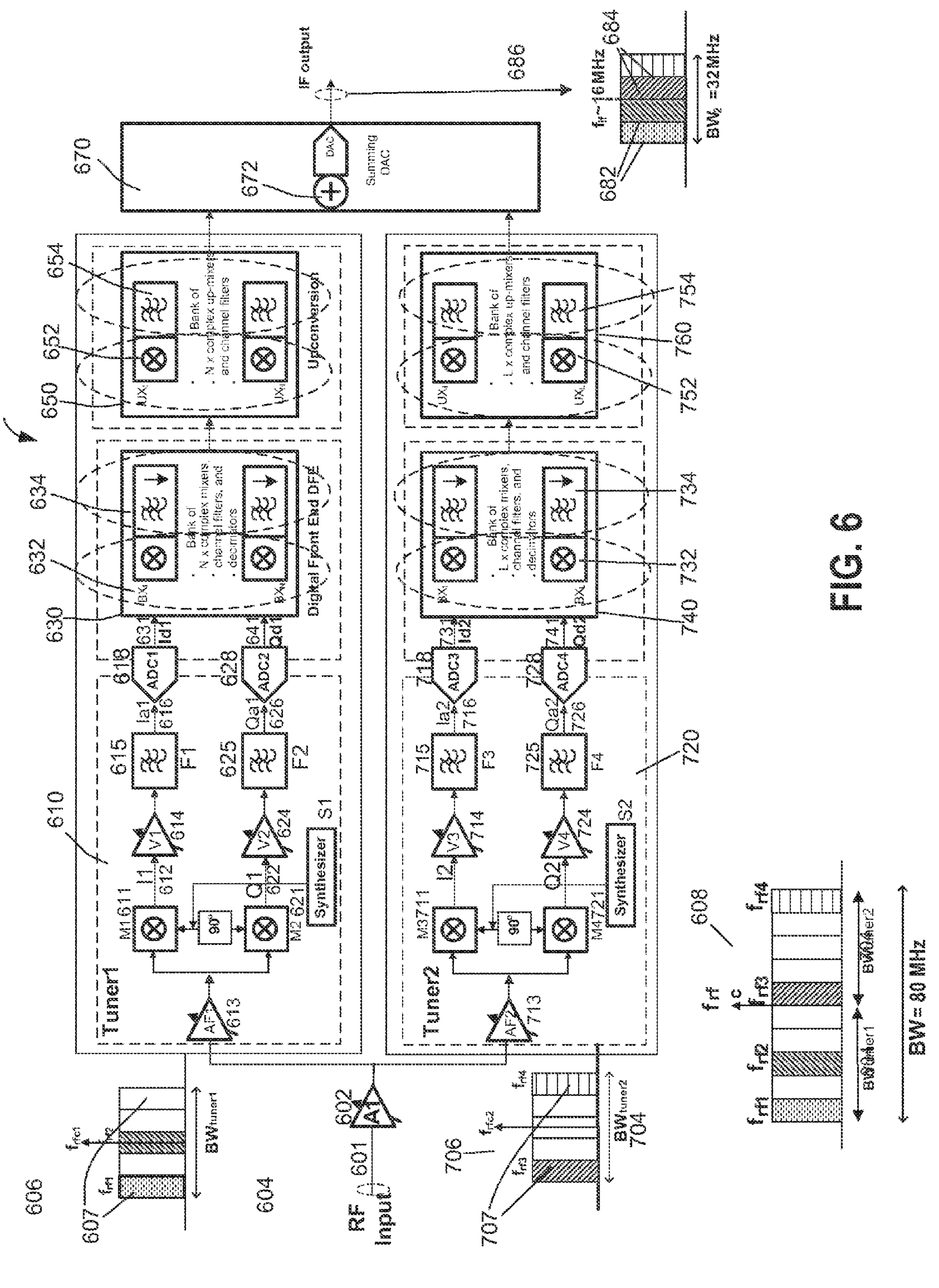
600
Tuner1
Tuner2
Synthesizer
Digital Front End DFE
Upconversion
Bank of N x complex mixers, channel filters, and decimators
Bank of L x complex mixers, channel filters, and decimators
Bank of N x complex up-mixers and channel filters
Bank of L x complex up-mixers and channel filters
Summing DAC
DAC
IF output
RF Input
BW = 80 MHz
BW_2 =32MHz
f_{if}~16MHz
BW_{tuner1}
BW_{tuner2}

FIG. 6

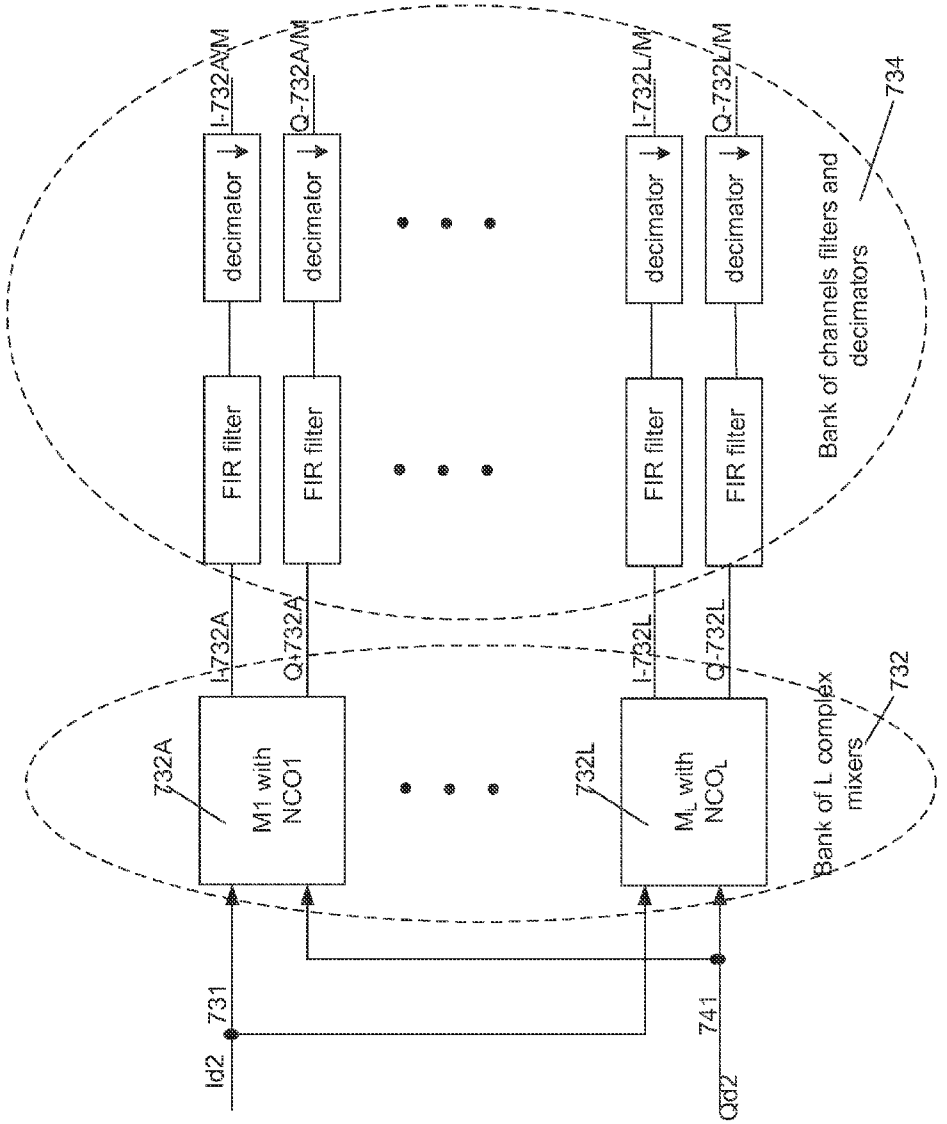
Id2
731
Qd2
741
732A
M1 with NCO1
732L
M_L with NCO_L
I-732A
Q-732A
I-732L
Q-732L
Bank of L complex mixers
732
FIR filter
FIR filter
FIR filter
FIR filter
decimator
decimator
decimator
decimator
I-732A/M
Q-732A/M
I-732L/M
Q-732L/M
Bank of channels filters and decimators
734

FIG. 7

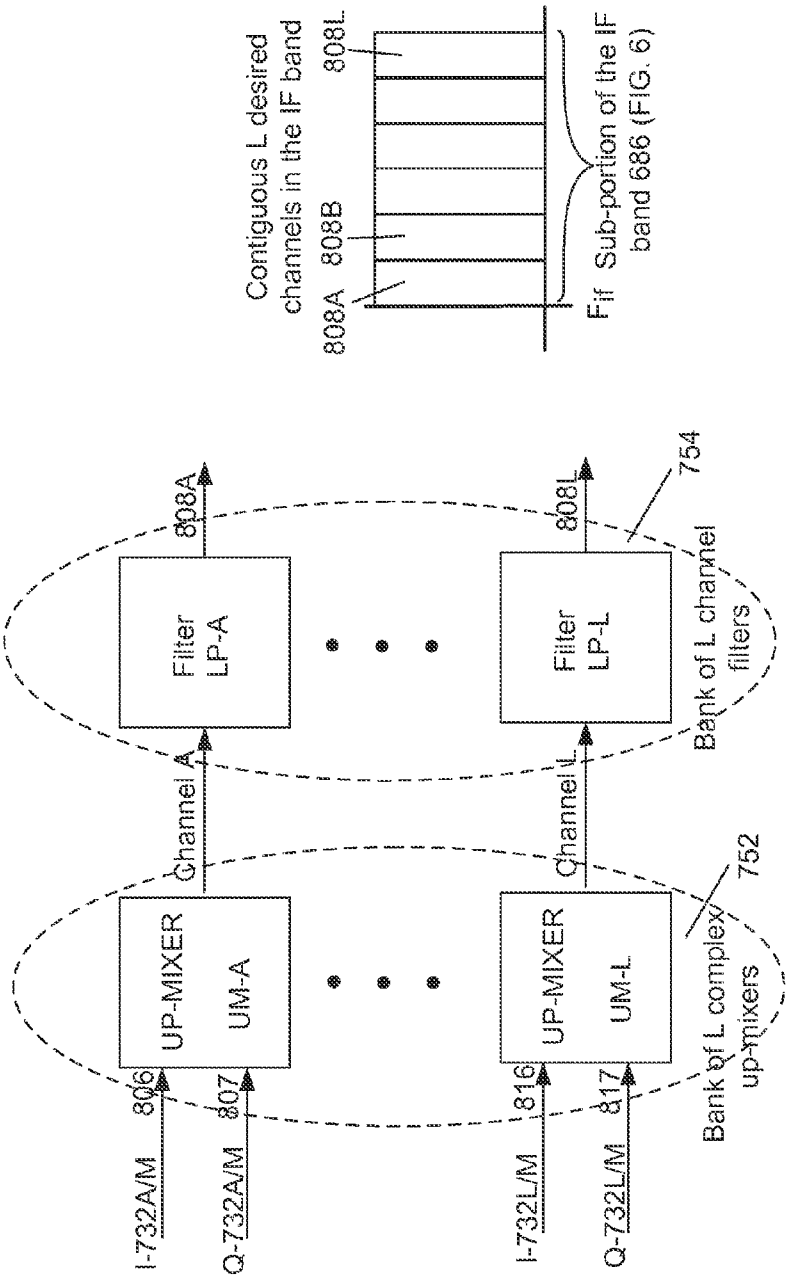
Contiguous L desired channels in the IF band
808A
808B
808L
F_{if}
Sub-portion of the IF band 686 (FIG. 6)
I-732A/M
Q-732A/M
806
807
UP-MIXER
UM-A
Channel A
Filter LP-A
808A
I-732L/M
Q-732L/M
816
817
UP-MIXER
UM-L
Channel L
Filter LP-L
808L
752
Bank of L complex up-mixers
754
Bank of L channel filters

FIG. 8

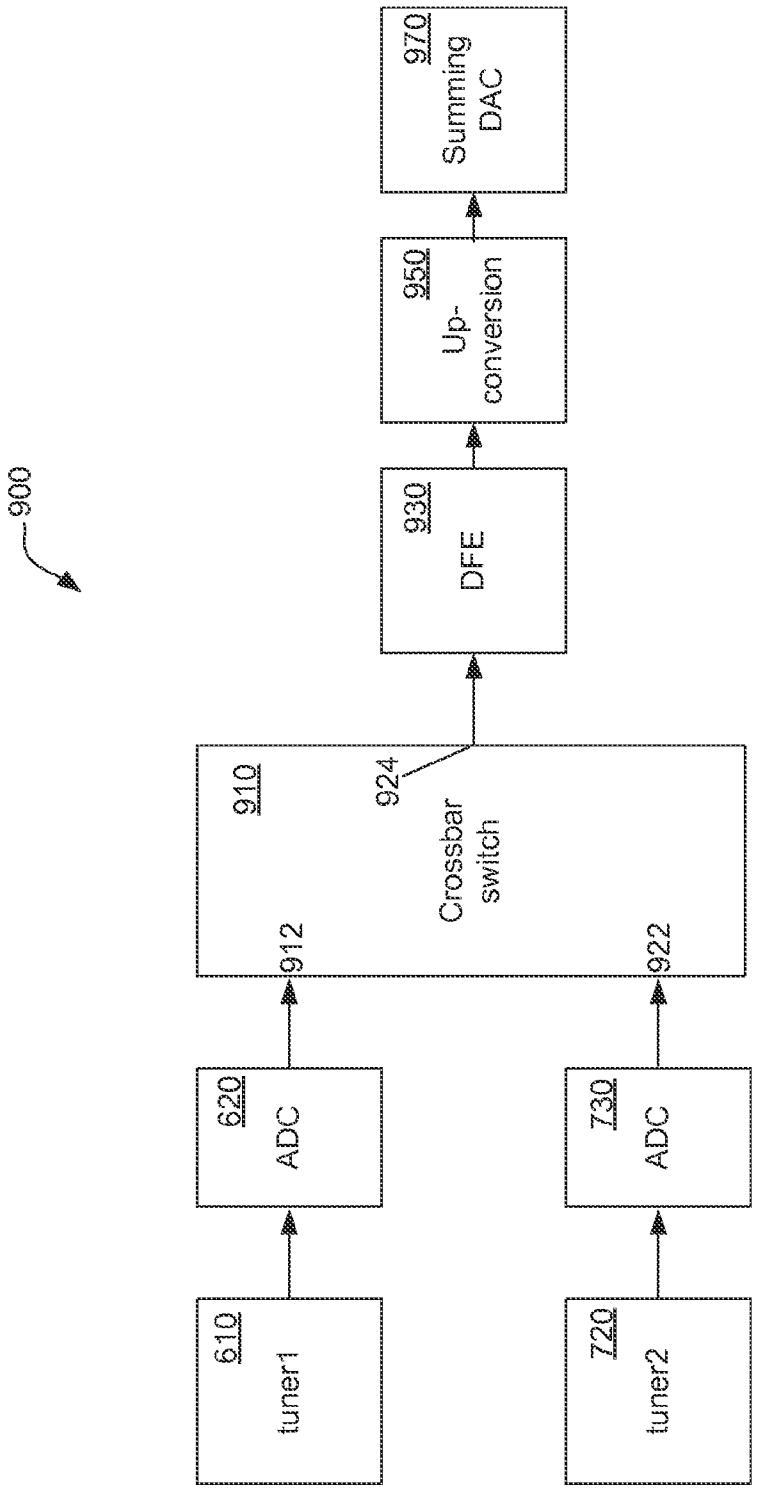
900
610
tuner1
620
ADC
720
tuner2
730
ADC
910
912
922
924
Crossbar switch
930
DFE
950
Up-conversion
970
Summing DAC

FIG. 9

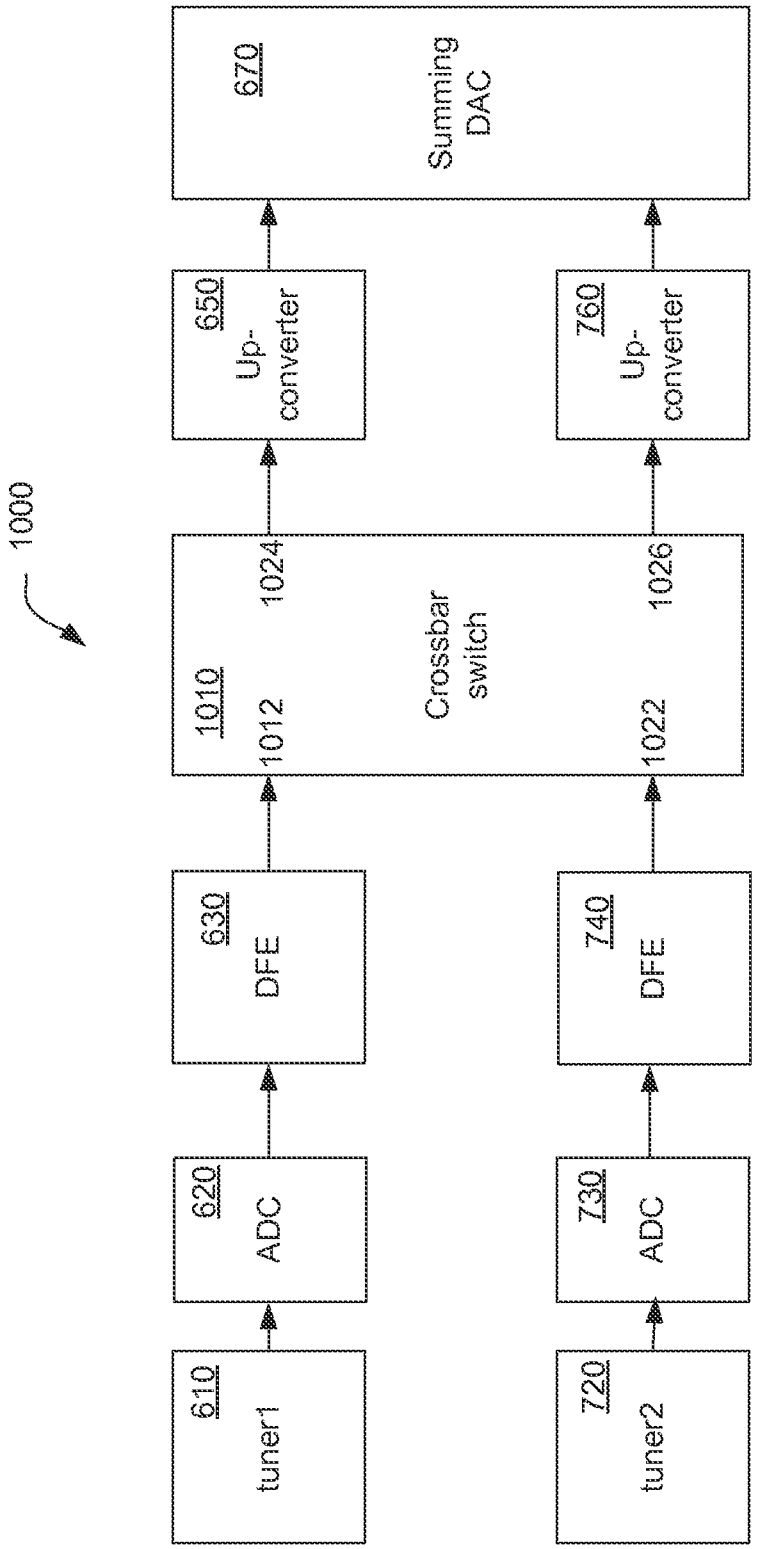
1000
610
tuner1
620
ADC
630
DFE
1010
1012
1024
Crossbar
switch
1022
1026
650
Up-
converter
670
Summing
DAC
720
tuner2
730
ADC
740
DFE
760
Up-
converter

FIG. 10

WIDEBAND TUNER ARCHITECTURE

PRIORITY CLAIM

This application is a continuation of U.S. patent application Ser. No. 13/962,871 filed on Aug. 8, 2013, which is a continuation of U.S. patent application Ser. No. 12/762,900 filed on Apr. 19, 2010 (now U.S. Pat. No. 8,526,898), which claims the benefit of priority to U.S. provisional application 61/170,526 filed Apr. 17, 2009. Each of the above referenced documents is hereby incorporated by reference in its entirety.

BACKGROUND

This invention relates to wideband receiver systems and methods having a wideband receiver that is capable of receiving multiple radio frequency channels located in a broad radio frequency spectrum. In particular, the invention relates to wideband receiver systems that are capable of receiving multiple desired television channels that extend over multiple non-contiguous portions of the broad frequency spectrum and grouping them into a contiguous, or substantially-contiguous, frequency spectrum.

Receivers used to down-convert and selectively filter TV channels are referred to as tuners, and tuners designed to concurrently receive several TV channels are referred to as wideband tuners. Existing tuners for these applications down-convert a swath of channels to an intermediate frequency, which are then sent to a demodulator. Because the swath of channels is not contiguous, this swath includes the desired channels as well as undesired channels. The demodulator employs a high-speed data converter to capture this swath of desired and undesired channels in the digital domain and subsequently filters out the desired channels.

In general, television channels broadcasted over the air or over cable networks are distributed across a broad frequency spectrum. That is, the channel frequencies may not be adjacent to each other. In certain applications such as DVR and picture-in-picture, the receiver system may have to concurrently receive several desired channels that may or may not be contiguous. The wideband receiver requirement poses a trade-off to the system to limit either the dynamic range of the wideband tuner or reduce the bandwidth covered by the tuner so that fewer channels may be received and processed by the demodulator.

FIG. **1** shows a conventional wideband tuner **100**. Tuner **100** may be a direct conversion tuner and includes a low noise amplifier LNA1 having an input terminal coupled to a radio frequency (RF) input signal **102** and an output terminal coupled to a mixer M1. The RF signal may include one or more television channels receiving from a cable network via an RF connector or wirelessly via an antenna. The RF input signal may include the VHF and UHF television channels in a terrestrial television broadcasting system or the CATV channels in cable networks. In order to receive all broadcasted channels present in the RF input signal, LNA1 must necessarily have a wide tuning range, high linearity, and low noise. Mixer M1 is coupled to a synthesizer S1 that can generate an oscillator frequency located around the center of the RF signal. Mixer M1 frequency down-converts the received RF input signal to a more convenient intermediate frequency (IF) band. Tuner **100** includes an amplifier V1 having a programmable gain for amplifying the IF signal, which is then band-pass filtered by a filter F1 before outputting to a demodulator.

In general, the RF signal includes multiple desired channels that are located in non-contiguous portions of a radio frequency spectrum. As shown in FIG. **1**, the swath of channels **110** occupies a bandwidth BW1 **120** at an RF center frequency f_{rfc} **130**. Synthesizer S1 may be tuned to a frequency around the center frequency f_{rfc} **130** for mixing channels **110** to an intermediate frequency f_{ifc} **160**, the frequency down-mixed channels **140** are amplified by amplifier V1 and then filtered by F1 to produce a swath of channels **170** centered around frequency f_{ifc} **160**. In an exemplary application shown in FIG. **1**, bandwidth BW1 contains 10 channels. In the case where channels are TV channels that are spaced at either 6 MHz or 8 MHz in most parts of the world, bandwidth BW1 **120** would span from 60-80 MHz, i.e., the down-converted bandwidth at the intermediate frequency would require a bandwidth equal to at least BW1, or at least 80 MHz when such architecture is used. It is noted that in other applications where the desired RF channels are located in the low band such as channels numbers 2 to 6 (VHF in the terrestrial TV broadcast or CATV) and in the high band such as channels numbers 14 to 83 of the UHF TV broadcast or channel numbers 63-158 of the CATV's ultra band, the bandwidth BW1 can be 800 MHz or higher. This wide bandwidth of 800 MHz would require a very expensive digital processing circuitry such as very high-speed analog to digital conversion and high-speed processor in the demodulator.

It is desirable to have wideband receiver systems that can increase the dynamic range without requiring expensive data conversion, filtering and channel selection at the demodulator.

BRIEF SUMMARY

An embodiment of the present invention includes a wideband receiver system that is configured to concurrently receive multiple radio frequency (RF) channels including a number of desired channels that are located in non-contiguous portions of a frequency spectrum and group the desired channels in a contiguous or substantially-contiguous frequency band at an intermediate frequency spectrum, where the term "substantially-contiguous" includes spacing the desired channels close to each other (e.g. as a fraction of the total system bandwidth, or relative to a channel bandwidth) but with a spacing that can be variable to accommodate the needs of overall system. The term "contiguous" heretofore encompasses "substantially-contiguous." The term "spacing" is referred to as the frequency difference between adjacent channels. The system includes a wideband receiver having a complex mixer module for down-shifting the multiple RF channels and transforming them to an in-phase signal and a quadrature signal in the baseband or low intermediate frequency (IF) band. The system further includes a wideband analog-to-digital converter module that digitizes the in-phase and quadrature signals. The digital in-phase and quadrature signals are provided to a digital frontend module that contains a bank of complex mixers that frequency-shift the number of desired channels to a baseband where the desired channels are individually filtered.

The digital frontend module may also include a decimator module that decimates the desired RF channels by a factor M before demodulating them to a digital data stream.

In certain embodiments of the present invention, the wideband receiver system additionally includes an up-converter module having multiple complex up-mixers, each of the complex up-mixers is configured to frequency up-shift each one of the desired RF channels to a sub-portion of an IF spectrum, wherein all sub-portions of the desired channels are adjacent to each another and form a contiguous frequency band in the IF spectrum. The act of frequency shifting the desired channels to the IF spectrum allows the wideband receiver system

to directly interface with commercially available demodulators. Allowing the spacing of the desired channels in the contiguous spectrum to be variable allows a system to optimize placement of these desired channels for the purposes of avoiding sensitive portions of the spectrum which may either be vulnerable to spurious signals and interference; or which may generate interference directly or as a harmonic product, to other systems.

In another embodiment of the present invention, a multi-tuner receiver system having two or more tuners is provided to receive multiple desired RF channels that extend over several non-contiguous sub-portions of a broad frequency spectrum and group them into a contiguous frequency spectrum. The multi-tuner system includes at least a first tuner that processes a first sub-portion of the broad frequency spectrum into a first in-phase signal and a first quadrature signal and a second tuner that processes a second sub-portion of the broad frequency spectrum into a second in-phase signal and a second quadrature signal. The multi-tuner receiver system further includes a first analog-to-digital converter module that digitizes the first in-phase and quadrature signals and a second analog-to-digital converter module that digitizes the second in-phase and quadrature signals. In addition, the multi-tuner system includes a first digital frontend module having a first number of complex mixers corresponding to a first number of the desired RF channels located in the first sub-portion of the broad frequency spectrum and a second digital frontend module having a second number of complex mixers corresponding to a second number of the desired RF channels located in the second sub-portion of the broad frequency spectrum. The first digital frontend module frequency shifts the first number of the desired RF channels to a first plurality of baseband signals and the second digital frontend module frequency shifts the second number of the desired RF channels to a second plurality of baseband signals.

The multi-tuner system further includes a first up-converter module having a plurality of N complex mixers, wherein N is an integer value equal to the number of desired channel. The first up-converter module frequency up-shifts the first plurality of the baseband signals to a first portion of an intermediate frequency. In addition, the multi-tuner system includes a second up-converter module that frequency up-shifts the second plurality of the baseband signals to a second portion of an intermediate frequency. The first and the second portions of the intermediate frequency are non-overlapping and located adjacent to each other to form a contiguous intermediate frequency (IF) band. The multi-tuner system further includes a digital-to-analog converter that converts the contiguous IF band to an analog waveform signal.

BRIEF DESCRIPTION OF THE DRAWINGS

FIG. **1** is a schematic block diagram of a conventional wideband tuner;

FIG. **2** is a schematic block diagram of a wideband receiver system according to an embodiment of the present invention;

FIG. **3** is a simplified circuit diagram of a complex down-mixer according to an embodiment of the present invention;

FIG. **4** is a simplified schematic block diagram of a wide-band receiver system according to another embodiment of the present invention;

FIG. **5** is a simplified circuit diagram of a complex up-mixer according to an embodiment of the present invention;

FIG. **6** is a simplified schematic block diagram of a wide-band multi-tuner receiver system according to an embodiment of the present invention;

FIG. **7** is a block diagram illustrating an exemplary digital front end according to an embodiment of the present invention in more detail;

FIG. **8** is a block diagram illustrating an exemplary tiled up-converter module according to an embodiment of the present invention in more detail;

FIG. **9** is a simplified block diagram of a wideband multi-tuner receiver system **900** according to an embodiment of the present invention; and

FIG. **10** is a simplified block diagram of a wideband multi-tuner receiver system **1000** according to another embodiment of the present invention.

DETAILED DESCRIPTION

FIG. **2** is a schematic block diagram of a wideband receiver system **200** according to an embodiment of the present invention. Wideband receiver system **200** includes a radio front end **210** and a digital front end **230**. Radio front end **210** may be a single very wide-band tuner receiver that captures the desired swath of channels located in non-contiguous portions of the spectrum having a frequency bandwidth BW1 **120**. In this example, the number of available channels in BW1 **120** is assumed to be 10 with each channel occupying an 8 MHz bandwidth for a total of 80 MHz. Radio front end **210** is shown as including a low noise amplifier LNA **202** having an input terminal configured to receive an RF input signal **102**. In the example shown, RF signal **102** includes four desired RF channels having the respective carrier frequency f_{rf1}, f_{rf2}, f_{rf3}, and f_{rf4} that are located in non-contiguous portions of the wide frequency spectrum BW1. It is understood, however, that spectrum BW1 **120** may have any other number of desired frequencies that are not contiguous. LNA **202** has a very low noise figure and very high linearity and a wide tuning range (i.e., very high IIP2 and IIP3 intercept points) to maximize a signal-to-noise-and distortion ratio (SNDR) at the amplifier output. LNA **202** may have a programmable gain to amplify RF signal **102** to adequate voltage levels for mixers M1 **211** and M2 **221**.

Mixers M1 **211** and M2 **221** may be conventional mixers formed using, for example, differential Gilbert cells. Each of the mixers **211** and **221** multiplies (mixes) an amplified RF signal **203** with a respective first oscillator frequency signal **205** and a second oscillator frequency signal **207** to generate an in-phase signal **212** and a quadrature signal **222** that have a phase shift of 90° degree between them. Mixers **211** and **221** are identical so that the amplitude of the in-phase signal **212** and quadrature signal **222** are the same. The first and second oscillator frequencies **205** and **207** are identical and have a 90° degree phase shift generated through a 90° degree phase shifter P1 **206**. Synthesizer S1 may be a single local oscillator operable to generate the oscillator frequency **205** for converting the receive RF signal **102** to a zero-IF or low-IF band. Synthesizer S1 can be a coarse (large step) phase locked loop. Synthesizer S1 can also be programmable to cover the wide-band frequency of the analog and digital terrestrial broadcast and/or the cable television system. The RF signal **102** may have relatively uniform signal strength in a cable network. However, its signal strength may extend in several orders of magnitude in a terrestrial broadcast system, thus, LNA **202** and/or mixers M1 **211**, M2 **221** are required to have a relatively high dynamic range to handle the large variations in the signal strength.

In-phase signal **212** and quadrature signal **222** are further amplified and filtered by respective amplifiers V1 **213**, V2 **223** and filters F1 **215**, F2 **225** to generate a filtered in-phase signal **216** and a filtered quadrature signal **226**. Filters F1 **215**

and F2 **225** may be passive or active low-pass filters to filter out any unwanted frequency components of the signals **214** and **224** before digitizing them for further processing in digital front end **230**. It is understood that the in-phase path **216** and the quadrature path **226** must have the same amplitude spectrum and maintain a fixed phase relationship, i.e., amplifiers V1 **213**, V2 **223** and filters F1 **215**, F2 **225** must be substantially identical. Because the two paths **216** and **226** are in quadrature, the spectral components from both positive and negative frequencies can be overlaid so that the bandwidth (cutoff frequency) of filters F1 **215** and F2 **225** can be one half of the BW1 bandwidth **120**.

Analog-to-digital converters ADC1 **218** and ADC2 **228** are high-speed (i.e., high sampling rate) converters to maximize the dynamic range. In an exemplary application, radio front end **210** operates as a nominal zero-IF down-mixer so that signals **216** and **226** have a nominal bandwidth **290** equal to one half of the RF signal bandwidth BW1 thanks to the complex down-mixer architecture. In other embodiment, radio front end **210** operates as a low-IF down-mixer so that the nominal bandwidth **290** of signals **216** and **226** is greater than one half of the bandwidth BW1. In practice, the sampling rate of ADC1 **218** and ADC2 **228** is chosen to be higher than the Nyquist sampling requirement, i.e., the filtered analog quadrature signals **216** and **226** may be over-sampled in order to reduce or avoid aliasing of undesired signals into the digitized I and Q signals.

ADC1 **218** generates a digital signal I **232** that is a digital representation of the analog filtered signal **216**; ADC2 **228** generates a digital signal Q **242** that is a digital representation of the analog filtered signal **226**. Digital signals I **232** and Q **242** are then applied to a bank of N complex mixers **250**, wherein N is an integer value corresponding to the number of desired RF channels located in the non-contiguous portions of the frequency spectrum BW1. It is understood that the number N can be any integer value. In one embodiment, N can be equal to the number of all available channels that exist in the licensed frequency spectrum to provide system flexibility. In other embodiments, N can be equal to the number of all receivable channels within a geographic area. In yet another embodiment, N can be an integer value less than the number of receivable channels with the geographic area to reduce system costs. In the exemplary embodiment shown in FIG. **2**, the number of desired channels is 4. That is, each of the 4 complex mixers **250** mixes in-phase and quadrature signals **232** and **242** with an associated frequency to generate a corresponding baseband, which is then individually filtered, decimated and provided to an associated demodulator.

Each of the N complex mixers **250** receives the digital signals I **232** and Q **242** from ADCs **218** and **228** to extract a different one of the desired channels and frequency-shifts the extracted signals to the baseband frequency. Each of the frequency shifted desired channels **252** is filtered by an associated filter module (identified as **260***a* to **260***n*). In an embodiment, each of the filtered signals **260***a* to **260***n* may be sent directly to an associated demodulator (identified as **270***a* to **270***n*) for extracting the original information transmitted in the associated desired channel. In another embodiment, each of the filtered signals **262***a* to **262***n* is further decimated before providing to a demodulator. A path of digital front end **230** is described in more detail below.

FIG. **3** is a simplified circuit diagram of one of the signal paths **272***a* to **272***n* of digital front end **230** shown in FIG. **2** according to an embodiment of the present invention. In an embodiment, digital signal I **232** may be further filtered by a filter **311** to obtain a filtered signal **312**. Similarly, digital signal Q **242** may be further filtered by a filter **321** to obtain a filtered signal **322**. Thus, digital signals **312** and **322** only contain low-frequency components with undesired high-frequency components being eliminated by respective filters **311** and **321**. It is noted that filtered signals **312** and **322** are interposed between the respective ADCs **218**, **228** and the bank of N complex mixers **250**.

Mixer **300**, which represents one of the N complex mixers **250**, includes four multipliers **313**, **315**, **323**, and **325**. Multipliers **313** and **315** multiply the filtered signal **312** with respective $\cos(\omega_{ci}t)$ and $\sin(\omega_{ci}t)$ signals and generate respective products **314** and **316**. Similarly, multipliers **323** and **325** multiply the filtered Q signal **322** with respective $\cos(\omega_{ci}t)$ and $\sin(\omega_{ci}t)$ signals and generate respective products **324** and **326**. An adder **317** sums the products **314** and **326** to generate a frequency-shifted signal I **318**. An adder **327** sums the products **324** and **316** to generate a frequency-shifted signal Q **328**. Basically, complex mixer **300** causes a frequency shift of the filtered components **312** and **322** to respective baseband signals **318** and **328** in the digital domain according to the operation:

$$Y(t)=X(t)*e^{-j\omega_c t} \tag{1}$$

or taken the Fourier transform, we obtain:

$$Y(\omega)=X(\omega-\omega_c) \tag{2}$$

Multipliers **313**, **315**, **323**, and **325** are identical digital multipliers. In an embodiment, a numerically controlled oscillator with quadrature output generates the $\cos(\omega_{ci}t)$ and $\sin(\omega_{ci}t)$ signals. Numerically controlled oscillators (NCO) can be implemented using a phase accumulator and a look-up table. NCOs are known to those of skill in the art and will not be described herein. The frequency ω_{ci} is so chosen that each one of the desired channels embedded in the digital signals I **232** and Q **242** will be downshifted to the baseband. In the given example shown in FIG. **2**, the bank of N complex mixers will have four complex mixers, each one of the N (i.e., four) complex mixers is coupled to an individual NCO having a distinct frequency ω_{ci} so that when mixing the filtered digital I and Q signals **312** and **322** with that frequency, each one of the complex mixers will generate the signals I (**318**) and Q (**328**) of a corresponding one of the desired channels at the baseband.

In an embodiment, baseband signals **318** and **328** are further individually filtered by respective filters **330** and **340** that are identified as one of the filters **260***a-n* in FIG. **2**. Filters **330** and **340** may be band-pass or low-pass filters having a narrow bandwidth equal to the bandwidth of a desired channel. In certain embodiments, filters **330** and **340** can be analog passive or active low-pass or complex band-pass filters such as polyphase filters. In another embodiment, filters **330** and **340** can be digital low-pass filters, such as finite impulse response (FIR) filters to eliminate high frequency components that may be aliased back to the baseband signals Ii (**332**) and Qi (**342**) when decimated by subsequent decimator **350**.

The reduced sampling rate of the N desired baseband channels will be sent as a serial or parallel digital data stream to a demodulator using a serial or parallel data interface according to commonly known methods, as shown in FIG. **2**. This approach provides several advantages over conventional tuner architectures. First, it eliminates the need of expensive data conversion, filtering and channel selection on the demodulator side. Second, it removes undesired channels from the signal path at an early stage, thus relieves the large dynamic range requirement in the demodulator.

FIG. **4** shows a simplified schematic block diagram of a wideband receiver system **400** according to another embodiment of the present invention. Wideband receiver system **400**

includes a radio front end **410**, a digital front end **430**, a tiled up-conversion module **450**, and a summing digital-to-analog converter module DAC **470**. Radio front end **410** includes a low noise amplifier LNA1 that receives an RF input signal **102** and provides an amplified RF signal **403** to mixers M1 **411** and M2 **421**. Mixer M1 **411** is coupled to an oscillator frequency **405** of a synthesizer S1 whereas mixer M2 **421** is coupled with the oscillator frequency **405** via a phase shifter P1 **406** that generates a 90° degree phase-shift to the oscillator frequency **405**. Mixers M1 **411** and M2 **421** generate respective in-phase signal **412** and quadrature signal **422** that are further amplified by respective amplifiers V1 **413** and V2 **423**. The amplified in-phase and quadrature signals **414**, **424** are then filtered by filters F1 **415** and F2 **425** to eliminate undesired frequency components that would be aliased back to the in-phase and quadrature signals when digitally sampled by subsequent analog-to-digital converters ADC1 **418** and ADC2 **428**. Digital signals I **422** and Q **442** at the input of digital front end **430** are digital representations of the filtered analog in-phase and quadrature signals **416**, **426** before the ADCs. Digital front end **430** include a bank of N complex mixers **432** comprising **432***a* to **432***n* identical mixers, where N is an integer value corresponding to the number of the desired channels located in non-contiguous portions of the frequency spectrum. Each of the N complex mixers **432***a* to **432***n* frequency down-converts signals I **432** and Q **442** to an associated baseband. Each of the frequency down-converted I and Q signals are coupled to respective low-pass, band-pass, or decimating filters **434**. In this regard, the radio front end **410** and the digital front end **430** are similar to respective radio front end **210** and digital front end **230** of FIG. **2** that have been described in detail above.

In an alternative embodiment of the present invention, the N filtered and decimated channels **438***a* to **438***n* (where indices a to n correspond to the associated number of desired channels) are not provided to a demodulator for demodulation. Instead, the N filtered and decimated channels **438***a* to **438***n* are further frequency up-converted to an intermediate frequency (IF) spectrum. In order to achieve that, the N filtered and decimated channels are coupled to a tiled up-conversion module **450** that includes a bank of N complex up-mixers, where N is an integer value correspond to the number of desired received channels. The N complex up-mixers include identical digital mixers **452***a* to **452***n* that will be described further in detail below with reference to FIG. **5**. The N up-shifted channels are then filtered by a subsequent bank of channel filters **454** that, in an embodiment, comprises N individual finite impulse response (FIR) filters. The N filtered channels are then digitally combined and converted to the analog domain by a summing digital-to-analog converter module DAC **470**. The N up-shifted channels are adjacent to each other and form a contiguous or substantially-contiguous set of channels **475** in the IF spectrum centered around f_{if} as illustrated in FIG. **4**. In an embodiment, the spectra of the mixed products are spaced in such a way so as to avoid overlap with known frequency bands containing potential or actual interferers. In another embodiment, the spectra of the mixed products are spaced in such a way so as to avoid overlap with frequency bands that might introduce interference to other systems. In general, because the bandwidth BW_2 is substantially lower than BW_1, the IF frequency f_{if} can be set proportionally lower, e.g., typically about 16 MHz to accommodate the spectrum of BW2 of up to 32 MHz (corresponding to the total bandwidth of the four desired channels, each having a bandwidth of 8 MHz in this example).

The up-conversion approach of FIG. **4** provides several advantages over conventional tuner architectures. First, it allows the demodulator to operate the data converter at a lower data rate and with lower resolution (fewer bits) due to the fact that the contiguous channels have a narrower bandwidth. Second, the up-conversion approach provides full compatibility with existing demodulators that require an analog IF signal. Third, it removes undesired channels from the signal path at an early stage, thus relieves the requirement of a high dynamic range requirement of the demodulator's analog-to-digital converter and the demodulator itself.

FIG. **5** shows a simplified exemplary circuit diagram of a complex up-mixer **500** according to an embodiment of the present invention. Up-mixer **500** is one of the N complex up-mixers **452***a* to **452***n* in tiled up-conversion module **450** shown in FIG. **4**. Up-mixer **500** includes filter **510** and **520** configured to eliminate unwanted frequency components present in respective input signals I **501** and Q **502**. Filtered signals **512** and **522** are provided to up-mixers UMI **515** and UMQ **525** that multiply the filtered signals **512** and **522** with respective $\cos(\omega_u t)$ and $\sin(\omega_u t)$. The products **516** and **526** are summed in an adder **530** to generate an IF signal **532** according to the following equation:

$$\mathrm{IF}(t)=I(t)*\cos(\omega_u t)+Q(t)*\sin(\omega_u t) \quad (3)$$

Up-mixers UMI **515** and UMQ **525** are identical digital multipliers that multiply the respective filtered signal **512** and **522** with a cosine function **505** and a sine function **506** that can be generated from a NCO using a digital phase accumulator and a look-up table.

As described above, TV channels are grouped into multiple frequency bands in North America. For example, channels 2 through 6 are grouped in VHF-low band (aka band I in Europe), channels 7 through 13 in VHF-high band (band III), and channels 14 through 69 in UHF band (bands IV and V). In order to receive such a wide frequency spectrum, the low noise amplifier and mixer must have very low noise, wide tuning range and high linearity as described above in the wideband receiver systems **200** and **400**. However, a wideband receiver having a single tuner with high sensitivity may have a high power consumption. For certain applications, it may be advantageous to use multiple tuners that are optimized for a given frequency band, such as a dedicated tuner for the low VHF band, another dedicated tuner for the high VHF band and the UHF band, and yet other dedicated tuners for receiving the digital video broadcasting (DVB) via satellite (DVB-S), via cable (DVB-C), or terrestrial digital video broadcasting (DVB-T). The multi-tuner approach may also be advantageously applied to cable networks that carry TV programs on an 88 MHz to 860 MHz according to the Data Over Cable Service Interface Specification (DOCSIS) protocol.

FIG. **6** shows a simplified schematic block diagram of a wideband multi-tuner receiver system **600** according to an embodiment of the present invention. In an embodiment, multi-tuner system **600** includes low noise amplifier A1 **602** for receiving an RF input signal **601**. Amplifier A1 **602** is coupled to at least a tuner1 **610** and a tuner2 **720**. In another embodiment, multi-tuner system **600** may not include amplifier **602** so that RF input signal **601** can be received directly at each tuner **610** and **720**.

Tuner1 **610** includes an amplifying filter AF1 **613** that filters and amplifies a first portion BWtuner1 **604** of a broad frequency spectrum **608** that contains a first plurality of RF channels **606** including desired channels **607** having respective channel frequencies f_{rf1} and f_{rf2}. The first portion of the broad frequency spectrum BWtuner1 **604** is then frequency down-converted to a low-IF or zero-IF in-phase signal I1 **612** and a quadrature signal Q1 **622** through respective mixer M1

611 and M2 621. Signals I1 612 and Q1 622 are further amplified and low-pass filtered before applying to respective analog-to-digital converters ADC1 618 and ADC2 628 that convert analog signals Ia1 616 and Qa1 626 to respective digital in-phase signal Id1 631 and digital quadrature signal Qd1 641. Because tuner1 610 only covers a portion BWtuner1 604 of the entire frequency spectrum 608 having fewer channels, the ADC1 618 and ADC2 628 can be slower-speed analog-to-digital converters with a large number of bits, i.e., large dynamic range.

Digital signals Id1 631 and Qd1 641 are then provided to a digital front end DFE 630 that includes a first bank of N complex mixers 632 and channel and decimating filters 634. The first bank of N complex filters 632 has N identical complex mixers, where N is an integer value equal to the number of desired channels located in the first portion BWtuner1 604 of the broad frequency spectrum 608. In an embodiment, each one of the first bank of N complex mixers includes four digital mixers that multiply digital stream Id1 631 and Qd1 641 with respective digitized cosine function and sine function to generate the sum and difference frequency components, as shown in FIG. 3. The digitized cosine and sine frequency, i.e., the mixer frequency is so chosen so that when mixing signals Id1 631 and Qd1 641 will move them to a baseband or a low-IF band. In an embodiment, channel and decimating filters have similar structures as filters 330 and 340 and demodulator 350 as shown in FIG. 3. That is, channel and decimating filters include digital low-pass filters 330 and 340 that eliminates unwanted high frequency components of the baseband signals I and Q prior to applying them to a decimator 350 (FIG. 3) that reduces the sample frequency without any loss of information since Id1 631 and Qd1 641 are sampled at a much higher frequency by the respective ADC1 618 and ADC2 628.

The decimated desired channels are then provided to an up-converter module 650 that includes a bank of N up-mixers. The bank of N up-mixers includes N identical up-mixers whose structure is shown in FIG. 5. In an embodiment, N is an integer value equal to the number of desired channels present in BWtuner1 604. Each one of the up-mixer frequency-shifts the baseband signals I and Q of each one of the desired channels to an appropriate portion of the intermediate frequency band according to Equation (3). In other words, the bank of N up-mixers is "frequency multiplexing" the desired channels onto a first portion 682 of an IF band 686.

Similarly, tuner2 720 includes an amplifying filter AF2 713 that is configured to receive a second portion BWtuner2 704 of the broad frequency spectrum 608. The second portion 704 contains a second plurality of RF channels 706 including a second number of desired channels. In the exemplary illustration of FIG. 6, the second portion 704 has a frequency bandwidth of BWtuner2 that contains desired channels 707 having respective channel frequencies f_{rf3} and f_{rf4}. Tuner2 720 includes elements such as mixers M3 711, M4 721, amplifiers V3 714, V4 724, filters F3 715, F4 725 and analog-to-digital converters ADC3 731 and ADC4 741 that are substantially the same as the like-named elements of the signal path of tuner1 610. Thus, redundant description is omitted herein.

Digital in-phase signal Id2 731 and digital quadrature signal Qd2 741 are then provided to digital front end 740. Digital front end 740 includes a bank of L complex filters, where L is an integer value equal to the number of desired channels in the second portion BWtuner2 704 of the broad frequency spectrum 608. Each one of the bank of L complex filters is a digital complex mixer configured to transform the signals Id2 731 and Qd2 741 to baseband signals that are further filtered by individual digital low-pass filters such as FIR filters before decimated by a subsequent decimator. The elements of digital front end 740 are substantially similar to those described in digital front end 630. Thus, redundant description is omitted herein.

The decimated baseband I and Q channels are further provided to a subsequent up-conversion module 760 that performs a function substantially similar to that of the up-conversion module 650 already described above. The outputs of up-conversion module 650 and 760 can be tiled to generate a contiguous set of IF frequencies 682, 684 centered at f_{if} 686. In an embodiment, the outputs of up-conversion module 650 and 760 are digitally summed and converted to an analog signal by summing DAC 670. In another embodiment, the up-conversion modules 650 and 760 and the digital summing function 672 can be performed using an inverse discrete Fourier transform or an inverse Fast Fourier transform operation.

The multi-tuner architecture provides the flexibility that multiple commercially available tuners can be used without the need of designing a wideband tuner. For example, a tuner designed for a terrestrial broadcast digital TV can be used together with a tuner dedicated to receiving a cable signal and/or a tuner for receiving a satellite broadcast signal. The multi-tuner receiver system provides an additional advantage that other tuners can be added quickly to the system to accommodate any future applications. Additionally, the multi-tuner architecture allows the use of slower speed (i.e., lower cost) analog-to-digital converters with a larger number of bits for achieving large dynamic range.

FIG. 7 shows a block diagram of an exemplary digital front end of the invention in more detail. In an embodiment, in-phase signal Id2 731 and quadrature signal Qd2 741 at the output of respective ADC converters 718 and 728 are provided to each of the L complex mixers 732 comprising mixers 732A to 732L. A more detailed description of each of L complex mixers is shown in FIG. 3. Mixer 732A multiplies Id2 731 and Qd2 741 with a cosine signal and a sine signal that are generated from an NCO1 and produces an I-732A signal and a Q-732A signal that are further individually filtered by an FIR filter before decimating. The bank of L complex mixers corresponds to the block 732 in FIG. 6; and the set of FIR filters and decimator corresponds to the block 734 in FIG. 6. Each decimated pair of I-732*i*/M in the baseband, where the index "i" is from A to L, is further provided to a subsequent up-mixer for frequency-shifting to an intermediate frequency as shown in FIG. 8.

FIG. 8 shows an exemplary embodiment of a bank of L complex up-mixers according to the present invention. Each decimated pair of complex signals I-732*i*/M and Q-732*i*/M is provided to an associated complex up-mixer, whose frequency is so chosen that when mixing with the pair of complex signals I-732*i*/M and Q-732*i*/M will generate an associated channel at a predetermined sub-portion of the intermediate frequency band 686 (FIG. 6). A more detailed schematic block of one of the L up-mixers is described above together with FIG. 5.

FIG. 9 is a simplified block diagram of a wideband multi-tuner receiver system 900 according to an embodiment of the present invention. In an embodiment, system 900 includes a crossbar switch 910 having at least an input terminal 912 configured to receive signals from an analog-to-digital converter (ADC) 912 and an input terminal 922 configured to receive signals from an ADC 922. Crossbar switch 910 also includes an output terminal 924 that is coupled to a digital front end 930. In an embodiment, input terminals 912 and 922 of crossbar switch 910 have P inputs, where P is an integer value that is equal to the total number of desired channels received by tuner1 610 and tuner2 720. Output terminal 924

of crossbar switch **910** have Q outputs, where Q is an integer value that is equal to the total number of desired channels received by tuned **610** and tuner2 **720**.

In an embodiment, digital front end **930** may include a bank of R complex mixers that frequency shifts the received channels to a baseband. Digital front end **930** may combine digital front end **630** and **740** shown in FIG. **6**. Similarly, a tiled up-conversion module **950** may include up-converter modules **650** and **760** of FIG. **6**.

System **900** further includes a summing DAC that operates similarly as summing DAC **470** and **670** that have been described in detail in relation with respective FIG. **4** and FIG. **6** above. Thus, redundant description is omitted herein.

FIG. **10** is a simplified block diagram of a wideband multi-tuner receiver system **1000** according to another embodiment of the present invention. System **1000** includes at least tuner1 **610** coupled with digital front end **630** through an analog-to-digital converter **620** and tuner2 **720** coupled with digital front end **740** through an analog-to-digital converter **730**. System **1000** further includes a crossbar switch **1010** that is interposed between digital front ends **630**, **740** and up-conversion modules **650**, **760**. Crossbar switch **1010** includes an input terminal **1012** having S inputs coupled with DFE **630** and an input terminal **1022** having T inputs coupled with DFE **740**. In an embodiment, S is an integer value equal to the number of desired channels processed in DFE **630** and T is an integer value equal to the number of desired channels processed in DFE **740**. Crossbar switch **1010** further includes an output terminal **1024** having U outputs coupled with up-converter module **650** and an output terminal **1024** having V outputs coupled with up-converter module **760**. In an embodiment, the total number of the outputs U and V is equal to the sum of the inputs S and T. Thus, crossbar switch **1010** allows the routing of any channel from either DFE **630** or DFE **740** to up-converters **650** or **760**. It is understood that system **1000** is not as flexible as system **900** because DFE **630** and DFE **740** are already pre-assigned to respective tuner1 (**610**) and tuner2 (**720**). However, this pre-assigned arrangement allows a simpler implementation of crossbar switch **1010** that operates at lower speeds.

While several embodiments in accordance with the present invention have been described, it is to be understood that the above description is intended to be illustrative and not restrictive. Many embodiments will be apparent to those of skill in the art upon reviewing the above description. The scope of the invention should, therefore, be determined not with reference to the above description, but instead should be determined with reference to the appended claims along with their full scope of equivalents.

What is claimed is:

1. A wideband receiver system comprising:

a mixer module configured to downconvert a plurality of frequencies that comprises a plurality of desired television channels and a plurality of undesired television channels;

a wideband analog-to-digital converter (ADC) module configured to digitize said plurality of frequencies comprising said plurality of desired television channels and said plurality of undesired television channels;

digital circuitry configured to:

select said plurality of desired television channels from said digitized plurality of frequencies; and

output said selected plurality of television channels to a demodulator as a digital datastream.

2. The wideband receiver system of claim **1**, wherein said output of said digital datastream is via a serial interface.

3. The wideband receiver system of claim **1**, wherein said output of said digital datastream is via a parallel interface.

4. The wideband receiver system of claim **1**, wherein said mixer module comprises a first mixer configured to generate an in-phase signal and a second mixer configured to generate a quadrature signal.

5. The wideband receiver system of claim **1**, wherein said wideband analog-to-digital converter comprises:

a first ADC configured to generate a digital in-phase signal; and

a second ADC configured to generate a digital quadrature signal.

6. The wideband receiver system of claim **5**, wherein said digital circuitry comprises a plurality of complex mixers configured to frequency shift said selected plurality of desired television channels.

7. The wideband receiver system of claim **6**, wherein:

prior to said frequency shift, said selected plurality of desired television channels occupy non-contiguous portions of a frequency spectrum; and

after said frequency shift, said selected plurality of desired television channels occupy a contiguous frequency spectrum.

8. The wideband receiver system of claim **1**, wherein said digital circuitry comprises a plurality of channel filters configured to perform said selection of said plurality of desired television channels.

9. The wideband receiver system of claim **8**, wherein each one of said plurality of channel filters is a finite impulse response filter.

10. The wideband receiver system of claim **1**, wherein said digital circuitry comprises a decimator circuit configured to decimate one or more of said selected plurality of television channels prior to said output of said selected plurality of desired television channels.

11. A method comprising:

in a wideband receiver system:

downconverting, by a mixer module of said wideband receiver system, a plurality of frequencies that comprises a plurality of desired television channels and a plurality of undesired television channels;

digitizing, by a wideband analog-to-digital converter (ADC) module of said wideband receiver system, said plurality of frequencies comprising said plurality of desired television channels and said plurality of undesired television channels;

selecting, by digital circuitry of said wideband receiver system, said plurality of desired television channels from said digitized plurality of frequencies; and

outputting, by said digital circuitry of said wideband receiver system, said selected plurality of television channels to a demodulator as a digital datastream.

12. The method of claim **11**, comprising outputting, by said digital circuitry of said wideband receiver system, said digital datastream via a serial interface.

13. The method of claim **11**, comprising outputting, by said digital circuitry of said wideband receiver system, said digital datastream via a parallel interface.

14. The method of claim **11**, comprising:

generating, by a first mixer of said mixer module, an in-phase signal; and

generating, by a second mixer of said mixer module, a quadrature signal.

15. The method of claim **11**, comprising:

generating, via a first ADC of said wideband analog-to-digital converter, a digital in-phase signal; and

generating, via a second ADC of said wideband analog-to-digital converter, a digital quadrature signal.

16. The method of claim **15**, comprising frequency shifting said selected plurality of desired television channels via a plurality of complex mixers of said digital circuitry.

17. The method of claim **16**, wherein:

prior to said frequency shifting, said selected plurality of desired television channels occupy non-contiguous portions of a frequency spectrum; and

after said frequency shifting, said selected plurality of desired television channels occupy a contiguous frequency spectrum.

18. The method of claim **11**, wherein said digital circuitry comprises a plurality of channel filters configured to perform said selecting.

19. The method of claim **18**, wherein each one of said plurality of channel filters is a finite impulse response filter.

20. The method of claim **11**, comprising decimating, by said digital circuitry, one or more of said selected plurality of desired television channels prior to said outputting of said selected plurality of television channels.

* * * * *