8416462

THE UNITED STATES OF AMERICA

TO ALL TO WHOM THESE PRESENTS SHALL COME:

UNITED STATES DEPARTMENT OF COMMERCE

United States Patent and Trademark Office

September 26, 2023

THIS IS TO CERTIFY THAT ANNEXED IS A TRUE COPY FROM THE RECORDS OF THIS OFFICE OF THE FILE WRAPPER AND CONTENTS OF:

APPLICATION NUMBER: ***14/614,543***
FILING DATE: ***February 05, 2015***
PATENT NUMBER: ***9210362***
ISSUE DATE: ***December 08, 2015***

Certified by

Kathi

Performing the Functions and Duties of the
Under Secretary of Commerce
for Intellectual Property
and Director of the United States
Patent and Trademark Office

Doc Code: TRACK1.REQ
Document Description: TrackOne Request

PTO/AIA/424 (04-14)

CERTIFICATION AND REQUEST FOR PRIORITIZED EXAMINATION UNDER 37 CFR 1.102(e) (Page 1 of 1)

First Named Inventor:	Madhukar Reddy	Nonprovisional Application Number (if known):	
Title of Invention:	WIDEBAND TUNER ARCHITECTURE		

APPLICANT HEREBY CERTIFIES THE FOLLOWING AND REQUESTS PRIORITIZED EXAMINATION FOR THE ABOVE-IDENTIFIED APPLICATION.

1. The processing fee set forth in 37 CFR 1.17(i)(1) and the prioritized examination fee set forth in 37 CFR 1.17(c) have been filed with the request. The publication fee requirement is met because that fee, set forth in 37 CFR 1.18(d), is currently $0. The basic filing fee, search fee, and examination fee are filed with the request or have been already been paid. I understand that any required excess claims fees or application size fee must be paid for the application.
2. I understand that the application may not contain, or be amended to contain, more than four independent claims, more than thirty total claims, or any multiple dependent claims, and that any request for an extension of time will cause an outstanding Track I request to be dismissed.
3. The applicable box is checked below:

I. ☑ Original Application (Track One) - Prioritized Examination under § 1.102(e)(1)

i. (a) The application is an original nonprovisional utility application filed under 35 U.S.C. 111(a). This certification and request is being filed with the utility application via EFS-Web.

---OR---

(b) The application is an original nonprovisional plant application filed under 35 U.S.C. 111(a). This certification and request is being filed with the plant application in paper.

ii. An executed inventor's oath or declaration under 37 CFR 1.63 or 37 CFR 1.64 for each inventor, **or** the application data sheet meeting the conditions specified in 37 CFR 1.53(f)(3)(i) is filed with the application.

II. ☐ Request for Continued Examination - Prioritized Examination under § 1.102(e)(2)

i. A request for continued examination has been filed with, or prior to, this form.
ii. If the application is a utility application, this certification and request is being filed via EFS-Web.
iii. The application is an original nonprovisional utility application filed under 35 U.S.C. 111(a), or is a national stage entry under 35 U.S.C. 371.
iv. This certification and request is being filed prior to the mailing of a first Office action responsive to the request for continued examination.
v. No prior request for continued examination has been granted prioritized examination status under 37 CFR 1.102(e)(2).

Signature /Chad M. Gilles/	Date February 5, 2015
Name (Print/Typed) Chad M. Gilles	Practitioner Registration Number 60,590

Note: *This form must be signed in accordance with 37 CFR 1.33. See 37 CFR 1.4(d) for signature requirements and certifications. Submit multiple forms if more than one signature is required.**

☑ *Total of 1 forms are submitted.

Privacy Act Statement

The **Privacy Act of 1974 (P.L. 93-579)** requires that you be given certain information in connection with your submission of the attached form related to a patent application or patent. Accordingly, pursuant to the requirements of the Act, please be advised that: (1) the general authority for the collection of this information is 35 U.S.C. 2(b)(2); (2) furnishing of the information solicited is voluntary; and (3) the principal purpose for which the information is used by the U.S. Patent and Trademark Office is to process and/or examine your submission related to a patent application or patent. If you do not furnish the requested information, the U.S. Patent and Trademark Office may not be able to process and/or examine your submission, which may result in termination of proceedings or abandonment of the application or expiration of the patent.

The information provided by you in this form will be subject to the following routine uses:

1. The information on this form will be treated confidentially to the extent allowed under the Freedom of Information Act (5 U.S.C. 552) and the Privacy Act (5 U.S.C 552a). Records from this system of records may be disclosed to the Department of Justice to determine whether disclosure of these records is required by the Freedom of Information Act.
2. A record from this system of records may be disclosed, as a routine use, in the course of presenting evidence to a court, magistrate, or administrative tribunal, including disclosures to opposing counsel in the course of settlement negotiations.
3. A record in this system of records may be disclosed, as a routine use, to a Member of Congress submitting a request involving an individual, to whom the record pertains, when the individual has requested assistance from the Member with respect to the subject matter of the record.
4. A record in this system of records may be disclosed, as a routine use, to a contractor of the Agency having need for the information in order to perform a contract. Recipients of information shall be required to comply with the requirements of the Privacy Act of 1974, as amended, pursuant to 5 U.S.C. 552a(m).
5. A record related to an International Application filed under the Patent Cooperation Treaty in this system of records may be disclosed, as a routine use, to the International Bureau of the World Intellectual Property Organization, pursuant to the Patent Cooperation Treaty.
6. A record in this system of records may be disclosed, as a routine use, to another federal agency for purposes of National Security review (35 U.S.C. 181) and for review pursuant to the Atomic Energy Act (42 U.S.C. 218(c)).
7. A record from this system of records may be disclosed, as a routine use, to the Administrator, General Services, or his/her designee, during an inspection of records conducted by GSA as part of that agency's responsibility to recommend improvements in records management practices and programs, under authority of 44 U.S.C. 2904 and 2906. Such disclosure shall be made in accordance with the GSA regulations governing inspection of records for this purpose, and any other relevant (*i.e.*, GSA or Commerce) directive. Such disclosure shall not be used to make determinations about individuals.
8. A record from this system of records may be disclosed, as a routine use, to the public after either publication of the application pursuant to 35 U.S.C. 122(b) or issuance of a patent pursuant to 35 U.S.C. 151. Further, a record may be disclosed, subject to the limitations of 37 CFR 1.14, as a routine use, to the public if the record was filed in an application which became abandoned or in which the proceedings were terminated and which application is referenced by either a published application, an application open to public inspection or an issued patent.
9. A record from this system of records may be disclosed, as a routine use, to a Federal, State, or local law enforcement agency, if the USPTO becomes aware of a violation or potential violation of law or regulation.

Under the Paperwork Reduction Act of 1995, no persons are required to respond to a collection of information unless it contains a valid OMB control number.

Application Data Sheet 37 CFR 1.76	Attorney Docket Number	28427US04
	Application Number	
Title of Invention	WIDEBAND TUNER ARCHITECTURE	

The application data sheet is part of the provisional or nonprovisional application for which it is being submitted. The following form contains the bibliographic data arranged in a format specified by the United States Patent and Trademark Office as outlined in 37 CFR 1.76.
This document may be completed electronically and submitted to the Office in electronic format using the Electronic Filing System (EFS) or the document may be printed and included in a paper filed application.

Secrecy Order 37 CFR 5.2

☐ Portions or all of the application associated with this Application Data Sheet may fall under a Secrecy Order pursuant to 37 CFR 5.2 (Paper filers only. Applications that fall under Secrecy Order may not be filed electronically.)

Inventor Information:

Inventor 1 Remove

Legal Name

Prefix	Given Name	Middle Name	Family Name	Suffix
	Madhukar		Reddy	

Residence Information (Select One) ◉ US Residency ◯ Non US Residency ◯ Active US Military Service

City	Carlsbad	State/Province	CA	Country of Residence i	US

Mailing Address of Inventor:

Address 1	2051 Palomar Airport Rd.		
Address 2	Ste. 100		
City	Carlsbad	State/Province	CA
Postal Code	92011	Country i	US

Inventor 2 Remove

Legal Name

Prefix	Given Name	Middle Name	Family Name	Suffix
	Curtis		Ling	

Residence Information (Select One) ◉ US Residency ◯ Non US Residency ◯ Active US Military Service

City	Carlsbad	State/Province	CA	Country of Residence i	US

Mailing Address of Inventor:

Address 1	2051 Palomar Airport Rd.		
Address 2	Ste. 100		
City	Carlsbad	State/Province	CA
Postal Code	92011	Country i	US

Inventor 3 Remove

Legal Name

Prefix	Given Name	Middle Name	Family Name	Suffix
	Tim		Gallagher	

Residence Information (Select One) ◉ US Residency ◯ Non US Residency ◯ Active US Military Service

Under the Paperwork Reduction Act of 1995, no persons are required to respond to a collection of information unless it contains a valid OMB control number.

Application Data Sheet 37 CFR 1.76	Attorney Docket Number	28427US04
	Application Number	
Title of Invention	WIDEBAND TUNER ARCHITECTURE	

City	Carlsbad	**State/Province**	CA	**Country of Residence** i	US

Mailing Address of Inventor:

Address 1	2051 Palomar Airport Rd.		
Address 2	Ste. 100		
City	Carlsbad	**State/Province**	CA
Postal Code	92011	**Country** i	US

All Inventors Must Be Listed - Additional Inventor Information blocks may be generated within this form by selecting the **Add** button. Add

Correspondence Information:

Enter either Customer Number or complete the Correspondence Information section below. For further information see 37 CFR 1.33(a).

☐ **An Address is being provided for the correspondence Information of this application.**

Customer Number	23446		
Email Address	mhmpto@mcandrews-ip.com	Add Email	Remove Email

Application Information:

Title of the Invention	WIDEBAND TUNER ARCHITECTURE		
Attorney Docket Number	28427US04	**Small Entity Status Claimed**	☒
Application Type	Nonprovisional		
Subject Matter	Utility		
Total Number of Drawing Sheets (if any)	10	**Suggested Figure for Publication (if any)**	

Filing By Reference :

Only complete this section when filing an application by reference under 35 U.S.C. 111(c) and 37 CFR 1.57(a). Do not complete this section if application papers including a specification and any drawings are being filed. Any domestic benefit or foreign priority information must be provided in the appropriate section(s) below (i.e., "Domestic Benefit/National Stage Information" and "Foreign Priority Information").

For the purposes of a filing date under 37 CFR 1.53(b), the description and any drawings of the present application are replaced by this reference to the previously filed application, subject to conditions and requirements of 37 CFR 1.57(a).

Application number of the previously filed application	Filing date (YYYY-MM-DD)	Intellectual Property Authority or Country i

Publication Information:

☐ Request Early Publication (Fee required at time of Request 37 CFR 1.219)

☐ **Request Not to Publish.** I hereby request that the attached application not be published under 35 U.S.C. 122(b) and certify that the invention disclosed in the attached application **has not and will not** be the subject of an application filed in another country, or under a multilateral international agreement, that requires publication at eighteen months after filing.

Application Data Sheet 37 CFR 1.76	Attorney Docket Number	28427US04
	Application Number	
Title of Invention	WIDEBAND TUNER ARCHITECTURE	

Representative Information:

Representative information should be provided for all practitioners having a power of attorney in the application. Providing this information in the Application Data Sheet does not constitute a power of attorney in the application (see 37 CFR 1.32).
Either enter Customer Number or complete the Representative Name section below. If both sections are completed the customer Number will be used for the Representative Information during processing.

Please Select One:	◉ Customer Number	◯ US Patent Practitioner	◯ Limited Recognition (37 CFR 11.9)
Customer Number	23446		

Domestic Benefit/National Stage Information:

This section allows for the applicant to either claim benefit under 35 U.S.C. 119(e), 120, 121, or 365(c) or indicate National Stage entry from a PCT application. Providing this information in the application data sheet constitutes the specific reference required by 35 U.S.C. 119(e) or 120, and 37 CFR 1.78.
When referring to the current application, please leave the application number blank.

Prior Application Status	Pending				Remove
Application Number	Continuity Type	Prior Application Number	Filing Date (YYYY-MM-DD)		
	Continuation of	13962871	2013-08-08		
Prior Application Status	Patented				Remove
Application Number	Continuity Type	Prior Application Number	Filing Date (YYYY-MM-DD)	Patent Number	Issue Date (YYYY-MM-DD)
13962871	Continuation of	12762900	2010-04-19	8526898	2013-09-03
Prior Application Status	Expired				Remove
Application Number	Continuity Type	Prior Application Number	Filing Date (YYYY-MM-DD)		
12762900	Claims benefit of provisional	61170526	2009-04-17		

Additional Domestic Benefit/National Stage Data may be generated within this form by selecting the **Add** button. Add

Foreign Priority Information:

This section allows for the applicant to claim priority to a foreign application. Providing this information in the application data sheet constitutes the claim for priority as required by 35 U.S.C. 119(b) and 37 CFR 1.55(d). When priority is claimed to a foreign application that is eligible for retrieval under the priority document exchange program (PDX) [i] the information will be used by the Office to automatically attempt retrieval pursuant to 37 CFR 1.55(h)(1) and (2). Under the PDX program, applicant bears the ultimate responsibility for ensuring that a copy of the foreign application is received by the Office from the participating foreign intellectual property office, or a certified copy of the foreign priority application is filed, within the time period specified in 37 CFR 1.55(g)(1).

Remove

Application Number	Country [i]	Filing Date (YYYY-MM-DD)	Access Code [i] (if applicable)

Application Data Sheet 37 CFR 1.76	Attorney Docket Number	28427US04
	Application Number	
Title of Invention	WIDEBAND TUNER ARCHITECTURE	

Additional Foreign Priority Data may be generated within this form by selecting the **Add** button. Add

Statement under 37 CFR 1.55 or 1.78 for AIA (First Inventor to File) Transition Applications

☐ This application (1) claims priority to or the benefit of an application filed before March 16, 2013 and (2) also contains, or contained at any time, a claim to a claimed invention that has an effective filing date on or after March 16, 2013.
NOTE: By providing this statement under 37 CFR 1.55 or 1.78, this application, with a filing date on or after March 16, 2013, will be examined under the first inventor to file provisions of the AIA.

Authorization to Permit Access:

☒ Authorization to Permit Access to the Instant Application by the Participating Offices

If checked, the undersigned hereby grants the USPTO authority to provide the European Patent Office (EPO), the Japan Patent Office (JPO), the Korean Intellectual Property Office (KIPO), the World Intellectual Property Office (WIPO), and any other intellectual property offices in which a foreign application claiming priority to the instant patent application is filed access to the instant patent application. See 37 CFR 1.14(c) and (h). This box should not be checked if the applicant does not wish the EPO, JPO, KIPO, WIPO, or other intellectual property office in which a foreign application claiming priority to the instant patent application is filed to have access to the instant patent application.

In accordance with 37 CFR 1.14(h)(3), access will be provided to a copy of the instant patent application with respect to: 1) the instant patent application-as-filed; 2) any foreign application to which the instant patent application claims priority under 35 U.S.C. 119(a)-(d) if a copy of the foreign application that satisfies the certified copy requirement of 37 CFR 1.55 has been filed in the instant patent application; and 3) any U.S. application-as-filed from which benefit is sought in the instant patent application.

In accordance with 37 CFR 1.14(c), access may be provided to information concerning the date o f filing this Authorization.

Applicant Information:

Providing assignment information in this section does not substitute for compliance with any requirement of part 3 of Title 37 of CFR to have an assignment recorded by the Office.

Under the Paperwork Reduction Act of 1995, no persons are required to respond to a collection of information unless it contains a valid OMB control number.

Application Data Sheet 37 CFR 1.76	Attorney Docket Number	28427US04
	Application Number	
Title of Invention	WIDEBAND TUNER ARCHITECTURE	

Applicant 1 Remove

If the applicant is the inventor (or the remaining joint inventor or inventors under 37 CFR 1.45), this section should not be completed. The information to be provided in this section is the name and address of the legal representative who is the applicant under 37 CFR 1.43; or the name and address of the assignee, person to whom the inventor is under an obligation to assign the invention, or person who otherwise shows sufficient proprietary interest in the matter who is the applicant under 37 CFR 1.46. If the applicant is an applicant under 37 CFR 1.46 (assignee, person to whom the inventor is obligated to assign, or person who otherwise shows sufficient proprietary interest) together with one or more joint inventors, then the joint inventor or inventors who are also the applicant should be identified in this section.

Clear

◉ Assignee	○ Legal Representative under 35 U.S.C. 117	○ Joint Inventor
○ Person to whom the inventor is obligated to assign.	○ Person who shows sufficient proprietary interest	

If applicant is the legal representative, indicate the authority to file the patent application, the inventor is:

Name of the Deceased or Legally Incapacitated Inventor :

If the Applicant is an Organization check here. ☒

Organization Name	MaxLinear, Inc.		
Mailing Address Information For Applicant:			
Address 1	2051 Palomar Airport Rd.		
Address 2	Ste. 100		
City	Carlsbad	**State/Province**	CA
Country i	US	Postal Code	92011
Phone Number		Fax Number	
Email Address			

Additional Applicant Data may be generated within this form by selecting the Add button. Add

Assignee Information including Non-Applicant Assignee Information:

Providing assignment information in this section does not subsitute for compliance with any requirement of part 3 of Title 37 of CFR to have an assignment recorded by the Office.

Assignee 1

Complete this section if assignee information, including non-applicant assignee information, is desired to be included on the patent application publication . An assignee-applicant identified in the "Applicant Information" section will appear on the patent application publication as an applicant. For an assignee-applicant, complete this section only if identification as an assignee is also desired on the patent application publication.

Remove

If the Assignee or Non-Applicant Assignee is an Organization check here. ☐

Application Data Sheet 37 CFR 1.76	Attorney Docket Number	28427US04
	Application Number	
Title of Invention	WIDEBAND TUNER ARCHITECTURE	

Prefix	**Given Name**	Middle Name	**Family Name**	Suffix

Mailing Address Information For Assignee including Non-Applicant Assignee:

Address 1			
Address 2			
City		**State/Province**	
Country i		Postal Code	
Phone Number		Fax Number	
Email Address			

Additional Assignee or Non-Applicant Assignee Data may be generated within this form by selecting the Add button. Add

Signature:

Remove

NOTE: This form must be signed in accordance with 37 CFR 1.33. See 37 CFR 1.4 for signature requirements and certifications.

Signature	/Chad M. Gilles/			Date (YYYY-MM-DD)	2015-02-05
First Name	Chad	Last Name	Gilles	Registration Number	60590

Additional Signature may be generated within this form by selecting the Add button. Add

This collection of information is required by 37 CFR 1.76. The information is required to obtain or retain a benefit by the public which is to file (and by the USPTO to process) an application. Confidentiality is governed by 35 U.S.C. 122 and 37 CFR 1.14. This collection is estimated to take 23 minutes to complete, including gathering, preparing, and submitting the completed application data sheet form to the USPTO. Time will vary depending upon the individual case. Any comments on the amount of time you require to complete this form and/or suggestions for reducing this burden, should be sent to the Chief Information Officer, U.S. Patent and Trademark Office, U.S. Department of Commerce, P.O. Box 1450, Alexandria, VA 22313-1450. DO NOT SEND FEES OR COMPLETED FORMS TO THIS ADDRESS. **SEND TO: Commissioner for Patents, P.O. Box 1450, Alexandria, VA 22313-1450.**

Privacy Act Statement

The Privacy Act of 1974 (P.L. 93-579) requires that you be given certain information in connection with your submission of the attached form related to a patent application or patent. Accordingly, pursuant to the requirements of the Act, please be advised that: (1) the general authority for the collection of this information is 35 U.S.C. 2(b)(2); (2) furnishing of the information solicited is voluntary; and (3) the principal purpose for which the information is used by the U.S. Patent and Trademark Office is to process and/or examine your submission related to a patent application or patent. If you do not furnish the requested information, the U.S. Patent and Trademark Office may not be able to process and/or examine your submission, which may result in termination of proceedings or abandonment of the application or expiration of the patent.

The information provided by you in this form will be subject to the following routine uses:

1. The information on this form will be treated confidentially to the extent allowed under the Freedom of Information Act (5 U.S.C. 552) and the Privacy Act (5 U.S.C. 552a). Records from this system of records may be disclosed to the Department of Justice to determine whether the Freedom of Information Act requires disclosure of these records.

2. A record from this system of records may be disclosed, as a routine use, in the course of presenting evidence to a court, magistrate, or administrative tribunal, including disclosures to opposing counsel in the course of settlement negotiations.

3. A record in this system of records may be disclosed, as a routine use, to a Member of Congress submitting a request involving an individual, to whom the record pertains, when the individual has requested assistance from the Member with respect to the subject matter of the record.

4. A record in this system of records may be disclosed, as a routine use, to a contractor of the Agency having need for the information in order to perform a contract. Recipients of information shall be required to comply with the requirements of the Privacy Act of 1974, as amended, pursuant to 5 U.S.C. 552a(m).

5. A record related to an International Application filed under the Patent Cooperation Treaty in this system of records may be disclosed, as a routine use, to the International Bureau of the World Intellectual Property Organization, pursuant to the Patent C o o p eration Treaty.

6. A record in this system of records may be disclosed, as a routine use, to another federal agency for purposes of National Security review (35 U.S.C. 181) and for review pursuant to the Atomic Energy Act (42 U.S.C. 218(c)).

7. A record from this system of records may be disclosed, as a routine use, to the Administrator, General Services, or his/her designee, during an inspection of records conducted by GSA as part of that agency's responsibility to recommend improvements in records management practices and programs, under authority of 44 U.S.C. 2904 and 2906. Such disclosure shall be made in accordance with the GSA regulations governing inspection of records for this purpose, and any other relevant (i.e., GSA or Commerce) directive. Such disclosure shall not be used to make determinations about individuals.

8. A record from this system of records may be disclosed, as a routine use, to the public after either publication of the application pursuant to 35 U.S.C. 122(b) or issuance of a patent pursuant to 35 U.S.C. 151. Further, a record may be disclosed, subject to the limitations of 37 CFR 1.14, as a routine use, to the public if the record was filed in an application which became abandoned or in which the proceedings were terminated and which application is referenced by either a published application, an application open to public inspections or an issued patent.

9. A record from this system of records may be disclosed, as a routine use, to a Federal, State, or local law enforcement agency, if the USPTO becomes aware of a violation or potential violation of law or regulation.

WIDEBAND TUNER ARCHITECTURE

PRIORITY CLAIM

[0001] This application is a continuation of U.S. patent application 13/962,871 filed on August 08, 2013, which is a continuation of U.S. patent application 12/762,900 filed on April 14, 2010 (now U.S. Patent 8,526,898), which claims the benefit of priority to U.S. provisional application 61/170,526 filed April 17, 2009, now expired. Each of the above referenced documents is hereby incorporated by reference in its entirety.

BACKGROUND

[0002] This invention relates to wideband receiver systems and methods having a wideband receiver that is capable of receiving multiple radio frequency channels located in a broad radio frequency spectrum. In particular, the invention relates to wideband receiver systems that are capable of receiving multiple desired television channels that extend over multiple non-contiguous portions of the broad frequency spectrum and grouping them into a contiguous, or substantially-contiguous, frequency spectrum.

[0003] Receivers used to down-convert and selectively filter TV channels are referred to as tuners, and tuners designed to concurrently receive several TV channels are referred to as wideband tuners. Existing tuners for these applications down-convert a swath of channels to an intermediate frequency, which are then sent to a demodulator. Because the swath of channels is not contiguous, this swath includes the desired channels as well as undesired channels. The demodulator employs a high-speed data converter to capture this swath of desired and undesired channels in the digital domain and subsequently filters out the desired channels.

[0004] In general, television channels broadcasted over the air or over cable networks are distributed across a broad frequency spectrum. That is, the channel frequencies may not be adjacent to each other. In certain applications such as DVR and

picture-in-picture, the receiver system may have to concurrently receive several desired channels that may or may not be contiguous. The wideband receiver requirement poses a trade-off to the system to limit either the dynamic range of the wideband tuner or reduce the bandwidth covered by the tuner so that fewer channels may be received and processed by the demodulator.

[0005] FIG. 1 shows a conventional wideband tuner 100. Tuner 100 may be a direct conversion tuner and includes a low noise amplifier LNA1 having an input terminal coupled to a radio frequency (RF) input signal 102 and an output terminal coupled to a mixer M1. The RF signal may include one or more television channels receiving from a cable network via an RF connector or wirelessly via an antenna. The RF input signal may include the VHF and UHF television channels in a terrestrial television broadcasting system or the CATV channels in cable networks. In order to receive all broadcasted channels present in the RF input signal, LNA1 must necessarily have a wide tuning range, high linearity, and low noise. Mixer M1 is coupled to a synthesizer S1 that can generate an oscillator frequency located around the center of the RF signal. Mixer M1 frequency down-converts the received RF input signal to a more convenient intermediate frequency (IF) band. Tuner 100 includes an amplifier V1 having a programmable gain for amplifying the IF signal, which is then band-pass filtered by a filter F1 before outputting to a demodulator.

[0006] In general, the RF signal includes multiple desired channels that are located in non-contiguous portions of a radio frequency spectrum. As shown in FIG. 1, the swath of channels 110 occupies a bandwidth BW1 120 at an RF center frequency f_{rfc} 130. Synthesizer S1 may be tuned to a frequency around the center frequency f_{rfc} 130 for mixing channels 110 to an intermediate frequency f_{ifc} 160, the frequency down-mixed channels 140 are amplified by amplifier V1 and then filtered by F1 to produce a swath of channels 170 centered around frequency f_{ifc} 160. In an exemplary application shown in

FIG. 1, bandwidth BW1 contains 10 channels. In the case where channels are TV channels that are spaced at either 6 MHz or 8 MHz in most parts of the world, bandwidth BW1 120 would span from 60-80 MHz, i.e., the down-converted bandwidth at the intermediate frequency would require a bandwidth equal to at least BW1, or at least 80 MHz when such architecture is used. It is noted that in other applications where the desired RF channels are located in the low band such as channels numbers 2 to 6 (VHF in the terrestrial TV broadcast or CATV) and in the high band such as channels numbers 14 to 83 of the UHF TV broadcast or channel numbers 63-158 of the CATV's ultra band, the bandwidth BW1 can be 800 MHz or higher. This wide bandwidth of 800 MHz would require a very expensive digital processing circuitry such as very high-speed analog to digital conversion and high-speed processor in the demodulator.

[0007] It is desirable to have wideband receiver systems that can increase the dynamic range without requiring expensive data conversion, filtering and channel selection at the demodulator.

BRIEF SUMMARY

[0008] An embodiment of the present invention includes a wideband receiver system that is configured to concurrently receive multiple radio frequency (RF) channels including a number of desired channels that are located in non-contiguous portions of a frequency spectrum and group the desired channels in a contiguous or substantially-contiguous frequency band at an intermediate frequency spectrum, where the term "substantially-contiguous" includes spacing the desired channels close to each other (e.g. as a fraction of the total system bandwidth, or relative to a channel bandwidth) but with a spacing that can be variable to accommodate the needs of overall system. The term "contiguous" heretofore encompasses "substantially-contiguous." The term "spacing" is referred to as the frequency difference between adjacent channels. The system includes a wideband receiver having a complex mixer module for down-shifting the multiple RF channels and transforming them to an in-phase signal and a quadrature signal in the baseband or low intermediate frequency (IF) band. The system further includes a wideband analog-to-digital converter module that digitizes the in-phase and quadrature signals. The digital in-phase and quadrature signals are provided to a digital frontend module that contains a bank of complex mixers that frequency-shift the number of desired channels to a baseband where the desired channels are individually filtered.

[0009] The digital frontend module may also include a decimator module that decimates the desired RF channels by a factor M before demodulating them to a digital data stream.

[0010] In certain embodiments of the present invention, the wideband receiver system additionally includes an up-converter module having multiple complex up-mixers, each of the complex up-mixers is configured to frequency up-shift each one of the desired RF channels to a sub-portion of an IF spectrum, wherein all sub-portions of the desired channels are adjacent to each another and form a contiguous frequency band in the IF

spectrum. The act of frequency shifting the desired channels to the IF spectrum allows the wideband receiver system to directly interface with commercially available demodulators. Allowing the spacing of the desired channels in the contiguous spectrum to be variable allows a system to optimize placement of these desired channels for the purposes of avoiding sensitive portions of the spectrum which may either be vulnerable to spurious signals and interference; or which may generate interference directly or as a harmonic product, to other systems.

[0011] In another embodiment of the present invention, a multi-tuner receiver system having two or more tuners is provided to receive multiple desired RF channels that extend over several non-contiguous sub-portions of a broad frequency spectrum and group them into a contiguous frequency spectrum. The multi-tuner system includes at least a first tuner that processes a first sub-portion of the broad frequency spectrum into a first in-phase signal and a first quadrature signal and a second tuner that processes a second sub-portion of the broad frequency spectrum into a second in-phase signal and a second quadrature signal. The multi-tuner receiver system further includes a first analog-to-digital converter module that digitizes the first in-phase and quadrature signals and a second analog-to-digital converter module that digitizes the second in-phase and quadrature signals. In addition, the multi-tuner system includes a first digital frontend module having a first number of complex mixers corresponding to a first number of the desired RF channels located in the first sub-portion of the broad frequency spectrum and a second digital frontend module having a second number of complex mixers corresponding to a second number of the desired RF channels located in the second sub-portion of the broad frequency spectrum. The first digital frontend module frequency shifts the first number of the desired RF channels to a first plurality of baseband signals and the second digital frontend module frequency shifts the second number of the desired RF channels to a second plurality of baseband signals.

[0012] The multi-tuner system further includes a first up-converter module having a plurality of N complex mixers, wherein N is an integer value equal to the number of desired channel. The first up-converter module frequency up-shifts the first plurality of the baseband signals to a first portion of an intermediate frequency. In addition, the multi-tuner system includes a second up-converter module that frequency up-shifts the second plurality of the baseband signals to a second portion of an intermediate frequency. The first and the second portions of the intermediate frequency are non-overlapping and located adjacent to each other to form a contiguous intermediate frequency (IF) band. The multi-tuner system further includes a digital-to-analog converter that converts the contiguous IF band to an analog waveform signal.

BRIEF DESCRIPTION OF THE DRAWINGS

[0013] FIG. 1 is a schematic block diagram of a conventional wideband tuner;

[0014] FIG. 2 is a schematic block diagram of a wideband receiver system according to an embodiment of the present invention;

[0015] FIG. 3 is a simplified circuit diagram of a complex down-mixer according to an embodiment of the present invention;

[0016] FIG. 4 is a simplified schematic block diagram of a wideband receiver system according to another embodiment of the present invention;

[0017] FIG. 5 is a simplified circuit diagram of a complex up-mixer according to an embodiment of the present invention;

[0018] FIG. 6 is a simplified schematic block diagram of a wideband multi-tuner receiver system according to an embodiment of the present invention;

[0019] FIG. 7 is a block diagram illustrating an exemplary digital front end according to an embodiment of the present invention in more detail;

[0020] FIG. 8 is a block diagram illustrating an exemplary tiled up-converter module according to an embodiment of the present invention in more detail;

[0021] FIG. 9 is a simplified block diagram of a wideband multi-tuner receiver system 900 according to an embodiment of the present invention; and

[0022] FIG. 10 is a simplified block diagram of a wideband multi-tuner receiver system 1000 according to another embodiment of the present invention.

DETAILED DESCRIPTION

[0023] FIG. 2 is a schematic block diagram of a wideband receiver system 200 according to an embodiment of the present invention. Wideband receiver system 200 includes a radio front end 210 and a digital front end 230. Radio front end 210 may be a single very wide-band tuner receiver that captures the desired swath of channels located in non-contiguous portions of the spectrum having a frequency bandwidth BW1 120. In this example, the number of available channels in BW1 120 is assumed to be 10 with each channel occupying an 8 MHz bandwidth for a total of 80 MHz. Radio front end 210 is shown as including a low noise amplifier LNA 202 having an input terminal configured to receive an RF input signal 102. In the example shown, RF signal 102 includes four desired RF channels having the respective carrier frequency f_{rf1}, f_{rf2}, f_{rf3}, and f_{rf4} that are located in non-contiguous portions of the wide frequency spectrum BW1. It is understood, however, that spectrum BW1 120 may have any other number of desired frequencies that are not contiguous. LNA 202 has a very low noise figure and very high linearity and a wide tuning range (i.e., very high IIP2 and IIP3 intercept points) to maximize a signal-to-noise-and distortion ratio (SNDR) at the amplifier output. LNA 202 may have a programmable gain to amplify RF signal 102 to adequate voltage levels for mixers M1 211 and M2 221.

[0024] Mixers M1 211 and M2 221 may be conventional mixers formed using, for example, differential Gilbert cells. Each of the mixers 211 and 221 multiplies (mixes) an amplified RF signal 203 with a respective first oscillator frequency signal 205 and a second oscillator frequency signal 207 to generate an in-phase signal 212 and a quadrature signal 222 that have a phase shift of 90° degree between them. Mixers 211 and 221 are identical so that the amplitude of the in-phase signal 212 and quadrature signal 222 are the same. The first and second oscillator frequencies 205 and 207 are identical and have a 90° degree phase shift generated through a 90° degree phase shifter P1 206. Synthesizer S1 may be a single local oscillator operable to generate the oscillator

frequency 205 for converting the receive RF signal 102 to a zero-IF or low-IF band. Synthesizer S1 can be a coarse (large step) phase locked loop. Synthesizer S1 can also be programmable to cover the wideband frequency of the analog and digital terrestrial broadcast and/or the cable television system. The RF signal 102 may have relatively uniform signal strength in a cable network. However, its signal strength may extend in several orders of magnitude in a terrestrial broadcast system, thus, LNA 202 and/or mixers M1 211, M2 221 are required to have a relatively high dynamic range to handle the large variations in the signal strength.

[0025] In-phase signal 212 and quadrature signal 222 are further amplified and filtered by respective amplifiers V1 213, V2 223 and filters F1 215, F2 225 to generate a filtered in-phase signal 216 and a filtered quadrature signal 226. Filters F1 215 and F2 225 may be passive or active low-pass filters to filter out any unwanted frequency components of the signals 214 and 224 before digitizing them for further processing in digital front end 230. It is understood that the in-phase path 216 and the quadrature path 226 must have the same amplitude spectrum and maintain a fixed phase relationship, i.e., amplifiers V1 213, V2 223 and filters F1 215, F2 225 must be substantially identical. Because the two paths 216 and 226 are in quadrature, the spectral components from both positive and negative frequencies can be overlaid so that the bandwidth (cutoff frequency) of filters F1 215 and F2 225 can be one half of the BW1 bandwidth 120.

[0026] Analog-to-digital converters ADC1 218 and ADC2 228 are high-speed (i.e., high sampling rate) converters to maximize the dynamic range. In an exemplary application, radio front end 210 operates as a nominal zero-IF down-mixer so that signals 216 and 226 have a nominal bandwidth 290 equal to one half of the RF signal bandwidth BW1 thanks to the complex down-mixer architecture. In other embodiment, radio front end 210 operates as a low-IF down-mixer so that the nominal bandwidth 290 of signals 216 and 226 is greater than one half of the bandwidth BW1. In practice, the sampling rate

of ADC1 218 and ADC2 228 is chosen to be higher than the Nyquist sampling requirement, i.e., the filtered analog quadrature signals 216 and 226 may be over-sampled in order to reduce or avoid aliasing of undesired signals into the digitized I and Q signals.

[0027] ADC1 218 generates a digital signal I 232 that is a digital representation of the analog filtered signal 216; ADC2 228 generates a digital signal Q 242 that is a digital representation of the analog filtered signal 226. Digital signals I 232 and Q 242 are then applied to a bank of N complex mixers 250, wherein N is an integer value corresponding to the number of desired RF channels located in the non-contiguous portions of the frequency spectrum BW1. It is understood that the number N can be any integer value. In one embodiment, N can be equal to the number of all available channels that exist in the licensed frequency spectrum to provide system flexibility. In other embodiments, N can be equal to the number of all receivable channels within a geographic area. In yet another embodiment, N can be an integer value less than the number of receivable channels with the geographic area to reduce system costs. In the exemplary embodiment shown in FIG. 2, the number of desired channels is 4. That is, each of the 4 complex mixers 250 mixes in-phase and quadrature signals 232 and 242 with an associated frequency to generate a corresponding baseband, which is then individually filtered, decimated and provided to an associated demodulator.

[0028] Each of the N complex mixers 250 receives the digital signals I 232 and Q 242 from ADCs 218 and 228 to extract a different one of the desired channels and frequency-shifts the extracted signals to the baseband frequency. Each of the frequency shifted desired channels 252 is filtered by an associated filter module (identified as 260a to 260n). In an embodiment, each of the filtered signals 260a to 260n may be sent directly to an associated demodulator (identified as 270a to 270n) for extracting the original information transmitted in the associated desired channel. In another embodiment, each

of the filtered signals 262a to 262n is further decimated before providing to a demodulator. A path of digital front end 230 is described in more detail below.

[0029] FIG. 3 is a simplified circuit diagram of one of the signal paths 272a to 272n of digital front end 230 shown in FIG. 2 according to an embodiment of the present invention. In an embodiment, digital signal I 232 may be further filtered by a filter 311 to obtain a filtered signal 312. Similarly, digital signal Q 242 may be further filtered by a filter 321 to obtain a filtered signal 322. Thus, digital signals 312 and 322 only contain low-frequency components with undesired high-frequency components being eliminated by respective filters 311 and 321. It is noted that filtered signals 312 and 322 are interposed between the respective ADCs 218, 228 and the bank of N complex mixers 250.

[0030] Mixer 300, which represents one of the N complex mixers 250, includes four multipliers 313, 315, 323, and 325. Multipliers 313 and 315 multiply the filtered signal 312 with respective $\cos(\omega_{ci}t)$ and $\sin(\omega_{ci}t)$ signals and generate respective products 314 and 316. Similarly, multipliers 323 and 325 multiply the filtered Q signal 322 with respective $\cos(\omega_{ci}t)$ and $\sin(\omega_{ci}t)$ signals and generate respective products 324 and 326. An adder 317 sums the products 314 and 326 to generate a frequency-shifted signal I 318. An adder 327 sums the products 324 and 316 to generate a frequency-shifted signal Q 328. Basically, complex mixer 300 causes a frequency shift of the filtered components 312 and 322 to respective baseband signals 318 and 328 in the digital domain according to the operation:

$$Y(t) = X(t) * e^{-j\omega_c t} \qquad (1)$$

or taken the Fourier transform, we obtain:

$$Y(\omega)=X(\omega-\omega_c) \qquad (2)$$

[0031] Multipliers 313, 315, 323, and 325 are identical digital multipliers. In an embodiment, a numerically controlled oscillator with quadrature output generates the $\cos(\omega_{ci}t)$ and $\sin(\omega_{ci}t)$ signals. Numerically controlled oscillators (NCO) can be implemented using a phase accumulator and a look-up table. NCOs are known to those of skill in the art and will not be described herein. The frequency ω_{ci} is so chosen that each one of the desired channels embedded in the digital signals I 232 and Q 242 will be downshifted to the baseband. In the given example shown in FIG. 2, the bank of N complex mixers will have four complex mixers, each one of the N (i.e., four) complex mixers is coupled to an individual NCO having a distinct frequency ω_{ci} so that when mixing the filtered digital I and Q signals 312 and 322 with that frequency, each one of the complex mixers will generate the signals I (318) and Q (328) of a corresponding one of the desired channels at the baseband.

[0032] In an embodiment, baseband signals 318 and 328 are further individually filtered by respective filters 330 and 340 that are identified as one of the filters 260a-n in FIG. 2. Filters 330 and 340 may be band-pass or low-pass filters having a narrow bandwidth equal to the bandwidth of a desired channel. In certain embodiments, filters 330 and 340 can be analog passive or active low-pass or complex band-pass filters such as polyphase filters. In another embodiment, filters 330 and 340 can be digital low-pass filters, such as finite impulse response (FIR) filters to eliminate high frequency components that may be aliased back to the baseband signals Ii (332) and Qi (342) when decimated by subsequent decimator 350.

[0033] The reduced sampling rate of the N desired baseband channels will be sent as a serial or parallel digital data stream to a demodulator using a serial or parallel data interface according to commonly known methods, as shown in FIG. 2. This approach provides several advantages over conventional tuner architectures. First, it eliminates the need of expensive data conversion, filtering and channel selection on the demodulator

side. Second, it removes undesired channels from the signal path at an early stage, thus relieves the large dynamic range requirement in the demodulator.

[0034] FIG. 4 shows a simplified schematic block diagram of a wideband receiver system 400 according to another embodiment of the present invention. Wideband receiver system 400 includes a radio front end 410, a digital front end 430, a tiled up-conversion module 450, and a summing digital-to-analog converter module DAC 470. Radio front end 410 includes a low noise amplifier LNA1 that receives an RF input signal 102 and provides an amplified RF signal 403 to mixers M1 411 and M2 421. Mixer M1 411 is coupled to an oscillator frequency 405 of a synthesizer S1 whereas mixer M2 421 is coupled with the oscillator frequency 405 via a phase shifter P1 406 that generates a 90° degree phase-shift to the oscillator frequency 405. Mixers M1 411 and M2 421 generate respective in-phase signal 412 and quadrature signal 422 that are further amplified by respective amplifiers V1 413 and V2 423. The amplified in-phase and quadrature signals 414, 424 are then filtered by filters F1 415 and F2 425 to eliminate undesired frequency components that would be aliased back to the in-phase and quadrature signals when digitally sampled by subsequent analog-to-digital converters ADC1 418 and ADC2 428. Digital signals I 422 and Q 442 at the input of digital front end 430 are digital representations of the filtered analog in-phase and quadrature signals 416, 426 before the ADCs. Digital front end 430 include a bank of N complex mixers 432 comprising 432a to 432n identical mixers, where N is an integer value corresponding to the number of the desired channels located in non-contiguous portions of the frequency spectrum. Each of the N complex mixers 432a to 432n frequency down-converts signals I 432 and Q 442 to an associated baseband. Each of the frequency down-converted I and Q signals are coupled to respective low-pass, band-pass, or decimating filters 434. In this regard, the radio front end 410 and the digital front end 430 are similar to respective radio front end 210 and digital front end 230 of FIG. 2 that have been described in detail above.

[0035] In an alternative embodiment of the present invention, the N filtered and decimated channels 438a to 438n (where indices a to n correspond to the associated number of desired channels) are not provided to a demodulator for demodulation. Instead, the N filtered and decimated channels 438a to 438n are further frequency up-converted to an intermediate frequency (IF) spectrum. In order to achieve that, the N filtered and decimated channels are coupled to a tiled up-conversion module 450 that includes a bank of N complex up-mixers, where N is an integer value correspond to the number of desired received channels. The N complex up-mixers include identical digital mixers 452a to 452n that will be described further in detail below with reference to FIG. 5. The N up-shifted channels are then filtered by a subsequent bank of channel filters 454 that, in an embodiment, comprises N individual finite impulse response (FIR) filters. The N filtered channels are then digitally combined and converted to the analog domain by a summing digital-to-analog converter module DAC 470. The N up-shifted channels are adjacent to each other and form a contiguous or substantially-contiguous set of channels 475 in the IF spectrum centered around f_{if} as illustrated in FIG. 4. In an embodiment, the spectra of the mixed products are spaced in such a way so as to avoid overlap with known frequency bands containing potential or actual interferers. In another embodiment, the spectra of the mixed products are spaced in such a way so as to avoid overlap with frequency bands that might introduce interference to other systems. In general, because the bandwidth BW_2 is substantially lower than BW_1, the IF frequency f_{if} can be set proportionally lower, e.g., typically about 16 MHz to accommodate the spectrum of BW2 of up to 32 MHz (corresponding to the total bandwidth of the four desired channels, each having a bandwidth of 8 MHz in this example).

[0036] The up-conversion approach of FIG. 4 provides several advantages over conventional tuner architectures. First, it allows the demodulator to operate the data converter at a lower data rate and with lower resolution (fewer bits) due to the fact that the contiguous channels have a narrower bandwidth. Second, the up-conversion approach

provides full compatibility with existing demodulators that require an analog IF signal. Third, it removes undesired channels from the signal path at an early stage, thus relieves the requirement of a high dynamic range requirement of the demodulator's analog-to-digital converter and the demodulator itself.

[0037] FIG. 5 shows a simplified exemplary circuit diagram of a complex up-mixer 500 according to an embodiment of the present invention. Up-mixer 500 is one of the N complex up-mixers 452a to 452n in tiled up-conversion module 450 shown in FIG. 4. Up-mixer 500 includes filter 510 and 520 configured to eliminate unwanted frequency components present in respective input signals I 501 and Q 502. Filtered signals 512 and 522 are provided to up-mixers UMI 515 and UMQ 525 that multiply the filtered signals 512 and 522 with respective $\cos(\omega_u t)$ and $\sin(\omega_u t)$. The products 516 and 526 are summed in an adder 530 to generate an IF signal 532 according to the following equation:

$$IF(t)=I(t)*\cos(\omega_u t)+Q(t)*\sin(\omega_u t) \qquad (3)$$

[0038] Up-mixers UMI 515 and UMQ 525 are identical digital multipliers that multiply the respective filtered signal 512 and 522 with a cosine function 505 and a sine function 506 that can be generated from a NCO using a digital phase accumulator and a look-up table.

[0039] As described above, TV channels are grouped into multiple frequency bands in North America. For example, channels 2 through 6 are grouped in VHF-low band (aka band I in Europe), channels 7 through 13 in VHF-high band (band III), and channels 14 through 69 in UHF band (bands IV and V). In order to receive such a wide frequency spectrum, the low noise amplifier and mixer must have very low noise, wide tuning range and high linearity as described above in the wideband receiver systems 200 and 400. However, a wideband receiver having a single tuner with high sensitivity may have a high power consumption. For certain applications, it may be advantageous to use multiple tuners that are optimized for a given frequency band, such as a dedicated tuner

for the low VHF band, another dedicated tuner for the high VHF band and the UHF band, and yet other dedicated tuners for receiving the digital video broadcasting (DVB) via satellite (DVB-S), via cable (DVB-C), or terrestrial digital video broadcasting (DVB-T). The multi-tuner approach may also be advantageously applied to cable networks that carry TV programs on an 88 MHz to 860 MHz according to the Data Over Cable Service Interface Specification (DOCSIS) protocol.

[0040] FIG. 6 shows a simplified schematic block diagram of a wideband multi-tuner receiver system 600 according to an embodiment of the present invention. In an embodiment, multi-tuner system 600 includes low noise amplifier A1 602 for receiving an RF input signal 601. Amplifier A1 602 is coupled to at least a tuner1 610 and a tuner2 720. In another embodiment, multi-tuner system 600 may not include amplifier 602 so that RF input signal 601 can be received directly at each tuner 610 and 720.

[0041] Tuner1 610 includes an amplifying filter AF1 613 that filters and amplifies a first portion BWtuner1 604 of a broad frequency spectrum 608 that contains a first plurality of RF channels 606 including desired channels 607 having respective channel frequencies f_{rf1} and f_{rf2}. The first portion of the broad frequency spectrum BWtuner1 604 is then frequency down-converted to a low-IF or zero-IF in-phase signal I1 612 and a quadrature signal Q1 622 through respective mixer M1 611 and M2 621. Signals I1 612 and Q1 622 are further amplified and low-pass filtered before applying to respective analog-to-digital converters ADC1 618 and ADC2 628 that convert analog signals Ia1 616 and Qa1 626 to respective digital in-phase signal Id1 631 and digital quadrature signal Qd1 641. Because tuner1 610 only covers a portion BWtuner1 604 of the entire frequency spectrum 608 having fewer channels, the ADC1 618 and ADC2 628 can be slower-speed analog-to-digital converters with a large number of bits, i.e., large dynamic range.

[0042] Digital signals Id1 631 and Qd1 641 are then provided to a digital front end DFE 630 that includes a first bank of N complex mixers 632 and channel and decimating filters 634. The first bank of N complex filters 632 has N identical complex mixers, where N is an integer value equal to the number of desired channels located in the first portion BWtuner1 604 of the broad frequency spectrum 608. In an embodiment, each one of the first bank of N complex mixers includes four digital mixers that multiply digital stream Id1 631 and Qd1 641 with respective digitized cosine function and sine function to generate the sum and difference frequency components, as shown in FIG. 3. The digitized cosine and sine frequency, i.e., the mixer frequency is so chosen so that when mixing signals Id1 631 and Qd1 641 will move them to a baseband or a low-IF band. In an embodiment, channel and decimating filters have similar structures as filters 330 and 340 and demodulator 350 as shown in FIG. 3. That is, channel and decimating filters include digital low-pass filters 330 and 340 that eliminates unwanted high frequency components of the baseband signals I and Q prior to applying them to a decimator 350 (FIG. 3) that reduces the sample frequency without any loss of information since Id1 631 and Qd1 641 are sampled at a much higher frequency by the respective ADC1 618 and ADC2 628.

[0043] The decimated desired channels are then provided to an up-converter module 650 that includes a bank of N up-mixers. The bank of N up-mixers includes N identical up-mixers whose structure is shown in FIG. 5. In an embodiment, N is an integer value equal to the number of desired channels present in BWtuner1 604. Each one of the up-mixer frequency-shifts the baseband signals I and Q of each one of the desired channels to an appropriate portion of the intermediate frequency band according to Equation (3). In other words, the bank of N up-mixers is “frequency multiplexing” the desired channels onto a first portion 682 of an IF band 686.

[0044] Similarly, tuner2 720 includes an amplifying filter AF2 713 that is configured to receive a second portion BWtuner2 704 of the broad frequency spectrum 608. The second portion 704 contains a second plurality of RF channels 706 including a second number of desired channels. In the exemplary illustration of FIG. 6, the second portion 704 has a frequency bandwidth of BWtuner2 that contains desired channels 707 having respective channel frequencies f_{rf3} and f_{rf4}. Tuner2 720 includes elements such as mixers M3 711, M4 721, amplifiers V3 714, V4 724, filters F3 715, F4 725 and analog-to-digital converters ADC3 731 and ADC4 741 that are substantially the same as the like-named elements of the signal path of tuner1 610. Thus, redundant description is omitted herein.

[0045] Digital in-phase signal Id2 731 and digital quadrature signal Qd2 741 are then provided to digital front end 740. Digital front end 740 includes a bank of L complex filters, where L is an integer value equal to the number of desired channels in the second portion BWtuner2 704 of the broad frequency spectrum 608. Each one of the bank of L complex filters is a digital complex mixer configured to transform the signals Id2 731 and Qd2 741 to baseband signals that are further filtered by individual digital low-pass filters such as FIR filters before decimated by a subsequent decimator. The elements of digital front end 740 are substantially similar to those described in digital front end 630. Thus, redundant description is omitted herein.

[0046] The decimated baseband I and Q channels are further provided to a subsequent up-conversion module 760 that performs a function substantially similar to that of the up-conversion module 650 already described above. The outputs of up-conversion module 650 and 760 can be tiled to generate a contiguous set of IF frequencies 682, 684 centered at f_{if} 686. In an embodiment, the outputs of up-conversion module 650 and 760 are digitally summed and converted to an analog signal by summing DAC 670. In another embodiment, the up-conversion modules 650 and 760 and the

digital summing function 672 can be performed using an inverse discrete Fourier transform or an inverse Fast Fourier transform operation.

[0047] The multi-tuner architecture provides the flexibility that multiple commercially available tuners can be used without the need of designing a wideband tuner. For example, a tuner designed for a terrestrial broadcast digital TV can be used together with a tuner dedicated to receiving a cable signal and/or a tuner for receiving a satellite broadcast signal. The multi-tuner receiver system provides an additional advantage that other tuners can be added quickly to the system to accommodate any future applications. Additionally, the multi-tuner architecture allows the use of slower speed (i.e., lower cost) analog-to-digital converters with a larger number of bits for achieving large dynamic range.

[0048] FIG. 7 shows a block diagram of an exemplary digital front end of the invention in more detail. In an embodiment, in-phase signal Id2 731 and quadrature signal Qd2 741 at the output of respective ADC converters 718 and 728 are provided to each of the L complex mixers 732 comprising mixers 732A to 732L. A more detailed description of each of L complex mixers is shown in FIG. 3. Mixer 732A multiplies Id2 731 and Qd2 741 with a cosine signal and a sine signal that are generated from an NCO1 and produces an I-732A signal and a Q-732A signal that are further individually filtered by an FIR filter before decimating. The bank of L complex mixers corresponds to the block 732 in FIG. 6; and the set of FIR filters and decimator corresponds to the block 734 in FIG. 6. Each decimated pair of I-732i/M in the baseband, where the index "i" is from A to L, is further provided to a subsequent up-mixer for frequency-shifting to an intermediate frequency as shown in FIG. 8.

[0049] FIG. 8 shows an exemplary embodiment of a bank of L complex up-mixers according to the present invention. Each decimated pair of complex signals I-732i/M and Q-732i/M is provided to an associated complex up-mixer, whose frequency is so chosen

that when mixing with the pair of complex signals I-732i/M and Q-732i/M will generate an associated channel at a predetermined sub-portion of the intermediate frequency band 686 (FIG. 6). A more detailed schematic block of one of the L up-mixers is described above together with FIG. 5.

[0050] FIG. 9 is a simplified block diagram of a wideband multi-tuner receiver system 900 according to an embodiment of the present invention. In an embodiment, system 900 includes a crossbar switch 910 having at least an input terminal 912 configured to receive signals from an analog-to-digital converter (ADC) 912 and an input terminal 922 configured to receive signals from an ADC 922. Crossbar switch 910 also includes an output terminal 924 that is coupled to a digital front end 930. In an embodiment, input terminals 912 and 922 of crossbar switch 910 have P inputs, where P is an integer value that is equal to the total number of desired channels received by tuner1 610 and tuner2 720. Output terminal 924 of crossbar switch 910 have Q outputs, where Q is an integer value that is equal to the total number of desired channels received by tuner1 610 and tuner2 720.

[0051] In an embodiment, digital front end 930 may include a bank of R complex mixers that frequency shifts the received channels to a baseband. Digital front end 930 may combine digital front end 630 and 740 shown in FIG. 6. Similarly, a tiled up-conversion module 950 may include up-converter modules 650 and 760 of FIG. 6.

[0052] System 900 further includes a summing DAC that operates similarly as summing DAC 470 and 670 that have been described in detail in relation with respective FIG. 4 and FIG. 6 above. Thus, redundant description is omitted herein.

[0053] FIG. 10 is a simplified block diagram of a wideband multi-tuner receiver system 1000 according to another embodiment of the present invention. System 1000 includes at least tuner1 610 coupled with digital front end 630 through an analog-to-digital converter 620 and tuner2 720 coupled with digital front end 740 through an

analog-to-digital converter 730. System 1000 further includes a crossbar switch 1010 that is interposed between digital front ends 630, 740 and up-conversion modules 650, 760. Crossbar switch 1010 includes an input terminal 1012 having S inputs coupled with DFE 630 and an input terminal 1022 having T inputs coupled with DFE 740. In an embodiment, S is an integer value equal to the number of desired channels processed in DFE 630 and T is an integer value equal to the number of desired channels processed in DFE 740. Crossbar switch 1010 further includes an output terminal 1024 having U outputs coupled with up-converter module 650 and an output terminal 1024 having V outputs coupled with up-converter module 760. In an embodiment, the total number of the outputs U and V is equal to the sum of the inputs S and T. Thus, crossbar switch 1010 allows the routing of any channel from either DFE 630 or DFE 740 to up-converters 650 or 760. It is understood that system 1000 is not as flexible as system 900 because DFE 630 and DFE 740 are already pre-assigned to respective tuner1 (610) and tuner2 (720). However, this pre-assigned arrangement allows a simpler implementation of crossbar switch 1010 that operates at lower speeds.

[0054] While several embodiments in accordance with the present invention have been described, it is to be understood that the above description is intended to be illustrative and not restrictive. Many embodiments will be apparent to those of skill in the art upon reviewing the above description. The scope of the invention should, therefore, be determined not with reference to the above description, but instead should be determined with reference to the appended claims along with their full scope of equivalents.

CLAIMS

What is claimed is:

1. A wideband receiver system comprising:

a mixer module configured to downconvert a plurality of frequencies that comprises a plurality of desired television channels and a plurality of undesired television channels;

a wideband analog-to-digital converter (ADC) module configured to digitize said plurality of frequencies comprising said plurality of desired television channels and said plurality of undesired television channels;

digital circuitry configured to:

select said plurality of desired television channels from said digitized plurality of frequencies; and

output said selected plurality of television channels to a demodulator as a digital datastream.

2. The wideband receiver system of claim 1, wherein said output of said digital datastream is via a serial interface.

3. The wideband receiver system of claim 1, wherein said output of said digital datastream is via a parallel interface.

4. The wideband receiver system of claim 1, wherein said mixer module comprises a first mixer configured to generate an in-phase signal and a second mixer configured to generate a quadrature signal.

5. The wideband receiver system of claim 1, wherein said a wideband analog-to-digital converter comprises:

a first ADC configured to generate a digital in-phase signal; and

a second ADC configured to generate a digital quadrature signal.

6. The wideband receiver system of claim 5, wherein said digital circuitry comprises a plurality of complex mixers configured to frequency shift said selected plurality of television channels.

7. The wideband receiver system f claim 6, wherein:

prior to said frequency shift, said selected plurality of television channels occupy non-contiguous portions of a frequency spectrum; and

after said frequency shift, said selected plurality of television channels occupy a contiguous frequency spectrum.

8. The wideband receiver system of claim 1, wherein said digital circuitry comprises a plurality of channel filters configured to perform said selection of said plurality of desired television channels.

9. The wideband receiver system of claim 8, wherein each one of said plurality of channel filters is a finite impulse response filter.

10. The wideband receiver system of claim 1, wherein said digital circuitry comprises a decimator circuit configured to decimate one or more of said selected plurality of television channels prior to said output of said selected plurality of television channels.

11. A method comprising:

in a wideband receiver system:

downconverting, by a mixer module of said wideband receiver system, a plurality of frequencies that comprises a plurality of desired television channels and a plurality of undesired television channels;

digitizing, by a wideband analog-to-digital converter (ADC) module of said wideband receiver system, said plurality of frequencies comprising said plurality of desired television channels and said plurality of undesired television channels;

selecting, by digital circuitry of said wideband receiver system, said plurality of desired television channels from said digitized plurality of frequencies; and

outputting, by said digital circuitry of said wideband receiver system, said selected plurality of television channels to a demodulator as a digital datastream.

12. The method of claim 11, comprising outputting, by said digital circuitry of said wideband receiver system, said digital datastream via a serial interface.

13. The method of claim 11, comprising outputting, by said digital circuitry of said wideband receiver system, said digital datastream via a parallel interface.

14. The method of claim 11, comprising:

generating, by a first mixer of said mixer module, an in-phase signal; and

generating, by a second mixer of said mixer module, a quadrature signal.

15. The method of claim 11, comprising:

generating, via a first ADC of said wideband analog-to-digital converter, a digital in-phase signal; and

generating, via a second ADC of said wideband analog-to-digital converter, a digital quadrature signal.

16. The method of claim 15, comprising frequency shifting said selected plurality of television channels via a plurality of complex mixers of said digital circuitry.

17. The method of claim 16, wherein:

prior to said frequency shifting, said selected plurality of television channels occupy non-contiguous portions of a frequency spectrum; and

after said frequency shifting, said selected plurality of television channels occupy a contiguous frequency spectrum.

18. The method of claim 11, wherein said digital circuitry comprises a plurality of channel filters configured to perform said selecting.

19. The method of claim 18, wherein each one of said plurality of channel filters is a finite impulse response filter.

20. The method of claim 11, comprising decimating, by said digital circuitry, one or more of said selected plurality of television channels prior to said outputting of said selected plurality of television channels.

ABSTRACT

A wideband receiver system comprises a mixer module, a wideband analog-to-digital converter (ADC) module, and digital circuitry. The mixer module is configured to downconvert a plurality of frequencies that comprises a plurality of desired television channels and a plurality of undesired television channels. The wideband ADC module is configured to digitize the swatch of frequencies comprising the plurality of desired television channels and the plurality of undesired television channels. The digital circuitry is configured to select the desired plurality of television channels from the digitized plurality of frequencies, and output the selected plurality of television channels to a demodulator as a digital datastream.

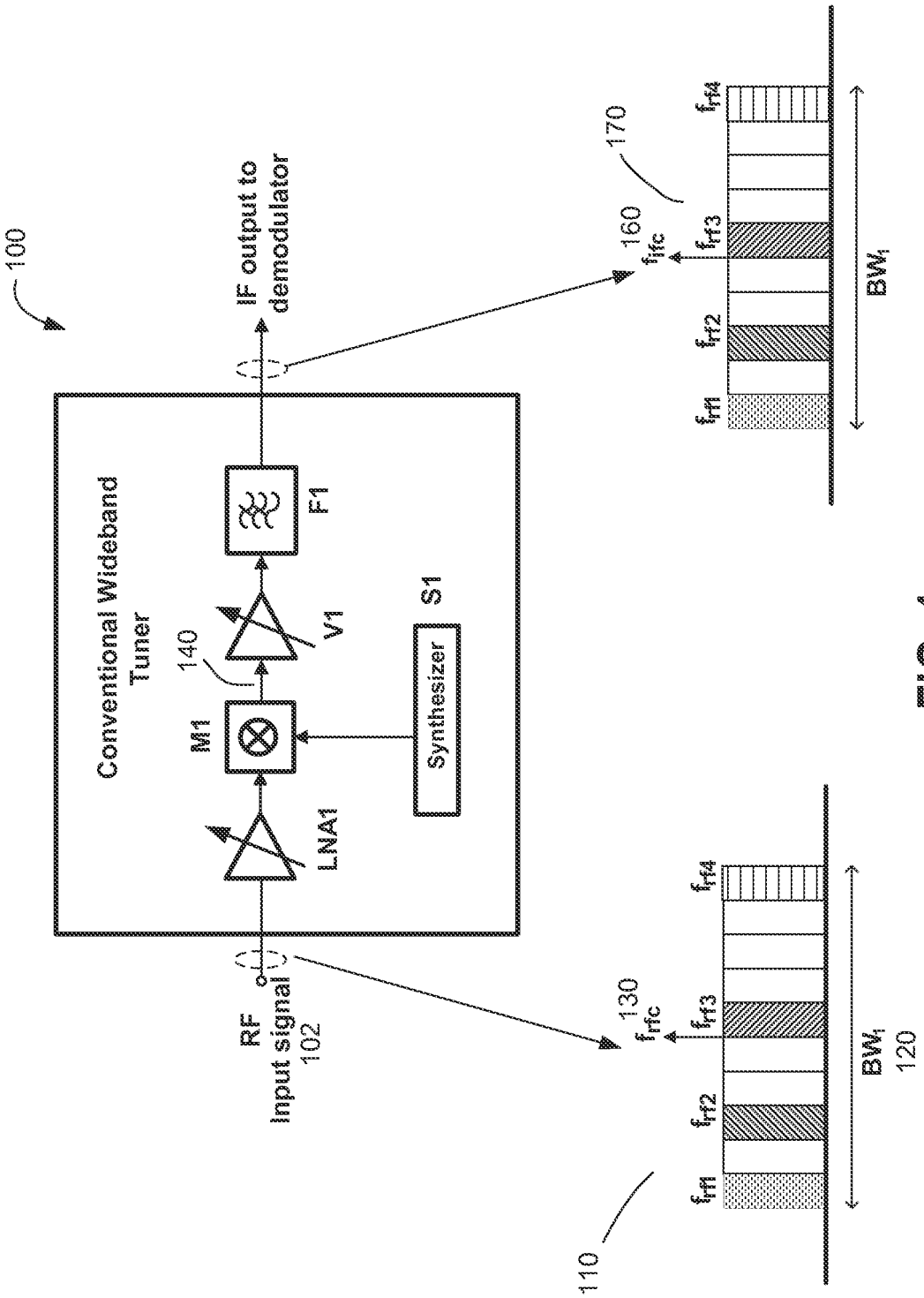

FIG. 1
(Prior Art)

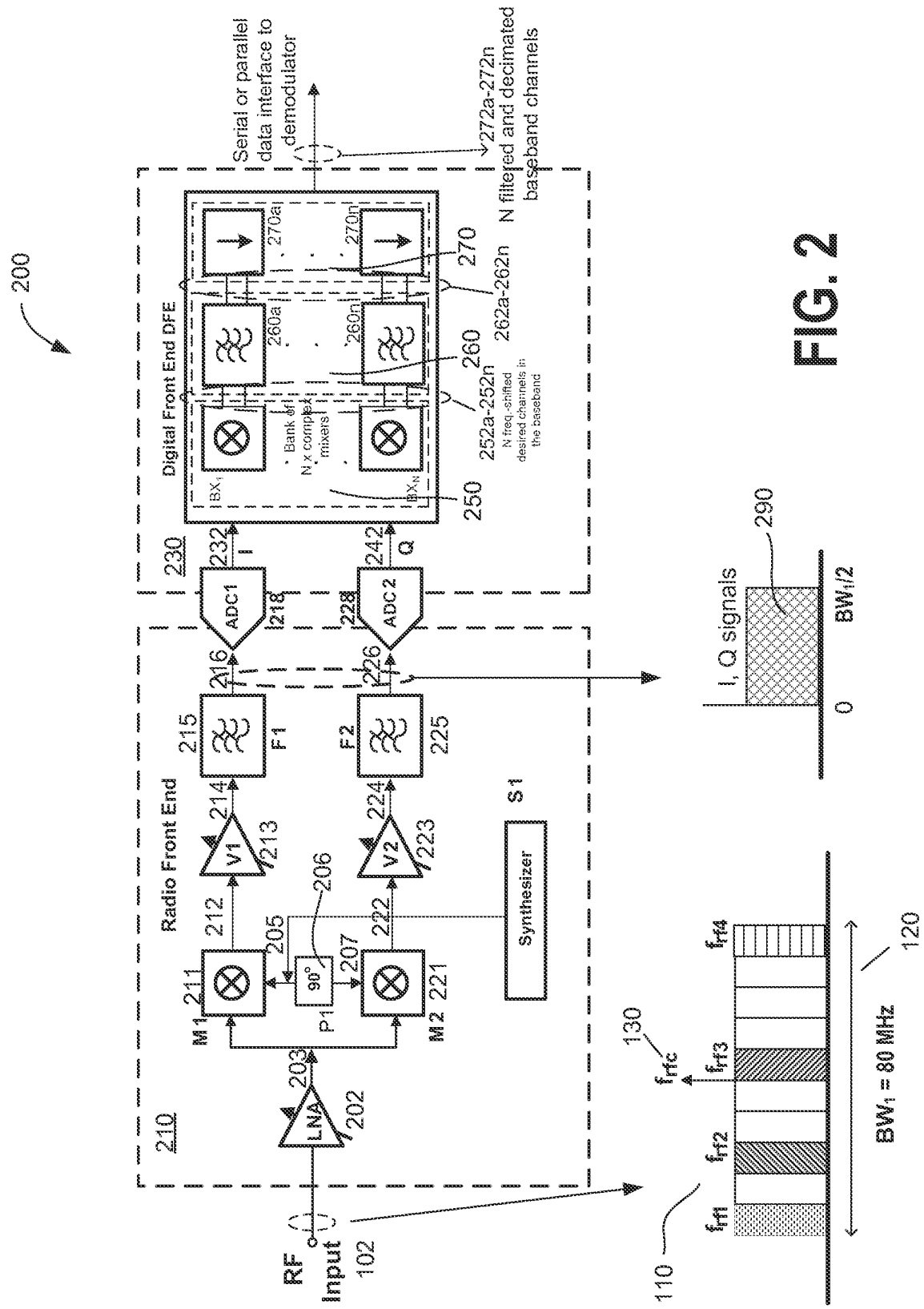
200
210
230
Radio Front End
Digital Front End DFE
RF Input
102
LNA
202
203
M1
211
P1
90°
205
206
207
M2
221
212
V1
213
214
V2
223
224
Synthesizer
S1
215
F1
216
F2
225
226
ADC1
218
ADC2
228
232
I
242
Q
BX1
BXN
Bank of N x complex mixers
250
260a
260n
260
270a
270n
270
252a-252n
N freq.-shifted desired channels in the baseband
262a-262n
Serial or parallel data interface to demodulator
272a-272n
N filtered and decimated baseband channels
I, Q signals
290
0
BW1/2
110
130
frf1
frf2
frfc
frf3
frf4
BW1 = 80 MHz
120

FIG. 2

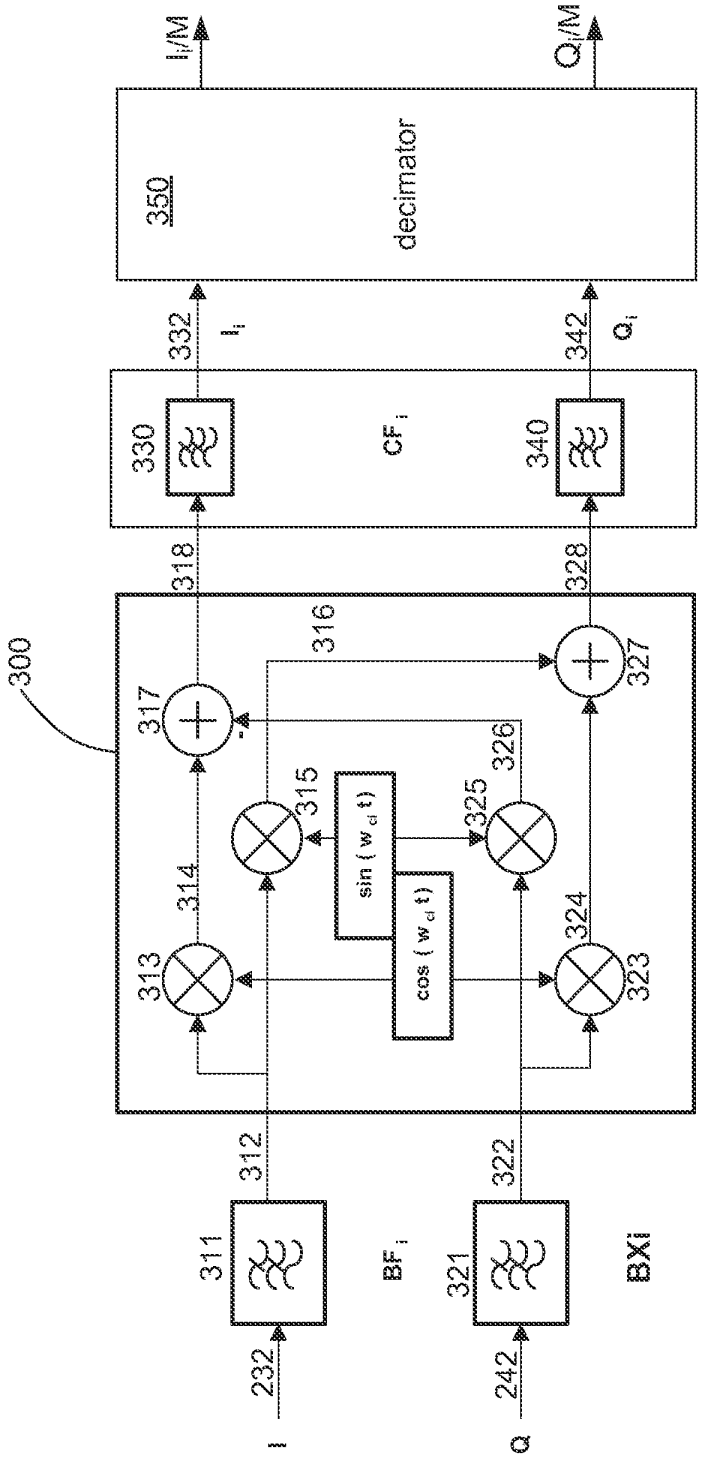
300
I
232
311
312
BF$_i$
Q
242
321
322
BXi
313
314
315
316
317
318
sin (w$_{ci}$ t)
cos (w$_{ci}$ t)
323
324
325
326
327
328
330
332
CF$_i$
340
342
I$_i$
Q$_i$
350
decimator
I$_i$/M
Q$_i$/M

FIG. 3

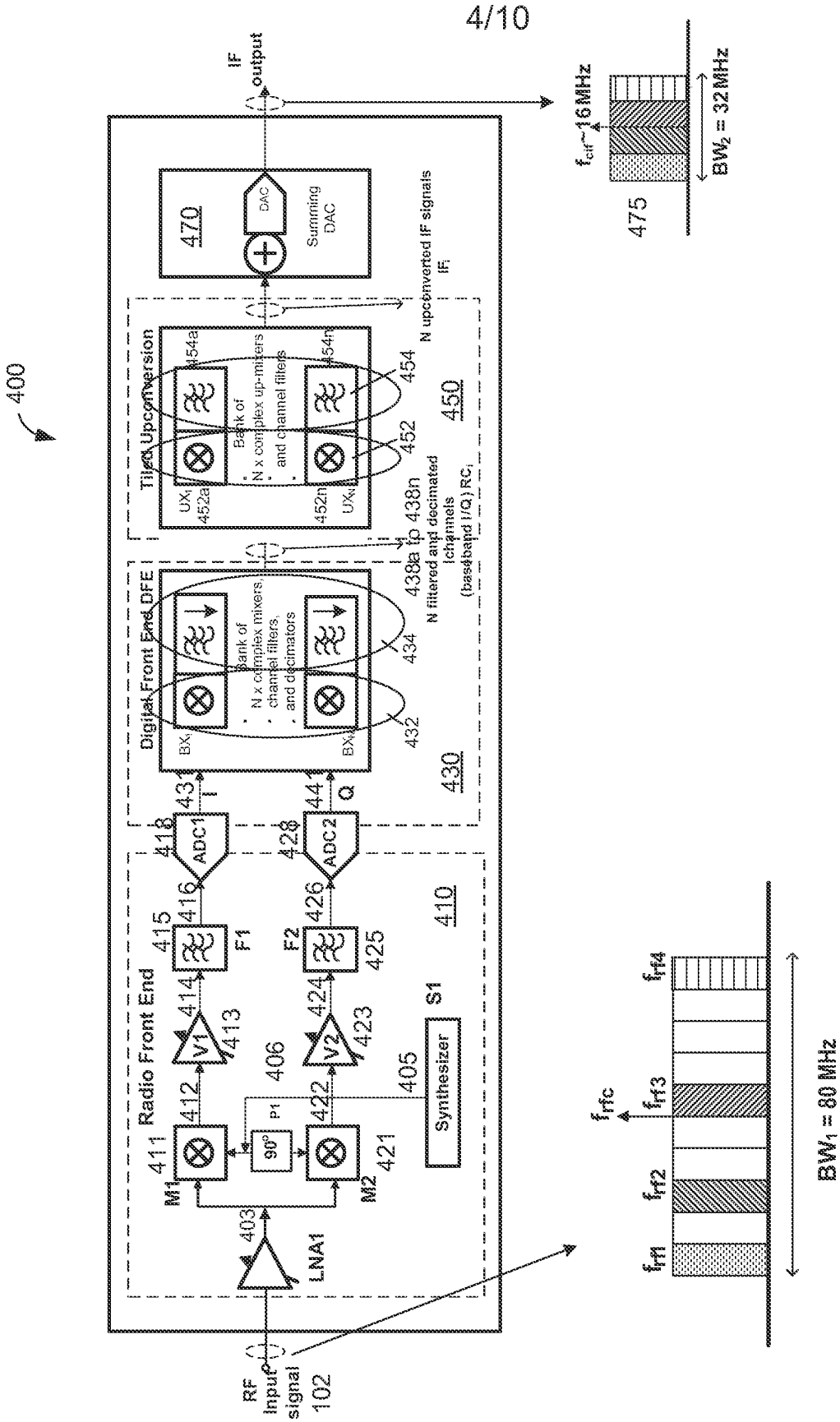
400
RF Input signal 102
LNA1
403
M1
M2
411
421
90°
P1
412
422
406
405
Synthesizer
S1
V1
V2
413
423
414
424
415
425
F1
F2
416
426
ADC1
ADC2
418
428
431
441
I
Q
Radio Front End
410
Digital Front End DFE
430
Bank of N x complex mixers, channel filters, and decimators
432
434
438a to 438n
N filtered and decimated channels (baseband I/Q) RC
Tiled Upconversion
450
Bank of N x complex up-mixers and channel filters
452
454
N upconverted IF signals
IF
Summing DAC
DAC
470
IF output
475
f_{cif}~16 MHz
BW_2 = 32 MHz
f_{rf1}
f_{rf2}
f_{rf3}
f_{rf4}
f_{rfc}
BW_1 = 80 MHz

FIG. 4

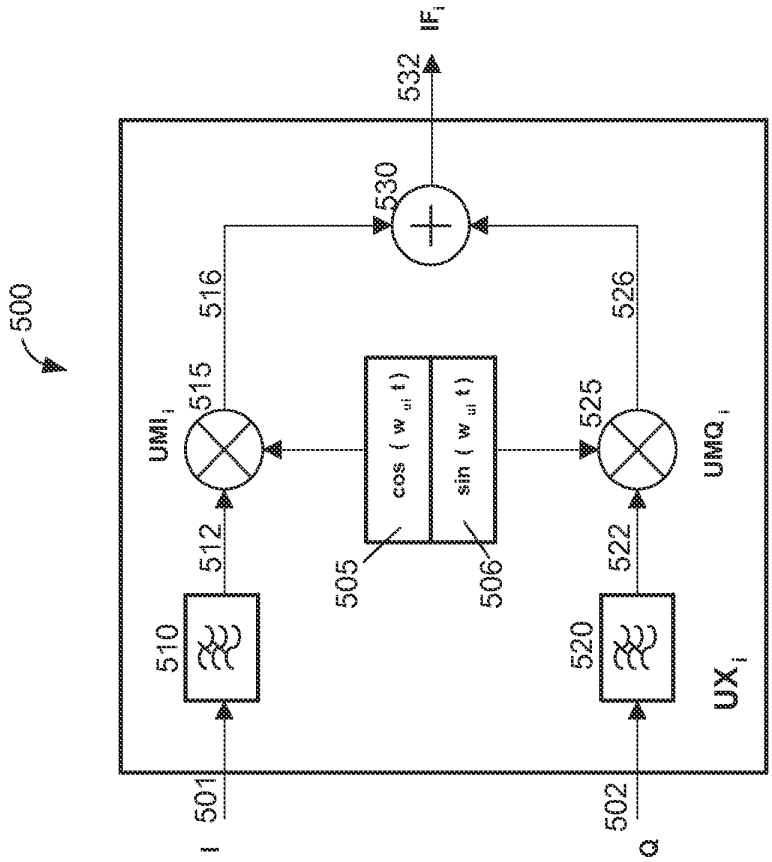
500
I
501
Q
502
510
520
UX$_i$
512
522
UMI$_i$
515
525
UMQ$_i$
516
526
505
506
cos (w$_{ui}$ t)
sin (w$_{ui}$ t)
530
532
IF$_i$

FIG. 5

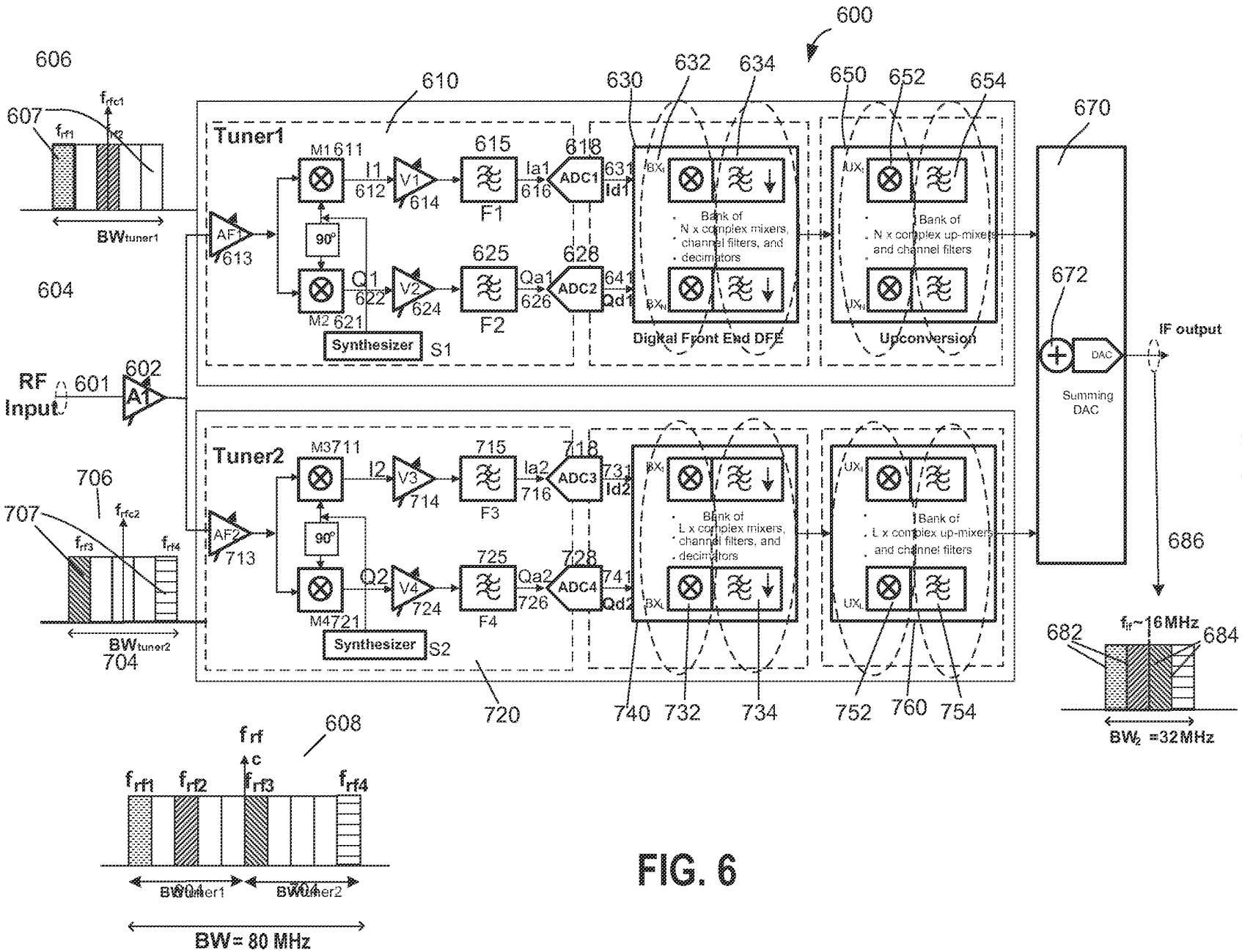
600
606
607
f_{rf1}
f_{rfc1}
f_{rf2}
BW_{tuner1}
604
RF Input
601
602
A1
Tuner1
610
M1 611
I1
612
V1
614
615
F1
Ia1
616
ADC1
618
631
Id1
AF1
613
90°
M2 621
Q1
622
V2
624
625
F2
Qa1
626
ADC2
628
641
Qd1
Synthesizer
S1
630
632
634
650
652
654
Bank of N x complex mixers, channel filters, and decimators
Digital Front End DFE
Bank of N x complex up-mixers and channel filters
Upconversion
670
672
DAC
Summing DAC
IF output
686
Tuner2
M3 711
I2
V3
714
715
F3
Ia2
716
ADC3
718
731
Id2
AF2
713
M4 721
Q2
V4
724
725
F4
Qa2
726
ADC4
728
741
Qd2
Synthesizer
S2
Bank of L x complex mixers, channel filters, and decimators
Bank of L x complex up-mixers and channel filters
720
740
732
734
752
760
754
706
707
f_{rfc2}
f_{rf3}
f_{rf4}
BW_{tuner2}
704
682
684
f_{if}~16 MHz
BW_2 =32 MHz
608
f_{rfc}
f_{rf1}
f_{rf2}
f_{rf3}
f_{rf4}
BW_{tuner1}
BW_{tuner2}
BW= 80 MHz

FIG. 6

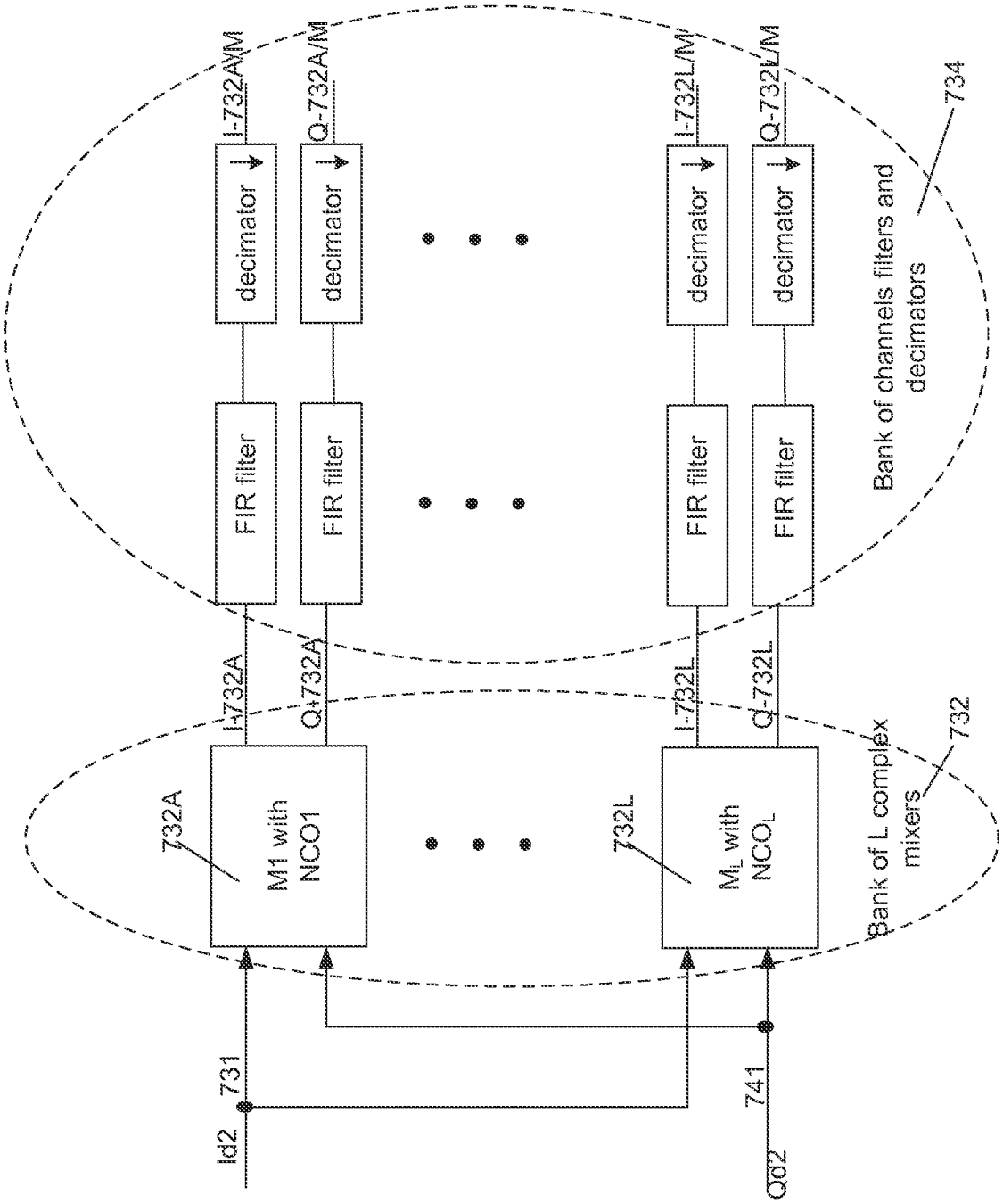
I-732A/M
Q-732A/M
I-732L/M
Q-732L/M
decimator
decimator
decimator
decimator
FIR filter
FIR filter
FIR filter
FIR filter
Bank of channels filters and decimators
734
I-732A
Q-732A
I-732L
Q-732L
732A
M1 with NCO1
732L
ML with NCOL
Bank of L complex mixers
732
731
741
Id2
Qd2

FIG. 7

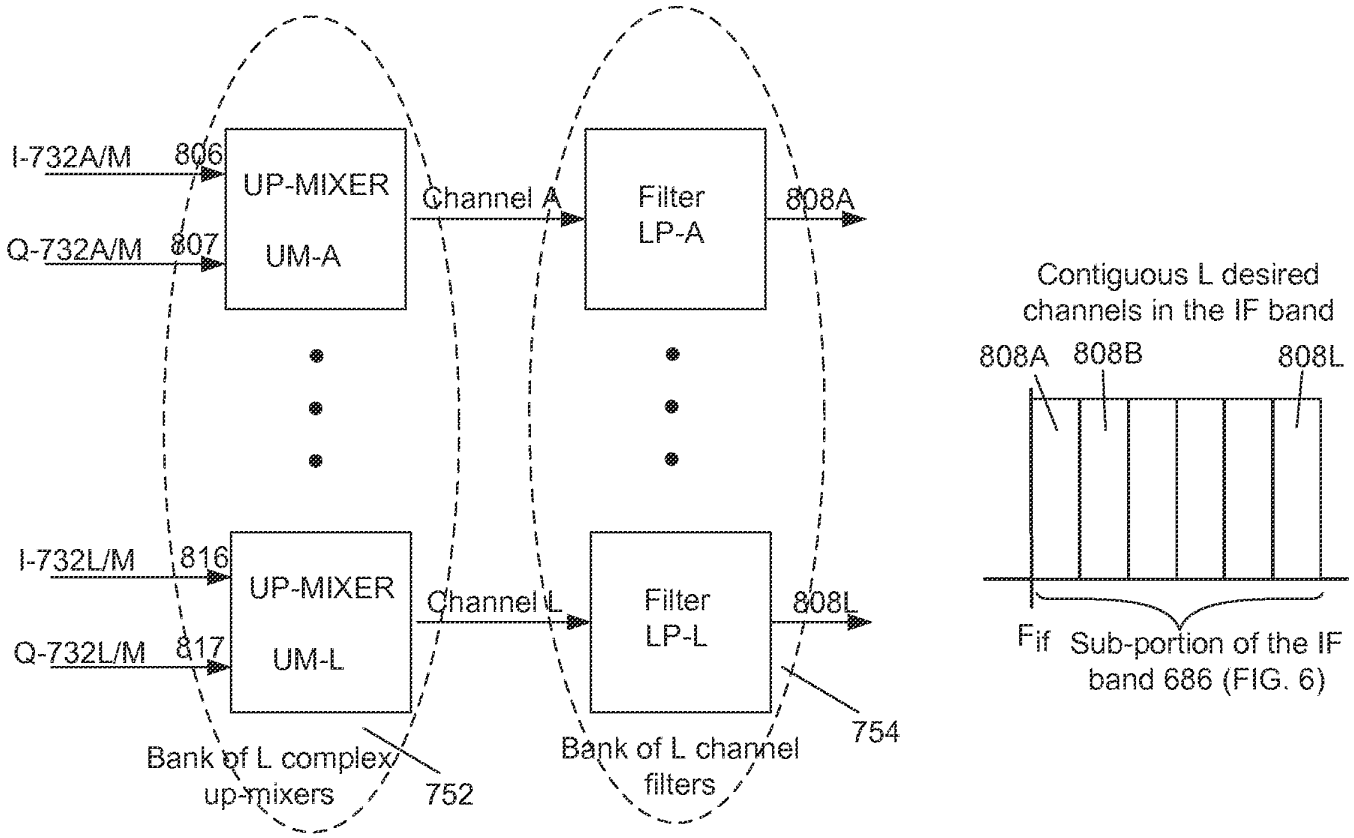
I-732A/M
806
Q-732A/M
807
UP-MIXER
UM-A
Channel A
Filter
LP-A
808A
I-732L/M
816
Q-732L/M
817
UP-MIXER
UM-L
Channel L
Filter
LP-L
808L
Bank of L complex up-mixers
752
Bank of L channel filters
754
Contiguous L desired channels in the IF band
808A
808B
808L
Fif
Sub-portion of the IF band 686 (FIG. 6)

FIG. 8

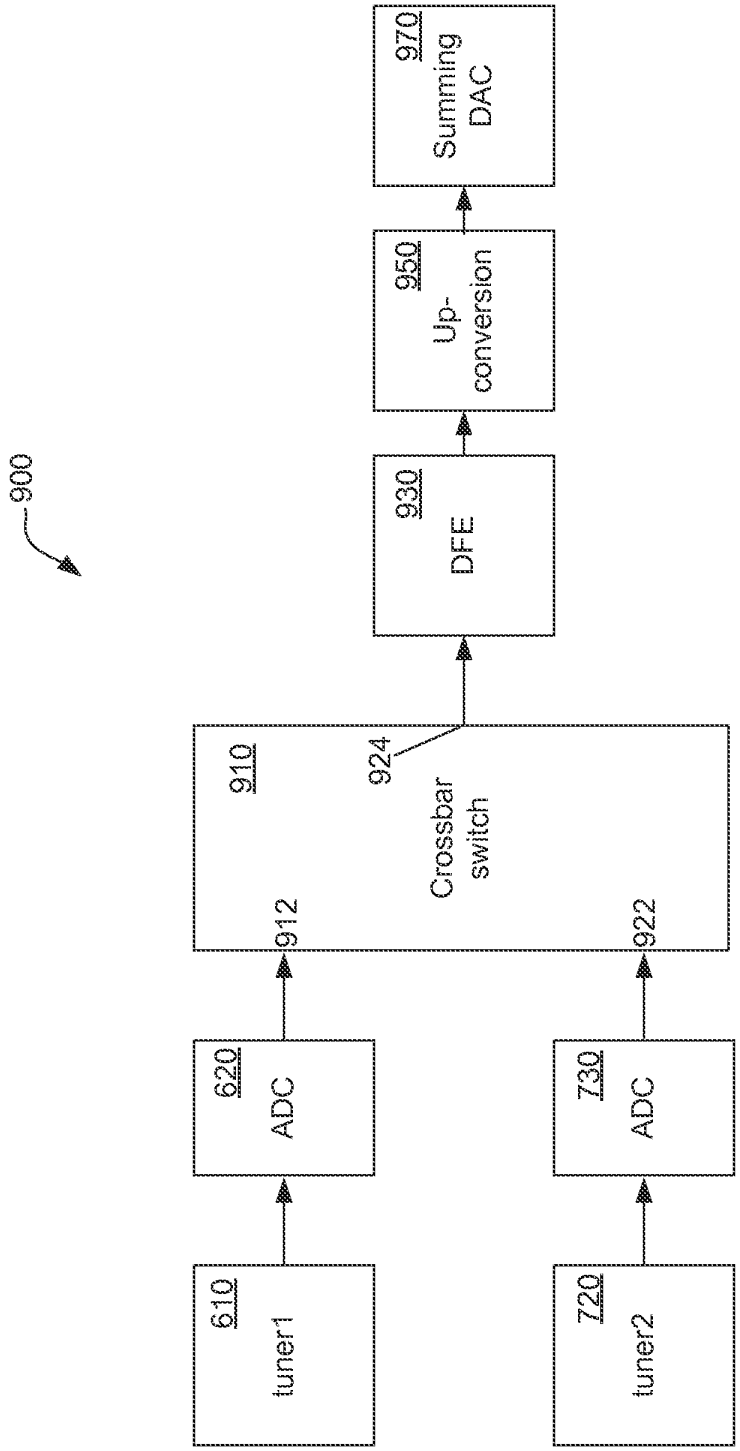
900
610
tuner1
620
ADC
720
tuner2
730
ADC
910
912
922
924
Crossbar
switch
930
DFE
950
Up-
conversion
970
Summing
DAC

FIG. 9

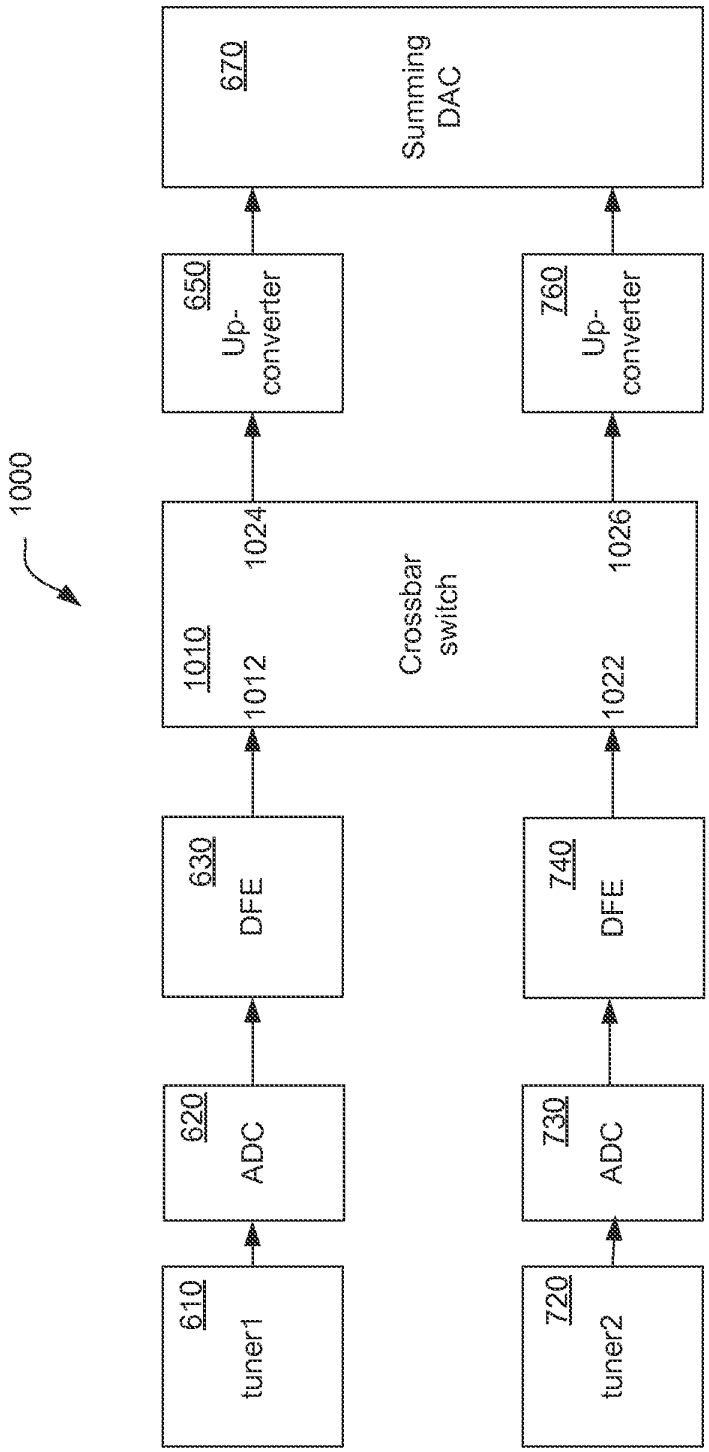
1000
610
tuner1
620
ADC
630
DFE
1010
1012
1024
Crossbar
switch
1022
1026
650
Up-
converter
670
Summing
DAC
720
tuner2
730
ADC
740
DFE
760
Up-
converter

FIG. 10

PTO/AIA/01 (06-12)
Approved for use through 01/31/2014. OMB 0651-0032
U.S. Patent and Trademark Office; U.S. DEPARTMENT OF COMMERCE
Under the Paperwork Reduction Act of 1995, no persons are required to respond to a collection of information unless it displays a valid OMB control number.

DECLARATION (37 CFR 1.63) FOR UTILITY OR DESIGN APPLICATION USING AN APPLICATION DATA SHEET (37 CFR 1.76)

Title of Invention	WIDEBAND TUNER ARCHITECTURE

As the below named inventor, I hereby declare that:

This declaration is directed to:

☐ The attached application, or

☒ United States application or PCT international application number 13/962,871 filed on August 8, 2013.

The above-identified application was made or authorized to be made by me.

I believe that I am the original inventor or an original joint inventor of a claimed invention in the application.

I hereby acknowledge that any willful false statement made in this declaration is punishable under 18 U.S.C. 1001 by fine or imprisonment of not more than five (5) years, or both.

WARNING:

Petitioner/applicant is cautioned to avoid submitting personal information in documents filed in a patent application that may contribute to identity theft. Personal information such as social security numbers, bank account numbers, or credit card numbers (other than a check or credit card authorization form PTO-2038 submitted for payment purposes) is never required by the USPTO to support a petition or an application. If this type of personal information is included in documents submitted to the USPTO, petitioners/applicants should consider redacting such personal information from the documents before submitting them to the USPTO. Petitioner/applicant is advised that the record of a patent application is available to the public after publication of the application (unless a non-publication request in compliance with 37 CFR 1.213(a) is made in the application) or issuance of a patent. Furthermore, the record from an abandoned application may also be available to the public if the application is referenced in a published application or an issued patent (see 37 CFR 1.14). Checks and credit card authorization forms PTO-2038 submitted for payment purposes are not retained in the application file and therefore are not publicly available.

LEGAL NAME OF INVENTOR

Inventor: Madhukar Reddy Date (Optional) :

Signature:

Note: An application data sheet (PTO/SB/14 or equivalent), including naming the entire inventive entity, must accompany this form or must have been previously filed. Use an additional PTO/AIA/01 form for each additional inventor.

This collection of information is required by 35 U.S.C. 115 and 37 CFR 1.63. The information is required to obtain or retain a benefit by the public which is to file (and by the USPTO to process) an application. Confidentiality is governed by 35 U.S.C. 122 and 37 CFR 1.11 and 1.14. This collection is estimated to take 1 minute to complete, including gathering, preparing, and submitting the completed application form to the USPTO. Time will vary depending upon the individual case. Any comments on the amount of time you require to complete this form and/or suggestions for reducing this burden, should be sent to the Chief Information Officer, U.S. Patent and Trademark Office, U.S. Department of Commerce, P.O. Box 1450, Alexandria, VA 22313-1450. DO NOT SEND FEES OR COMPLETED FORMS TO THIS ADDRESS. **SEND TO: Commissioner for Patents, P.O. Box 1450, Alexandria, VA 22313-1450.**

If you need assistance in completing the form, call 1-800-PTO-9199 and select option 2.

PTO/AIA/01 (06-12)
Approved for use through 01/31/2014. OMB 0651-0032
U.S. Patent and Trademark Office; U.S. DEPARTMENT OF COMMERCE
Under the Paperwork Reduction Act of 1995, no persons are required to respond to a collection of information unless it displays a valid OMB control number.

DECLARATION (37 CFR 1.63) FOR UTILITY OR DESIGN APPLICATION USING AN APPLICATION DATA SHEET (37 CFR 1.76)

Title of Invention	WIDEBAND TUNER ARCHITECTURE

As the below named inventor, I hereby declare that:

This declaration is directed to:

☐ The attached application, or

☒ United States application or PCT international application number 13/962,871 filed on August 8, 2013.

The above-identified application was made or authorized to be made by me.

I believe that I am the original inventor or an original joint inventor of a claimed invention in the application.

I hereby acknowledge that any willful false statement made in this declaration is punishable under 18 U.S.C. 1001 by fine or imprisonment of not more than five (5) years, or both.

WARNING:

Petitioner/applicant is cautioned to avoid submitting personal information in documents filed in a patent application that may contribute to identity theft. Personal information such as social security numbers, bank account numbers, or credit card numbers (other than a check or credit card authorization form PTO-2038 submitted for payment purposes) is never required by the USPTO to support a petition or an application. If this type of personal information is included in documents submitted to the USPTO, petitioners/applicants should consider redacting such personal information from the documents before submitting them to the USPTO. Petitioner/applicant is advised that the record of a patent application is available to the public after publication of the application (unless a non-publication request in compliance with 37 CFR 1.213(a) is made in the application) or issuance of a patent. Furthermore, the record from an abandoned application may also be available to the public if the application is referenced in a published application or an issued patent (see 37 CFR 1.14). Checks and credit card authorization forms PTO-2038 submitted for payment purposes are not retained in the application file and therefore are not publicly available.

LEGAL NAME OF INVENTOR

Inventor: Curtis Ling Date (Optional) :

Signature:

Note: An application data sheet (PTO/SB/14 or equivalent), including naming the entire inventive entity, must accompany this form or must have been previously filed. Use an additional PTO/AIA/01 form for each additional inventor.

This collection of information is required by 35 U.S.C. 115 and 37 CFR 1.63. The information is required to obtain or retain a benefit by the public which is to file (and by the USPTO to process) an application. Confidentiality is governed by 35 U.S.C. 122 and 37 CFR 1.11 and 1.14. This collection is estimated to take 1 minute to complete, including gathering, preparing, and submitting the completed application form to the USPTO. Time will vary depending upon the individual case. Any comments on the amount of time you require to complete this form and/or suggestions for reducing this burden, should be sent to the Chief Information Officer, U.S. Patent and Trademark Office, U.S. Department of Commerce, P.O. Box 1450, Alexandria, VA 22313-1450. DO NOT SEND FEES OR COMPLETED FORMS TO THIS ADDRESS. **SEND TO: Commissioner for Patents, P.O. Box 1450, Alexandria, VA 22313-1450.**

If you need assistance in completing the form, call 1-800-PTO-9199 and select option 2.

PTO/AIA/01 (06-12)
Approved for use through 01/31/2014. OMB 0651-0032
U.S. Patent and Trademark Office; U.S. DEPARTMENT OF COMMERCE
Under the Paperwork Reduction Act of 1995, no persons are required to respond to a collection of information unless it displays a valid OMB control number.

DECLARATION (37 CFR 1.63) FOR UTILITY OR DESIGN APPLICATION USING AN APPLICATION DATA SHEET (37 CFR 1.76)

Title of Invention	WIDEBAND TUNER ARCHITECTURE

As the below named inventor, I hereby declare that:

This declaration is directed to:

☐ The attached application, or

☒ United States application or PCT international application number 13/962,871 filed on August 8, 2013.

The above-identified application was made or authorized to be made by me.

I believe that I am the original inventor or an original joint inventor of a claimed invention in the application.

I hereby acknowledge that any willful false statement made in this declaration is punishable under 18 U.S.C. 1001 by fine or imprisonment of not more than five (5) years, or both.

WARNING:

Petitioner/applicant is cautioned to avoid submitting personal information in documents filed in a patent application that may contribute to identity theft. Personal information such as social security numbers, bank account numbers, or credit card numbers (other than a check or credit card authorization form PTO-2038 submitted for payment purposes) is never required by the USPTO to support a petition or an application. If this type of personal information is included in documents submitted to the USPTO, petitioners/applicants should consider redacting such personal information from the documents before submitting them to the USPTO. Petitioner/applicant is advised that the record of a patent application is available to the public after publication of the application (unless a non-publication request in compliance with 37 CFR 1.213(a) is made in the application) or issuance of a patent. Furthermore, the record from an abandoned application may also be available to the public if the application is referenced in a published application or an issued patent (see 37 CFR 1.14). Checks and credit card authorization forms PTO-2038 submitted for payment purposes are not retained in the application file and therefore are not publicly available.

LEGAL NAME OF INVENTOR

Inventor: Tim Gallagher Date (Optional) :

Signature:

Note: An application data sheet (PTO/SB/14 or equivalent), including naming the entire inventive entity, must accompany this form or must have been previously filed. Use an additional PTO/AIA/01 form for each additional inventor.

This collection of information is required by 35 U.S.C. 115 and 37 CFR 1.63. The information is required to obtain or retain a benefit by the public which is to file (and by the USPTO to process) an application. Confidentiality is governed by 35 U.S.C. 122 and 37 CFR 1.11 and 1.14. This collection is estimated to take 1 minute to complete, including gathering, preparing, and submitting the completed application form to the USPTO. Time will vary depending upon the individual case. Any comments on the amount of time you require to complete this form and/or suggestions for reducing this burden, should be sent to the Chief Information Officer, U.S. Patent and Trademark Office, U.S. Department of Commerce, P.O. Box 1450, Alexandria, VA 22313-1450. DO NOT SEND FEES OR COMPLETED FORMS TO THIS ADDRESS. **SEND TO: Commissioner for Patents, P.O. Box 1450, Alexandria, VA 22313-1450.**

If you need assistance in completing the form, call 1-800-PTO-9199 and select option 2.

PTO/AIA/80 (07-12)
Approved for use through 11/30/2014. OMB 0651-0035
U.S. Patent and Trademark Office; U.S DEPARTMENT OF COMMERCE
Under the Paperwork Reduction Act of 1995, no persons are required to respond to a collection of information unless it displays a valid OMB control number.

POWER OF ATTORNEY TO PROSECUTE APPLICATIONS BEFORE THE USPTO

I hereby revoke all previous powers of attorney given in the application identified in the attached statement under 37 CFR 3.73(c).

I hereby appoint:

☑ Practitioners associated with Customer Number: 23,446

OR

☐ Practitioner(s) named below (if more than ten patent practitioners are to be named, then a customer number must be used):

Name	Registration Number	Name	Registration Number

As attorney(s) or agent(s) to represent the undersigned before the United States Patent and Trademark Office (USPTO) in connection with any and all patent applications a ssigned only to the undersigned according to the USPTO assignment records or assignments docu ments attached to this form in accordance with 37 CFR 3.73(c).

Please change the correspondence address for the application identified in the attached statement under 37 CFR 3.73(c) to:

☑ The address associated with Customer Number: 23,446

OR

☐ Firm or Individual Name		
Address		
City		
Country		
Telephone		Email

Assignee Name and Address: MaxLinear, Inc.
2051 Palomar Airport Road, Suite 100
Carlsbad, CA 92011

A copy of this form, together with a statement under 37 CFR 3.73(c) (Form PTO/SB/96 or equivalent) is required to be Filed in each application in which this form is used. The statement under 37 CFR 3.73(c) may be completed by one of The practitioners appointed in this form, and must identify the application in which this Power of Attorney is to be filed.

SIGNATURE of Assignee of Record

The individual whose signature and title is supplied below is authorized to act on behalf of the assignee

Signature		Date	12Dec2012
Name	Curtis Ling, Ph.D.	Telephone	(760) 692-0711
Title	Chief Technology Officer		

This collection of information is required by 37 CFR 1.31, 1.32 and 1.33. The information is required to obtain or retain a benefit by the public which is to file (and by the USPTO to process) an application. Confidentiality is governed by 35 U.S.C. 122 and 37 CFR 1.11 and 1.14. This collection is estimated to take 3 minutes to complete, including gathering, preparing, and submitting the completed application form to the USPTO. Time will vary depending upon the individual case. Any comments on the amount of time you require to complete this form and/or suggestions for reducing this burden, should be sent to the Chief Information Officer, U.S. Patent and Trademark Office, U.S. Department of Commerce, P.O. Box 1450, Alexandria, VA 22313-1450. DO NOT SEND FEES OR COMPLETED FORMS TO THIS ADDRESS. **SEND TO: Commissioner for Patents, P.O. Box 1450, Alexandria, VA 22313-1450.**

If you need assistance in completing the form, call 1-800-PTO-9199 and select option 2.

Electronic Patent Application Fee Transmittal

Application Number:	
Filing Date:	
Title of Invention:	WIDEBAND TUNER ARCHITECTURE
First Named Inventor/Applicant Name:	Madhukar Reddy
Filer:	Chad M. Gilles/Laura Foley
Attorney Docket Number:	28427US04

Filed as Small Entity

Filing Fees for Track I Prioritized Examination - Nonprovisional Application under 35 USC 111(a)

Description	Fee Code	Quantity	Amount	Sub-Total in USD($)
Basic Filing:				
Utility filing Fee (Electronic filing)	4011	1	70	70
Utility Search Fee	2111	1	300	300
Utility Examination Fee	2311	1	360	360
Request for Prioritized Examination	2817	1	2000	2000
Pages:				
Claims:				
Miscellaneous-Filing:				

Description	Fee Code	Quantity	Amount	Sub-Total in USD($)
Publ. Fee- Early, Voluntary, or Normal	1504	1	0	0
PROCESSING FEE, EXCEPT PROV. APPLS.	2830	1	70	70
Petition:				
Patent-Appeals-and-Interference:				
Post-Allowance-and-Post-Issuance:				
Extension-of-Time:				
Miscellaneous:				
			Total in USD ($)	**2800**

Electronic Acknowledgement Receipt	
EFS ID:	21407506
Application Number:	14614543
International Application Number:	
Confirmation Number:	5785
Title of Invention:	WIDEBAND TUNER ARCHITECTURE
First Named Inventor/Applicant Name:	Madhukar Reddy
Customer Number:	23446
Filer:	Chad M. Gilles/Laura Foley
Filer Authorized By:	Chad M. Gilles
Attorney Docket Number:	28427US04
Receipt Date:	05-FEB-2015
Filing Date:	
Time Stamp:	11:43:37
Application Type:	Utility under 35 USC 111(a)

Payment information:

Submitted with Payment	yes
Payment Type	Credit Card
Payment was successfully received in RAM	$2800
RAM confirmation Number	31265
Deposit Account	
Authorized User	
The Director of the USPTO is hereby authorized to charge indicated fees and credit any overpayment as follows:	

File Listing:

Document Number	Document Description	File Name	File Size(Bytes)/ Message Digest	Multi Part /.zip	Pages (if appl.)
1	TrackOne Request	28427US01_Track_1.pdf	114150 3ef4c458818baa93f9ae609339e4a2f97b73ab39	no	2
Warnings:					
Information:					
2	Application Data Sheet	28427US04_ADS.pdf	1865199 c31bdded106a5f4811a9fbb575ca6a5fcc15fd21	no	7
Warnings:					
Information:					
3		28427US04_spec.pdf	171830 224018974e77aeb6f8894dd7bea1650ea2ac2830	yes	26
	Multipart Description/PDF files in .zip description				
	Document Description		**Start**	**End**	
	Specification		1	21	
	Claims		22	25	
	Abstract		26	26	
Warnings:					
Information:					
4	Drawings-only black and white line drawings	28427US04_figures.pdf	4419764 3146aa711b9cb4885113ed88fc4c2537ca051c59	no	10
Warnings:					
Information:					
5	Oath or Declaration filed	28427US04_Declarations_executed.pdf	336661 44750254e8ce14db07258504c15bc9b027a9eb02	no	3
Warnings:					
Information:					
6	Power of Attorney	MaxLinear_POA_12-12-2012.pdf	150478 15040fff9054e501d1f0b19fc8b5d437f23dd012	no	1

Warnings:					
Information:					
7	Fee Worksheet (SB06)	fee-info.pdf	40569 43354e37f08cdeb4358c8bbd9963036 73e9fee49	no	2
Warnings:					
Information:					
		Total Files Size (in bytes):	7098651		

This Acknowledgement Receipt evidences receipt on the noted date by the USPTO of the indicated documents, characterized by the applicant, and including page counts, where applicable. It serves as evidence of receipt similar to a Post Card, as described in MPEP 503.

New Applications Under 35 U.S.C. 111
If a new application is being filed and the application includes the necessary components for a filing date (see 37 CFR 1.53(b)-(d) and MPEP 506), a Filing Receipt (37 CFR 1.54) will be issued in due course and the date shown on this Acknowledgement Receipt will establish the filing date of the application.

National Stage of an International Application under 35 U.S.C. 371
If a timely submission to enter the national stage of an international application is compliant with the conditions of 35 U.S.C. 371 and other applicable requirements a Form PCT/DO/EO/903 indicating acceptance of the application as a national stage submission under 35 U.S.C. 371 will be issued in addition to the Filing Receipt, in due course.

New International Application Filed with the USPTO as a Receiving Office
If a new international application is being filed and the international application includes the necessary components for an international filing date (see PCT Article 11 and MPEP 1810), a Notification of the International Application Number and of the International Filing Date (Form PCT/RO/105) will be issued in due course, subject to prescriptions concerning national security, and the date shown on this Acknowledgement Receipt will establish the international filing date of the application.

PTO/SB/08a (01-10)
Approved for use through 07/31/2012. OMB 0651-0031
U.S. Patent and Trademark Office; U.S. DEPARTMENT OF COMMERCE
Under the Paperwork Reduction Act of 1995, no persons are required to respond to a collection of information unless it contains a valid OMB control number.

INFORMATION DISCLOSURE STATEMENT BY APPLICANT

(Not for submission under 37 CFR 1.99)

Application Number	14614543
Filing Date	2015-02-05
First Named Inventor	Madhukar Reddy
Art Unit	
Examiner Name	
Attorney Docket Number	28427US04

U.S.PATENTS Remove

Examiner Initial*	Cite No	Patent Number	Kind Code[1]	Issue Date	Name of Patentee or Applicant of cited Document	Pages,Columns,Lines where Relevant Passages or Relevant Figures Appear
	1	8300681	B2	2012-10-30	Petrovic et al.	

If you wish to add additional U.S. Patent citation information please click the Add button. Add

U.S.PATENT APPLICATION PUBLICATIONS Remove

Examiner Initial*	Cite No	Publication Number	Kind Code[1]	Publication Date	Name of Patentee or Applicant of cited Document	Pages,Columns,Lines where Relevant Passages or Relevant Figures Appear
	1	20070111661	A1	2007-05-17	Bargroff et al.	

If you wish to add additional U.S. Published Application citation information please click the Add button. Add

FOREIGN PATENT DOCUMENTS Remove

Examiner Initial*	Cite No	Foreign Document Number[3]	Country Code[2] ¡	Kind Code[4]	Publication Date	Name of Patentee or Applicant of cited Document	Pages,Columns,Lines where Relevant Passages or Relevant Figures Appear	T[5]
	1	2087623	EP	A2	2009-08-12	RF Magic Inc.		☐

If you wish to add additional Foreign Patent Document citation information please click the Add button Add

NON-PATENT LITERATURE DOCUMENTS Remove

Examiner Initials*	Cite No	Include name of the author (in CAPITAL LETTERS), title of the article (when appropriate), title of the item (book, magazine, journal, serial, symposium, catalog, etc), date, pages(s), volume-issue number(s), publisher, city and/or country where published.	T[5]

INFORMATION DISCLOSURE STATEMENT BY APPLICANT (Not for submission under 37 CFR 1.99)	Application Number	14614543
	Filing Date	2015-02-05
	First Named Inventor	Madhukar Reddy
	Art Unit	
	Examiner Name	
	Attorney Docket Number	28427US04

	1		☐

If you wish to add additional non-patent literature document citation information please click the Add button Add

EXAMINER SIGNATURE

Examiner Signature		Date Considered	

*EXAMINER: Initial if reference considered, whether or not citation is in conformance with MPEP 609. Draw line through a citation if not in conformance and not considered. Include copy of this form with next communication to applicant.

[1] See Kind Codes of USPTO Patent Documents at www.USPTO.GOV or MPEP 901.04. [2] Enter office that issued the document, by the two-letter code (WIPO Standard ST.3). [3] For Japanese patent documents, the indication of the year of the reign of the Emperor must precede the serial number of the patent document. [4] Kind of document by the appropriate symbols as indicated on the document under WIPO Standard ST.16 if possible. [5] Applicant is to place a check mark here if English language translation is attached.

INFORMATION DISCLOSURE STATEMENT BY APPLICANT (Not for submission under 37 CFR 1.99)	Application Number	14614543
	Filing Date	2015-02-05
	First Named Inventor	Madhukar Reddy
	Art Unit	
	Examiner Name	
	Attorney Docket Number	28427US04

CERTIFICATION STATEMENT

Please see 37 CFR 1.97 and 1.98 to make the appropriate selection(s):

☐ That each item of information contained in the information disclosure statement was first cited in any communication from a foreign patent office in a counterpart foreign application not more than three months prior to the filing of the information disclosure statement. See 37 CFR 1.97(e)(1).

OR

☐ That no item of information contained in the information disclosure statement was cited in a communication from a foreign patent office in a counterpart foreign application, and, to the knowledge of the person signing the certification after making reasonable inquiry, no item of information contained in the information disclosure statement was known to any individual designated in 37 CFR 1.56(c) more than three months prior to the filing of the information disclosure statement. See 37 CFR 1.97(e)(2).

☐ See attached certification statement.

☐ The fee set forth in 37 CFR 1.17 (p) has been submitted herewith.

☒ A certification statement is not submitted herewith.

SIGNATURE

A signature of the applicant or representative is required in accordance with CFR 1.33, 10.18. Please see CFR 1.4(d) for the form of the signature.

Signature	/Chad M. Gilles/	Date (YYYY-MM-DD)	2015-02-10
Name/Print	Chad M. Gilles	Registration Number	60590

This collection of information is required by 37 CFR 1.97 and 1.98. The information is required to obtain or retain a benefit by the public which is to file (and by the USPTO to process) an application. Confidentiality is governed by 35 U.S.C. 122 and 37 CFR 1.14. This collection is estimated to take 1 hour to complete, including gathering, preparing and submitting the completed application form to the USPTO. Time will vary depending upon the individual case. Any comments on the amount of time you require to complete this form and/or suggestions for reducing this burden, should be sent to the Chief Information Officer, U.S. Patent and Trademark Office, U.S. Department of Commerce, P.O. Box 1450, Alexandria, VA 22313-1450. DO NOT SEND FEES OR COMPLETED FORMS TO THIS ADDRESS. **SEND TO: Commissioner for Patents, P.O. Box 1450, Alexandria, VA 22313-1450.**

Privacy Act Statement

The Privacy Act of 1974 (P.L. 93-579) requires that you be given certain information in connection with your submission of the attached form related to a patent application or patent. Accordingly, pursuant to the requirements of the Act, please be advised that: (1) the general authority for the collection of this information is 35 U.S.C. 2(b)(2); (2) furnishing of the information solicited is voluntary; and (3) the principal purpose for which the information is used by the U.S. Patent and Trademark Office is to process and/or examine your submission related to a patent application or patent. If you do not furnish the requested information, the U.S. Patent and Trademark Office may not be able to process and/or examine your submission, which may result in termination of proceedings or abandonment of the application or expiration of the patent.

The information provided by you in this form will be subject to the following routine uses:

1. The information on this form will be treated confidentially to the extent allowed under the Freedom of Information Act (5 U.S.C. 552) and the Privacy Act (5 U.S.C. 552a). Records from this system of records may be disclosed to the Department of Justice to determine whether the Freedom of Information Act requires disclosure of these record s.

2. A record from this system of records may be disclosed, as a routine use, in the course of presenting evidence to a court, magistrate, or administrative tribunal, including disclosures to opposing counsel in the course of settlement negotiations.

3. A record in this system of records may be disclosed, as a routine use, to a Member of Congress submitting a request involving an individual, to whom the record pertains, when the individual has requested assistance from the Member with respect to the subject matter of the record.

4. A record in this system of records may be disclosed, as a routine use, to a contractor of the Agency having need for the information in order to perform a contract. Recipients of information shall be required to comply with the requirements of the Privacy Act of 1974, as amended, pursuant to 5 U.S.C. 552a(m).

5. A record related to an International Application filed under the Patent Cooperation Treaty in this system of records may be disclosed, as a routine use, to the International Bureau of the World Intellectual Property Organization, pursuant to the Patent Cooperation Treaty.

6. A record in this system of records may be disclosed, as a routine use, to another federal agency for purposes of National Security review (35 U.S.C. 181) and for review pursuant to the Atomic Energy Act (42 U.S.C. 218(c)).

7. A record from this system of records may be disclosed, as a routine use, to the Administrator, General Services, or his/her designee, during an inspection of records conducted by GSA as part of that agency's responsibility to recommend improvements in records management practices and programs, under authority of 44 U.S.C. 2904 and 2906. Such disclosure shall be made in accordance with the GSA regulations governing inspection of records for this purpose, and any other relevant (i.e., GSA or Commerce) directive. Such disclosure shall not be used to make determinations about individuals.

8. A record from this system of records may be disclosed, as a routine use, to the public after either publication of the application pursuant to 35 U.S.C. 122(b) or issuance of a patent pursuant to 35 U.S.C. 151. Further, a record may be disclosed, subject to the limitations of 37 CFR 1.14, as a routine use, to the public if the record was filed in an application which became abandoned or in which the proceedings were terminated and which application is referenced by either a published application, an application open to public inspections or an issued patent.

9. A record from this system of records may be disclosed, as a routine use, to a Federal, State, or local law enforcement agency, if the USPTO becomes aware of a violation or potential violation of law or regulation.

Espacenet

Bibliographic data: EP2087623 (A2) — 2009-08-12

SATELLITE SIGNAL FREQUENCY TRANSLATION AND STACKING

Inventor(s): PETROVIC BRANISLAV [US]; HANCOCK DALE [US]; GOLDBLATT JEREMY [US]; BARGROFF KEITH [US] ± (PETROVIC, BRANISLAV, ; HANCOCK, DALE, ; GOLDBLATT, JEREMY, ; BARGROFF, KEITH)

Applicant(s): R F MAGIC INC [US] ± (R.F. MAGIC INC, ; RF MAGIC, INC)

Classification: **- international:** ***H03J1/00; H04B1/28; H04H40/90***
- cooperative: **H04B1/28**; **H04H40/90**

Application number: EP20070870121 20071231

Priority number (s): WO2007US89192 20071231 ; US20060864352P 20061103 ; US20070885814P 20070119 ; US20070886933P 20070128

Also published as: EP2087623 (B1) US2008112385 (A1) US2012099623 (A1) US8892026 (B2) WO2008064371 (A2) more

Abstract not available for EP2087623 (A2)
Abstract of corresponding document: US2008112385 (A1)

Circuits, systems, and methods for assembling a composite signal include a frequency translation circuit coupled to receive an input signal and operable to generate a plurality of frequency-translated versions of the input signal at a respective plurality of different frequencies, the plurality of frequency-translated input signals defining a group of frequency translated signals. The plurality of frequency translated signals may each be processed to provide a composite signal.

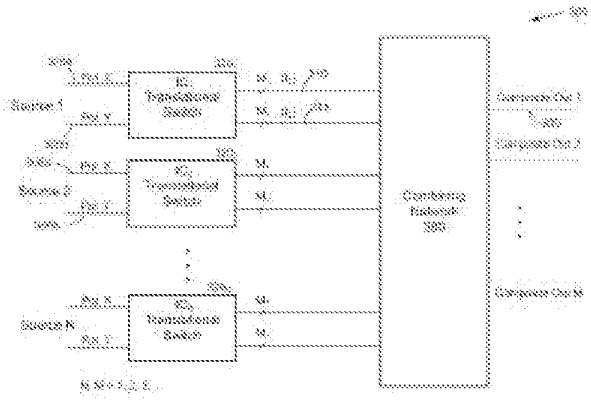

(19) Europäisches Patentamt
European Patent Office
Office européen des brevets

(11) Veröffentlichungsnummer:
(11) Publication number: **EP 2 087 623 A0**
(11) Numéro de publication:

Internationale Anmeldung veröffentlicht durch die Weltorganisation für geistiges Eigentum unter der Nummer:

WO 2008/064371 (Art. 153(3) EPÜ).

International application published by the World Intellectual Property Organization under number:

WO 2008/064371 (Art. 153(3) EPC).

Demande internationale publiée par l'Organisation Mondiale de la Propriété Intellectuelle sous le numéro:

WO 2008/064371 (art. 153(3) CBE).

Electronic Acknowledgement Receipt

EFS ID:	21447138
Application Number:	14614543
International Application Number:	
Confirmation Number:	5785
Title of Invention:	WIDEBAND TUNER ARCHITECTURE
First Named Inventor/Applicant Name:	Madhukar Reddy
Customer Number:	23446
Filer:	Chad M. Gilles/Laura Foley
Filer Authorized By:	Chad M. Gilles
Attorney Docket Number:	28427US04
Receipt Date:	10-FEB-2015
Filing Date:	
Time Stamp:	09:58:59
Application Type:	Utility under 35 USC 111(a)

Payment information:

Submitted with Payment	no

File Listing:

Document Number	Document Description	File Name	File Size(Bytes)/ Message Digest	Multi Part /.zip	Pages (if appl.)
1	Information Disclosure Statement (IDS) Form (SB08)	28427US04_IDS__sb08a_EFS-WEB.pdf	612298 bd13fe91bf17a2e635f435e0e2221e015aeb7033	no	4

Warnings:

Information:

2	Foreign Reference	EP2087623A2.pdf	112213 112c7af198fa095a19b1da28e1827b7e61c79aef	no	2
Warnings:					
Information:					
		Total Files Size (in bytes):	724511		

This Acknowledgement Receipt evidences receipt on the noted date by the USPTO of the indicated documents, characterized by the applicant, and including page counts, where applicable. It serves as evidence of receipt similar to a Post Card, as described in MPEP 503.

New Applications Under 35 U.S.C. 111
If a new application is being filed and the application includes the necessary components for a filing date (see 37 CFR 1.53(b)-(d) and MPEP 506), a Filing Receipt (37 CFR 1.54) will be issued in due course and the date shown on this Acknowledgement Receipt will establish the filing date of the application.

National Stage of an International Application under 35 U.S.C. 371
If a timely submission to enter the national stage of an international application is compliant with the conditions of 35 U.S.C. 371 and other applicable requirements a Form PCT/DO/EO/903 indicating acceptance of the application as a national stage submission under 35 U.S.C. 371 will be issued in addition to the Filing Receipt, in due course.

New International Application Filed with the USPTO as a Receiving Office
If a new international application is being filed and the international application includes the necessary components for an international filing date (see PCT Article 11 and MPEP 1810), a Notification of the International Application Number and of the International Filing Date (Form PCT/RO/105) will be issued in due course, subject to prescriptions concerning national security, and the date shown on this Acknowledgement Receipt will establish the international filing date of the application.

UNITED STATES PATENT AND TRADEMARK OFFICE

UNITED STATES DEPARTMENT OF COMMERCE
United States Patent and Trademark Office
Address: COMMISSIONER FOR PATENTS
P.O. Box 1450
Alexandria, Virginia 22313-1450
www.uspto.gov

APPLICATION NUMBER	FILING or 371(c) DATE	GRP ART UNIT	FIL FEE REC'D	ATTY.DOCKET.NO	TOT CLAIMS	IND CLAIMS
14/614,543	02/05/2015	2631	730	28427US04	20	2

CONFIRMATION NO. 5785

23446
MCANDREWS HELD & MALLOY, LTD
500 WEST MADISON STREET
SUITE 3400
CHICAGO, IL 60661

FILING RECEIPT

OC000000073501362

Date Mailed: 02/25/2015

Receipt is acknowledged of this non-provisional patent application. The application will be taken up for examination in due course. Applicant will be notified as to the results of the examination. Any correspondence concerning the application must include the following identification information: the U.S. APPLICATION NUMBER, FILING DATE, NAME OF APPLICANT, and TITLE OF INVENTION. Fees transmitted by check or draft are subject to collection. Please verify the accuracy of the data presented on this receipt. **If an error is noted on this Filing Receipt, please submit a written request for a Filing Receipt Correction. Please provide a copy of this Filing Receipt with the changes noted thereon. If you received a "Notice to File Missing Parts" for this application, please submit any corrections to this Filing Receipt with your reply to the Notice. When the USPTO processes the reply to the Notice, the USPTO will generate another Filing Receipt incorporating the requested corrections**

Inventor(s)

Madhukar Reddy, Carlsbad, CA;
Curtis Ling, Carlsbad, CA;
Tim Gallagher, Carlsbad, CA;

Applicant(s)

MaxLinear, Inc., Carlsbad, CA

Power of Attorney: The patent practitioners associated with Customer Number 23446

Domestic Priority data as claimed by applicant

This application is a CON of 13/962,871 08/08/2013
which is a CON of 12/762,900 04/19/2010 PAT 8526898
which claims benefit of 61/170,526 04/17/2009

Foreign Applications for which priority is claimed (You may be eligible to benefit from the **Patent Prosecution Highway** program at the USPTO. Please see http://www.uspto.gov for more information.) - None.
Foreign application information must be provided in an Application Data Sheet in order to constitute a claim to foreign priority. See 37 CFR 1.55 and 1.76.

Permission to Access - A proper **Authorization to Permit Access to Application by Participating Offices** (PTO/SB/39 or its equivalent) has been received by the USPTO.

If Required, Foreign Filing License Granted: 02/19/2015
The country code and number of your priority application, to be used for filing abroad under the Paris Convention, is **US 14/614,543**
Projected Publication Date: 06/04/2015

Non-Publication Request: No

Early Publication Request: No
**** SMALL ENTITY ****
Title

WIDEBAND TUNER ARCHITECTURE

Preliminary Class

375

Statement under 37 CFR 1.55 or 1.78 for AIA (First Inventor to File) Transition Applications: No

PROTECTING YOUR INVENTION OUTSIDE THE UNITED STATES

Since the rights granted by a U.S. patent extend only throughout the territory of the United States and have no effect in a foreign country, an inventor who wishes patent protection in another country must apply for a patent in a specific country or in regional patent offices. Applicants may wish to consider the filing of an international application under the Patent Cooperation Treaty (PCT). An international (PCT) application generally has the same effect as a regular national patent application in each PCT-member country. The PCT process **simplifies** the filing of patent applications on the same invention in member countries, but **does not result** in a grant of "an international patent" and does not eliminate the need of applicants to file additional documents and fees in countries where patent protection is desired.

Almost every country has its own patent law, and a person desiring a patent in a particular country must make an application for patent in that country in accordance with its particular laws. Since the laws of many countries differ in various respects from the patent law of the United States, applicants are advised to seek guidance from specific foreign countries to ensure that patent rights are not lost prematurely.

Applicants also are advised that in the case of inventions made in the United States, the Director of the USPTO must issue a license before applicants can apply for a patent in a foreign country. The filing of a U.S. patent application serves as a request for a foreign filing license. The application's filing receipt contains further information and guidance as to the status of applicant's license for foreign filing.

Applicants may wish to consult the USPTO booklet, "General Information Concerning Patents" (specifically, the section entitled "Treaties and Foreign Patents") for more information on timeframes and deadlines for filing foreign patent applications. The guide is available either by contacting the USPTO Contact Center at 800-786-9199, or it can be viewed on the USPTO website at http://www.uspto.gov/web/offices/pac/doc/general/index.html.

For information on preventing theft of your intellectual property (patents, trademarks and copyrights), you may wish to consult the U.S. Government website, http://www.stopfakes.gov. Part of a Department of Commerce initiative, this website includes self-help "toolkits" giving innovators guidance on how to protect intellectual property in specific countries such as China, Korea and Mexico. For questions regarding patent enforcement issues, applicants may call the U.S. Government hotline at 1-866-999-HALT (1-866-999-4258).

LICENSE FOR FOREIGN FILING UNDER

Title 35, United States Code, Section 184

Title 37, Code of Federal Regulations, 5.11 & 5.15

GRANTED

The applicant has been granted a license under 35 U.S.C. 184, if the phrase "IF REQUIRED, FOREIGN FILING LICENSE GRANTED" followed by a date appears on this form. Such licenses are issued in all applications where the conditions for issuance of a license have been met, regardless of whether or not a license may be required as set forth in 37 CFR 5.15. The scope and limitations of this license are set forth in 37 CFR 5.15(a) unless an earlier license has been issued under 37 CFR 5.15(b). The license is subject to revocation upon written notification. The date indicated is the effective date of the license, unless an earlier license of similar scope has been granted under 37 CFR 5.13 or 5.14.

This license is to be retained by the licensee and may be used at any time on or after the effective date thereof unless it is revoked. This license is automatically transferred to any related applications(s) filed under 37 CFR 1.53(d). This license is not retroactive.

The grant of a license does not in any way lessen the responsibility of a licensee for the security of the subject matter as imposed by any Government contract or the provisions of existing laws relating to espionage and the national security or the export of technical data. Licensees should apprise themselves of current regulations especially with respect to certain countries, of other agencies, particularly the Office of Defense Trade Controls, Department of State (with respect to Arms, Munitions and Implements of War (22 CFR 121-128)); the Bureau of Industry and Security, Department of Commerce (15 CFR parts 730-774); the Office of Foreign AssetsControl, Department of Treasury (31 CFR Parts 500+) and the Department of Energy.

NOT GRANTED

No license under 35 U.S.C. 184 has been granted at this time, if the phrase "IF REQUIRED, FOREIGN FILING LICENSE GRANTED" DOES NOT appear on this form. Applicant may still petition for a license under 37 CFR 5.12, if a license is desired before the expiration of 6 months from the filing date of the application. If 6 months has lapsed from the filing date of this application and the licensee has not received any indication of a secrecy order under 35 U.S.C. 181, the licensee may foreign file the application pursuant to 37 CFR 5.15(b).

SelectUSA

The United States represents the largest, most dynamic marketplace in the world and is an unparalleled location for business investment, innovation, and commercialization of new technologies. The U.S. offers tremendous resources and advantages for those who invest and manufacture goods here. Through SelectUSA, our nation works to promote and facilitate business investment. SelectUSA provides information assistance to the international investor community; serves as an ombudsman for existing and potential investors; advocates on behalf of U.S. cities, states, and regions competing for global investment; and counsels U.S. economic development organizations on investment attraction best practices. To learn more about why the United States is the best country in the world to develop technology, manufacture products, deliver services, and grow your business, visit http://www.SelectUSA.gov or call +1-202-482-6800.

PATENT APPLICATION FEE DETERMINATION RECORD

Substitute for Form PTO-875

Application or Docket Number
14/614,543

APPLICATION AS FILED - PART I

FOR	(Column 1) NUMBER FILED	(Column 2) NUMBER EXTRA	SMALL ENTITY RATE($)	SMALL ENTITY FEE($)	OR	OTHER THAN SMALL ENTITY RATE($)	OTHER THAN SMALL ENTITY FEE($)
BASIC FEE (37 CFR 1.16(a), (b), or (c))	N/A	N/A	N/A	70		N/A	
SEARCH FEE (37 CFR 1.16(k), (i), or (m))	N/A	N/A	N/A	300		N/A	
EXAMINATION FEE (37 CFR 1.16(o), (p), or (q))	N/A	N/A	N/A	360		N/A	
TOTAL CLAIMS (37 CFR 1.16(i))	20 minus 20 =	*	x 40 =	0.00	OR		
INDEPENDENT CLAIMS (37 CFR 1.16(h))	2 minus 3 =	*	x 210 =	0.00			
APPLICATION SIZE FEE (37 CFR 1.16(s))	If the specification and drawings exceed 100 sheets of paper, the application size fee due is $310 ($155 for small entity) for each additional 50 sheets or fraction thereof. See 35 U.S.C. 41(a)(1)(G) and 37 CFR 1.16(s).			0.00			
MULTIPLE DEPENDENT CLAIM PRESENT (37 CFR 1.16(j))				0.00			
* If the difference in column 1 is less than zero, enter "0" in column 2.			TOTAL	730		TOTAL	

APPLICATION AS AMENDED - PART II

		(Column 1) CLAIMS REMAINING AFTER AMENDMENT		(Column 2) HIGHEST NUMBER PREVIOUSLY PAID FOR	(Column 3) PRESENT EXTRA	SMALL ENTITY RATE($)	SMALL ENTITY ADDITIONAL FEE($)	OR	OTHER THAN SMALL ENTITY RATE($)	OTHER THAN SMALL ENTITY ADDITIONAL FEE($)
AMENDMENT A	Total (37 CFR 1.16(i))	*	Minus	**	=	x =		OR	x =	
AMENDMENT A	Independent (37 CFR 1.16(h))	*	Minus	***	=	x =		OR	x =	
AMENDMENT A	Application Size Fee (37 CFR 1.16(s))									
AMENDMENT A	FIRST PRESENTATION OF MULTIPLE DEPENDENT CLAIM (37 CFR 1.16(j))							OR		
						TOTAL ADD'L FEE		OR	TOTAL ADD'L FEE	

		(Column 1) CLAIMS REMAINING AFTER AMENDMENT		(Column 2) HIGHEST NUMBER PREVIOUSLY PAID FOR	(Column 3) PRESENT EXTRA	RATE($)	ADDITIONAL FEE($)	OR	RATE($)	ADDITIONAL FEE($)
AMENDMENT B	Total (37 CFR 1.16(i))	*	Minus	**	=	x =		OR	x =	
AMENDMENT B	Independent (37 CFR 1.16(h))	*	Minus	***	=	x =		OR	x =	
AMENDMENT B	Application Size Fee (37 CFR 1.16(s))									
AMENDMENT B	FIRST PRESENTATION OF MULTIPLE DEPENDENT CLAIM (37 CFR 1.16(j))							OR		
						TOTAL ADD'L FEE		OR	TOTAL ADD'L FEE	

* If the entry in column 1 is less than the entry in column 2, write "0" in column 3.
** If the "Highest Number Previously Paid For" IN THIS SPACE is less than 20, enter "20".
*** If the "Highest Number Previously Paid For" IN THIS SPACE is less than 3, enter "3".
The "Highest Number Previously Paid For" (Total or Independent) is the highest found in the appropriate box in column 1.

To: mhmpto@mcandrews-ip.com,,
From: PAIR_eOfficeAction@uspto.gov
Cc: PAIR_eOfficeAction@uspto.gov
Subject: Private PAIR Correspondence Notification for Customer Number 23446

Feb 25, 2015 05:19:37 AM

Dear PAIR Customer:

MCANDREWS HELD & MALLOY, LTD
500 WEST MADISON STREET
SUITE 3400
CHICAGO, IL 60661
UNITED STATES

The following USPTO patent application(s) associated with your Customer Number, 23446 , have new outgoing correspondence. This correspondence is now available for viewing in Private PAIR.

The official date of notification of the outgoing correspondence will be indicated on the form PTOL-90 accompanying the correspondence.

Disclaimer:
The list of documents shown below is provided as a courtesy and is not part of the official file wrapper. The content of the images shown in PAIR is the official record.

Application	Document	Mailroom Date	Attorney Docket No.
14614543	APP.FILE.REC	02/25/2015	28427US04

To view your correspondence online or update your email addresses, please visit us anytime at https://sportal.uspto.gov/secure/myportal/privatepair.

If you have any questions, please email the Electronic Business Center (EBC) at EBC@uspto.gov with 'e-Office Action' on the subject line or call 1-866-217-9197 during the following hours:

Monday - Friday 6:00 a.m. to 12:00 a.m.

Thank you for prompt attention to this notice,

UNITED STATES PATENT AND TRADEMARK OFFICE

PATENT APPLICATION INFORMATION RETRIEVAL SYSTEM

IN THE UNITED STATES PATENT AND TRADEMARK OFFICE
Attorney Docket No. 28427US04

In the Application of:

Madhukar Reddy, et al.

Serial No.: 14/614,543

Filed: February 5, 2015

Title: WIDEBAND TUNER ARCHITECTURE

Group Art Unit: 2631

Confirmation No.: 5785

Customer No.: 23446

PRELIMINARY AMENDMENT

Applicant submits this Preliminary Amendment in connection with the above-identified continuation application ("Instant Application").

I. CONTENTS OF THIS CORRESPONDENCE

Amendments to the specification begin on page 2.

Amendments to the Specification:

A. Please replace paragraph [0001] with the following amended paragraph:

[0001] This application is a continuation of U.S. patent application 13/962,871 filed on August 08, 2013, which is a continuation of U.S. patent application 12/762,900 filed on April ~~14~~ 19, 2010 (now U.S. Patent 8,526,898), which claims the benefit of priority to U.S. provisional application 61/170,526 filed April 17, 2009, now expired. Each of the above referenced documents is hereby incorporated by reference in its entirety.

The Commissioner is hereby authorized to charge any fees required by this submission including any extra claims fees, to the deposit account of McAndrews, Held & Malloy, Ltd., Account No. 13-0017.

Respectfully submitted,

Date: February 26, 2015

/Chad M. Gilles /
Chad M. Gilles
Reg. No. 60,590

McAndrews, Held & Malloy, Ltd.
500 W. Madison Street - Suite 3400
Chicago, Illinois 60661
(312)-775-8000

Electronic Acknowledgement Receipt

EFS ID:	21606260
Application Number:	14614543
International Application Number:	
Confirmation Number:	5785
Title of Invention:	WIDEBAND TUNER ARCHITECTURE
First Named Inventor/Applicant Name:	Madhukar Reddy
Customer Number:	23446
Filer:	Chad M. Gilles/Laura Foley
Filer Authorized By:	Chad M. Gilles
Attorney Docket Number:	28427US04
Receipt Date:	26-FEB-2015
Filing Date:	05-FEB-2015
Time Stamp:	12:07:55
Application Type:	Utility under 35 USC 111(a)

Payment information:

Submitted with Payment	no

File Listing:

Document Number	Document Description	File Name	File Size(Bytes)/ Message Digest	Multi Part /.zip	Pages (if appl.)
1		28427US04_Prelim_Amendment.pdf	21005 2c047aef2d2022c9ba4f22e22ff9479042bf50cc	yes	2

	Multipart Description/PDF files in .zip description		
	Document Description	**Start**	**End**
	Preliminary Amendment	1	1
	Specification	2	2
Warnings:			
Information:			
	Total Files Size (in bytes):	21005	

This Acknowledgement Receipt evidences receipt on the noted date by the USPTO of the indicated documents, characterized by the applicant, and including page counts, where applicable. It serves as evidence of receipt similar to a Post Card, as described in MPEP 503.

<u>New Applications Under 35 U.S.C. 111</u>
If a new application is being filed and the application includes the necessary components for a filing date (see 37 CFR 1.53(b)-(d) and MPEP 506), a Filing Receipt (37 CFR 1.54) will be issued in due course and the date shown on this Acknowledgement Receipt will establish the filing date of the application.

<u>National Stage of an International Application under 35 U.S.C. 371</u>
If a timely submission to enter the national stage of an international application is compliant with the conditions of 35 U.S.C. 371 and other applicable requirements a Form PCT/DO/EO/903 indicating acceptance of the application as a national stage submission under 35 U.S.C. 371 will be issued in addition to the Filing Receipt, in due course.

<u>New International Application Filed with the USPTO as a Receiving Office</u>
If a new international application is being filed and the international application includes the necessary components for an international filing date (see PCT Article 11 and MPEP 1810), a Notification of the International Application Number and of the International Filing Date (Form PCT/RO/105) will be issued in due course, subject to prescriptions concerning national security, and the date shown on this Acknowledgement Receipt will establish the international filing date of the application.

UNITED STATES PATENT AND TRADEMARK OFFICE

Commissioner for Patents
United States Patent and Trademark Office
P.O. Box 1450
Alexandria, VA 22313-1450
www.uspto.gov

MCANDREWS HELD & MALLOY, LTD
500 WEST MADISON STREET
SUITE 3400
CHICAGO IL 60661

MAILED
MAR 05 2015
OFFICE OF PETITIONS

Doc Code: TRACK1.GRANT

Decision Granting Request for Prioritized Examination (Track I or After RCE)	Application No.: 14/614,543

1. THE REQUEST FILED February 05, 2015 IS **GRANTED.**

The above-identified application has met the requirements for prioritized examination
A. ☒ for an original nonprovisional application (Track I).
B. ☐ for an application undergoing continued examination (RCE).

2. **The above-identified application will undergo prioritized examination.** The application will be accorded special status throughout its entire course of prosecution until one of the following occurs:

A. filing a **petition for extension of time** to extend the time period for filing a reply;
B. filing an **amendment to amend the application to contain more than four independent claims, more than thirty total claims**, or a multiple dependent claim;
C. filing a **request for continued examination**;
D. filing a notice of appeal;
E. filing a request for suspension of action;
F. mailing of a notice of allowance;
G. mailing of a final Office action;
H. completion of examination as defined in 37 CFR 41.102; or
I. abandonment of the application.

Telephone inquiries with regard to this decision should be directed to **Michelle R. Eason** at (571) 272-4231. In his/her absence, calls may be directed to Brian W. Brown at (571) 272-5338.

/Michelle R. Eason/
(*Signature*)

Paralegal Specialist, Office of Petitions
(Title)

U.S. Patent and Trademark Office
PTO-2298 (Rev. 02-2012)

To: mhmpto@mcandrews-ip.com,,
From: PAIR_eOfficeAction@uspto.gov
Cc: PAIR_eOfficeAction@uspto.gov
Subject: Private PAIR Correspondence Notification for Customer Number 23446

Mar 13, 2015 05:36:36 AM

Dear PAIR Customer:

MCANDREWS HELD & MALLOY, LTD
500 WEST MADISON STREET
SUITE 3400
CHICAGO, IL 60661
UNITED STATES

The following USPTO patent application(s) associated with your Customer Number, 23446 , have new outgoing correspondence. This correspondence is now available for viewing in Private PAIR.

The official date of notification of the outgoing correspondence will be indicated on the form PTOL-90 accompanying the correspondence.

Disclaimer:
The list of documents shown below is provided as a courtesy and is not part of the official file wrapper. The content of the images shown in PAIR is the official record.

Application	Document	Mailroom Date	Attorney Docket No.
14614543	TRACK1.GRANT	03/05/2015	28427US04

To view your correspondence online or update your email addresses, please visit us anytime at https://sportal.uspto.gov/secure/myportal/privatepair.

If you have any questions, please email the Electronic Business Center (EBC) at EBC@uspto.gov with 'e-Office Action' on the subject line or call 1-866-217-9197 during the following hours:

Monday - Friday 6:00 a.m. to 12:00 a.m.

Thank you for prompt attention to this notice,

UNITED STATES PATENT AND TRADEMARK OFFICE

PATENT APPLICATION INFORMATION RETRIEVAL SYSTEM

UNITED STATES PATENT AND TRADEMARK OFFICE

UNITED STATES DEPARTMENT OF COMMERCE
United States Patent and Trademark Office
Address: COMMISSIONER FOR PATENTS
P.O. Box 1450
Alexandria, Virginia 22313-1450
www.uspto.gov

APPLICATION NO.	FILING DATE	FIRST NAMED INVENTOR	ATTORNEY DOCKET NO.	CONFIRMATION NO.
14/614,543	02/05/2015	Madhukar Reddy	28427US04	5785

23446 7590 05/14/2015
MCANDREWS HELD & MALLOY, LTD
500 WEST MADISON STREET
SUITE 3400
CHICAGO, IL 60661

EXAMINER
JACKSON, BLANE J

ART UNIT	PAPER NUMBER
2649	

NOTIFICATION DATE	DELIVERY MODE
05/14/2015	ELECTRONIC

Please find below and/or attached an Office communication concerning this application or proceeding.

The time period for reply, if any, is set in the attached communication.

Notice of the Office communication was sent electronically on above-indicated "Notification Date" to the following e-mail address(es):

mhmpto@mcandrews-ip.com

PTOL-90A (Rev. 04/07)

Office Action Summary	Application No. 14/614,543	Applicant(s) REDDY ET AL.	
	Examiner BLANE J. JACKSON	Art Unit 2649	AIA (First Inventor to File) Status No

-- The MAILING DATE of this communication appears on the cover sheet with the correspondence address --

Period for Reply

A SHORTENED STATUTORY PERIOD FOR REPLY IS SET TO EXPIRE 3 MONTHS FROM THE MAILING DATE OF THIS COMMUNICATION.

- Extensions of time may be available under the provisions of 37 CFR 1.136(a). In no event, however, may a reply be timely filed after SIX (6) MONTHS from the mailing date of this communication.
- If NO period for reply is specified above, the maximum statutory period will apply and will expire SIX (6) MONTHS from the mailing date of this communication.
- Failure to reply within the set or extended period for reply will, by statute, cause the application to become ABANDONED (35 U.S.C. § 133). Any reply received by the Office later than three months after the mailing date of this communication, even if timely filed, may reduce any earned patent term adjustment. See 37 CFR 1.704(b).

Status

1)☒ Responsive to communication(s) filed on 02 May 2015.

☐ A declaration(s)/affidavit(s) under **37 CFR 1.130(b)** was/were filed on _____.

2a)☐ This action is **FINAL**. 2b)☒ This action is non-final.

3)☐ An election was made by the applicant in response to a restriction requirement set forth during the interview on _____; the restriction requirement and election have been incorporated into this action.

4)☐ Since this application is in condition for allowance except for formal matters, prosecution as to the merits is closed in accordance with the practice under *Ex parte Quayle*, 1935 C.D. 11, 453 O.G. 213.

Disposition of Claims*

5)☒ Claim(s) 1-20 is/are pending in the application.

5a) Of the above claim(s) _____ is/are withdrawn from consideration.

6)☐ Claim(s) _____ is/are allowed.

7)☒ Claim(s) 1-20 is/are rejected.

8)☐ Claim(s) _____ is/are objected to.

9)☐ Claim(s) _____ are subject to restriction and/or election requirement.

* If any claims have been determined allowable, you may be eligible to benefit from the **Patent Prosecution Highway** program at a participating intellectual property office for the corresponding application. For more information, please see http://www.uspto.gov/patents/init_events/pph/index.jsp or send an inquiry to PPHfeedback@uspto.gov.

Application Papers

10)☐ The specification is objected to by the Examiner.

11)☒ The drawing(s) filed on 02 May 2015 is/are: a)☒ accepted or b)☐ objected to by the Examiner.

Applicant may not request that any objection to the drawing(s) be held in abeyance. See 37 CFR 1.85(a).

Replacement drawing sheet(s) including the correction is required if the drawing(s) is objected to. See 37 CFR 1.121(d).

Priority under 35 U.S.C. § 119

12)☐ Acknowledgment is made of a claim for foreign priority under 35 U.S.C. § 119(a)-(d) or (f).

Certified copies:

a)☐ All b)☐ Some** c)☐ None of the:

1.☐ Certified copies of the priority documents have been received.

2.☐ Certified copies of the priority documents have been received in Application No. _____.

3.☐ Copies of the certified copies of the priority documents have been received in this National Stage application from the International Bureau (PCT Rule 17.2(a)).

** See the attached detailed Office action for a list of the certified copies not received.

Attachment(s)

1) ☒ Notice of References Cited (PTO-892)

2) ☒ Information Disclosure Statement(s) (PTO/SB/08a and/or PTO/SB/08b) Paper No(s)/Mail Date _____.

3) ☐ Interview Summary (PTO-413) Paper No(s)/Mail Date. _____ .

4) ☐ Other: _____.

DETAILED ACTION

The present application is being examined under the pre-AIA first to invent provisions.

Information Disclosure Statement

The Information Disclosure Statement filed 10 February 2015 is made of record.

Double Patenting

The nonstatutory double patenting rejection is based on a judicially created doctrine grounded in public policy (a policy reflected in the statute) so as to prevent the unjustified or improper timewise extension of the "right to exclude" granted by a patent and to prevent possible harassment by multiple assignees. A nonstatutory double patenting rejection is appropriate where the claims at issue are not identical, but at least one examined application claim is not patentably distinct from the reference claim(s) because the examined application claim is either anticipated by, or would have been obvious over, the reference claim(s). See, e.g., *In re Berg*, 140 F.3d 1428, 46 USPQ2d 1226 (Fed. Cir. 1998); *In re Goodman*, 11 F.3d 1046, 29 USPQ2d 2010 (Fed. Cir. 1993); *In re Longi*, 759 F.2d 887, 225 USPQ 645 (Fed. Cir. 1985); *In re Van Ornum*, 686 F.2d 937, 214 USPQ 761 (CCPA 1982); *In re Vogel*, 422 F.2d 438, 164 USPQ 619 (CCPA 1970); and *In re Thorington*, 418 F.2d 528, 163 USPQ 644 (CCPA 1969).

A timely filed terminal disclaimer in compliance with 37 CFR 1.321(c) or 1.321(d) may be used to overcome an actual or provisional rejection based on a nonstatutory

double patenting ground provided the reference application or patent either is shown to be commonly owned with this application, or claims an invention made as a result of activities undertaken within the scope of a joint research agreement. A terminal disclaimer must be signed in compliance with 37 CFR 1.321(b).

The USPTO internet Web site contains terminal disclaimer forms which may be used. Please visit http://www.uspto.gov/forms/. The filing date of the application will determine what form should be used. A web-based eTerminal Disclaimer may be filled out completely online using web-screens. An eTerminal Disclaimer that meets all requirements is auto-processed and approved immediately upon submission. For more information about eTerminal Disclaimers, refer to http://www.uspto.gov/patents/process/file/efs/guidance/eTD-info-I.jsp.

Claims 1-20 are rejected on the ground of nonstatutory double patenting as being unpatentable over claims 1-27 of U.S. Patent No. 8,526,898. Although the claims at issue are not identical, they are not patentably distinct from each other because the instant application comprises claims which are broad in scope and with the same or fewer claim elements than the claims of the parent patent.

Conclusion

With respect to the preceding rejection, the claims as filed comprise potentially allowable subject matter.

Any inquiry concerning this communication or earlier communications from the examiner should be directed to BLANE J. JACKSON whose telephone number is

(571)272-7890. The examiner can normally be reached on Monday through Friday, 8:30 AM-5:30 PM, EST.

If attempts to reach the examiner by telephone are unsuccessful, the examiner's supervisor, Edward Urban can be reached on (571) 272-7899. The fax phone number for the organization where this application or proceeding is assigned is 571-273-8300.

Information regarding the status of an application may be obtained from the Patent Application Information Retrieval (PAIR) system. Status information for published applications may be obtained from either Private PAIR or Public PAIR. Status information for unpublished applications is available through Private PAIR only. For more information about the PAIR system, see http://pair-direct.uspto.gov. Should you have questions on access to the Private PAIR system, contact the Electronic Business Center (EBC) at 866-217-9197 (toll-free). If you would like assistance from a USPTO Customer Service Representative or access to the automated information system, call 800-786-9199 (IN USA OR CANADA) or 571-272-1000.

/BLANE J JACKSON/
Primary Examiner, Art Unit 2649

Notice of References Cited	Application/Control No. 14/614,543	Applicant(s)/Patent Under Reexamination REDDY ET AL.	
	Examiner BLANE J. JACKSON	Art Unit 2649	Page 1 of 1

U.S. PATENT DOCUMENTS

*		Document Number Country Code-Number-Kind Code	Date MM-YYYY	Name	Classification
*	A	US-8,526,898	09-2013	Reddy et al.	455/207
*	B	US-7,599,673	10-2009	Maxim et al.	455/179.1
*	C	US-5,280,636	01-1994	Kelley et al.	455/131
	D	US-			
	E	US-			
	F	US-			
	G	US-			
	H	US-			
	I	US-			
	J	US-			
	K	US-			
	L	US-			
	M	US-			

FOREIGN PATENT DOCUMENTS

*		Document Number Country Code-Number-Kind Code	Date MM-YYYY	Country	Name	Classification
	N					
	O					
	P					
	Q					
	R					
	S					
	T					

NON-PATENT DOCUMENTS

*		Include as applicable: Author, Title Date, Publisher, Edition or Volume, Pertinent Pages)
	U	
	V	
	W	
	X	

*A copy of this reference is not being furnished with this Office action. (See MPEP § 707.05(a).)
Dates in MM-YYYY format are publication dates. Classifications may be US or foreign.

PTO/SB/08a (01-10)
Approved for use through 07/31/2012. OMB 0651-0031
U.S. Patent and Trademark Office; U.S. DEPARTMENT OF COMMERCE
Under the Paperwork Reduction Act of 1995, no persons are required to respond to a collection of information unless it contains a valid OMB control number.

INFORMATION DISCLOSURE STATEMENT BY APPLICANT (Not for submission under 37 CFR 1.99)		
	Application Number	14614543
	Filing Date	2015-02-05
	First Named Inventor	Madhukar Reddy
	Art Unit	
	Examiner Name	
	Attorney Docket Number	28427US04

U.S.PATENTS Remove

Examiner Initial*	Cite No	Patent Number	Kind Code[1]	Issue Date	Name of Patentee or Applicant of cited Document	Pages,Columns,Lines where Relevant Passages or Relevant Figures Appear
/B.J./	1	8300681	B2	2012-10-30	Petrovic et al.	

If you wish to add additional U.S. Patent citation information please click the Add button. Add

U.S.PATENT APPLICATION PUBLICATIONS Remove

Examiner Initial*	Cite No	Publication Number	Kind Code[1]	Publication Date	Name of Patentee or Applicant of cited Document	Pages,Columns,Lines where Relevant Passages or Relevant Figures Appear
/B.J./	1	20070111661	A1	2007-05-17	Bargroff et al.	

If you wish to add additional U.S. Published Application citation information please click the Add button. Add

FOREIGN PATENT DOCUMENTS Remove

Examiner Initial*	Cite No	Foreign Document Number[3]	Country Code[2] i	Kind Code[4]	Publication Date	Name of Patentee or Applicant of cited Document	Pages,Columns,Lines where Relevant Passages or Relevant Figures Appear	T[5]
/B.J./	1	2087623	EP	A2	2009-08-12	RF Magic Inc.		☐

If you wish to add additional Foreign Patent Document citation information please click the Add button Add

NON-PATENT LITERATURE DOCUMENTS Remove

Examiner Initials*	Cite No	Include name of the author (in CAPITAL LETTERS), title of the article (when appropriate), title of the item (book, magazine, journal, serial, symposium, catalog, etc), date, pages(s), volume-issue number(s), publisher, city and/or country where published.	T[5]

Receipt date: 02/10/2015	Application Number	14614543	14614543 - GAU: 2649
INFORMATION DISCLOSURE STATEMENT BY APPLICANT (**Not for submission under 37 CFR 1.99)**	Filing Date	2015-02-05	
	First Named Inventor	Madhukar Reddy	
	Art Unit		
	Examiner Name		
	Attorney Docket Number	28427US04	

	1		☐

If you wish to add additional non-patent literature document citation information please click the Add button **Add**

EXAMINER SIGNATURE

Examiner Signature	/Blane Jackson/	Date Considered	05/08/2015

*EXAMINER: Initial if reference considered, whether or not citation is in conformance with MPEP 609. Draw line through a citation if not in conformance and not considered. Include copy of this form with next communication to applicant.

[1] See Kind Codes of USPTO Patent Documents at www.USPTO.GOV or MPEP 901.04. [2] Enter office that issued the document, by the two-letter code (WIPO Standard ST.3). [3] For Japanese patent documents, the indication of the year of the reign of the Emperor must precede the serial number of the patent document. [4] Kind of document by the appropriate symbols as indicated on the document under WIPO Standard ST.16 if possible. [5] Applicant is to place a check mark here if English language translation is attached.

Receipt date: 02/10/2015	Application Number	14614543	14614543 - GAU: 2649
INFORMATION DISCLOSURE STATEMENT BY APPLICANT (**Not for submission under 37 CFR 1.99)**	Filing Date	2015-02-05	
	First Named Inventor	Madhukar Reddy	
	Art Unit		
	Examiner Name		
	Attorney Docket Number	28427US04	

CERTIFICATION STATEMENT

Please see 37 CFR 1.97 and 1.98 to make the appropriate selection(s):

☐ That each item of information contained in the information disclosure statement was first cited in any communication from a foreign patent office in a counterpart foreign application not more than three months prior to the filing of the information disclosure statement. See 37 CFR 1.97(e)(1).

OR

☐ That no item of information contained in the information disclosure statement was cited in a communication from a foreign patent office in a counterpart foreign application, and, to the knowledge of the person signing the certification after making reasonable inquiry, no item of information contained in the information disclosure statement was known to any individual designated in 37 CFR 1.56(c) more than three months prior to the filing of the information disclosure statement. See 37 CFR 1.97(e)(2).

☐ See attached certification statement.

☐ The fee set forth in 37 CFR 1.17 (p) has been submitted herewith.

☒ A certification statement is not submitted herewith.

SIGNATURE

A signature of the applicant or representative is required in accordance with CFR 1.33, 10.18. Please see CFR 1.4(d) for the form of the signature.

Signature	/Chad M. Gilles/	Date (YYYY-MM-DD)	2015-02-10
Name/Print	Chad M. Gilles	Registration Number	60590

This collection of information is required by 37 CFR 1.97 and 1.98. The information is required to obtain or retain a benefit by the public which is to file (and by the USPTO to process) an application. Confidentiality is governed by 35 U.S.C. 122 and 37 CFR 1.14. This collection is estimated to take 1 hour to complete, including gathering, preparing and submitting the completed application form to the USPTO. Time will vary depending upon the individual case. Any comments on the amount of time you require to complete this form and/or suggestions for reducing this burden, should be sent to the Chief Information Officer, U.S. Patent and Trademark Office, U.S. Department of Commerce, P.O. Box 1450, Alexandria, VA 22313-1450. DO NOT SEND FEES OR COMPLETED FORMS TO THIS ADDRESS. **SEND TO: Commissioner for Patents, P.O. Box 1450, Alexandria, VA 22313-1450.**

Privacy Act Statement

The Privacy Act of 1974 (P.L. 93-579) requires that you be given certain information in connection with your submission of the attached form related to a patent application or patent. Accordingly, pursuant to the requirements of the Act, please be advised that: (1) the general authority for the collection of this information is 35 U.S.C. 2(b)(2); (2) furnishing of the information solicited is voluntary; and (3) the principal purpose for which the information is used by the U.S. Patent and Trademark Office is to process and/or examine your submission related to a patent application or patent. If you do not furnish the requested information, the U.S. Patent and Trademark Office may not be able to process and/or examine your submission, which may result in termination of proceedings or abandonment of the application or expiration of the patent.

The information provided by you in this form will be subject to the following routine uses:

1. The information on this form will be treated confidentially to the extent allowed under the Freedom of Information Act (5 U.S.C. 552) and the Privacy Act (5 U.S.C. 552a). Records from this system of records may be disclosed to the Department of Justice to determine whether the Freedom of Information Act requires disclosure of these record s.

2. A record from this system of records may be disclosed, as a routine use, in the course of presenting evidence to a court, magistrate, or administrative tribunal, including disclosures to opposing counsel in the course of settlement negotiations.

3. A record in this system of records may be disclosed, as a routine use, to a Member of Congress submitting a request involving an individual, to whom the record pertains, when the individual has requested assistance from the Member with respect to the subject matter of the record.

4. A record in this system of records may be disclosed, as a routine use, to a contractor of the Agency having need for the information in order to perform a contract. Recipients of information shall be required to comply with the requirements of the Privacy Act of 1974, as amended, pursuant to 5 U.S.C. 552a(m).

5. A record related to an International Application filed under the Patent Cooperation Treaty in this system of records may be disclosed, as a routine use, to the International Bureau of the World Intellectual Property Organization, pursuant to the Patent Cooperation Treaty.

6. A record in this system of records may be disclosed, as a routine use, to another federal agency for purposes of National Security review (35 U.S.C. 181) and for review pursuant to the Atomic Energy Act (42 U.S.C. 218(c)).

7. A record from this system of records may be disclosed, as a routine use, to the Administrator, General Services, or his/her designee, during an inspection of records conducted by GSA as part of that agency's responsibility to recommend improvements in records management practices and programs, under authority of 44 U.S.C. 2904 and 2906. Such disclosure shall be made in accordance with the GSA regulations governing inspection of records for this purpose, and any other relevant (i.e., GSA or Commerce) directive. Such disclosure shall not be used to make determinations about individuals.

8. A record from this system of records may be disclosed, as a routine use, to the public after either publication of the application pursuant to 35 U.S.C. 122(b) or issuance of a patent pursuant to 35 U.S.C. 151. Further, a record may be disclosed, subject to the limitations of 37 CFR 1.14, as a routine use, to the public if the record was filed in an application which became abandoned or in which the proceedings were terminated and which application is referenced by either a published application, an application open to public inspections or an issued patent.

9. A record from this system of records may be disclosed, as a routine use, to a Federal, State, or local law enforcement agency, if the USPTO becomes aware of a violation or potential violation of law or regulation.

UNITED STATES PATENT AND TRADEMARK OFFICE

UNITED STATES DEPARTMENT OF COMMERCE
United States Patent and Trademark Office
Address: COMMISSIONER FOR PATENTS
P.O. Box 1450
Alexandria, Virginia 22313-1450
www.uspto.gov

BIB DATA SHEET

CONFIRMATION NO. 5785

SERIAL NUMBER	FILING or 371(c) DATE	CLASS	GROUP ART UNIT	ATTORNEY DOCKET NO.
14/614,543	02/05/2015 RULE	348	2649	28427US04

APPLICANTS
MaxLinear, Inc., Carlsbad, CA, Assignee (with 37 CFR 1.172 Interest);

INVENTORS
Madhukar Reddy, Carlsbad, CA;
Curtis Ling, Carlsbad, CA;
Tim Gallagher, Carlsbad, CA;

**** CONTINUING DATA ****************************
This application is a CON of 13/962,871 08/08/2013
which is a CON of 12/762,900 04/19/2010 PAT 8526898
which claims benefit of 61/170,526 04/17/2009

**** FOREIGN APPLICATIONS ****************************

**** IF REQUIRED, FOREIGN FILING LICENSE GRANTED **** ** SMALL ENTITY **
02/19/2015

Foreign Priority claimed	☐ Yes ☑ No		STATE OR COUNTRY	SHEETS DRAWINGS	TOTAL CLAIMS	INDEPENDENT CLAIMS
35 USC 119(a-d) conditions met	☐ Yes ☑ No	☐ Met after Allowance				
Verified and Acknowledged	/BLANE J JACKSON/ Examiner's Signature	Initials	CA	10	20	2

ADDRESS
MCANDREWS HELD & MALLOY, LTD
500 WEST MADISON STREET
SUITE 3400
CHICAGO, IL 60661
UNITED STATES

TITLE
WIDEBAND TUNER ARCHITECTURE

FILING FEE RECEIVED		
730	FEES: Authority has been given in Paper No._____ to charge/credit DEPOSIT ACCOUNT No._____ for following:	☐ All Fees ☐ 1.16 Fees (Filing) ☐ 1.17 Fees (Processing Ext. of time) ☐ 1.18 Fees (Issue) ☐ Other _____ ☐ Credit

BIB (Rev. 05/07).

Search Notes	Application/Control No.	Applicant(s)/Patent Under Reexamination
	14614543	REDDY ET AL.
	Examiner	**Art Unit**
	BLANE J JACKSON	2649

CPC- SEARCHED

Symbol	Date	Examiner

CPC COMBINATION SETS - SEARCHED

Symbol	Date	Examiner
H04B 1/16	05/08/15	BJJ

US CLASSIFICATION SEARCHED

Class	Subclass	Date	Examiner
455	131, 140, 207, 214, 313, 315, 323, 324, 325, 334	05/08/15	BJJ

SEARCH NOTES

Search Notes	Date	Examiner
Review of IDS; review of prior art and similar application 14/617,973 to FAOM	05/08/15	BJJ

INTERFERENCE SEARCH

US Class/ CPC Symbol	US Subclass / CPC Group	Date	Examiner

Index of Claims	Application/Control No.	Applicant(s)/Patent Under Reexamination
	14614543	REDDY ET AL.
	Examiner	**Art Unit**
	BLANE J JACKSON	2649

✓	Rejected	-	Cancelled	N	Non-Elected	A	Appeal
=	Allowed	÷	Restricted	I	Interference	O	Objected

☐ Claims renumbered in the same order as presented by applicant ☐ CPA ☐ T.D. ☐ R.1.47

CLAIM		DATE								
Final	Original	05/08/2015								
	1	✓								
	2	✓								
	3	✓								
	4	✓								
	5	✓								
	6	✓								
	7	✓								
	8	✓								
	9	✓								
	10	✓								
	11	✓								
	12	✓								
	13	✓								
	14	✓								
	15	✓								
	16	✓								
	17	✓								
	18	✓								
	19	✓								
	20	✓								

EAST Search History

EAST Search History (Prior Art)

Ref #	Hits	Search Query	DBs	Default Operator	Plurals	Time Stamp
L1	15	"8300681".pn.	US-PGPUB; USPAT; USOCR; FPRS; EPO; JPO; DERWENT; IBM_TDB	OR	ON	2015/05/08 17:41
L2	4	"20070111661"	US-PGPUB; USPAT; USOCR; FPRS; EPO; JPO; DERWENT; IBM_TDB	OR	ON	2015/05/08 17:42
L3	34	"2087623"	US-PGPUB; USPAT; USOCR; FPRS; EPO; JPO; DERWENT; IBM_TDB	OR	ON	2015/05/08 17:42
L4	7	Reddy-Madhukar.in. and wideband adj3 receiver	US-PGPUB; USPAT; USOCR; FPRS; EPO; JPO; DERWENT; IBM_TDB	OR	ON	2015/05/08 17:44

5/8/2015 5:45:04 PM

To: mhmpto@mcandrews-ip.com,,
From: PAIR_eOfficeAction@uspto.gov
Cc: PAIR_eOfficeAction@uspto.gov
Subject: Private PAIR Correspondence Notification for Customer Number 23446

May 14, 2015 05:30:21 AM

Dear PAIR Customer:

MCANDREWS HELD & MALLOY, LTD
500 WEST MADISON STREET
SUITE 3400
CHICAGO, IL 60661
UNITED STATES

The following USPTO patent application(s) associated with your Customer Number, 23446 , have new outgoing correspondence. This correspondence is now available for viewing in Private PAIR.

The official date of notification of the outgoing correspondence will be indicated on the form PTOL-90 accompanying the correspondence.

Disclaimer:
The list of documents shown below is provided as a courtesy and is not part of the official file wrapper. The content of the images shown in PAIR is the official record.

Application	Document	Mailroom Date	Attorney Docket No.
14614543	CTNF	05/14/2015	28427US04
	892	05/14/2015	28427US04
	1449	05/14/2015	28427US04

To view your correspondence online or update your email addresses, please visit us anytime at https://sportal.uspto.gov/secure/myportal/privatepair.

If you have any questions, please email the Electronic Business Center (EBC) at EBC@uspto.gov with 'e-Office Action' on the subject line or call 1-866-217-9197 during the following hours:

Monday - Friday 6:00 a.m. to 12:00 a.m.

Thank you for prompt attention to this notice,

UNITED STATES PATENT AND TRADEMARK OFFICE

PATENT APPLICATION INFORMATION RETRIEVAL SYSTEM

IN THE UNITED STATES PATENT AND TRADEMARK OFFICE
(Attorney Docket No. 28427US04)

In the Application of:

Madhukar Reddy et al.

Serial No.: 14/614,543

Filed: February 5, 2015

Title: WIDEBAND TUNER ARCHITECTURE

Examiner: JACKSON, Blane J.

Art Unit: 2649

Confirmation No.: 5785

Customer No.: 23446

RESPONSE UNDER 37 C.F.R. § 1.111

This paper responds to the non-final office action mailed May 14, 2015 ("Office Action") in the above-identified application ("Instant Application"). The only rejections outstanding are obviousness type double patenting rejections, which are obviated by the e-terminal disclaimer submitted herewith.

A Notice of Allowance is courteously solicited.

Respectfully submitted,

Date: May 15, 2015

/Chad M. Gilles/

Chad M. Gilles
Registration No. 60,590
Representative for Applicant

McAndrews, Held & Malloy, Ltd.
500 West Madison Street, 34th Floor
Chicago, Illinois 60661
(312) 775-8000

Electronic Acknowledgement Receipt

EFS ID:	22358195
Application Number:	14614543
International Application Number:	
Confirmation Number:	5785
Title of Invention:	WIDEBAND TUNER ARCHITECTURE
First Named Inventor/Applicant Name:	Madhukar Reddy
Customer Number:	23446
Filer:	Chad M. Gilles/Laura Foley
Filer Authorized By:	Chad M. Gilles
Attorney Docket Number:	28427US04
Receipt Date:	15-MAY-2015
Filing Date:	05-FEB-2015
Time Stamp:	12:49:50
Application Type:	Utility under 35 USC 111(a)

Payment information:

Submitted with Payment	no

File Listing:

Document Number	Document Description	File Name	File Size(Bytes)/ Message Digest	Multi Part /.zip	Pages (if appl.)
1	Amendment/Req. Reconsideration-After Non-Final Reject	28427US04_OA_14MAY2015_Response_with_eterminal_discl.pdf	14297 9cf5a11c2b5cc6e9fbc3a864f6af2505b4e2ba0a	no	1

Warnings:

Information:

Total Files Size (in bytes):	14297

This Acknowledgement Receipt evidences receipt on the noted date by the USPTO of the indicated documents, characterized by the applicant, and including page counts, where applicable. It serves as evidence of receipt similar to a Post Card, as described in MPEP 503.

New Applications Under 35 U.S.C. 111
If a new application is being filed and the application includes the necessary components for a filing date (see 37 CFR 1.53(b)-(d) and MPEP 506), a Filing Receipt (37 CFR 1.54) will be issued in due course and the date shown on this Acknowledgement Receipt will establish the filing date of the application.

National Stage of an International Application under 35 U.S.C. 371
If a timely submission to enter the national stage of an international application is compliant with the conditions of 35 U.S.C. 371 and other applicable requirements a Form PCT/DO/EO/903 indicating acceptance of the application as a national stage submission under 35 U.S.C. 371 will be issued in addition to the Filing Receipt, in due course.

New International Application Filed with the USPTO as a Receiving Office
If a new international application is being filed and the international application includes the necessary components for an international filing date (see PCT Article 11 and MPEP 1810), a Notification of the International Application Number and of the International Filing Date (Form PCT/RO/105) will be issued in due course, subject to prescriptions concerning national security, and the date shown on this Acknowledgement Receipt will establish the international filing date of the application.

Doc Code: DIST.E.FILE **Document Description: Electronic Terminal Disclaimer - Filed**	PTO/SB/26 U.S. Patent and Trademark Office Department of Commerce

Electronic Petition Request	**TERMINAL DISCLAIMER TO OBVIATE A DOUBLE PATENTING REJECTION OVER A "PRIOR" PATENT**
Application Number	14614543
Filing Date	05-Feb-2015
First Named Inventor	Madhukar Reddy
Attorney Docket Number	28427US04
Title of Invention	WIDEBAND TUNER ARCHITECTURE

☒ Filing of terminal disclaimer does not obviate requirement for response under 37 CFR 1.111 to outstanding Office Action

☒ This electronic Terminal Disclaimer is not being used for a Joint Research Agreement.

Owner	Percent Interest
MaxLinear, Inc.	100%

The owner(s) with percent interest listed above in the instant application hereby disclaims, except as provided below, the terminal part of the statutory term of any patent granted on the instant application which would extend beyond the expiration date of the full statutory term of prior patent number(s)

8526898

as the term of said prior patent is presently shortened by any terminal disclaimer. The owner hereby agrees that any patent so granted on the instant application shall be enforceable only for and during such period that it and the prior patent are commonly owned. This agreement runs with any patent granted on the instant application and is binding upon the grantee, its successors or assigns.

In making the above disclaimer, the owner does not disclaim the terminal part of the term of any patent granted on the instant application that would extend to the expiration date of the full statutory term of the prior patent, "as the term of said prior patent is presently shortened by any terminal disclaimer," in the event that said prior patent later:
- expires for failure to pay a maintenance fee;
- is held unenforceable;
- is found invalid by a court of competent jurisdiction;
- is statutorily disclaimed in whole or terminally disclaimed under 37 CFR 1.321;
- has all claims canceled by a reexamination certificate;
- is reissued; or
- is in any manner terminated prior to the expiration of its full statutory term as presently shortened by any terminal disclaimer.

◉ Terminal disclaimer fee under 37 CFR 1.20(d) is included with Electronic Terminal Disclaimer request.

○	I certify, in accordance with 37 CFR 1.4(d)(4), that the terminal disclaimer fee under 37 CFR 1.20(d) required for this terminal disclaimer has already been paid in the above-identified application.

Applicant claims the following fee status:

◉ Small Entity

○ Micro Entity

○ Regular Undiscounted

I hereby declare that all statements made herein of my own knowledge are true and that all statements made on information and belief are believed to be true; and further that these statements were made with the knowledge that willful false statements and the like so made are punishable by fine or imprisonment, or both, under Section 1001 of Title 18 of the United States Code and that such willful false statements may jeopardize the validity of the application or any patent issued thereon.

THIS PORTION MUST BE COMPLETED BY THE SIGNATORY OR SIGNATORIES

I certify, in accordance with 37 CFR 1.4(d)(4) that I am:

◉ An attorney or agent registered to practice before the Patent and Trademark Office who is of record in this application

Registration Number 60590

○ A sole inventor

○ A joint inventor; I certify that I am authorized to sign this submission on behalf of all of the inventors as evidenced by the power of attorney in the application

○ A joint inventor; all of whom are signing this request

Signature	/Chad M. Gilles/
Name	Chad M. Gilles

*Statement under 37 CFR 3.73(b) is required if terminal disclaimer is signed by the assignee (owner).
Form PTO/SB/96 may be used for making this certification. See MPEP § 324.

Electronic Patent Application Fee Transmittal

Application Number:	14614543
Filing Date:	05-Feb-2015
Title of Invention:	WIDEBAND TUNER ARCHITECTURE
First Named Inventor/Applicant Name:	Madhukar Reddy
Filer:	Chad M. Gilles/Laura Foley
Attorney Docket Number:	28427US04

Filed as Small Entity

Filing Fees for Utility under 35 USC 111(a)

Description	Fee Code	Quantity	Amount	Sub-Total in USD($)
Basic Filing:				
Statutory or Terminal Disclaimer	1814	1	160	160
Pages:				
Claims:				
Miscellaneous-Filing:				
Petition:				
Patent-Appeals-and-Interference:				
Post-Allowance-and-Post-Issuance:				

Description	Fee Code	Quantity	Amount	Sub-Total in USD($)
Extension-of-Time:				
Miscellaneous:				
			Total in USD ($)	**160**

Doc Code: DISQ.E.FILE
Document Description: Electronic Terminal Disclaimer – Approved

Application No.: 14614543

Filing Date: 05-Feb-2015

Applicant/Patent under Reexamination: Reddy et al.

Electronic Terminal Disclaimer filed on May 15, 2015

☒ APPROVED

This patent is subject to a terminal disclaimer

☐ DISAPPROVED

Approved/Disapproved by: Electronic Terminal Disclaimer automatically approved by EFS-Web

U.S. Patent and Trademark Office

Electronic Acknowledgement Receipt

EFS ID:	22358248
Application Number:	14614543
International Application Number:	
Confirmation Number:	5785
Title of Invention:	WIDEBAND TUNER ARCHITECTURE
First Named Inventor/Applicant Name:	Madhukar Reddy
Customer Number:	23446
Filer:	Chad M. Gilles/Laura Foley
Filer Authorized By:	Chad M. Gilles
Attorney Docket Number:	28427US04
Receipt Date:	15-MAY-2015
Filing Date:	05-FEB-2015
Time Stamp:	12:54:06
Application Type:	Utility under 35 USC 111(a)

Payment information:

Submitted with Payment	yes
Payment Type	Credit Card
Payment was successfully received in RAM	$160
RAM confirmation Number	9069
Deposit Account	130017
Authorized User	GILLES, CHAD

The Director of the USPTO is hereby authorized to charge indicated fees and credit any overpayment as follows:

Charge any Additional Fees required under 37 C.F.R. Section 1.16 (National application filing, search, and examination fees)

Charge any Additional Fees required under 37 C.F.R. Section 1.17 (Patent application and reexamination processing fees)

Charge any Additional Fees required under 37 C.F.R. Section 1.19 (Document supply fees)

Charge any Additional Fees required under 37 C.F.R. Section 1.20 (Post Issuance fees)

Charge any Additional Fees required under 37 C.F.R. Section 1.21 (Miscellaneous fees and charges)

File Listing:

Document Number	Document Description	File Name	File Size(Bytes)/ Message Digest	Multi Part /.zip	Pages (if appl.)
1	Electronic Terminal Disclaimer-Filed	eTerminal-Disclaimer.pdf	33450 a5bab44ea054ea04a04a5edbb4fb60470121287b	no	2
Warnings:					
Information:					
2	Fee Worksheet (SB06)	fee-info.pdf	30276 1c2b7f4c2e62ae5e1dbaae9f5c94a098caf77eb7	no	2
Warnings:					
Information:					
		Total Files Size (in bytes):	63726		

This Acknowledgement Receipt evidences receipt on the noted date by the USPTO of the indicated documents, characterized by the applicant, and including page counts, where applicable. It serves as evidence of receipt similar to a Post Card, as described in MPEP 503.

<u>New Applications Under 35 U.S.C. 111</u>
If a new application is being filed and the application includes the necessary components for a filing date (see 37 CFR 1.53(b)-(d) and MPEP 506), a Filing Receipt (37 CFR 1.54) will be issued in due course and the date shown on this Acknowledgement Receipt will establish the filing date of the application.

<u>National Stage of an International Application under 35 U.S.C. 371</u>
If a timely submission to enter the national stage of an international application is compliant with the conditions of 35 U.S.C. 371 and other applicable requirements a Form PCT/DO/EO/903 indicating acceptance of the application as a national stage submission under 35 U.S.C. 371 will be issued in addition to the Filing Receipt, in due course.

<u>New International Application Filed with the USPTO as a Receiving Office</u>
If a new international application is being filed and the international application includes the necessary components for an international filing date (see PCT Article 11 and MPEP 1810), a Notification of the International Application Number and of the International Filing Date (Form PCT/RO/105) will be issued in due course, subject to prescriptions concerning national security, and the date shown on this Acknowledgement Receipt will establish the international filing date of the application.

UNITED STATES PATENT AND TRADEMARK OFFICE

UNITED STATES DEPARTMENT OF COMMERCE
United States Patent and Trademark Office
Address: COMMISSIONER FOR PATENTS
P.O. Box 1450
Alexandria, Virginia 22313-1450
www.uspto.gov

APPLICATION NUMBER	FILING OR 371(C) DATE	FIRST NAMED APPLICANT	ATTY. DOCKET NO./TITLE
14/614,543	02/05/2015	Madhukar Reddy	28427US04

CONFIRMATION NO. 5785

PUBLICATION NOTICE

23446
MCANDREWS HELD & MALLOY, LTD
500 WEST MADISON STREET
SUITE 3400
CHICAGO, IL 60661

OC000000075549784

Title:WIDEBAND TUNER ARCHITECTURE

Publication No.US-2015-0156535-A1
Publication Date:06/04/2015

NOTICE OF PUBLICATION OF APPLICATION

The above-identified application will be electronically published as a patent application publication pursuant to 37 CFR 1.211, et seq. The patent application publication number and publication date are set forth above.

The publication may be accessed through the USPTO's publically available Searchable Databases via the Internet at www.uspto.gov. The direct link to access the publication is currently http://www.uspto.gov/patft/.

The publication process established by the Office does not provide for mailing a copy of the publication to applicant. A copy of the publication may be obtained from the Office upon payment of the appropriate fee set forth in 37 CFR 1.19(a)(1). Orders for copies of patent application publications are handled by the USPTO's Office of Public Records. The Office of Public Records can be reached by telephone at (703) 308-9726 or (800) 972-6382, by facsimile at (703) 305-8759, by mail addressed to the United States Patent and Trademark Office, Office of Public Records, Alexandria, VA 22313-1450 or via the Internet.

In addition, information on the status of the application, including the mailing date of Office actions and the dates of receipt of correspondence filed in the Office, may also be accessed via the Internet through the Patent Electronic Business Center at www.uspto.gov using the public side of the Patent Application Information and Retrieval (PAIR) system. The direct link to access this status information is currently http://pair.uspto.gov/. Prior to publication, such status information is confidential and may only be obtained by applicant using the private side of PAIR.

Further assistance in electronically accessing the publication, or about PAIR, is available by calling the Patent Electronic Business Center at 1-866-217-9197.

Office of Data Managment, Application Assistance Unit (571) 272-4000, or (571) 272-4200, or 1-888-786-0101

To: mhmpto@mcandrews-ip.com,,
From: PAIR_eOfficeAction@uspto.gov
Cc: PAIR_eOfficeAction@uspto.gov
Subject: Private PAIR Correspondence Notification for Customer Number 23446

Jun 05, 2015 05:39:05 AM

Dear PAIR Customer:

MCANDREWS HELD & MALLOY, LTD
500 WEST MADISON STREET
SUITE 3400
CHICAGO, IL 60661
UNITED STATES

The following USPTO patent application(s) associated with your Customer Number, 23446 , have new outgoing correspondence. This correspondence is now available for viewing in Private PAIR.

The official date of notification of the outgoing correspondence will be indicated on the form PTOL-90 accompanying the correspondence.

Disclaimer:
The list of documents shown below is provided as a courtesy and is not part of the official file wrapper. The content of the images shown in PAIR is the official record.

Application	Document	Mailroom Date	Attorney Docket No.
14614543	NTC.PUB	06/04/2015	28427US04

To view your correspondence online or update your email addresses, please visit us anytime at https://sportal.uspto.gov/secure/myportal/privatepair.

If you have any questions, please email the Electronic Business Center (EBC) at EBC@uspto.gov with 'e-Office Action' on the subject line or call 1-866-217-9197 during the following hours:

Monday - Friday 6:00 a.m. to 12:00 a.m.

Thank you for prompt attention to this notice,

UNITED STATES PATENT AND TRADEMARK OFFICE

PATENT APPLICATION INFORMATION RETRIEVAL SYSTEM

UNITED STATES PATENT AND TRADEMARK OFFICE

UNITED STATES DEPARTMENT OF COMMERCE
United States Patent and Trademark Office
Address: COMMISSIONER FOR PATENTS
P.O. Box 1450
Alexandria, Virginia 22313-1450
www.uspto.gov

NOTICE OF ALLOWANCE AND FEE(S) DUE

23446 7590 08/07/2015
MCANDREWS HELD & MALLOY, LTD
500 WEST MADISON STREET
SUITE 3400
CHICAGO, IL 60661

EXAMINER
JACKSON, BLANE J

ART UNIT	PAPER NUMBER
2649	

DATE MAILED: 08/07/2015

APPLICATION NO.	FILING DATE	FIRST NAMED INVENTOR	ATTORNEY DOCKET NO.	CONFIRMATION NO.
14/614,543	02/05/2015	Madhukar Reddy	28427US04	5785

TITLE OF INVENTION: WIDEBAND TUNER ARCHITECTURE

APPLN. TYPE	ENTITY STATUS	ISSUE FEE DUE	PUBLICATION FEE DUE	PREV. PAID ISSUE FEE	TOTAL FEE(S) DUE	DATE DUE
nonprovisional	SMALL	$480	$0	$0	$480	11/09/2015

THE APPLICATION IDENTIFIED ABOVE HAS BEEN EXAMINED AND IS ALLOWED FOR ISSUANCE AS A PATENT. PROSECUTION ON THE MERITS IS CLOSED. THIS NOTICE OF ALLOWANCE IS NOT A GRANT OF PATENT RIGHTS. THIS APPLICATION IS SUBJECT TO WITHDRAWAL FROM ISSUE AT THE INITIATIVE OF THE OFFICE OR UPON PETITION BY THE APPLICANT. SEE 37 CFR 1.313 AND MPEP 1308.

THE ISSUE FEE AND PUBLICATION FEE (IF REQUIRED) MUST BE PAID WITHIN THREE MONTHS FROM THE MAILING DATE OF THIS NOTICE OR THIS APPLICATION SHALL BE REGARDED AS ABANDONED. THIS STATUTORY PERIOD CANNOT BE EXTENDED. SEE 35 U.S.C. 151. THE ISSUE FEE DUE INDICATED ABOVE DOES NOT REFLECT A CREDIT FOR ANY PREVIOUSLY PAID ISSUE FEE IN THIS APPLICATION. IF AN ISSUE FEE HAS PREVIOUSLY BEEN PAID IN THIS APPLICATION (AS SHOWN ABOVE), THE RETURN OF PART B OF THIS FORM WILL BE CONSIDERED A REQUEST TO REAPPLY THE PREVIOUSLY PAID ISSUE FEE TOWARD THE ISSUE FEE NOW DUE.

HOW TO REPLY TO THIS NOTICE:

I. Review the ENTITY STATUS shown above. If the ENTITY STATUS is shown as SMALL or MICRO, verify whether entitlement to that entity status still applies.

If the ENTITY STATUS is the same as shown above, pay the TOTAL FEE(S) DUE shown above.

If the ENTITY STATUS is changed from that shown above, on PART B - FEE(S) TRANSMITTAL, complete section number 5 titled "Change in Entity Status (from status indicated above)".

For purposes of this notice, small entity fees are 1/2 the amount of undiscounted fees, and micro entity fees are 1/2 the amount of small entity fees.

II. PART B - FEE(S) TRANSMITTAL, or its equivalent, must be completed and returned to the United States Patent and Trademark Office (USPTO) with your ISSUE FEE and PUBLICATION FEE (if required). If you are charging the fee(s) to your deposit account, section "4b" of Part B - Fee(s) Transmittal should be completed and an extra copy of the form should be submitted. If an equivalent of Part B is filed, a request to reapply a previously paid issue fee must be clearly made, and delays in processing may occur due to the difficulty in recognizing the paper as an equivalent of Part B.

III. All communications regarding this application must give the application number. Please direct all communications prior to issuance to Mail Stop ISSUE FEE unless advised to the contrary.

IMPORTANT REMINDER: Utility patents issuing on applications filed on or after Dec. 12, 1980 may require payment of maintenance fees. It is patentee's responsibility to ensure timely payment of maintenance fees when due.

PART B - FEE(S) TRANSMITTAL

Complete and send this form, together with applicable fee(s), to: Mail **Mail Stop ISSUE FEE**
Commissioner for Patents
P.O. Box 1450
Alexandria, Virginia 22313-1450
or Fax (571)-273-2885

INSTRUCTIONS: This form should be used for transmitting the ISSUE FEE and PUBLICATION FEE (if required). Blocks 1 through 5 should be completed where appropriate. All further correspondence including the Patent, advance orders and notification of maintenance fees will be mailed to the current correspondence address as indicated unless corrected below or directed otherwise in Block 1, by (a) specifying a new correspondence address; and/or (b) indicating a separate "FEE ADDRESS" for maintenance fee notifications.

CURRENT CORRESPONDENCE ADDRESS (Note: Use Block 1 for any change of address)

23446 7590 08/07/2015
MCANDREWS HELD & MALLOY, LTD
500 WEST MADISON STREET
SUITE 3400
CHICAGO, IL 60661

Note: A certificate of mailing can only be used for domestic mailings of the Fee(s) Transmittal. This certificate cannot be used for any other accompanying papers. Each additional paper, such as an assignment or formal drawing, must have its own certificate of mailing or transmission.

Certificate of Mailing or Transmission
I hereby certify that this Fee(s) Transmittal is being deposited with the United States Postal Service with sufficient postage for first class mail in an envelope addressed to the Mail Stop ISSUE FEE address above, or being facsimile transmitted to the USPTO (571) 273-2885, on the date indicated below.

(Depositor's name)
(Signature)
(Date)

APPLICATION NO.	FILING DATE	FIRST NAMED INVENTOR	ATTORNEY DOCKET NO.	CONFIRMATION NO.
14/614,543	02/05/2015	Madhukar Reddy	28427US04	5785

TITLE OF INVENTION: WIDEBAND TUNER ARCHITECTURE

APPLN. TYPE	ENTITY STATUS	ISSUE FEE DUE	PUBLICATION FEE DUE	PREV. PAID ISSUE FEE	TOTAL FEE(S) DUE	DATE DUE
nonprovisional	SMALL	$480	$0	$0	$480	11/09/2015

EXAMINER	ART UNIT	CLASS-SUBCLASS
JACKSON, BLANE J	2649	348-731000

1. Change of correspondence address or indication of "Fee Address" (37 CFR 1.363).
- ❑ Change of correspondence address (or Change of Correspondence Address form PTO/SB/122) attached.
- ❑ "Fee Address" indication (or "Fee Address" Indication form PTO/SB/47; Rev 03-02 or more recent) attached. **Use of a Customer Number is required.**

2. For printing on the patent front page, list
(1) The names of up to 3 registered patent attorneys or agents OR, alternatively,
(2) The name of a single firm (having as a member a registered attorney or agent) and the names of up to 2 registered patent attorneys or agents. If no name is listed, no name will be printed.

1_____
2_____
3_____

3. ASSIGNEE NAME AND RESIDENCE DATA TO BE PRINTED ON THE PATENT (print or type)

PLEASE NOTE: Unless an assignee is identified below, no assignee data will appear on the patent. If an assignee is identified below, the document has been filed for recordation as set forth in 37 CFR 3.11. Completion of this form is NOT a substitute for filing an assignment.

(A) NAME OF ASSIGNEE (B) RESIDENCE: (CITY and STATE OR COUNTRY)

Please check the appropriate assignee category or categories (will not be printed on the patent) : ❑ Individual ❑ Corporation or other private group entity ❑ Government

4a. The following fee(s) are submitted:
- ❑ Issue Fee
- ❑ Publication Fee (No small entity discount permitted)
- ❑ Advance Order - # of Copies _____

4b. Payment of Fee(s): **(Please first reapply any previously paid issue fee shown above)**
- ❑ A check is enclosed.
- ❑ Payment by credit card. Form PTO-2038 is attached.
- ❑ The director is hereby authorized to charge the required fee(s), any deficiency, or credits any overpayment, to Deposit Account Number _____ (enclose an extra copy of this form).

5. **Change in Entity Status** (from status indicated above)
- ❑ Applicant certifying micro entity status. See 37 CFR 1.29 — NOTE: Absent a valid certification of Micro Entity Status (see forms PTO/SB/15A and 15B), issue fee payment in the micro entity amount will not be accepted at the risk of application abandonment.
- ❑ Applicant asserting small entity status. See 37 CFR 1.27 — NOTE: If the application was previously under micro entity status, checking this box will be taken to be a notification of loss of entitlement to micro entity status.
- ❑ Applicant changing to regular undiscounted fee status. — NOTE: Checking this box will be taken to be a notification of loss of entitlement to small or micro entity status, as applicable.

NOTE: This form must be signed in accordance with 37 CFR 1.31 and 1.33. See 37 CFR 1.4 for signature requirements and certifications.

Authorized Signature _____ Date _____

Typed or printed name _____ Registration No. _____

PTOL-85 Part B (10-13) Approved for use through 10/31/2013. OMB 0651-0033 U.S. Patent and Trademark Office; U.S. DEPARTMENT OF COMMERCE

UNITED STATES PATENT AND TRADEMARK OFFICE

UNITED STATES DEPARTMENT OF COMMERCE
United States Patent and Trademark Office
Address: COMMISSIONER FOR PATENTS
P.O. Box 1450
Alexandria, Virginia 22313-1450
www.uspto.gov

APPLICATION NO.	FILING DATE	FIRST NAMED INVENTOR	ATTORNEY DOCKET NO.	CONFIRMATION NO.
14/614,543	02/05/2015	Madhukar Reddy	28427US04	5785

23446 7590 08/07/2015
MCANDREWS HELD & MALLOY, LTD
500 WEST MADISON STREET
SUITE 3400
CHICAGO, IL 60661

EXAMINER
JACKSON, BLANE J

ART UNIT	PAPER NUMBER
2649	

DATE MAILED: 08/07/2015

Determination of Patent Term Adjustment under 35 U.S.C. 154 (b)
(Applications filed on or after May 29, 2000)

The Office has discontinued providing a Patent Term Adjustment (PTA) calculation with the Notice of Allowance.

Section 1(h)(2) of the AIA Technical Corrections Act amended 35 U.S.C. 154(b)(3)(B)(i) to eliminate the requirement that the Office provide a patent term adjustment determination with the notice of allowance. See Revisions to Patent Term Adjustment, 78 Fed. Reg. 19416, 19417 (Apr. 1, 2013). Therefore, the Office is no longer providing an initial patent term adjustment determination with the notice of allowance. The Office will continue to provide a patent term adjustment determination with the Issue Notification Letter that is mailed to applicant approximately three weeks prior to the issue date of the patent, and will include the patent term adjustment on the patent. Any request for reconsideration of the patent term adjustment determination (or reinstatement of patent term adjustment) should follow the process outlined in 37 CFR 1.705.

Any questions regarding the Patent Term Extension or Adjustment determination should be directed to the Office of Patent Legal Administration at (571)-272-7702. Questions relating to issue and publication fee payments should be directed to the Customer Service Center of the Office of Patent Publication at 1-(888)-786-0101 or (571)-272-4200.

OMB Clearance and PRA Burden Statement for PTOL-85 Part B

The Paperwork Reduction Act (PRA) of 1995 requires Federal agencies to obtain Office of Management and Budget approval before requesting most types of information from the public. When OMB approves an agency request to collect information from the public, OMB (i) provides a valid OMB Control Number and expiration date for the agency to display on the instrument that will be used to collect the information and (ii) requires the agency to inform the public about the OMB Control Number's legal significance in accordance with 5 CFR 1320.5(b).

The information collected by PTOL-85 Part B is required by 37 CFR 1.311. The information is required to obtain or retain a benefit by the public which is to file (and by the USPTO to process) an application. Confidentiality is governed by 35 U.S.C. 122 and 37 CFR 1.14. This collection is estimated to take 12 minutes to complete, including gathering, preparing, and submitting the completed application form to the USPTO. Time will vary depending upon the individual case. Any comments on the amount of time you require to complete this form and/or suggestions for reducing this burden, should be sent to the Chief Information Officer, U.S. Patent and Trademark Office, U.S. Department of Commerce, P.O. Box 1450, Alexandria, Virginia 22313-1450. DO NOT SEND FEES OR COMPLETED FORMS TO THIS ADDRESS. SEND TO: Commissioner for Patents, P.O. Box 1450, Alexandria, Virginia 22313-1450. Under the Paperwork Reduction Act of 1995, no persons are required to respond to a collection of information unless it displays a valid OMB control number.

Privacy Act Statement

The Privacy Act of 1974 (P.L. 93-579) requires that you be given certain information in connection with your submission of the attached form related to a patent application or patent. Accordingly, pursuant to the requirements of the Act, please be advised that: (1) the general authority for the collection of this information is 35 U.S.C. 2(b)(2); (2) furnishing of the information solicited is voluntary; and (3) the principal purpose for which the information is used by the U.S. Patent and Trademark Office is to process and/or examine your submission related to a patent application or patent. If you do not furnish the requested information, the U.S. Patent and Trademark Office may not be able to process and/or examine your submission, which may result in termination of proceedings or abandonment of the application or expiration of the patent.

The information provided by you in this form will be subject to the following routine uses:

1. The information on this form will be treated confidentially to the extent allowed under the Freedom of Information Act (5 U.S.C. 552) and the Privacy Act (5 U.S.C 552a). Records from this system of records may be disclosed to the Department of Justice to determine whether disclosure of these records is required by the Freedom of Information Act.
2. A record from this system of records may be disclosed, as a routine use, in the course of presenting evidence to a court, magistrate, or administrative tribunal, including disclosures to opposing counsel in the course of settlement negotiations.
3. A record in this system of records may be disclosed, as a routine use, to a Member of Congress submitting a request involving an individual, to whom the record pertains, when the individual has requested assistance from the Member with respect to the subject matter of the record.
4. A record in this system of records may be disclosed, as a routine use, to a contractor of the Agency having need for the information in order to perform a contract. Recipients of information shall be required to comply with the requirements of the Privacy Act of 1974, as amended, pursuant to 5 U.S.C. 552a(m).
5. A record related to an International Application filed under the Patent Cooperation Treaty in this system of records may be disclosed, as a routine use, to the International Bureau of the World Intellectual Property Organization, pursuant to the Patent Cooperation Treaty.
6. A record in this system of records may be disclosed, as a routine use, to another federal agency for purposes of National Security review (35 U.S.C. 181) and for review pursuant to the Atomic Energy Act (42 U.S.C. 218(c)).
7. A record from this system of records may be disclosed, as a routine use, to the Administrator, General Services, or his/her designee, during an inspection of records conducted by GSA as part of that agency's responsibility to recommend improvements in records management practices and programs, under authority of 44 U.S.C. 2904 and 2906. Such disclosure shall be made in accordance with the GSA regulations governing inspection of records for this purpose, and any other relevant (i.e., GSA or Commerce) directive. Such disclosure shall not be used to make determinations about individuals.
8. A record from this system of records may be disclosed, as a routine use, to the public after either publication of the application pursuant to 35 U.S.C. 122(b) or issuance of a patent pursuant to 35 U.S.C. 151. Further, a record may be disclosed, subject to the limitations of 37 CFR 1.14, as a routine use, to the public if the record was filed in an application which became abandoned or in which the proceedings were terminated and which application is referenced by either a published application, an application open to public inspection or an issued patent.
9. A record from this system of records may be disclosed, as a routine use, to a Federal, State, or local law enforcement agency, if the USPTO becomes aware of a violation or potential violation of law or regulation.

Notice of Allowability	Application No. 14/614,543	Applicant(s) REDDY ET AL.	
	Examiner BLANE J. JACKSON	Art Unit 2649	AIA (First Inventor to File) Status No

-- The MAILING DATE of this communication appears on the cover sheet with the correspondence address--

All claims being allowable, PROSECUTION ON THE MERITS IS (OR REMAINS) CLOSED in this application. If not included herewith (or previously mailed), a Notice of Allowance (PTOL-85) or other appropriate communication will be mailed in due course. **THIS NOTICE OF ALLOWABILITY IS NOT A GRANT OF PATENT RIGHTS.** This application is subject to withdrawal from issue at the initiative of the Office or upon petition by the applicant. See 37 CFR 1.313 and MPEP 1308.

1. ☒ This communication is responsive to *the TD filed 15 May 2015*.
   ☐ A declaration(s)/affidavit(s) under **37 CFR 1.130(b)** was/were filed on_____.
2. ☐ An election was made by the applicant in response to a restriction requirement set forth during the interview on _____; the restriction requirement and election have been incorporated into this action.
3. ☒ The allowed claim(s) is/are *1-20*. As a result of the allowed claim(s), you may be eligible to benefit from the **Patent Prosecution Highway** program at a participating intellectual property office for the corresponding application. For more information, please see http://www.uspto.gov/patents/init_events/pph/index.jsp or send an inquiry to PPHfeedback@uspto.gov .
4. ☐ Acknowledgment is made of a claim for foreign priority under 35 U.S.C. § 119(a)-(d) or (f).

   Certified copies:

   a) ☐ All b) ☐ Some *c) ☐ None of the:
   1. ☐ Certified copies of the priority documents have been received.
   2. ☐ Certified copies of the priority documents have been received in Application No. _____ .
   3. ☐ Copies of the certified copies of the priority documents have been received in this national stage application from the International Bureau (PCT Rule 17.2(a)).

   * Certified copies not received: _____.

Applicant has THREE MONTHS FROM THE "MAILING DATE" of this communication to file a reply complying with the requirements noted below. Failure to timely comply will result in ABANDONMENT of this application.
THIS THREE-MONTH PERIOD IS NOT EXTENDABLE.

5. ☐ CORRECTED DRAWINGS (as "replacement sheets") must be submitted.
   ☐ including changes required by the attached Examiner's Amendment / Comment or in the Office action of Paper No./Mail Date _____.

   Identifying indicia such as the application number (see 37 CFR 1.84(c)) should be written on the drawings in the front (not the back) of each sheet. Replacement sheet(s) should be labeled as such in the header according to 37 CFR 1.121(d).
6. ☐ DEPOSIT OF and/or INFORMATION about the deposit of BIOLOGICAL MATERIAL must be submitted. Note the attached Examiner's comment regarding REQUIREMENT FOR THE DEPOSIT OF BIOLOGICAL MATERIAL.

Attachment(s)

1. ☐ Notice of References Cited (PTO-892)
2. ☐ Information Disclosure Statements (PTO/SB/08), Paper No./Mail Date _____
3. ☐ Examiner's Comment Regarding Requirement for Deposit of Biological Material
4. ☐ Interview Summary (PTO-413), Paper No./Mail Date _____ .
5. ☐ Examiner's Amendment/Comment
6. ☒ Examiner's Statement of Reasons for Allowance
7. ☐ Other _____.

DETAILED ACTION

The present application is being examined under the pre-AIA first to invent provisions.

Terminal Disclaimer

The terminal disclaimer filed on 15 May 2015 disclaiming the terminal portion of any patent granted on this application which would extend beyond the expiration date of US 8,526,898 has been reviewed and is accepted. The terminal disclaimer has been recorded.

Allowable Subject Matter

Claims 1-20 are allowed. The following is a statement of reasons for the indication of allowable subject matter: the prior art made of record teach a wideband receiver system but do not also teach digital circuitry configured to select a plurality of desired television channels from the digitized plurality of frequencies and output said plurality of television channels to a demodulator as a digital datastream.

Conclusion

Any inquiry concerning this communication or earlier communications from the examiner should be directed to BLANE J. JACKSON whose telephone number is (571)272-7890. The examiner can normally be reached on Monday through Friday, 8:30 AM-5:30 PM, EST.

If attempts to reach the examiner by telephone are unsuccessful, the examiner's supervisor, Edward Urban can be reached on (571) 272-7899. The fax phone number for the organization where this application or proceeding is assigned is 571-273-8300.

Information regarding the status of an application may be obtained from the Patent Application Information Retrieval (PAIR) system. Status information for published applications may be obtained from either Private PAIR or Public PAIR. Status information for unpublished applications is available through Private PAIR only. For more information about the PAIR system, see http://pair-direct.uspto.gov. Should you have questions on access to the Private PAIR system, contact the Electronic Business Center (EBC) at 866-217-9197 (toll-free). If you would like assistance from a USPTO Customer Service Representative or access to the automated information system, call 800-786-9199 (IN USA OR CANADA) or 571-272-1000.

/BLANE J JACKSON/
Primary Examiner, Art Unit 2649

EAST Search History

EAST Search History (Prior Art)

Ref #	Hits	Search Query	DBs	Default Operator	Plurals	Time Stamp
L1	4	"8526898".pn.	US-PGPUB; USPAT; USOCR; FPRS; EPO; JPO; DERWENT; IBM_TDB	OR	ON	2015/07/30 10:23
L2	41	Reddy-Madhukar.in.	US-PGPUB; USPAT; USOCR; FPRS; EPO; JPO; DERWENT; IBM_TDB	OR	ON	2015/07/30 11:18

7/30/2015 11:20:12 AM

Issue Classification	Application/Control No.	Applicant(s)/Patent Under Reexamination
	14614543	REDDY ET AL.
	Examiner	**Art Unit**
	BLANE J JACKSON	2649

CPC						
Symbol					**Type**	**Version**
H04N		21	/	4263	F	2013-01-01
H04B		1	/	0014	I	2013-01-01
H04N		5	/	50	I	2013-01-01
H04N		21	/	4383	I	2013-01-01
H04N		21	/	454	I	2013-01-01
H04N		21	/	6193	I	2013-01-01
			/			
			/			
			/			
			/			
			/			
			/			
			/			
			/			
			/			

CPC Combination Sets								
Symbol					**Type**	**Set**	**Ranking**	**Version**
			/					
			/					

NONE (Assistant Examiner)	(Date)	**Total Claims Allowed:** 20	
/BLANE J JACKSON/ Primary Examiner.Art Unit 2649 (Primary Examiner)	07/30/15 (Date)	O.G. Print Claim(s) 1	O.G. Print Figure 4

U.S. Patent and Trademark Office

Part of Paper No. 20150730

Issue Classification	Application/Control No.	Applicant(s)/Patent Under Reexamination
	14614543	REDDY ET AL.
	Examiner	**Art Unit**
	BLANE J JACKSON	2649

US ORIGINAL CLASSIFICATION		INTERNATIONAL CLASSIFICATION	
CLASS	SUBCLASS	CLAIMED	NON-CLAIMED
455	207	H 0 4 B 1 / 16 (2006.01.01)	

CROSS REFERENCE(S)					
CLASS	SUBCLASS (ONE SUBCLASS PER BLOCK)				
455	214				

NONE (Assistant Examiner)	(Date)	**Total Claims Allowed:** 20	
/BLANE J JACKSON/ Primary Examiner.Art Unit 2649 (Primary Examiner)	07/30/15 (Date)	O.G. Print Claim(s) 1	O.G. Print Figure 4

U.S. Patent and Trademark Office

Part of Paper No. 20150730

Issue Classification	Application/Control No.	Applicant(s)/Patent Under Reexamination
	14614543	REDDY ET AL.
	Examiner	**Art Unit**
	BLANE J JACKSON	2649

☒ **Claims renumbered in the same order as presented by applicant** ☐ **CPA** ☐ **T.D.** ☐ **R.1.47**

Final	Original	Final	Original	Final	Original	Final	Original	Final	Original	Final	Original	Final	Original	Final	Original
1	1	17	17												
2	2	18	18												
3	3	19	19												
4	4	20	20												
5	5														
6	6														
7	7														
8	8														
9	9														
10	10														
11	11														
12	12														
13	13														
14	14														
15	15														
16	16														

NONE (Assistant Examiner)	(Date)	**Total Claims Allowed:** 20	
/BLANE J JACKSON/ Primary Examiner.Art Unit 2649 (Primary Examiner)	07/30/15 (Date)	O.G. Print Claim(s) 1	O.G. Print Figure 4

U.S. Patent and Trademark Office

Part of Paper No. 20150730

Search Notes	Application/Control No.	Applicant(s)/Patent Under Reexamination
	14614543	REDDY ET AL.
	Examiner	**Art Unit**
	BLANE J JACKSON	2649

CPC- SEARCHED

Symbol	Date	Examiner

CPC COMBINATION SETS - SEARCHED

Symbol	Date	Examiner
H04B 1/16	05/08/15	BJJ

US CLASSIFICATION SEARCHED

Class	Subclass	Date	Examiner
455	131, 140, 207, 214, 313, 315, 323, 324, 325, 334	05/08/15	BJJ

SEARCH NOTES

Search Notes	Date	Examiner
Review of IDS; review of prior art and similar application 14/617,973 to FAOM	05/08/15	BJJ
update search; review of TD to issue	07/30/15	BJJ

INTERFERENCE SEARCH

US Class/ CPC Symbol	US Subclass / CPC Group	Date	Examiner
	no interference listed class/ subclass or symbol/ group	07/30/15	BJJ

To: mhmpto@mcandrews-ip.com,,
From: PAIR_eOfficeAction@uspto.gov
Cc: PAIR_eOfficeAction@uspto.gov
Subject: Private PAIR Correspondence Notification for Customer Number 23446

Aug 07, 2015 05:32:47 AM

Dear PAIR Customer:

MCANDREWS HELD & MALLOY, LTD
500 WEST MADISON STREET
SUITE 3400
CHICAGO, IL 60661
UNITED STATES

The following USPTO patent application(s) associated with your Customer Number, 23446 , have new outgoing correspondence. This correspondence is now available for viewing in Private PAIR.

The official date of notification of the outgoing correspondence will be indicated on the form PTOL-90 accompanying the correspondence.

Disclaimer:
The list of documents shown below is provided as a courtesy and is not part of the official file wrapper. The content of the images shown in PAIR is the official record.

Application	Document	Mailroom Date	Attorney Docket No.
14614543	NOA	08/07/2015	28427US04

To view your correspondence online or update your email addresses, please visit us anytime at https://sportal.uspto.gov/secure/myportal/privatepair.

If you have any questions, please email the Electronic Business Center (EBC) at EBC@uspto.gov with 'e-Office Action' on the subject line or call 1-866-217-9197 during the following hours:

Monday - Friday 6:00 a.m. to 12:00 a.m.

Thank you for prompt attention to this notice,

UNITED STATES PATENT AND TRADEMARK OFFICE

PATENT APPLICATION INFORMATION RETRIEVAL SYSTEM

PTO/SB/30EFS (07-09)
Approved for use through 07/31/2012. OMB 0651-0031
U.S. Patent and Trademark Office; U.S. DEPARTMENT OF COMMERCE
Under the Paperwork Reduction Act of 1995, no persons are required to respond to a collection of information unless it contains a valid OMB control number.

REQUEST FOR CONTINUED EXAMINATION(RCE)TRANSMITTAL
(Submitted Only via EFS-Web)

Application Number	14614543	Filing Date	2015-02-05	Docket Number (if applicable)	28427US04	Art Unit	2649
First Named Inventor	Madhukar Reddy			Examiner Name	JACKSON, Blane J.		

This is a Request for Continued Examination (RCE) under 37 CFR 1.114 of the above-identified application.
Request for Continued Examination (RCE) practice under 37 CFR 1.114 does not apply to any utility or plant application filed prior to June 8, 1995, or to any design application. The Instruction Sheet for this form is located at WWW.USPTO.GOV

SUBMISSION REQUIRED UNDER 37 CFR 1.114

Note: If the RCE is proper, any previously filed unentered amendments and amendments enclosed with the RCE will be entered in the order in which they were filed unless applicant instructs otherwise. If applicant does not wish to have any previously filed unentered amendment(s) entered, applicant must request non-entry of such amendment(s).

☐ Previously submitted. If a final Office action is outstanding, any amendments filed after the final Office action may be considered as a submission even if this box is not checked.

- ☐ Consider the arguments in the Appeal Brief or Reply Brief previously filed on _____
- ☐ Other _____

☒ Enclosed

- ☐ Amendment/Reply
- ☒ Information Disclosure Statement (IDS)
- ☐ Affidavit(s)/ Declaration(s)
- ☐ Other _____

MISCELLANEOUS

☐ Suspension of action on the above-identified application is requested under 37 CFR 1.103(c) for a period of months _____
(Period of suspension shall not exceed 3 months; Fee under 37 CFR 1.17(i) required)

☐ Other _____

FEES

The RCE fee under 37 CFR 1.17(e) is required by 37 CFR 1.114 when the RCE is filed.
☒ The Director is hereby authorized to charge any underpayment of fees, or credit any overpayments, to Deposit Account No 130017

SIGNATURE OF APPLICANT, ATTORNEY, OR AGENT REQUIRED

☒ Patent Practitioner Signature
☐ Applicant Signature

PTO/SB/30EFS (07-09)
Approved for use through 07/31/2012. OMB 0651-0031
U.S. Patent and Trademark Office; U.S. DEPARTMENT OF COMMERCE
Under the Paperwork Reduction Act of 1995, no persons are required to respond to a collection of information unless it contains a valid OMB control number.

Signature of Registered U.S. Patent Practitioner			
Signature	/Chad M. Gilles/	Date (YYYY-MM-DD)	2015-09-11
Name	Chad M. Gilles	Registration Number	60590

This collection of information is required by 37 CFR 1.114. The information is required to obtain or retain a benefit by the public which is to file (and by the USPTO to process) an application. Confidentiality is governed by 35 U.S.C. 122 and 37 CFR 1.11 and 1.14. This collection is estimated to take 12 minutes to complete, including gathering, preparing, and submitting the completed application form to the USPTO. Time will vary depending upon the individual case. Any comments on the amount of time you require to complete this form and/or suggestions for reducing this burden, should be sent to the Chief Information Officer, U.S. Patent and Trademark Office, U.S. Department of Commerce, P.O. Box 1450, Alexandria, VA 22313-1450.

If you need assistance in completing the form, call 1-800-PTO-9199 and select option 2.

Privacy Act Statement

The Privacy Act of 1974 (P.L. 93-579) requires that you be given certain information in connection with your submission of the attached form related to a patent application or patent. Accordingly, pursuant to the requirements of the Act, please be advised that: (1) the general authority for the collection of this information is 35 U.S.C. 2(b)(2); (2) furnishing of the information solicited is voluntary; and (3) the principal purpose for which the information is used by the U.S. Patent and Trademark Office is to process and/or examine your submission related to a patent application or patent. If you do not furnish the requested information, the U.S. Patent and Trademark Office may not be able to process and/or examine your submission, which may result in termination of proceedings or abandonment of the application or expiration of the patent.

The information provided by you in this form will be subject to the following routine uses:

1. The information on this form will be treated confidentially to the extent allowed under the Freedom of Information Act (5 U.S.C. 552) and the Privacy Act (5 U.S.C. 552a). Records from this system of records may be disclosed to the Department of Justice to determine whether the Freedom of Information Act requires disclosure of these records.

2. A record from this system of records may be disclosed, as a routine use, in the course of presenting evidence to a court, magistrate, or administrative tribunal, including disclosures to opposing counsel in the course of settlement negotiations.

3. A record in this system of records may be disclosed, as a routine use, to a Member of Congress submitting a request involving an individual, to whom the record pertains, when the individual has requested assistance from the Member with respect to the subject matter of the record.

4. A record in this system of records may be disclosed, as a routine use, to a contractor of the Agency having need for the information in order to perform a contract. Recipients of information shall be required to comply with the requirements of the Privacy Act of 1974, as amended, pursuant to 5 U.S.C. 552a(m).

5. A record related to an International Application filed under the Patent Cooperation Treaty in this system of records may be disclosed, as a routine use, to the International Bureau of the World Intellectual Property Organization, pursuant to the Patent Cooperation Treaty.

6. A record in this system of records may be disclosed, as a routine use, to another federal agency for purposes of National Security review (35 U.S.C. 181) and for review pursuant to the Atomic Energy Act (42 U.S.C. 218(c)).

7. A record from this system of records may be disclosed, as a routine use, to the Administrator, General Services, or his/her designee, during an inspection of records conducted by GSA as part of that agency's responsibility to recommend improvements in records management practices and programs, under authority of 44 U.S.C. 2904 and 2906. Such disclosure shall be made in accordance with the GSA regulations governing inspection of records for this purpose, and any other relevant (i.e., GSA or Commerce) directive. Such disclosure shall not be used to make determinations about individuals.

8. A record from this system of records may be disclosed, as a routine use, to the public after either publication of the application pursuant to 35 U.S.C. 122(b) or issuance of a patent pursuant to 35 U.S.C. 151. Further, a record may be disclosed, subject to the limitations of 37 CFR 1.14, as a routine use, to the public if the record was filed in an application which became abandoned or in which the proceedings were terminated and which application is referenced by either a published application, an application open to public inspections or an issued patent.

9. A record from this system of records may be disclosed, as a routine use, to a Federal, State, or local law enforcement agency, if the USPTO becomes aware of a violation or potential violation of law or regulation.

PTO/SB/08a (01-10)
Approved for use through 07/31/2012. OMB 0651-0031
U.S. Patent and Trademark Office; U.S. DEPARTMENT OF COMMERCE
Under the Paperwork Reduction Act of 1995, no persons are required to respond to a collection of information unless it contains a valid OMB control number.

INFORMATION DISCLOSURE STATEMENT BY APPLICANT (**Not for submission under 37 CFR 1.99)**	Application Number	14614543
	Filing Date	2015-02-05
	First Named Inventor	Madhukar Reddy
	Art Unit	2649
	Examiner Name	JACKSON, Blane J.
	Attorney Docket Number	28427US04

U.S.PATENTS						Remove
Examiner Initial*	Cite No	Patent Number	Kind Code[1]	Issue Date	Name of Patentee or Applicant of cited Document	Pages,Columns,Lines where Relevant Passages or Relevant Figures Appear
	1	6906498		2005-06-14	Breuch et al.	
	2	6992855		2006-01-31	Ehrlich	
	3	7095454		2006-08-22	Waight et al.	
	4	7167694		2007-01-23	Khoini-Poorfard et al.	
	5	7362178		2008-04-22	Montemayor et al.	
	6	7373125		2008-05-13	Godambe et al.	
	7	7421259		2008-09-02	Gomez et al.	
	8	8285240		2012-10-09	Seendripu et al.	

INFORMATION DISCLOSURE STATEMENT BY APPLICANT (Not for submission under 37 CFR 1.99)	Application Number	14614543
	Filing Date	2015-02-05
	First Named Inventor	Madhukar Reddy
	Art Unit	2649
	Examiner Name	JACKSON, Blane J.
	Attorney Docket Number	28427US04

	9	8374568		2013-02-12	Seendripu et al.	
	10	8374569		2013-02-12	Seendripu et al.	
	11	8374570		2013-02-12	Seendripu et al.	
	12	8526898		2013-09-03	Reddy et al.	
	13	8577319		2013-11-05	Ling et al.	
	14	8666350		2014-03-04	Vauhkonen	
	15	8909187		2014-12-09	Seendripu et al.	
	16	9059672		2015-06-16	Ling et al.	

If you wish to add additional U.S. Patent citation information please click the Add button. Add

U.S.PATENT APPLICATION PUBLICATIONS Remove

Examiner Initial*	Cite No	Publication Number	Kind Code[1]	Publication Date	Name of Patentee or Applicant of cited Document	Pages,Columns,Lines where Relevant Passages or Relevant Figures Appear
	1	20050040909	A1	2005-02-24	Waight et al.	

INFORMATION DISCLOSURE STATEMENT BY APPLICANT (Not for submission under 37 CFR 1.99)	Application Number	14614543
	Filing Date	2015-02-05
	First Named Inventor	Madhukar Reddy
	Art Unit	2649
	Examiner Name	JACKSON, Blane J.
	Attorney Docket Number	28427US04

	2	20070042742	A1	2007-02-22	Kim et al.		

If you wish to add additional U.S. Published Application citation information please click the Add button. Add

FOREIGN PATENT DOCUMENTS Remove

Examiner Initial*	Cite No	Foreign Document Number[3]	Country Code[2] ¡	Kind Code[4]	Publication Date	Name of Patentee or Applicant of cited Document	Pages,Columns,Lines where Relevant Passages or Relevant Figures Appear	T[5]
	1							☐

If you wish to add additional Foreign Patent Document citation information please click the Add button Add

NON-PATENT LITERATURE DOCUMENTS Remove

Examiner Initials*	Cite No	Include name of the author (in CAPITAL LETTERS), title of the article (when appropriate), title of the item (book, magazine, journal, serial, symposium, catalog, etc), date, pages(s), volume-issue number(s), publisher, city and/or country where published.	T[5]
	1	JEFFREY A. WELDON, et al. "A 1.75-GHz Highly Integrated Narrow-Band CMOS Transmitter With Harmonic-Rejection Mixers, IEEE Journal of Solid-State Circuits, December 2001, pages: 2003-2015, Vol. 36, No. 12, Seattle, Washington.	☐

If you wish to add additional non-patent literature document citation information please click the Add button Add

EXAMINER SIGNATURE

Examiner Signature		Date Considered	

*EXAMINER: Initial if reference considered, whether or not citation is in conformance with MPEP 609. Draw line through a citation if not in conformance and not considered. Include copy of this form with next communication to applicant.

[1] See Kind Codes of USPTO Patent Documents at www.USPTO.GOV or MPEP 901.04. [2] Enter office that issued the document, by the two-letter code (WIPO Standard ST.3). [3] For Japanese patent documents, the indication of the year of the reign of the Emperor must precede the serial number of the patent document. [4] Kind of document by the appropriate symbols as indicated on the document under WIPO Standard ST.16 if possible. [5] Applicant is to place a check mark here if English language translation is attached.

INFORMATION DISCLOSURE STATEMENT BY APPLICANT (Not for submission under 37 CFR 1.99)	Application Number	14614543
	Filing Date	2015-02-05
	First Named Inventor	Madhukar Reddy
	Art Unit	2649
	Examiner Name	JACKSON, Blane J.
	Attorney Docket Number	28427US04

CERTIFICATION STATEMENT

Please see 37 CFR 1.97 and 1.98 to make the appropriate selection(s):

☐ That each item of information contained in the information disclosure statement was first cited in any communication from a foreign patent office in a counterpart foreign application not more than three months prior to the filing of the information disclosure statement. See 37 CFR 1.97(e)(1).

OR

☐ That no item of information contained in the information disclosure statement was cited in a communication from a foreign patent office in a counterpart foreign application, and, to the knowledge of the person signing the certification after making reasonable inquiry, no item of information contained in the information disclosure statement was known to any individual designated in 37 CFR 1.56(c) more than three months prior to the filing of the information disclosure statement. See 37 CFR 1.97(e)(2).

☐ See attached certification statement.

☐ The fee set forth in 37 CFR 1.17 (p) has been submitted herewith.

☒ A certification statement is not submitted herewith.

SIGNATURE

A signature of the applicant or representative is required in accordance with CFR 1.33, 10.18. Please see CFR 1.4(d) for the form of the signature.

Signature	/Chad M. Gilles/	Date (YYYY-MM-DD)	2015-09-11
Name/Print	Chad M. Gilles	Registration Number	60590

This collection of information is required by 37 CFR 1.97 and 1.98. The information is required to obtain or retain a benefit by the public which is to file (and by the USPTO to process) an application. Confidentiality is governed by 35 U.S.C. 122 and 37 CFR 1.14. This collection is estimated to take 1 hour to complete, including gathering, preparing and submitting the completed application form to the USPTO. Time will vary depending upon the individual case. Any comments on the amount of time you require to complete this form and/or suggestions for reducing this burden, should be sent to the Chief Information Officer, U.S. Patent and Trademark Office, U.S. Department of Commerce, P.O. Box 1450, Alexandria, VA 22313-1450. DO NOT SEND FEES OR COMPLETED FORMS TO THIS ADDRESS. **SEND TO: Commissioner for Patents, P.O. Box 1450, Alexandria, VA 22313-1450.**

Privacy Act Statement

The Privacy Act of 1974 (P.L. 93-579) requires that you be given certain information in connection with your submission of the attached form related to a patent application or patent. Accordingly, pursuant to the requirements of the Act, please be advised that: (1) the general authority for the collection of this information is 35 U.S.C. 2(b)(2); (2) furnishing of the information solicited is voluntary; and (3) the principal purpose for which the information is used by the U.S. Patent and Trademark Office is to process and/or examine your submission related to a patent application or patent. If you do not furnish the requested information, the U.S. Patent and Trademark Office may not be able to process and/or examine your submission, which may result in termination of proceedings or abandonment of the application or expiration of the patent.

The information provided by you in this form will be subject to the following routine uses:

1. The information on this form will be treated confidentially to the extent allowed under the Freedom of Information Act (5 U.S.C. 552) and the Privacy Act (5 U.S.C. 552a). Records from this system of records may be disclosed to the Department of Justice to determine whether the Freedom of Information Act requires disclosure of these record s.

2. A record from this system of records may be disclosed, as a routine use, in the course of presenting evidence to a court, magistrate, or administrative tribunal, including disclosures to opposing counsel in the course of settlement negotiations.

3. A record in this system of records may be disclosed, as a routine use, to a Member of Congress submitting a request involving an individual, to whom the record pertains, when the individual has requested assistance from the Member with respect to the subject matter of the record.

4. A record in this system of records may be disclosed, as a routine use, to a contractor of the Agency having need for the information in order to perform a contract. Recipients of information shall be required to comply with the requirements of the Privacy Act of 1974, as amended, pursuant to 5 U.S.C. 552a(m).

5. A record related to an International Application filed under the Patent Cooperation Treaty in this system of records may be disclosed, as a routine use, to the International Bureau of the World Intellectual Property Organization, pursuant to the Patent Cooperation Treaty.

6. A record in this system of records may be disclosed, as a routine use, to another federal agency for purposes of National Security review (35 U.S.C. 181) and for review pursuant to the Atomic Energy Act (42 U.S.C. 218(c)).

7. A record from this system of records may be disclosed, as a routine use, to the Administrator, General Services, or his/her designee, during an inspection of records conducted by GSA as part of that agency's responsibility to recommend improvements in records management practices and programs, under authority of 44 U.S.C. 2904 and 2906. Such disclosure shall be made in accordance with the GSA regulations governing inspection of records for this purpose, and any other relevant (i.e., GSA or Commerce) directive. Such disclosure shall not be used to make determinations about individuals.

8. A record from this system of records may be disclosed, as a routine use, to the public after either publication of the application pursuant to 35 U.S.C. 122(b) or issuance of a patent pursuant to 35 U.S.C. 151. Further, a record may be disclosed, subject to the limitations of 37 CFR 1.14, as a routine use, to the public if the record was filed in an application which became abandoned or in which the proceedings were terminated and which application is referenced by either a published application, an application open to public inspections or an issued patent.

9. A record from this system of records may be disclosed, as a routine use, to a Federal, State, or local law enforcement agency, if the USPTO becomes aware of a violation or potential violation of law or regulation.

ResearchGate

See discussions, stats, and author profiles for this publication at: http://www.researchgate.net/publication/2976886

A 1.75-GHz highly integrated narrow-band CMOS transmitter with harmonic-rejection mixers

ARTICLE in IEEE JOURNAL OF SOLID-STATE CIRCUITS · JANUARY 2002

Impact Factor: 3.11 · DOI: 10.1109/4.972151 · Source: IEEE Xplore

CITATIONS
153

DOWNLOADS
167

VIEWS
227

10 AUTHORS, INCLUDING:

Jacques Rudell
University of Washington Seattle
53 PUBLICATIONS **789** CITATIONS

SEE PROFILE

Sebastien Dedieu
20 PUBLICATIONS **210** CITATIONS

SEE PROFILE

Available from: Sebastien Dedieu
Retrieved on: 10 September 2015

A 1.75-GHz Highly Integrated Narrow-Band CMOS Transmitter With Harmonic-Rejection Mixers

Jeffrey A. Weldon, R. Sekhar Narayanaswami, Jacques C. Rudell, *Member, IEEE*, Li Lin, Masanori Otsuka, Sebastien Dedieu, Luns Tee, *Student Member, IEEE*, King-Chun Tsai, *Student Member, IEEE*, Cheol-Woong Lee, and Paul R. Gray, *Fellow, IEEE*

***Abstract*—A highly integrated 1.75-GHz 0.35-μm CMOS transmitter is described. The I/Q modulator-based transmitter facilitates integration through the use of a unique mixer, termed a harmonic-rejection mixer, and a wide loop bandwidth phase-locked loop (PLL) for the RF synthesizer. The harmonic-rejection mixers are used to eliminate the need for a discrete IF filter and the use of a wide loop bandwidth PLL allowed for the complete integration of the synthesizers using low-Q components while achieving low phase noise. The entire transmit signal path from the digital-to-analog converters to the power amplifier, including two fully integrated frequency synthesizers, is integrated into a single-chip solution. The transmitter was tested with a testing buffer before the power amplifier (PA) and achieved less than 1.3° rms phase error when modulating a DCS-1800 GMSK signal. The prototype consumed 151 mA from a 3-V supply. A class-C PA, capable of driving 25 dBm off-chip, was included and the output was compared to the testing buffer with little change in the transmitter performance.**

***Index Terms*—Class-C power amplifier, CMOS RF, digital-to-analog converter, frequency synthesizer, harmonic-rejection mixer, harmonic-rejection transmitter, image-rejection mixer, low-pass filter, phase-locked loop, power amplifier, quadrature generation, radio architectures, radio transmitter, wireless communications.**

I. Introduction

THE DEMAND for wireless connectivity supporting both voice and data has dramatically increased in recent years. Advancements in wireless technology have largely been driven by the desire for lower cost solutions. One method of achieving this price reduction is through increased levels of integration in both the transmitter and the receiver. In addition to reducing the number of ICs needed, eliminating the need for costly discrete components can also lower the overall cost. Consequently, methods of integration have received considerable attention over the last few years [1], with the goal of complete integration of both the digital and analog circuits onto a single chip. CMOS is amenable to high integration due to the fact that the vast majority of digital integrated circuits as well as many analog integrated circuits [2] are implemented in CMOS technologies. However, maintaining high performance in a wireless system, with an integrated CMOS solution, requires advances at both the architectural and circuit level because many current implementations are not amenable to integration in CMOS.

Recently, significant effort has been directed toward the implementation of integrated CMOS receivers [3], [4]. The focus of this work is to demonstrate techniques that would allow for a highly integrated high-performance CMOS transmitter and eliminate the need for costly discrete components. The challenge was to maintain the high performance needed by cellular communications systems while using low-Q on-chip components inherent to standard CMOS. A prototype was fabricated using a 0.35-μm double-poly five-layer metal CMOS technology. The transmitter operated at 1.75 GHz and was designed for a narrow-band cellular standard, DCS-1800, an up-banded version of GSM. Although the prototype was only tested with one standard, the architecture was chosen to facilitate multistandard operation. The transmitter integrated the entire signal path from the digital-to-analog converters (DACs) to the power amplifier (PA) including two frequency synthesizers. The full integration of the transmitter was facilitated by a number of techniques including the harmonic-rejection mixer (HRM) and a wide-loop-bandwidth phase-locked loop (PLL).

Section II discusses relevant transmitter architectures and their potential for integration in CMOS and multistandard operation. Section III focuses on the harmonic-rejection transmitter in more detail while addressing a few of the key concepts and circuit blocks. Section IV examines the CMOS prototype transmitter used to demonstrate the previously discussed concepts, and Section V presents the measured results from this transmitter. Finally, some conclusions are made in Section VI.

II. Transmitter Architectures

Transmitter implementations to date have used a variety of architectures, each of which exhibits features making them well suited for implementing a specific standard. However, if the goal is multistandard operation, a transmitter architecture with high flexibility is desired. Furthermore, high performance is required if a difficult standard is among the targeted applications. In particular, RF systems with large cell sizes, such as cellular communication systems, generally require higher performance than short-range systems such as Bluetooth. The issue is further complicated by the fact that CMOS integration using low-Q components limits the performance of many circuit techniques. As

Manuscript received May 5, 2001; revised July 27, 2001. This work was supported by the National Science Foundation under Grant CCR-9732550, the Defense Advanced Research Project Agency under Grant F30602-97-2-0346, and the California MICRO Program.

J. A. Weldon, R. S. Narayanaswami, J. C. Rudell, L. Tee, K.-C. Tsai, C.-W. Lee, and P. R. Gray are with the Berkeley Wireless Research Center, University of California, Berkeley, CA 94704 USA (e-mail: weldon@eecs.berkeley.edu).

L. Lin is with Broadcom Corporation, San Jose, CA 95110 USA.

M. Otsuka is with Hitachi, Ltd., Tokyo, Japan.

S. Dedieu is with STMicroelectronics, Grenoble, France.

Publisher Item Identifier S 0018-9200(01)09327-1.

0018–9200/01$10.00 © 2001 IEEE

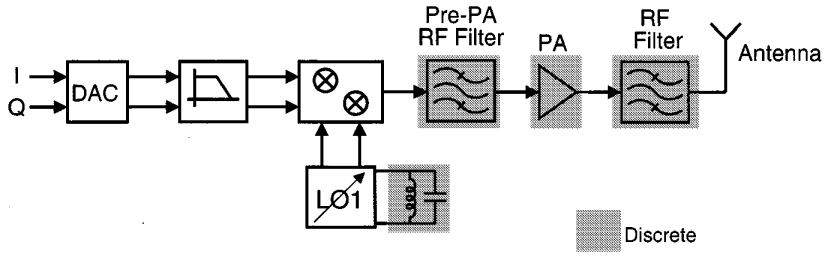

Fig. 1. Direct upconversion transmitter block diagram.

a result, new architectures and circuit techniques must be investigated if the goal is high-performance multistandard operation using CMOS and its inherently low-Q devices.

The vast majority of transmitters fall into two classes: I/Q modulator-based transmitters and voltage-controlled oscillator (VCO)-based transmitters. Although VCO-based transmitters have shown promise with respect to the elimination of discrete components [5], [6], they are fundamentally limited to constant-envelope modulation schemes. In contrast, I/Q modulator-based transmitters can operate with both constant and nonconstant envelope modulation, making them well suited for multistandard operation. To begin the discussion of I/Q modulator-based transmitters, a homodyne or direct upconversion transmitter is evaluated, followed by a discussion of the traditional heterodyne or indirect upconversion transmitter. Finally, a modified heterodyne transmitter is presented called the harmonic-rejection transmitter.

A. Direct-Upconversion Transmitter (Homodyne)

The direct-upconversion transmitter, shown in Fig. 1, is attractive because of the simplicity of the signal path. The in-phase (I) and quadrature (Q) baseband digital signals pass through a DAC and a baseband filter before the signal is upconverted to RF in a single step. The I and Q signals are then combined before passing through a pre-PA RF filter, a PA, and a second RF filter. Channel tuning is typically performed with a single RF channel-select frequency synthesizer. The shaded components in Fig. 1 would likely remain discrete if CMOS integration with low-Q components was attempted for a number of reasons. In particular, integrating a low-phase noise RF channel-select frequency synthesizer using low-Q components would be particularly difficult for narrow-band cellular standards such as GSM. This would lead to the use of a discrete VCO tank circuit to meet the required phase-noise performance with reasonable power consumption. Aside from the tank circuit, a discrete pre-PA RF filter is needed for two reasons. First, the filter reduces potential third-order intermodulation in the PA that could degrade modulation accuracy. This can be seen in Fig. 2 when the third harmonic of the desired signal intermodulates with the desired signal to produce an unwanted third harmonic of the baseband signal. The pre-PA RF filter is also needed to attenuate transmitted noise that in turn reduces the filtering requirement after the PA. This allows the use of a single filter after the PA with potentially lower loss than if a pre-PA filter was not used. Aside from the need for discrete components, the direct upconversion transmitter suffers from some well-known problems. First, the

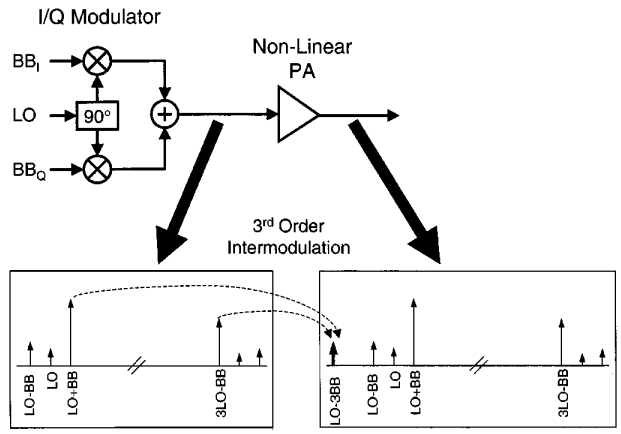

Fig. 2. Third-order intermodulation in PA.

local oscillator (LO) feedthrough is relatively large because of the high frequency used in the I/Q modulator. The second, and potentially more severe, problem is LO pulling which occurs because the transmitted signal is running at the same frequency as the LO. This condition would only get worse with PA integration. One method to reduce LO pulling is offset mixing [7], [8], but this technique does not address any of the other integration issues. To further improve transmitter performance, an indirect upconversion transmitter is often used.

B. Indirect Upconversion Transmitter (Heterodyne)

The indirect upconversion transmitter, shown in Fig. 3, can be viewed as the transmitter version of the superheterodyne receiver. Like the homodyne transmitter, an I/Q modulator is used; however, now the baseband signal is frequency translated to a fixed IF. The signal is then typically filtered to remove unwanted IF harmonics. The IF signal is then upconverted to RF before it passes through a pre-PA RF filter, the PA, and a final RF filter. Like the direct upconversion transmitter, channel tuning is performed with a single RF channel-select frequency synthesizer, and again, the shaded components would likely remain discrete if CMOS integration with low-Q components was attempted. In addition, yet another discrete component, the IF filter, has been added. Furthermore, little has been done to ease the requirements of the RF VCO tank circuit or the pre-PA RF filter. However, this transmitter does have a number of performance advantages. First, LO feedthrough is reduced because of the lower frequency used in the I/Q modulator, and second, LO pulling is reduced because neither oscillator is operating at the transmitted frequency. To further improve performance a modi-

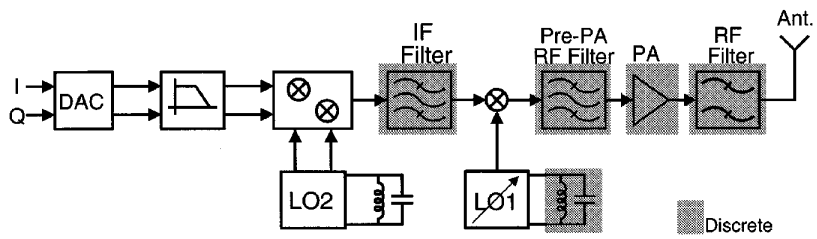

Fig. 3. Indirect upconversion transmitter block diagram.

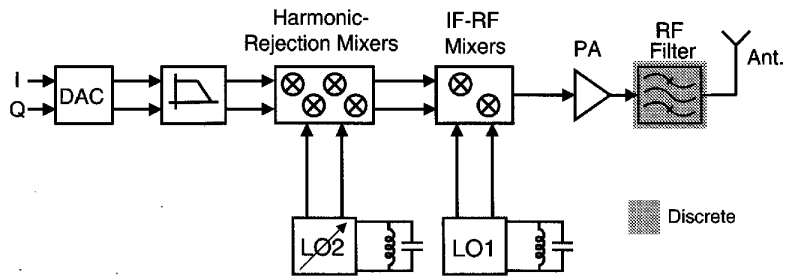

Fig. 4. Harmonic-rejection transmitter block diagram.

fied indirect-upconversion transmitter was used, called the harmonic-rejection transmitter.

C. Harmonic-Rejection Transmitter

The two-step transmitter shown in Fig. 4 is called the harmonic-rejection transmitter (HRT) because of the unique mixers used in the baseband to IF upconversion. This transmitter maintains the performance advantages of the traditional indirect upconversion transmitter in that both LO pulling and LO feedthrough are reduced. In addition, for reasons shown later, the dependency on discrete components has been reduced. For a given performance metric, removal of the IF filter and pre-PA filter may now be possible, as well as complete integration of the RF VCO tank circuit. Integration of the tank circuit is achieved by switching the roles of the synthesizers as compared to a conventional heterodyne transmitter. Channel tuning is now performed with the IF synthesizer while the RF synthesizer is fixed in frequency. By reversing the roles of the two synthesizers, the total phase noise of both synthesizers can be reduced when using low-Q on-chip components for the VCO tank circuitry.

The IF filtering requirement is relaxed by the use of HRMs for the baseband to IF upconversion. As previously mentioned, conventional switching mixers introduce relatively large harmonics at multiples of the IF frequency that require the use of a high-Q filter not amenable to CMOS integration. In contrast, the HRM not only frequency translates the baseband signal to IF but also avoids the need for a discrete filter by attenuating the third and fifth IF harmonics. This attenuation is achieved by effectively multiplying the baseband signal by a 3-bit, amplitude-quantized sinusoid. The details of the HRM will be discussed in more detail in Section III.

In addition to the relaxation of the IF filtering requirement, the requirements on the pre-PA RF filter have also been relaxed. The pre-PA filter is needed to reduce potential third-order intermodulation and to attenuate transmitted noise and spurs. Since the transmitted noise is typically dominated by the phase noise of the synthesizers, switching the roles of the synthesizers potentially allows for low-phase-noise integrated synthesizers which in turn reduce the pre-PA filtering requirement. Also, as previously mentioned, energy located at three times the carrier frequency can intermodulate and degrade the modulation accuracy. In an indirect upconversion transmitter, energy is generated at three times the carrier frequency from the 3LO2 $\times$ 3LO1 mixing product. However, due to the rejection of the third IF harmonic, third-order intermodulation is a less significant problem in the HRT. Consequently, the pre-PA RF filter is no longer needed to prevent significant third-order intermodulation. As a result, PA integration is now possible, because the RF filtering can be performed with one RF filter after the PA.

The next section will discuss some of the important details of the HRT, focusing on the HRM and frequency synthesizers.

III. Transmitter Details

A. Harmonic-Rejection Mixer

A key building block in the HRT is the harmonic-rejection mixer (HRM). Switching mixers are commonly used in RF transceivers because of their numerous advantages compared to other mixer topologies [9]. However, these mixers generate harmonics of the local oscillator frequency, which consequently need filtering. The top half of Fig. 5(a) shows a conventional switching mixer in which the baseband signal is effectively multiplied by a square-wave LO2 signal. The resulting upconverted signal now has relatively large copies of the baseband signal located at odd multiples of the LO frequency. Typically, a high-Q filter is needed to attenuate these copies. Alternatively, an HRM could be used to attenuate the third and fifth LO harmonics, reducing the IF filtering requirement. The fundamental concept of the HRM, shown in Fig. 5(b), is to multiply the baseband signal by a 3-bit, amplitude-quantized sinusoid, $f_{\mathrm{LO2h}}(t)$. Because the first harmonic of $f_{\mathrm{LO2h}}(t)$ is located

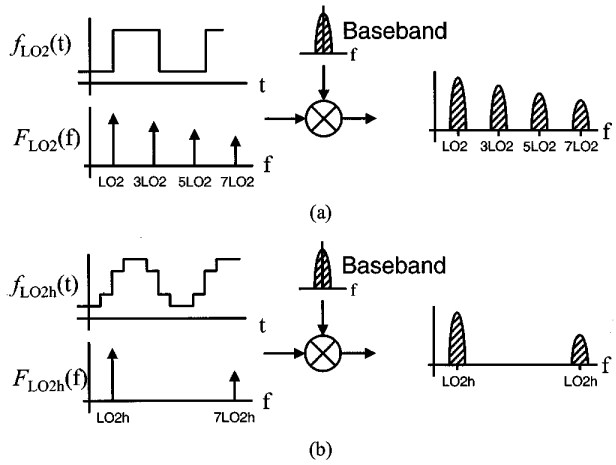

Fig. 5. (a) Conventional switching mixer. (b) Harmonic-rejection fundamentals.

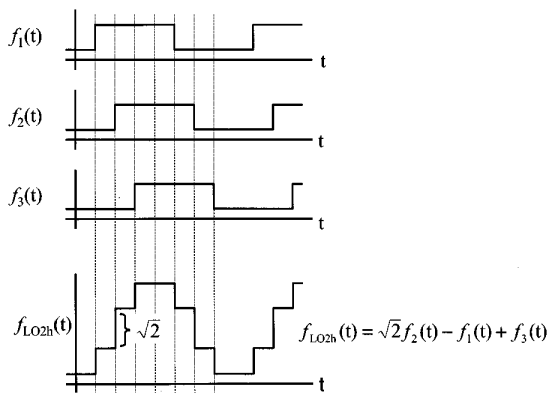

Fig. 6. Harmonic-rejection signal generation.

at seven times the fundamental frequency, the first significant copy of the upconverted baseband signal is also located at seven times the fundamental frequency. Consequently, the IF filtering requirement is greatly relaxed, leading to removal of the IF filter. The next challenge was to generate $f_{\mathrm{LO2h}}(t)$ while maintaining the advantages of using a current-commutating switching mixer. Current-commutating switching mixers allow for a relatively low LO swing, which is critical for integration using low-Q components.

To generate $f_{\mathrm{LO2h}}(t)$, three square waves are summed as shown in Fig. 6. To accurately represent a quantized sinusoid, the magnitude of $f_2(t)$ is scaled by $\sqrt{2}$. To better understand the rejection of the third and fifth harmonics, it is instructive to expand the three square waves using a Fourier series. The Fourier series representation of the three square waves up to the fifth-order component is given by

$$f_1(t) = \frac{\sqrt{2}}{\pi}\left[(\cos(\omega t) - \sin(\omega t)) + \frac{1}{3}(\cos(3\omega t) + \sin(3\omega t)) - \frac{1}{5}(\cos(5\omega t) - \sin(5\omega t))\ldots\right] \quad (1)$$

$$f_2(t) = \frac{2}{\pi}\left[\cos(\omega t) - \frac{1}{3}\cos(3\omega t) + \frac{1}{5}\cos(5\omega t)\ldots\right] \quad (2)$$

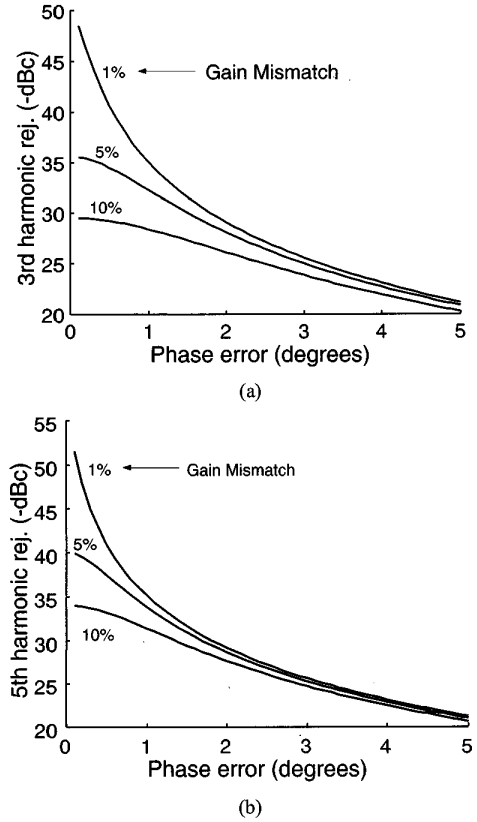

Fig. 7. Harmonic-rejection with mismatch. (a) For third harmonic. (b) For fifth harmonic.

$$f_3(t) = \frac{\sqrt{2}}{\pi}\left[(\cos(\omega t) + \sin(\omega t)) + \frac{1}{3}(\cos(3\omega t) - \sin(3\omega t)) - \frac{1}{5}(\cos(5\omega t) + \sin(5\omega))\ldots\right]. \quad (3)$$

Summing the three ideal square waves with $f_2(t)$ scaled by $\sqrt{2}$ results in the total rejection of the third and fifth harmonics. However, similar to a single-sideband mixer, gain and phase mismatch result in nonideal cancellation of the third and fifth harmonics. The rejection of the third and fifth harmonic are given by

$$\mathrm{HRM}_3 = \left(\frac{1}{9}\right)((1 - \cos(3\theta)(1+\Delta))^2 + ((1+\Delta)\sin(3\theta))) \quad (4)$$

$$\mathrm{HRM}_5 = \left(\frac{1}{25}\right)((1 - \cos(5\theta)(1+\Delta))^2 + ((1+\Delta)\sin(5\theta))) \quad (5)$$

where Δ is the gain mismatch and θ is the phase mismatch. The rejection depends strongly on the phase error in the original signal. Shown in Fig. 7 is the harmonic rejection plotted as a function of phase error for different gain errors. Fig. 7(a) shows the rejection of the third harmonic while Fig. 7(b) shows the rejection of the fifth harmonic. Note that as the phase and gain error increase the rejection of the third harmonic approaches 9.5 dBc while the rejection of the fifth harmonic approaches 14 dBc, which are the levels of an ideal square wave. For one-

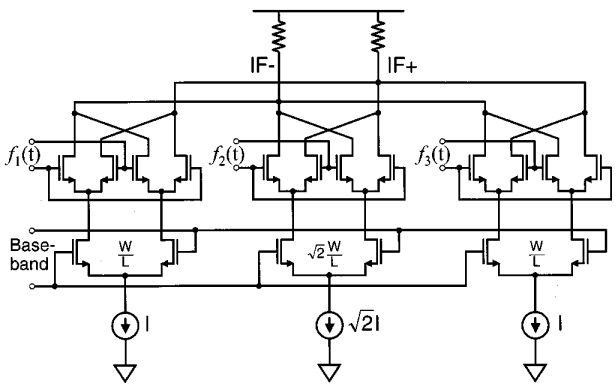

Fig. 8. Harmonic-rejection mixer circuit diagram.

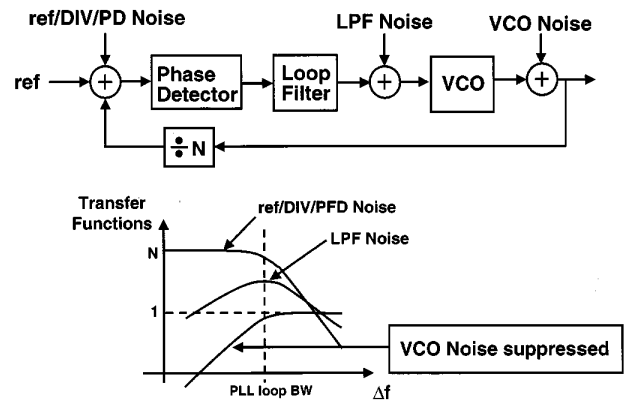

Fig. 9. VCO phase-noise suppression in wide-loop-bandwidth PLL.

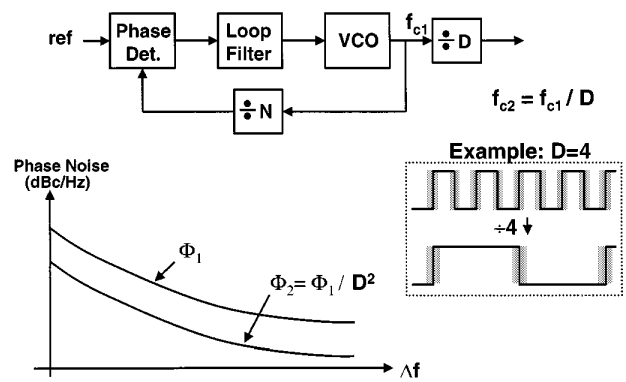

Fig. 10. Phase noise of low-frequency synthesizer.

degree phase error and 1% matching, approximately 35 dB of rejection is achieved for both the third and fifth harmonics.

To implement the HRM, each square wave, $f_1(t)$, $f_2(t)$, and $f_3(t)$, is mixed with the baseband signal and then the three outputs are summed. The advantage of this approach is that a low-noise switching mixer can now be used. However, a potential disadvantage is that scaling the LO voltage, by $\sqrt{2}$ in this case, will not proportionally scale the output voltage swing. The simplified circuit schematic for the HRM is shown in Fig. 8. The HRM consists of three current-commutating submixers. The transconductance stage of each submixer is driven with the identical baseband signal. However, the switches are driven by the three phase-shifted square waves. The current output of the three submixers is summed to generate the final output signal. Consequently, the baseband signal is effectively multiplied by a 3-bit amplitude-quantized sinusoid. To scale $f_2(t)$ by $\sqrt{2}$, the current switched in the middle submixer was increased by $\sqrt{2}$ by scaling the tail current source. Furthermore, to maintain an equivalent linearity performance in the three submixer transconductance stages, the input transistors were also scaled in the middle submixer to give a V_{dsat} that is equal in the three submixers.

B. Frequency Synthesizers

This transmitter architecture offers advantages with respect to full integration of the frequency synthesizer with on-chip low-Q VCOs. As previously mentioned, channel tuning is now performed with the low frequency synthesizer while the RF synthesizer is fixed in frequency. This achieves lower phase noise than the standard configuration because it allows for the use of a wide loop bandwidth for the RF synthesizer.

Performing channel-tuning with the lower frequency IF synthesizer allows the RF synthesizer to have an extended loop bandwidth, which has the effect of suppressing the close-to-carrier phase noise produced by the VCO. This may be better understood by evaluating the phase-noise transfer functions of the various components within a PLL to the output of the synthesizer, as illustrated in Fig. 9. Here, the phase-noise transfer function from the VCO to the PLL output has a high-pass characteristic relative to the carrier. Because the channel tuning is performed using the lower frequency IF synthesizer, the comparison frequency of the RF synthesizer can be significantly raised, by as much as a few orders of magnitude. Typically, for reasons related to the stability of a second-order PLL, the loop bandwidth must be anywhere from a fourth to a tenth of the comparison frequency. Therefore, the higher comparison frequency allows an increased loop bandwidth for the RF synthesizer, significantly extending the close-to-carrier bandwidth where VCO phase-noise suppression will occur. The overall RF synthesizer close-to-carrier phase-noise performance can then be designed such that the phase-noise performance is no longer dominated by a noisy integrated VCO using low-Q components in the tank circuit.

Although the lower frequency synthesizer must now perform channel tuning, lower phase noise, relative to the carrier power, can inherently be achieved due to the lower operating frequency. In this transmitter system, narrow channel tuning must be performed. Consequently, the maximum reference frequency and PLL loop bandwidth are limited, ultimately reducing the band of close-to-carrier VCO phase-noise suppression. The concept of inherently lower phase noise at lower frequencies may be understood with a time-domain interpretation, which is illustrated in Fig. 10. Assume for the moment that the PLL used to synthesize the channel spacing required by a narrow-band system produces an output at RF, instead of IF (again, the loop bandwidth would be small). If the output of this synthesizer is divided down to the IF frequency, there is an inherent lowering in both the rms jitter and phase noise as compared to the carrier.

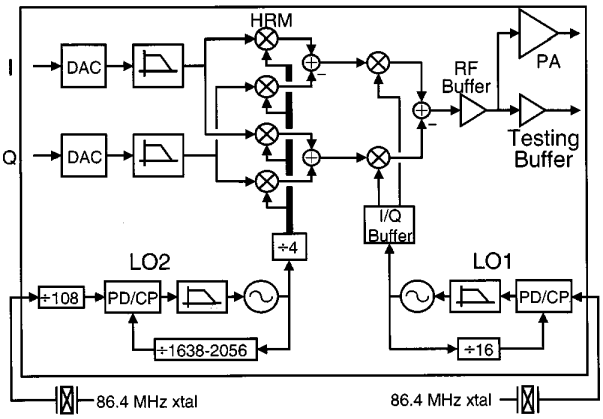

Fig. 11. CMOS prototype HRT block diagram.

This is illustrated in Fig. 10 for $D = 4$, where the time-domain waveform at the output of the synthesizer is shown at the bottom. Before the divider, each edge of the waveform contains jitter, resulting from noise generated inside the PLL. If it is assumed that an idealized noiseless divider is used to lower the frequency by a divider ratio D, then the divider will only capture the timing jitter from one of D edges, yet the period of the fundamental waveform increases by a factor of D. Stated differently, the rms timing jitter on the lower frequency LO, at the divider D output, will have the same timing jitter on each edge, however, the period of the waveform is increased by a factor of D. Thus, the jitter relative to the fundamental period has decreased by a factor D. For close-to-carrier phase noise, the timing error created from edge to edge is correlated at the output of the divider. Because of this correlation in timing error from edge to edge, the effect of a noiseless divider is to reduce the close-to-carrier phase noise by the square of the division ratio, in this case D. In the actual implementation of the IF synthesizer used in the transmitter prototype, the channel-tuning synthesizer produces an output in the range of 1.3104 to 1.4704 GHz, in 800-kHz steps. The IF synthesizer output is then divided down by a factor of 4; thus, the close-to-carrier phase noise produced at the output of the synthesizer is reduced by a factor of 16.

The RF synthesizer used by this prototype transmitter has been previously described in [10] and realizes a 1.3824-GHz oscillator with a loop bandwidth of 8 MHz. The IF synthesizer produces frequencies from 327.6 to 367.6 MHz in 200-kHz steps and has a 40-kHz loop bandwidth.

IV. CMOS Prototype

A CMOS prototype HRT was fabricated in a 0.35-μm double-poly five-layer metal process. A block diagram of the HRT is shown in Fig. 11. The HRT integrated the entire transmit signal path from the DACs to the PA, including two frequency synthesizers. Ten-bit digital I and Q baseband signals are brought on chip and passed through two 10-bit resistor string DACs and then filtered by two Sallen & Key third-order low-pass filters. The signals are then upconverted to a variable IF using four HRMs. Four mixers are used to provide image rejection for the baseband signal and to generate both I and Q IF signals. The IF signals are then upconverted to RF using two inductively loaded current-commutating mixers. The RF signal is then buffered before being driven off-chip with either a testing buffer or an integrated class-C PA. The testing buffer is capable of driving 0 dBm into 50 Ω, while the PA is capable of delivering 25 dBm. A die micrograph is shown in Fig. 12.

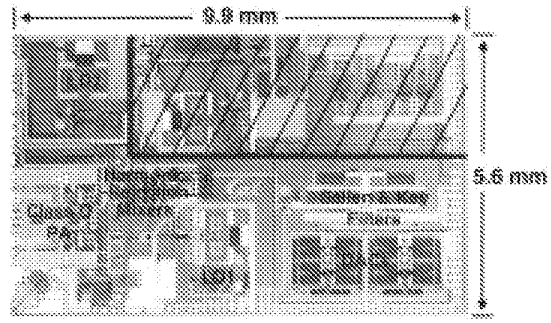

Fig. 12. Die photo.

With the high level of integration implemented in this work, coupling between circuits and circuit blocks can severely degrade performance. The chip was fabricated in an epitaxial process; the epitaxial layer had a resistivity of 10 Ω·cm, while the substrate had a resistivity of 0.01 Ω·cm. With such a low substrate resistivity, it is quite possible that large signals injected into the substrate from the digital circuits or from the power amplifier (PA) can couple back into the sensitive analog sections. To reduce the effects of substrate coupling, three general techniques were used throughout the chip. First, a fully differential signal path was used from the output of the DACs through the output of both the PA and the testing buffer. Ideally, a differential circuit will see coupling from the substrate, due to other circuit blocks, as common-mode noise, and will reject those signals. Both frequency synthesizers were also implemented in a fully differential fashion, including the VCO control voltages. Differential control voltages were used to maximize the immunity of the frequency synthesizers to coupling through the substrate, from other blocks as well as each other. Second, independent supplies, which were heavily bypassed both on and off chip, were used for each of the circuit blocks. This was done so that the local supply and ground would move together; any voltage fluctuations on either the ground or supply nodes would ideally not impact the signals as they moved through the signal path. Third, multiple substrate contacts were placed around the transistors so that the body would move in unison with the local supply and ground. Therefore, any substrate coupling would also be coupled into the supply and ground local to a given circuit block, and would therefore minimize the effect of that coupling on the differential signal path.

To better understand the circuit implementation, a more detailed description of some of the key circuit blocks will follow. The blocks to be discussed include the DAC, the Sallen & Key filter, the RF quadrature generator, and the PA.

A. DAC

Fig. 13 shows the basic structure of the resistor string DAC used in the transmitter. The digital-to-analog conversion is made

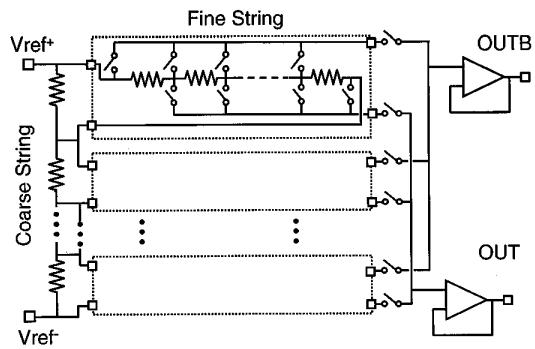

Fig. 13. Dual resistor string DAC schematic.

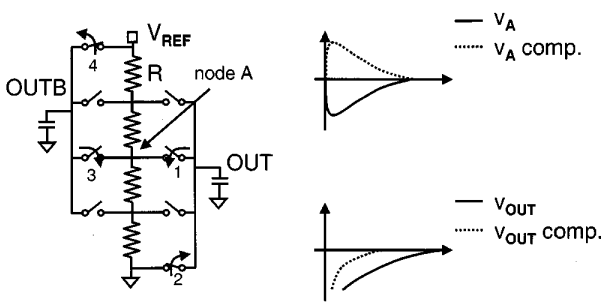

Fig. 14. Glitch reduction circuit technique for DAC.

in two steps using two 5-bit resistor strings that select the appropriate output analog level. In the design of a resistor-string DAC, there is usually a tradeoff between the maximum speed of the DAC and its power consumption. As the total value of the resistance in the resistor string increases, the overall power consumption is reduced, but the time needed for the output voltage to settle is also increased. A critical factor in the settling time is the issue of capacitive coupling between the output and the intermediate nodes in the resistor string. The intermediate nodes in the resistor string should stay at a fixed voltage at all times, but as switches close and open and different intermediate nodes are tied to the output, there is an instantaneous change on the intermediate nodes (for example, node A in Fig. 14) that causes an increase in the settling time of the output. This problem can be reduced through the use of a set of replica switches and a dummy capacitor, as shown in Fig. 14. Switches 3 and 4 switch in opposition to switches 1 and 2, respectively, and thereby induce an equal and opposite effect on the intermediate node voltage A. The uncompensated voltage at node A is summed with the glitch reduction due to the switches 3 and 4, resulting in a reduced fluctuation voltage at node A, as shown in Fig. 14. This allows the voltage at the output to settle more quickly to its desired value; furthermore, in simulation, the power consumption can be reduced as much as 30% for a given settling time. Moreover, the use of complementary switches performs the operation of single-ended to differential conversion. In the actual implementation, the function of the dummy capacitor was performed with the complementary output buffer.

B. Sallen & Key Filter

After the DACs, the I and Q baseband signals are filtered before upconversion. The filtering is performed with a third-order Sallen & Key low-pass filter. The filter uses a buffer in the feedback path to improve the rejection. Shown on the left side of Fig. 15 is a conventional Sallen & Key filter. The feedback capacitor C_1 introduces a zero in the transfer function which decreases the attenuation at higher frequencies. However, the wide-band noise is critical in transmitters, because it may corrupt the highly sensitive receivers nearby. One method of improving the attenuation, at the cost of increased power, is to increase the bandwidth of the forward buffer used in the filter. Alternatively, the effect of the zero may be reduced by adding a buffer in the feedback path as shown in the right side of the Fig. 15. The buffer blocks the zero introduced by the capacitor allowing for a lower bandwidth in the forward buffer. The plot shows the expected attenuation for the two configurations with equal power consumption. At higher frequencies, approximately a 30-dB improvement in the high-frequency attenuation is predicted by simulation with the feedback amplifier, as compared to a conventional Sallen & Key filter consuming equal power.

C. RF Quadrature Generator

The amount of sideband suppression obtained by an image-rejection mixer is highly dependent on the phase accuracy of the I and Q LO signals. For this transmitter system, the quadrature accuracy of the I and Q LO signals further relax the RF filtering requirement of the IF image. Additional and specific requirements of the quadrature generation circuitry used by this transmitter are that both the loading at the output of the synthesizer (or VCO) and the degradation in the VCO tank Q be minimized. Traditional methods of generating quadrature from a single phase include frequency dividers and passive filters realized with resistors and capacitors. The first LO (RF synthesizer) directly generates the frequency required for upconversion by the corresponding mixers, eliminating the possibility of using a frequency divider to generate quadrature LOs. Two common passive filter approaches include using an RC-CR filter or an asymmetric polyphase filter [11]. These passive methods for generating quadrature suffer from a variety of drawbacks, which can include both phase and amplitude frequency dependence, phase error from either component mismatch or process variations, and loss in LO carrier power.

Despite the well-known problems, polyphase filters are still an effective method for generating highly accurate quadrature signals from a single phase. However, there are several mechanisms of loss in this filter that typically require power-consuming buffers at the input and output of the filter. Polyphase filters generate quadrature from a single phase by passing the signal through multiple stages of an *RC* network when the signal frequency is near the 3-dB frequency of the *RC* network. Other contributing factors to loss in a polyphase filter include the parasitics associated with bottom plate capacitance used to create the capacitors. If the output is directly coupled to the mixer input, then an ac-coupling capacitor might be needed, which introduces additional parasitics and loss in LO carrier power.

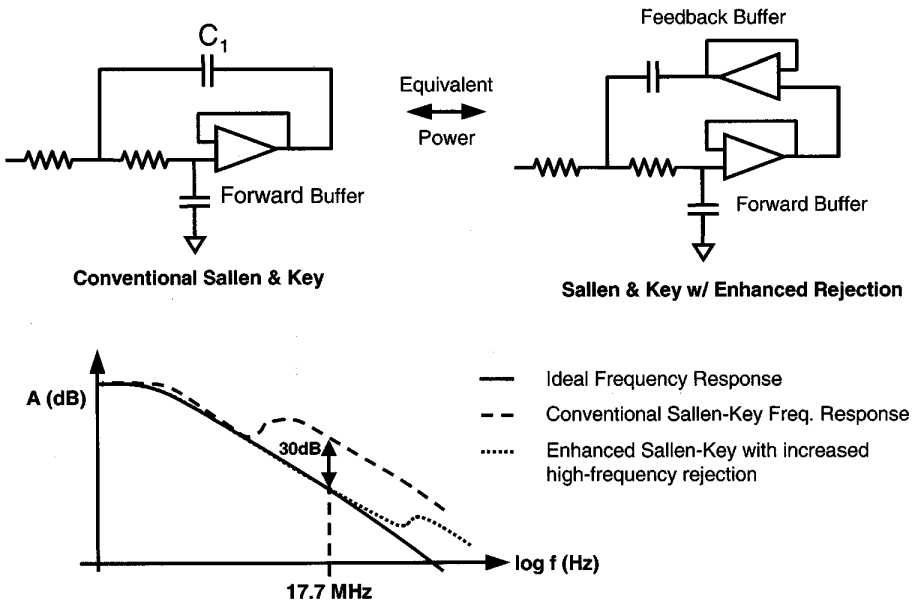

Fig. 15. Improved rejection from Sallen & Key filter.

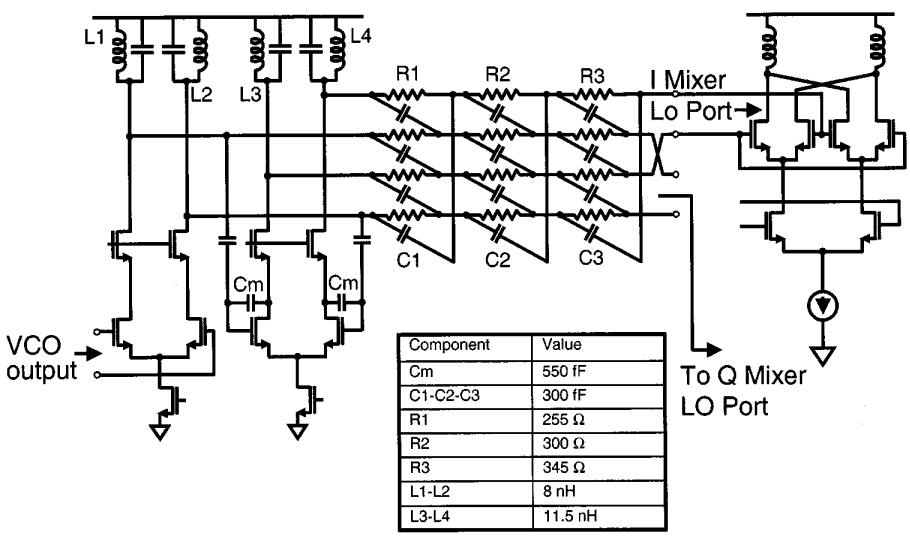

Component	Value
Cm	550 fF
C1-C2-C3	300 fF
R1	255 Ω
R2	300 Ω
R3	345 Ω
L1-L2	8 nH
L3-L4	11.5 nH

Fig. 16. High-frequency (LO1) VCO buffer quadrature generator circuit schematic.

The circuit shown in Fig. 16 reduces one mechanism of loss in the polyphase filter by using a buffer which drives the input of the filter with signals roughly in quadrature and thus eliminates the inherent 3-dB loss associated with converting a single phase to quadrature phases. Two common source buffers before the polyphase generate signals which are roughly 90° out of phase at the inductively loaded nodes when the operating frequency is near the g_m/C_m of the second buffer [12]. In addition, the input impedance looking into the buffer is capacitive with the exception of the gate resistance r_g, therefore minimizing the reduction in the VCO tank Q and loading. The Q of the LC tank at the buffer output, shown as L1-L4 in Fig. 16, is approximately 1.5 when loaded with the polyphase filter. The mixer LO input was designed to have a common mode at $V_{\rm dd}$ and thus the need for an ac-coupling capacitor has been eliminated as well as its associated loss.

D. Power Amplifier

Previous sections detailed the transmitter architecture, including the benefits of the harmonic rejection architecture with respect to the filtering required before the PA. These benefits allow for the use of an integrated highly nonlinear PA when a constant-envelope modulation scheme is used. Recent efforts that have investigated nonlinear PAs have focused primarily on switch-mode nonlinear PAs, such as class-D and class-E PAs [13], [14]. One drawback to switch-mode PAs, especially with respect to their potential for integration, is the need for a dc–dc converter in order to perform power control, which is

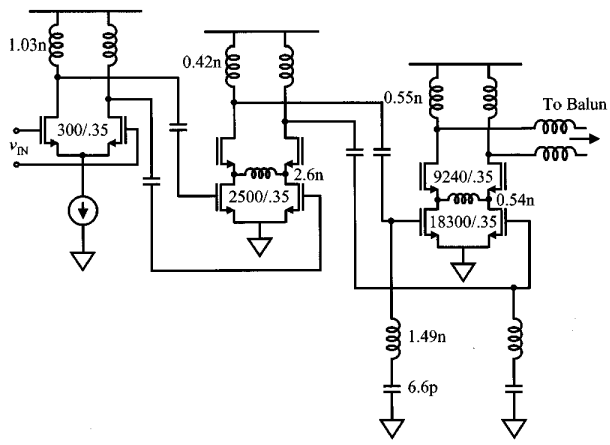

Fig. 17. Class-C power amplifier circuit schematic.

required in most cellular communications systems. In general, the only way to vary the output power level of a switch-mode PA is to vary the power supply; thus the need for the dc–dc converter, which can be difficult to integrate. Therefore, a different solution was explored.

In this work, a class-C architecture was used for the PA. The class-C architecture is an extension of the class-A and class-B architectures. In the class-C architecture, the angle of conduction (the portion of the cycle when the device is on) is less than 180°; the device is biased such that it is off for more than one-half the cycle by setting the dc bias below the threshold voltage of the device. Consequently, the input signal turns the device on for only a fraction of the period. This reduction in the period when the device conducts current serves to reduce the power consumed in the device and thus potentially raises the efficiency of the PA.

In the design of submicron CMOS PAs, a key limitation is the oxide breakdown voltage, which limits the available voltage swing at the drain of the transistor. As a result, the load impedance seen by the device needs to be extremely low in order to deliver the required amount of power without damaging the device. Furthermore, the current level must rise in proportion with the reduced voltage swing. Since CMOS generally has a poor transconductance when compared with silicon bipolar or Gallium Arsenide technologies, the device sizes required can be quite large in order to generate the required output power.

Fig. 17 shows the circuit diagram of the three-stage fully differential class-C PA used in this work. The stages are ac-coupled in order to allow the input device of each stage to be biased independent of the output of the previous stage. Since the PA was to be used in an integrated environment, the previous stages would likely not be able drive a heavy load; therefore, three stages were used in order that the first stage would not load down the output of the mixer. The first stage was biased in a class-A fashion, with a variable tail current source that controls the gain and thus the output power level. The final two stages are biased in a class-C fashion and use a cascode structure with the top devices biased at the supply in order to reduce the stress on the oxide due to voltage excursions at the outputs of those stages. At the input to the final stage, a different tuning technique was used to peak the gain at the desired frequency. Due to the high current drive required and the poor transconductance of CMOS, the output transistor size was extremely large (18 300 μm/0.35 μm); using a single spiral inductor to tune out all the capacitance between the second and third stages required an extremely small value inductor (on the order of 0.1 nH). That inductor was quite difficult to implement without parasitic trace inductance affecting the tuning at that node. Instead, a series LC was used in parallel with the gate capacitance of the final stage in order to provide a peaking of the impedance at that node. Furthermore, inductors were used across the differential cascode node in the second and third stages, in order to reduce the current required to charge and discharge the capacitors at those nodes and boost the efficiency. The inductors used at the output of the first and second stages as well as those at the cascode nodes were implemented as spiral inductors on chip; the other inductors used in this circuit were implemented as bond wires, in order to take advantage of their higher Q. The inputs of the second and third stages were biased at 0.35 V with a bias voltage generated on chip.

V. Results

Although the HRT was designed to facilitate multistandard operation, the performance of the transmitter was tested with the DCS 1800 specifications. This up-banded version of GSM was chosen for a number of reasons. First, it requires very high modulation accuracy from the transmitter. Second, DCS 1800 requires very low unwanted spurious transmission especially in the receive band. Finally, DCS 1800 uses a constant envelope modulation scheme making it well suited for use with a highly nonlinear class-C power amplifier.

A. Measured Results With Testing Buffer

The results in this section were measured using a testing buffer after the mixers, in parallel with the PA, as opposed to the PA itself. The next section will compare some of this data when the measurements were taken at the output of the PA instead of the testing buffer.

A critical test for all transmitters is the single-sideband test in which a single baseband tone is upconverted to RF. Although I/Q modulator-based transmitters are ideal for multistandard operation, gain mismatch and phase error in the modulator generally limit the modulation accuracy. Shown in Fig. 18 is the output of the transmitter when a 50-kHz baseband tone is upconverted to RF. The unwanted image suppression was measured at -56 dBc, implying that the gain and phase were matched very well throughout the transmitter. This was accomplished with careful layout techniques and the measurement transmitter has no external tuning. The carrier suppression was measured at -38 dBc while the third-order distortion was measured at -46 dBc. The third-order distortion was dominated by the baseband inputs of the HRMs.

Another key transmitter performance test is measuring the output when a modulated baseband signal is used as opposed to a single tone. Typically, different RF standards provide a spectral mask under which the transmitted signal must fall. Meeting

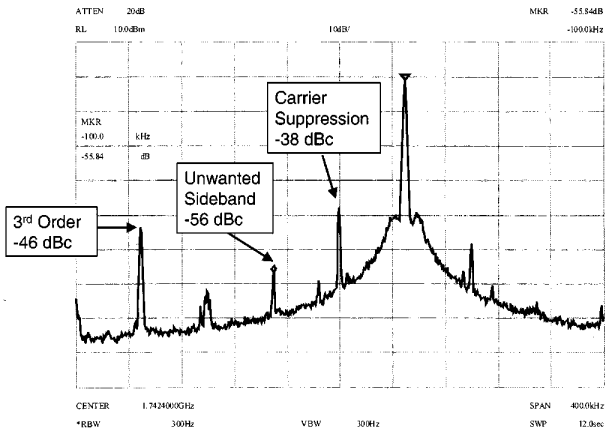

Fig. 18. Transmitter output with single-sideband test.

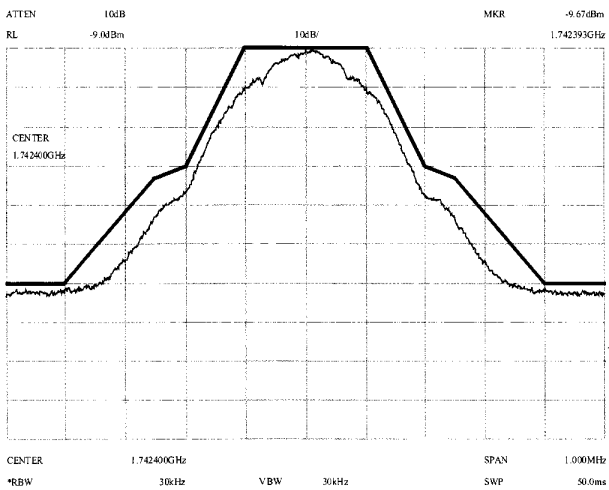

Fig. 19. Transmitter output with modulated baseband signal.

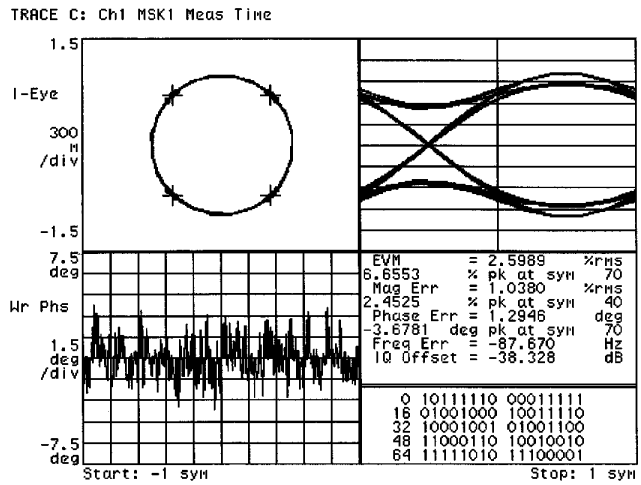

Fig. 20. Modulation accuracy of transmitter.

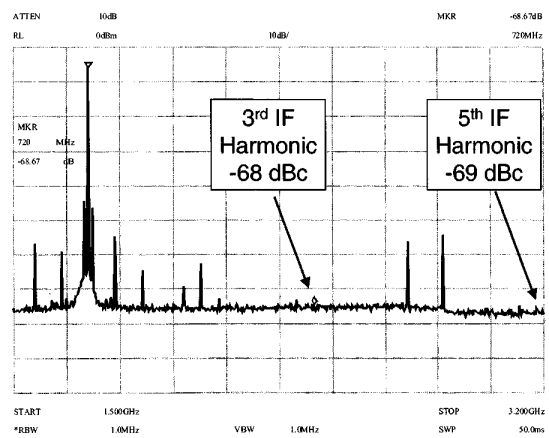

Fig. 21. Wide-band spectrum at transmitter output.

this specification requires low phase noise from the frequency synthesizer and high linearity in the baseband circuits. To test the HRT a DCS 1800 GMSK modulated baseband signal was used. Shown in Fig. 19 is the measured output spectrum along with the DCS-1800 spectral mask requirement. The measured results are limited by the phase noise of the frequency synthesizers.

Although the spectral mask limits the transmitted noise and unwanted spectral emissions, it does not measure the modulation accuracy. This test is typically performed using a modulated baseband signal and comparing the transmitted signal with the ideal signal. The DCS-1800 standard requires that the rms phase error is less than 5° with a peak phase error no larger than 20°. The measured results for the HRT are shown in Fig. 20 and the rms phase error is 1.3° while the peak phase error is 3.7°. This error was probably caused by the nonidealities in the I/Q modulator along with the phase noise of the synthesizers.

In addition to the close-in spectral mask requirements, DCS 1800 limits the unwanted transmissions that could potentially fall in the receive band. Consequently, the limit for the transmitted noise measured at 20-MHz offset from the carrier is -151 dBc/Hz. This transmitter was measured at -126 dBc/Hz. This noise was primarily caused by the phase noise of the frequency synthesizers. To meet the DCS 1800 specification, an RF filter is needed with 25 dB of attenuation at a 20-MHz offset. Such attenuation is achievable with a single RF filter allowing for a highly integrated transmitter requiring only one filter afterwards.

Finally, as a test of the HRM, a wide-band output spectrum was measured. The results are shown in Fig. 21. The suppression of the third IF harmonic was measured to be -68 dBc while the fifth IF harmonic suppression was measured to be -69 dBc. Although the third IF harmonic was further suppressed by the IF–RF image-reject mixer, the fifth IF harmonic was only suppressed by the HRM. The third IF harmonic on the low side of the carrier frequency was only suppressed by the HRM, and it was below the noise floor of the spectrum analyzer.

B. Measured Results With PA

The transmitter was also tested with the class-C PA. Shown in Fig. 22 are the results of a single-sideband test using the same 50-kHz signal. The test setup introduced approximately 2 dB of

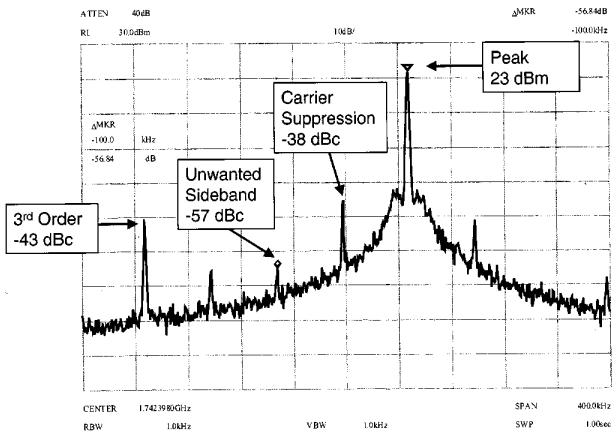

Fig. 22. Single-sideband test with PA output.

TABLE I
SUMMARY OF MEASURED RESULTS

VDD = 3 Volts Temp.= 25°C

	Testing Buffer	PA
Single Sideband Suppression	-56 dBc	-57 dBc
LO2 3rd Harmonic Spur	-68 dBc	-68 dBc
LO2 5th Harmonic Spur	-69 dBc	-69 dBc
IF Image Suppression	-60 dBc	-60 dBc
RF Carrier Suppression	-38 dBc	-38 dBc
RMS Phase Error	1.3°	N/A
Peak Phase Error	3.7°	N/A
20 MHz Carrier Offset Noise	-126 dBc/Hz	-121 dBc/Hz
3rd Order Distortion	-46 dBc	-43 dBc
Output Power	0 dBm	25 dBm
Active Chip Area	20 mm^2	24 mm^2
Technology	0.35 μm DP-5M CMOS	0.35 μm DP-5M CMOS

loss between the output of the PA and the measurement equipment. The differential to single-ended conversion was accomplished using a microstrip balun similar to the balun described in [14]. Comparing Fig. 22 with Fig. 18 shows very little difference. The integrated PA had little effect on the transmitter output when a single-sideband test was performed. Furthermore, although not shown here, the wide-band spectrum also showed little change compared to the wide-band output measured at the testing buffer. Although the integrated PA had little effect on the modulation performance, the noise at 20-MHz offset was affected by the PA. As previously mentioned, the noise measured with the testing buffer was -126 dBc/Hz while the noise measured with the PA was -121 dBc/Hz. Substrate coupling is the likely cause of the increased noise.

The integrated class-C PA was designed for 1.5-W peak power and was tested as standalone component. The peak measured power of the standalone PA was measured at 1.2 W. This power was not achieved in the integrated version because of the lower than expected gain in the transmitter. This was due to lower than expected Qs for the on-chip spiral inductors which are critical for gain.

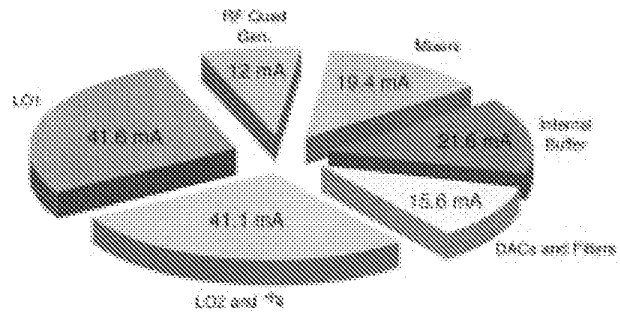

Fig. 23. Transmitter current consumption.

C. Results Summary

A summary of the measured results is shown in Table I. The table shows the results when measured with the testing buffer and the PA. Shown in Fig. 23 is the power consumption of the transmitter excluding the testing buffer and the PA. The lower than expected Qs negatively impacted the power consumption. The current for certain circuit blocks was increased to achieve the desired output power. Because the gain was lower than expected in the transmit path, the power output and the efficiency of the PA were significantly lower than expected.

VI. CONCLUSION

A fully integrated CMOS transmitter has been demonstrated. The entire transmit signal path including the PA and the frequency synthesizers were integrated in a 0.35-μm double-poly five-layer metal CMOS process. The transmitter demonstrated cellular performance requiring only a single RF filter after the PA. The need for pre-PA filtering was removed through the use of a harmonic-rejection transmitter and a wide-loop-bandwidth RF synthesizer. The performance met many of the key requirements of DCS 1800, an up-banded version of GSM. Furthermore, due to careful planning, the effect of on-chip coupling was minimized. This was evident by the fact that the chip incorporated two frequency synthesizers, two DACs, and a 25-dBm PA. Furthermore, the PA had a minimal effect on the performance when the PA output was compared to the output from a post-mixer testing buffer.

ACKNOWLEDGMENT

The authors would like to thank STMicroelectronics for their support and for chip fabrication services. Further, the authors are grateful to Agilent Technologies, Atmel, Conexant Systems, National Semiconductor, Nokia Mobile Phones, Nortel Networks, and Philips Research for their valued contributions.

REFERENCES

[1] P. R. Gray and R. Meyer, "Future directions of silicon ICs for RF personal communications," in *Proc. IEEE Custom Integrated Circuits Conf.*, May 1995, pp. 83–90.

[2] T. Cho *et al.*, "A single-chip CMOS direct-conversion transceiver for 900-MHz spread-spectrum digital cordless phones," in *IEEE Int. Solid-State Circuits Conf. Dig. Tech. Papers*, Feb. 1999, pp. 228–229.

[3] J. Rudell *et al.*, "A 1.9-GHz wide-band IF double conversion CMOS receiver for cordless telephone applications," *IEEE J. Solid-State Circuits*, vol. 32, pp. 2071–2088, Dec. 1997.
[4] H. Samavati *et al.*, "A fully integrated 5-GHz CMOS wireless-LAN receiver," in *IEEE Int. Solid-State Circuits Conf. Dig. Tech. Papers*, Feb. 2001, pp. 208–209.
[5] J. L. Tham *et al.*, "A 2.7-V 900-MHz/1.9-GHz dual-band transceiver IC for digital wireless communication," *IEEE J. Solid-State Circuits*, vol. 34, pp. 286–291, Mar. 1999.
[6] K. Irie *et al.*, "A 2.7-V GSM RF transceiver IC," *IEEE J. Solid-State Circuits*, vol. 32, pp. 2089–2096, Dec. 1997.
[7] T. D. Stetzler *et al.*, "A 2.7–4.5 V single chip GSM transceiver RF integrated circuit," *IEEE J. Solid-State Circuits*, vol. 30, pp. 1421–1429, Dec. 1995.
[8] S. V. Kishore *et al.*, "A SOI-BiCMOS RF-transmitter for personal digital cellular communication (PDC)," in *Symp. VLSI Circuits Dig. Tech. Papers*, June 2000, pp. 62–65.
[9] M. T. Terrovitis and R. G. Meyer, "Noise in current-commutating CMOS mixers," *IEEE J. Solid-State Circuits*, vol. 34, pp. 772–783, June 1999.
[10] L. Lin *et al.*, "A 1.4-GHz differential low-noise CMOS frequency synthesizer using a wideband PLL architecture," in *IEEE Int. Solid-State Circuits Conf. Dig. Tech. Papers*, Feb. 2000, pp. 204–205.
[11] M. Gingell, "Single sideband modulation using sequence asymmetric polyphase networks," *Electron. Commun.*, pp. 21–25, 1973.
[12] D. K. Shaeffer *et al.*, "A 115 mW, 0.5 μm CMOS GPS receiver with wide dynamic range active fitler," *IEEE J. Solid-State Circuits*, vol. 33, pp. 2219–2231, Dec. 1998.
[13] D. Su and W. McFarland, "A 2.5-V, 1-W monolithic CMOS RF power amplifier," in *Proc. IEEE Custom Integrated Circuits Conf.*, May 1997, pp. 189–192.
[14] K. C. Tsai and P. R. Gray, "A 1.9-GHz CMOS class E power amplifier for wireless communications," *IEEE J. Solid-State Circuits*, vol. 34, pp. 962–970, July 1999.

Jeffrey A. Weldon received the B.S. degree from the University of California, Berkeley, in engineering physics in 1992. He is currently working toward the Ph.D. degree at the University of California, Berkeley, in the Electrical Engineering and Computer Science Department, where he is studying analog circuit design for RF applications.

His research focuses on wireless transmitter architectures well suited for high levels of integration in CMOS. In addition, he is investigating CMOS mixers for wireless applications.

Mr. Weldon was a co-recipient of the 1998 ISSCC Jack Kilby Best Student Paper Award.

R. Sekhar Narayanaswami was born in Lubbock, TX, on November 5, 1971. He received the B.S. and M.S. degrees in electrical engineering and computer sciences in 1993 and 1998, respectively, both from the University of California, Berkeley. He is currently working toward the Ph.D. degree in the area of RF analog circuit design in CMOS technologies.

His research focuses on the implementation and integration of RF power amplifiers for mobile devices in CMOS technologies.

Mr. Narayanaswami is a member of Tau Beta Pi and Eta Kappa Nu.

Jacques C. Rudell (S'96–M'00) received the B.S. degree in electrical engineering from the University of Michigan, Ann Arbor. In his junior year, he was dedicated a James B. Angell Scholar. After graduation, he spent two years as an IC Designer and Project Manager at Delco Electronics, Kokomo, IN. While at Delco, his work focused mainly on bipolar analog circuits for automotive applications. In 1991, he returned to graduate school at the University of California, Berkeley. He received the M.S.E.E. degree in 1993, focusing on high-speed low-power digital adaptive equalization techniques for magnetic disk-drive channels employing class-IV partial response. Also at the University of California, Berkeley, he received the Ph.D. degree in 2000, focusing on wireless receiver architectures and systems suitable for high levels of integration in CMOS as well as multistandard/modal operation.

He worked as a Post-Doctoral Researcher at the University of California, Berkeley, in the spring of 2000. Currently, he is an Independent Consultant in Silicon Valley.

Dr. Rudell is a member of Tau Beta Pi and Eta Kappa Nu. He received the 1998 ISSCC Jack Kilby Best Student Paper Award. In 1999, he received the UC Berkeley EECS Demetri Angelakos Memorial Achievement Award.

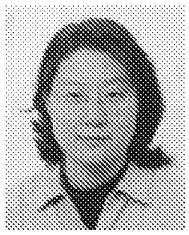

Li Lin received the B.S. degree in electrical engineering from Portland State University, Portland, OR, in 1994, and the M.S. and Ph.D. degrees in electrical engineering from the University of California, Berkeley, in 1996 and 2000, respectively.

Since 2000, she has been with Broadcom Corporation, San Jose, CA, where she is a Staff Scientist working on RF integrated circuit design for wireless communication.

Dr. Lin is a member of Etu Kappa Nu and Tau Beta Pi.

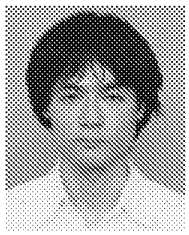

Masanori Otsuka was born in Saitama, Japan, in 1965. He received the B.S. and M.S. degrees in electrical engineering from the Science University of Tokyo, Tokyo, Japan, in 1989 and 1991, respectively.

In 1991, he joined Central Research Laboratory, Hitachi Ltd., Tokyo, and moved to Semiconductor and Integrated Circuits Division in 1995, where he has been engaged in developing CMOS D/A and A/D converters. From 1997 to 1998, he was a Visiting Industrial Fellow in Dr. P. Gray's research group at the University of California, Berkeley. During his stay, he investigated D/A converters for wireless systems.

Sebastien Dedieu received the DESS of Microelectronic and the DEA of Electronic degrees from the University of Bordeaux, France, in 1993.

From 1993 until 1998, he was with STMicroelectronics Central R&D, France, as an Analog Design Engineer in the field of phase-locked loops and clock recovery for ATM (SDH/SONET) and GSM/DCS1800 applications. From 1998 to 1999, he was a Visiting Industrial Fellow in Dr. P. Gray's research group at the University of California, Berkeley. During his stay, he implemented a variable gain amplifier and active filters for a fully integrated RF transceiver. Since 1999, he worked at STMicroelectronics, Crolles, France, on phase quadrature locked loop for digital and cable TV receivers. He is currently developing synthesizers for HiperLAN/2 and 802.11applications. His research interests include mixed RF and analog VLSI circuit design in wireless and cable communications.

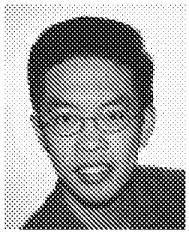

Luns Tee (S'93) received the B.A.Sc. degree in engineering science from the University of Toronto, Toronto, ON, Canada, in 1995. He is currently working toward the Ph.D. degree in electrical engineering at the University of California, Berkeley.

He is currently investigating transmitter linearization techniques for portable wireless applications.

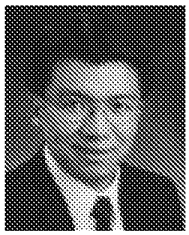

King-Chun Tsai (S'95) received the B.S. degree in electrical engineering from Boston University, Boston, MA, in 1994. He is currently working toward the Ph.D. degree in electrical engineering at the University of California, Berkeley.

He has been a Teaching Assistant in a number of circuit design classes at the University of California, Berkeley. In the summer of 1998, he was with the Silicon Circuits Research Department at Bell Laboratories, Lucent Technologies, where he conducted research in microwave balun design. He joined Marvell Semiconductor Inc. in 2001, where he continued his work in designing RF ICs for wireless applications.

Mr. Tsai was recognized as an Outstanding Graduate Student Instructor at the University of California, Berkeley, in 1996.

Cheol-Woong Lee received the B.S. degree in electrical engineering from the Seoul National University, Seoul, Korea, in 1997. He is currently working toward the Ph.D. degree in electrical engineering at the University of California, Berkeley, where his interest is in RF and analog integrated circuits.

In 1996 and 1997, he investigated and developed a hardware system for 600-dpi color scanner with Thymedia Company Ltd., Seoul, Korea. In 1999, he designed a board to test the multistandard RF monolithic chip at RF research group in the department of electrical engineering at the University of California, Berkeley.

Paul R. Gray (M'69–SM'76–F'80) was born in Jonesboro, AR, on December 8, 1942. He received the B.S., M.S., and Ph.D. degrees from the University of Arizona, Tucson, in 1963, 1965, and 1969, respectively.

In 1969, he joined the Research and Development Laboratory, Fairchild Semiconductor, Palo Alto, CA, where he was involved in the application of new technologies for analog integrated circuits, including power integrated circuits and data conversion circuits. In 1971, he joined the faculty of the Department of Electrical Engineering and Computer Sciences, University of California, Berkeley. His research interests during this period have included bipolar and MOS circuit design, electrothermal interactions in integrated circuits, device modeling, telecommunications circuits, and analog–digital interfaces in VLSI systems. He is the co-author of a widely used college textbook on analog integrated circuits. During year-long industrial leaves of absence from the University of California, Berkeley, he served as Project Manager for Telecommunications Filters at Intel Corporation, Santa Clara, CA, during 1977–78, and as Director of CMOS Design Engineering at Microlinear Corporation, San Jose, CA, during 1984–1985. At the University of California, Berkeley, he has held several administrative posts, including Director of the Electronics Research Laboratory (1985–1986), Vice-Chairman of the EECS Department for Computer Resources (1988–1990), Chairman of the Department of Electrical Engineering and Computer Sciences (1990–1993), and Dean of the College of Engineering (1996–June 2000). He is currently the Executive Vice Chancellor and Provost and Roy W. Carlson Professor of Engineering.

Dr. Gray has been co-recipient of best paper awards at the IEEE International Solid-State Circuits Conference and the European Solid-State Circuits Conference, and was co-recipient of the IEEE R. W. G. Baker Prize in 1980, the IEEE Morris K. Liebman Award in 1983, and the IEEE Circuits and Systems Society Achievement Award in 1987. In 1994, he received the IEEE Solid-State Circuits Award. He served as editor of the IEEE JOURNAL OF SOLID-STATE CIRCUITS from 1977 through 1979, and as Program Chairman of the 1982 International Solid-State Circuits Conference. He served as President of the IEEE Solid-State Circuits Council from 1988 to 1990. He is a member of the National Academy of Engineering.

Electronic Patent Application Fee Transmittal

Application Number:	14614543
Filing Date:	05-Feb-2015
Title of Invention:	WIDEBAND TUNER ARCHITECTURE
First Named Inventor/Applicant Name:	Madhukar Reddy
Filer:	Chad M. Gilles/Julia Villarreal
Attorney Docket Number:	28427US04

Filed as Small Entity

Filing Fees for Utility under 35 USC 111(a)

Description	Fee Code	Quantity	Amount	Sub-Total in USD($)
Basic Filing:				
Pages:				
Claims:				
Miscellaneous-Filing:				
Petition:				
Patent-Appeals-and-Interference:				
Post-Allowance-and-Post-Issuance:				
Extension-of-Time:				

Description	Fee Code	Quantity	Amount	Sub-Total in USD($)
Miscellaneous:				
Request for Continued Examination	2801	1	600	600
		Total in USD ($)		**600**

Electronic Acknowledgement Receipt	
EFS ID:	23473533
Application Number:	14614543
International Application Number:	
Confirmation Number:	5785
Title of Invention:	WIDEBAND TUNER ARCHITECTURE
First Named Inventor/Applicant Name:	Madhukar Reddy
Customer Number:	23446
Filer:	Chad M. Gilles/Julia Villarreal
Filer Authorized By:	Chad M. Gilles
Attorney Docket Number:	28427US04
Receipt Date:	11-SEP-2015
Filing Date:	05-FEB-2015
Time Stamp:	18:38:44
Application Type:	Utility under 35 USC 111(a)

Payment information:

Submitted with Payment	yes
Payment Type	Credit Card
Payment was successfully received in RAM	$600
RAM confirmation Number	5709
Deposit Account	130017
Authorized User	GILLES, CHAD
The Director of the USPTO is hereby authorized to charge indicated fees and credit any overpayment as follows:	

Charge any Additional Fees required under 37 C.F.R. Section 1.21 (Miscellaneous fees and charges)

File Listing:

Document Number	Document Description	File Name	File Size(Bytes)/ Message Digest	Multi Part /.zip	Pages (if appl.)
1	Request for Continued Examination (RCE)	28427US04_Request_for_Continued_Examination_sb30.pdf	697607 bde283d5d6b32b9da5d830d33f6aceade3351584	no	3
Warnings:					
Information:					
2	Information Disclosure Statement (IDS) Form (SB08)	28427US04_IDS__sb08a_EFS-WEB.pdf	613115 06650c3fde3f01c5ad52cfc3493817e7c6a3d92a	no	5
Warnings:					
Information:					
3	Non Patent Literature	NPL1_Weldon_Article.pdf	1970159 93b8c9066e2cd9443818c07aaf7824194c53cc58	no	14
Warnings:					
Information:					
4	Fee Worksheet (SB06)	fee-info.pdf	30544 6b43f86ab2f28e16a4f3d9f093260c55218fd43c	no	2
Warnings:					
Information:					
		Total Files Size (in bytes):	3311425		

This Acknowledgement Receipt evidences receipt on the noted date by the USPTO of the indicated documents, characterized by the applicant, and including page counts, where applicable. It serves as evidence of receipt similar to a Post Card, as described in MPEP 503.

<u>New Applications Under 35 U.S.C. 111</u>
If a new application is being filed and the application includes the necessary components for a filing date (see 37 CFR 1.53(b)-(d) and MPEP 506), a Filing Receipt (37 CFR 1.54) will be issued in due course and the date shown on this Acknowledgement Receipt will establish the filing date of the application.

<u>National Stage of an International Application under 35 U.S.C. 371</u>
If a timely submission to enter the national stage of an international application is compliant with the conditions of 35 U.S.C. 371 and other applicable requirements a Form PCT/DO/EO/903 indicating acceptance of the application as a national stage submission under 35 U.S.C. 371 will be issued in addition to the Filing Receipt, in due course.

<u>New International Application Filed with the USPTO as a Receiving Office</u>
If a new international application is being filed and the international application includes the necessary components for an international filing date (see PCT Article 11 and MPEP 1810), a Notification of the International Application Number and of the International Filing Date (Form PCT/RO/105) will be issued in due course, subject to prescriptions concerning national security, and the date shown on this Acknowledgement Receipt will establish the international filing date of the application.

UNITED STATES PATENT AND TRADEMARK OFFICE

UNITED STATES DEPARTMENT OF COMMERCE
United States Patent and Trademark Office
Address: COMMISSIONER FOR PATENTS
P.O. Box 1450
Alexandria, Virginia 22313-1450
www.uspto.gov

NOTICE OF ALLOWANCE AND FEE(S) DUE

23446 7590 10/05/2015
MCANDREWS HELD & MALLOY, LTD
500 WEST MADISON STREET
SUITE 3400
CHICAGO, IL 60661

EXAMINER
JACKSON, BLANE J

ART UNIT	PAPER NUMBER
2649	

DATE MAILED: 10/05/2015

APPLICATION NO.	FILING DATE	FIRST NAMED INVENTOR	ATTORNEY DOCKET NO.	CONFIRMATION NO.
14/614,543	02/05/2015	Madhukar Reddy	28427US04	5785

TITLE OF INVENTION: WIDEBAND TUNER ARCHITECTURE

APPLN. TYPE	ENTITY STATUS	ISSUE FEE DUE	PUBLICATION FEE DUE	PREV. PAID ISSUE FEE	TOTAL FEE(S) DUE	DATE DUE
nonprovisional	SMALL	$480	$0	$0	$480	01/05/2016

THE APPLICATION IDENTIFIED ABOVE HAS BEEN EXAMINED AND IS ALLOWED FOR ISSUANCE AS A PATENT. PROSECUTION ON THE MERITS IS CLOSED. THIS NOTICE OF ALLOWANCE IS NOT A GRANT OF PATENT RIGHTS. THIS APPLICATION IS SUBJECT TO WITHDRAWAL FROM ISSUE AT THE INITIATIVE OF THE OFFICE OR UPON PETITION BY THE APPLICANT. SEE 37 CFR 1.313 AND MPEP 1308.

THE ISSUE FEE AND PUBLICATION FEE (IF REQUIRED) MUST BE PAID WITHIN THREE MONTHS FROM THE MAILING DATE OF THIS NOTICE OR THIS APPLICATION SHALL BE REGARDED AS ABANDONED. THIS STATUTORY PERIOD CANNOT BE EXTENDED. SEE 35 U.S.C. 151. THE ISSUE FEE DUE INDICATED ABOVE DOES NOT REFLECT A CREDIT FOR ANY PREVIOUSLY PAID ISSUE FEE IN THIS APPLICATION. IF AN ISSUE FEE HAS PREVIOUSLY BEEN PAID IN THIS APPLICATION (AS SHOWN ABOVE), THE RETURN OF PART B OF THIS FORM WILL BE CONSIDERED A REQUEST TO REAPPLY THE PREVIOUSLY PAID ISSUE FEE TOWARD THE ISSUE FEE NOW DUE.

HOW TO REPLY TO THIS NOTICE:

I. Review the ENTITY STATUS shown above. If the ENTITY STATUS is shown as SMALL or MICRO, verify whether entitlement to that entity status still applies.

If the ENTITY STATUS is the same as shown above, pay the TOTAL FEE(S) DUE shown above.

If the ENTITY STATUS is changed from that shown above, on PART B - FEE(S) TRANSMITTAL, complete section number 5 titled "Change in Entity Status (from status indicated above)".

For purposes of this notice, small entity fees are 1/2 the amount of undiscounted fees, and micro entity fees are 1/2 the amount of small entity fees.

II. PART B - FEE(S) TRANSMITTAL, or its equivalent, must be completed and returned to the United States Patent and Trademark Office (USPTO) with your ISSUE FEE and PUBLICATION FEE (if required). If you are charging the fee(s) to your deposit account, section "4b" of Part B - Fee(s) Transmittal should be completed and an extra copy of the form should be submitted. If an equivalent of Part B is filed, a request to reapply a previously paid issue fee must be clearly made, and delays in processing may occur due to the difficulty in recognizing the paper as an equivalent of Part B.

III. All communications regarding this application must give the application number. Please direct all communications prior to issuance to Mail Stop ISSUE FEE unless advised to the contrary.

IMPORTANT REMINDER: Utility patents issuing on applications filed on or after Dec. 12, 1980 may require payment of maintenance fees. It is patentee's responsibility to ensure timely payment of maintenance fees when due.

PART B - FEE(S) TRANSMITTAL

Complete and send this form, together with applicable fee(s), to: Mail **Mail Stop ISSUE FEE**
Commissioner for Patents
P.O. Box 1450
Alexandria, Virginia 22313-1450
or Fax (571)-273-2885

INSTRUCTIONS: This form should be used for transmitting the ISSUE FEE and PUBLICATION FEE (if required). Blocks 1 through 5 should be completed where appropriate. All further correspondence including the Patent, advance orders and notification of maintenance fees will be mailed to the current correspondence address as indicated unless corrected below or directed otherwise in Block 1, by (a) specifying a new correspondence address; and/or (b) indicating a separate "FEE ADDRESS" for maintenance fee notifications.

CURRENT CORRESPONDENCE ADDRESS (Note: Use Block 1 for any change of address)

23446 7590 10/05/2015
MCANDREWS HELD & MALLOY, LTD
500 WEST MADISON STREET
SUITE 3400
CHICAGO, IL 60661

Note: A certificate of mailing can only be used for domestic mailings of the Fee(s) Transmittal. This certificate cannot be used for any other accompanying papers. Each additional paper, such as an assignment or formal drawing, must have its own certificate of mailing or transmission.

Certificate of Mailing or Transmission
I hereby certify that this Fee(s) Transmittal is being deposited with the United States Postal Service with sufficient postage for first class mail in an envelope addressed to the Mail Stop ISSUE FEE address above, or being facsimile transmitted to the USPTO (571) 273-2885, on the date indicated below.

(Depositor's name)
(Signature)
(Date)

APPLICATION NO.	FILING DATE	FIRST NAMED INVENTOR	ATTORNEY DOCKET NO.	CONFIRMATION NO.
14/614,543	02/05/2015	Madhukar Reddy	28427US04	5785

TITLE OF INVENTION: WIDEBAND TUNER ARCHITECTURE

APPLN. TYPE	ENTITY STATUS	ISSUE FEE DUE	PUBLICATION FEE DUE	PREV. PAID ISSUE FEE	TOTAL FEE(S) DUE	DATE DUE
nonprovisional	SMALL	$480	$0	$0	$480	01/05/2016

EXAMINER	ART UNIT	CLASS-SUBCLASS
JACKSON, BLANE J	2649	455-207000

1. Change of correspondence address or indication of "Fee Address" (37 CFR 1.363).
- ❑ Change of correspondence address (or Change of Correspondence Address form PTO/SB/122) attached.
- ❑ "Fee Address" indication (or "Fee Address" Indication form PTO/SB/47; Rev 03-02 or more recent) attached. **Use of a Customer Number is required.**

2. For printing on the patent front page, list
(1) The names of up to 3 registered patent attorneys or agents OR, alternatively,
(2) The name of a single firm (having as a member a registered attorney or agent) and the names of up to 2 registered patent attorneys or agents. If no name is listed, no name will be printed.

1 _____
2 _____
3 _____

3. ASSIGNEE NAME AND RESIDENCE DATA TO BE PRINTED ON THE PATENT (print or type)

PLEASE NOTE: Unless an assignee is identified below, no assignee data will appear on the patent. If an assignee is identified below, the document has been filed for recordation as set forth in 37 CFR 3.11. Completion of this form is NOT a substitute for filing an assignment.

(A) NAME OF ASSIGNEE (B) RESIDENCE: (CITY and STATE OR COUNTRY)

Please check the appropriate assignee category or categories (will not be printed on the patent) : ❑ Individual ❑ Corporation or other private group entity ❑ Government

4a. The following fee(s) are submitted:
- ❑ Issue Fee
- ❑ Publication Fee (No small entity discount permitted)
- ❑ Advance Order - # of Copies _____

4b. Payment of Fee(s): **(Please first reapply any previously paid issue fee shown above)**
- ❑ A check is enclosed.
- ❑ Payment by credit card. Form PTO-2038 is attached.
- ❑ The director is hereby authorized to charge the required fee(s), any deficiency, or credits any overpayment, to Deposit Account Number _____ (enclose an extra copy of this form).

5. **Change in Entity Status** (from status indicated above)
- ❑ Applicant certifying micro entity status. See 37 CFR 1.29 — NOTE: Absent a valid certification of Micro Entity Status (see forms PTO/SB/15A and 15B), issue fee payment in the micro entity amount will not be accepted at the risk of application abandonment.
- ❑ Applicant asserting small entity status. See 37 CFR 1.27 — NOTE: If the application was previously under micro entity status, checking this box will be taken to be a notification of loss of entitlement to micro entity status.
- ❑ Applicant changing to regular undiscounted fee status. — NOTE: Checking this box will be taken to be a notification of loss of entitlement to small or micro entity status, as applicable.

NOTE: This form must be signed in accordance with 37 CFR 1.31 and 1.33. See 37 CFR 1.4 for signature requirements and certifications.

Authorized Signature _____ Date _____

Typed or printed name _____ Registration No. _____

PTOL-85 Part B (10-13) Approved for use through 10/31/2013. OMB 0651-0033 U.S. Patent and Trademark Office; U.S. DEPARTMENT OF COMMERCE

UNITED STATES PATENT AND TRADEMARK OFFICE

UNITED STATES DEPARTMENT OF COMMERCE
United States Patent and Trademark Office
Address: COMMISSIONER FOR PATENTS
P.O. Box 1450
Alexandria, Virginia 22313-1450
www.uspto.gov

APPLICATION NO.	FILING DATE	FIRST NAMED INVENTOR	ATTORNEY DOCKET NO.	CONFIRMATION NO.
14/614,543	02/05/2015	Madhukar Reddy	28427US04	5785

23446 7590 10/05/2015
MCANDREWS HELD & MALLOY, LTD
500 WEST MADISON STREET
SUITE 3400
CHICAGO, IL 60661

EXAMINER
JACKSON, BLANE J

ART UNIT	PAPER NUMBER
2649	

DATE MAILED: 10/05/2015

Determination of Patent Term Adjustment under 35 U.S.C. 154 (b)
(Applications filed on or after May 29, 2000)

The Office has discontinued providing a Patent Term Adjustment (PTA) calculation with the Notice of Allowance.

Section 1(h)(2) of the AIA Technical Corrections Act amended 35 U.S.C. 154(b)(3)(B)(i) to eliminate the requirement that the Office provide a patent term adjustment determination with the notice of allowance. See Revisions to Patent Term Adjustment, 78 Fed. Reg. 19416, 19417 (Apr. 1, 2013). Therefore, the Office is no longer providing an initial patent term adjustment determination with the notice of allowance. The Office will continue to provide a patent term adjustment determination with the Issue Notification Letter that is mailed to applicant approximately three weeks prior to the issue date of the patent, and will include the patent term adjustment on the patent. Any request for reconsideration of the patent term adjustment determination (or reinstatement of patent term adjustment) should follow the process outlined in 37 CFR 1.705.

Any questions regarding the Patent Term Extension or Adjustment determination should be directed to the Office of Patent Legal Administration at (571)-272-7702. Questions relating to issue and publication fee payments should be directed to the Customer Service Center of the Office of Patent Publication at 1-(888)-786-0101 or (571)-272-4200.

OMB Clearance and PRA Burden Statement for PTOL-85 Part B

The Paperwork Reduction Act (PRA) of 1995 requires Federal agencies to obtain Office of Management and Budget approval before requesting most types of information from the public. When OMB approves an agency request to collect information from the public, OMB (i) provides a valid OMB Control Number and expiration date for the agency to display on the instrument that will be used to collect the information and (ii) requires the agency to inform the public about the OMB Control Number's legal significance in accordance with 5 CFR 1320.5(b).

The information collected by PTOL-85 Part B is required by 37 CFR 1.311. The information is required to obtain or retain a benefit by the public which is to file (and by the USPTO to process) an application. Confidentiality is governed by 35 U.S.C. 122 and 37 CFR 1.14. This collection is estimated to take 12 minutes to complete, including gathering, preparing, and submitting the completed application form to the USPTO. Time will vary depending upon the individual case. Any comments on the amount of time you require to complete this form and/or suggestions for reducing this burden, should be sent to the Chief Information Officer, U.S. Patent and Trademark Office, U.S. Department of Commerce, P.O. Box 1450, Alexandria, Virginia 22313-1450. DO NOT SEND FEES OR COMPLETED FORMS TO THIS ADDRESS. SEND TO: Commissioner for Patents, P.O. Box 1450, Alexandria, Virginia 22313-1450. Under the Paperwork Reduction Act of 1995, no persons are required to respond to a collection of information unless it displays a valid OMB control number.

Privacy Act Statement

The Privacy Act of 1974 (P.L. 93-579) requires that you be given certain information in connection with your submission of the attached form related to a patent application or patent. Accordingly, pursuant to the requirements of the Act, please be advised that: (1) the general authority for the collection of this information is 35 U.S.C. 2(b)(2); (2) furnishing of the information solicited is voluntary; and (3) the principal purpose for which the information is used by the U.S. Patent and Trademark Office is to process and/or examine your submission related to a patent application or patent. If you do not furnish the requested information, the U.S. Patent and Trademark Office may not be able to process and/or examine your submission, which may result in termination of proceedings or abandonment of the application or expiration of the patent.

The information provided by you in this form will be subject to the following routine uses:

1. The information on this form will be treated confidentially to the extent allowed under the Freedom of Information Act (5 U.S.C. 552) and the Privacy Act (5 U.S.C 552a). Records from this system of records may be disclosed to the Department of Justice to determine whether disclosure of these records is required by the Freedom of Information Act.
2. A record from this system of records may be disclosed, as a routine use, in the course of presenting evidence to a court, magistrate, or administrative tribunal, including disclosures to opposing counsel in the course of settlement negotiations.
3. A record in this system of records may be disclosed, as a routine use, to a Member of Congress submitting a request involving an individual, to whom the record pertains, when the individual has requested assistance from the Member with respect to the subject matter of the record.
4. A record in this system of records may be disclosed, as a routine use, to a contractor of the Agency having need for the information in order to perform a contract. Recipients of information shall be required to comply with the requirements of the Privacy Act of 1974, as amended, pursuant to 5 U.S.C. 552a(m).
5. A record related to an International Application filed under the Patent Cooperation Treaty in this system of records may be disclosed, as a routine use, to the International Bureau of the World Intellectual Property Organization, pursuant to the Patent Cooperation Treaty.
6. A record in this system of records may be disclosed, as a routine use, to another federal agency for purposes of National Security review (35 U.S.C. 181) and for review pursuant to the Atomic Energy Act (42 U.S.C. 218(c)).
7. A record from this system of records may be disclosed, as a routine use, to the Administrator, General Services, or his/her designee, during an inspection of records conducted by GSA as part of that agency's responsibility to recommend improvements in records management practices and programs, under authority of 44 U.S.C. 2904 and 2906. Such disclosure shall be made in accordance with the GSA regulations governing inspection of records for this purpose, and any other relevant (i.e., GSA or Commerce) directive. Such disclosure shall not be used to make determinations about individuals.
8. A record from this system of records may be disclosed, as a routine use, to the public after either publication of the application pursuant to 35 U.S.C. 122(b) or issuance of a patent pursuant to 35 U.S.C. 151. Further, a record may be disclosed, subject to the limitations of 37 CFR 1.14, as a routine use, to the public if the record was filed in an application which became abandoned or in which the proceedings were terminated and which application is referenced by either a published application, an application open to public inspection or an issued patent.
9. A record from this system of records may be disclosed, as a routine use, to a Federal, State, or local law enforcement agency, if the USPTO becomes aware of a violation or potential violation of law or regulation.

Notice of Allowability	Application No. 14/614,543	Applicant(s) REDDY ET AL.	
	Examiner BLANE J. JACKSON	Art Unit 2649	AIA (First Inventor to File) Status No

-- The MAILING DATE of this communication appears on the cover sheet with the correspondence address--

All claims being allowable, PROSECUTION ON THE MERITS IS (OR REMAINS) CLOSED in this application. If not included herewith (or previously mailed), a Notice of Allowance (PTOL-85) or other appropriate communication will be mailed in due course. **THIS NOTICE OF ALLOWABILITY IS NOT A GRANT OF PATENT RIGHTS.** This application is subject to withdrawal from issue at the initiative of the Office or upon petition by the applicant. See 37 CFR 1.313 and MPEP 1308.

1. ☒ This communication is responsive to *the RCE filed 11 September 2015*.
   ☐ A declaration(s)/affidavit(s) under **37 CFR 1.130(b)** was/were filed on_____.
2. ☐ An election was made by the applicant in response to a restriction requirement set forth during the interview on _____; the restriction requirement and election have been incorporated into this action.
3. ☒ The allowed claim(s) is/are *1-20*. As a result of the allowed claim(s), you may be eligible to benefit from the **Patent Prosecution Highway** program at a participating intellectual property office for the corresponding application. For more information, please see http://www.uspto.gov/patents/init_events/pph/index.jsp or send an inquiry to PPHfeedback@uspto.gov .
4. ☐ Acknowledgment is made of a claim for foreign priority under 35 U.S.C. § 119(a)-(d) or (f).

   Certified copies:

   a) ☐ All b) ☐ Some *c) ☐ None of the:
   1. ☐ Certified copies of the priority documents have been received.
   2. ☐ Certified copies of the priority documents have been received in Application No. _____ .
   3. ☐ Copies of the certified copies of the priority documents have been received in this national stage application from the International Bureau (PCT Rule 17.2(a)).

   * Certified copies not received: _____.

Applicant has THREE MONTHS FROM THE "MAILING DATE" of this communication to file a reply complying with the requirements noted below. Failure to timely comply will result in ABANDONMENT of this application.
THIS THREE-MONTH PERIOD IS NOT EXTENDABLE.

5. ☐ CORRECTED DRAWINGS (as "replacement sheets") must be submitted.
   ☐ including changes required by the attached Examiner's Amendment / Comment or in the Office action of Paper No./Mail Date _____.

   Identifying indicia such as the application number (see 37 CFR 1.84(c)) should be written on the drawings in the front (not the back) of each sheet. Replacement sheet(s) should be labeled as such in the header according to 37 CFR 1.121(d).
6. ☐ DEPOSIT OF and/or INFORMATION about the deposit of BIOLOGICAL MATERIAL must be submitted. Note the attached Examiner's comment regarding REQUIREMENT FOR THE DEPOSIT OF BIOLOGICAL MATERIAL.

Attachment(s)

1. ☐ Notice of References Cited (PTO-892)
2. ☒ Information Disclosure Statements (PTO/SB/08), Paper No./Mail Date _____
3. ☐ Examiner's Comment Regarding Requirement for Deposit of Biological Material
4. ☐ Interview Summary (PTO-413), Paper No./Mail Date _____ .
5. ☐ Examiner's Amendment/Comment
6. ☒ Examiner's Statement of Reasons for Allowance
7. ☐ Other _____.

DETAILED ACTION

The present application is being examined under the pre-AIA first to invent provisions.

Continued Examination Under 37 CFR 1.114

A request for continued examination under 37 CFR 1.114, including the fee set forth in 37 CFR 1.17(e), was filed in this application after allowance or after an Office action under *Ex Parte Quayle*, 25 USPQ 74, 453 O.G. 213 (Comm'r Pat. 1935). Since this application is eligible for continued examination under 37 CFR 1.114, and the fee set forth in 37 CFR 1.17(e) has been timely paid, prosecution in this application has been reopened pursuant to 37 CFR 1.114. Applicant's submission filed on 11 September 2015 has been entered.

Information Disclosure Statement

The Information Disclosure Statement filed 11 September 2015 is made of record.

Allowable Subject Matter

Claims 1-20 are allowed. The following is a statement of reasons for the indication of allowable subject matter: the Information Disclosure Statement filed with the RCE on 11 September 2015 did not present prior art that comprises the inventive claimed subject matter.

Conclusion

Any inquiry concerning this communication or earlier communications from the examiner should be directed to BLANE J. JACKSON whose telephone number is (571)272-7890. The examiner can normally be reached on Monday through Friday, 8:30 AM-5:30 PM, EST.

If attempts to reach the examiner by telephone are unsuccessful, the examiner's supervisor, Edward Urban can be reached on (571) 272-7899. The fax phone number for the organization where this application or proceeding is assigned is 571-273-8300.

Information regarding the status of an application may be obtained from the Patent Application Information Retrieval (PAIR) system. Status information for published applications may be obtained from either Private PAIR or Public PAIR. Status information for unpublished applications is available through Private PAIR only. For more information about the PAIR system, see http://pair-direct.uspto.gov. Should you have questions on access to the Private PAIR system, contact the Electronic Business Center (EBC) at 866-217-9197 (toll-free). If you would like assistance from a USPTO Customer Service Representative or access to the automated information system, call 800-786-9199 (IN USA OR CANADA) or 571-272-1000.

/BLANE J JACKSON/
Primary Examiner, Art Unit 2649

EAST Search History

EAST Search History (Prior Art)

Ref #	Hits	Search Query	DBs	Default Operator	Plurals	Time Stamp
L1	2	"6992855".pn.	US-PGPUB; USPAT; USOCR; FPRS; EPO; JPO; DERWENT; IBM_TDB	OR	ON	2015/09/16 11:35
L2	3	"7095454".pn.	US-PGPUB; USPAT; USOCR; FPRS; EPO; JPO; DERWENT; IBM_TDB	OR	ON	2015/09/16 11:36
L3	3	"7167694".pn.	US-PGPUB; USPAT; USOCR; FPRS; EPO; JPO; DERWENT; IBM_TDB	OR	ON	2015/09/16 11:37
L4	2	"7362178".pn.	US-PGPUB; USPAT; USOCR; FPRS; EPO; JPO; DERWENT; IBM_TDB	OR	ON	2015/09/16 11:40
L5	2	"7373125".pn.	US-PGPUB; USPAT; USOCR; FPRS; EPO; JPO; DERWENT; IBM_TDB	OR	ON	2015/09/16 11:41
L6	2	"7421259".pn.	US-PGPUB; USPAT; USOCR; FPRS; EPO; JPO; DERWENT; IBM_TDB	OR	ON	2015/09/16 11:44
L7	3	"8285240".pn.	US-PGPUB; USPAT; USOCR; FPRS; EPO; JPO; DERWENT; IBM_TDB	OR	ON	2015/09/16 11:45
L8	2	"8374568".pn.	US-PGPUB; USPAT; USOCR; FPRS; EPO; JPO; DERWENT; IBM_TDB	OR	ON	2015/09/16 12:01
L9	2	"8374569".pn.	US-PGPUB; USPAT; USOCR; FPRS; EPO; JPO; DERWENT; IBM_TDB	OR	ON	2015/09/16 12:02
L10	2	"8374570".pn.	US-PGPUB; USPAT; USOCR; FPRS; EPO; JPO; DERWENT; IBM_TDB	OR	ON	2015/09/16 12:02
L11	4	"8526898".pn.	US-PGPUB; USPAT; USOCR; FPRS; EPO; JPO; DERWENT; IBM_TDB	OR	ON	2015/09/16 12:03
L12	2	"8577319".pn.	US-PGPUB; USPAT; USOCR; FPRS; EPO; JPO; DERWENT; IBM_TDB	OR	ON	2015/09/16 12:03
L13	3	"8666350".pn.	US-PGPUB; USPAT; USOCR; FPRS; EPO; JPO; DERWENT; IBM_TDB	OR	ON	2015/09/16 12:04
L14	7	"8909187".pn.	US-PGPUB; USPAT; USOCR; FPRS; EPO; JPO; DERWENT; IBM_TDB	OR	ON	2015/09/16 12:05
L15	3	"9059672".pn.	US-PGPUB; USPAT; USOCR; FPRS; EPO; JPO; DERWENT; IBM_TDB	OR	ON	2015/09/16 12:05
L16	4	"20070042742"	US-PGPUB; USPAT; USOCR; FPRS; EPO; JPO; DERWENT; IBM_TDB	OR	ON	2015/09/16 12:06
L17	42	Reddy-Madhukar.in.	US-PGPUB; USPAT; USOCR; FPRS; EPO; JPO; DERWENT; IBM_TDB	OR	ON	2015/09/16 12:07
S1	7	"6906498".pn.	US-PGPUB; USPAT; USOCR; FPRS; EPO; JPO; DERWENT; IBM_TDB	OR	ON	2015/09/16 09:24

9/16/2015 12:08:42 PM

Issue Classification	Application/Control No.	Applicant(s)/Patent Under Reexamination
	14614543	REDDY ET AL.
	Examiner	**Art Unit**
	BLANE J JACKSON	2649

CPC						
Symbol					**Type**	**Version**
H04N		5	/	50	F	2013-01-01
H04B		1	/	0014	I	2013-01-01
H04N		21	/	4263	I	2013-01-01
H04N		21	/	4383	I	2013-01-01
H04N		21	/	454	I	2013-01-01
H04N		21	/	6193	I	2013-01-01
			/			
			/			
			/			
			/			
			/			
			/			
			/			
			/			
			/			

CPC Combination Sets								
Symbol					**Type**	**Set**	**Ranking**	**Version**
			/					
			/					

NONE (Assistant Examiner)	(Date)	**Total Claims Allowed:** 20	
/BLANE J JACKSON/ Primary Examiner.Art Unit 2649 (Primary Examiner)	09/16/15 (Date)	O.G. Print Claim(s) 1	O.G. Print Figure 4

U.S. Patent and Trademark Office

Part of Paper No. 20150916

Issue Classification	Application/Control No.	Applicant(s)/Patent Under Reexamination
	14614543	REDDY ET AL.
	Examiner	**Art Unit**
	BLANE J JACKSON	2649

US ORIGINAL CLASSIFICATION		INTERNATIONAL CLASSIFICATION	
CLASS	SUBCLASS	CLAIMED	NON-CLAIMED
455	207	H 0 4 B 1 / 16 (2006.01.01)	

CROSS REFERENCE(S)					
CLASS	SUBCLASS (ONE SUBCLASS PER BLOCK)				
455	214				

NONE (Assistant Examiner)	(Date)	**Total Claims Allowed:** 20	
/BLANE J JACKSON/ Primary Examiner.Art Unit 2649 (Primary Examiner)	09/16/15 (Date)	O.G. Print Claim(s) 1	O.G. Print Figure 4

U.S. Patent and Trademark Office

Part of Paper No. 20150916

Issue Classification	Application/Control No.	Applicant(s)/Patent Under Reexamination
	14614543	REDDY ET AL.
	Examiner	**Art Unit**
	BLANE J JACKSON	2649

☒ **Claims renumbered in the same order as presented by applicant** ☐ **CPA** ☐ **T.D.** ☐ **R.1.47**

Final	Original	Final	Original	Final	Original	Final	Original	Final	Original	Final	Original	Final	Original	Final	Original
1	1	17	17												
2	2	18	18												
3	3	19	19												
4	4	20	20												
5	5														
6	6														
7	7														
8	8														
9	9														
10	10														
11	11														
12	12														
13	13														
14	14														
15	15														
16	16														

NONE (Assistant Examiner)	(Date)	**Total Claims Allowed:** 20	
/BLANE J JACKSON/ Primary Examiner.Art Unit 2649 (Primary Examiner)	09/16/15 (Date)	O.G. Print Claim(s) 1	O.G. Print Figure 4

U.S. Patent and Trademark Office

Part of Paper No. 20150916

Search Notes	Application/Control No.	Applicant(s)/Patent Under Reexamination
	14614543	REDDY ET AL.
	Examiner	**Art Unit**
	BLANE J JACKSON	2649

CPC- SEARCHED

Symbol	Date	Examiner

CPC COMBINATION SETS - SEARCHED

Symbol	Date	Examiner
H04B 1/16	05/08/15	BJJ

US CLASSIFICATION SEARCHED

Class	Subclass	Date	Examiner
455	131, 140, 207, 214, 313, 315, 323, 324, 325, 334	05/08/15	BJJ

SEARCH NOTES

Search Notes	Date	Examiner
Review of IDS; review of prior art and similar application 14/617,973 to FAOM	05/08/15	BJJ
update search; review of TD to issue	07/30/15	BJJ
The IDS filed with the RCE was reviewed to issue	09/16/15	BJJ

INTERFERENCE SEARCH

US Class/ CPC Symbol	US Subclass / CPC Group	Date	Examiner
	no interference listed class/ subclass or symbol/ group	09/16/15	BJJ

PTO/SB/08a (01-10)
Approved for use through 07/31/2012. OMB 0651-0031
U.S. Patent and Trademark Office; U.S. DEPARTMENT OF COMMERCE
Under the Paperwork Reduction Act of 1995, no persons are required to respond to a collection of information unless it contains a valid OMB control number.

INFORMATION DISCLOSURE STATEMENT BY APPLICANT (Not for submission under 37 CFR 1.99)		
	Application Number	14614543
	Filing Date	2015-02-05
	First Named Inventor	Madhukar Reddy
	Art Unit	2649
	Examiner Name	JACKSON, Blane J.
	Attorney Docket Number	28427US04

U.S.PATENTS						Remove
Examiner Initial*	Cite No	Patent Number	Kind Code[1]	Issue Date	Name of Patentee or Applicant of cited Document	Pages,Columns,Lines where Relevant Passages or Relevant Figures Appear
/B.J./	1	6906498		2005-06-14	Breuch et al.	
/B.J./	2	6992855		2006-01-31	Ehrlich	
/B.J./	3	7095454		2006-08-22	Waight et al.	
/B.J./	4	7167694		2007-01-23	Khoini-Poorfard et al.	
/B.J./	5	7362178		2008-04-22	Montemayor et al.	
/B.J./	6	7373125		2008-05-13	Godambe et al.	
/B.J./	7	7421259		2008-09-02	Gomez et al.	
/B.J./	8	8285240		2012-10-09	Seendripu et al.	

INFORMATION DISCLOSURE STATEMENT BY APPLICANT (Not for submission under 37 CFR 1.99)		
	Application Number	14614543 14614543 - GAU: 2649
	Filing Date	2015-02-05
	First Named Inventor	Madhukar Reddy
	Art Unit	2649
	Examiner Name	JACKSON, Blane J.
	Attorney Docket Number	28427US04

/B.J./	9	8374568		2013-02-12	Seendripu et al.	
/B.J./	10	8374569		2013-02-12	Seendripu et al.	
/B.J./	11	8374570		2013-02-12	Seendripu et al.	
/B.J./	12	8526898		2013-09-03	Reddy et al.	
/B.J./	13	8577319		2013-11-05	Ling et al.	
/B.J./	14	8666350		2014-03-04	Vauhkonen	
/B.J./	15	8909187		2014-12-09	Seendripu et al.	
/B.J./	16	9059672		2015-06-16	Ling et al.	

If you wish to add additional U.S. Patent citation information please click the Add button. Add

U.S.PATENT APPLICATION PUBLICATIONS Remove

Examiner Initial*	Cite No	Publication Number	Kind Code[1]	Publication Date	Name of Patentee or Applicant of cited Document	Pages,Columns,Lines where Relevant Passages or Relevant Figures Appear
/B.J./	1	20050040909	A1	2005-02-24	Waight et al.	

EFS Web 2.1.17

INFORMATION DISCLOSURE STATEMENT BY APPLICANT (Not for submission under 37 CFR 1.99)	Application Number	14614543 14614543 - GAU: 2649
	Filing Date	2015-02-05
	First Named Inventor	Madhukar Reddy
	Art Unit	2649
	Examiner Name	JACKSON, Blane J.
	Attorney Docket Number	28427US04

/B.J./	2	20070042742	A1	2007-02-22	Kim et al.	

If you wish to add additional U.S. Published Application citation information please click the Add button. Add

FOREIGN PATENT DOCUMENTS Remove

Examiner Initial*	Cite No	Foreign Document Number[3]	Country Code[2] i	Kind Code[4]	Publication Date	Name of Patentee or Applicant of cited Document	Pages,Columns,Lines where Relevant Passages or Relevant Figures Appear	T[5]
	1							☐

If you wish to add additional Foreign Patent Document citation information please click the Add button Add

NON-PATENT LITERATURE DOCUMENTS Remove

Examiner Initials*	Cite No	Include name of the author (in CAPITAL LETTERS), title of the article (when appropriate), title of the item (book, magazine, journal, serial, symposium, catalog, etc), date, pages(s), volume-issue number(s), publisher, city and/or country where published.	T[5]
/B.J./	1	JEFFREY A. WELDON, et al. "A 1.75-GHz Highly Integrated Narrow-Band CMOS Transmitter With Harmonic-Rejection Mixers, IEEE Journal of Solid-State Circuits, December 2001, pages: 2003-2015, Vol. 36, No. 12, Seattle, Washington.	☐

If you wish to add additional non-patent literature document citation information please click the Add button Add

EXAMINER SIGNATURE

Examiner Signature	/Blane Jackson/	Date Considered	09/16/2015

*EXAMINER: Initial if reference considered, whether or not citation is in conformance with MPEP 609. Draw line through a citation if not in conformance and not considered. Include copy of this form with next communication to applicant.

[1] See Kind Codes of USPTO Patent Documents at www.USPTO.GOV or MPEP 901.04. [2] Enter office that issued the document, by the two-letter code (WIPO Standard ST.3). [3] For Japanese patent documents, the indication of the year of the reign of the Emperor must precede the serial number of the patent document. [4] Kind of document by the appropriate symbols as indicated on the document under WIPO Standard ST.16 if possible. [5] Applicant is to place a check mark here if English language translation is attached.

INFORMATION DISCLOSURE STATEMENT BY APPLICANT (Not for submission under 37 CFR 1.99)		
	Application Number	14614543 14614543 - GAU: 2649
	Filing Date	2015-02-05
	First Named Inventor	Madhukar Reddy
	Art Unit	2649
	Examiner Name	JACKSON, Blane J.
	Attorney Docket Number	28427US04

CERTIFICATION STATEMENT

Please see 37 CFR 1.97 and 1.98 to make the appropriate selection(s):

☐ That each item of information contained in the information disclosure statement was first cited in any communication from a foreign patent office in a counterpart foreign application not more than three months prior to the filing of the information disclosure statement. See 37 CFR 1.97(e)(1).

OR

☐ That no item of information contained in the information disclosure statement was cited in a communication from a foreign patent office in a counterpart foreign application, and, to the knowledge of the person signing the certification after making reasonable inquiry, no item of information contained in the information disclosure statement was known to any individual designated in 37 CFR 1.56(c) more than three months prior to the filing of the information disclosure statement. See 37 CFR 1.97(e)(2).

☐ See attached certification statement.

☐ The fee set forth in 37 CFR 1.17 (p) has been submitted herewith.

☒ A certification statement is not submitted herewith.

SIGNATURE

A signature of the applicant or representative is required in accordance with CFR 1.33, 10.18. Please see CFR 1.4(d) for the form of the signature.

Signature	/Chad M. Gilles/	Date (YYYY-MM-DD)	2015-09-11
Name/Print	Chad M. Gilles	Registration Number	60590

This collection of information is required by 37 CFR 1.97 and 1.98. The information is required to obtain or retain a benefit by the public which is to file (and by the USPTO to process) an application. Confidentiality is governed by 35 U.S.C. 122 and 37 CFR 1.14. This collection is estimated to take 1 hour to complete, including gathering, preparing and submitting the completed application form to the USPTO. Time will vary depending upon the individual case. Any comments on the amount of time you require to complete this form and/or suggestions for reducing this burden, should be sent to the Chief Information Officer, U.S. Patent and Trademark Office, U.S. Department of Commerce, P.O. Box 1450, Alexandria, VA 22313-1450. DO NOT SEND FEES OR COMPLETED FORMS TO THIS ADDRESS. **SEND TO: Commissioner for Patents, P.O. Box 1450, Alexandria, VA 22313-1450.**

Privacy Act Statement

The Privacy Act of 1974 (P.L. 93-579) requires that you be given certain information in connection with your submission of the attached form related to a patent application or patent. Accordingly, pursuant to the requirements of the Act, please be advised that: (1) the general authority for the collection of this information is 35 U.S.C. 2(b)(2); (2) furnishing of the information solicited is voluntary; and (3) the principal purpose for which the information is used by the U.S. Patent and Trademark Office is to process and/or examine your submission related to a patent application or patent. If you do not furnish the requested information, the U.S. Patent and Trademark Office may not be able to process and/or examine your submission, which may result in termination of proceedings or abandonment of the application or expiration of the patent.

The information provided by you in this form will be subject to the following routine uses:

1. The information on this form will be treated confidentially to the extent allowed under the Freedom of Information Act (5 U.S.C. 552) and the Privacy Act (5 U.S.C. 552a). Records from this system of records may be disclosed to the Department of Justice to determine whether the Freedom of Information Act requires disclosure of these record s.

2. A record from this system of records may be disclosed, as a routine use, in the course of presenting evidence to a court, magistrate, or administrative tribunal, including disclosures to opposing counsel in the course of settlement negotiations.

3. A record in this system of records may be disclosed, as a routine use, to a Member of Congress submitting a request involving an individual, to whom the record pertains, when the individual has requested assistance from the Member with respect to the subject matter of the record.

4. A record in this system of records may be disclosed, as a routine use, to a contractor of the Agency having need for the information in order to perform a contract. Recipients of information shall be required to comply with the requirements of the Privacy Act of 1974, as amended, pursuant to 5 U.S.C. 552a(m).

5. A record related to an International Application filed under the Patent Cooperation Treaty in this system of records may be disclosed, as a routine use, to the International Bureau of the World Intellectual Property Organization, pursuant to the Patent Cooperation Treaty.

6. A record in this system of records may be disclosed, as a routine use, to another federal agency for purposes of National Security review (35 U.S.C. 181) and for review pursuant to the Atomic Energy Act (42 U.S.C. 218(c)).

7. A record from this system of records may be disclosed, as a routine use, to the Administrator, General Services, or his/her designee, during an inspection of records conducted by GSA as part of that agency's responsibility to recommend improvements in records management practices and programs, under authority of 44 U.S.C. 2904 and 2906. Such disclosure shall be made in accordance with the GSA regulations governing inspection of records for this purpose, and any other relevant (i.e., GSA or Commerce) directive. Such disclosure shall not be used to make determinations about individuals.

8. A record from this system of records may be disclosed, as a routine use, to the public after either publication of the application pursuant to 35 U.S.C. 122(b) or issuance of a patent pursuant to 35 U.S.C. 151. Further, a record may be disclosed, subject to the limitations of 37 CFR 1.14, as a routine use, to the public if the record was filed in an application which became abandoned or in which the proceedings were terminated and which application is referenced by either a published application, an application open to public inspections or an issued patent.

9. A record from this system of records may be disclosed, as a routine use, to a Federal, State, or local law enforcement agency, if the USPTO becomes aware of a violation or potential violation of law or regulation.

To: mhmpto@mcandrews-ip.com,,
From: PAIR_eOfficeAction@uspto.gov
Cc: PAIR_eOfficeAction@uspto.gov
Subject: Private PAIR Correspondence Notification for Customer Number 23446

Oct 05, 2015 05:53:10 AM

Dear PAIR Customer:

MCANDREWS HELD & MALLOY, LTD
500 WEST MADISON STREET
SUITE 3400
CHICAGO, IL 60661
UNITED STATES

The following USPTO patent application(s) associated with your Customer Number, 23446 , have new outgoing correspondence. This correspondence is now available for viewing in Private PAIR.

The official date of notification of the outgoing correspondence will be indicated on the form PTOL-90 accompanying the correspondence.

Disclaimer:
The list of documents shown below is provided as a courtesy and is not part of the official file wrapper. The content of the images shown in PAIR is the official record.

Application	Document	Mailroom Date	Attorney Docket No.
14614543	NOA	10/05/2015	28427US04
	1449	10/05/2015	28427US04

To view your correspondence online or update your email addresses, please visit us anytime at https://sportal.uspto.gov/secure/myportal/privatepair.

If you have any questions, please email the Electronic Business Center (EBC) at EBC@uspto.gov with 'e-Office Action' on the subject line or call 1-866-217-9197 during the following hours:

Monday - Friday 6:00 a.m. to 12:00 a.m.

Thank you for prompt attention to this notice,

UNITED STATES PATENT AND TRADEMARK OFFICE

PATENT APPLICATION INFORMATION RETRIEVAL SYSTEM

PART B - FEE(S) TRANSMITTAL

Complete and send this form, together with applicable fee(s), to: Mail **Mail Stop ISSUE FEE**
Commissioner for Patents
P.O. Box 1450
Alexandria, Virginia 22313-1450
or Fax (571)-273-2885

INSTRUCTIONS: This form should be used for transmitting the ISSUE FEE and PUBLICATION FEE (if required). Blocks 1 through 5 should be completed where appropriate. All further correspondence including the Patent, advance orders and notification of maintenance fees will be mailed to the current correspondence address as indicated unless corrected below or directed otherwise in Block 1, by (a) specifying a new correspondence address; and/or (b) indicating a separate "FEE ADDRESS" for maintenance fee notifications.

CURRENT CORRESPONDENCE ADDRESS (Note: Use Block 1 for any change of address)

23446 7590 10/05/2015
MCANDREWS HELD & MALLOY, LTD
500 WEST MADISON STREET
SUITE 3400
CHICAGO, IL 60661

Note: A certificate of mailing can only be used for domestic mailings of the Fee(s) Transmittal. This certificate cannot be used for any other accompanying papers. Each additional paper, such as an assignment or formal drawing, must have its own certificate of mailing or transmission.

Certificate of Mailing or Transmission via EFS
I hereby certify that this Fee(s) Transmittal is being deposited with the United States Postal Service with sufficient postage for first class mail in an envelope addressed to the Mail Stop ISSUE FEE address above, or being facsimile transmitted to the USPTO (571) 273-2885, on the date indicated below.

Chad M. Gilles	(Depositor's name)
/Chad M. Gilles/	(Signature)
October 26, 2015	(Date)

APPLICATION NO.	FILING DATE	FIRST NAMED INVENTOR	ATTORNEY DOCKET NO.	CONFIRMATION NO.
14/614,543	02/05/2015	Madhukar Reddy	28427US04	5785

TITLE OF INVENTION: WIDEBAND TUNER ARCHITECTURE

APPLN. TYPE	ENTITY STATUS	ISSUE FEE DUE	PUBLICATION FEE DUE	PREV. PAID ISSUE FEE	TOTAL FEE(S) DUE	DATE DUE
nonprovisional	SMALL	$480	$0	$0	$480	01/05/2016

EXAMINER	ART UNIT	CLASS-SUBCLASS
JACKSON, BLANE J	2649	455-207000

1. Change of correspondence address or indication of "Fee Address" (37 CFR 1.363).
- ☐ Change of correspondence address (or Change of Correspondence Address form PTO/SB/122) attached.
- ☐ "Fee Address" indication (or "Fee Address" Indication form PTO/SB/47; Rev 03-02 or more recent) attached. **Use of a Customer Number is required.**

2. For printing on the patent front page, list
(1) The names of up to 3 registered patent attorneys or agents OR, alternatively,
(2) The name of a single firm (having as a member a registered attorney or agent) and the names of up to 2 registered patent attorneys or agents. If no name is listed, no name will be printed.

1 McAndrews, Held & Malloy, Ltd.
2
3

3. ASSIGNEE NAME AND RESIDENCE DATA TO BE PRINTED ON THE PATENT (print or type)

PLEASE NOTE: Unless an assignee is identified below, no assignee data will appear on the patent. If an assignee is identified below, the document has been filed for recordation as set forth in 37 CFR 3.11. Completion of this form is NOT a substitute for filing an assignment.

(A) NAME OF ASSIGNEE: MaxLinear, Inc.
(B) RESIDENCE: (CITY and STATE OR COUNTRY): Carlsbad, CA

Please check the appropriate assignee category or categories (will not be printed on the patent): ☐ Individual ☒ Corporation or other private group entity ☐ Government

4a. The following fee(s) are submitted:
- ☒ Issue Fee
- ☐ Publication Fee (No small entity discount permitted)
- ☐ Advance Order - # of Copies _____

4b. Payment of Fee(s): **(Please first reapply any previously paid issue fee shown above)**
- ☐ A check is enclosed.
- ☒ Payment by credit card. Form PTO-2038 is attached.
- ☒ The director is hereby authorized to charge the required fee(s), any deficiency, or credits any overpayment, to Deposit Account Number 13-0017 (enclose an extra copy of this form).

5. **Change in Entity Status** (from status indicated above)
- ☐ Applicant certifying micro entity status. See 37 CFR 1.29 — NOTE: Absent a valid certification of Micro Entity Status (see forms PTO/SB/15A and 15B), issue fee payment in the micro entity amount will not be accepted at the risk of application abandonment.
- ☐ Applicant asserting small entity status. See 37 CFR 1.27 — NOTE: If the application was previously under micro entity status, checking this box will be taken to be a notification of loss of entitlement to micro entity status.
- ☐ Applicant changing to regular undiscounted fee status. — NOTE: Checking this box will be taken to be a notification of loss of entitlement to small or micro entity status, as applicable.

NOTE: This form must be signed in accordance with 37 CFR 1.31 and 1.33. See 37 CFR 1.4 for signature requirements and certifications.

Authorized Signature /Chad M. Gilles/ Date October 26, 2015

Typed or printed name Chad M. Gilles Registration No. 60,590

PTOL-85 Part B (10-13) Approved for use through 10/31/2013. OMB 0651-0033 U.S. Patent and Trademark Office; U.S. DEPARTMENT OF COMMERCE

IN THE UNITED STATES PATENT AND TRADEMARK OFFICE
(Attorney Docket No. 28427US04)

In the Application of:

Madhukar Reddy

Serial No.: 14/614,543

Filed: Feb 5, 2015

Title: WIDEBAND TUNER ARCHITECTURE

Confirmation No.: 5785

Customer No.: 23446

AMENDMENT UNDER 37 C.F.R. § 1.312

This paper is submitted concurrently with the issue fee and responds to the Notice of Allowance mailed Oct 5, 2015 in the above-identified application. Applicant respectfully requests entry of the following remarks in the record and entry of the following claim amendments pursuant to 37 C.F.R. § 1.312.

LISTING OF CLAIMS

1. (Original) A wideband receiver system comprising:

a mixer module configured to downconvert a plurality of frequencies that comprises a plurality of desired television channels and a plurality of undesired television channels;

a wideband analog-to-digital converter (ADC) module configured to digitize said plurality of frequencies comprising said plurality of desired television channels and said plurality of undesired television channels;

digital circuitry configured to:

select said plurality of desired television channels from said digitized plurality of frequencies; and

output said selected plurality of television channels to a demodulator as a digital datastream.

2. (Original) The wideband receiver system of claim 1, wherein said output of said digital datastream is via a serial interface.

3. (Original) The wideband receiver system of claim 1, wherein said output of said digital datastream is via a parallel interface.

4. (Original) The wideband receiver system of claim 1, wherein said mixer module comprises a first mixer configured to generate an in-phase signal and a second mixer configured to generate a quadrature signal.

5. (Currently Amended) The wideband receiver system of claim 1, wherein said [[a]] wideband analog-to-digital converter comprises:

a first ADC configured to generate a digital in-phase signal; and

a second ADC configured to generate a digital quadrature signal.

6. (Currently Amended) The wideband receiver system of claim 5, wherein said digital circuitry comprises a plurality of complex mixers configured to frequency shift said selected plurality of desired television channels.

7. (Currently Amended) The wideband receiver system f claim 6, wherein:

prior to said frequency shift, said selected plurality of desired television channels occupy non-contiguous portions of a frequency spectrum; and

after said frequency shift, said selected plurality of desired television channels occupy a contiguous frequency spectrum.

8. (Original) The wideband receiver system of claim 1, wherein said digital circuitry comprises a plurality of channel filters configured to perform said selection of said plurality of desired television channels.

9. (Original) The wideband receiver system of claim 8, wherein each one of said plurality of channel filters is a finite impulse response filter.

10. (Currently Amended) The wideband receiver system of claim 1, wherein said digital circuitry comprises a decimator circuit configured to decimate one or more of said selected plurality of television channels prior to said output of said selected plurality of desired television channels.

11. (Original) A method comprising:

in a wideband receiver system:

downconverting, by a mixer module of said wideband receiver system, a plurality of frequencies that comprises a plurality of desired television channels and a plurality of undesired television channels;

digitizing, by a wideband analog-to-digital converter (ADC) module of said wideband receiver system, said plurality of frequencies comprising said plurality of desired television channels and said plurality of undesired television channels;

selecting, by digital circuitry of said wideband receiver system, said plurality of desired television channels from said digitized plurality of frequencies; and

outputting, by said digital circuitry of said wideband receiver system, said selected plurality of television channels to a demodulator as a digital datastream.

12. (Original) The method of claim 11, comprising outputting, by said digital circuitry of said wideband receiver system, said digital datastream via a serial interface.

13. (Original) The method of claim 11, comprising outputting, by said digital circuitry of said wideband receiver system, said digital datastream via a parallel interface.

14. (Original) The method of claim 11, comprising:

generating, by a first mixer of said mixer module, an in-phase signal; and

generating, by a second mixer of said mixer module, a quadrature signal.

15. (Original) The method of claim 11, comprising:

generating, via a first ADC of said wideband analog-to-digital converter, a digital in-phase signal; and

generating, via a second ADC of said wideband analog-to-digital converter, a digital quadrature signal.

16. (Currently Amended) The method of claim 15, comprising frequency shifting said selected plurality of desired television channels via a plurality of complex mixers of said digital circuitry.

17. (Currently Amended) The method of claim 16, wherein:

prior to said frequency shifting, said selected plurality of desired television channels occupy non-contiguous portions of a frequency spectrum; and

after said frequency shifting, said selected plurality of desired television channels occupy a contiguous frequency spectrum.

18. (Original) The method of claim 11, wherein said digital circuitry comprises a plurality of channel filters configured to perform said selecting.

19. (Original) The method of claim 18, wherein each one of said plurality of channel filters is a finite impulse response filter.

20. (Currently Amended) The method of claim 11, comprising decimating, by said digital circuitry, one or more of said selected plurality of desired television channels prior to said outputting of said selected plurality of television channels.

REMARKS

In the Notice of Allowance, claims 1–20 were allowed. The Applicant thanks the Examiner for positive consideration of the claims. By this correspondence, claims 5–7, 10, 16–17, and 20 amended. The Applicant does not believe the above claim amendments should have any impact on the allowability of the claim since the amendments merely clarify the antecedent basis for certain claim terms.

Regarding the Examiner's reasons for allowance, the Applicant does not agree or disagree with the specific reasons for allowance set forth by the Examiner in the Notice of Allowance, and respectfully asserts that the allowability of the claims is based upon the features of the claims and the totality of the record. Applicant reserves the right to traverse the Examiner's stated reasons and/or to argue other reasons to support allowance of the claims, should the need arise in the future.

Respectfully submitted,

Dated: Oct 26, 2015

By: /Chad M. Gilles/
Chad M. Gilles
Reg. No. 60,590

McAndrews, Held & Malloy, Ltd.
500 West Madison Street - Ste. 3400
Chicago, Illinois 60661
(312) 775-8000

Electronic Patent Application Fee Transmittal

Application Number:	14614543
Filing Date:	05-Feb-2015
Title of Invention:	WIDEBAND TUNER ARCHITECTURE
First Named Inventor/Applicant Name:	Madhukar Reddy
Filer:	Chad M. Gilles/Laura Foley
Attorney Docket Number:	28427US04

Filed as Large Entity

Filing Fees for Utility under 35 USC 111(a)

Description	Fee Code	Quantity	Amount	Sub-Total in USD($)
Basic Filing:				
Pages:				
Claims:				
Miscellaneous-Filing:				
Petition:				
Patent-Appeals-and-Interference:				
Post-Allowance-and-Post-Issuance:				
Utility Appl Issue Fee	1501	1	960	960

Description	Fee Code	Quantity	Amount	Sub-Total in USD($)
Extension-of-Time:				
Miscellaneous:				
			Total in USD ($)	**960**

Electronic Acknowledgement Receipt

EFS ID:	23883899
Application Number:	14614543
International Application Number:	
Confirmation Number:	5785
Title of Invention:	WIDEBAND TUNER ARCHITECTURE
First Named Inventor/Applicant Name:	Madhukar Reddy
Customer Number:	23446
Filer:	Chad M. Gilles/Laura Foley
Filer Authorized By:	Chad M. Gilles
Attorney Docket Number:	28427US04
Receipt Date:	26-OCT-2015
Filing Date:	05-FEB-2015
Time Stamp:	09:14:04
Application Type:	Utility under 35 USC 111(a)

Payment information:

Submitted with Payment	yes
Payment Type	Credit Card
Payment was successfully received in RAM	$960
RAM confirmation Number	7721
Deposit Account	130017
Authorized User	GILLES, CHAD

The Director of the USPTO is hereby authorized to charge indicated fees and credit any overpayment as follows:

Charge any Additional Fees required under 37 C.F.R. Section 1.16 (National application filing, search, and examination fees)

Charge any Additional Fees required under 37 C.F.R. Section 1.17 (Patent application and reexamination processing fees)

Charge any Additional Fees required under 37 C.F.R. Section 1.19 (Document supply fees)

Charge any Additional Fees required under 37 C.F.R. Section 1.20 (Post Issuance fees)

Charge any Additional Fees required under 37 C.F.R. Section 1.21 (Miscellaneous fees and charges)

File Listing:

Document Number	Document Description	File Name	File Size(Bytes)/ Message Digest	Multi Part /.zip	Pages (if appl.)
1	Issue Fee Payment (PTO-85B)	28427US04_issue_fee_transmittal.pdf	1064924 ae7ffcd07015577c7c1970a81843a8c92bbe4ee6	no	1
Warnings:					
Information:					
2		28427US04_312_amendment_.pdf	39944 45b3b82582d702ca749852f609ba1701b5af7a99	yes	6

Multipart Description/PDF files in .zip description

Document Description	Start	End
Amendment after Notice of Allowance (Rule 312)	1	1
Claims	2	5
Applicant Arguments/Remarks Made in an Amendment	6	6

Warnings:					
Information:					
3	Fee Worksheet (SB06)	fee-info.pdf	30577 4ade398e6af89b19e63491f3604c21aeddcfefa7	no	2
Warnings:					
Information:					
			Total Files Size (in bytes):	1135445	

This Acknowledgement Receipt evidences receipt on the noted date by the USPTO of the indicated documents, characterized by the applicant, and including page counts, where applicable. It serves as evidence of receipt similar to a Post Card, as described in MPEP 503.

New Applications Under 35 U.S.C. 111
If a new application is being filed and the application includes the necessary components for a filing date (see 37 CFR 1.53(b)-(d) and MPEP 506), a Filing Receipt (37 CFR 1.54) will be issued in due course and the date shown on this Acknowledgement Receipt will establish the filing date of the application.

National Stage of an International Application under 35 U.S.C. 371
If a timely submission to enter the national stage of an international application is compliant with the conditions of 35 U.S.C. 371 and other applicable requirements a Form PCT/DO/EO/903 indicating acceptance of the application as a national stage submission under 35 U.S.C. 371 will be issued in addition to the Filing Receipt, in due course.

New International Application Filed with the USPTO as a Receiving Office
If a new international application is being filed and the international application includes the necessary components for an international filing date (see PCT Article 11 and MPEP 1810), a Notification of the International Application Number and of the International Filing Date (Form PCT/RO/105) will be issued in due course, subject to prescriptions concerning national security, and the date shown on this Acknowledgement Receipt will establish the international filing date of the application.

PRINTER RUSH

(PTO ASSISTANCE)

Application:	14614543	**Examiner:**	Jackson	**GAU:**	2649
From:	Nina Henry	**Location:**	RTFM	**Creation Date:**	10/30/2015

Tracking #: Week Date:

DOC CODE	DOC DATE	MISCELLANEOUS
[ ] 1449		[ ] Continuing Data
[ ] IDS		[ ] Foreign Priority
[ ] CLM		[ ] Document Legibility
[ ] IIFW/FWCLM		[ ] Fees
[ ] SRFW		[ ] Petition (TC)
[ ] DRW		[ ] Other
[ ] OATH		
[X] 312	10/26/2015	
[ ] SPEC		

[RUSH] Message:

Please respond to the 10/26/2015 A.NA.

Thank you,
NH

[XRUSH] Response:

Initials: _____

NOTE: This form will be included as part of the official USPTO record with the response document coded as XRUSH.
REV: JUL 15

PRINTER RUSH

(PTO ASSISTANCE)

Application:	14614543	**Examiner:**	Jackson	**GAU:**	2649
From:	Nina Henry	**Location:**	RTFM	**Creation Date:**	10/30/2015

Tracking #: Week Date:

DOC CODE	DOC DATE	MISCELLANEOUS
[ ] 1449		[ ] Continuing Data
[ ] IDS		[ ] Foreign Priority
[ ] CLM		[ ] Document Legibility
[ ] IIFW/FWCLM		[ ] Fees
[ ] SRFW		[ ] Petition (TC)
[ ] DRW		[ ] Other
[ ] OATH		
[X] 312	10/26/2015	
[ ] SPEC		

[RUSH] Message:

Please respond to the 10/26/2015 A.NA.

Thank you,
NH

[XRUSH] Response:

SERVICE CONFIRMED: /B.J./ 11/02/2015

Initials: _____

NOTE: This form will be included as part of the official USPTO record with the response document coded as XRUSH.
REV: JUL 15

UNITED STATES PATENT AND TRADEMARK OFFICE

UNITED STATES DEPARTMENT OF COMMERCE
United States Patent and Trademark Office
Address: COMMISSIONER FOR PATENTS
P.O. Box 1450
Alexandria, Virginia 22313-1450
www.uspto.gov

APPLICATION NO.	FILING DATE	FIRST NAMED INVENTOR	ATTORNEY DOCKET NO.	CONFIRMATION NO.
14/614,543	02/05/2015	Madhukar Reddy	28427US04	5785

23446 7590 11/06/2015
MCANDREWS HELD & MALLOY, LTD
500 WEST MADISON STREET
SUITE 3400
CHICAGO, IL 60661

EXAMINER
JACKSON, BLANE J

ART UNIT	PAPER NUMBER
2649	

NOTIFICATION DATE	DELIVERY MODE
11/06/2015	ELECTRONIC

Please find below and/or attached an Office communication concerning this application or proceeding.

The time period for reply, if any, is set in the attached communication.

Notice of the Office communication was sent electronically on above-indicated "Notification Date" to the following e-mail address(es):

mhmpto@mcandrews-ip.com

PTOL-90A (Rev. 04/07)

Response to Rule 312 Communication	Application No.	Applicant(s)
	14/614,543	REDDY ET AL.
	Examiner	**Art Unit**
	BLANE J. JACKSON	2649

-- The MAILING DATE of this communication appears on the cover sheet with the correspondence address --

1. ☒ The amendment filed on *26 October 2015* under 37 CFR 1.312 has been considered, and has been:

   a) ☒ entered.

   b) ☐ entered as directed to matters of form not affecting the scope of the invention.

   c) ☐ disapproved because the amendment was filed after the payment of the issue fee.
   Any amendment filed after the date the issue fee is paid must be accompanied by a petition under 37 CFR 1.313(c)(1) and the required fee to withdraw the application from issue.

   d) ☐ disapproved. See explanation below.

   e) ☐ entered in part. See explanation below.

/BLANE J JACKSON/
Primary Examiner, Art Unit 2649

OK TO ENTER: /B.J./

IN THE UNITED STATES PATENT AND TRADEMARK OFFICE
(Attorney Docket No. 28427US04)

In the Application of:

Madhukar Reddy

Serial No.: 14/614,543

Filed: Feb 5, 2015

Title: WIDEBAND TUNER ARCHITECTURE

Confirmation No.: 5785

Customer No.: 23446

AMENDMENT UNDER 37 C.F.R. § 1.312

This paper is submitted concurrently with the issue fee and responds to the Notice of Allowance mailed Oct 5, 2015 in the above-identified application. Applicant respectfully requests entry of the following remarks in the record and entry of the following claim amendments pursuant to 37 C.F.R. § 1.312.

To: mhmpto@mcandrews-ip.com,,
From: PAIR_eOfficeAction@uspto.gov
Cc: PAIR_eOfficeAction@uspto.gov
Subject: Private PAIR Correspondence Notification for Customer Number 23446

Nov 06, 2015 05:38:00 AM

Dear PAIR Customer:

MCANDREWS HELD & MALLOY, LTD
500 WEST MADISON STREET
SUITE 3400
CHICAGO, IL 60661
UNITED STATES

The following USPTO patent application(s) associated with your Customer Number, 23446 , have new outgoing correspondence. This correspondence is now available for viewing in Private PAIR.

The official date of notification of the outgoing correspondence will be indicated on the form PTOL-90 accompanying the correspondence.

Disclaimer:
The list of documents shown below is provided as a courtesy and is not part of the official file wrapper. The content of the images shown in PAIR is the official record.

Application	Document	Mailroom Date	Attorney Docket No.
14614543	N271	11/06/2015	28427US04

To view your correspondence online or update your email addresses, please visit us anytime at https://sportal.uspto.gov/secure/myportal/privatepair.

If you have any questions, please email the Electronic Business Center (EBC) at EBC@uspto.gov with 'e-Office Action' on the subject line or call 1-866-217-9197 during the following hours:

Monday - Friday 6:00 a.m. to 12:00 a.m.

Thank you for prompt attention to this notice,

UNITED STATES PATENT AND TRADEMARK OFFICE

PATENT APPLICATION INFORMATION RETRIEVAL SYSTEM

UNITED STATES PATENT AND TRADEMARK OFFICE

UNITED STATES DEPARTMENT OF COMMERCE
United States Patent and Trademark Office
Address: COMMISSIONER FOR PATENTS
P.O. Box 1450
Alexandria, Virginia 22313-1450
www.uspto.gov

APPLICATION NO.	ISSUE DATE	PATENT NO.	ATTORNEY DOCKET NO.	CONFIRMATION NO.
14/614,543	12/08/2015	9210362	28427US04	5785

23446 7590 11/18/2015
MCANDREWS HELD & MALLOY, LTD
500 WEST MADISON STREET
SUITE 3400
CHICAGO, IL 60661

ISSUE NOTIFICATION

The projected patent number and issue date are specified above.

Determination of Patent Term Adjustment under 35 U.S.C. 154 (b)
(application filed on or after May 29, 2000)

The Patent Term Adjustment is 0 day(s). Any patent to issue from the above-identified application will include an indication of the adjustment on the front page.

If a Continued Prosecution Application (CPA) was filed in the above-identified application, the filing date that determines Patent Term Adjustment is the filing date of the most recent CPA.

Applicant will be able to obtain more detailed information by accessing the Patent Application Information Retrieval (PAIR) WEB site (http://pair.uspto.gov).

Any questions regarding the Patent Term Extension or Adjustment determination should be directed to the Office of Patent Legal Administration at (571)-272-7702. Questions relating to issue and publication fee payments should be directed to the Application Assistance Unit (AAU) of the Office of Data Management (ODM) at (571)-272-4200.

APPLICANT(s) (Please see PAIR WEB site http://pair.uspto.gov for additional applicants):

Madhukar Reddy, Carlsbad, CA;
MaxLinear, Inc., Carlsbad, CA;
Curtis Ling, Carlsbad, CA;
Tim Gallagher, Carlsbad, CA;

The United States represents the largest, most dynamic marketplace in the world and is an unparalleled location for business investment, innovation, and commercialization of new technologies. The USA offers tremendous resources and advantages for those who invest and manufacture goods here. Through SelectUSA, our nation works to encourage and facilitate business investment. To learn more about why the USA is the best country in the world to develop technology, manufacture products, and grow your business, visit SelectUSA.gov.

IR103 (Rev. 10/09)

To: mhmpto@mcandrews-ip.com,,
From: PAIR_eOfficeAction@uspto.gov
Cc: PAIR_eOfficeAction@uspto.gov
Subject: Private PAIR Correspondence Notification for Customer Number 23446

Nov 19, 2015 08:33:48 AM

Dear PAIR Customer:

MCANDREWS HELD & MALLOY, LTD
500 WEST MADISON STREET
SUITE 3400
CHICAGO, IL 60661
UNITED STATES

The following USPTO patent application(s) associated with your Customer Number, 23446 , have new outgoing correspondence. This correspondence is now available for viewing in Private PAIR.

The official date of notification of the outgoing correspondence will be indicated on the form PTOL-90 accompanying the correspondence.

Disclaimer:
The list of documents shown below is provided as a courtesy and is not part of the official file wrapper. The content of the images shown in PAIR is the official record.

Application	Document	Mailroom Date	Attorney Docket No.
14614543	ISSUE.NTF	11/18/2015	28427US04

To view your correspondence online or update your email addresses, please visit us anytime at https://sportal.uspto.gov/secure/myportal/privatepair.

If you have any questions, please email the Electronic Business Center (EBC) at EBC@uspto.gov with 'e-Office Action' on the subject line or call 1-866-217-9197 during the following hours:

Monday - Friday 6:00 a.m. to 12:00 a.m.

Thank you for prompt attention to this notice,

UNITED STATES PATENT AND TRADEMARK OFFICE

PATENT APPLICATION INFORMATION RETRIEVAL SYSTEM

UNITED STATES PATENT AND TRADEMARK OFFICE

UNITED STATES DEPARTMENT OF COMMERCE
United States Patent and Trademark Office
Address: COMMISSIONER FOR PATENTS
P.O. Box 1450
Alexandria, Virginia 22313-1450
www.uspto.gov

APPLICATION NUMBER	FILING OR 371(C) DATE	FIRST NAMED APPLICANT	ATTY.DOCKET NO./TITLE	REQUEST ID
14/614,543	02/05/2015	MaxLinear, Inc.	28427US04	85006

Acknowledgement of Loss of Entitlement to Entity Status Discount

The entity status change request below filed through Private PAIR on 04/03/2019 has been accepted.

CERTIFICATIONS:

Change of Entity Status:

X Applicant changing to regular undiscounted fee status.
NOTE: Checking this box will be taken to be notification of loss of entitlement to small or micro entity status, as applicable.

This portion must be completed by the signatory or signatories making the entity status change in accordance with 37 CFR 1.4(d)(4).

Signature:	/Christopher C. Winslade/
Name:	/Christopher C. Winslade/
Registration Number:	36308

PTO/AIA/80 (07-17)
Approved for use through 03/31/2021. OMB 0651-0035
U.S. Patent and Trademark Office; U.S. DEPARTMENT OF COMMERCE
Under the Paperwork Reduction Act of 1995, no person is required to respond to a collection of information unless it displays a valid OMB control number

POWER OF ATTORNEY TO PROSECUTE APPLICATIONS BEFORE THE USPTO

I hereby revoke all previous powers of attorney given in the application identified in the attached statement under 37 CFR 3.73(c).

I hereby appoint:

[X] Practitioners associated with Customer Number: 23,446

OR

[ ] Practitioner(s) named below (if more than ten patent practitioners are to be named, then a customer number must be used):

Name	Registration Number	Name	Registration Number

As attorney(s) or agent(s) to represent the undersigned before the United States Patent and Trademark Office (USPTO) in connection with any and all patent applications assigned only to the undersigned according to the USPTO assignment records or assignment documents attached to this form in accordance with 37 CFR 3.73(c).

Please change the correspondence address for the application identified in the attached statement under 37 CFR 3.73(c) to:

[X] The address associated with Customer Number: 23,446

OR

[ ]

Firm or individual name		
Address		
City	State	Zip
Country		
Telephone	Email	

Assignee name and address: ENTROPIC COMMUNICATIONS, LLC
1345 AVENUE OF THE AMERICAS, 46TH FLOOR
NEW YORK, NY 10105

A copy of this form, together with a statement under 37 CFR 3.73(c) (Form PTO/AIA/96 or equivalent) is required to be filed in each application in which this form is used. The statement under 37 CFR 3.73(c) may be completed by one of the practitioners appointed in this form, and must identify the application in which this Power of Attorney is to be filed.

SIGNATURE of Assignee of Record

The individual whose signature and title is supplied below is authorized to act on behalf of the assignee.

Signature /Andrea L. Gothing/	Date 2021-05-04
Name Andrea L. Gothing	Telephone 415-830-0613
Title Licensing Officer and Authorized Signatory, Entropic Communications, LLC	

This collection of information is required by 37 CFR 1.31, 1.32, and 1.33. The information is required to obtain or retain a benefit by the public, which is to update (and by the USPTO to process) the file of a patent or reexamination proceeding. Confidentiality is governed by 35 U.S.C. 122 and 37 CFR 1.11 and 1.14. This collection is estimated to take 18 minutes to complete, including gathering, preparing, and submitting the completed application form to the USPTO. Time will vary depending upon the individual case. Any comments on the amount of time you require to complete this form and/or suggestions for reducing this burden, should be sent to the Chief Information Officer, U.S. Patent and Trademark Office, U.S. Department of Commerce, P.O. Box 1450, Alexandria, VA 22313-1450. DO NOT SEND FEES OR COMPLETED FORMS TO THIS ADDRESS. **SEND TO: Commissioner for Patents, P.O. Box 1450, Alexandria, VA 22313-1450.**
If you need assistance in completing the form, call 1-800-PTO-9199 and select option 2.

Privacy Act Statement

The **Privacy Act of 1974 (P.L. 93-579)** requires that you be given certain information in connection with your submission of the attached form related to a patent application or patent. Accordingly, pursuant to the requirements of the Act, please be advised that: (1) the general authority for the collection of this information is 35 U.S.C. 2(b)(2); (2) furnishing of the information solicited is voluntary; and (3) the principal purpose for which the information is used by the U.S. Patent and Trademark Office is to process and/or examine your submission related to a patent application or patent. If you do not furnish the requested information, the U.S. Patent and Trademark Office may not be able to process and/or examine your submission, which may result in termination of proceedings or abandonment of the application or expiration of the patent.

The information provided by you in this form will be subject to the following routine uses:

1. The information on this form will be treated confidentially to the extent allowed under the Freedom of Information Act (5 U.S.C. 552) and the Privacy Act (5 U.S.C 552a). Records from this system of records may be disclosed to the Department of Justice to determine whether disclosure of these records is required by the Freedom of Information Act.
2. A record from this system of records may be disclosed, as a routine use, in the course of presenting evidence to a court, magistrate, or administrative tribunal, including disclosures to opposing counsel in the course of settlement negotiations.
3. A record in this system of records may be disclosed, as a routine use, to a Member of Congress submitting a request involving an individual, to whom the record pertains, when the individual has requested assistance from the Member with respect to the subject matter of the record.
4. A record in this system of records may be disclosed, as a routine use, to a contractor of the Agency having need for the information in order to perform a contract. Recipients of information shall be required to comply with the requirements of the Privacy Act of 1974, as amended, pursuant to 5 U.S.C. 552a(m).
5. A record related to an International Application filed under the Patent Cooperation Treaty in this system of records may be disclosed, as a routine use, to the International Bureau of the World Intellectual Property Organization, pursuant to the Patent Cooperation Treaty.
6. A record in this system of records may be disclosed, as a routine use, to another federal agency for purposes of National Security review (35 U.S.C. 181) and for review pursuant to the Atomic Energy Act (42 U.S.C. 218(c)).
7. A record from this system of records may be disclosed, as a routine use, to the Administrator, General Services, or his/her designee, during an inspection of records conducted by GSA as part of that agency's responsibility to recommend improvements in records management practices and programs, under authority of 44 U.S.C. 2904 and 2906. Such disclosure shall be made in accordance with the GSA regulations governing inspection of records for this purpose, and any other relevant (*i.e.*, GSA or Commerce) directive. Such disclosure shall not be used to make determinations about individuals.
8. A record from this system of records may be disclosed, as a routine use, to the public after either publication of the application pursuant to 35 U.S.C. 122(b) or issuance of a patent pursuant to 35 U.S.C. 151. Further, a record may be disclosed, subject to the limitations of 37 CFR 1.14, as a routine use, to the public if the record was filed in an application which became abandoned or in which the proceedings were terminated and which application is referenced by either a published application, an application open to public inspection or an issued patent.
9. A record from this system of records may be disclosed, as a routine use, to a Federal, State, or local law enforcement agency, if the USPTO becomes aware of a violation or potential violation of law or regulation.

Electronic Acknowledgement Receipt

EFS ID:	42754953
Application Number:	14614543
International Application Number:	
Confirmation Number:	5785
Title of Invention:	WIDEBAND TUNER ARCHITECTURE
First Named Inventor/Applicant Name:	Madhukar Reddy
Customer Number:	23446
Filer:	Ronald H. Spuhler/Deborah Wilson
Filer Authorized By:	Ronald H. Spuhler
Attorney Docket Number:	28427US04
Receipt Date:	18-MAY-2021
Filing Date:	05-FEB-2015
Time Stamp:	16:21:16
Application Type:	Utility under 35 USC 111(a)

Payment information:

Submitted with Payment	no

File Listing:

Document Number	Document Description	File Name	File Size(Bytes)/ Message Digest	Multi Part /.zip	Pages (if appl.)
1	Assignee showing of ownership per 37 CFR 3.73	28427US04_373c_Statement_AIA-96.pdf	120583 b06b63dd21b75ce08cdcdf221fb3c1091eef2781	no	3

Warnings:

Information:					
2	Power of Attorney	Entropic-POA_General_Assignee_EntropicCommunications_ALG.pdf	487892 51444e06ae84b241bfc127dc47c5d6c646944dd7	no	2
Warnings:					
Information:					
			Total Files Size (in bytes):	608475	

This Acknowledgement Receipt evidences receipt on the noted date by the USPTO of the indicated documents, characterized by the applicant, and including page counts, where applicable. It serves as evidence of receipt similar to a Post Card, as described in MPEP 503.

New Applications Under 35 U.S.C. 111
If a new application is being filed and the application includes the necessary components for a filing date (see 37 CFR 1.53(b)-(d) and MPEP 506), a Filing Receipt (37 CFR 1.54) will be issued in due course and the date shown on this Acknowledgement Receipt will establish the filing date of the application.
National Stage of an International Application under 35 U.S.C. 371
If a timely submission to enter the national stage of an international application is compliant with the conditions of 35 U.S.C. 371 and other applicable requirements a Form PCT/DO/EO/903 indicating acceptance of the application as a national stage submission under 35 U.S.C. 371 will be issued in addition to the Filing Receipt, in due course.
New International Application Filed with the USPTO as a Receiving Office
If a new international application is being filed and the international application includes the necessary components for an international filing date (see PCT Article 11 and MPEP 1810), a Notification of the International Application Number and of the International Filing Date (Form PCT/RO/105) will be issued in due course, subject to prescriptions concerning national security, and the date shown on this Acknowledgement Receipt will establish the international filing date of the application.

PTO/AIA/96 (08-12)
Approved for use through 01/31/2013. OMB 0651-0031
U.S. Patent and Trademark Office; U.S. DEPARTMENT OF COMMERCE
Under the Paperwork Reduction Act of 1995, no persons are required to respond to a collection of information unless it displays a valid OMB control number.

STATEMENT UNDER 37 CFR 3.73(c)

Applicant/Patent Owner: ENTROPIC COMMUNICATIONS, LLC

Application No./Patent No.: 14/614,543 Filed/Issue Date: 2015-02-05

Titled: WIDEBAND TUNER ARCHITECTURE

ENTROPIC COMMUNICATIONS, LLC, a limited liability company

(Name of Assignee) (Type of Assignee, e.g., corporation, partnership, university, government agency, etc.)

states that, for the patent application/patent identified above, it is (choose **one** of options 1, 2, 3 or 4 below):

1. ☑ The assignee of the entire right, title, and interest.

2. ☐ An assignee of less than the entire right, title, and interest (check applicable box):

☐ The extent (by percentage) of its ownership interest is _____%. Additional Statement(s) by the owners holding the balance of the interest must be submitted to account for 100% of the ownership interest.

☐ There are unspecified percentages of ownership. The other parties, including inventors, who together own the entire right, title and interest are:

Additional Statement(s) by the owner(s) holding the balance of the interest must be submitted to account for the entire right, title, and interest.

3. ☐ The assignee of an undivided interest in the entirety (a complete assignment from one of the joint inventors was made). The other parties, including inventors, who together own the entire right, title, and interest are:

Additional Statement(s) by the owner(s) holding the balance of the interest must be submitted to account for the entire right, title, and interest.

4. ☐ The recipient, via a court proceeding or the like (*e.g.*, bankruptcy, probate), of an undivided interest in the entirety (a complete transfer of ownership interest was made). The certified document(s) showing the transfer is attached.

The interest identified in option 1, 2 or 3 above (not option 4) is evidenced by either (choose **one** of options A or B below):

A. ☐ An assignment from the inventor(s) of the patent application/patent identified above. The assignment was recorded in the United States Patent and Trademark Office at Reel _____, Frame _____, or for which a copy thereof is attached.

B. ☑ A chain of title from the inventor(s), of the patent application/patent identified above, to the current assignee as follows:

1. From: Curtis Ling, Madhukar Reddy, Tim Gallagher To: MAXLINEAR, INC.

The document was recorded in the United States Patent and Trademark Office at Reel 031851, Frame 0086, or for which a copy thereof is attached.

2. From: MAXLINEAR, INC. To: ENTROPIC COMMUNICATIONS, LLC

The document was recorded in the United States Patent and Trademark Office at Reel 055898, Frame 0230, or for which a copy thereof is attached.

This collection of information is required by 37 CFR 3.73(b). The information is required to obtain or retain a benefit by the public which is to file (and by the USPTO to process) an application. Confidentiality is governed by 35 U.S.C. 122 and 37 CFR 1.11 and 1.14. This collection is estimated to take 12 minutes to complete, including gathering, preparing, and submitting the completed application form to the USPTO. Time will vary depending upon the individual case. Any comments on the amount of time you require to complete this form and/or suggestions for reducing this burden, should be sent to the Chief Information Officer, U.S. Patent and Trademark Office, U.S. Department of Commerce, P.O. Box 1450, Alexandria, VA 22313-1450. DO NOT SEND FEES OR COMPLETED FORMS TO THIS ADDRESS. **SEND TO: Commissioner for Patents, P.O. Box 1450, Alexandria, VA 22313-1450**.

If you need assistance in completing the form, call 1-800-PTO-9199 and select option 2.

Under the Paperwork Reduction Act of 1995, no persons are required to respond to a collection of information unless it displays a valid OMB control number.

STATEMENT UNDER 37 CFR 3.73(c)

3. From: _____ To: _____

The document was recorded in the United States Patent and Trademark Office at

Reel _____, Frame _____, or for which a copy thereof is attached.

4. From: _____ To: _____

The document was recorded in the United States Patent and Trademark Office at

Reel _____, Frame _____, or for which a copy thereof is attached.

5. From: _____ To: _____

The document was recorded in the United States Patent and Trademark Office at

Reel _____, Frame _____, or for which a copy thereof is attached.

6. From: _____ To: _____

The document was recorded in the United States Patent and Trademark Office at

Reel _____, Frame _____, or for which a copy thereof is attached.

☐ Additional documents in the chain of title are listed on a supplemental sheet(s).

☑ As required by 37 CFR 3.73(c)(1)(i), the documentary evidence of the chain of title from the original owner to the assignee was, or concurrently is being, submitted for recordation pursuant to 37 CFR 3.11.

[NOTE: A separate copy (i.e., a true copy of the original assignment document(s)) must be submitted to Assignment Division in accordance with 37 CFR Part 3, to record the assignment in the records of the USPTO. See MPEP 302.08]

The undersigned (whose title is supplied below) is authorized to act on behalf of the assignee.

/Ronald H. Spuhler/	2021-05-18
Signature	Date
Ronald H. Spuhler	52245
Printed or Typed Name	Title or Registration Number

[Page 2 of 2]

Privacy Act Statement

The **Privacy Act of 1974 (P.L. 93-579)** requires that you be given certain information in connection with your submission of the attached form related to a patent application or patent. Accordingly, pursuant to the requirements of the Act, please be advised that: (1) the general authority for the collection of this information is 35 U.S.C. 2(b)(2); (2) furnishing of the information solicited is voluntary; and (3) the principal purpose for which the information is used by the U.S. Patent and Trademark Office is to process and/or examine your submission related to a patent application or patent. If you do not furnish the requested information, the U.S. Patent and Trademark Office may not be able to process and/or examine your submission, which may result in termination of proceedings or abandonment of the application or expiration of the patent.

The information provided by you in this form will be subject to the following routine uses:

1. The information on this form will be treated confidentially to the extent allowed under the Freedom of Information Act (5 U.S.C. 552) and the Privacy Act (5 U.S.C 552a). Records from this system of records may be disclosed to the Department of Justice to determine whether disclosure of these records is required by the Freedom of Information Act.
2. A record from this system of records may be disclosed, as a routine use, in the course of presenting evidence to a court, magistrate, or administrative tribunal, including disclosures to opposing counsel in the course of settlement negotiations.
3. A record in this system of records may be disclosed, as a routine use, to a Member of Congress submitting a request involving an individual, to whom the record pertains, when the individual has requested assistance from the Member with respect to the subject matter of the record.
4. A record in this system of records may be disclosed, as a routine use, to a contractor of the Agency having need for the information in order to perform a contract. Recipients of information shall be required to comply with the requirements of the Privacy Act of 1974, as amended, pursuant to 5 U.S.C. 552a(m).
5. A record related to an International Application filed under the Patent Cooperation Treaty in this system of records may be disclosed, as a routine use, to the International Bureau of the World Intellectual Property Organization, pursuant to the Patent Cooperation Treaty.
6. A record in this system of records may be disclosed, as a routine use, to another federal agency for purposes of National Security review (35 U.S.C. 181) and for review pursuant to the Atomic Energy Act (42 U.S.C. 218(c)).
7. A record from this system of records may be disclosed, as a routine use, to the Administrator, General Services, or his/her designee, during an inspection of records conducted by GSA as part of that agency's responsibility to recommend improvements in records management practices and programs, under authority of 44 U.S.C. 2904 and 2906. Such disclosure shall be made in accordance with the GSA regulations governing inspection of records for this purpose, and any other relevant (*i.e.*, GSA or Commerce) directive. Such disclosure shall not be used to make determinations about individuals.
8. A record from this system of records may be disclosed, as a routine use, to the public after either publication of the application pursuant to 35 U.S.C. 122(b) or issuance of a patent pursuant to 35 U.S.C. 151. Further, a record may be disclosed, subject to the limitations of 37 CFR 1.14, as a routine use, to the public if the record was filed in an application which became abandoned or in which the proceedings were terminated and which application is referenced by either a published application, an application open to public inspection or an issued patent.
9. A record from this system of records may be disclosed, as a routine use, to a Federal, State, or local law enforcement agency, if the USPTO becomes aware of a violation or potential violation of law or regulation.

UNITED STATES PATENT AND TRADEMARK OFFICE

UNITED STATES DEPARTMENT OF COMMERCE
United States Patent and Trademark Office
Address: COMMISSIONER FOR PATENTS
P.O. Box 1450
Alexandria, Virginia 22313-1450
www.uspto.gov

APPLICATION NUMBER	FILING OR 371(C) DATE	FIRST NAMED APPLICANT	ATTY. DOCKET NO./TITLE
14/614,543	02/05/2015	Madhukar Reddy	28427US04

CONFIRMATION NO. 5785

23446
MCANDREWS HELD & MALLOY, LTD
500 WEST MADISON STREET
SUITE 3400
CHICAGO, IL 60661

POA ACCEPTANCE LETTER

OC000000125764692

Date Mailed: 05/24/2021

NOTICE OF ACCEPTANCE OF POWER OF ATTORNEY

This is in response to the Power of Attorney filed 05/18/2021.

The Power of Attorney in this application is accepted. Correspondence in this application will be mailed to the above address as provided by 37 CFR 1.33.

Questions about the contents of this notice and the requirements it sets forth should be directed to the Office of Data Management, Application Assistance Unit, at **(571) 272-4000** or **(571) 272-4200** or **1-888-786-0101**.

/sibrahim/

To: mhmpto@mcandrews-ip.com,,
From: PAIR_eOfficeAction@uspto.gov
Cc: PAIR_eOfficeAction@uspto.gov
Subject: Private PAIR Correspondence Notification for Customer Number 23446

May 25, 2021 03:49:59 AM

Dear PAIR Customer:

MCANDREWS HELD & MALLOY, LTD
500 WEST MADISON STREET
SUITE 3400
CHICAGO, IL 60661
UNITED STATES

The following USPTO patent application(s) associated with your Customer Number, 23446 , have new outgoing correspondence. This correspondence is now available for viewing in Private PAIR.

The official date of notification of the outgoing correspondence will be indicated on the form PTOL-90 accompanying the correspondence.

Disclaimer:
The list of documents shown below is provided as a courtesy and is not part of the official file wrapper. The content of the images shown in PAIR is the official record.

Application	Document	Mailroom Date	Attorney Docket No.
14614543	N570	05/24/2021	28427US04

To view your correspondence online or update your email addresses, please visit us anytime at https://sportal.uspto.gov/secure/myportal/privatepair.

If you have any questions, please email the Electronic Business Center (EBC) at EBC@uspto.gov with 'e-Office Action' on the subject line or call 1-866-217-9197 during the following hours:

Monday - Friday 6:00 a.m. to 12:00 a.m.

Thank you for prompt attention to this notice,

UNITED STATES PATENT AND TRADEMARK OFFICE

PATENT APPLICATION INFORMATION RETRIEVAL SYSTEM

AO 120 (Rev. 08/10)

TO: Mail Stop 8 Director of the U.S. Patent and Trademark Office P.O. Box 1450 Alexandria, VA 22313-1450	REPORT ON THE FILING OR DETERMINATION OF AN ACTION REGARDING A PATENT OR TRADEMARK

In Compliance with 35 U.S.C. § 290 and/or 15 U.S.C. § 1116 you are hereby advised that a court action has been filed in the U.S. District Court Eastern District of Texas on the following

☐ Trademarks or ☑ Patents. (☐ the patent action involves 35 U.S.C. § 292.):

DOCKET NO.	DATE FILED	U.S. DISTRICT COURT
2:22-cv-125	4/27/2022	Eastern District of Texas

PLAINTIFF	DEFENDANT
ENTROPIC COMMUNICATIONS, LLC	CHARTER COMMUNICATIONS, INC., ET AL

PATENT OR TRADEMARK NO.	DATE OF PATENT OR TRADEMARK	HOLDER OF PATENT OR TRADEMARK
1 8,223,775	7/17/2012	Entropic Communications, LLC
2 8,284,690	10/9/2012	Entropic Communications, LLC
3 8,792,008	7/29/2014	Entropic Communications, LLC
4 9,210,362	12/8/2015	Entropic Communications, LLC
5 9,825,826	11/21/2017	Entropic Communications, LLC

In the above—entitled case, the following patent(s)/ trademark(s) have been included:

DATE INCLUDED	INCLUDED BY ☐ Amendment ☐ Answer ☐ Cross Bill ☐ Other Pleading	
PATENT OR TRADEMARK NO.	DATE OF PATENT OR TRADEMARK	HOLDER OF PATENT OR TRADEMARK
1		
2		
3		
4		
5		

In the above—entitled case, the following decision has been rendered or judgement issued:

DECISION/JUDGEMENT

CLERK	(BY) DEPUTY CLERK	DATE

Copy 1—Upon initiation of action, mail this copy to Director Copy 3—Upon termination of action, mail this copy to Director
Copy 2—Upon filing document adding patent(s), mail this copy to Director Copy 4—Case file copy

AO 120 (Rev. 08/10)

TO: Mail Stop 8 Director of the U.S. Patent and Trademark Office P.O. Box 1450 Alexandria, VA 22313-1450	REPORT ON THE FILING OR DETERMINATION OF AN ACTION REGARDING A PATENT OR TRADEMARK

In Compliance with 35 U.S.C. § 290 and/or 15 U.S.C. § 1116 you are hereby advised that a court action has been filed in the U.S. District Court Eastern District of Texas on the following

☐ Trademarks or ☑ Patents. (☐ the patent action involves 35 U.S.C. § 292.):

DOCKET NO.	DATE FILED	U.S. DISTRICT COURT
2:22-cv-125	4/27/2022	Eastern District of Texas

PLAINTIFF	DEFENDANT
ENTROPIC COMMUNICATIONS, LLC	CHARTER COMMUNICATIONS, INC., ET AL

PATENT OR TRADEMARK NO.	DATE OF PATENT OR TRADEMARK	HOLDER OF PATENT OR TRADEMARK
1 10,135,682	11/20/2018	Entropic Communications, LLC
2		
3		
4		
5		

In the above—entitled case, the following patent(s)/ trademark(s) have been included:

DATE INCLUDED	INCLUDED BY ☐ Amendment ☐ Answer ☐ Cross Bill ☐ Other Pleading	
PATENT OR TRADEMARK NO.	DATE OF PATENT OR TRADEMARK	HOLDER OF PATENT OR TRADEMARK
1		
2		
3		
4		
5		

In the above—entitled case, the following decision has been rendered or judgement issued:

DECISION/JUDGEMENT

CLERK	(BY) DEPUTY CLERK	DATE

Copy 1—Upon initiation of action, mail this copy to Director Copy 3—Upon termination of action, mail this copy to Director
Copy 2—Upon filing document adding patent(s), mail this copy to Director Copy 4—Case file copy