US011381866B2

(12) **United States Patent**
Reddy et al.

(10) **Patent No.: US 11,381,866 B2**
(45) **Date of Patent: *Jul. 5, 2022**

(54) **CABLE TELEVISION DEVICE**

(71) Applicant: **Entropic Communications, LLC**, New York, NY (US)

(72) Inventors: **Madhukar Reddy**, Carlsbad, CA (US); **Curtis Ling**, Carlsbad, CA (US); **Tim Gallagher**, Carlsbad, CA (US)

(73) Assignee: **Entropic Communications, LLC**, New York, NY (US)

(*) Notice: Subject to any disclaimer, the term of this patent is extended or adjusted under 35 U.S.C. 154(b) by 0 days.

This patent is subject to a terminal disclaimer.

(21) Appl. No.: **17/587,415**

(22) Filed: **Jan. 28, 2022**

(65) **Prior Publication Data**

US 2022/0159331 A1 May 19, 2022

Related U.S. Application Data

(63) Continuation of application No. 17/217,244, filed on Mar. 30, 2021, now abandoned, which is a

(Continued)

(51) **Int. Cl.**
H04B 1/00 (2006.01)
H04N 21/41 (2011.01)

(Continued)

(52) **U.S. Cl.**
CPC ***H04N 21/4263*** (2013.01); ***H04B 1/0014*** (2013.01); ***H04N 5/455*** (2013.01);

(Continued)

(58) **Field of Classification Search**
CPC H04B 1/16; H04B 1/0014; H04N 5/454; H04N 5/455; H04N 5/50; H04N 21/4263;

(Continued)

(56) **References Cited**

U.S. PATENT DOCUMENTS

5,280,636 A 1/1994 Kelley et al.
5,590,156 A 12/1996 Carney

(Continued)

FOREIGN PATENT DOCUMENTS

EP 2087623 A2 8/2009
WO WO-9748196 A1 * 12/1997 ..... H04B 10/25753
WO WO-02087230 A1 * 10/2002 ..... H04N 21/4384

OTHER PUBLICATIONS

Jeffrey A. Weldon, et al. A 1.75-GHz Highly Integrated Narrow-Band CMOS Transmitter With Harmonic-Rejection Mixers, IEEE Journal of Solid-State Circuits, Dec. 2001, pp. 2003-2015, vol. 36, No. 12, Seattle, Washington.

(Continued)

Primary Examiner — Blane J Jackson
(74) *Attorney, Agent, or Firm* — McAndrews, Held & Malloy, Ltd.

(57) **ABSTRACT**

A wideband receiver system comprises a wideband analog-to-digital converter (ADC) module and a digital frontend (DFE) module. The wideband ADC is configured to concurrently digitize a band of frequencies comprising a plurality of desired channels and a plurality of undesired channels. The DFE module is coupled to the digital in-phase and quadrature signals. The DFE module is configured to select the plurality of desired channels from the digitized band of frequencies, and generate an intermediate frequency (IF) signal comprising the selected plurality of desired channels and having a bandwidth that is less than a bandwidth of the band of frequencies, where the generation comprises frequency shifting of the selected plurality of desired channels. The IF signal may be a digital signal and the DFE is configured to output the IF signal via a serial or parallel interface.

82 Claims, 10 Drawing Sheets

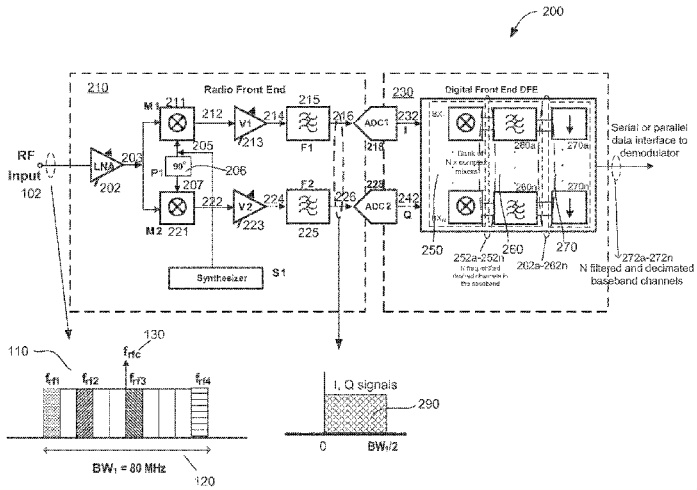

Comcast, Ex. 1201

Related U.S. Application Data

continuation of application No. 16/430,506, filed on Jun. 4, 2019, now Pat. No. 10,972,781, which is a continuation of application No. 15/792,318, filed on Oct. 24, 2017, now Pat. No. 10,313,733, which is a continuation of application No. 14/948,881, filed on Nov. 23, 2015, now Pat. No. 9,819,992, which is a continuation of application No. 14/617,973, filed on Feb. 10, 2015, now Pat. No. 9,210,363, which is a continuation of application No. 13/962,871, filed on Aug. 8, 2013, now Pat. No. 9,100,622, which is a continuation of application No. 12/762,900, filed on Apr. 19, 2010, now Pat. No. 8,526,898.

(60) Provisional application No. 61/170,526, filed on Apr. 17, 2009.

(51) **Int. Cl.**

H04B 1/16	(2006.01)
H04N 21/426	(2011.01)
H04N 5/50	(2006.01)
H04N 21/438	(2011.01)
H04N 21/454	(2011.01)
H04N 21/61	(2011.01)
H04N 5/455	(2006.01)

(52) **U.S. Cl.**
CPC ***H04N 5/50*** (2013.01); ***H04N 21/4382*** (2013.01); ***H04N 21/4383*** (2013.01); ***H04N 21/454*** (2013.01); ***H04N 21/6143*** (2013.01); ***H04N 21/6193*** (2013.01)

(58) **Field of Classification Search**
CPC H04N 21/4382; H04N 21/4383; H04N 21/6143; H04N 21/6193
See application file for complete search history.

(56) **References Cited**

U.S. PATENT DOCUMENTS

5,705,949	A	1/1998	Alelyunas et al.	
5,768,268	A	6/1998	Kline et al.	
6,253,094	B1	6/2001	Schmutz	
6,262,981	B1	7/2001	Schmutz	
6,282,184	B1	8/2001	Lehman et al.	
6,735,421	B1 *	5/2004	Claxton	H04B 1/0007 455/313
6,760,342	B1 *	7/2004	Skones	H04B 1/28 370/437
6,906,498	B2	6/2005	Breuch et al.	
6,920,185	B2	7/2005	Hinson	
6,992,855	B2	1/2006	Ehrlich	
7,095,454	B2	8/2006	Waight et al.	
7,130,576	B1	10/2006	Gurantz et al.	
7,145,972	B2	12/2006	Kumar	
7,167,694	B2	1/2007	Khoini-Poorfard et al.	
7,362,178	B2	4/2008	Montemayor et al.	
7,373,125	B2	5/2008	Godambe et al.	
7,421,259	B2	9/2008	Gomez et al.	
7,477,871	B1	1/2009	Gurantz et al.	
7,542,715	B1	6/2009	Gurantz et al.	
7,599,673	B2	10/2009	Maxim et al.	
7,783,958	B1	8/2010	Eidson et al.	
7,941,091	B1	5/2011	Doherty et al.	
8,023,912	B2	9/2011	Petrovic et al.	
8,086,170	B2	12/2011	Petrovic et al.	
8,107,916	B2	1/2012	Gatta et al.	
8,238,813	B1	8/2012	Popoli	
8,285,240	B2	10/2012	Seendripu et al.	
8,300,681	B2	10/2012	Petrovic et al.	
8,331,886	B2	12/2012	Wang et al.	
8,374,568	B2	2/2013	Seendripu et al.	
8,374,569	B2	2/2013	Seendripu et al.	
8,374,570	B2	2/2013	Seendripu et al.	
8,526,898	B2	9/2013	Reddy et al.	
8,566,678	B2	10/2013	Eidson et al.	
8,577,319	B2	11/2013	Ling et al.	
8,611,809	B1	12/2013	Popoli	
8,666,350	B2	3/2014	Vauhkonen	
8,892,026	B2	11/2014	Petrovic et al.	
8,892,225	B2	11/2014	Walsh et al.	
8,909,187	B2	12/2014	Seendripu et al.	
9,059,672	B2	6/2015	Ling et al.	
9,100,622	B2	8/2015	Reddy et al.	
9,210,362	B2	12/2015	Reddy et al.	
9,210,363	B2	12/2015	Reddy et al.	
9,219,557	B2	12/2015	Bargroff et al.	
9,225,373	B2	12/2015	Gomez et al.	
9,413,476	B2	8/2016	Petrovic et al.	
9,819,992	B2	11/2017	Reddy et al.	
9,853,757	B2	12/2017	Petrovic et al.	
9,942,598	B2	4/2018	Reddy et al.	
10,313,733	B2	6/2019	Reddy et al.	
10,439,746	B2	10/2019	Petrovic et al.	
10,972,781	B2	4/2021	Reddy et al.	
11,139,902	B2	10/2021	Petrovic et al.	
2003/0158614	A1	8/2003	Friel et al.	
2003/0228855	A1	12/2003	Herz et al.	
2004/0058661	A1	3/2004	Hsu et al.	
2004/0110522	A1	6/2004	Reddy et al.	
2005/0040909	A1	2/2005	Waight et al.	
2005/0286562	A1	12/2005	Nakao et al.	
2007/0002961	A1	1/2007	Hoctor et al.	
2007/0032220	A1	2/2007	Feher	
2007/0042742	A1	2/2007	Kim et al.	
2007/0111661	A1	5/2007	Bargroff et al.	
2007/0179649	A1	8/2007	Mitsuno	
2007/0263754	A1	11/2007	Currivan et al.	
2009/0075613	A1	3/2009	Safarian et al.	
2009/0258629	A1	10/2009	Ritchey et al.	
2011/0105068	A1	5/2011	Reddy et al.	

OTHER PUBLICATIONS

Int'l Search Report and Written Opinion Appln No. PCT/2010/031631 dated Jun. 17, 2010.
Int'l Search Report and Written Opinion Appln No. PCT/2010/031627 dated Jun. 18, 2010.

* cited by examiner

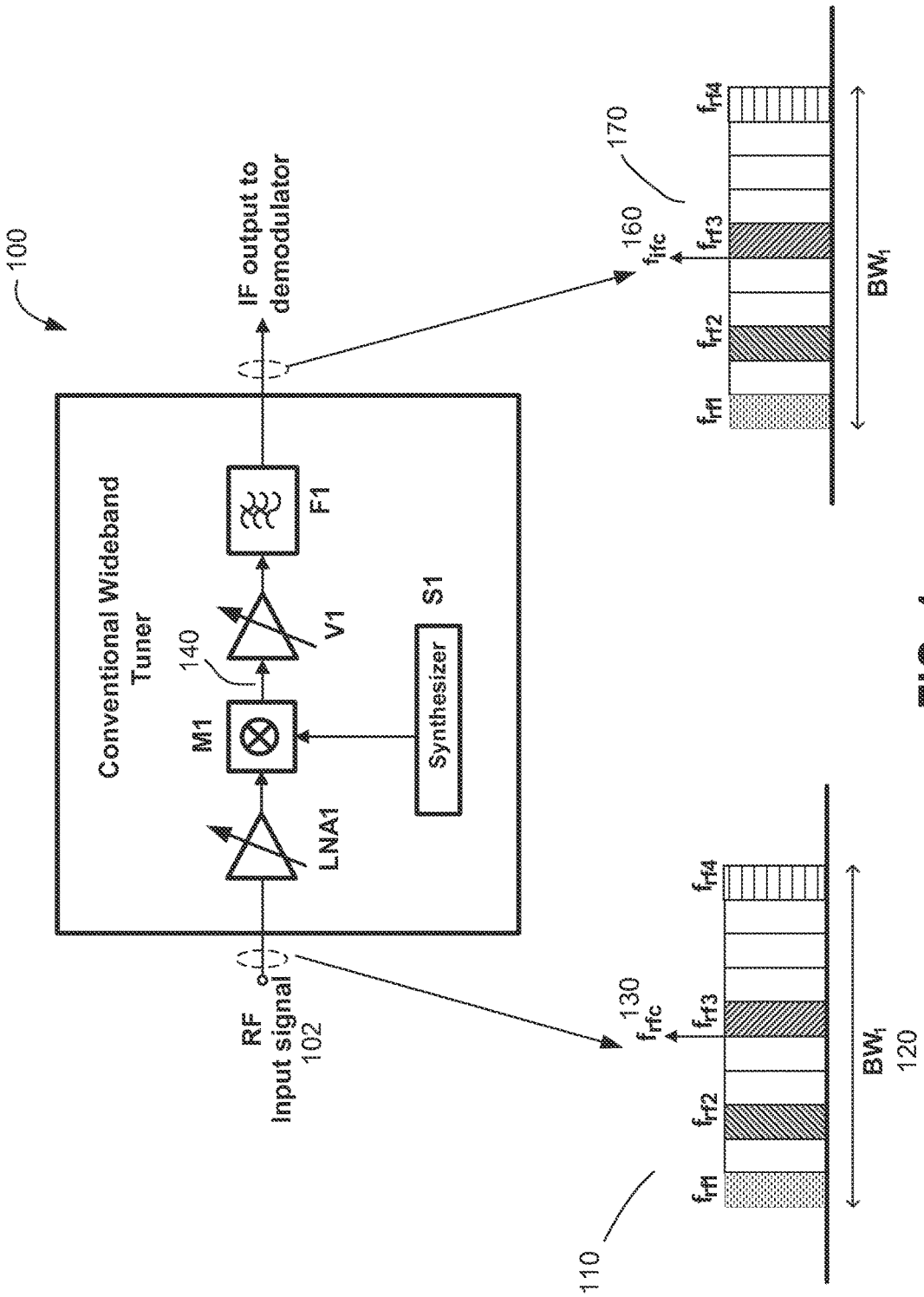

FIG. 1
(Prior Art)

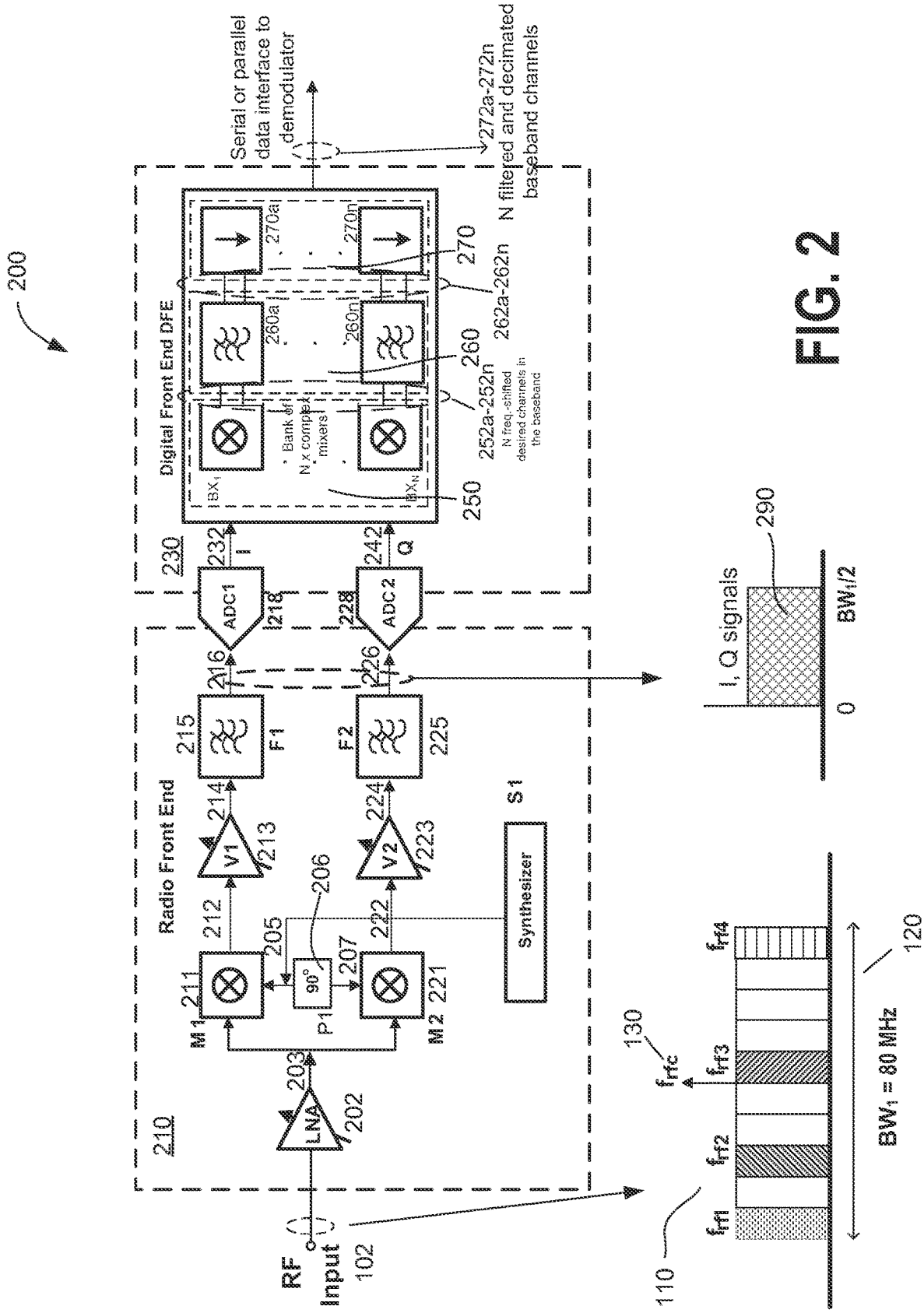
200
210
Radio Front End
230
Digital Front End DFE
RF Input
102
LNA
202
203
M1
211
P1
90°
205
206
207
M2
221
212
V1
213
214
V2
223
224
Synthesizer
S1
215
F1
216
F2
225
226
ADC1
218
ADC2
228
232
I
242
Q
BX1
BXN
Bank of N x complex mixers
250
252a-252n
N freq.-shifted desired channels in the baseband
260
260a
260n
262a-262n
270
270a
270n
Serial or parallel data interface to demodulator
272a-272n
N filtered and decimated baseband channels
I, Q signals
290
0
BW1/2
110
130
frfc
frf1
frf2
frf3
frf4
BW1 = 80 MHz
120

FIG. 2

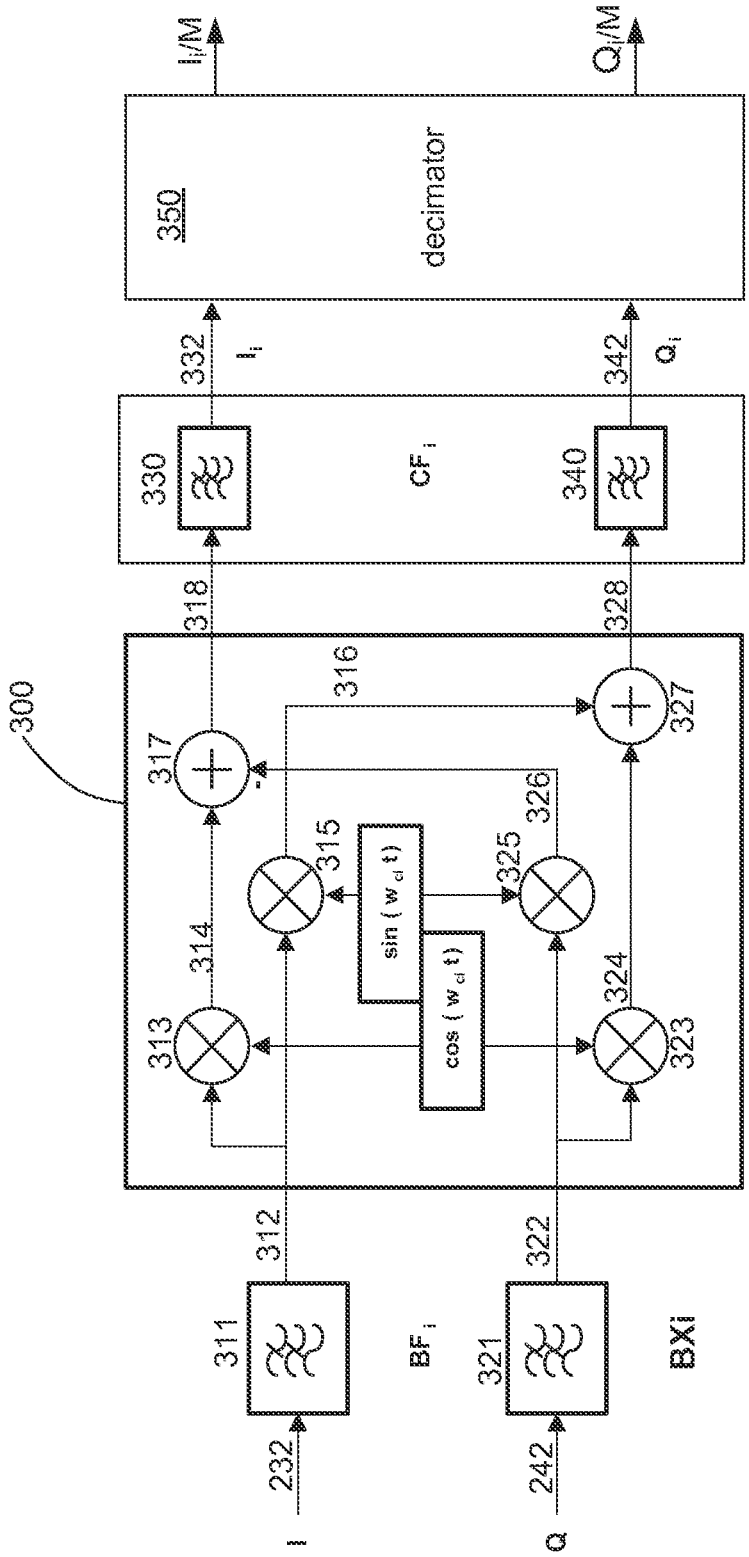

I
Q
232
242
311
321
BF i
BXi
312
322
313
314
315
316
317
318
323
324
325
326
327
328
300
sin (w cl t)
cos (w cl t)
330
340
CF i
332
342
I i
Q i
350
decimator
I i/M
Q i/M

FIG. 3

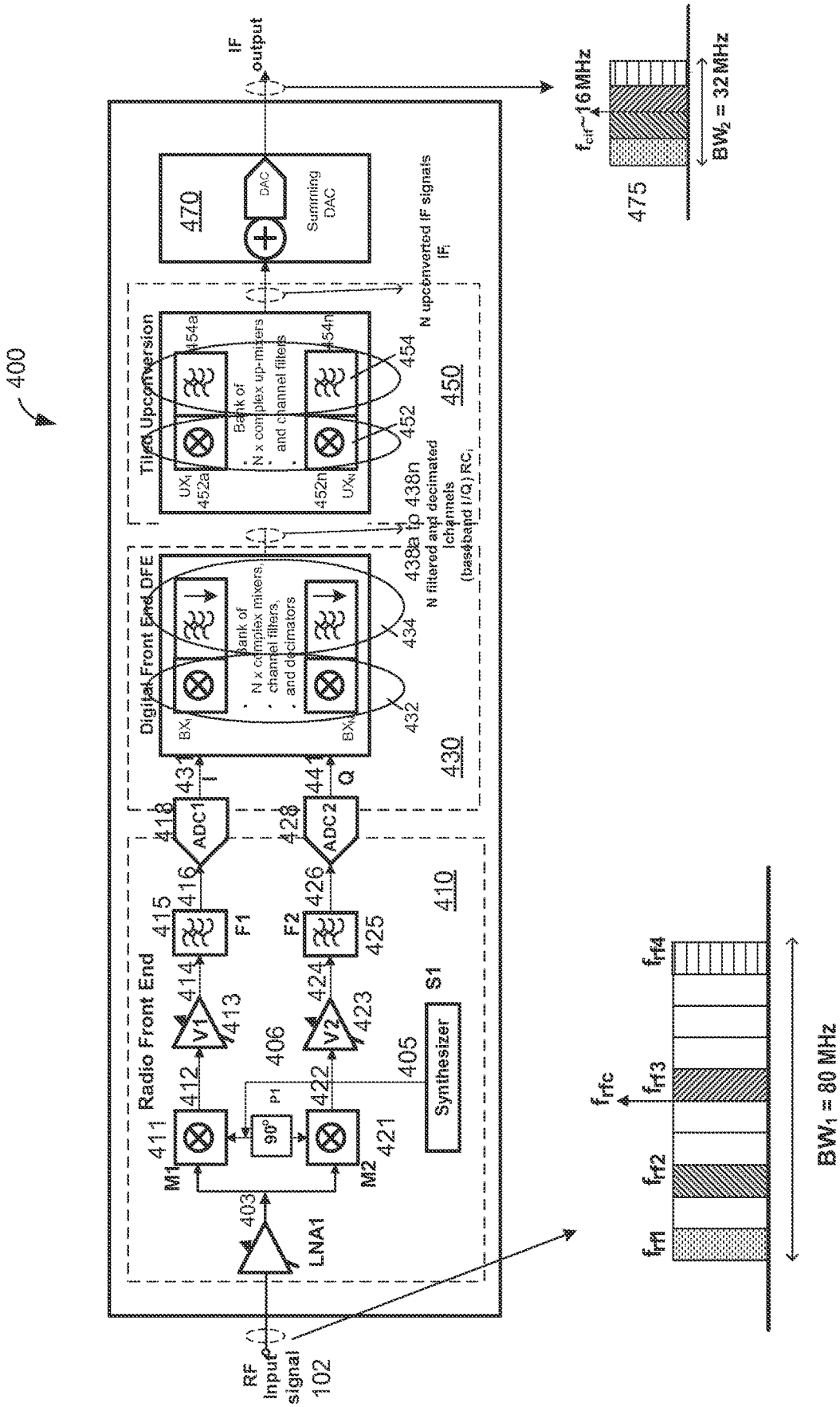
400
RF Input signal 102
LNA1
403
M1
M2
411
421
90°
P1
412
422
406
405
Synthesizer
S1
V1
V2
413
423
414
424
415
425
F1
F2
416
426
ADC1
ADC2
418
428
431
441
I
Q
Radio Front End
410
Digital Front End DFE
430
BX1
BX2
Bank of N x complex mixers, channel filters, and decimators
432
434
438a to 438n
N filtered and decimated Ichannels (baseband I/Q) RC1
Tiled Upconversion
450
UX1
452a
452n
454a
454n
Bank of N x complex up-mixers and channel filters
452
454
N upconverted IF signals IF1
470
DAC
Summing DAC
IF output
475
fcif~16 MHz
BW2 = 32 MHz
frf1
frf2
frfc
frf3
frf4
BW1 = 80 MHz

FIG. 4

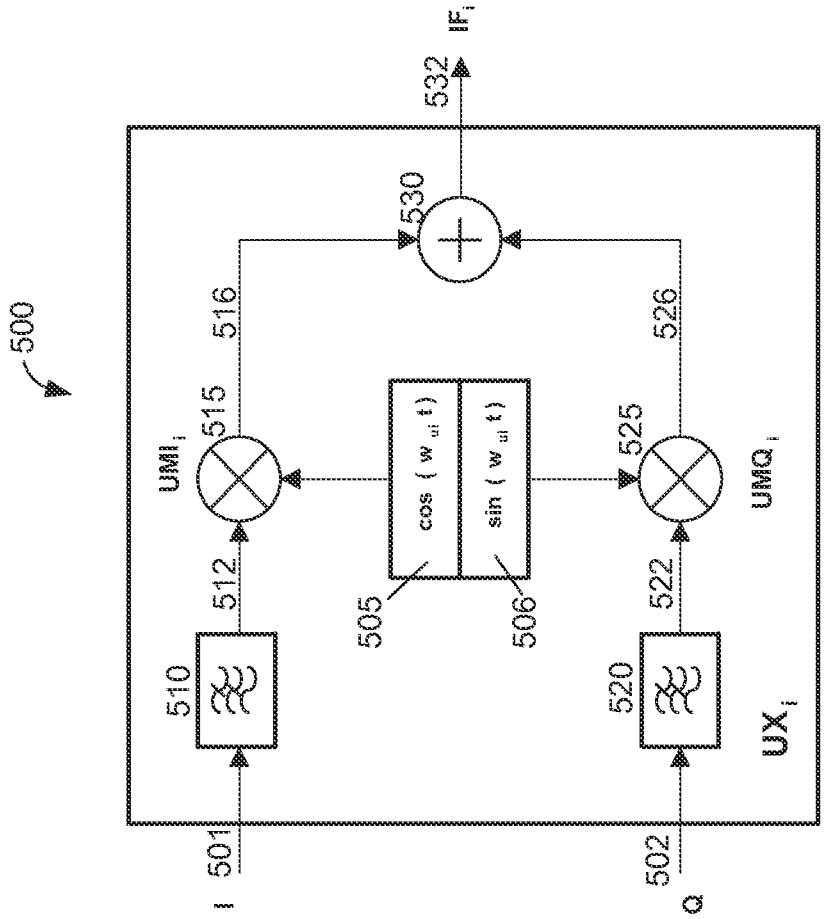
500
501
502
I
Q
510
520
512
522
515
525
516
526
530
532
UX_i
UMI_i
UMQ_i
505
506
cos (w_{ui} t)
sin (w_{ui} t)
IF_i

FIG. 5

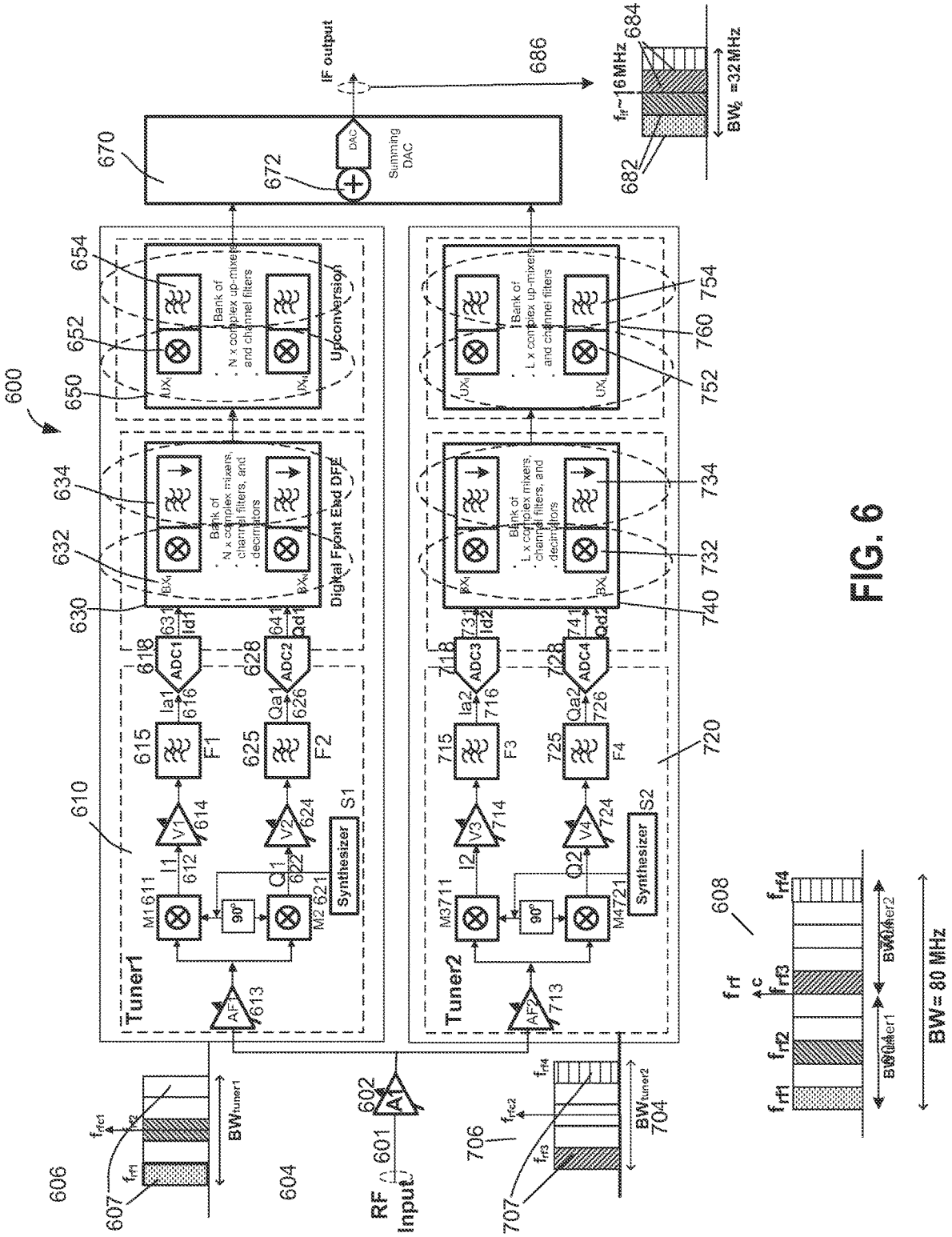
600
Tuner1
Tuner2
Synthesizer
Digital Front End DFE
Upconversion
Bank of N x complex mixers, channel filters, and decimators
Bank of L x complex mixers, channel filters, and decimators
Bank of N x complex up-mixers and channel filters
Bank of L x complex up-mixers and channel filters
Summing DAC
DAC
IF output
RF Input
BW = 80 MHz
BW = 32 MHz
BW = 16 MHz

FIG. 6

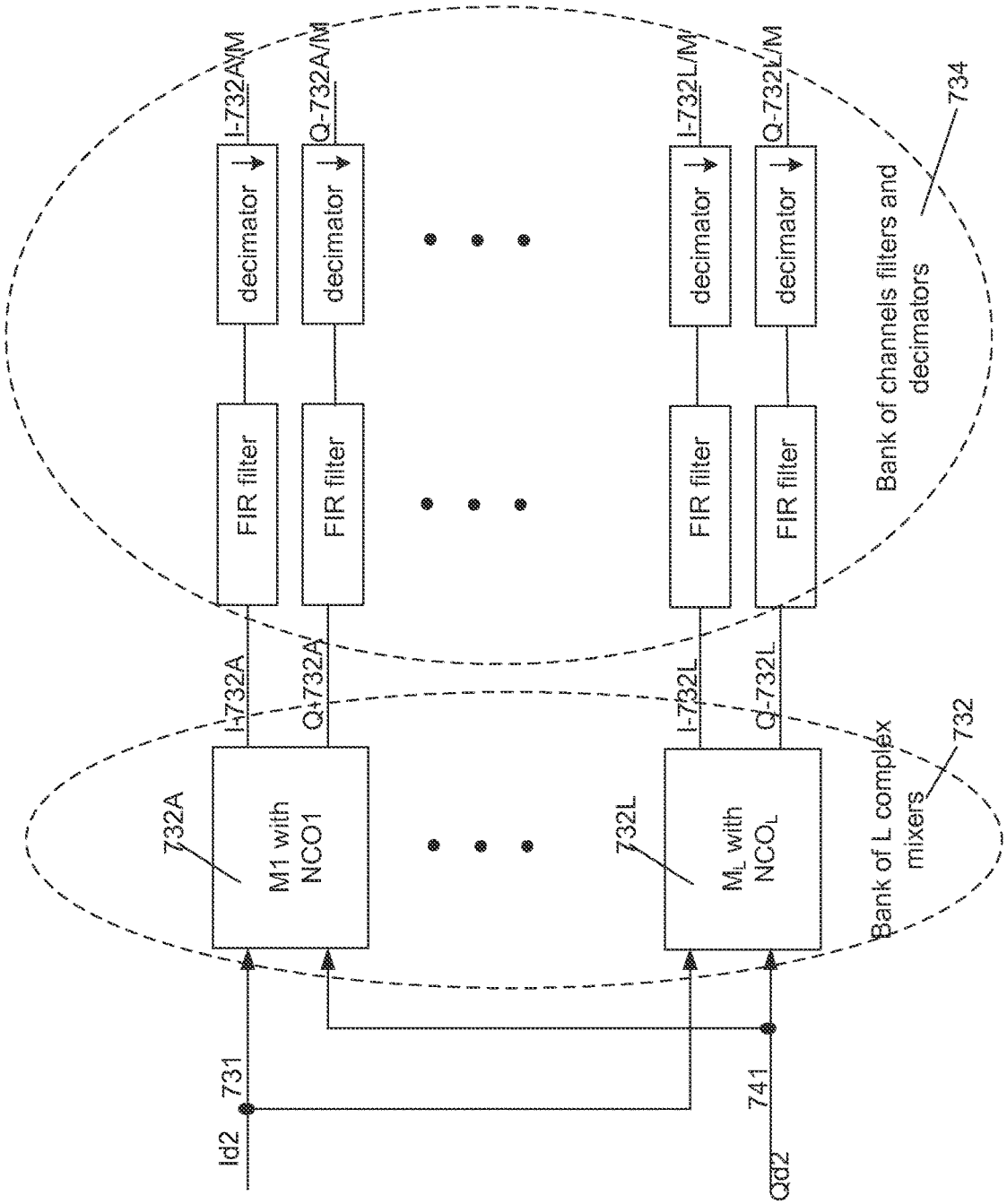
I-732A/M
Q-732A/M
I-732L/M
Q-732L/M
decimator
decimator
decimator
decimator
FIR filter
FIR filter
FIR filter
FIR filter
Bank of channels filters and decimators
734
I-732A
Q-732A
I-732L
Q-732L
732A
M1 with NCO1
732L
M_L with NCO_L
Bank of L complex mixers
732
731
741
Id2
Qd2

FIG. 7

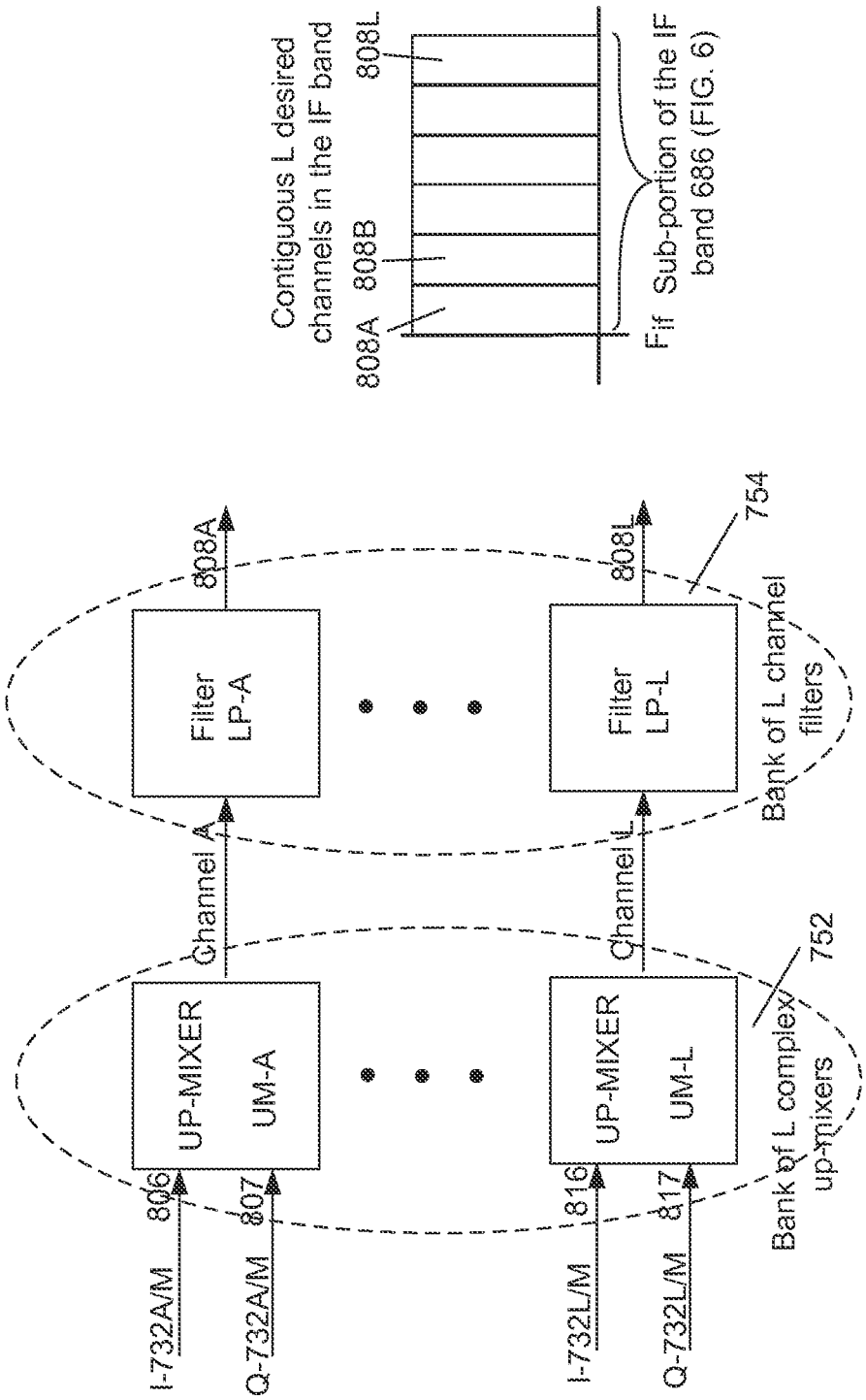
Contiguous L desired channels in the IF band
808A
808B
808L
Fif
Sub-portion of the IF band 686 (FIG. 6)
I-732A/M
Q-732A/M
806
807
UP-MIXER
UM-A
Channel A
Filter LP-A
808A
I-732L/M
Q-732L/M
816
817
UP-MIXER
UM-L
Channel L
Filter LP-L
808L
752
Bank of L complex up-mixers
754
Bank of L channel filters

FIG. 8

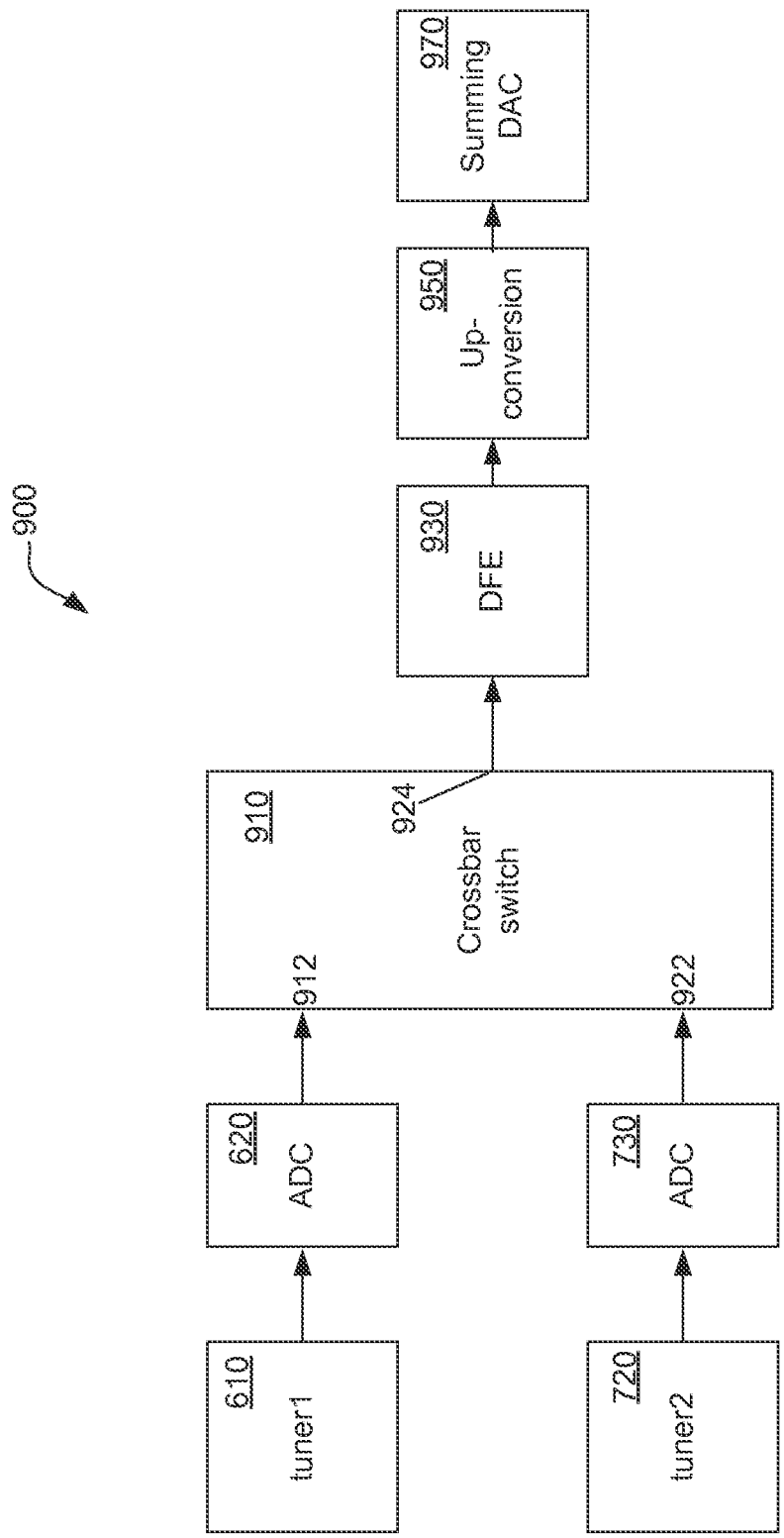
900
610
tuner1
620
ADC
720
tuner2
730
ADC
910
912
922
924
Crossbar switch
930
DFE
950
Up-conversion
970
Summing DAC

FIG. 9

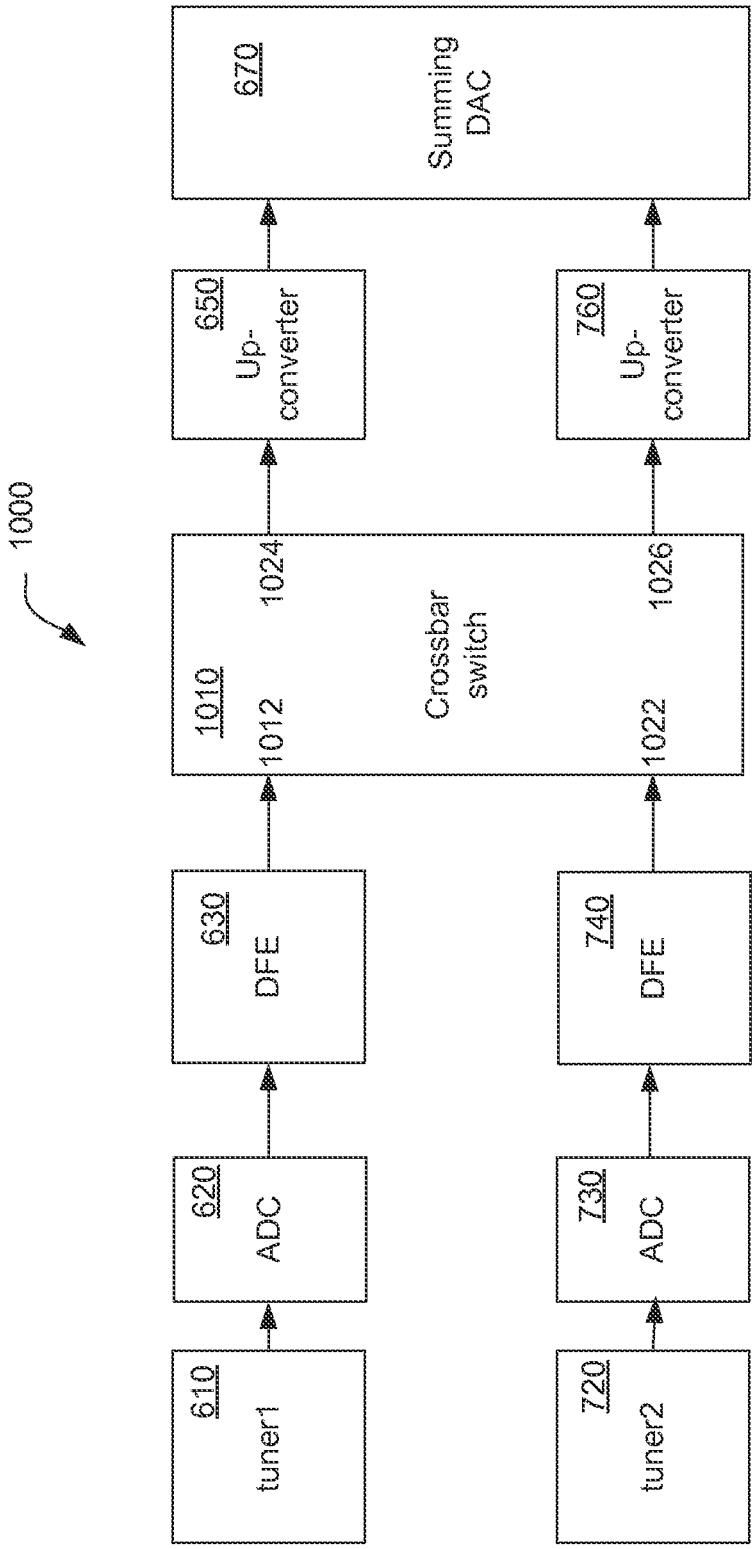
1000
610
tuner1
620
ADC
630
DFE
1010
1012
1024
Crossbar
switch
1022
1026
650
Up-
converter
670
Summing
DAC
720
tuner2
730
ADC
740
DFE
760
Up-
converter

FIG. 10

CABLE TELEVISION DEVICE

PRIORITY CLAIM

This application is a continuation of U.S. patent application Ser. No. 17/217,244 filed on Mar. 30, 2021, which is a continuation of U.S. patent application Ser. No. 16/430,506 (now U.S. Pat. No. 10,972,781) filed on Jun. 4, 2019, which is a continuation of U.S. patent application Ser. No. 15/792,318 (now U.S. Pat. No. 10,313,733) filed Oct. 24, 2017, which is a continuation of U.S. patent application Ser. No. 14/948,881 (now U.S. Pat. No. 9,819,992) filed Nov. 23, 2015, which is a continuation of U.S. patent application Ser. No. 14/617,973 (now U.S. Pat. No. 9,210,363) filed on Feb. 10, 2015, which is a continuation of U.S. patent application Ser. No. 13/962,871 (now U.S. Pat. No. 9,100,622) filed on Aug. 8, 2013, which is a continuation of U.S. patent application Ser. No. 12/762,900 filed on Apr. 19, 2010 (now U.S. Pat. No. 8,526,898), which claims the benefit of priority to U.S. provisional application 61/170,526 filed Apr. 17, 2009, now expired. Each of the above referenced documents is hereby incorporated by reference in its entirety.

BACKGROUND

This invention relates to wideband receiver systems and methods having a wideband receiver that is capable of receiving multiple radio frequency channels located in a broad radio frequency spectrum. In particular, the invention relates to wideband receiver systems that are capable of receiving multiple desired television channels that extend over multiple non-contiguous portions of the broad frequency spectrum and grouping them into a contiguous, or substantially-contiguous, frequency spectrum.

Receivers used to down-convert and selectively filter TV channels are referred to as tuners, and tuners designed to concurrently receive several TV channels are referred to as wideband tuners. Existing tuners for these applications down-convert a swath of channels to an intermediate frequency, which are then sent to a demodulator. Because the swath of channels is not contiguous, this swath includes the desired channels as well as undesired channels. The demodulator employs a high-speed data converter to capture this swath of desired and undesired channels in the digital domain and subsequently filters out the desired channels.

In general, television channels broadcasted over the air or over cable networks are distributed across a broad frequency spectrum. That is, the channel frequencies may not be adjacent to each other. In certain applications such as DVR and picture-in-picture, the receiver system may have to concurrently receive several desired channels that may or may not be contiguous. The wideband receiver requirement poses a trade-off to the system to limit either the dynamic range of the wideband tuner or reduce the bandwidth covered by the tuner so that fewer channels may be received and processed by the demodulator.

FIG. **1** shows a conventional wideband tuner **100**. Tuner **100** may be a direct conversion tuner and includes a low noise amplifier LNA**1** having an input terminal coupled to a radio frequency (RF) input signal **102** and an output terminal coupled to a mixer M**1**. The RF signal may include one or more television channels receiving from a cable network via an RF connector or wirelessly via an antenna. The RF input signal may include the VHF and UHF television channels in a terrestrial television broadcasting system or the CATV channels in cable networks. In order to receive all broadcasted channels present in the RF input signal, LNA**1** must

necessarily have a wide tuning range, high linearity, and low noise. Mixer M**1** is coupled to a synthesizer S**1** that can generate an oscillator frequency located around the center of the RF signal. Mixer M**1** frequency down-converts the received RF input signal to a more convenient intermediate frequency (IF) band. Tuner **100** includes an amplifier V**1** having a programmable gain for amplifying the IF signal, which is then band-pass filtered by a filter F**1** before outputting to a demodulator.

In general, the RF signal includes multiple desired channels that are located in non-contiguous portions of a radio frequency spectrum. As shown in FIG. **1**, the swath of channels **110** occupies a bandwidth BW**1** **120** at an RF center frequency f_{rfc} **130**. Synthesizer S**1** may be tuned to a frequency around the center frequency f_{rfc} **130** for mixing channels **110** to an intermediate frequency f_{ifc} **160**, the frequency down-mixed channels **140** are amplified by amplifier V**1** and then filtered by F**1** to produce a swath of channels **170** centered around frequency f_{ifc} **160**. In an exemplary application shown in FIG. **1**, bandwidth BW**1** contains 10 channels. In the case where channels are TV channels that are spaced at either 6 MHz or 8 MHz in most parts of the world, bandwidth BW**1** **120** would span from 60-80 MHz, i.e., the down-converted bandwidth at the intermediate frequency would require a bandwidth equal to at least BW**1**, or at least 80 MHz when such architecture is used. It is noted that in other applications where the desired RF channels are located in the low band such as channels numbers 2 to 6 (VHF in the terrestrial TV broadcast or CATV) and in the high band such as channels numbers 14 to 83 of the UHF TV broadcast or channel numbers 63-158 of the CATV's ultra band, the bandwidth BW**1** can be 800 MHz or higher. This wide bandwidth of 800 MHz would require a very expensive digital processing circuitry such as very high-speed analog to digital conversion and high-speed processor in the demodulator.

It is desirable to have wideband receiver systems that can increase the dynamic range without requiring expensive data conversion, filtering and channel selection at the demodulator.

BRIEF SUMMARY

An embodiment of the present invention includes a wideband receiver system that is configured to concurrently receive multiple radio frequency (RF) channels including a number of desired channels that are located in non-contiguous portions of a frequency spectrum and group the desired channels in a contiguous or substantially-contiguous frequency band at an intermediate frequency spectrum, where the term "substantially-contiguous" includes spacing the desired channels close to each other (e.g. as a fraction of the total system bandwidth, or relative to a channel bandwidth) but with a spacing that can be variable to accommodate the needs of overall system. The term "contiguous" heretofore encompasses "substantially-contiguous." The term "spacing" is referred to as the frequency difference between adjacent channels. The system includes a wideband receiver having a complex mixer module for down-shifting the multiple RF channels and transforming them to an in-phase signal and a quadrature signal in the baseband or low intermediate frequency (IF) band. The system further includes a wideband analog-to-digital converter module that digitizes the in-phase and quadrature signals. The digital in-phase and quadrature signals are provided to a digital frontend module that contains a bank of complex mixers that

frequency-shift the number of desired channels to a baseband where the desired channels are individually filtered.

The digital frontend module may also include a decimator module that decimates the desired RF channels by a factor M before demodulating them to a digital data stream.

In certain embodiments of the present invention, the wideband receiver system additionally includes an up-converter module having multiple complex up-mixers, each of the complex up-mixers is configured to frequency up-shift each one of the desired RF channels to a sub-portion of an IF spectrum, wherein all sub-portions of the desired channels are adjacent to each another and form a contiguous frequency band in the IF spectrum. The act of frequency shifting the desired channels to the IF spectrum allows the wideband receiver system to directly interface with commercially available demodulators. Allowing the spacing of the desired channels in the contiguous spectrum to be variable allows a system to optimize placement of these desired channels for the purposes of avoiding sensitive portions of the spectrum which may either be vulnerable to spurious signals and interference; or which may generate interference directly or as a harmonic product, to other systems.

In another embodiment of the present invention, a multi-tuner receiver system having two or more tuners is provided to receive multiple desired RF channels that extend over several non-contiguous sub-portions of a broad frequency spectrum and group them into a contiguous frequency spectrum. The multi-tuner system includes at least a first tuner that processes a first sub-portion of the broad frequency spectrum into a first in-phase signal and a first quadrature signal and a second tuner that processes a second sub-portion of the broad frequency spectrum into a second in-phase signal and a second quadrature signal. The multi-tuner receiver system further includes a first analog-to-digital converter module that digitizes the first in-phase and quadrature signals and a second analog-to-digital converter module that digitizes the second in-phase and quadrature signals. In addition, the multi-tuner system includes a first digital frontend module having a first number of complex mixers corresponding to a first number of the desired RF channels located in the first sub-portion of the broad frequency spectrum and a second digital frontend module having a second number of complex mixers corresponding to a second number of the desired RF channels located in the second sub-portion of the broad frequency spectrum. The first digital frontend module frequency shifts the first number of the desired RF channels to a first plurality of baseband signals and the second digital frontend module frequency shifts the second number of the desired RF channels to a second plurality of baseband signals.

The multi-tuner system further includes a first up-converter module having a plurality of N complex mixers, wherein N is an integer value equal to the number of desired channel. The first up-converter module frequency up-shifts the first plurality of the baseband signals to a first portion of an intermediate frequency. In addition, the multi-tuner system includes a second up-converter module that frequency up-shifts the second plurality of the baseband signals to a second portion of an intermediate frequency. The first and the second portions of the intermediate frequency are non-overlapping and located adjacent to each other to form a contiguous intermediate frequency (IF) band. The multi-tuner system further includes a digital-to-analog converter that converts the contiguous IF band to an analog waveform signal.

BRIEF DESCRIPTION OF THE DRAWINGS

FIG. **1** is a schematic block diagram of a conventional wideband tuner;

FIG. **2** is a schematic block diagram of a wideband receiver system according to an embodiment of the present invention;

FIG. **3** is a simplified circuit diagram of a complex down-mixer according to an embodiment of the present invention;

FIG. **4** is a simplified schematic block diagram of a wideband receiver system according to another embodiment of the present invention;

FIG. **5** is a simplified circuit diagram of a complex up-mixer according to an embodiment of the present invention;

FIG. **6** is a simplified schematic block diagram of a wideband multi-tuner receiver system according to an embodiment of the present invention;

FIG. **7** is a block diagram illustrating an exemplary digital front end according to an embodiment of the present invention in more detail;

FIG. **8** is a block diagram illustrating an exemplary tiled up-converter module according to an embodiment of the present invention in more detail;

FIG. **9** is a simplified block diagram of a wideband multi-tuner receiver system **900** according to an embodiment of the present invention; and

FIG. **10** is a simplified block diagram of a wideband multi-tuner receiver system **1000** according to another embodiment of the present invention.

DETAILED DESCRIPTION

FIG. **2** is a schematic block diagram of a wideband receiver system **200** according to an embodiment of the present invention. Wideband receiver system **200** includes a radio front end **210** and a digital front end **230**. Radio front end **210** may be a single very wide-band tuner receiver that captures the desired swath of channels located in non-contiguous portions of the spectrum having a frequency bandwidth BW**1** **120**. In this example, the number of available channels in BW**1** **120** is assumed to be 10 with each channel occupying an 8 MHz bandwidth for a total of 80 MHz. Radio front end **210** is shown as including a low noise amplifier LNA **202** having an input terminal configured to receive an RF input signal **102**. In the example shown, RF signal **102** includes four desired RF channels having the respective carrier frequency f_{rf1}, f_{rf2}, f_{rf3}, and f_{rf4} that are located in non-contiguous portions of the wide frequency spectrum BW**1**. It is understood, however, that spectrum BW**1** **120** may have any other number of desired frequencies that are not contiguous. LNA **202** has a very low noise figure and very high linearity and a wide tuning range (i.e., very high IIP**2** and IIP**3** intercept points) to maximize a signal-to-noise-and distortion ratio (SNDR) at the amplifier output. LNA **202** may have a programmable gain to amplify RF signal **102** to adequate voltage levels for mixers M**1** **211** and M**2** **221**.

Mixers M**1** **211** and M**2** **221** may be conventional mixers formed using, for example, differential Gilbert cells. Each of the mixers **211** and **221** multiplies (mixes) an amplified RF signal **203** with a respective first oscillator frequency signal **205** and a second oscillator frequency signal **207** to generate an in-phase signal **212** and a quadrature signal **222** that have a phase shift of 90° degree between them. Mixers **211** and **221** are identical so that the amplitude of the in-phase signal

212 and quadrature signal 222 are the same. The first and second oscillator frequencies 205 and 207 are identical and have a 90° degree phase shift generated through a 90° degree phase shifter P1 206. Synthesizer S1 may be a single local oscillator operable to generate the oscillator frequency 205 for converting the receive RF signal 102 to a zero-IF or low-IF band. Synthesizer S1 can be a coarse (large step) phase locked loop. Synthesizer S1 can also be programmable to cover the wideband frequency of the analog and digital terrestrial broadcast and/or the cable television system. The RF signal 102 may have relatively uniform signal strength in a cable network. However, its signal strength may extend in several orders of magnitude in a terrestrial broadcast system, thus, LNA 202 and/or mixers M1 211, M2 221 are required to have a relatively high dynamic range to handle the large variations in the signal strength.

In-phase signal 212 and quadrature signal 222 are further amplified and filtered by respective amplifiers V1 213, V2 223 and filters F1 215, F2 225 to generate a filtered in-phase signal 216 and a filtered quadrature signal 226. Filters F1 215 and F2 225 may be passive or active low-pass filters to filter out any unwanted frequency components of the signals 214 and 224 before digitizing them for further processing in digital front end 230. It is understood that the in-phase path 216 and the quadrature path 226 must have the same amplitude spectrum and maintain a fixed phase relationship, i.e., amplifiers V1 213, V2 223 and filters F1 215, F2 225 must be substantially identical. Because the two paths 216 and 226 are in quadrature, the spectral components from both positive and negative frequencies can be overlaid so that the bandwidth (cutoff frequency) of filters F1 215 and F2 225 can be one half of the BW1 bandwidth 120.

Analog-to-digital converters ADC1 218 and ADC2 228 are high-speed (i.e., high sampling rate) converters to maximize the dynamic range. In an exemplary application, radio front end 210 operates as a nominal zero-IF down-mixer so that signals 216 and 226 have a nominal bandwidth 290 equal to one half of the RF signal bandwidth BW1 thanks to the complex down-mixer architecture. In other embodiment, radio front end 210 operates as a low-IF down-mixer so that the nominal bandwidth 290 of signals 216 and 226 is greater than one half of the bandwidth BW1. In practice, the sampling rate of ADC1 218 and ADC2 228 is chosen to be higher than the Nyquist sampling requirement, i.e., the filtered analog quadrature signals 216 and 226 may be over-sampled in order to reduce or avoid aliasing of undesired signals into the digitized I and Q signals.

ADC1 218 generates a digital signal I 232 that is a digital representation of the analog filtered signal 216; ADC2 228 generates a digital signal Q 242 that is a digital representation of the analog filtered signal 226. Digital signals I 232 and Q 242 are then applied to a bank of N complex mixers 250, wherein N is an integer value corresponding to the number of desired RF channels located in the non-contiguous portions of the frequency spectrum BW1. It is understood that the number N can be any integer value. In one embodiment, N can be equal to the number of all available channels that exist in the licensed frequency spectrum to provide system flexibility. In other embodiments, N can be equal to the number of all receivable channels within a geographic area. In yet another embodiment, N can be an integer value less than the number of receivable channels with the geographic area to reduce system costs. In the exemplary embodiment shown in FIG. 2, the number of desired channels is 4. That is, each of the 4 complex mixers 250 mixes in-phase and quadrature signals 232 and 242 with an associated frequency to generate a corresponding baseband, which is then individually filtered, decimated and provided to an associated demodulator.

Each of the N complex mixers 250 receives the digital signals I 232 and Q 242 from ADCs 218 and 228 to extract a different one of the desired channels and frequency-shifts the extracted signals to the baseband frequency. Each of the frequency shifted desired channels 252 is filtered by an associated filter module (identified as 260*a* to 260*n*). In an embodiment, each of the filtered signals 260*a* to 260*n* may be sent directly to an associated demodulator (identified as 270*a* to 270*n*) for extracting the original information transmitted in the associated desired channel. In another embodiment, each of the filtered signals 262*a* to 262*n* is further decimated before providing to a demodulator. A path of digital front end 230 is described in more detail below.

FIG. 3 is a simplified circuit diagram of one of the signal paths 272*a* to 272*n* of digital front end 230 shown in FIG. 2 according to an embodiment of the present invention. In an embodiment, digital signal I 232 may be further filtered by a filter 311 to obtain a filtered signal 312. Similarly, digital signal Q 242 may be further filtered by a filter 321 to obtain a filtered signal 322. Thus, digital signals 312 and 322 only contain low-frequency components with undesired high-frequency components being eliminated by respective filters 311 and 321. It is noted that filtered signals 312 and 322 are interposed between the respective ADCs 218, 228 and the bank of N complex mixers 250.

Mixer 300, which represents one of the N complex mixers 250, includes four multipliers 313, 315, 323, and 325. Multipliers 313 and 315 multiply the filtered signal 312 with respective $\cos(\omega_{ci}t)$ and $\sin(\omega_{ci}t)$ signals and generate respective products 314 and 316. Similarly, multipliers 323 and 325 multiply the filtered Q signal 322 with respective $\cos(\omega_{ci}t)$ and $\sin(\omega_{ci}t)$ signals and generate respective products 324 and 326. An adder 317 sums the products 314 and 326 to generate a frequency-shifted signal I 318. An adder 327 sums the products 324 and 316 to generate a frequency-shifted signal Q 328. Basically, complex mixer 300 causes a frequency shift of the filtered components 312 and 322 to respective baseband signals 318 and 328 in the digital domain according to the operation:

$$Y(t)=X(t)*e^{-j\omega_c t} \tag{1}$$

or taken the Fourier transform, we obtain:

$$Y(\omega)=X(\omega-\omega_c) \tag{2}$$

Multipliers 313, 315, 323, and 325 are identical digital multipliers. In an embodiment, a numerically controlled oscillator with quadrature output generates the $\cos(\omega_{ci}t)$ and $\sin(\omega_{ci}t)$ signals. Numerically controlled oscillators (NCO) can be implemented using a phase accumulator and a look-up table. NCOs are known to those of skill in the art and will not be described herein. The frequency ω_{ci} is so chosen that each one of the desired channels embedded in the digital signals I 232 and Q 242 will be downshifted to the baseband. In the given example shown in FIG. 2, the bank of N complex mixers will have four complex mixers, each one of the N (i.e., four) complex mixers is coupled to an individual NCO having a distinct frequency ω_{ci} so that when mixing the filtered digital I and Q signals 312 and 322 with that frequency, each one of the complex mixers will generate the signals I (318) and Q (328) of a corresponding one of the desired channels at the baseband.

In an embodiment, baseband signals 318 and 328 are further individually filtered by respective filters 330 and 340 that are identified as one of the filters 260*a-n* in FIG. 2. Filters 330 and 340 may be band-pass or low-pass filters

having a narrow bandwidth equal to the bandwidth of a desired channel. In certain embodiments, filters **330** and **340** can be analog passive or active low-pass or complex band-pass filters such as polyphase filters. In another embodiment, filters **330** and **340** can be digital low-pass filters, such as finite impulse response (FIR) filters to eliminate high frequency components that may be aliased back to the baseband signals Ii (**332**) and Qi (**342**) when decimated by subsequent decimator **350**.

The reduced sampling rate of the N desired baseband channels will be sent as a serial or parallel digital data stream to a demodulator using a serial or parallel data interface according to commonly known methods, as shown in FIG. **2**. This approach provides several advantages over conventional tuner architectures. First, it eliminates the need of expensive data conversion, filtering and channel selection on the demodulator side. Second, it removes undesired channels from the signal path at an early stage, thus relieves the large dynamic range requirement in the demodulator.

FIG. **4** shows a simplified schematic block diagram of a wideband receiver system **400** according to another embodiment of the present invention. Wideband receiver system **400** includes a radio front end **410**, a digital front end **430**, a tiled up-conversion module **450**, and a summing digital-to-analog converter module DAC **470**. Radio front end **410** includes a low noise amplifier LNA**1** that receives an RF input signal **102** and provides an amplified RF signal **403** to mixers M**1** **411** and M**2** **421**. Mixer M**1** **411** is coupled to an oscillator frequency **405** of a synthesizer S**1** whereas mixer M**2** **421** is coupled with the oscillator frequency **405** via a phase shifter P**1** **406** that generates a 90° degree phase-shift to the oscillator frequency **405**. Mixers M**1** **411** and M**2** **421** generate respective in-phase signal **412** and quadrature signal **422** that are further amplified by respective amplifiers V**1** **413** and V**2** **423**. The amplified in-phase and quadrature signals **414**, **424** are then filtered by filters F**1** **415** and F**2** **425** to eliminate undesired frequency components that would be aliased back to the in-phase and quadrature signals when digitally sampled by subsequent analog-to-digital converters ADC**1** **418** and ADC**2** **428**. Digital signals I **422** and Q **442** at the input of digital front end **430** are digital representations of the filtered analog in-phase and quadrature signals **416**, **426** before the ADCs. Digital front end **430** include a bank of N complex mixers **432** comprising **432***a* to **432***n* identical mixers, where N is an integer value corresponding to the number of the desired channels located in non-contiguous portions of the frequency spectrum. Each of the N complex mixers **432***a* to **432***n* frequency down-converts signals I **432** and Q **442** to an associated baseband. Each of the frequency down-converted I and Q signals are coupled to respective low-pass, band-pass, or decimating filters **434**. In this regard, the radio front end **410** and the digital front end **430** are similar to respective radio front end **210** and digital front end **230** of FIG. **2** that have been described in detail above.

In an alternative embodiment of the present invention, the N filtered and decimated channels **438***a* to **438***n* (where indices a to n correspond to the associated number of desired channels) are not provided to a demodulator for demodulation. Instead, the N filtered and decimated channels **438***a* to **438***n* are further frequency up-converted to an intermediate frequency (IF) spectrum. In order to achieve that, the N filtered and decimated channels are coupled to a tiled up-conversion module **450** that includes a bank of N complex up-mixers, where N is an integer value correspond to the number of desired received channels. The N complex up-mixers include identical digital mixers **452***a* to **452***n* that will be described further in detail below with reference to FIG. **5**. The N up-shifted channels are then filtered by a subsequent bank of channel filters **454** that, in an embodiment, comprises N individual finite impulse response (FIR) filters. The N filtered channels are then digitally combined and converted to the analog domain by a summing digital-to-analog converter module DAC **470**. The N up-shifted channels are adjacent to each other and form a contiguous or substantially-contiguous set of channels **475** in the IF spectrum centered around f_{if} as illustrated in FIG. **4**. In an embodiment, the spectra of the mixed products are spaced in such a way so as to avoid overlap with known frequency bands containing potential or actual interferers. In another embodiment, the spectra of the mixed products are spaced in such a way so as to avoid overlap with frequency bands that might introduce interference to other systems. In general, because the bandwidth BW_2 is substantially lower than BW_1, the IF frequency f_{if} can be set proportionally lower, e.g., typically about 16 MHz to accommodate the spectrum of BW**2** of up to 32 MHz (corresponding to the total bandwidth of the four desired channels, each having a bandwidth of 8 MHz in this example).

The up-conversion approach of FIG. **4** provides several advantages over conventional tuner architectures. First, it allows the demodulator to operate the data converter at a lower data rate and with lower resolution (fewer bits) due to the fact that the contiguous channels have a narrower bandwidth. Second, the up-conversion approach provides full compatibility with existing demodulators that require an analog IF signal. Third, it removes undesired channels from the signal path at an early stage, thus relieves the requirement of a high dynamic range requirement of the demodulator's analog-to-digital converter and the demodulator itself.

FIG. **5** shows a simplified exemplary circuit diagram of a complex up-mixer **500** according to an embodiment of the present invention. Up-mixer **500** is one of the N complex up-mixers **452***a* to **452***n* in tiled up-conversion module **450** shown in FIG. **4**. Up-mixer **500** includes filter **510** and **520** configured to eliminate unwanted frequency components present in respective input signals I **501** and Q **502**. Filtered signals **512** and **522** are provided to up-mixers UMI **515** and UMQ **525** that multiply the filtered signals **512** and **522** with respective $\cos(\omega_u t)$ and $\sin(\omega_u t)$. The products **516** and **526** are summed in an adder **530** to generate an IF signal **532** according to the following equation:

$$\mathrm{IF}(t)=I(t)*\cos(\omega_u t)+Q(t)*\sin(\omega_u t) \quad (3)$$

Up-mixers UMI **515** and UMQ **525** are identical digital multipliers that multiply the respective filtered signal **512** and **522** with a cosine function **505** and a sine function **506** that can be generated from a NCO using a digital phase accumulator and a look-up table.

As described above, TV channels are grouped into multiple frequency bands in North America. For example, channels 2 through 6 are grouped in VHF-low band (aka band I in Europe), channels 7 through 13 in VHF-high band (band III), and channels 14 through 69 in UHF band (bands IV and V). In order to receive such a wide frequency spectrum, the low noise amplifier and mixer must have very low noise, wide tuning range and high linearity as described above in the wideband receiver systems **200** and **400**. However, a wideband receiver having a single tuner with high sensitivity may have a high power consumption. For certain applications, it may be advantageous to use multiple tuners that are optimized for a given frequency band, such as a dedicated tuner for the low VHF band, another dedi-

cated tuner for the high VHF band and the UHF band, and yet other dedicated tuners for receiving the digital video broadcasting (DVB) via satellite (DVB-S), via cable (DVB-C), or terrestrial digital video broadcasting (DVB-T). The multi-tuner approach may also be advantageously applied to cable networks that carry TV programs on an 88 MHz to 860 MHz according to the Data Over Cable Service Interface Specification (DOCSIS) protocol.

FIG. **6** shows a simplified schematic block diagram of a wideband multi-tuner receiver system **600** according to an embodiment of the present invention. In an embodiment, multi-tuner system **600** includes low noise amplifier A**1** **602** for receiving an RF input signal **601**. Amplifier A**1** **602** is coupled to at least a tuner**1** **610** and a tuner**2** **720**. In another embodiment, multi-tuner system **600** may not include amplifier **602** so that RF input signal **601** can be received directly at each tuner **610** and **720**.

Tuner**1** **610** includes an amplifying filter AF**1** **613** that filters and amplifies a first portion BWtuner**1** **604** of a broad frequency spectrum **608** that contains a first plurality of RF channels **606** including desired channels **607** having respective channel frequencies f_{rf1} and f_{rf2}. The first portion of the broad frequency spectrum BWtuner**1** **604** is then frequency down-converted to a low-IF or zero-IF in-phase signal I**1** **612** and a quadrature signal Q**1** **622** through respective mixer M**1** **611** and M**2** **621**. Signals I**1** **612** and Q**1** **622** are further amplified and low-pass filtered before applying to respective analog-to-digital converters ADC**1** **618** and ADC**2** **628** that convert analog signals Ia**1** **616** and Qa**1** **626** to respective digital in-phase signal Id**1** **631** and digital quadrature signal Qd**1** **641**. Because tuner**1** **610** only covers a portion BWtuner**1** **604** of the entire frequency spectrum **608** having fewer channels, the ADC**1** **618** and ADC**2** **628** can be slower-speed analog-to-digital converters with a large number of bits, i.e., large dynamic range.

Digital signals Id**1** **631** and Qd**1** **641** are then provided to a digital front end DFE **630** that includes a first bank of N complex mixers **632** and channel and decimating filters **634**. The first bank of N complex filters **632** has N identical complex mixers, where N is an integer value equal to the number of desired channels located in the first portion BWtuner**1** **604** of the broad frequency spectrum **608**. In an embodiment, each one of the first bank of N complex mixers includes four digital mixers that multiply digital stream Id**1** **631** and Qd**1** **641** with respective digitized cosine function and sine function to generate the sum and difference frequency components, as shown in FIG. **3**. The digitized cosine and sine frequency, i.e., the mixer frequency is so chosen so that when mixing signals Id**1** **631** and Qd**1** **641** will move them to a baseband or a low-IF band. In an embodiment, channel and decimating filters have similar structures as filters **330** and **340** and demodulator **350** as shown in FIG. **3**. That is, channel and decimating filters include digital low-pass filters **330** and **340** that eliminates unwanted high frequency components of the baseband signals I and Q prior to applying them to a decimator **350** (FIG. **3**) that reduces the sample frequency without any loss of information since Id**1** **631** and Qd**1** **641** are sampled at a much higher frequency by the respective ADC**1** **618** and ADC**2** **628**.

The decimated desired channels are then provided to an up-converter module **650** that includes a bank of N up-mixers. The bank of N up-mixers includes N identical up-mixers whose structure is shown in FIG. **5**. In an embodiment, N is an integer value equal to the number of desired channels present in BWtuner**1** **604**. Each one of the up-mixer frequency-shifts the baseband signals I and Q of each one of the desired channels to an appropriate portion of the intermediate frequency band according to Equation (3). In other words, the bank of N up-mixers is "frequency multiplexing" the desired channels onto a first portion **682** of an IF band **686**.

Similarly, tuner**2** **720** includes an amplifying filter AF**2** **713** that is configured to receive a second portion BWtuner**2** **704** of the broad frequency spectrum **608**. The second portion **704** contains a second plurality of RF channels **706** including a second number of desired channels. In the exemplary illustration of FIG. **6**, the second portion **704** has a frequency bandwidth of BWtuner**2** that contains desired channels **707** having respective channel frequencies f_{rf3} and f_{rf4}. Tuner**2** **720** includes elements such as mixers M**3** **711**, M**4** **721**, amplifiers V**3** **714**, V**4** **724**, filters F**3** **715**, F**4** **725** and analog-to-digital converters ADC**3** **731** and ADC**4** **741** that are substantially the same as the like-named elements of the signal path of tuner**1** **610**. Thus, redundant description is omitted herein.

Digital in-phase signal Id**2** **731** and digital quadrature signal Qd**2** **741** are then provided to digital front end **740**. Digital front end **740** includes a bank of L complex filters, where L is an integer value equal to the number of desired channels in the second portion BWtuner**2** **704** of the broad frequency spectrum **608**. Each one of the bank of L complex filters is a digital complex mixer configured to transform the signals Id**2** **731** and Qd**2** **741** to baseband signals that are further filtered by individual digital low-pass filters such as FIR filters before decimated by a subsequent decimator. The elements of digital front end **740** are substantially similar to those described in digital front end **630**. Thus, redundant description is omitted herein.

The decimated baseband I and Q channels are further provided to a subsequent up-conversion module **760** that performs a function substantially similar to that of the up-conversion module **650** already described above. The outputs of up-conversion module **650** and **760** can be tiled to generate a contiguous set of IF frequencies **682**, **684** centered at f_{if} **686**. In an embodiment, the outputs of up-conversion module **650** and **760** are digitally summed and converted to an analog signal by summing DAC **670**. In another embodiment, the up-conversion modules **650** and **760** and the digital summing function **672** can be performed using an inverse discrete Fourier transform or an inverse Fast Fourier transform operation.

The multi-tuner architecture provides the flexibility that multiple commercially available tuners can be used without the need of designing a wideband tuner. For example, a tuner designed for a terrestrial broadcast digital TV can be used together with a tuner dedicated to receiving a cable signal and/or a tuner for receiving a satellite broadcast signal. The multi-tuner receiver system provides an additional advantage that other tuners can be added quickly to the system to accommodate any future applications. Additionally, the multi-tuner architecture allows the use of slower speed (i.e., lower cost) analog-to-digital converters with a larger number of bits for achieving large dynamic range.

FIG. **7** shows a block diagram of an exemplary digital front end of the invention in more detail. In an embodiment, in-phase signal Id**2** **731** and quadrature signal Qd**2** **741** at the output of respective ADC converters **718** and **728** are provided to each of the L complex mixers **732** comprising mixers **732**A to **732**L. A more detailed description of each of L complex mixers is shown in FIG. **3**. Mixer **732**A multiplies Id**2** **731** and Qd**2** **741** with a cosine signal and a sine signal that are generated from an NCO**1** and produces an I-**732**A signal and a Q-**732**A signal that are further individu-

ally filtered by an FIR filter before decimating. The bank of L complex mixers corresponds to the block **732** in FIG. **6**; and the set of FIR filters and decimator corresponds to the block **734** in FIG. **6**. Each decimated pair of I-**732***i*/M in the baseband, where the index "i" is from A to L, is further provided to a subsequent up-mixer for frequency-shifting to an intermediate frequency as shown in FIG. **8**.

FIG. **8** shows an exemplary embodiment of a bank of L complex up-mixers according to the present invention. Each decimated pair of complex signals I-**732***i*/M and Q-**732***i*/M is provided to an associated complex up-mixer, whose frequency is so chosen that when mixing with the pair of complex signals I-**732***i*/M and Q-**732***i*/M will generate an associated channel at a predetermined sub-portion of the intermediate frequency band **686** (FIG. **6**). A more detailed schematic block of one of the L up-mixers is described above together with FIG. **5**.

FIG. **9** is a simplified block diagram of a wideband multi-tuner receiver system **900** according to an embodiment of the present invention. In an embodiment, system **900** includes a crossbar switch **910** having at least an input terminal **912** configured to receive signals from an analog-to-digital converter (ADC) **912** and an input terminal **922** configured to receive signals from an ADC **922**. Crossbar switch **910** also includes an output terminal **924** that is coupled to a digital front end **930**. In an embodiment, input terminals **912** and **922** of crossbar switch **910** have P inputs, where P is an integer value that is equal to the total number of desired channels received by tuner**1** **610** and tuner**2** **720**. Output terminal **924** of crossbar switch **910** have Q outputs, where Q is an integer value that is equal to the total number of desired channels received by tuner**1** **610** and tuner**2** **720**.

In an embodiment, digital front end **930** may include a bank of R complex mixers that frequency shifts the received channels to a baseband. Digital front end **930** may combine digital front end **630** and **740** shown in FIG. **6**. Similarly, a tiled up-conversion module **950** may include up-converter modules **650** and **760** of FIG. **6**.

System **900** further includes a summing DAC that operates similarly as summing DAC **470** and **670** that have been described in detail in relation with respective FIG. **4** and FIG. **6** above. Thus, redundant description is omitted herein.

FIG. **10** is a simplified block diagram of a wideband multi-tuner receiver system **1000** according to another embodiment of the present invention. System **1000** includes at least tuner**1** **610** coupled with digital front end **630** through an analog-to-digital converter **620** and tuner**2** **720** coupled with digital front end **740** through an analog-to-digital converter **730**. System **1000** further includes a crossbar switch **1010** that is interposed between digital front ends **630**, **740** and up-conversion modules **650**, **760**. Crossbar switch **1010** includes an input terminal **1012** having S inputs coupled with DFE **630** and an input terminal **1022** having T inputs coupled with DFE **740**. In an embodiment, S is an integer value equal to the number of desired channels processed in DFE **630** and T is an integer value equal to the number of desired channels processed in DFE **740**. Crossbar switch **1010** further includes an output terminal **1024** having U outputs coupled with up-converter module **650** and an output terminal **1024** having V outputs coupled with up-converter module **760**. In an embodiment, the total number of the outputs U and V is equal to the sum of the inputs S and T. Thus, crossbar switch **1010** allows the routing of any channel from either DFE **630** or DFE **740** to up-converters **650** or **760**. It is understood that system **1000** is not as flexible as system **900** because DFE **630** and DFE **740** are already pre-assigned to respective tuner**1** (**610**) and tuner**2** (**720**). However, this pre-assigned arrangement allows a simpler implementation of crossbar switch **1010** that operates at lower speeds.

While several embodiments in accordance with the present invention have been described, it is to be understood that the above description is intended to be illustrative and not restrictive. Many embodiments will be apparent to those of skill in the art upon reviewing the above description. The scope of the invention should, therefore, be determined not with reference to the above description, but instead should be determined with reference to the appended claims along with their full scope of equivalents.

What is claimed is:

1. A cable television (TV) device comprising:

a wideband analog-to-digital converter (ADC) configured to digitize a contiguous band of frequencies in an input signal, wherein the contiguous band of frequencies comprises a plurality of desired channels and a plurality of undesired channels; and

a digital frontend (DFE) coupled to the wideband ADC, wherein the DFE is configured to concurrently select and provide each of the plurality of desired channels, via a serial interface, without providing any of the plurality of undesired channels.

2. The cable TV device of claim **1**, wherein:

the cable TV device comprises a cable network connector, and

the input signal is operably communicated from the cable network connector to the wideband ADC via at least one of an analog amplifier and an analog filter.

3. The cable TV device of claim **1**, wherein:

the DFE comprises a plurality of mixers, and

each mixer, of the plurality of mixers, is operable to generate a corresponding complex signal comprising an in-phase (I) component and a quadrature (Q) component.

4. The cable TV device of claim **3**, wherein:

the I and Q components of each corresponding complex signal are at baseband.

5. The cable TV device of claim **3**, wherein:

the DFE comprises a plurality of filters, and

each filter, of the plurality of filters, is operable to filter the corresponding complex signal comprising a 6 MHz channel.

6. The cable TV device of claim **3**, wherein:

the DFE comprises a plurality of digital demodulators, and

each digital demodulator, of the plurality of digital demodulators, is operable to demodulate the corresponding complex signal.

7. The cable TV device of claim **1**, wherein:

the DFE comprises a plurality of digital demodulators, and

each digital demodulator, of the plurality of digital demodulators, is operable to demodulate a desired channel, of the plurality of desired channels.

8. The cable TV device of claim **7**, wherein:

the DFE is operable to provide a plurality of demodulated desired channels via a parallel interface.

9. The cable TV device of claim **1**, wherein:

the plurality of desired channels comprises at least one cable broadcast channel.

10. The cable TV device of claim **1**, wherein:

the plurality of desired channels comprises at least one channel delivered via a Data Over Cable Service Interface Specification (DOCSIS) protocol.

11. The cable TV device of claim 1, wherein:
the cable TV device comprises a digital video recorder (DVR).
12. The cable TV device of claim 1, wherein:
the cable TV device is operable to configure at least some of the plurality of desired channels as an output for a picture-in-picture display.
13. The cable TV device of claim 1, wherein:
the contiguous band of frequencies comprises a portion of a frequency spectrum of the input signal.
14. A cable TV device comprising:
a wideband analog-to-digital converter (ADC) configured to digitize an input signal, wherein the input signal comprises a plurality of desired channels and a plurality of undesired channels; and
a plurality of digital down converters coupled to the wideband ADC, wherein each digital down converter, of the plurality of digital down converters, is operable to generate a digital channel output corresponding to each desired channel, of the plurality of desired channels, and wherein the plurality of digital down converters is operable to provide each digital channel output via a serial interface.
15. The cable TV device of claim 14, wherein:
the cable TV device comprises a cable network connector, and
the input signal is operably communicated from the cable network connector to the wideband ADC via at least one of an analog amplifier and an analog filter.
16. The cable TV device of claim 14, wherein:
each digital down converter comprises a digital mixer operable to generate a corresponding complex signal comprising an in-phase (I) component and a quadrature (Q) component.
17. The cable TV device of claim 16, wherein:
the I and Q components of each corresponding complex signal are at baseband.
18. The cable TV device of claim 16, wherein:
each digital down converter comprises a filter operable to select the corresponding complex signal comprising a 6 MHz channel.
19. The cable TV device of claim 16, wherein:
each digital down converter comprises a digital demodulator operable to demodulate the corresponding complex signal to provide a demodulated channel as the digital channel output.
20. The cable TV device of claim 14, wherein:
each digital down converter comprises a digital demodulator operable to demodulate a desired channel, of the plurality of desired channels, to provide a demodulated channel as the digital channel output.
21. The cable TV device of claim 20, wherein:
the plurality of digital down converters is operable to provide a plurality of demodulated desired channels via a parallel interface.
22. The cable TV device of claim 14, wherein:
the plurality of desired channels comprises at least one cable broadcast channel.
23. The cable TV device of claim 14, wherein:
the plurality of desired channels comprises at least one channel delivered via a Data Over Cable Service Interface Specification (DOCSIS) protocol.
24. The cable TV device of claim 14, wherein:
the cable TV device comprises a digital video recorder (DVR).
25. The cable TV of claim 14, wherein:
the cable TV device is operable to provide a picture-in-picture display according to the plurality of digital channel outputs.
26. The cable TV device of claim 14, wherein:
the plurality of desired channels and the plurality of undesired channels comprise a portion of a frequency spectrum of the input signal.
27. A cable television (TV) device comprising:
a wideband analog-to-digital converter (ADC) configured to digitize a contiguous band of frequencies in an input signal, wherein the contiguous band of frequencies comprises a plurality of desired channels and a plurality of undesired channels; and
a digital frontend (DFE) coupled to the wideband ADC, wherein the DFE is configured to concurrently select and provide each of the plurality of desired channels without providing any of the plurality of undesired channels, and wherein the cable TV device comprises a digital video recorder (DVR).
28. The cable TV device of claim 27, wherein:
the cable TV device comprises a cable network connector, and
the input signal is operably communicated from the cable network connector to the wideband ADC via at least one of an analog amplifier and an analog filter.
29. The cable TV device of claim 27, wherein:
the DFE comprises a plurality of mixers, and
each mixer, of the plurality of mixers, is operable to generate a corresponding complex signal comprising an in-phase (I) component and a quadrature (Q) component.
30. The cable TV device of claim 29, wherein:
the I and Q components of each corresponding complex signal are at baseband.
31. The cable TV device of claim 29, wherein:
the DFE comprises a plurality of filters, and
each filter, of the plurality of filters, is operable to filter the corresponding complex signal comprising a 6 MHz channel.
32. The cable TV device of claim 29, wherein:
the DFE comprises a plurality of digital demodulators, and
each digital demodulator, of the plurality of digital demodulators, is operable to demodulate the corresponding complex signal.
33. The cable TV device of claim 27, wherein:
the DFE comprises a plurality of digital demodulators, and
each digital demodulator, of the plurality of digital demodulators, is operable to demodulate a desired channel, of the plurality of desired channels.
34. The cable TV device of claim 33, wherein:
the DFE is operable to provide a plurality of demodulated desired channels via a parallel interface.
35. The cable TV device of claim 27, wherein:
the DFE is operable to provide the plurality of desired channels via a parallel interface.
36. The cable TV device of claim 27, wherein:
the DFE is operable to provide the plurality of desired channels via a serial interface.
37. The cable TV device of claim 27, wherein:
the plurality of desired channels comprises at least one cable broadcast channel.

38. The cable TV device of claim 27, wherein:
the plurality of desired channels comprises at least one channel delivered via a Data Over Cable Service Interface Specification (DOCSIS) protocol.

39. The cable TV device of claim 27, wherein:
the cable TV device is operable to configure at least some of the plurality of desired channels as an output for a picture-in-picture display.

40. The cable TV device of claim 27, wherein:
the contiguous band of frequencies comprises a portion of a frequency spectrum of the input signal.

41. A cable TV device comprising:
a wideband analog-to-digital converter (ADC) configured to digitize an input signal, wherein the input signal comprises a plurality of desired channels and a plurality of undesired channels; and
a plurality of digital down converters coupled to the wideband ADC, wherein each digital down converter, of the plurality of digital down converters, is operable to generate a digital channel output corresponding to each desired channel, of the plurality of desired channels, and wherein the cable TV device comprises a digital video recorder (DVR).

42. The cable TV device of claim 41, wherein:
the cable TV device comprises a cable network connector, and
the input signal is operably communicated from the cable network connector to the wideband ADC via at least one of an analog amplifier and an analog filter.

43. The cable TV device of claim 41, wherein:
each digital down converter comprises a digital mixer operable to generate a corresponding complex signal comprising an in-phase (I) component and a quadrature (Q) component.

44. The cable TV device of claim 43, wherein:
the I and Q components of each corresponding complex signal are at baseband.

45. The cable TV device of claim 43, wherein:
each digital down converter comprises a filter operable to select the corresponding complex signal comprising a 6 MHz channel.

46. The cable TV device of claim 43, wherein:
each digital down converter comprises a digital demodulator operable to demodulate the corresponding complex signal to provide a demodulated channel as the digital channel output.

47. The cable TV device of claim 41, wherein:
each digital down converter comprises a digital demodulator operable to demodulate a desired channel, of the plurality of desired channels, to provide a demodulated channel as the digital channel output.

48. The cable TV device of claim 47, wherein:
the plurality of digital down converters is operable to provide a plurality of demodulated desired channels via a parallel interface.

49. The cable TV device of claim 41, wherein:
the plurality of digital down converters is operable to provide a plurality of digital channel outputs, comprising each digital channel output, via a parallel interface.

50. The cable TV device of claim 41, wherein:
the plurality of digital down converters is operable to provide each digital channel output via a serial interface.

51. The cable TV device of claim 41, wherein:
the plurality of desired channels comprises at least one cable broadcast channel.

52. The cable TV device of claim 41, wherein:
the plurality of desired channels comprises at least one channel delivered via a Data Over Cable Service Interface Specification (DOCSIS) protocol.

53. The cable TV of claim 41, wherein:
the cable TV device is operable to provide a picture-in-picture display according to the plurality of digital channel outputs.

54. The cable TV device of claim 41, wherein:
the plurality of desired channels and the plurality of undesired channels comprise a portion of a frequency spectrum of the input signal.

55. A cable television (TV) device comprising:
a wideband analog-to-digital converter (ADC) configured to digitize a contiguous band of frequencies in an input signal, wherein the contiguous band of frequencies comprises a plurality of desired channels and a plurality of undesired channels; and
a digital frontend (DFE) coupled to the wideband ADC, wherein the DFE is configured to concurrently select and provide each of the plurality of desired channels without providing any of the plurality of undesired channels, and wherein the cable TV device is operable to configure at least some of the plurality of desired channels as an output for a picture-in-picture display.

56. The cable TV device of claim 55, wherein:
the cable TV device comprises a cable network connector, and
the input signal is operably communicated from the cable network connector to the wideband ADC via at least one of an analog amplifier and an analog filter.

57. The cable TV device of claim 55, wherein:
the DFE comprises a plurality of mixers, and
each mixer, of the plurality of mixers, is operable to generate a corresponding complex signal comprising an in-phase (I) component and a quadrature (Q) component.

58. The cable TV device of claim 57, wherein:
the I and Q components of each corresponding complex signal are at baseband.

59. The cable TV device of claim 57, wherein:
the DFE comprises a plurality of filters, and
each filter, of the plurality of filters, is operable to filter the corresponding complex signal comprising a 6 MHz channel.

60. The cable TV device of claim 57, wherein:
the DFE comprises a plurality of digital demodulators, and
each digital demodulator, of the plurality of digital demodulators, is operable to demodulate the corresponding complex signal.

61. The cable TV device of claim 55, wherein:
the DFE comprises a plurality of digital demodulators, and
each digital demodulator, of the plurality of digital demodulators, is operable to demodulate a desired channel, of the plurality of desired channels.

62. The cable TV device of claim 61, wherein:
the DFE is operable to provide a plurality of demodulated desired channels via a parallel interface.

63. The cable TV device of claim 55, wherein:
the DFE is operable to provide the plurality of desired channels via a parallel interface.

64. The cable TV device of claim 55, wherein:
the DFE is operable to provide the plurality of desired channels via a serial interface.

65. The cable TV device of claim **55**, wherein:

the plurality of desired channels comprises at least one cable broadcast channel.

66. The cable TV device of claim **55**, wherein:

the plurality of desired channels comprises at least one channel delivered via a Data Over Cable Service Interface Specification (DOCSIS) protocol.

67. The cable TV device of claim **55**, wherein:

the cable TV device comprises a digital video recorder (DVR).

68. The cable TV device of claim **55**, wherein:

the contiguous band of frequencies comprises a portion of a frequency spectrum of the input signal.

69. A cable TV device comprising:

a wideband analog-to-digital converter (ADC) configured to digitize an input signal, wherein the input signal comprises a plurality of desired channels and a plurality of undesired channels; and

a plurality of digital down converters coupled to the wideband ADC, wherein each digital down converter, of the plurality of digital down converters, is operable to generate a digital channel output corresponding to each desired channel, of the plurality of desired channels, and wherein the cable TV device is operable to provide a picture-in-picture display according to the plurality of digital channel outputs.

70. The cable TV device of claim **69**, wherein:

the cable TV device comprises a cable network connector, and

the input signal is operably communicated from the cable network connector to the wideband ADC via at least one of an analog amplifier and an analog filter.

71. The cable TV device of claim **69**, wherein:

each digital down converter comprises a digital mixer operable to generate a corresponding complex signal comprising an in-phase (I) component and a quadrature (Q) component.

72. The cable TV device of claim **71**, wherein:

the I and Q components of each corresponding complex signal are at baseband.

73. The cable TV device of claim **71**, wherein:

each digital down converter comprises a filter operable to select the corresponding complex signal comprising a 6 MHz channel.

74. The cable TV device of claim **71**, wherein:

each digital down converter comprises a digital demodulator operable to demodulate the corresponding complex signal to provide a demodulated channel as the digital channel output.

75. The cable TV device of claim **69**, wherein:

each digital down converter comprises a digital demodulator operable to demodulate a desired channel, of the plurality of desired channels, to provide a demodulated channel as the digital channel output.

76. The cable TV device of claim **75**, wherein:

the plurality of digital down converters is operable to provide a plurality of demodulated desired channels via a parallel interface.

77. The cable TV device of claim **69**, wherein:

the plurality of digital down converters is operable to provide a plurality of digital channel outputs, comprising each digital channel output, via a parallel interface.

78. The cable TV device of claim **69**, wherein:

the plurality of digital down converters is operable to provide each digital channel output via a serial interface.

79. The cable TV device of claim **69**, wherein:

the plurality of desired channels comprises at least one cable broadcast channel.

80. The cable TV device of claim **69**, wherein:

the plurality of desired channels comprises at least one channel delivered via a Data Over Cable Service Interface Specification (DOCSIS) protocol.

81. The cable TV device of claim **69**, wherein:

the cable TV device comprises a digital video recorder (DVR).

82. The cable TV device of claim **69**, wherein:

the plurality of desired channels and the plurality of undesired channels comprise a portion of a frequency spectrum of the input signal.

* * * * *