Trials@uspto.gov
571-272-7822

Paper 46
Date: October 1, 2025

UNITED STATES PATENT AND TRADEMARK OFFICE

BEFORE THE PATENT TRIAL AND APPEAL BOARD

COMCAST CABLE COMMUNICATIONS, LLC,
Petitioner,

v.

ENTROPIC COMMUNICATIONS, LLC,
Patent Owner.

IPR2024-00438
Patent 11,399,206 B2

Before MICHELLE N. WORMMEESTER, JON M. JURGOVAN, and FREDERICK C. LANEY, *Administrative Patent Judges*.

WORMMEESTER, *Administrative Patent Judge*.

JUDGMENT
Final Written Decision
Determining All Challenged Claims Unpatentable
35 U.S.C. § 318(a)

I. INTRODUCTION

Comcast Cable Communications, LLC ("Petitioner") filed a Petition (Paper 2, "Pet.") requesting *inter partes* review of claims 1–76 of U.S. Patent No. 11,399,206 B2 (Ex. 1001, "the '206 patent"). Entropic Communications, LLC ("Patent Owner") filed a Preliminary Response (Paper 10). Pursuant to 35 U.S.C. § 314, we instituted an *inter partes* review of all challenged claims based on all asserted challenges in the Petition. Paper 14 ("Inst. Dec."). Thereafter, Patent Owner filed a Response (Paper 24, "PO Resp.") to the Petition, Petitioner filed a Reply (Paper 29, "Pet. Reply"), and Patent Owner filed a Sur-reply (Paper 34, "PO Sur-reply"). On July 18, 2025, we conducted an oral hearing. A copy of the transcript (Paper 43) is in the record.

We have jurisdiction under 35 U.S.C. § 6(b). This Final Written Decision is issued pursuant to 35 U.S.C. § 318(a). For the reasons that follow, we determine that Petitioner has shown by a preponderance of the evidence that claims 1–76 of the '206 patent are unpatentable.

II. BACKGROUND

A. Related Proceedings

The parties identify various federal district court cases and petitions for *inter partes* review. *See* Pet. viii–ix; Paper 4, 1–4 (Patent Owner's Mandatory Notices); Paper 28, 1–2 (Patent Owner's Third Updated Mandatory Notices).

B. The ’206 Patent

The ’206 patent describes “wideband receiver systems that are capable of receiving multiple desired television channels that extend over multiple non-contiguous portions of the broad frequency spectrum and grouping them into a contiguous, or substantially-contiguous, frequency spectrum.” Ex. 1001, 1:30–35. To illustrate one exemplary embodiment, Figure 2 of the ’206 patent is reproduced below.

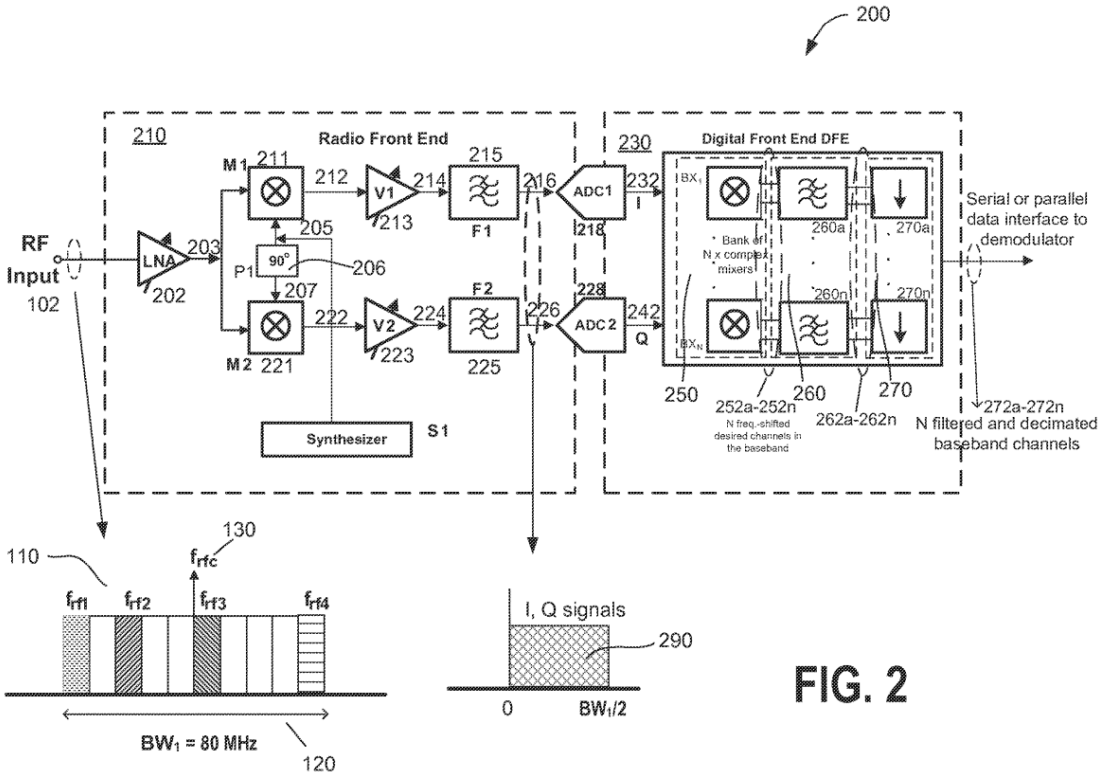

FIG. 2

Figure 2 is a block diagram of wideband receiver system 200 that includes radio front end 210, analog-to-digital convertors 218 (ADC1) and 228 (ADC2), and digital front end 230. *Id.* at 4:35–38, 5:33–35, Fig. 2. System 200 receives and processes channels 110, which are located in a radio frequency (RF) spectrum with frequency bandwidth 120 (BW1). *Id.* at 2:13–15, 4:39–42. There are ten available channels in bandwidth 120, where each channel occupies 8 MHz of bandwidth for a total of 80 MHz. *Id.*

at 4:42–45. Of these available channels, there are four desired channels with respective carrier frequencies f_{rf1}, f_{rf2}, f_{rf3}, and f_{rf4} that are located in noncontiguous portions of bandwidth 120. *Id.* at 4:47–51.

Radio front end 210 is a wideband tuner receiver that includes low noise amplifier 202 (LNA), mixers 211 (M1) and 221 (M2), amplifiers 213 (V1) and 223 (V2), as well as filters 215 (F1) and 225 (F2). Ex. 1001, 4:39–5:32. Digital front end 230 includes N complex mixers 250, where N is the number of desired channels located in the noncontiguous portions of bandwidth 120. *Id.* at 5:51–55, Fig. 2. In Figure 2's example, N represents four desired RF channels. *Id.* at 5:63–65. Digital front end 230 also includes filter modules 260a–260n and demodulators 270a–270n. *Id.* at 6:6–12, Fig. 2.

In operation, radio front end 210's low noise amplifier 202 receives RF input signal 102, which includes the four desired RF channels. Ex. 1001, 4:45–51. Mixers 211 and 221 multiply (mix) amplified RF signal 203 with respective first oscillator frequency signal 205 and second oscillator frequency signal 207 to generate in-phase signal 212 and quadrature signal 222, which have a phase shift of ninety degrees between them. *Id.* at 4:61–66. Signals 212 and 222 are further amplified by respective amplifiers 213 and 223 to generate signals 214 and 224, which are then filtered by respective filters 215 and 225 to generate filtered in-phase signal 216 and filtered quadrature signal 226. *Id.* at 5:17–20, Fig. 2.

After being processed in radio front end 210, filtered signals 216 and 226 are digitized for further processing in digital front end 230. Ex. 1001, 5:20–24. ADC1 218 generates digital in-phase signal 232 (I), which is a digital representation of analog filtered signal 216, and ADC2 228 generates

digital quadrature signal 242 (Q), which is a digital representation of analog filtered signal 226. *Id.* at 5:48–51.

In digital front end 230, each complex mixer 250 receives digital signals 232 and 242 from ADC1 218 and ADC2 228 to extract a different desired channel, and then frequency-shifts (downshifts) the extracted signal to the baseband frequency. Ex. 1001, 6:3–6, 6:53–56. Frequency-shifted channels 252a–252n are filtered by associated filter modules 260a–260n. *Id.* at 6:6–8. Next, filtered channels 262a–262n are decimated and sent to associated demodulators 270a–270n that extract the original information transmitted in each desired channel. *Id.* at 6:8–14. The decimated baseband channels may be sent as a serial or parallel digital data stream to a demodulator using a serial or parallel data interface. *Id.* at 7:10–14, Fig. 2.

According to the ’206 patent, its approach “eliminates the need of expensive data conversion, filtering and channel selection on the demodulator side,” and “removes undesired channels from the signal path at an early stage, thus reliev[ing] the large dynamic range requirement in the demodulator.” Ex. 1001, 7:14–19.

C. Illustrative Claims

Petitioner challenges claims 1–76 of the ’206 patent. Claims 1, 13, 25, 38, 51, and 64 are independent. Claims 1 and 13 are reproduced below.

1. A method for receiving a television (TV) signal comprising:

   receiving an input signal from a cable network;

   digitizing a contiguous band of frequencies in the input signal via a wideband analog-to-digital converter (ADC), wherein the contiguous band of frequencies comprises all received channels that exist in the input signal and the

received channels comprise a plurality of desired channels and a plurality of undesired channels;

concurrently selecting each of the plurality of desired channels from the input signal without selecting any of the plurality of undesired channels; and

providing the plurality of desired channels via a serial interface.

13. A method comprising:

receiving an input signal from a cable network;

digitizing all received channels in the input signal via wideband analog-to-digital converter (ADC), wherein the received channels comprise a plurality of desired channels and a plurality of undesired channels;

digitally down converting each desired channel, of the plurality of desired channels, to generate a plurality of digital channel outputs; and

providing the plurality of digital channel outputs via a serial interface.

Ex. 1001, 12:15–28, 13:5–15.

D. Asserted Challenges to Unpatentability

Petitioner asserts the following eight challenges to claims 1–76 of the ’206 patent. Pet. 12–13, 19–75. We instituted *inter partes* review on each challenge. Inst. Dec. 34.

Claim(s) Challenged	35 U.S.C. §	Reference(s)/Basis
1, 3–7, 9, 11, 13, 15–19, 21, 23, 25, 27–31, 33–35, 38, 40–44, 46–48	102[1]	Zhang[2]
1, 3–7, 9, 11, 13, 15–19, 21, 23, 25, 27–31, 33–35, 38, 40–44, 46–48	103(a)	Zhang
9–12, 21–25, 27–31, 33–38, 40–44, 46–51, 53–57, 59–64, 66–70, 72–76	103(a)	Zhang, Reisman[3]
2–6, 14–18, 26–30, 39–43	103(a)	Zhang, Jackson[4]
26–30, 39–43, 52–56, 65–69	103(a)	Zhang, Reisman, Jackson
1, 3–9, 11, 13, 15–21, 23, 32–34, 45–47	103(a)	Zhang, Pandey[5]
9–12, 21–24, 32–34, 45–47, 58–60, 71–73	103(a)	Zhang, Reisman, Pandey
2–6, 14–18	103(a)	Zhang, Pandey, Jackson

In support of its challenges, Petitioner relies on a Declaration of David B. Lett (Ex. 1002) and a Reply Declaration of David B. Lett (Ex. 1078). Patent Owner relies on a Declaration of Samuel H. Russ, Ph.D. (Ex. 2009).

[1] The Leahy-Smith America Invents Act ("AIA"), Pub. L. No. 112-29, 125 Stat. 284 (2011), amended 35 U.S.C. §§ 102 and 103, effective March 16, 2013. Because the application from which the '206 patent issued claims priority to an application filed before this date, the pre-AIA versions of §§ 102 and 103 apply.
[2] Zhang et al., U.S. Publ'n No. 2003/0056221 A1, published Mar. 20, 2003 (Ex. 1013).
[3] Reisman, U.S. Publ'n No. 2003/0229900 A1, published Dec. 11, 2003 (Ex. 1052).
[4] Jackson et al., U.S. Publ'n No. 2009/0113504 A1, published Apr. 30, 2009 (Ex. 1057).
[5] Pandey et al., U.S. Patent No. 7,237,214 B1, issued June 26, 2007 (Ex. 1014).

Transcripts of the depositions of Mr. Lett (Ex. 2018, Ex. 2019, Ex. 2021) and Dr. Russ (Ex. 1079) also are in the record.

III. DISCUSSION

A. Claim Construction

In an *inter partes* review proceeding, we construe a claim of a patent "using the same claim construction standard that would be used to construe the claim in a civil action under 35 U.S.C. 282(b)." *See* 37 C.F.R. § 42.100(b). That standard involves construing claims in accordance with the ordinary and customary meaning of such claims as would have been understood by a person of ordinary skill in the art ("POSITA") and the prosecution history pertaining to the patent. *See id.*; *Phillips v. AWH Corp.*, 415 F.3d 1303, 1312–14 (Fed. Cir. 2005) (en banc).

Petitioner asserts that "[a]ll claim terms herein should be given their ordinary and customary meaning to a POSITA." Pet. 18. Patent Owner does not respond. *See* PO Resp. For purposes of this Decision, we determine that no claim term requires express interpretation to resolve any controversy in this proceeding. *See Vivid Techs., Inc. v. Am. Sci. & Eng'g, Inc.*, 200 F.3d 795, 803 (Fed. Cir. 1999).

B. Asserted Challenges Based on Zhang Alone

Petitioner asserts that claims 1, 3–7, 9, 11, 13, 15–19, 21, 23, 25, 27–31, 33–35, 38, 40–44, and 46–48 of the '206 patent are anticipated by Zhang. Pet. 19–45. Petitioner also asserts that these claims would have been obvious over Zhang. *Id.* Patent Owner disputes certain aspects of Petitioner's analysis. PO Resp. 3–50. For the reasons explained below, we

determine that Petitioner has demonstrated by a preponderance of the evidence that claims 1, 3–7, 9, 11, 13, 15–19, 21, 23, 25, 27–31, 33–35, 38, 40–44, and 46–48 are anticipated by Zhang or would have been obvious over Zhang.

Before addressing the parties' arguments, we provide an overview of Zhang.

1. Overview of Zhang

Zhang describes demodulator circuits in broadband communications. Ex. 1013 ¶ 4. To illustrate one embodiment, Figure 2 of Zhang is reproduced below.

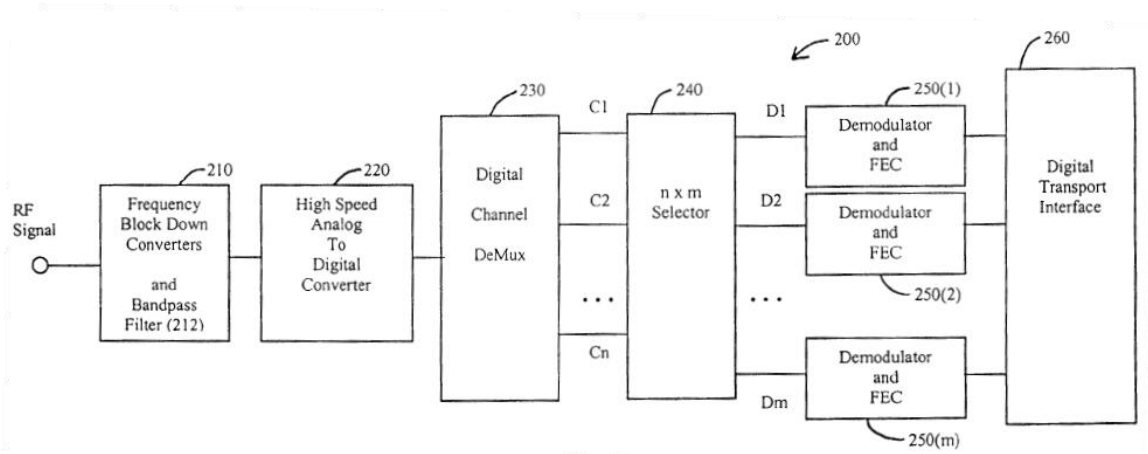

Fig. 2

Figure 2 is a diagram of multi-channel demodulator 200. *Id.* ¶ 23. Frequency-block down-converter 210 receives a multi-channel analog RF signal that can come from any of various sources such as satellite systems, terrestrial TV systems, and cable systems. *Id.* Down-converter 210 downshifts the multi-channel analog RF signal to a lower frequency band. *Id.* ¶ 25. Analog-to-digital converter 220 then converts the down-converted multi-channel analog RF signal to a multi-channel digital RF signal. *Id.*

¶ 27. Digital channel demultiplexer 230 demultiplexes the digital RF signal into separate digital RF channels C_1 to C_n. *Id.* ¶ 28. Digital selector 240 receives the demultiplexed digital RF channels and selects one or more of RF channels D_1 to D_m from one or more of digital RF channels C_1 to C_n. *Id.* The m selected RF channels are fed into respective demodulators 250(1) to 250(m), where they are demodulated. *Id.* ¶ 29. The selected RF channels D_1 to D_m then feed into digital transport interface 260. *Id.*

We turn now to the claims, starting with independent claims 1, 13, 25, and 38.

2. Independent Claim 1

Claim 1 is directed to a "method for receiving a television (TV) signal" and recites various steps including a "receiving" step, a "digitizing" step, a "concurrently selecting" step, and a "providing" step. Petitioner designates the preamble as element 1A and the recited steps as elements 1B through 1E. We address these elements, starting with Petitioner's arguments and then turning to the parties' dispute.

a. Element 1A: "method for receiving a television (TV) signal"

Claim 1 recites as its preamble "[a] method for receiving a television (TV) signal." Petitioner asserts that "Zhang describes an RF receiver, for example in a set-top box, that receives digital video channels over a cable system and that incorporates a DOCSIS return channel, which the '206 patent concedes is a protocol for 'cable networks that carry TV programs.'" Pet. 19–20 (citing Ex. 1013 ¶¶ 5–6, 23–25, 29, 41, 45–47; Ex. 1001, 9:4–8).

Patent Owner does not specifically dispute Petitioner's contentions regarding the preamble. *See* PO Resp. Although we do not determine whether the preamble is limiting, we are persuaded by Petitioner's argument and evidence that Zhang teaches the subject matter of the preamble.

b. Element 1B: "receiving" step

Claim 1 recites "receiving an input signal from a cable network." For this step, Petitioner provides an annotated version of Figure 2 of Zhang, which is reproduced below. Pet. 20.

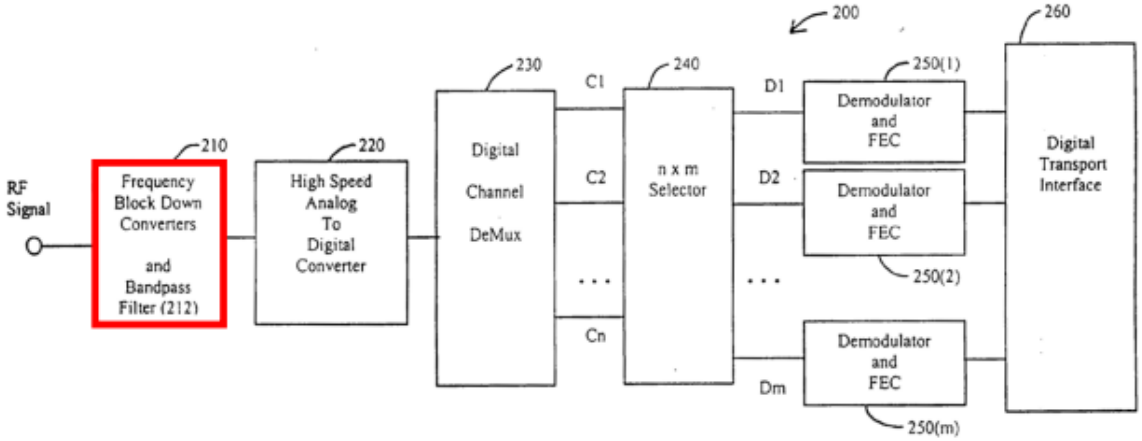

Fig. 2

Figure 2 of Zhang, as annotated by Petitioner, is a diagram of multi-channel demodulator 200. *See* Ex. 1013 ¶ 23. Petitioner asserts that "Zhang discloses receiving a 'multi-channel analog RF signal' (the claimed 'input signal') from a cable system with a frequency block down converter 210 (**red**)." Pet. 20 (citing Ex. 1013 ¶¶ 5–6, 23–24, 41, 45–47). According to Petitioner, "[t]he multi-channel analog RF signal is 'an RF signal in a given frequency band that carries multiple RF channels.'" *Id.* (quoting Ex. 1013 ¶ 24).

Patent Owner does not specifically dispute Petitioner's contentions regarding claim element 1B. *See* PO Resp. Based on Petitioner's argument and evidence, we find that Zhang teaches the recited receiving step of claim element 1B. *See* Pet. 20. For example, Zhang teaches its "frequency-block down-converter 210 receives one or more multi-channel analog RF signals which can be sourced by a variety of systems such as satellite systems, terrestrial TV systems, cable systems, etc." Ex. 1013 ¶ 23 (cited by Pet. 20).

c. Element 1C: "digitizing" step

Claim 1 further recites "digitizing a contiguous band of frequencies in the input signal via a wideband analog-to-digital converter (ADC), wherein the contiguous band of frequencies comprises all received channels that exist in the input signal and the received channels comprise a plurality of desired channels and a plurality of undesired channels." For this step, Petitioner provides another annotated version of Figure 2 of Zhang, reproduced below. Pet. 22.

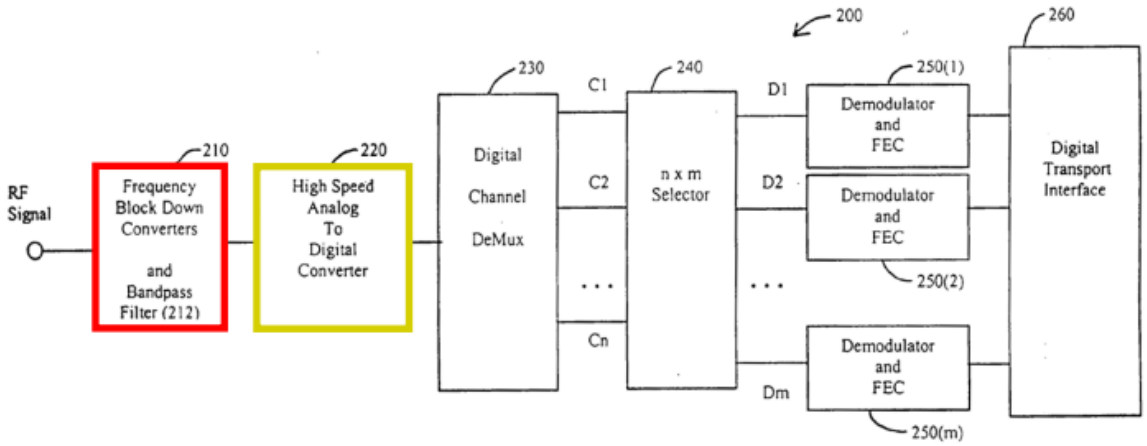

Fig. 2

Figure 2 of Zhang, as annotated by Petitioner, is a diagram of multi-channel demodulator 200. *See* Ex. 1013 ¶ 23. Petitioner asserts that "Zhang's

Frequency Block Down Converter 210 'shifts the multi-channel analog RF signal to a lower frequency band,' which is then digitized by Zhang's ADC 220 (**gold**)." Pet. 21 (citing Ex. 1013 ¶¶ 10, 23–25, 27, 31, 34, 42, 44).

Petitioner contends that "Zhang's ADC is 'wideband' because the digitized multi-channel RF signal includes several channels, and the channels form 'a contiguous band of frequencies' because . . . they are spaced next to each other within a frequency band with a 'precise frequency spacing' (e.g., 6MHz) that is a fraction of the total bandwidth of the multi-channel RF signal (e.g., 540-750 MHz divided into 35 channels)." Pet. 21 (citing Ex. 1013 ¶¶ 6, 10, 24–25, 27, 41–42, 47). Petitioner adds, "Zhang expressly discloses that in alternate variations of its system, 'RF channels need not be contiguous,' teaching that in the embodiment otherwise described, the RF channels are 'a contiguous band of frequencies.'" *Id.* at 22 (quoting Ex. 1013 ¶ 48).

Petitioner further contends that Zhang's "ADC 220 . . . 'converts an entire signal band . . . including the multi-channel analog RF signal,'" which, according to Petitioner, means "the digitized frequency band 'comprises all received channels that exist in the input signal.'" Pet. 23 (quoting Ex. 1013, claim 8).

Lastly, Petitioner contends that Zhang's "digitized multi-channel RF signal includes 'target' RF channels that are selected and demodulated in subsequent stages (claimed 'desired channels'), and undesired RF channels are filtered out (claimed 'undesired channels')." Pet. 23 (citing Ex. 1013 ¶¶ 5, 10–12, 27–29, 31–32, 35–36, 41–42, claim 37).

Patent Owner does not specifically dispute Petitioner's contentions regarding claim element 1C. *See* PO Resp. Based on Petitioner's arguments

and evidence, we find that Zhang teaches the recited digitizing step of claim element 1C.

d. Element 1D: "concurrently selecting" step

Claim 1 further recites "concurrently selecting each of the plurality of desired channels from the input signal without selecting any of the plurality of undesired channels." For this step, Petitioner provides yet another annotated version of Figure 2 of Zhang, reproduced below. Pet. 24.

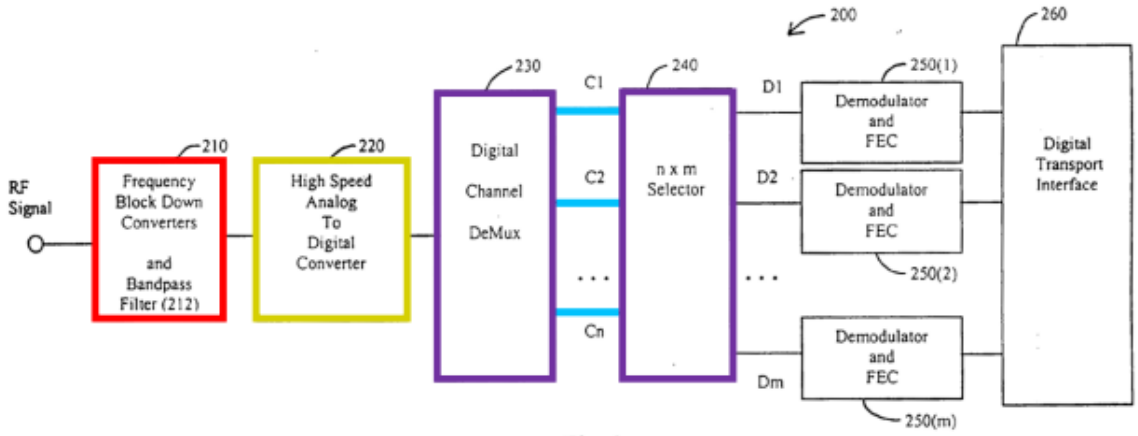

Fig. 2

Figure 2 of Zhang, as annotated by Petitioner, is a diagram of multi-channel demodulator 200. *See* Ex. 1013 ¶ 23. Petitioner asserts that Zhang's "multi-channel digital RF signal is input to Demultiplexer 230 and a portion of Digital Selector 240 (collectively **purple**) . . . , which perform Element [1D]." Pet. 23.

To illustrate, Petitioner also provides an annotated version of Figure 3 of Zhang, which is reproduced below. Pet. 25.

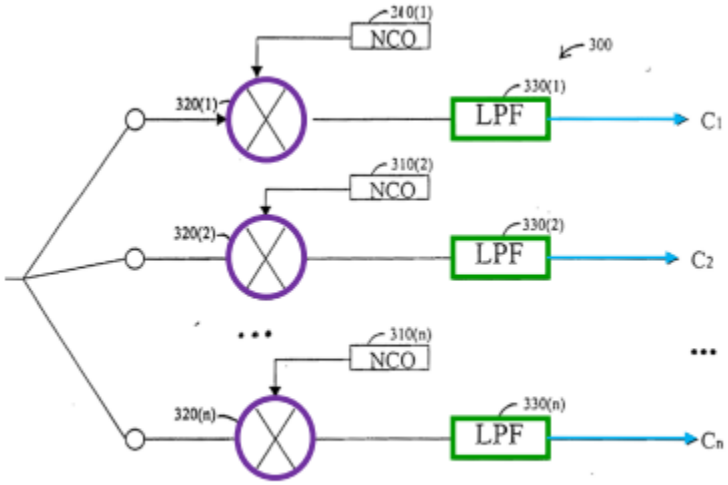

Fig. 3

Figure 3 of Zhang, as annotated by Petitioner, is a diagram of digital tuner 300, which may be used to implement demultiplexer 230 of Figure 2 of Zhang. *See* Ex. 1013 ¶ 30. Petitioner asserts that Zhang's "[d]igital tuner 300 . . . includes a plurality of signal paths for concurrently selecting a plurality of desired channels C_1 – C_n (**light blue**)," where "each path includes a complex multiplier 320 (**purple**) followed by a [low pass filter] 330 (**green**)." Pet. 24 (citing Ex. 1013 ¶¶ 30–34). Petitioner further asserts that each "complex multiplier 320 first downconverts (shifts) the multi-channel RF signal frequency so that a different 'target channel' selected by the subscriber within the signal is centered at baseband (0 Hz), and then low pass filter 330 filters out all undesired channels, so that one of the 'n' target digital channels C_1–C_n (**light blue**) is output." *Id.* at 25 (citing Ex. 1013 ¶¶ 28, 31–37). In addition, Petitioner asserts that "[s]elector 240 provides 'm' channels D_1–D_m selected from any or all of the channels C_1–C_n (**light blue**) for demodulation by one or more demodulators." *Id.* at 25–26 (citing Ex. 1013 ¶¶ 5, 28, 38–39, 47). According to Petitioner, Zhang's "Demultiplexer 230 and Selector 240 output only user selected channels

(either all or a subset of the user selected 'C' channels) and filter out all other channels from the digitized multi-channel RF signal." *Id.* at 26 (citing Ex. 1013 ¶¶ 28, 39, 47).

Patent Owner makes several arguments regarding claim element 1D, which we will address below.

e. Element 1E: "providing" step

Lastly, claim 1 recites "providing the plurality of desired channels via a serial interface." For this step, Petitioner provides an annotated version of Figure 5 of Zhang, reproduced below. Pet. 27.

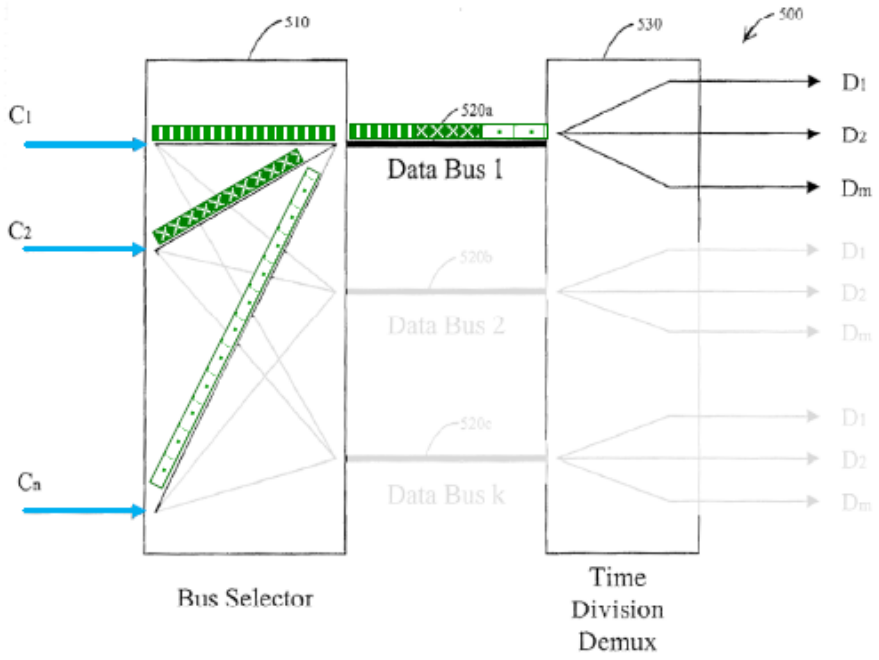

Ex. 1013, Fig. 5 (annotated)

Figure 5 of Zhang, as annotated by Petitioner, is a diagram of digital selector 500, which may be used to implement digital selector 240 of Figure 2 of Zhang. *See* Ex. 1013 ¶ 38. Petitioner asserts "[s]elector 240 may have only a single bus (e.g., Data bus 1) that receives channels $C_1 - C_n$ from the Channel Demultiplexer 230 (represented by green blocks with

different patterns) and sends them across the bus 'with the use of time division multiplexing.'" Pet. 26 (citing Ex. 1013 ¶¶ 38–39). According to Petitioner, "[a] POSITA would have understood that this sends different channels sequentially (serially) in different time divisions over a single data path as shown, and that such a path is a 'serial interface.'" *Id.* at 27. Petitioner relies on the declaration testimony of Mr. Lett as support. *Id.* at 26–28 (citing Ex. 1002 ¶¶ 115–119).

Under an alternative theory, Petitioner contends that, "[t]o the extent Zhang does not disclose a serial interface, implementing Zhang's circuitry to output the selected channels via a serial interface would have been obvious in light of the POSITA's general knowledge, creativity, and common sense as one of two common design choices that were well known and used by POSITAs in integrated circuit designs at the time." Pet. 28. Petitioner relies on the declaration testimony of Mr. Lett as support. *Id.* at 28–29 (citing Ex. 1002 ¶¶ 117, 120–121).

Patent Owner does not specifically dispute Petitioner's contentions regarding claim element 1E. *See* PO Resp. Based on Petitioner's arguments and evidence, we find that Zhang teaches the recited providing step of claim element 1E.

f. The Parties' Dispute

As discussed above, Patent Owner disputes Petitioner's analysis for claim element 1D. Patent Owner argues in particular "the '206 patent ***only*** selects desired channels from the digitized input RF signal without selecting any undesired channels," whereas "Zhang performs no selection from the digitized input signal." PO Resp. 3; *see also id.* at 3–7. According to Patent

Owner, Zhang "blindly extracts ***all*** channels, ***both*** desired ***and*** undesired, from the digitized input RF signal without performing any selection" and "only later selects the desired channels from the extracted channels." *Id.* at 3. Patent Owner cites Dr. Russ's declaration testimony that "Zhang digitizes an input signal . . . , consisting of 'n' desired and undesired channels, in the analog to digital converter 220," then "extracts from the digitized RF input signal ***all*** channels C_1–C_n, ***both*** desired ***and*** undesired, in the Digital Channel DeMux 230 . . . without making any selection," and then uses the selector 240 to "select[] the desired channels and output[] them to demodulators." *Id.* at 5–6 (quoting Ex. 2009 ¶¶ 33–35).

Petitioner counters that channels C_1–C_n and channels D_1–D_m independently teach the recited desired channels. Pet. Reply 4; *see also* PO Resp. 8–9 ("The Petition first appears to argue that Zhang's channels C_1–C_n constitute the claimed 'plurality of desired channels.' . . . Subsequently, however, Petitioner appears to suggest that Zhang's channels D_1–D_m may be the claimed 'desired channels.'"). Regarding channels C_1–C_n, Petitioner contends "Zhang does not mandate that C_1–C_n include all channels." Pet. Reply 6. Petitioner asserts "Zhang calls each of C_1–C_n a 'desired channel,' and the selected number 'n' of them is a variable disclosed as being less than the number of channels in the digitized input signal." *Id.* at 6 (citing Ex. 1013 ¶¶ 28, 30, 32–33, 42). As to channels D_1–D_m, Petitioner reiterates the "Petition's arguments, which identify a combination of demultiplexer 230 with all or part of the selector 240 for performing the 'selecting . . . from the input signal,'" where the "combined circuitry outputs D_1 to D_m, which are undisputedly desired channels . . . , and the

input of this circuitry is undisputedly the input signal comprising the plurality of desired channels from the ADCs." *Id.* at 6–7.

We agree with Petitioner. Starting with its argument that Zhang's channels C_1 to C_n teach the recited desired channels, we consider Zhang's teaching that its "channels C_1 to C_n contain content channels that are selected or used by a subscriber." Ex. 1013 ¶ 28 (cited by Pet. 25). The fact that channels C_1–C_n contain content channels that are "selected" or "used" implies that channels C_1–C_n themselves are desired channels, not both desired and undesired channels. Indeed, as Petitioner points out, Zhang refers to each of channels C_1–C_n as a "desired" channel:

> Numeric oscillator 310(1) generates a frequency, or "target" frequency, that matches the characteristic frequency of *a desired RF channel, or "target" RF channel*. . . . Thus, *only the target RF channel passes*. Digital tuner circuit 300 then outputs the *separated RF channels C_1 to C_n* . . . .

Id. ¶ 32 (emphases added) (cited by Pet. Reply 5).

We note Patent Owner's contention that Zhang's reference to "an entire signal band with n channels" means channels C_1–C_n include both desired and undesired channels. PO Resp. 11 (citing Ex. 1013 ¶ 27); *id.* at 17 ("[I]n Zhang, the number of complex multipliers 320 (1 . . . n) is the same number 'n' as the number of all channels, both desired and undesired, in the entire signal band."); *id.* at 18 ("Zhang is clear that the number 'n' in its disclosure denotes both desired and undesired in 'entire signal band.'"); *see also id.* at 16–24 (asserting "Petitioner's arguments are inconsistent with Zhang" (capitalization and emphasis omitted)). As noted above, however, Zhang explains that "channels C_1 to C_n contain content channels that are selected or used by a subscriber." Ex. 1013 ¶ 28; *see also id.* ¶ 42 ("A

demultiplexer . . . demultiplexes the multi-channel digital RF signal into separate digital RF channels C_1 to C_n. . . . *The exact number will depend on the specific application*." (emphasis added)); *id.* ¶ 30 ("Digital tuner 300 includes a bank of n numeric control oscillators . . . , complex multipliers . . . , and low-pass filters . . . . One chain of each of these elements is used for each RF channel. *The exact number of these elements will depend on the number of RF channels to be demultiplexed*." (emphasis added)). Zhang then characterizes each of channels C_1–C_n as a "desired RF channel." *Id.* ¶ 32 ("Numeric oscillator 310(1) generates a frequency . . . that matches the characteristic frequency of a desired RF channel."); *id.* ("LPFs 330(1 . . . n) receive all RF channels and each filters out all RF channels except for its target RF channel. Thus, only the target RF channel passes."). In the context of Zhang's full disclosure, the reference to "an entire signal band with n channels" appears to be a reference to a signal band that *includes* the selected (or used) n channels. That is, the signal band could also include unselected (or unused) channels. This reading is further supported by claim 8 of Zhang, which recites "the ADC converts an entire signal band, the signal band including the multichannel analog RF signal." *Id.*, claim 8 (cited by Pet. 23).

We also note Patent Owner's contention that Zhang's prosecution history reveals "the applicant explained that it is the selector that distinguished Zhang from its prior art, where all of the channels were demodulated." PO Resp. 14–15; *see also id.* at 17 ("[I]f Zhang's Figure 3 down converted and output only desired channels, there would have been no need for the subsequent channel selector 240 to select desired channels D_1–D_m from channels C_1–C_n." (quoting Ex. 2009 ¶ 57)). Distinguishing Zhang

from the prior art based on Zhang's selector, however, does not mean Zhang's channels C_1–C_n include both desired and undesired channels. Zhang explains that "channels C_1 to C_n contain content channels that are selected or used by a subscriber," and that "selector 240 . . . selects one or more of the RF channels D_1 to D_m from one or more of the digital RF channels C_1 to C_n." Ex. 1013 ¶ 28. In other words, channels C_1–C_n may be a set of subscriber-selected channels while channels D_1–D_m may be a further set of subscriber-selected channels that are a subset of channels C_1–C_n. Being able to select a subset of channels translates to systems that are faster and dissipate less heat because fewer resources are needed to demodulate only the selected subset of channels. *See id.*

Even if Zhang's channels C_1–C_n were to include both desired and undesired channels, however, Patent Owner's argument still fails. Turning to Petitioner's contention that Zhang's channels D_1 to D_m teach the recited desired channels, we note Petitioner identifies Zhang's demultiplexer 230 and digital selector 240 *together* as the circuitry that performs the recited concurrently selecting step of claim element 1D. Pet. 23–24. As Petitioner points out, Zhang teaches "demultiplexer 230 . . . demultiplexes the multi-channel digital RF signal into separate digital RF channels C_1 to C_n." Ex. 1013 ¶ 28, Fig. 2 (cited by Pet. 23–24). Zhang further teaches "selector 240 receives the demultiplexed digital RF channels C_1 to C_n and then *selects one or more of the RF channels D_1 to D_m* from one or more of the digital RF channels C_1 to C_n." *Id.* ¶ 28 (emphasis added), Fig. 2. In other words, Zhang's selector 240 (which Petitioner identifies as part of the circuitry that performs the recited concurrently selecting step) selects channels D_1–D_m (which Petitioner identifies as the recited desired channels)

from channels C_1–C_n. *See* Pet. 26 ("Demultiplexer 230 and Selector 240 output only user selected channels (either all or a subset of the user selected 'C' channels)."); Pet. Reply 6 ("This combined circuitry outputs D_1–D_m, which are undisputedly desired channels."); Ex. 1013 ¶ 28. Patent Owner does not dispute this aspect of Petitioner's analysis, acknowledging Zhang's "[s]elector 240 selects desired channels D_1–D_m from channels C_1–C_n." PO Resp. 13 (annotated Figure 2 of Zhang).

Patent Owner further argues "Petitioner's assertion that Zhang's channels C_1–C_n disclose the claimed 'desired channels' . . . is also inconsistent with Petitioner's mapping of Zhang to other claim limitations," namely the providing step of claim element 1E. PO Resp. 24–25. To illustrate its position, Patent Owner provides an annotated version of Figure 5 of Zhang, reproduced below. *Id.* at 25.

Figure 5 "selects one or more RF channels D_1 to D_m from the digital RF channels C_1 to C_n and then sends them to appropriate demodulators or outputs ports ... through different data buses ...." Ex. 1013 [Zhang] [0039]

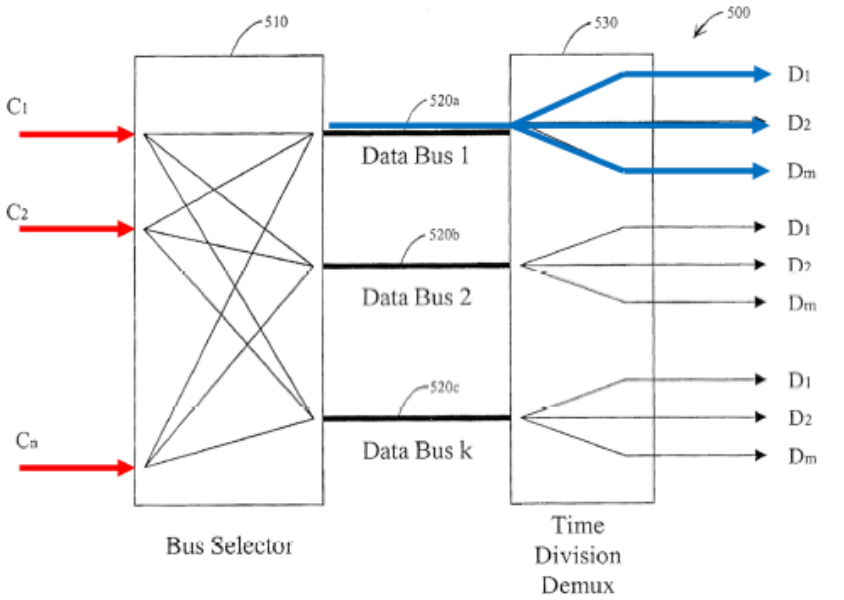

Fig. 5

Figure 5 of Zhang, as annotated by Patent Owner, is a diagram of selector 500, which may be used to implement selector 240 of Figure 2 of Zhang. *See* Ex. 1013 ¶ 38. Patent Owner asserts "what is 'provided' on Zhang's Data Bus 1 in the selector 240 are channels D_1–D_m (blue) shown on the right-hand side output of data bus 1, not channels C_1–C_n (red)." PO Resp. 26. According to Patent Owner, to the extent Petitioner relies on channels C_1–C_n as the desired channels for claim element 1D, "that mapping contradicts Petitioner's mapping for limitation [1E], which relies on channels D_1–D_m as 'the plurality of desired channels' provided on a 'serial interface.'" *Id.* at 26.

We disagree with Patent Owner. Claim element 1E recites "providing the plurality of desired channels via a serial interface." As discussed above, Petitioner contends that Zhang's channels C_1–C_n and channels D_1–D_m independently (as well as collectively) teach the recited desired channels. Pet. 24, 26; Pet. Reply 4. Zhang teaches that its "demultiplexer 230 . . . demultiplexes the multi-channel digital RF signal into separate digital RF channels C_1 to C_n," and that its "selector 240 receives the demultiplexed digital RF channels C_1 to C_n and then selects one or more of the RF channels D_1 to D_m from one or more of the digital RF channels C_1 to C_n." Ex. 1013 ¶ 28, Figs. 2, 3, 5.

As to Petitioner's theory that channels C_1–C_n teach the recited desired channels, we consider Figures 2, 3, and 5 of Zhang, which show selector 240 receives channels C_1–C_n (e.g., desired channels) that are then provided via a serial interface in selector 240 (e.g., selector 500) as further channels D_1–D_m. Ex. 1013, Figs. 2, 3, 5. Patent Owner does not appear to dispute that Zhang operates in this way. *See* PO Resp. 25 (annotation acknowledging Zhang's

"Figure 5 'selects one or more RF channels D_1 to D_m from the digital RF channels C_1 to C_n and then sends them to appropriate demodulators or output ports . . . through different data buses.'" (quoting Ex. 1013 ¶ 39)). Accordingly, Petitioner's reliance on channels C_1–C_n as the recited desired channels is persuasive.

As to Petitioner's theory that channels D_1–D_m teach the recited desired channels, we again consider Figures 2, 3, and 5 of Zhang, which show selector 240 selects channels D_1 to D_m (e.g., desired channels) from channels C_1 to C_n and provides selected channels D_1 to D_m via a serial interface in selector 240 (e.g., selector 500). Ex. 1013, Figs. 2, 3, 5. As noted above, Patent Owner acknowledges Zhang's "[s]elector 240 selects desired channels D_1–D_m from channels C_1–C_n." PO Resp. 13 (annotated Figure 2 of Zhang). Accordingly, Petitioner's reliance on channels D_1–D_m as the recited desired channels also is persuasive.

Patent Owner further argues that, "[t]o the extent Petitioner relies on channels D_1–D_m as the claimed 'plurality of desired channels,' that reliance also fails to disclose or render obvious the claims because channels D_1–D_m are not selected 'from the input signal.'" PO Resp. 27; *see also id.* at 27–36.

Petitioner counters that "the digital circuitry [for performing step 1D] is demultiplexer 230, in combination with all or part of selector 240," which means "the input to the relied-upon digital circuitry (i.e., the input to demultiplexer 230) is the input signal including the desired channels from the ADCs, *not* the individual channels C_1–C_n" and "[t]he output of the relied-upon circuit is D_1–D_m, which are the desired channels." Pet. Reply 8–9. According to Petitioner, the relied-upon circuit is selecting desired channels D_1–D_m "from the input signal." *Id.* at 9. To illustrate, Petitioner

provides a figure based on Figures 2, 3, and 5 of Zhang, reproduced below. *Id.*

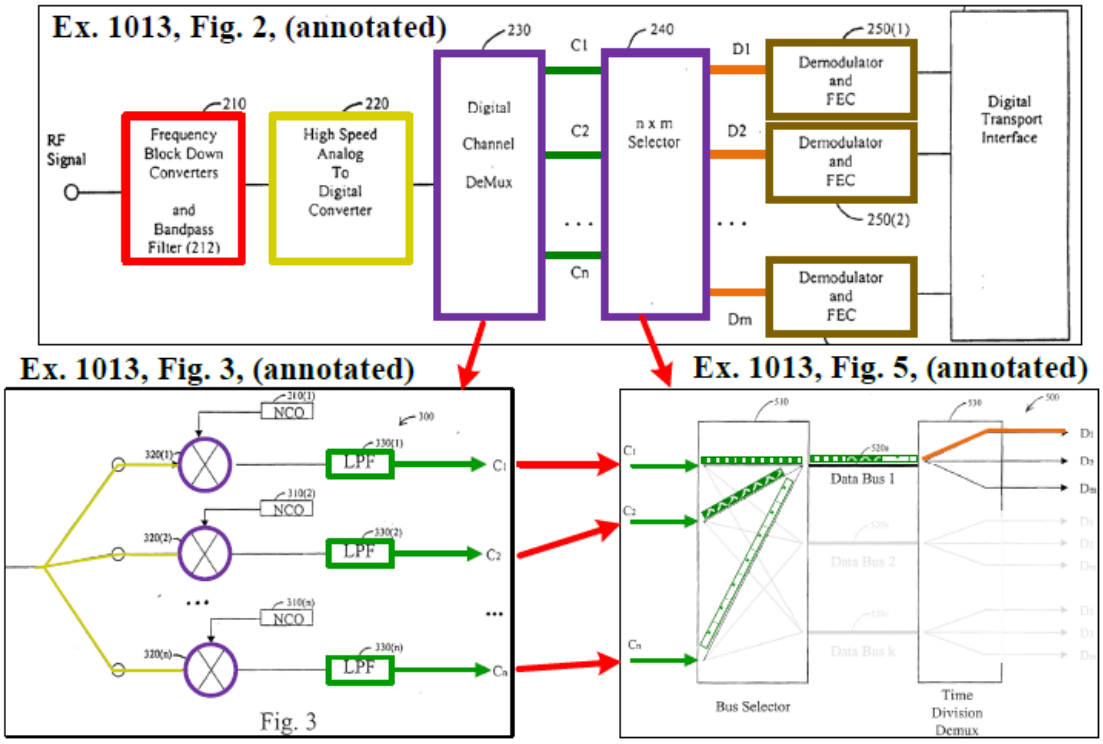

Petitioner's figure combines annotated versions of Figures 2, 3, and 5 of Zhang. *Id.* As discussed above, Figure 2 of Zhang shows multi-channel demodulator 200 with demultiplexer 230 and selector 240; Figure 3 of Zhang shows digital tuner 300 that can be used to implement demultiplexer 230; and Figure 5 of Zhang shows selector 500 that can be used to implement digital selector 240. Ex. 1013 ¶¶ 23, 30, 38. Petitioner asserts that its composite figure shows "the input to the relied-upon circuit (coming from the bottom left side of the figure) is not the individual channels C_1–C_n output by demultiplexer 230, but rather the recited input signal." Pet. Reply 9.

We agree with Petitioner. Claim element 1D recites "concurrently selecting each of the plurality of desired channels from the input signal

without selecting any of the plurality of undesired channels." Petitioner contends Zhang's demultiplexer 230 and selector 240 *together* perform the step of claim element 1D. Petitioner identifies the signal provided by Zhang's ADC 220 as the recited input signal and Zhang's channels D_1–D_m as the recited desired channels. Pet. 20–21, 23, 25–26. As Petitioner's composite figure shows, channels D_1–D_m are selected from the signal provided by ADC 220. Pet. Reply 9; *see also* Ex. 1013, Figs. 2, 3, 5.

Patent Owner contends that Zhang's channels D_1–D_m are selected from channels C_1–C_n and *not* the signal provided by ADC 220. PO Resp. 28. But channels D_1–D_m are based on channels C_1–C_n, which are based on the signal provided by ADC 220. It, therefore, necessarily follows that channels D_1–D_m also are based on the signal provided by ADC 220. In other words, the channels D_1–D_m, which are picked from channels C_1–C_n, are the same channels in both groups, and Patent Owner does not dispute channels C_1–C_n are based on the signal provided by ADC 220. *See* Ex. 2023, 60:8–19 (Mr. Lett's deposition testimony from a related case ("[L]et's make C equals to D. . . . C1 is the exact same thing as D1. C2 is the exact same as D2. And so on and so forth. All of those are selected from the input frequencies.")). Petitioner correctly contends, "[n]othing in the claim language prevents the recited 'selecting' . . . from being performed by a digital multiplexer 230 that selects and down converts individual channels from the incoming signal from the ADC in combination with a digital selector 240 that passes certain of those signals along to a demodulator." Pet. Reply 9–10. This understanding is consistent with the stated objective of the '206 patent because channel selection at the demodulator is still avoided. *See* Ex. 1001, 2:38–41 ("It is desirable to have

wideband receiver systems that can increase the dynamic range without requiring . . . channel selection at the demodulator.”).

We note Patent Owner’s contention based on the doctrine of claim differentiation. Patent Owner asserts “claim 1 of [a related patent] recites a ‘digital front end’ that is configured to ‘concurrently select and provide each of the plurality of desired channels without providing any of the plurality of undesired channels,’ but does not expressly recite that the selection must be ‘from the input signal.’” PO Resp. 34. Patent Owner further asserts that, “[i]f claim 1 of the ‘206 patent were read so broadly as to cover the selection of Zhang’s channels D_1–D_m, then the language of the claim requiring that these channels be selected ‘from the input signal’ would be rendered superfluous.” *Id.* at 35.

It is not clear how the selection of desired channels “from the input signal” in the ’206 patent and the selection of desired channels as recited in the related patent are meaningfully different. *See* Pet. Reply 14 (“[T]he language ‘from the input signal’ is not rendered superfluous if read according to its ordinary meaning to include ‘directly and indirectly from’ as opposed to just ‘directly’ from.”). Indeed, the Federal Circuit has recognized that “two claims with different terminology can define the exact same subject matter.” *Curtiss-Wright Flow Control Corp. v. Velan, Inc.*, 438 F.3d 1374, 1380 (Fed. Cir. 2006); *see also Hormone Res. Foundation v. Genentech, Inc.*, 904 F.2d 1558, 1567 n.15 (Fed. Cir. 1990) (“It is not unusual that separate claims may define the invention using different terminology, especially where (as here) independent claims are involved.”). For this reason, we are “cautioned that ‘[c]laim differentiation is a guide, not

a rigid rule.'" *Curtiss-Wright*, 438 F.3d at 1381 (quoting *Laitrim Corp. v. Rexnord, Inc.*, 939 F.2d 1533, 1538 (Fed. Cir. 1991)).

Based on the record before us, we find that Zhang teaches the recited concurrently selecting step of claim element 1D. *See* Pet. 23–26.

In view of the foregoing, we find that Zhang teaches all the limitations of claim 1.

3. Independent Claim 13

Claim 13 is directed to a "method" and recites various limitations. Petitioner designates the preamble as element 13A and the recited limitations as elements 13B through 13E.

Claim elements 13A, 13B, 13C, and 13E are similar to claim elements 1A, 1B, 1C, and 1E. For these similarly recited elements, Petitioner relies primarily on its analysis for claim 1. Pet. 29–30, 33. Patent Owner does not dispute Petitioner's contentions regarding elements 13A, 13B, 13C, or 13E. *See* PO Resp. Based on Petitioner's argument and evidence, and for the reasons given above as to claim 1, we find that Zhang teaches the similarly recited elements of claim 13.

We turn now to claim element 13D, starting with Petitioner's arguments and then turning to the parties' dispute.

a. Element 13D: "digitally down converting" step

Claim 13 recites "digitally down converting each desired channel, of the plurality of desired channels, to generate a plurality of digital channel outputs." For this step, Petitioner provides an annotated version of Figure 2 of Zhang, reproduced below. Pet. 31.

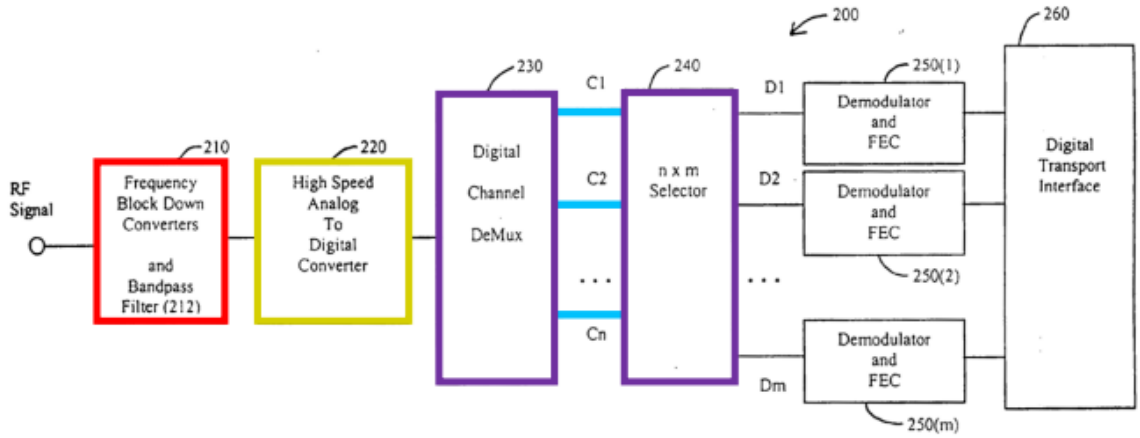

Fig. 2

Figure 2 of Zhang, as annotated by Petitioner, is a diagram of multi-channel demodulator 200. *See* Ex. 1013 ¶ 23. Petitioner asserts that "Zhang's Demultiplexer 230 and Digital Selector 240 (collectively **purple**) perform Element [13D]." Pet. 30.

To illustrate, Petitioner also provides an annotated version of Figure 3 of Zhang, which is reproduced below. Pet. 32.

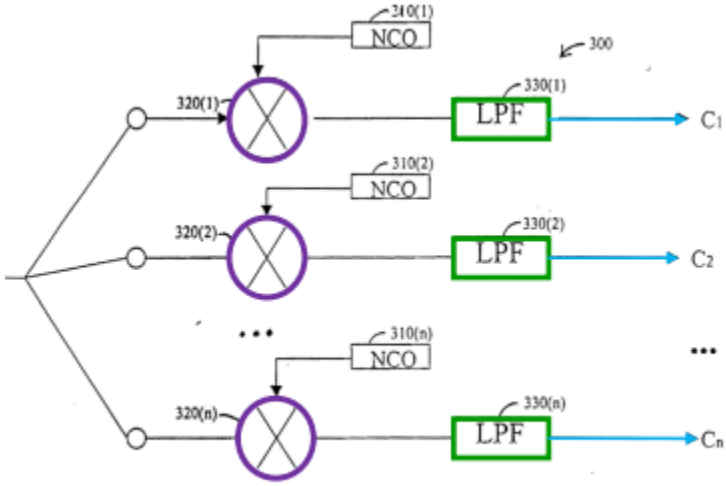

Fig. 3

Figure 3 of Zhang, as annotated by Petitioner, is a diagram of digital tuner 300, which may be used to implement demultiplexer 230 of Figure 2 of Zhang. *See* Ex. 1013 ¶ 30. Referring to Figure 3, Petitioner asserts

Zhang's "demultiplexer 230 . . . includ[es] a plurality of signal paths for downconverting (i.e., shifting to a lower frequency) a plurality of desired channels $C_1 – C_n$ (**light blue**)," where "each path includes a complex multiplier 320 (**purple**) followed by a low pass filter 330 (**green**)." Pet. 31 (citing Ex. 1013 ¶¶ 30–34, Fig. 3). Petitioner further asserts each "complex multiplier 320 first downconverts (shifts) the frequency of the multi-channel RF signal so that a different 'target channel' selected by the subscriber within the signal is centered at baseband (0 Hz), and then low pass filter 330 filters out all undesired channels, so that one of the 'n' target digital channels C_1–C_n (**light blue**) is output." *Id.* (citing Ex. 1013 ¶ 28). In addition, Petitioner asserts "[s]elector 240 provides 'm' channels D_1 - D_m which can be any or all of channels C_1 - C_n (**light blue**) for demodulation by one or more demodulators." *Id.* at 32 (citing Ex. 1013 ¶¶ 28, 30–31, 38–39, 42, 47). According to Petitioner, Zhang's "Demultiplexer 230 and Digital Selector 240 thus perform[] the . . . step of 'digitally down converting . . . to generate a plurality of digital channel outputs' where the 'outputs' are C_1 – C_n (**light blue**) (or D_1 – D_m)." *Id.* at 32 (citing Ex. 1013 ¶¶ 28, 30–31, 38–39, 42, 47). Petitioner relies on the declaration testimony of Mr. Lett. *Id.* at 30–32 (citing Ex. 1002 ¶¶ 129–134).

Patent Owner makes several arguments regarding claim element 13D, which we address below.

b. The Parties' Dispute

Patent Owner argues Petitioner's reliance on channels C_1–C_n as the recited plurality of digital channel "is based on the misapprehension that channels C_1–C_n are the claimed 'desired channels.'" PO Resp. 43. Patent

Owner reiterates its position that "channels C_1–C_n contain both desired and undesired channels." *Id.*; *see also id.* at 43–47.

Patent Owner's argument is unavailing. Claim element 13D recites "digitally down converting each desired channel . . . to generate a plurality of digital channel outputs." We consider Petitioner's annotated version of Figure 2 of Zhang, reproduced below. Pet. 31.

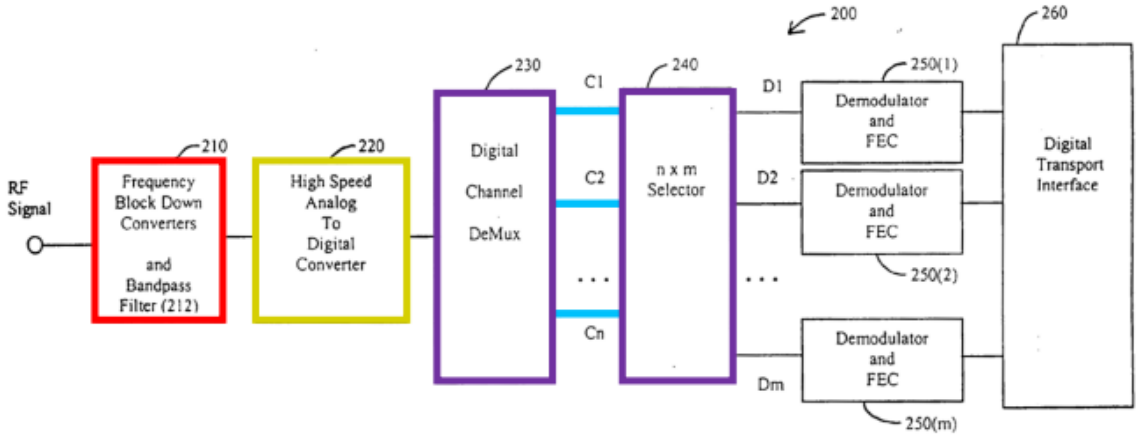

Fig. 2

Figure 2 of Zhang, as annotated by Petitioner, is a diagram of multi-channel demodulator 200. *See* Ex. 1013 ¶ 23. Petitioner identifies Zhang's demultiplexer 230 and selector 240 together as the circuitry that performs the recited digitally down converting step of claim element 13D. Pet. 30.

As discussed above with respect to claim 1, Zhang teaches that "RF channels C_1 to C_n contain content channels that are selected or used by a subscriber." Ex. 1013 ¶ 28. Petitioner points out Zhang even refers explicitly to each of selected or used channels C_1–C_n as a "*desired* RF channel." *Id.* ¶ 32 (emphasis added) ("[O]scillator 310(1) generates a frequency . . . that matches the characteristic frequency of a desired RF channel."). In this way, channels C_1–C_n satisfy the recited desired channels.

Turning back to Petitioner's annotated version of Zhang's Figure 2, reproduced above, we find that demultiplexer 230 (which Petitioner identifies as part of the circuitry that performs the digitally down converting step of element 13D) digitally down converts channels C_1–C_n (which Petitioner identifies as the recited desired channels) to generate digital channel outputs (outputs of demultiplexer 230 for channels C_1–C_n). *See* Pet. 31.

Patent Owner further argues Petitioner's reliance on channels C_1–C_n as the recited plurality of digital channel outputs "contradicts Petitioner's mapping for limitation [13E], where Petitioner relies on Zhang's channels D_1–D_m as the claimed 'plurality of digital channel outputs.'" PO Resp. 38. Patent Owner asserts "the 'plurality of digital channel outputs' that are provided 'via a serial interface' in limitation [13E] in Zhang are channels D_1–D_m, not channels C_1–C_n." *Id.* at 39; *see also id.* at 39–41. To illustrate its position, Patent Owner provides an annotated version of Figure 5 of Zhang, reproduced below. *Id.* at 41.

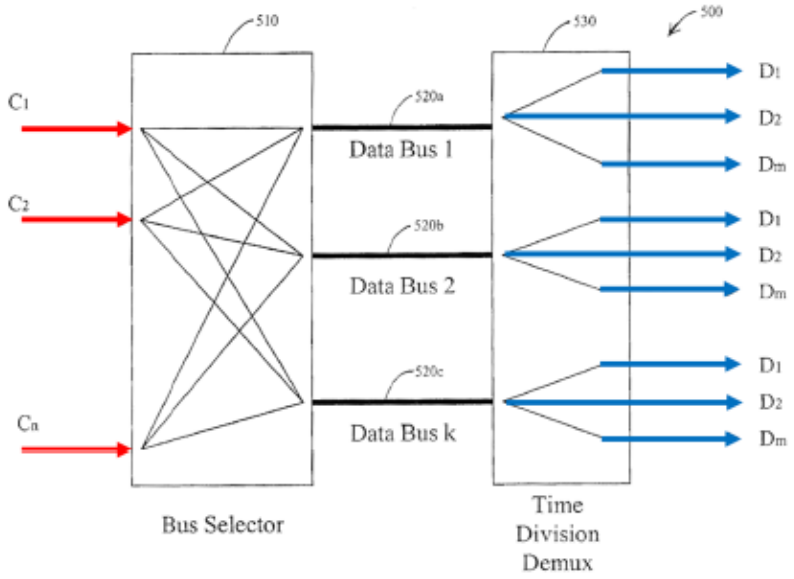

Fig. 5

Figure 5 of Zhang, as annotated by Patent Owner, is a diagram of selector 500, which may be used to implement selector 240 of Figure 2. *See* Ex. 1013 ¶ 38. Patent Owner asserts "what is 'provided' on data bus 1 in the selector 240 [are] channels D_1–D_m shown on the right-hand side output of data bus 1, not channels C_1–C_n." PO Resp. 40.

We disagree with Patent Owner. Claim element 13E recites "providing the plurality of digital channel outputs via a serial interface." Petitioner contends Zhang's demultiplexer 230 and selector 240 together perform this step. *See* Pet. 33 (asserting the recited digital channel outputs "are disclosed in Zhang as outputs C_1–C_n/D_1–D_m"). As shown in Figures 2, 3, and 5 of Zhang, demultiplexer 230 provides digital channel outputs (e.g., outputs for channels C_1–C_n) that are then provided via a serial interface in selector 240 (e.g., selector 500) as further channels (e.g., channels D_1–D_m). Ex. 1013, Figs. 2, 3, 5. Patent Owner does not appear to dispute that Zhang operates in this way. *See* PO Resp. 41 ("[A]s Zhang's own Figure 5 shows, the channels 'provided' on data buses (such as Data Bus 1) are channels D_1–D_m selected from channels C_1–C_n."). Accordingly, Petitioner's reliance on channels C_1–C_n as the recited digital channel outputs is persuasive.

Even if Petitioner were to rely on channels D_1–D_m as the recited digital channel outputs in claim element 13E, Patent Owner's argument that Petitioner's mapping is inconsistent still fails. Claim element 13D recites "digitally down converting each desired channel . . . to generate a plurality of digital channel outputs." Claim element 13E adds "providing the plurality of digital channel outputs via a serial interface."

As discussed above, Petitioner contends Zhang's demultiplexer 230 and selector 240 together perform these steps. Pet. 30, 33. As part of its

analysis for claim element 13D, Petitioner cites to where Zhang teaches "demultiplexer 230 . . . demultiplexes the multi-channel digital RF signal into separate digital RF channels C_1 to C_n," and "selector 240 receives the demultiplexed digital RF channels C_1 to C_n and then selects one or more of the RF channels D_1 to D_m from one or more of the digital RF channels C_1 to C_n." Ex. 1013 ¶ 28, Fig. 2 (cited by Pet. 31–32). In other words, channels D_1–D_m may be a subset of channels C_1–C_n. For claim element 13E, Petitioner cross-references its discussion of claim element 1E in which Petitioner asserts "[s]elector 240 . . . further provides the desired channels 'via a serial interface.'" Pet. 26, 33.

Thus, Zhang's demultiplexer 230 down converts channels C_1–C_n (which include channels D_1–D_m as a subset) so that Zhang's selector 240 can generate digital channel outputs (e.g., outputs for channels D_1–D_m) and provide them via a serial interface in selector 240 (e.g., selector 500). Ex. 1013 ¶ 28, Figs. 2, 3, 5. Patent Owner acknowledges "selector 500 digitally selects one or more RF channels D_1 to D_m from the digital RF channels C_1 to C_n and then sends them to appropriate demodulators or output ports." PO Resp. 49 (quoting Ex. 1013 ¶ 39). Accordingly, Petitioner's reliance on channels D_1–D_m as the recited digital channel outputs also is persuasive.

We note Patent Owner's contention that "it is the output C_1–C_n, not D_1–D_m, that is 'generated' by digital down conversion in Zhang." PO Resp. 48. According to Patent Owner, "the output D_1–D_m is generated by selecting desired channels from the already down converted channels C_1–C_n." *Id.*

Petitioner counters that it relies on Zhang's demultiplexer 230 and selector 240 *together* to perform the steps recited in claim elements 13D and 13E. Pet. Reply 8–9; Pet. 30, 33. Under that theory, Petitioner asserts "[t]he output of the relied-upon circuit is D_1–D_m, which are the . . . digital channel outputs," and "[i]t necessarily follows that this relied-upon circuit is . . . down converting the . . . desired channels/digital channel outputs (D_1–D_m)." Pet. Reply 9.

We agree with Petitioner. The relied-upon circuit (i.e., Zhang's demultiplexer 230 and selector 240) down converts desired channels (e.g., channels D_1–D_m, which are a subset of channels C_1–C_n) via Zhang's demultiplexer 230 to generate digital channel outputs (e.g., outputs for channels D_1–D_m) via Zhang's selector 240 and provide the digital channel outputs via a serial interface in selector 240 (e.g., selector 500). Ex. 1013 ¶ 28, Figs. 2, 3, 5.

We also note Patent Owner's further contention that, "[t]o the extent Petitioner's argument rests on the theoretical happenstance that sometimes all channels C_1–C_n may subsequently be selected, and by happenstance channels C_1–C_n and channels D_1–D_m would happen to be the same set (*i.e.*, n would happen to equal m), that argument fails" because "Petitioner does not point to any disclosure in Zhang that teaches or suggests that all extracted channels C_1–C_n could be the desired channels D_1–D_m." PO Resp. 41–42. Patent Owner adds that "the theoretical happenstance that all extracted channels C_1–C_n could be the desired channels D_1–D_m cannot disclose the claimed method." *Id.* at 42.

Patent Owner's contention is unavailing. As discussed above, Petitioner's analysis for claim element 13D holds water where channels D_1–

D_m are a subset of channels C_1–C_n. Moreover, contrary to Patent Owner's position, Zhang does contemplate selecting all channels C_1–C_n so that channels C_1–C_n and channels D_1–D_m are the same set. As Petitioner points out, Zhang teaches its "selector 240 . . . selects *one or more* of the RF channels D_1 to D_m from *one or more* of the digital RF channels C_1 to C_n." Ex. 1013 ¶ 28 (emphases added) (cited by Pet. 32). This teaching implies channels C_1–C_n and channels D_1–D_m may be the same set. In that case, Petitioner's reliance on either channels C_1–C_n or channels D_1–D_m as the recited digital channel outputs also is persuasive. *See* Ex. 2023, 60:8–19 (Mr. Lett's deposition testimony from a related case ("[L]et's make C equals to D. . . . C1 is the exact same thing as D1. C2 is the exact same as D2. And so on and so forth. All of those are selected from the input frequencies. In other words, Zhang's digital selector can be configured as -- to just pass through all the Cs.")).

Based on the record before us, we find that Zhang teaches the recited digitally down converting step of claim element 13D. *See* Pet. 30–32.

In view of the foregoing, we find that Zhang teaches all the limitations of claim 13.

4. Independent Claim 25

Claim 25 is directed to a "method for receiving a television (TV) signal" and recites similar limitations as claim 1. For example, claim 25 recites a "receiving" step, a "digitizing" step, a "concurrently selecting" step, and a "providing" step. For these similarly recited limitations, Petitioner relies primarily on its analysis for claim 1. Pet. 33. Patent Owner likewise relies on its arguments regarding claim 1. *See* PO Resp. 8. Based on

Petitioner's argument and evidence, and for the reasons given above as to claim 1, we find that Zhang teaches the similarly recited limitations of claim 25.

Claim 25 adds that "the method is performed by a device comprising a digital video reorder (DVR)." For this limitation, Petitioner asserts "Zhang discloses that its cable TV device may be integrated as a wide-band front-end of a 'set-top box/PVR/home media server.'" Pet. 33 (citing Ex. 1013 ¶ 45, Fig. 8). According to Petitioner, "[a] POSITA would have understood that 'PVR' stands for 'personal video recorder,' which is an alternate name for 'DVR' or 'digital video recorder' for recording audio and video content received by a STB." *Id.* at 33–34. Petitioner relies on the declaration testimony of Mr. Lett as support. *Id.* (citing Ex. 1002 ¶¶ 137–140).

Patent Owner does not specifically dispute Petitioner's contentions regarding this additional limitation of claim 25. *See* PO Resp. Based on Petitioner's argument and evidence, we find that Zhang teaches the recited DVR of claim element 25F. *See* Pet. 33–34.

In view of the foregoing, we find that Zhang teaches all the limitations of claim 25.

5. Independent Claim 38

Claim 38 is directed to a "method" and recites similar limitations as claims 1, 13 and 25. For example, claim 38 recites a "receiving" step, a "digitizing" step, a "digitally down converting" step, and a "digital video recorder (DVR)." For these similarly recited limitations, Petitioner relies on its analysis for claims 1, 13, and 25. Pet. 34. Patent Owner relies on its arguments regarding claim 13. *See* PO Resp. 36. Based on Petitioner's

argument and evidence, and for the reasons given above as to claims 1, 13, and 25, we find that Zhang teaches all the limitations of claim 38.

6. Dependent Claims

Each of claims 3–7, 9, 11, 15–19, 21, 23, 27–31, 33–35, 40–44, and 46–48 depends from independent claims 1, 13, 25, or 38. Petitioner contends that Zhang teaches the limitations recited in these dependent claims. Pet. 35–45 (citing Ex. 1013 ¶¶ 5–7, 11–12, 23–24, 28–34, 38–39, 41–48, Figs. 2, 3, 5). Petitioner relies on the declaration testimony of Mr. Lett as support. *Id.* (citing Ex. 1002 ¶¶ 60–65, 71–73, 115–121, 135–136, 145–149, 150–172).

Patent Owner does not specifically dispute Petitioner's contentions regarding the dependent claims. *See* PO Resp. Having reviewed Petitioner's argument and evidence (*see* Pet. 35–45), we find that Zhang teaches the limitations of the dependent claims.

7. Summary

In view of the foregoing, we determine that Petitioner has demonstrated by a preponderance of the evidence that claims 1, 3–7, 9, 11, 13, 15–19, 21, 23, 25, 27–31, 33–35, 38, 40–44, and 46–48 are anticipated by Zhang or would have been obvious over Zhang.

C. Asserted Challenge Based on Zhang and Reisman

Petitioner asserts that claims 9–12, 21–25, 27–31, 33–38, 40–44, 46–51, 53–57, 59–64, 66–70, and 72–76 of the '206 patent would have been obvious over Zhang and Reisman. Pet. 45–56. Patent Owner disputes

certain aspects of Petitioner's analysis. PO Resp. 3–50. For the reasons explained below, we determine that Petitioner has demonstrated by a preponderance of the evidence that claims 9–12, 21–25, 27–31, 33–38, 40–44, 46–51, 53–57, 59–64, 66–70, and 72–76 would have been obvious over Zhang and Reisman.

We provided an overview of Zhang above. *See supra* Part III.B.1. Before addressing the claims, we additionally provide an overview of Reisman.

1. Overview of Reisman

Reisman describes "interactive television" (ITV), where the TV includes a set-top box (STB). Ex. 1052 ¶¶ 2, 43, 98. Reisman explains that ITV may include interactivity with the TV through a digital video recorder (DVR), which also is known as a personal video recorder (PVR). *Id.* ¶¶ 48, 60. Additionally, Reisman explains that ITV may include a featured called picture-in-picture (PIP), where a region of the TV screen presents a reduced scale video image. *Id.* ¶ 121.

2. Independent Claims 25 and 38

As discussed above, we determine that Petitioner has shown by a preponderance of the evidence that claims 25 and 38 are anticipated by Zhang or would have been obvious over Zhang.

Under an alternative theory, Petitioner contends that, "[t]o the extent Patent Owner argues that Zhang's PVR is not a 'DVR' as recited in Elements [25D] and [38D], Reisman discloses this feature." Pet. 45. Petitioner asserts that "Reisman teaches that advanced STBs in a cable

system may include a digital video recorder (DVR)." *Id.* at 45–46 (citing Ex. 1052 ¶¶ 5, 43, 48, 60, 73, 98, 112, 118, 191, 197, 212, 281–285, 296, 546). According to Petitioner, "[a] POSITA would have been motivated to include Reisman's DVR in Zhang's STB to provide a more feature-filled and individualized user experience, which in the proposed combination still includes Zhang's wideband front-end receiver components cited for performing Elements [25A]–[25E]." *Id.* at 46. Petitioner explains that "Reisman's DVR improves user experience and flexibility by allowing time-shifted and on-demand viewing, and enabling replay and trick-play (fast forwarding, rewinding, and pausing) of live programming." *Id.* (citing Ex. 1052 ¶¶ 191, 197, 212, 284); *see also id.* at 46–47 (asserting that "[a]dding Reisman's DVR to Zhang's system would have been nothing more [than] applying a known technique of integrating a DVR into a set-top box . . . to a known STB . . . that was ready for improvement to yield a predictable result" and that "[a] POSITA would have had a reasonable expectation of success").

Patent Owner does not specifically dispute Petitioner's contentions in this regard. *See* PO Resp. Based on Petitioner's argument and evidence (*see* Pet. 45–47), we find Petitioner's proposed combination of Zhang and Reisman teaches all the limitations of claims 25 and 38. We also find that Petitioner's proffered reasoning for combining Zhang and Reisman supports a legal conclusion of obviousness. *See In re Kahn*, 441 F.3d 977, 988 (Fed. Cir. 2006) ("[T]here must be some articulated reasoning with some rational underpinning to support the legal conclusion of obviousness.").

3. Independent Claim 51

Claim 51 is directed to a "method for receiving a television (TV) signal" and recites similar limitations as claim 1. For example, claim 51 recites a "receiving" step, a "digitizing" step, a "concurrently selecting" step, and a "providing" step. For these similarly recited limitations, Petitioner relies on its analysis for claim 1. Pet. 47. Patent Owner likewise relies on its arguments regarding claim 1. *See* PO Resp. 8. Based on Petitioner's argument and evidence, and for the reasons given above as to claim 1, we find that Zhang teaches the similarly recited limitations of claim 51.

Claim 51 adds the step of "configuring at least some of the plurality of desired channels as an output for a picture-in-picture display." For this limitation, Petitioner asserts that "Reisman teaches that [] advanced set-top boxes in a cable system include a 'picture-in-picture display' output for television programming." Pet. 47–48 (citing Ex. 1052 ¶¶ 73, 98, 118, 120–121, 187, 278, 291, 378, 534, 537, 546, Fig. 3). Petitioner contends that "[a] POSITA would have been motivated to include Reisman's 'picture-in-picture display' capability in Zhang's set-top box, which in the proposed combination still has the wideband front-end receiver components cited for performing Elements [51A]–[51E], to allow a user to view different content simultaneously." *Id.* at 48. Petitioner explains that Reisman's "'picture-in-picture' beneficially displays a program in a PIP window while simultaneously providing, e.g., navigation options and interactive content in other windows," and "enables 'multitasking,' by displaying, e.g., two TV programs, and swapping them between full screen and a smaller PIP window." *Id.* (citing Ex. 1052 ¶¶ 61, 63, 121, 278, 378, 546, Fig. 3); *see also id.* at 48–49 (asserting that "modifying Zhang with Reisman would

have been nothing more than the obvious application of a known technique . . . to a known device . . . that was ready for improvement to yield a predic[t]able result" and that "[a] POSITA would have had a reasonable expectation of success").

Patent Owner does not specifically dispute Petitioner's contentions in this regard. *See* PO Resp. Based on Petitioner's argument and evidence (*see* Pet. 47–49), and for the reasons given above with respect to claim 1, we find Petitioner's proposed combination of Zhang and Reisman teaches all the limitations of claim 55. We also find that Petitioner's proffered reasoning for combining Zhang and Reisman supports a legal conclusion of obviousness.

4. Independent Claim 64

Claim 64 is directed to a "method" and recites similar limitations as claims 1, 13, and 51. For example, claim 64 recites a "receiving" step, a "digitizing" step, a "digitally down converting" step, and a "picture-in-picture display." For these similarly recited limitations, Petitioner relies on its discussion of claims 1, 13, and 51. Pet. 50. Patent Owner relies on its arguments regarding claim 13. *See* PO Resp. 36. Based on Petitioner's argument and evidence (*see* Pet. 50), and for the reasons given above as to claims 1, 13, and 51, we find that the proposed combination of Zhang and Reisman teaches all the limitations of claim 64, and that Petitioner's proffered reasoning for combining Zhang and Reisman supports a legal conclusion of obviousness.

8. Dependent Claims

Each of claims 9–12, 21–24, 27–31, 33–37, 40–44, 46–50, 53–57, 59–63, 66–70, and 72–76 depends from independent claims 1, 13, 25, 38, 51, or 64. Petitioner contends that its proposed combination of Zhang and Reisman teaches the limitations recited in the dependent claims. Pet. 51–56 (citing Ex. 1013 ¶ 47; Ex. 1052 ¶¶ 8, 24, 63, 73, 86–90, 98, 125, 187, 189, 209, 235, 643–645, Fig. 1). Petitioner relies on the declaration testimony of Mr. Lett. *Id.* (citing Ex. 1002 ¶¶ 145–147, 191–207).

Patent Owner does not specifically dispute Petitioner's contentions regarding the claims 9–12, 21–24, 27–31, 33–37, 40–44, 46–50, 53–57, 59–63, 66–70, and 72–76. *See* PO Resp. Having reviewed Petitioner's argument and evidence (*see* Pet. 51–56), we find that Zhang teaches the limitations of these dependent claims.

9. Summary

In view of the foregoing, we determine that Petitioner has demonstrated by a preponderance of the evidence that claims 9–12, 21–25, 27–31, 33–38, 40–44, 46–51, 53–57, 59–64, 66–70, and 72–76 would have been obvious over Zhang and Reisman.

D. Asserted Challenge Based on Zhang and Jackson

Each of claims 2–6, 14–18, 26–30, and 39–43 depends from independent claims 1, 13, 25, or 38. Petitioner asserts that these dependent claims would have been obvious over Zhang and Jackson. Pet. 56–69. Petitioner relies on Jackson for teaching various components, including its input connector, amplifiers, filters, complex mixer, and demodulator, which Petitioner asserts can be incorporated into Zhang's system to provide a way

to implement and improve Zhang's receiver. *Id.* (citing Ex. 1013 ¶¶ 5–6, 12, 15, 23, 25–32, 38–39, 45, 47–48, Figs. 2, 3; Ex. 1057 ¶¶ 2–4, 6, 19–20, 23–27, Figs. 3, 4B, 5, 6, 7). Petitioner cites the declaration testimony of Mr. Lett as support. *Id.* (citing Ex. 1002 ¶¶ 62–64, 208–236).

Patent Owner does not specifically dispute Petitioner's contentions regarding the claims 2–6, 14–18, 26–30, and 39–43. *See* PO Resp. Having reviewed Petitioner's argument and evidence (*see* Pet. 56–69), and for the reasons given above with respect to Petitioner's challenges based on Zhang alone, we find that Petitioner's proposed combination of Zhang and Jackson teaches the limitations of theses dependent claims and that Petitioner's proffered reasoning for combining Zhang and Jackson support a legal conclusion of obviousness.

In view of the foregoing, we determine that Petitioner has demonstrated by a preponderance of the evidence that claims 2–6, 15–19, 28–32, and 42–46 would have been obvious over Zhang and Jackson.

E. Asserted Challenge Based on Zhang, Reisman, and Jackson

Each of claims 26–30, 39–43, 52–56, and 65–69 depends from independent claims 25, 38, 51, or 64. Petitioner asserts that these dependent claims would have been obvious over Zhang, Reisman, and Jackson. Pet. 56–69. Petitioner relies on Jackson for teaching various components, including its input connector, amplifiers, filters, complex mixer, and demodulator, which Petitioner asserts can be incorporated into Zhang's system to provide a way to implement and improve Zhang's receiver. *Id.* (citing Ex. 1013 ¶¶ 5–6, 12, 15, 23, 25–32, 38–39, 45, 47–48, Figs. 2, 3; Ex. 1057 ¶¶ 2–4, 6, 19–20, 23–27, Figs. 3, 4B, 5, 6, 7). Petitioner cites the

declaration testimony of Mr. Lett as support. *Id.* (citing Ex. 1002 ¶¶ 62–64, 208–236).

Patent Owner does not specifically dispute Petitioner's contentions regarding claims 26–30, 39–43, 52–56, and 65–69. *See* PO Resp. Having reviewed Petitioner's argument and evidence (*see* Pet. 56–69), and for the reasons given above with respect to Petitioner's challenge based on Zhang and Reisman, we find that Petitioner's proposed combination of Zhang, Reisman, and Jackson teaches the limitations of these dependent claims and that Petitioner's proffered reasoning for combining Zhang, Reisman, and Jackson support a legal conclusion of obviousness.

In view of the foregoing, we determine that Petitioner has demonstrated by a preponderance of the evidence that claims 26–30, 39–43, 52–56, and 65–69 would have been obvious over Zhang, Reisman, and Jackson.

F. Asserted Challenge Based on Zhang and Pandey

Petitioner asserts that claims 1, 3–9, 11, 13, 15–21, 23, 32–34, and 45–47 would have been obvious over Zhang and Pandey. Pet. 69–75. Petitioner cross-references its discussion of Zhang's teaching of the serial interface of claims 1, 13, 34, 47, 60, and 73 as well as the parallel interface of claims 33, 46, 59, and 72. *Id.* at 69. Petitioner further relies on Pandey for also teaching serial and parallel interfaces, which Petitioner says can be incorporated into Zhang's system to provide a way to implement Zhang's digital circuit. *Id.* at 69–75 (citing Ex. 1013 ¶¶ 28–30, 37, 40, 42, 44, 47–48, Fig. 2; Ex. 1014, code (57), 1:15–2:38, 2:64–3:5, 5:50–53, 6:10–15, 6:44–53, 7:13–19, 10:24–53, 10:58–11:19, 13:33–14:7, 29:44–30:9, 30:31–31:12,

31:15–22, 31:56–63, 32:7–15, Figs. 2–3, 37–39). Petitioner cites the declaration testimony of Mr. Lett as support. *Id.* (citing Ex. 1002 ¶¶ 237–248).

Patent Owner does not specifically dispute Petitioner's contentions in this regard. *See* PO Resp. Having reviewed Petitioner's argument and evidence (*see* Pet. 69–75), and for the reasons given above with respect to Petitioner's challenges based on Zhang alone, we find that Petitioner's proposed combination of Zhang and Pandey teaches the limitations of claims 1, 3–9, 11, 13, 15–21, 23, 32–34, and 45–47 and that Petitioner's proffered reasoning for combining Zhang and Pandey support a legal conclusion of obviousness.

In view of the foregoing, we determine that Petitioner has demonstrated by a preponderance of the evidence that claims 1, 3–9, 11, 13, 15–21, 23, 32–34, and 45–47 would have been obvious over Zhang and Pandey.

G. Asserted Challenge Based on Zhang, Reisman, and Pandey

Each of claims 9–12, 21–24, 32–34, 45–47, 58–60, 71–73 depends from independent claims 1, 13, 25, 38, 51, and 64. Petitioner asserts that these dependent claims would have been obvious over Zhang, Reisman, and Pandey. Pet. 69–75. Petitioner cross-references its discussion of Zhang's teaching of the serial interface of claims 1, 13, 34, 47, 60, and 73 as well as the parallel interface of claims 33, 46, 59, and 72. *Id.* at 69. Petitioner further relies on Pandey for also teaching serial and parallel interfaces, which Petitioner says can be incorporated into Zhang's system to provide a way to implement Zhang's digital circuit. *Id.* at 69–75 (citing Ex. 1013

¶¶ 28–30, 37, 40, 42, 44, 47–48, Fig. 2; Ex. 1014, code (57), 1:15–2:38, 2:64–3:5, 5:50–53, 6:10–15, 6:44–53, 7:13–19, 10:24–53, 10:58–11:19, 13:33–14:7, 29:44–30:9, 30:31–31:12, 31:15–22, 31:56–63, 32:7–15, Figs. 2–3, 37–39). Petitioner cites the declaration testimony of Mr. Lett as support. *Id.* (citing Ex. 1002 ¶¶ 237–248).

Patent Owner does not specifically dispute Petitioner's contentions in this regard. *See* PO Resp. Having reviewed Petitioner's argument and evidence (*see* Pet. 69–75), and for the reasons given above with respect to Petitioner's challenge based on Zhang and Reisman, we find that Petitioner's proposed combination of Zhang, Reisman, and Pandey teaches the limitations of claims 9–12, 21–24, 32–34, 45–47, 58–60, 71–73 and that Petitioner's proffered reasoning for combining Zhang, Reisman, and Pandey support a legal conclusion of obviousness.

In view of the foregoing, we determine that Petitioner has demonstrated by a preponderance of the evidence that claims 9–12, 21–24, 32–34, 45–47, 58–60, 71–73 would have been obvious over Zhang, Reisman, and Pandey.

H. Asserted Challenge Based on Zhang, Jackson, and Pandey

Each of claims 2–6 and 14–18 depends from independent claims 1 or 13. Petitioner asserts that these dependent claims would have been obvious over Zhang, Jackson, and Pandey. Pet. 75. Petitioner cross-references its discussion regarding its challenge based on Zhang and Jackson as well as its challenge based on Zhang and Pandey. *Id.* (citing Ex. 1002 ¶ 249).

Patent Owner does not specifically dispute Petitioner's contentions for this challenge. *See* PO Resp. Having reviewed Petitioner's argument and

evidence (*see* Pet. 75), and for the reasons given above with respect to Petitioner's challenge based on Zhang and Jackson as well as its challenge based on Zhang and Pandey, we find that Petitioner's proposed combination of Zhang, Jackson, and Pandey teaches the limitations of claims 2–6 and 14–18 and that Petitioner's proffered reasoning for combining Zhang, Jackson, and Pandey support a legal conclusion of obviousness.

In view of the foregoing, we determine that Petitioner has demonstrated by a preponderance of the evidence that claims 2–6 and 14–18 would have been obvious over Zhang, Jackson, and Pandey.

IV. CONCLUSION

For the reasons given, Petitioner has demonstrated by a preponderance of the evidence that claims 1–76 of the '206 patent are unpatentable as follows.[6]

[6] Should Patent Owner wish to pursue amendment of the challenged claims in a reissue or reexamination proceeding subsequent to the issuance of this Decision, we draw Patent Owner's attention to the April 2019 Notice Regarding Options for Amendments by Patent Owner Through Reissue or Reexamination During a Pending AIA Trial Proceeding. *See* 84 Fed. Reg. 16,654 (Apr. 22, 2019). If Patent Owner chooses to file a reissue application or a request for reexamination of the challenged patent, we remind Patent Owner of its continuing obligation to notify the Board of any such related matters in updated mandatory notices. *See* 37 C.F.R. §§ 42.8(a)(3), (b)(2).

Claims	35 U.S.C. §	Reference(s)/ Basis	Claims Shown Unpatentable	Claims Not shown Unpatentable
1, 3–7, 9, 11, 13, 15–19, 21, 23, 25, 27–31, 33–35, 38, 40–44, 46–48	102	Zhang	1, 3–7, 9, 11, 13, 15–19, 21, 23, 25, 27–31, 33–35, 38, 40–44, 46–48	
1, 3–7, 9, 11, 13, 15–19, 21, 23, 25, 27–31, 33–35, 38, 40–44, 46–48	103(a)	Zhang	1, 3–7, 9, 11, 13, 15–19, 21, 23, 25, 27–31, 33–35, 38, 40–44, 46–48	
9–12, 21–25, 27–31, 33–38, 40–44, 46–51, 53–57, 59–64, 66–70, 72–76	103(a)	Zhang, Reisman	9–12, 21–25, 27–31, 33–38, 40–44, 46–51, 53–57, 59–64, 66–70, 72–76	
2–6, 14–18, 26–30, 39–43	103(a)	Zhang, Jackson	2–6, 14–18, 26–30, 39–43	
26–30, 39–43, 52–56, 65–69	103(a)	Zhang, Reisman, Jackson	26–30, 39–43, 52–56, 65–69	
1, 3–9, 11, 13, 15–21, 23, 32–34, 45–47	103(a)	Zhang, Pandey	1, 3–9, 11, 13, 15–21, 23, 32–34, 45–47	
9–12, 21–24, 32–34, 45–47, 58–60, 71–73	103(a)	Zhang, Reisman, Pandey	9–12, 21–24, 32–34, 45–47, 58–60, 71–73	
2–6, 14–18	103(a)	Zhang, Pandey, Jackson	2–6, 14–18	
Overall Outcome			1–76	

V. ORDER

In consideration of the foregoing, it is hereby

ORDERED that claims 1–76 of the ’206 patent have been shown to be unpatentable; and

FURTHER ORDERED that, because this is a Final Written Decision, parties to the proceeding seeking judicial review of the decision must comply with the notice and service requirements of 37 C.F.R. § 90.2.

PETITIONER:

Frederic Meeker
Michael S. Cuviello
Harry W. Porter
Paul T. Qualey
Joshua L. Davenport
BANNER & WITCOFF, LTD.
fmeeker@bannerwitcoff.com
mcuviello@bannerwitcoff.com
wporter@bannerwitcoff.com
pqualey@bannerwitcoff.com
jdavenport@bannerwitcoff.com

PATENT OWNER:

Jason A. Engel
Erik J. Halverson
Kyle M. Kantarek
Nolan R. Hubbard
K&L GATES LLP
jason.engel.ptab@klgates.com
erik.halverson@klgates.com
kyle.kantarek@klgates.com
nolan.hubbard@klgates.com

Kenneth J. Weatherwax

Parham Hendifar
Nathan Lowenstein
LOWENSTEIN & WEATHERWAX LLP
weatherwax@lowensteinweatherwax.com
hendifar@lowensteinweatherwax.com
lowenstein@lowensteinweatherwax.com