US 20060256799A1

(19) United States

(12) Patent Application Publication (10) Pub. No.: US 2006/0256799 A1

Eng (43) Pub. Date: Nov. 16, 2006

(54) **BROADBAND LOCAL AREA FULL-SERVICE BACKBONE NETWORK**

(76) Inventor: **John Wai-Tsang Eng**, Westminster, CO (US)

Correspondence Address:
JOHN W. ENG
1134 Lemans Ter
Sunnyvale, CA 80031 (US)

(21) Appl. No.: **10/908,405**

(22) Filed: **May 11, 2005**

Publication Classification

(51) **Int. Cl.**
H04L 12/28 (2006.01)

(52) **U.S. Cl.** **370/401**

(57) **ABSTRACT**

A point-to-multipoint broadband local area network (BLAN) system comprising a local area modem controller (LAMC) and plurality of local area modems (LAMs) is capable of voice, video and data communications. The medium is capable of reliably supporting multiple downstream and upstream channels to meet the need of high-capacity and QoS of digital entertainment. Media-access-control (MAC) functions in the LAMC and the LAMs coordinate packet stream transmissions. The shared medium can be a tree-branch coaxial cable; the LAMs can be legacy DOCSIS or EuroDOCSIS cable modems or enhanced cable modems with multiple channels; the MAC can be a DOCSIS MAC or an enhanced multi-channel full-service MAC (fsMAC). The physical layer of each channel can be that of DOCSIS, wideband, or other technologies. Residential gateway and wide-area broadband modem functions can also be incorporated into the LAMC. Cable TV programming channels and the BLAN can shared the same cable spectrum.

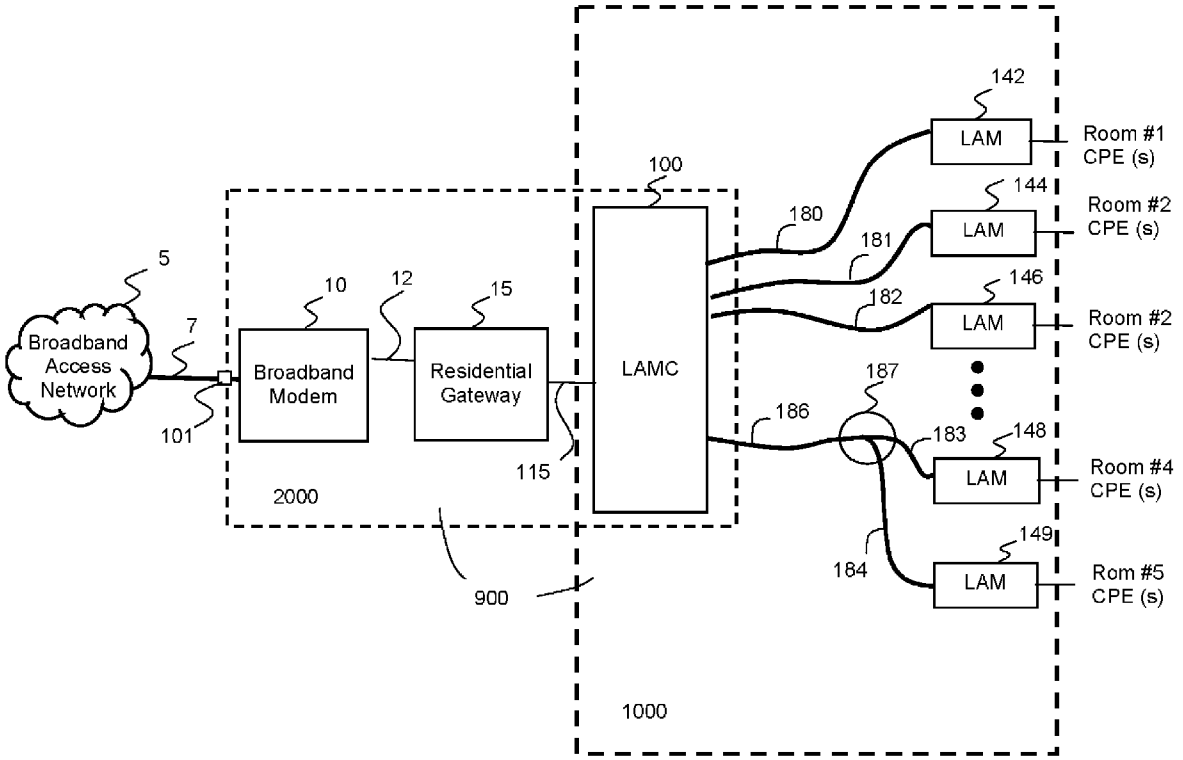

Comcast, Ex. 1237

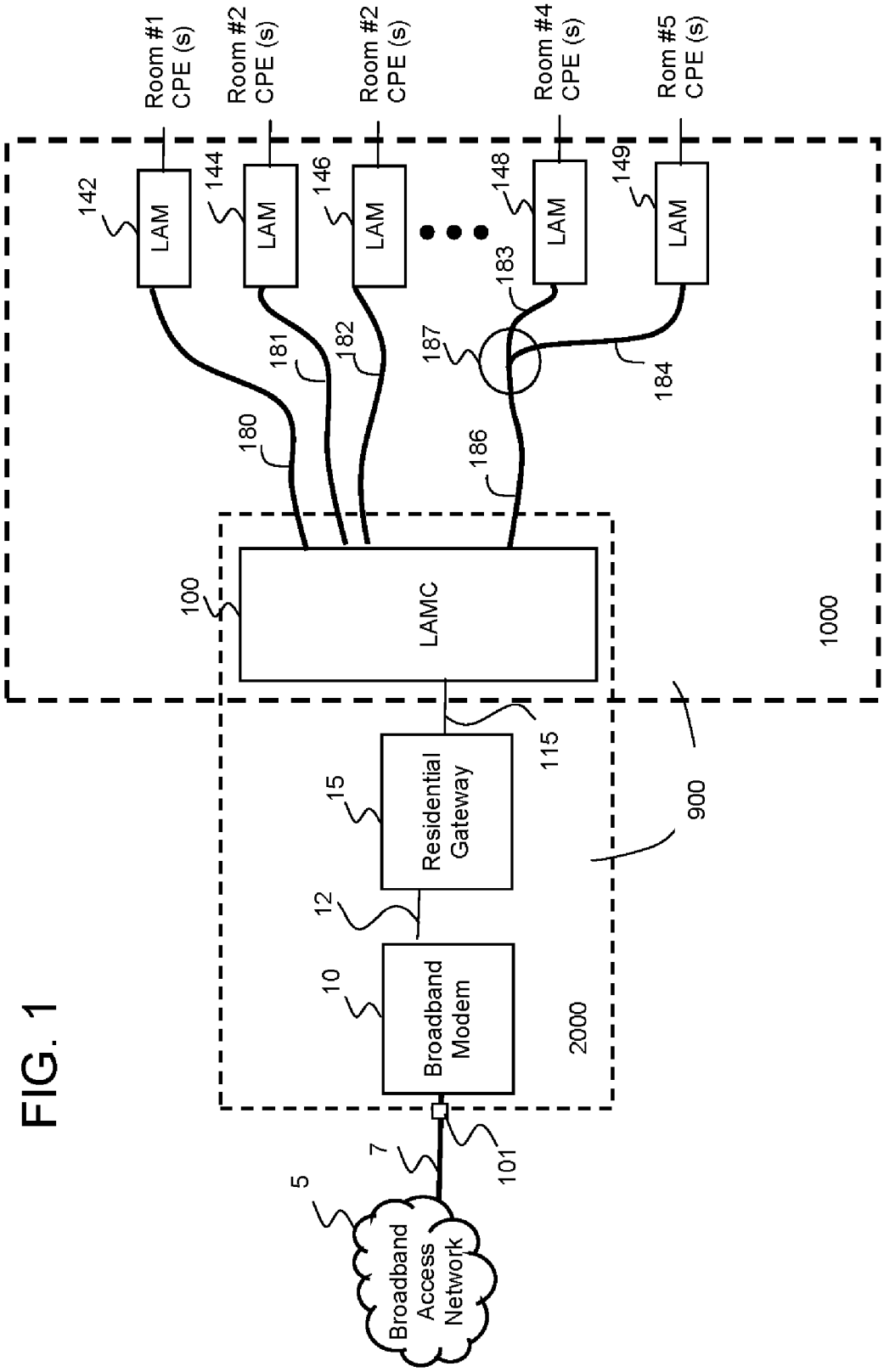
Room #1 CPE (s)
Room #2 CPE (s)
Room #2 CPE (s)
Room #4 CPE (s)
Rom #5 CPE (s)
142
144
146
148
149
LAM
LAM
LAM
LAM
LAM
183
181
182
187
184
180
186
100
LAMC
1000
115
15
Residential Gateway
900
12
10
Broadband Modem
2000
7
101
5
Broadband Access Network

FIG. 1

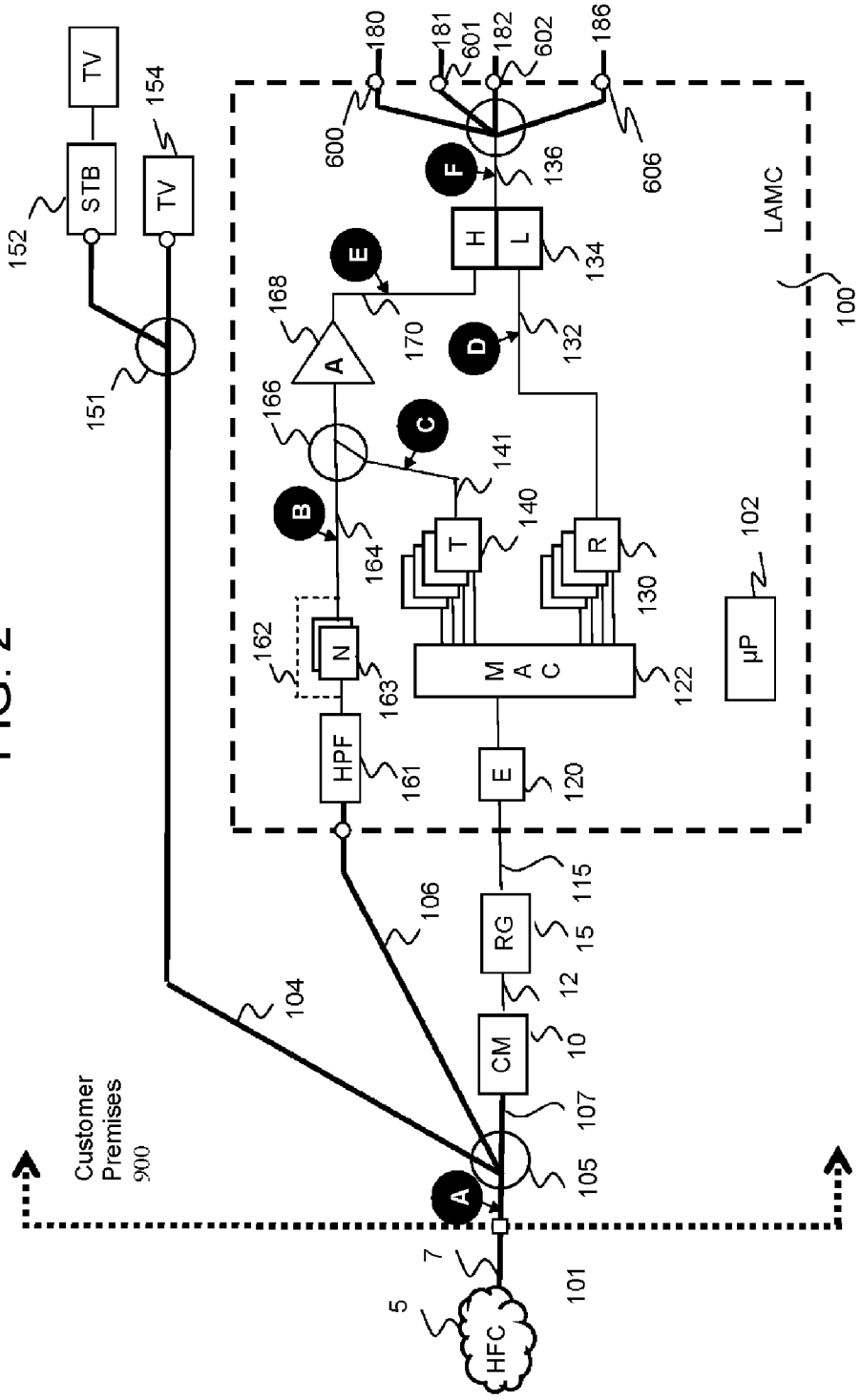
TV
STB
TV
152
154
151
180
181
601
182
602
186
600
606
F
136
H
L
134
E
168
170
A
166
D
132
C
141
B
164
T
140
R
130
162
N
163
M
A
C
122
HPF
161
E
120
LAMC
100
102
µP
106
115
RG
15
12
CM
10
104
107
Customer
Premises
900
A
105
7
101
5
HFC

FIG. 2

FIG. 3

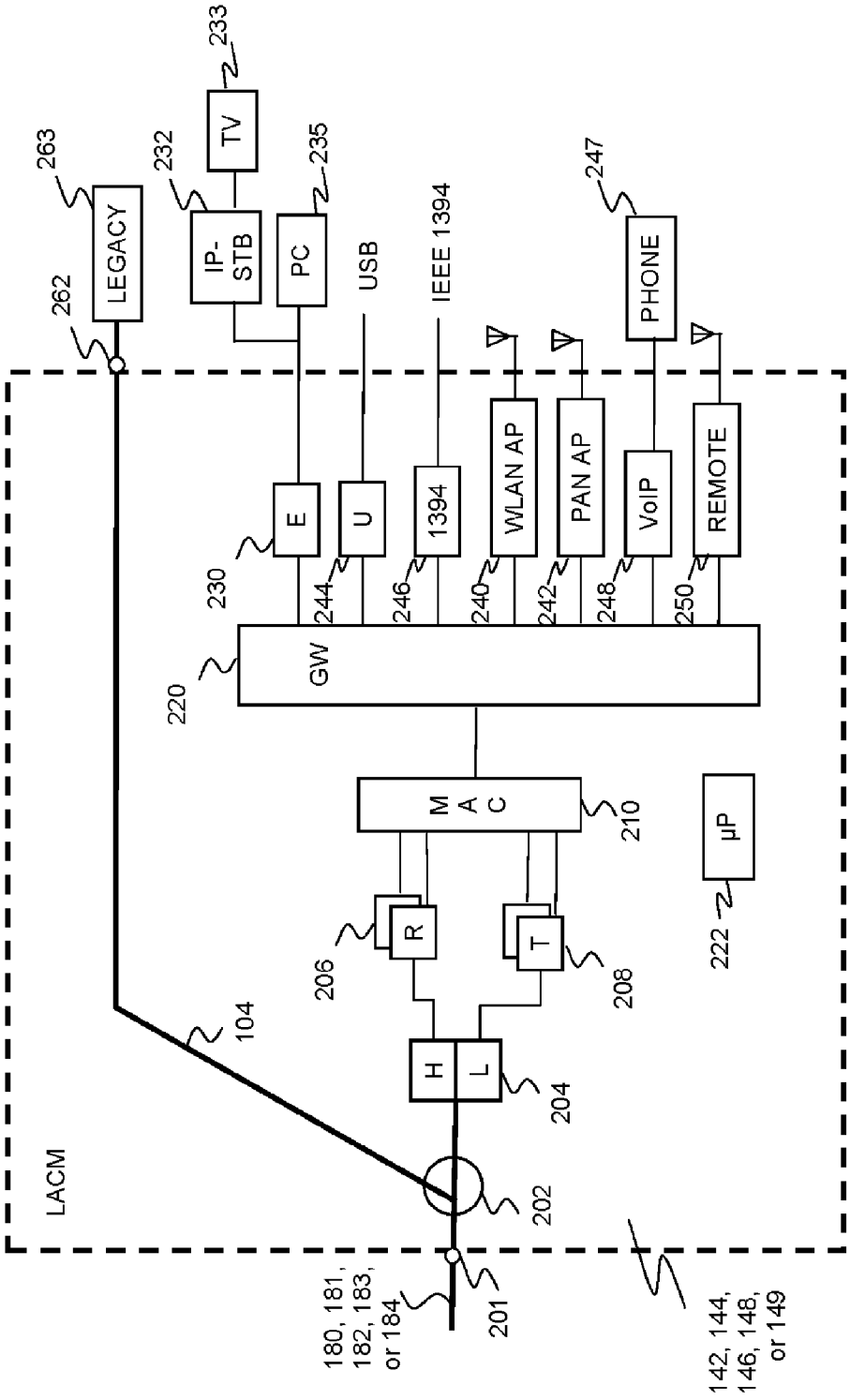
LACM
LEGACY
IP-STB
TV
PC
USB
IEEE 1394
PHONE
E
U
1394
WLAN AP
PAN AP
VoIP
REMOTE
GW
M A C
R
T
H
L
μP
104
180, 181, 182, 183, or 184
201
202
204
206
208
210
220
222
230
232
233
235
240
242
244
246
247
248
250
262
263
142, 144, 146, 148, or 149

FIG. 4

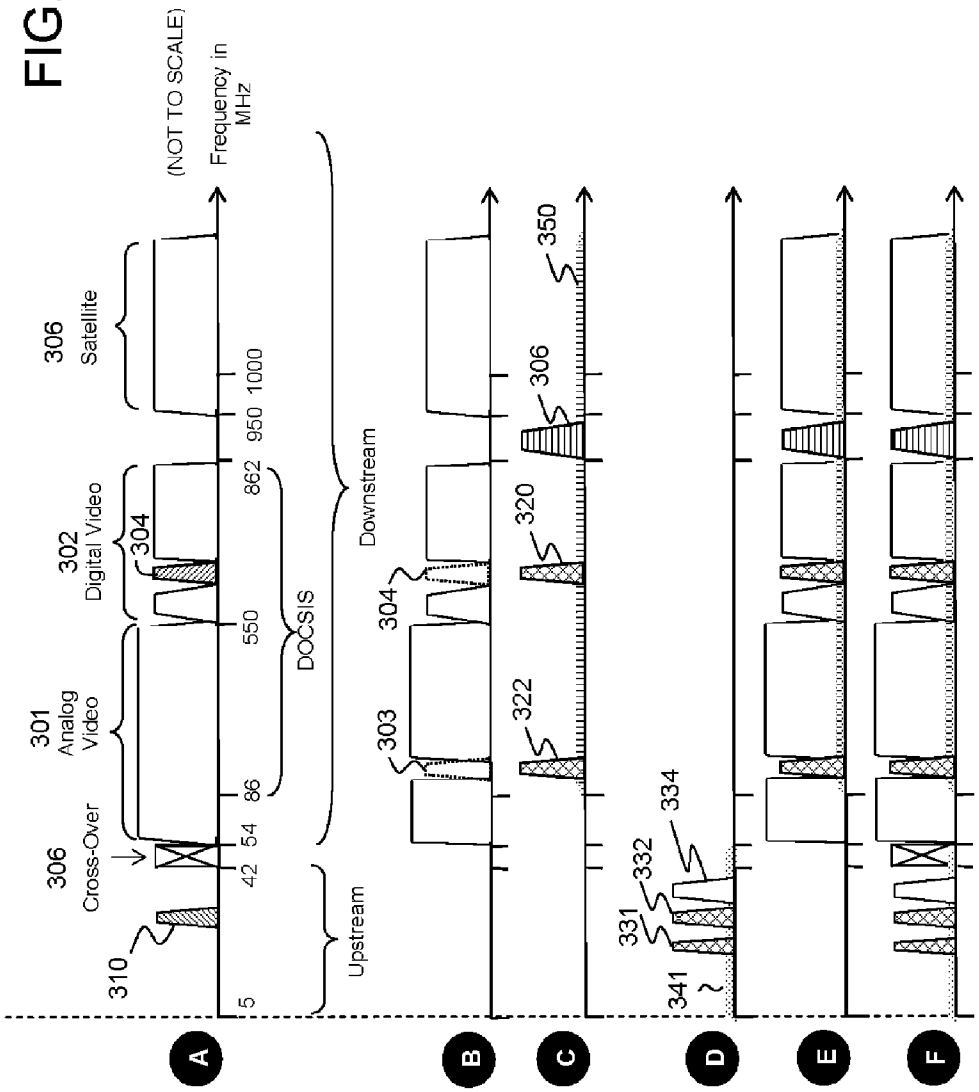
(NOT TO SCALE)
Frequency in MHz
306
Satellite
302
Digital Video
301
Analog Video
306
Cross-Over
310
304
5
42
54
86
550
862
950
1000
DOCSIS
Upstream
Downstream
303
304
322
320
306
350
331
332
334
341
A
B
C
D
E
F

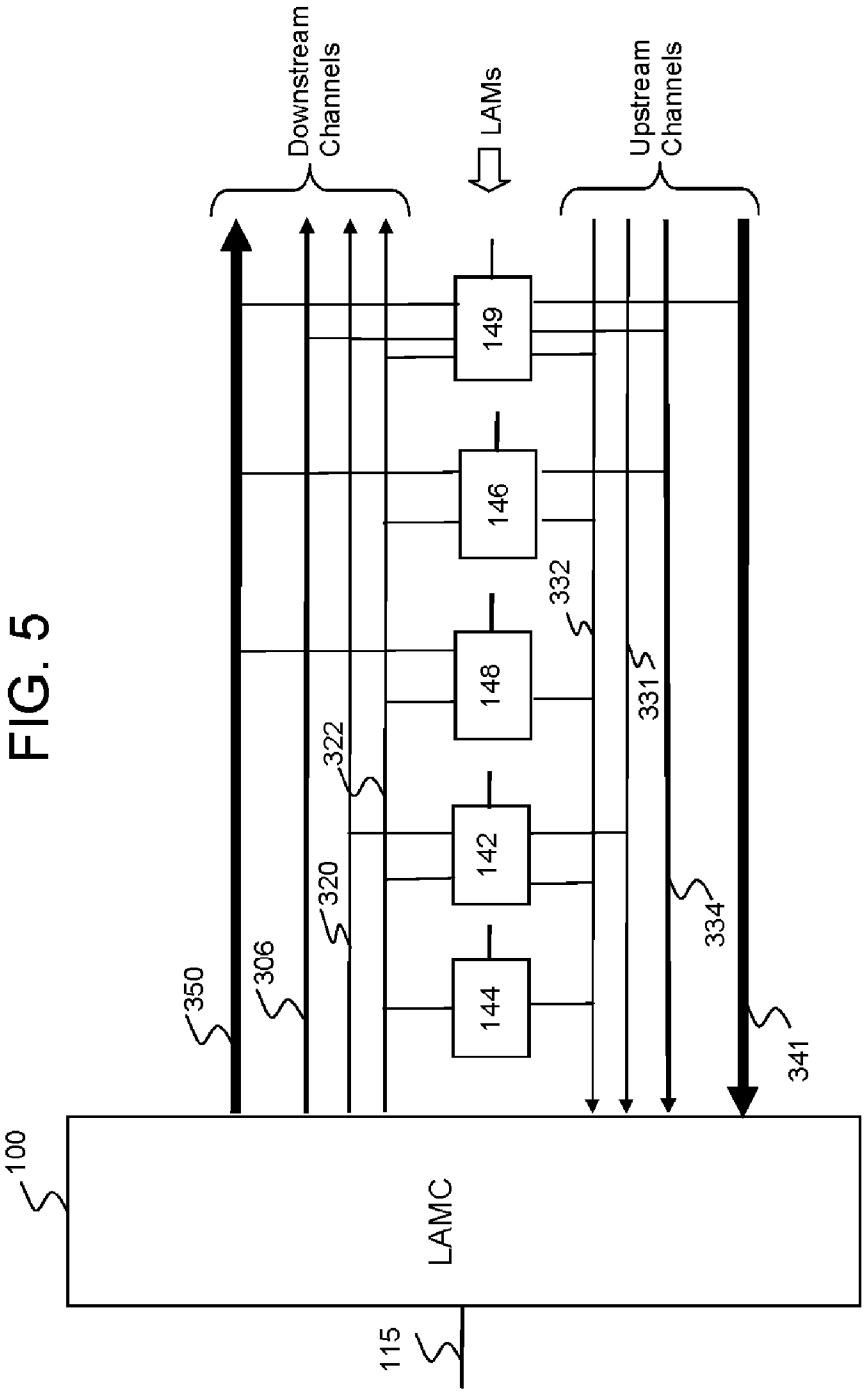
Downstream Channels
LAMs
Upstream Channels
149
146
148
142
144
332
331
322
320
334
350
306
341
100
LAMC
115

FIG. 5

BROADBAND LOCAL AREA FULL-SERVICE BACKBONE NETWORK

[0001] This application incorporates by reference the teachings of U.S. patent application Ser. No. 10/122,828 "FULL-SERVICE BROADBAND CABLE MODEM SYSTEM" filed by the same inventor of this application, published Feb. 20, 2003 for details of full-service cable modem (fsCM) systems and full-service media-access-control (fsMAC).

BACKGROUND OF THE INVENTION

[0002] 1. Technical Field of the Invention

[0003] This invention related to the field of multi-channel point-to-multipoint local area network communications method and apparatus supporting voice, video and data. It generally applies to shared wired-medium such as, but not limited to, coaxial cable.

[0004] 2. Prior Art

[0005] There is an increasing need for a home backbone network with enough capacity and managed quality-of-service to serve multiple high-definition audio-visual streams as well as other voice, music, and data traffic generated by Internet appliances such as personal computers, printers, media servers, MP3 players, high-definition personal video recorders, wireless LAN (local area network) and wireless PAN (personal area network) access points.

[0006] Broadband coax medium has the advantages of ubiquity and intrinsic high bandwidth (in Gbps), especially suitable for such a home backbone network, comparing to other "no new wire" media such as wireless, unshielded twisted-pair telephone wires, or power-line.

[0007] Broadband point-to-multipoint multiple access networks using coaxial cable as a medium are described in [1 Dahod] U.S. Pat. No. 4,500,989 "DIGITAL COMMUNICATION SYSTEM" issued to Dahod, [2 Grobicki] U.S. Pat. No. 5,471,474 "COMMUNICATIONS HIGHWAY NETWORK SYSTEM" issued to Grobicki et al., [3 DOCSIS] CM-SP-RFIv2.0-108-050408 "DOCSIS 2.0 SPECIFICATION" available on www.cablemodem.com/downloads/specs/, [4 Terry] U.S. patent application Ser. No. 10/071,007 "MULTI-BAND COAX EXTENDER FOR IN-BUILDING DIGITAL COMMUNICATION SYSTEMS" filed by Terry et al., [5 Gurantz] U.S. patent application Ser. No. 09/910,412 "NETWORK INTERFACE DEVICE AND BROADBAND LOCAL AREA NETWORK USING COAXIAL CABLE" filed by Gurantz et al., [6 Morelli] U.S. patent application Ser. No. 10/852,002 "NETWORKING METHODS AND APPARATUS" filed by Morelli et al., [7 Ophir] U.S. patent application Ser. No. 10/935,963 "IMPLEMENTING A HYBRID WIRELESS AND COAXIAL CABLE NETWORK" filed by Ophir et al., [8 Robertson] U.S. patent application Ser. No. 10/924,077 "FULL DUPLEX WIDEBAND COMMUNICATIONS SYSTEM FOR A LOCAL COAXIAL NETWORK" filed by Robertson et al., [9 Eng] U.S. patent application Ser. No. 10/122,828 "FULL-SERVICE BROADBAND CABLE MODEM SYSTEM" filed by the same inventor of this invention, and [10 Lind] U.S. patent application Ser. No. 10/446,511 "WIDEBAND DOCSIS ON CATV SYSTEMS USING PORT-TRUNKING" filed by Lind et al., each of which is incorporated herein by reference.

[0008] [1 Dahod][2 Grobicki][6 Morelli] disclosed the using of a frequency translator at the root of the coaxial cable topology to reflect upstream transmissions to all stations. [5 Gurantz] disclosed a method of using a non-matching filter to reflect upstream transmissions back to all stations. [4 Terry][6 Morelli][7 Ophir] used spectrum above 750 MHz for upstream and downstream channels to avoid conflict with the spectrum used by conventional cable TV programming channels. [7 Ophir] disclosed a way to use coaxial cable to extend the reach of wireless LAN transmission. [8 Robertson] described a coaxial home network that used channels above 750 MHz for full-duplex point-to-point communications between two stations.

[0009] [3 DOCSIS] disclosed the data-over-cable standards for a sub-split hybrid fiber-coaxial (HFC) cable infrastructure with a centralized controller (cable modem termination system, CMTS) residing at the root of the coaxial cable topology with a media-access-control (MAC) for coordinating the forwarding of packets to and from a plurality of cable modems. While [3 DOCSIS] has a robust MAC layer and the intelligence at the headend, and enjoys a consumer level pricing for the large volume of cable modems, it is nevertheless designed for metropolitan area operations for service providers; the CMTS is prohibitively expensive for residential consumer use. Moreover, the MAC is not scalable for providing the capacity for video operations.

[0010] [9 Eng] disclosed a multi-channel MAC called fsMAC (full-service MAC) that scales the network capacity of a data-over-HFC network by adding multiple upstream and downstream channels, with a DCPC-UCC (downstream control and payload channel—upstream control channel) control channel-pair for efficient upstream multiple access and high network capacity in both upstream and downstream directions.

[0011] [10 Lind] disclosed an enhancement to the DOCSIS MAC for adding wideband downstream and upstream channels to increase the capacity and burst rate of a DOCSIS HFC network.

[0012] Using the spectrum above conventional cable TV channels requires changes to the coaxial network. It is not compatible with legacy cable modems and cable set-top boxes (STBs) and increases the complexity and cost to the home networking infrastructure.

[0013] Therefore there is a need for an improved, reliable, high-capacity and low-cost broadband local area networking backbone for homes and premises to address the shortcomings of the prior art. It is desirable to take advantages of the legacy cable modem technology while providing the capacity and quality-of-service (QoS) required by multimedia communications of voice, video and data within the premises at consumer-level price.

BRIEF SUMMARY OF THE INVENTION

[0014] According to the teachings of the present invention, a point-to-multipoint broadband local area network (BLAN) system comprising a shared medium, a local area modem controller (LAMC) located at the root of the medium topology, and one or more in-building local area modems (LAMs) is capable of voice, video and data communications. The medium is capable of reliably supporting

multiple downstream and upstream channels for the high-capacity need of digital entertainment such as multiple high-definition television audio-visual packet streams. Media-access-control (MAC) functions in the LAMC and the LAMs coordinate the packet stream transmissions to meet the quality-of-service requirements of multimedia communications. The physical layer (PHY) of each of the channels can be the PHY of DOCSIS or EuroDOCSIS, wide-band, ultra-wideband, OFDM, SDM or other technologies.

[0015] Other networking functions such as residential gateway (RG) can also be incorporated into the LAMC or provided externally. High-speed Internet access via a broadband modem including wide-area HFC cable modem, DSL modem, Fiber-to-the-Premises (FTTP) modem, two-way satellite modem, and fixed wireless modem, can be coupled to the LAMS via the external or internal RG.

[0016] The shared medium can be a tree-branch in-premises coaxial cable. The LAMs can be legacy DOCSIS or EuroDOCSIS cable modems. The MAC implements the minimum functionality of a legacy DOCSIS MAC and other DOCSIS functionalities to initialize and register the DOCSIS or EuroDOCSIS cable modems. LAMs with multiple DOCSIS or EuroDOCSIS channels can be accommodated by enhancing the MAC with multi-channel features of a full-service MAC (fsMAC). Cable TV programming channels and the BLAN can shared the same cable spectrum.

[0017] In its simplest form, each LAM has an Ethernet or USB outlet for interfacing to in-room Internet appliances or other CPE (customer premises equipment) devices. More advanced versions of the LAMs have other CPEs embedded.

[0018] The QoS required by different applications such as voice, video and data can be easily accommodated by the LAMC because all transmissions to and from the LAMs are controlled and allocated by the LAMC according to the QoS needs of the applications. The capacity can be expanded according to need by adding the number of channels, limited only by the spectrum availability and cost of implementation.

[0019] In accordance with still another further aspect of the present invention, if backward compatibility with legacy DOCSIS or EuroDOCSIS cable modems is not required, further simplification of the LAMC and LAMs are possible to reduce the cost and streamline the initialization and registration process. Furthermore, downstream channels can also be located beyond the DOCSIS or EuroDOCSIS frequency range for coexistence with conventional cable TV programming channels.

[0020] The wide-area HFC cable modem and RG functionalities can be embedded into the LAMC so that the HFC cable modem downstream channels can be easily identified and be reused by the BLAN. Alternatively the LAMC downstream channels can be allocated by the cable operator, thus avoiding conflict with cable TV programming channels. The upstream spectrum is isolated by the wideband HFC cable modem and thus can be reused by the local area modems (LAMs).

[0021] To preserve the cable TV programming channels, downstream channels identified to be used for the BLAN are filtered out before combining with the LAMC-generated downstream channels and the LAMs-generated upstream channels.

[0022] Although this invention is described herein in terms of a coaxial cable medium, any other shared medium with point-to-multipoint topology in a local area environment such as wireless, power-line, or passive optical fiber can be benefited by the teachings of this invention.

BRIEF DESCRIPTION OF THE DRAWINGS

[0023] **FIG. 1** is a high-level block diagram of a broadband local area network system for a coaxial cable medium.

[0024] **FIG. 2** is a block diagram of the preferred embodiment of a broadband coaxial local area backbone network with a widearea HFC cable modem; it also shows the details of a local area modem controller (LAMC).

[0025] **FIG. 3** is a detailed diagram of an exemplary implementation a local area modem (LAM) embedded with CPE devices and networking interfaces.

[0026] **FIG. 4** shows the channel line-ups at various test points identified in **FIG. 2**; it also shows how the downstream and upstream channels reuse the cable TV channels.

[0027] **FIG. 5** logically shows the coexistence of legacy cable modems and enhanced LAMs with various multi-channel capabilities.

DETAILED DESCRIPTION

[0028] Referring to **FIG. 1**, a high level block diagram of a broadband local area network system based on coaxial cable is shown. A broadband service provider's access network **5** provides high-speed Internet access, digital video and voice-over-Internet Protocol (VoIP) services to the residence through a broadband modem **10** located on premises **900**. Entry for the broadband service is through wire **7** to a point-of-entry **101**. Examples of broadband modems include: DOCSIS/EuroDOCSIS cable modems for hybrid-fiber-coax (HFC), various versions of digital subscriber line (DSL) modems, fiber-to-the-premises (FTTP) modem, fixed or wideband wireless modem, and two-way satellite modem.

[0029] The broadband modem **10** is typically connected to a Residential Gateway (RG) **15**, which is in turn connected to a coaxial cable broadband local area backbone network **1000**.

[0030] The exemplary home backbone network **1000** comprises of a local area modem controller (LAMC) **100** and coaxial cable segments **180**, **181**, **182**, and **186**. The cable **186** is further split into cable segments **183** and **184** through a splitter **187**. Each of the cable segments **180**, **181**, **182**, **183**, and **184** is respectively connected to a local area modem (LAM) **142**, **144**, **146**, **148**, and **149** in each room (in this example, there are five rooms in the premises being networked). Each LAM **142** has at least an Ethernet interface available for interfacing to the Internet appliances or customer premises equipment (CPEs) in the room.

[0031] In another embodiment, the broadband modem **10**, and/or RG can be embedded into the LAMC **100** (shown as block **2000** in **FIG. 1**) to further optimize the performance, functionality and cost.

Preferred Embodiment of Home Backbone with Cable TV and Cable Broadband Provider

[0032] **FIG. 2** is a preferred embodiment of the present invention for the broadband coaxial cable home network that also uses DOCSIS or EuroDOCSIS cable modem and cable TV programming services.

[0033] Referring to **FIG. 2**, cable TV programming channels and DOCSIS or EuroDOCSIS cable modem channels enter coaxial cable part **101** of the wide-area HFC broadband access network **5** into the premises **900** through the point-of-entry **101** via the coaxial cable **7**. In the premises, the RF signal in the coax **7** is further split by splitter **105** into three paths: legacy coax **104**, coax to LAMC RF input **106**, and coax to wide-area HFC DOCSIS or EuroDOCSIS cable modem RF input **107**.

[0034] The legacy coax **104** is further divided by splitter **151** to support legacy devices such as a legacy set-top box **152** and a legacy analog TV **154**. The coax path **104** is used to ensure full backward compatibility of existing legacy devices and no home network support is needed in that area of the premises. The coax path **104** is not essential to the operation of this broadband local area network, but is included for clarity and completeness.

[0035] The coax path **107** is connected to a conventional wide-area HFC DOCSIS or EuroDOCSIS cable modem **10**, which is further connected to a residential gateway (RG) **15** via a network interface **12** such as an Ethernet CAT-5 cable or USB. The RG **110** performs packet filtering, NAT address translation, firewall, and other security and routing/bridging functions; and forwards the packets to and from the home backbone network **1000**, via a network cable **115**, to a network interface **120** coupled to a media-access-control (MAC) function **122**.

[0036] The MAC **122** coordinates the forwarding of packets between multi-channel transmitter(s) **140** and multi-channel receiver(s) **130**. The MAC **122** also arbitrates upstream multiple-access packet transmissions from two or more of the local access cable modems (LAMs) **142**, **144**, **146**, **148** and **149**; and schedules packet transmissions downstream and upstream to achieve the quality of service required by applications.

[0037] The MAC **122** can be implemented with both digital logic hardware, and/or software programs under the control of one or more microprocessors **102**.

[0038] Each of the channels of the multi-channel transmitter(s) **140** and receiver(s) **130** can be, but not limited to, one of the following types:

[0039] Conventional DOCSIS/EuroDOCSIS downstream QAM channel,

[0040] Conventional DOCSIS/EuroDOCSIS upstream ATDMA/S-CDMA channel.

[0041] Wideband channel consisted of two or more DOCSIS/EuroDOCSIS channels being bonded or aggregated,

[0042] Wideband channel using channel bandwidth wider than conventional DOCSIS/EuroDOCSIS downstream or upstream channels,

[0043] Wideband channel that uses OFDM modulation scheme,

[0044] Wideband channel that uses carrier-less modulation schemes such as UWB (ultra-wideband) and SDM (Sub-band Division Modulation) with wavelet filters.

[0045] These physical layer technologies are well-known in the art and will not be repeated here.

[0046] One skill in the art will use various combinations of the number of channels and modulation types to optimize for Silicon cost, spectral efficiency and performance. In one example, a broadband LAN with two DOCSIS or EuroDOCSIS downstream and two upstream channels provides about 80 Mbps/60 Mbps in the downstream and upstream directions respectively, sufficient for most full-service multimedia audio-visual streaming, voice and data communications within a digital home.

[0047] Depending on the advance of Silicon and DSP technology, the LAMC **100** can be scaled with many channels up to the entire upstream and downstream spectrum available for the broadband home network.

Downstream Channels Insertion

[0048] Since the downstream spectrum of a conventional HFC network is occupied by cable TV video programming channels and DOCSIS/EuroDOCSIS channels, and the upstream spectrum of a conventional sub-split HFC plant is occupied by DOCSIS/EuroDOCSIS upstream channels (and perhaps other reverse channels for applications such as plant monitoring and legacy pay-per-view), occupied channels must be freed up for use in the home backbone network.

[0049] Channels can be made available (but not limited to) by one of the following methods:

[0050] (1) The cable service provider assigns downstream channel(s) for home networking. In this case, there is no conflict with the channel line-up. The downstream channels are tuned to the assigned channel frequencies and are inserted into the downstream spectrum. Notch filters **163** can be bypassed via RF path **162**.

[0051] (2) If no cable TV programming is subscribed, the entire cable TV downstream spectrum (54-870 MHz in DOCSIS, 65-870 MHz in EuroDOCSIS) can be used for home networking without conflict.

[0052] (3) Reuse the downstream channel(s) used for the DOCSIS/EuroDOCSIS cable modem **10**. The DOCSIS/EuroDOCSIS downstream channel profile(s) can be learned by either the cable modem **10** or LAMs, and are then communicated to the MAC **122** via signaling.

[0053] (4) Notch out the downstream channel(s) needed for home networking at channel frequencies not currently used for other in-premises cable-ready devices, which are also connected to the home network.

[0054] (5) Use channels outside the cable TV band (typically above 870 MHz depending on the HFC network). However, in this case, conventional DOCSIS/EuroDOCSIS cable modems cannot be used for LAMs.

[0055] (6) The upstream spectrum (5-42 MHz for DOCSIS or 5-65 MHz for EuroDOCSIS) is reused in the home network without interference because the upstream spectrum is isolated by the cable modem **10** and the high-pass filter **161**.

[0056] Still referring to **FIG. 2**, cable TV programming channels will be notched out by the channel notch filters **163** (or filters if the channel used for home networking not contiguous) after filtering the programming channel RF signal **106** through the high-pass filter **161**. As described

above, the notch filter(s) **163** can be bypassed by the RF path **162** if the channels are available for use without conflict to the programming channels.

[**0057**] The output of the notch filter(s) **163** merges with the output from one or more transmitters **140** via path **141**, using a combiner **166**. The combined downstream signal is then amplified by RF amplifier **168**, and merged via path **170** with upstream receiver(s) path **132** in diplexer **134**.

[**0058**] The output of the diplexer **134** is distributed to the rest of the premises via splitter **140** to F-connectors **600**, **601**, **602**, and **606**, which are connected to the in-premises coaxial cable segments (typically RG 59) **180**, **181**, **182**, and **186** respectively. Each cable segment typically has a length of up to 250 to 300 feet and each cable segment is typically terminated by a conventional F-type connector in a wall outlet (not shown).

[**0059**] Each cable segment is coupled to a LAM for home networking operation. However, the cable segment can also be connected to a legacy set-top box or an analog TV.

Preferred Embodiment of the Local Area Modem (LAM)

[**0060**] There are typically three types of LAMs:

[**0061**] (1) Conventional DOCSIS/EuroDOCSIS cable modems with a single downstream-upstream channel-pair;

[**0062**] (2) Enhanced cable modems with multiple DOCSIS/EuroDOCSIS channels;

[**0063**] (3) Enhanced cable modems with a mix of DOCSIS/EuroDOCSIS channels, one or more wide-band channels.

[**0064**] Referring to **FIG. 3**, a preferred embodiment of one of the LAMs (**142**, **144**, **146**, **148** or **149** in **FIG. 1**) is detailed. The incoming RF signal in the coaxial cable segment **180**, **181**, **182**, **183**, or **184** enters the LAM via input F-connector **201**, and is then split by splitter **202**.

[**0065**] One path **104** goes to output F-connector **262** for connection to an external legacy cable-ready device such as analog TV, legacy digital or analog set-top box **263**.

[**0066**] The other path from the splitter **202** is coupled to a diplex filter **204**, which separates downstream spectrum from upstream spectrum.

[**0067**] The downstream channels are coupled to multi-channel receiver(s) **206** that are tuned to the matching transmitter(s) **140**, for demodulation, decoding, error correction and formatting and other physical layer processing to recover packets transmitted. The packets are then forwarded to MAC **210** for further processing.

[**0068**] Packets destined to the LAMC **100** are forwarded by the MAC **210** to multi-channel upstream transmitter(s) **208**, and are merged with the downstream RF in the diplex filter **204**. The transmitter(s) **208** performs formatting, encoding, modulation, up-conversion and other processing for transmitting to the matching receiver(s) **130** in the LAMC **100**.

[**0069**] The MAC **210** can be implemented using one or more microprocessors **222** with control programs and other hardware to perform media access control (MAC) functions. The MAC **210** forwards packets, through a gateway function **220**, to and from embedded network functions **230**, **244**, **246**, **240** and **242**, or CPE devices such as VoIP phone adapter **248**, or remote control receiver **250**.

[**0070**] Note that in its simplest form, the LAM is implemented with at least one network interface such as the Ethernet interface **230**. Other embedded functions are implemented as required. The exemplary embedded network functions and CPEs in **FIG. 3** are listed below:

[**0071**] (1) The Ethernet bridge **230** connecting to an external Internet Protocol (IP) set-top box **232** for delivering audio-visual programs to a conventional television **233**, and connecting to a personal computer **235** for access to high-speed Internet;

[**0072**] (2) The USB Bridge **244** for connecting to popular USB peripherals;

[**0073**] (3) The IEEE 1394 Bridge **246** for connecting to IEEE 1394 enabled devices;

[**0074**] (4) The wireless LAN (Local Area Network) Access Point **240**, for in-premises communications;

[**0075**] (5) The wireless PAN (Personal Area Network) Access Point **242**, for in-room, short-range, ultra-high-speed communications;

[**0076**] (6) The voice-over-IP telephone adapter **248** that interfaces to a conventional telephone **247**;

[**0077**] (7) The low-cost wireless remote control receiver **250**, working with a matching wireless remote control transmitter (not shown), useful for receiving video-on-demand commands for one way digital set-top boxes.

[**0078**] The gateway **220** performs functions such as bridging, switching, routing, and filtering among the external network interface devices and the home backbone network. The gateway functions can be implemented in a separate microprocessor or in the microprocessor **222**.

Exemplary Channel Plan for the Broadband Local Area Backbone Network

[**0079**] **FIG. 4** depicts an exemplary spectrum usage of the coaxial broadband home backbone network **1000** using multiple upstream and downstream DOCSIS/EuroDOCSIS, wide-band and ultra-wideband channels. Referring back to **FIG. 2**, RF signal test points A, B, C, D, E, and F correspond to the paths **7**, **164**, **141**, **132**, **170**, and **136** respectively.

[**0080**] Referring to **FIG. 4**, the test point A shows the spectrum of the sub-split two-way HFC cable plant **5** comprising an upstream DOCSIS channel **310** and a downstream DOCSIS channel **304**. The sub-split spectrum has a cross-over frequency band **306** from 42 to 54 MHz. Upstream frequency band is from 5 to 42 MHz. Typically the downstream spectrum for the HFC (54 to 870 MHz) is divided into an analog video channels band **301** (typically from 54 to 550 MHz) and a digital video channels band **302**. A Satellite band **306** typically occupies frequencies greater than 950 MHz. A DOCSIS frequency band spans from 86 to 862 MHz.

[**0081**] The test point B shows the downstream spectrum after removing the upstream channels via the high-pass filter **161**; and removing the wide-area HFC DOCSIS downstream channel **304**, and removing another downstream channel

303 in the DOCSIS downstream frequency band **301** using the notch filters **163**. The notched-out channels **303** and **304** will be used by the broadband LAN.

[**0082**] The test point C is the spectrum showing the LAMC **100**-generated DOCSIS downstream channels **322** and **320**, a wideband downstream channel **306**, and an ultra-wideband (UWB) downstream channel **350**. Note that UWB channel can span to frequencies beyond 1 GHz but can coexist with the carrier-based channels.

[**0083**] The test point D is the spectrum showing the LAM-generated DOCSIS or upstream channels **331** and **332**, a wideband channel **334**, and an ultra-wideband upstream channel **341**.

[**0084**] The test point E shows the combined downstream spectrum with the LAMC **100**-generated downstream channels **322**, **320**, **306** and **350**, the cable TV programming channels bands **301** and **302**, and the Satellite channels band **306**.

[**0085**] Finally the test point F shows the combined spectrum with the LAMC **100**-generated downstream channels **322**, **320**, **306** and **350**, the LAMs-generated upstream channels **331**, **332**, **334** and **341**, the cable TV programming channels bands **301** and **302**, and the Satellite channels band **306**. This is the spectrum that each of the LAMs sees at its RF interface to the local area coaxial network.

Coexistence of LAMs with Various Multi-Channel Capabilities

[**0086**] **FIG. 5** further illustrates how the LAMs with different channel capabilities coexist in the multi-channel broadband LAN environment. Logical channels connections are shown **FIG. 5**.

[**0087**] The LAM **144** is a conventional DOCSIS cable modem that is tuned to the DOCSIS channels **322** and **332**.

[**0088**] The LAM **142** is capable of supporting an additional DOCSIS channel-pair **320** and **331**, in additional to the DOCSIS channel-pair **322** and **332**.

[**0089**] The LAM **148** is tuned to the ultra-wideband downstream channel **350** to provided extra throughput for fast download applications, in additional to the DOCSIS channel-pair **322** and **332**.

[**0090**] LAM **146** is tuned to the ultra-wideband downstream channel **350**, and is tuned to transmit in the additional upstream channel **334**, in additional to the DOCSIS S channel-pair **322** and **332**, providing ultra-high speed in both the downstream and upstream directions.

[**0091**] LAM **149** is tuned to the ultra-wideband downstream channel **350**, the wideband downstream channel **306**, and is tuned to transmit in the additional upstream channel **334** and the upstream ultra-wideband channel **341**, in additional to the DOCSIS channel-pair **322** and **332**, providing ultra-high speed in both the downstream and upstream directions.

[**0092**] Note that the configuration shown in **FIG. 5** is exemplary only, many other combinations are possible. In any case, different types of LAMs can coexist in the multi-channel home network environment. Since all LAMs have a common DOCSIS channel-pair, they can be discovered and configured under the control of the multi-channel MAC **122** in the LAMC **100**.

Multi-Channel Point-to-Multipoint MAC Protocol Operation

[**0093**] The LAMC can implement minimal DOCSIS functionality to accommodate legacy DOCSIS or EuroDOCSIS cable modems with a single upstream and a single downstream channel. Additional functionality beyond DOCSIS needs to be added to accommodate LAMs with additional DOCSIS or EuroDOCSIS channels, wideband channels, UWB channels or channels with other physical layer technologies. There are many combinations and here are three exemplary scenarios:

[**0094**] A) A LAMC with a single DOCSIS or EuroDOCSIS channel-pair and LAMs being legacy DOCSIS or EuroDOCSIS cable modems. Upon power-up or reset, the LAMC establishes a DOCSIS or EuroDOCSIS channel-pair and register all legacy DOCSIS or EuroDOCSIS LAMs using the procedure as described in reference [3 DOCSIS]. The LAMC must implement the necessary protocols such as DHCP server, TOD server, TFTP server and a valid DOCSIS cable modem Configuration File in order to register the DOCSIS or EuroDOCSIS cable modem before operational. The LAMC in this scenario will implement a subset of the DOCSIS MAC and other CMTS functionalities.

[**0095**] B) LAMC with multiple DOCSIS or EuroDOCSIS channel-pairs and LAMs being legacy DOCSIS or EuroDOCSIS cable modems. Each legacy DOCSIS or EuroDOCSIS cable modem will initialize, range, and register on a DOCSIS or EuroDOCSIS channel-pair. The LAMC can distribute the load by moving the LAMs to different DOCSIS or EuroDOCSIS channel-pairs using DCC (dynamic channel change) protocol. In this scenario, the LAMC will implement a subset of the DOCSIS MAC and other CMTS functionalities. A typical LAMC startup sequence is as follows:

[**0096**] 1) Establishes at least one DOCSIS or EuroDOCSIS downstream-upstream channel-pair by broadcasting in each of the downstream channels, a periodic SYNC MAC message, and a periodic UCD and a periodic MAP MAC messages for each of the upstream channels;

[**0097**] 2) Performs initializing ranging and registering the DOCSIS or EuroDOCSIS cable modems and the multi-channel LAMs using one of the channel-pairs;

[**0098**] 3) Distributes the downstream and upstream bandwidth to the local area modems by moving the cable modems to one of the specific DOCSIS or EuroDOCSIS channel-pairs using DCC MAC messages;

[**0099**] 4) Arbitrates upstream multiple access transmissions according to DOCSIS MAC protocol; and

[**0100**] 5) Schedule upstream and downstream transmissions according to the DOCSIS MAC protocol.

[**0101**] C) LAMC and LAMs supporting multiple channels of DOCSIS or EuroDOCSIS and non-DOCSIS physical layer types. The channels can be a mix of DOCSIS or EuroDOCSIS channels, wideband channels, ultra-wideband channels, OFCM channels, and, but not limited to, SDM channels. The preferred embodiment is to use the fsMAC technology described in reference [9 Eng]. A typical startup sequence from the LAMC perspective is as follows:

[0102] (1) Establishes time synchronization among a LAMC and LAMs by broadcasting in a downstream-control-and-payload channel (DCPC), a periodic SYNC (time-stamp synchronization) MAC Message;

[0103] (2) Establishes a fsMAC (full-service media-access-control) domain by broadcasting a periodic MDCD (fsMAC Domain Channels Descriptor) MAC message in the DCPC, thereby identifying the fsMAC domain, downstream channels and upstream channels, with the channel profiles and burst profiles supported by the LAMC;

[0104] (3) Initializes the upstream receivers using the channel profiles and burst parameters in step (2);

[0105] (4) Calibrates (including ranging, adjusting power, frequency, timing and equalization coefficients) upstream transmitters of the LAMs using MMAP (multi-channel MAP), CEQ (calibration Request), and CRSP (Calibration response) MAC messages;

[0106] (5) Initializes the downstream receivers in the LAMs by the channel profiles;

[0107] (6) Establishes one of the upstream channel as upstream-control-channel (UCC), designated by an indication in the MDCD message for communicating MAC messages to the LAMC;

[0108] (7) Registers the LAMs which now become operational;

[0109] (8) Schedules packet transmissions in one or more downstream channels simultaneously or sequentially;

[0110] (9) Arbitrates upstream bandwidth requests from one or more LAMs using bandwidth request (BREQ) MAC message; and schedules bandwidth grants using the MMAP messages; each of the grants including an amount of bandwidth granted to the LAM to transmit at a specific time, at one of the upstream channels, and with one of the burst profiles.

[0111] If there is a mix of legacy DOCSIS or EuroDOCSIS cable modems and multi-channel LAMs, a designated DOCSIS or EuroDOCSIS channel-pair can be used to register all modems and served as DCPC and UCC channel-pair for MAC messages.

[0112] The initialization can be simplified if legacy DOCSIS or EuroDOCSIS CM supported is not needed. A simpler layer-2 forwarding model can be used in the home backbone network. Provisioning servers such as DHCP, TFTP, TOD, and configuration files may be replaced by a simplified provisioning method.

[0113] Alternatively, other point-to-multi-points MAC protocols similar to DOCSIS or fsMAC can be modified to use in the broadband local area network. Examples are: IEEE 802.16 fixed wireless protocol and IEEE 802.3ah Multi-Point Control Protocol.

[0114] Although the invention has been disclosed in terms of the preferred and alternative embodiments disclosed herein, those skilled in the art will appreciate possible alternative embodiments and other modifications to the teachings disclosed herein which do not depart from the spirit and scope of the invention. All such alternative embodiments and other modifications are intended to be included with the scope of the claims append hereto.

What is claimed is:

1. A point-to-multipoint, broadband shared-media local area network (LAN) comprising:

a central controller and one or more end-stations;

wherein said controller transmitting packets to said end-stations in one or more downstream channels, and receiving packets from said end-stations in one or more upstream channels;

wherein a media access control (MAC) function in said controller arbitrates upstream multiple-access packet transmissions, and schedules packet transmissions from upstream and to downstream channels with quality-of-service for voice, video and data communications in said network.

2. The controller of claim 1 wherein said controller has a network interface to a residential gateway, which in turn coupled to a broadband modem.

3. The broadband LAN of claim 1 where said shared medium is one of the following types: coaxial cable, hybrid-fiber coaxial cable, passive optical fiber, or wireless.

4. The broadband LAN of claim 1 where said central controller is a multi-channel local area modem controller, and said end-stations are multi-channel local area DOCSIS/EuroDOCSIS cable modems.

5. The broadband LAN of claim 1 where said central controller is a DOCSIS/EuroDOCSIS-compatible local area modem controller, and said end-stations are local area DOCSIS/EuroDOCSIS cable modems.

6. The broadband LAN of claim 1 where said MAC is one of the following types: DOCSIS MAC, EPON MAC, IEEE 802.16 MAC or full-service MAC (fsMAC).

7. The broadband LAN of claim 1 where each of said upstream or downstream channels is one of the following physical layer type: DOCSIS or EuroDOCSIS upstream or downstream channel, IEEE 802.16 upstream or downstream channel, wideband upstream or downstream channel, ultra-wideband upstream or downstream channel, OFDM channel, or SDM channel.

8. The channels of claim 7 wherein each of said channels occupies a known bandwidth.

9. A method for sharing the radio-frequency spectrum of Cable TV channels in a broadband shared coaxial local area network (LAN) comprising the steps of:

isolating upstream spectrum used for wide-area cable modem service by a high-pass filter;

identifying one or more downstream Cable TV channels not currently in used;

removing said cable TV channel by one or more tunable notch filters;

inserting LAN-generated downstream channels for said network into said channels removed by said notch filters, by a combiner;

merging LAN-generated upstream channels with said LAN-generated downstream channels by a diplexer, and then being distributed to the broadband LAN coaxial cables by a splitter;

wherein said broadband LAN channels operating simultaneously with remaining cable TV programming channels.

10. A circuit for enabling a local area modem controller (LAMC) to communicate with a local area modem (LAM) in a broadband point-to-multipoint shared media local area network (LAN) comprising:

a media-access-control (MAC) controller coupled to one or more downstream transmitters, and one or more upstream transmitters;

wherein downstream channels from said transmitters being combined with cable TV programming channels and then merging with upstream channels in a diplexer, and then being distributed to a coaxial segment via a splitter to said LAM.

11. The circuit of claim 10 wherein at least an interface to an external network being coupled to said MAC controller.

12. A circuit for enabling a local area modem (LAM) to communicate with a local area modem controller(LAMC) in a broadband point-to-multipoint shared media local area network (LAN) comprising:

a media-access-control (MAC) controller coupled to one or more downstream transmitters, and one or more upstream transmitters, and a gateway function;

wherein said receivers and said transmitters coupled to a diplexer, which being coupled to said coaxial cable of said broadband LAN network.

13. The circuit of claim 12 wherein said gateway function is coupled to one or more network functions.

14. The circuit of claim 12 wherein said gateway function is coupled to one or more customer premises equipment devices.

15. A method for a local area modem controller (LAMC) in a coaxial broadband point-to-multipoint shared media local area network (LAN) to communicate with cable modems and LAMs (local area modems) with multiple DOCSIS or EuroDOCSIS channels comprising the steps of:

1) establishing at least one DOCSIS or EuroDOCSIS downstream-upstream channel-pair by broadcasting in each of said downstream channel, periodic SYNC MAC messages; and broadcasting in each of said downstream channel, a periodic UCD and a periodic MAP MAC messages for each of said upstream channels;

2) initializing, ranging and registering said DOCSIS or EuroDOCSIS cable modems and said multi-channel LAMs using one of said channel-pairs;

3) distributing the downstream and upstream bandwidth to said local area modems by moving said cable modems to one of said specific DOCSIS or EuroDOCSIS channel-pairs using DCC MAC messages;

4) arbitrating upstream multiple access transmissions according to a DOCSIS MAC function; and

5) scheduling upstream and downstream transmissions according to said DOCSIS MAC;

thereby providing the capacity and quality-of-service for packet streams in said LAN.

16. The method of claim 15 wherein said cable modems are DOCSIS or EuroDOCSIS cable modems.

17. A method for a local area modem controller (LAMC) in a broadband point-to-multipoint shared media local area network (LAN) to communicate simultaneously with local area DOCSIS or EuroDOCSIS cable modems and multi-channel LAMs (local area modems) comprising the steps of:

1) establishing time synchronization among a LAMC and LAMs by broadcasting in a downstream-control-and-payload channel (DCPC), a periodic SYNC (time-stamp synchronization) MAC Message;

2) establishing a fsMAC (full-service media-access-control) domain by broadcasting a periodic MDCD (fsMAC Domain Channels Descriptor) MAC message in said DCPC, thereby identifying said fsMAC domain, downstream channels and upstream channels, with channel profiles and burst profiles supported by said LAMC;

3) initializing said upstream receivers using said channel profiles and burst parameters in step (2);

4) calibrating upstream transmitters of said LAMs using MMAP (multi-channel MAP), CREQ (calibration Request), and CRSP (Calibration response) MAC messages;

5) initializing said downstream receivers in said LAMs by said channel profiles;

6) establishing one of said upstream channels as upstream-control-channel (UCC), designated by an indication in said MDCD message, for communicating said MAC messages to said LAMC;

7) registering said LAMs and becoming operational;

8) scheduling packet transmissions in one or more downstream channels simultaneously or sequentially;

9) arbitrating upstream bandwidth requests from one or more said LAMs using bandwidth request (BREQ) MAC message; and scheduling bandwidth grants using said MMAP messages; each of said grants including an amount of bandwidth granted to said LAM to transmit at a specific time, at one of said upstream channels, and with one of said burst profiles.

18. The method of claim 17 wherein said network medium is coaxial cable.

* * * * *