US 20060083335A1

(19) United States

(12) Patent Application Publication

(10) Pub. No.: US 2006/0083335 A1

(43) Pub. Date: Apr. 20, 2006

Seendripu et al.

(54) RECEIVER ARCHITECTURE WITH DIGITALLY GENERATED INTERMEDIATE FREQUENCY

(75) Inventors: **Kishore Seendripu**, Carlsbad, CA (US); **Raymond Montemayor**, Encinitas, CA (US); **Sheng Ye**, Carlsbad, CA (US); **Glenn Chang**, Carlsbad, CA (US); **Curtis Ling**, San Diego, CA (US)

Correspondence Address:
TOWNSEND AND TOWNSEND AND CREW, LLP
TWO EMBARCADERO CENTER
EIGHTH FLOOR
SAN FRANCISCO, CA 94111-3834 (US)

(73) Assignee: **MaxLinear, Inc.**, Carlsbad, CA (US)

(21) Appl. No.: **11/248,657**

(22) Filed: **Oct. 12, 2005**

Related U.S. Application Data

(60) Provisional application No. 60/618,240, filed on Oct. 12, 2004.

Publication Classification

(51) **Int. Cl.**
H04L 27/22 (2006.01)

(52) **U.S. Cl.** **375/332**

(57) **ABSTRACT**

A receiver can be configured to include an RF front end that is configured to downconvert a received signal to a baseband signal or a low Intermediate Frequency (IF) signal. The receiver can downconvert the desired signal from an RF frequency in the presence of numerous interference sources to a baseband or low IF signal for filtering and channel selection. The filtered baseband or low IF signal can be converted to a digital representation. The digital representation of the signal can be upconverted in the digital domain to a programmable IF frequency. The digital IF signal can be converted to an analog IF signal that can be processed by legacy hardware.

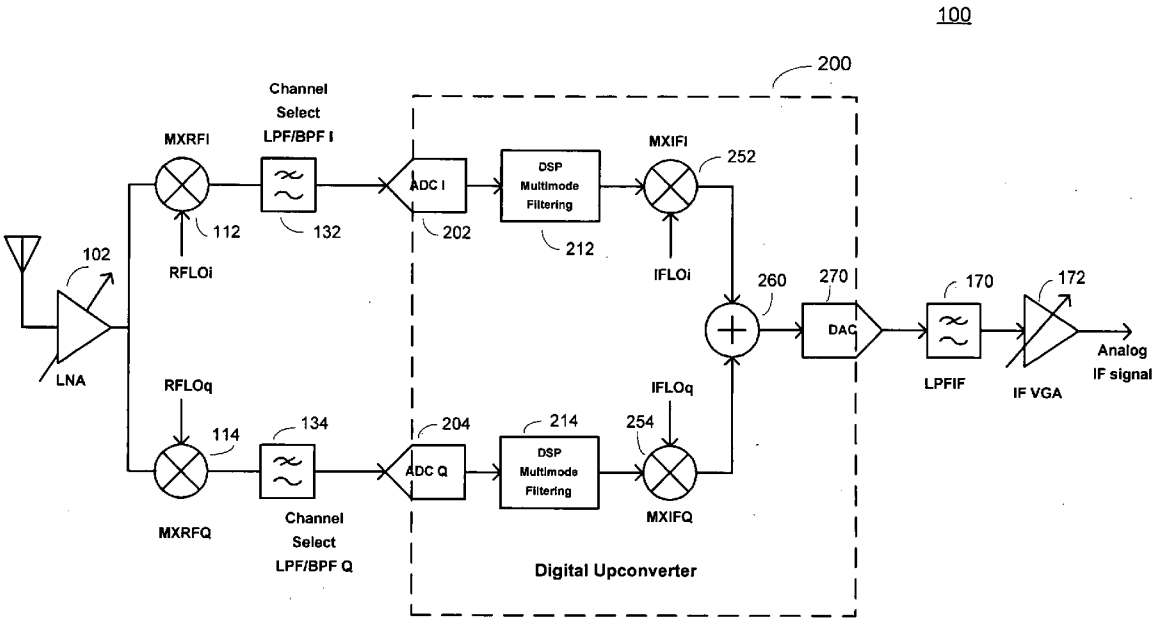

Comcast, Ex. 1238

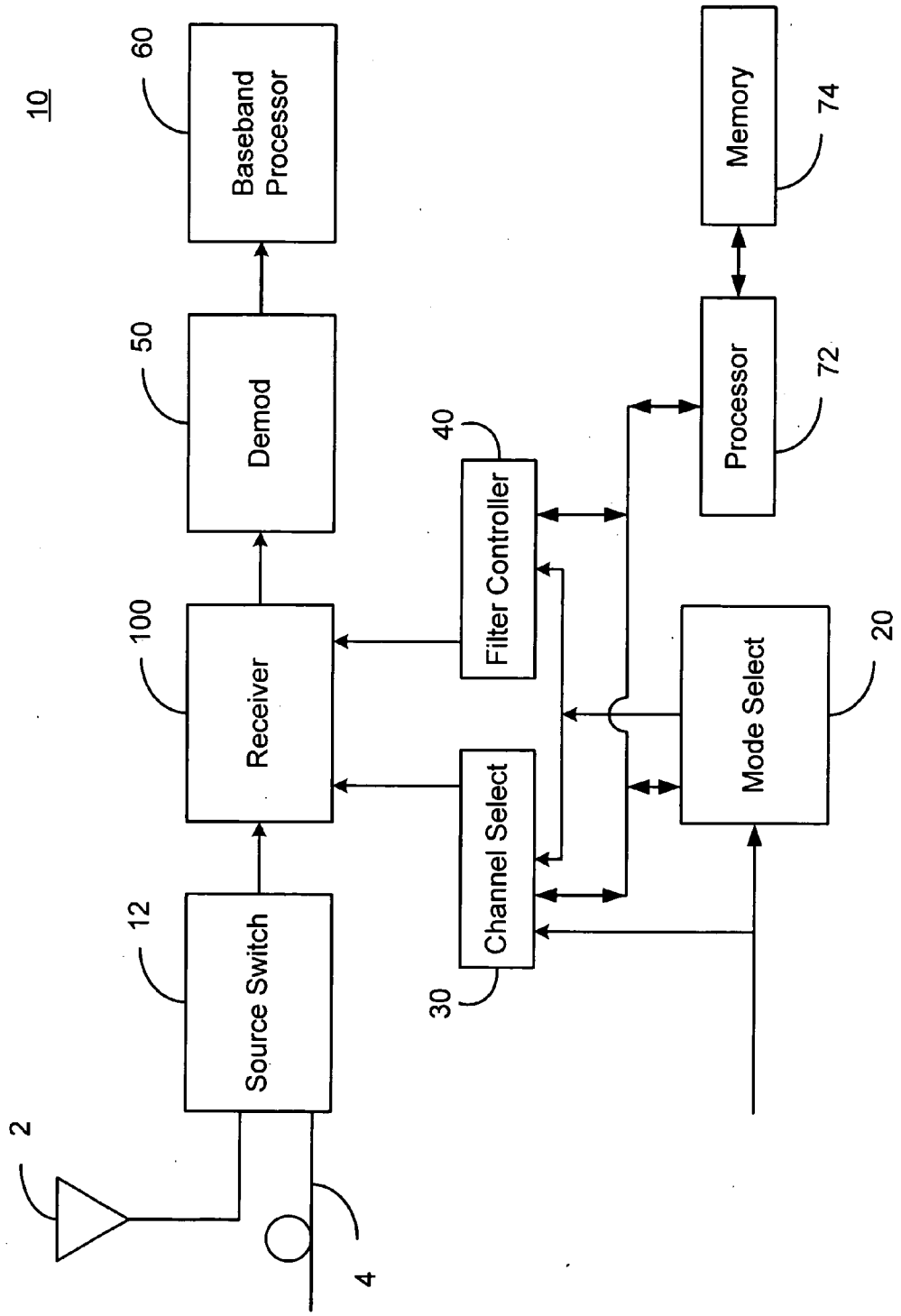
10
2
4
12
Source Switch
100
Receiver
50
Demod
60
Baseband Processor
30
Channel Select
40
Filter Controller
20
Mode Select
72
Processor
74
Memory

FIG. 1

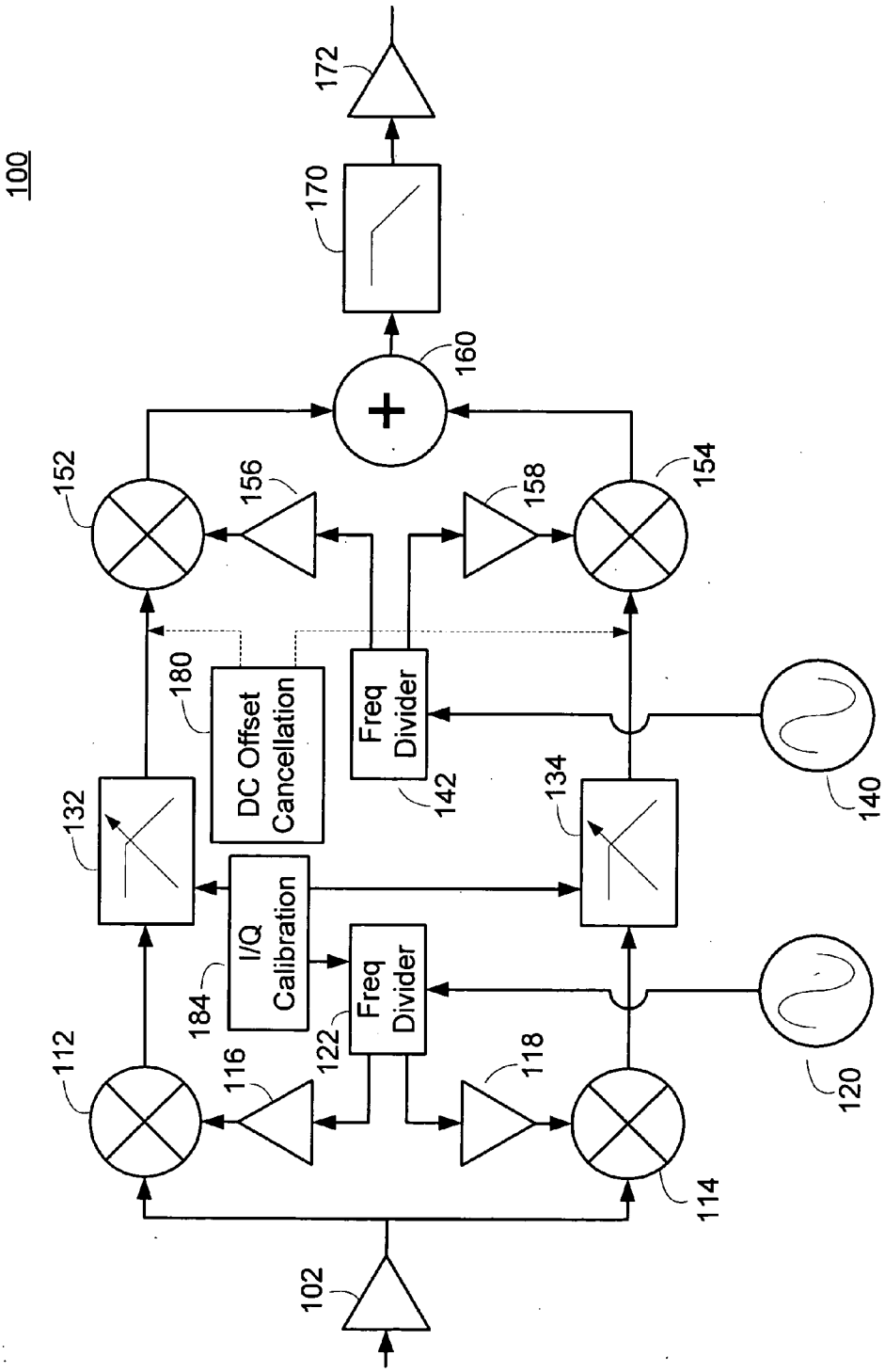
100
172
170
160
152
156
158
154
180
DC Offset Cancellation
Freq Divider
142
132
134
140
I/Q Calibration
184
Freq Divider
122
112
116
118
114
120
102

FIG. 2

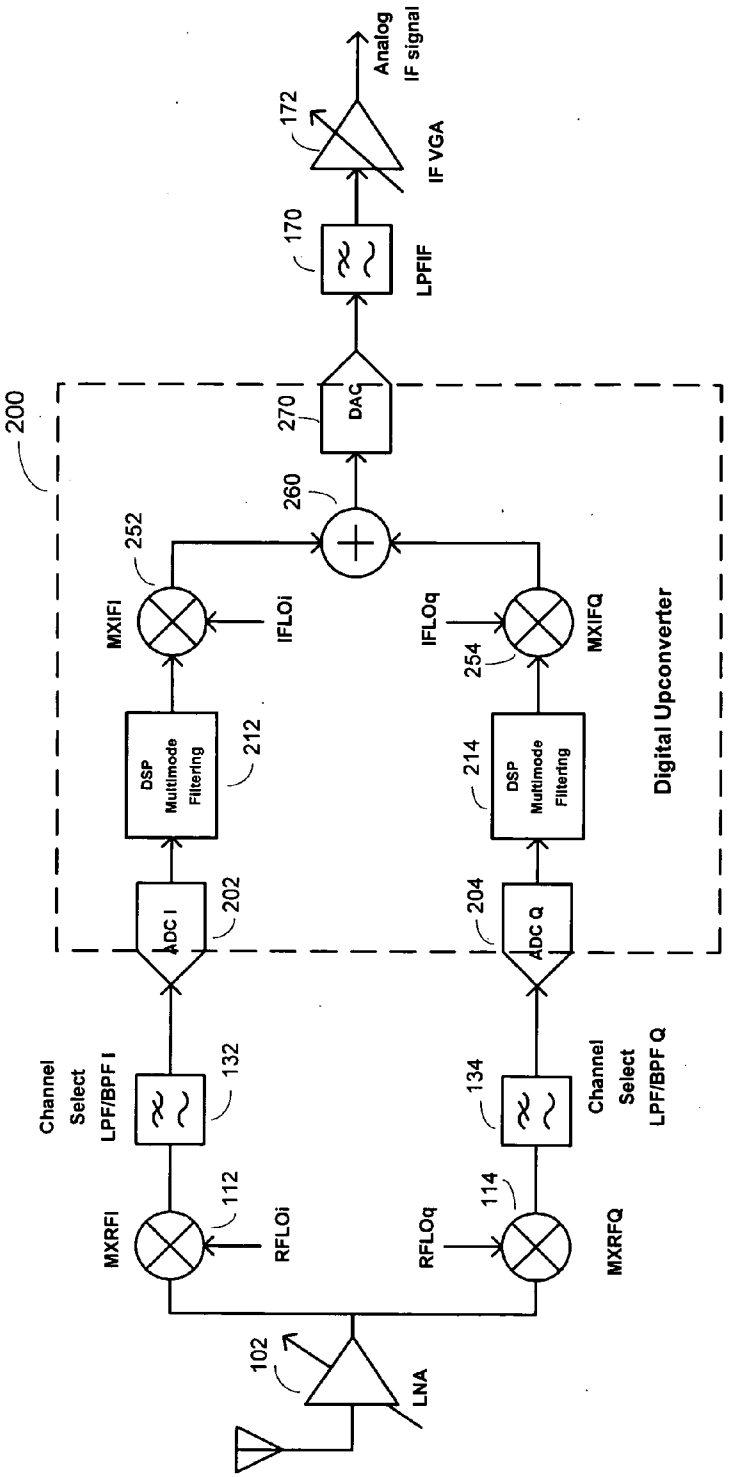
100
200
Analog
IF signal
172
IF VGA
170
LPFIF
270
DAC
260
252
MXIFI
IFLOi
IFLOq
254
MXIFQ
Digital Upconverter
212
DSP
Multimode
Filtering
214
DSP
Multimode
Filtering
202
ADC I
204
ADC Q
Channel
Select
LPF/BPF I
132
134
Channel
Select
LPF/BPF Q
MXRFI
112
RFLOi
RFLOq
114
MXRFQ
102
LNA

FIG. 3

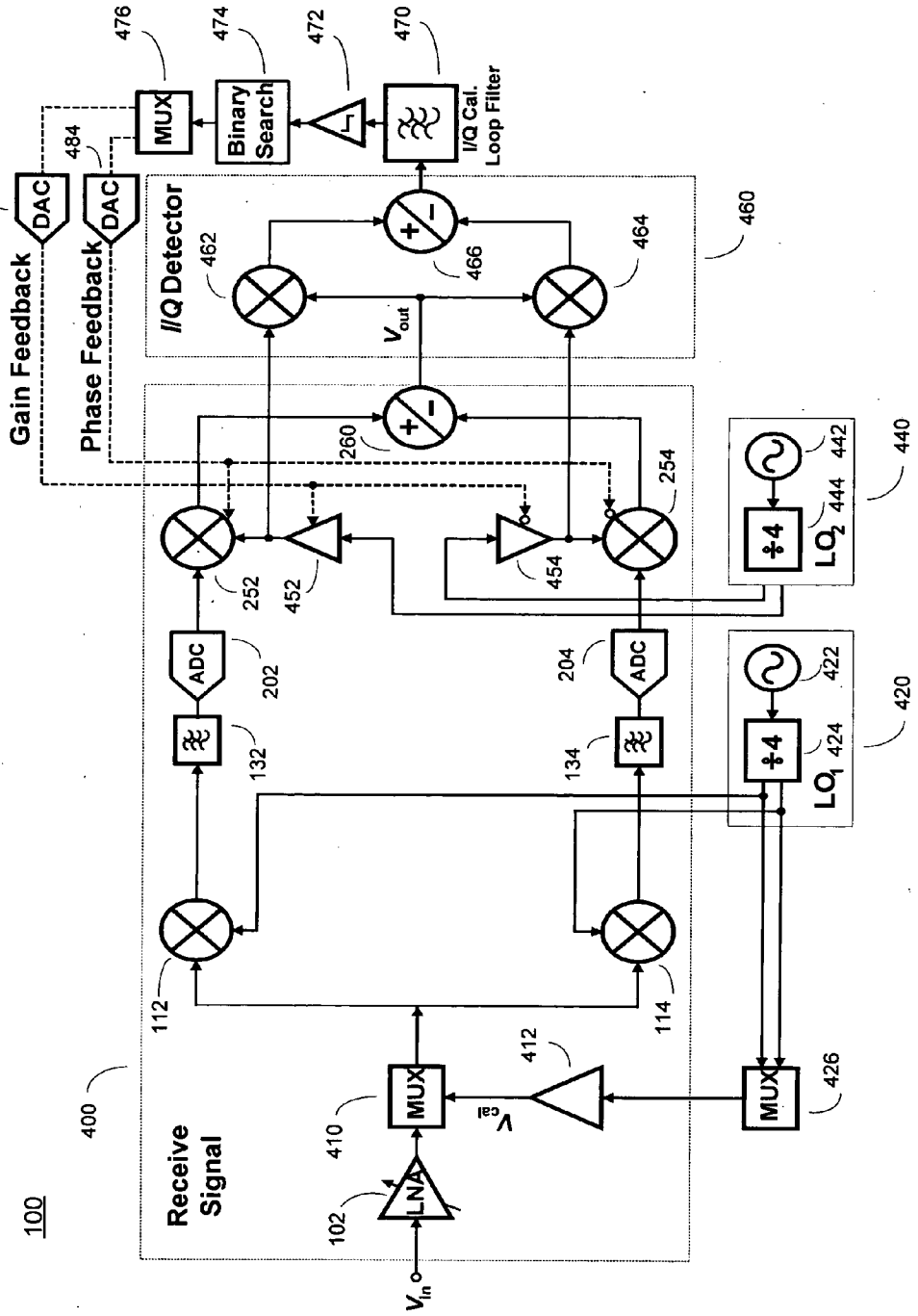
100
Receive Signal
400
Gain Feedback
Phase Feedback
482
484
DAC
DAC
MUX
476
Binary Search
474
472
I/Q Cal. Loop Filter
470
I/Q Detector
460
462
464
466
V_{out}
260
254
252
452
454
ADC
202
204
132
134
112
114
412
V_{cal}
410
MUX
LNA
102
V_{in}
MUX
426
LO_1
420
422
424
÷4
LO_2
440
442
444
÷4

FIG. 4

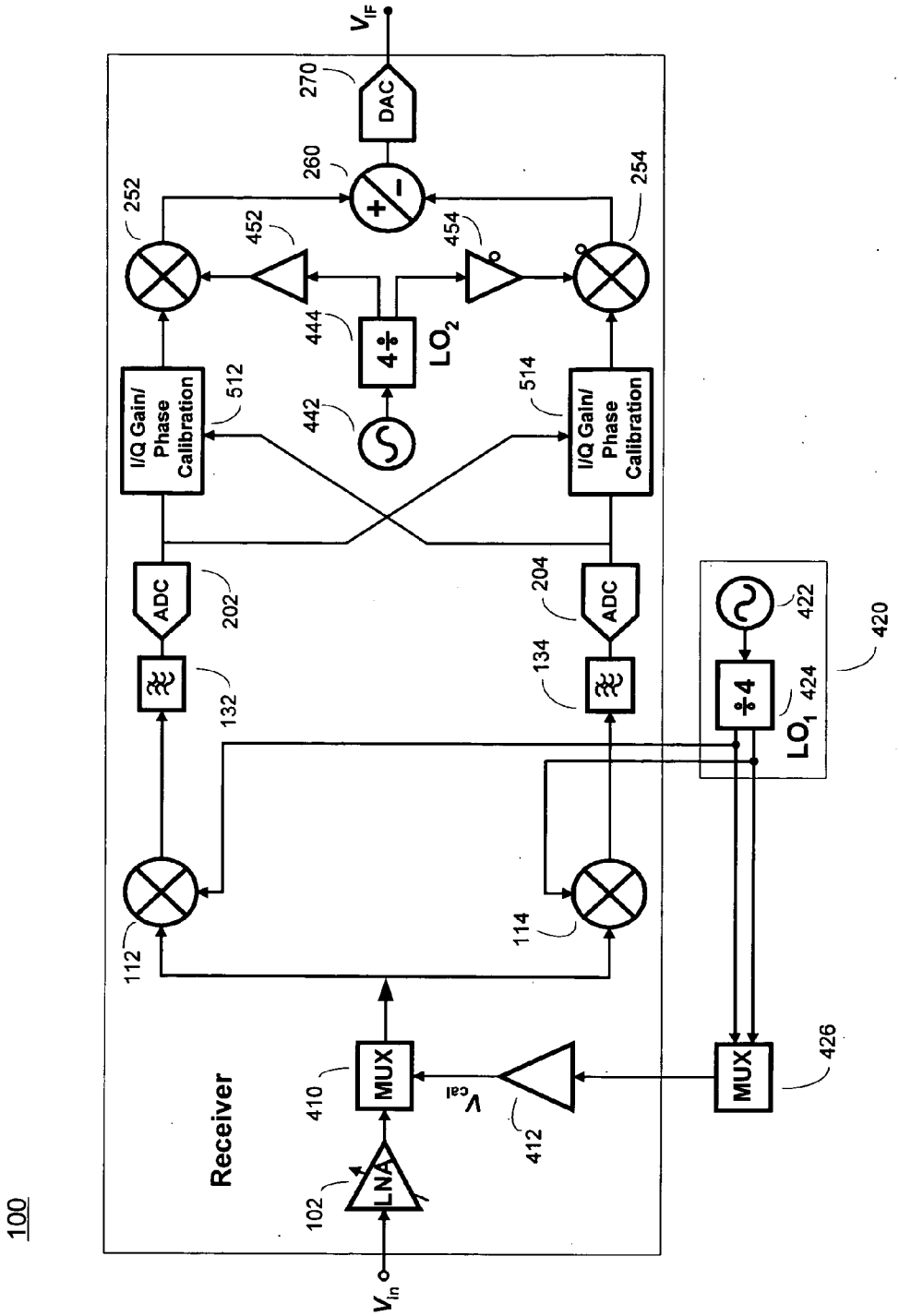
100
Receiver
V_{in}
LNA
102
MUX
410
V_{cal}
412
112
114
132
134
ADC
202
204
ADC
I/Q Gain/ Phase Calibration
512
I/Q Gain/ Phase Calibration
514
442
÷4
444
LO_2
452
454
252
254
260
270
DAC
V_{IF}
÷4
424
LO_1
422
420
MUX
426

FIG. 5

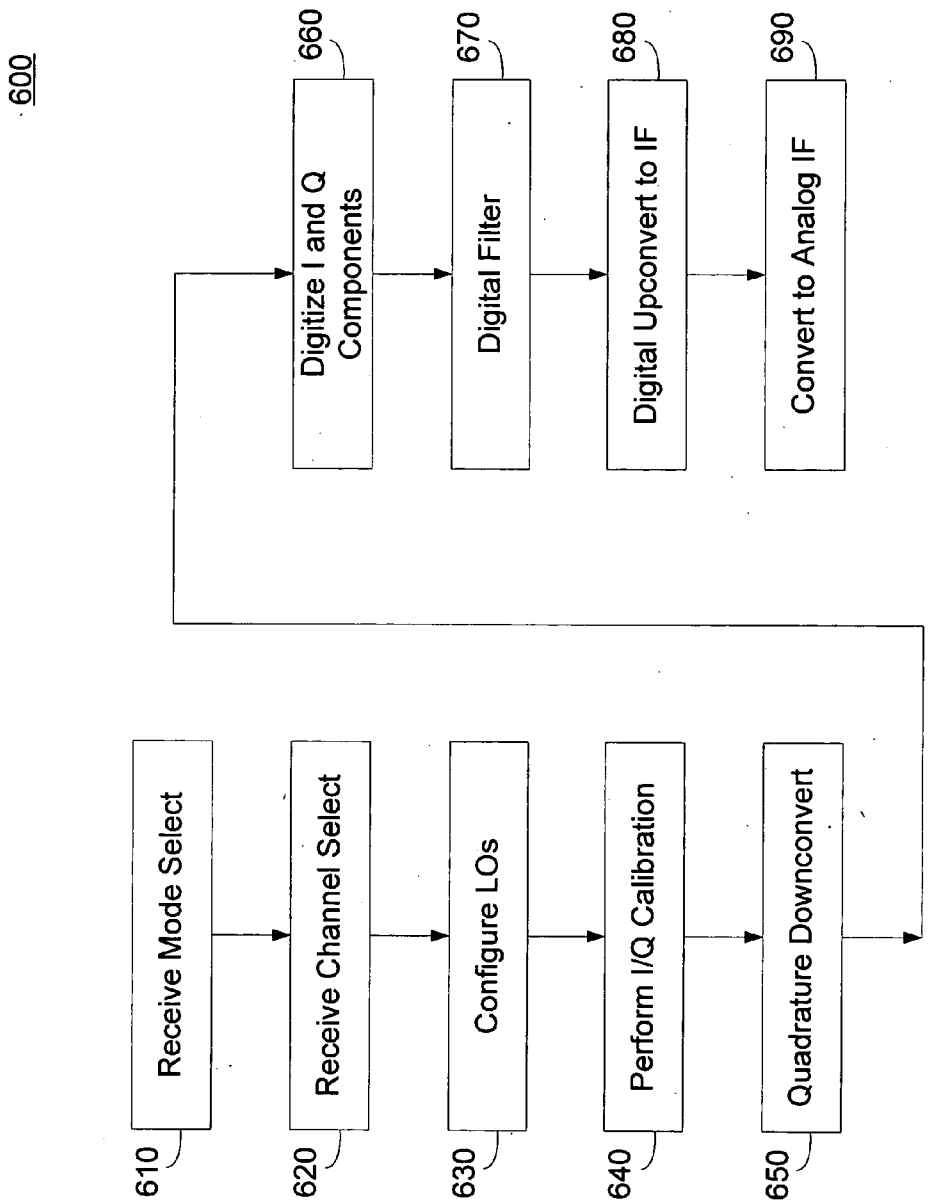
600
610
Receive Mode Select
620
Receive Channel Select
630
Configure LOs
640
Perform I/Q Calibration
650
Quadrature Downconvert
660
Digitize I and Q Components
670
Digital Filter
680
Digital Upconvert to IF
690
Convert to Analog IF

FIG. 6

RECEIVER ARCHITECTURE WITH DIGITALLY GENERATED INTERMEDIATE FREQUENCY

CROSS-REFERENCES TO RELATED APPLICATIONS

[0001] This application claims the benefit of U.S. Provisional Application No. 60/618,240, filed Oct. 12, 2004, entitled A RECEIVER ARCHITECTURE WITH DIGITALLY GENERATED INTERMEDIATE FREQUENCY; which is hereby incorporated herein by reference in its entirety.

BACKGROUND

[0002] The disclosure relates to electronic signal processing. More particularly, the disclosure relates to an RF receiver and receiver architecture.

[0003] In a typical frequency division multiplex communication system, multiple transmissions can simultaneously occupy a predefined operating band. The signals within the operating band can operate according to a predetermined communication standard, and thus, can have an energy within a predictable dynamic range. The communication standard can also specify a frequency spacing between adjacent channels, and the channel bandwidth. The communication standard can also specify signal parameters, such as modulation type, information rates, out of channel performance, as well as other signal parameters.

[0004] Additionally, there can be numerous signal sources operating outside of the operating band. Unlike the signals within the operating band, the out of band signals are typically not regulated by the communication standard regulating the in band signal performance. As a result, out of band signals may have substantially greater energy relative to the in-band signals, and can operate according to different signal parameters, including modulation type, out of band performance, and other parameters.

[0005] In order to tune to a desired channel, a receiver needs to substantially eliminate the effects of undesired channels, including those known interferers occurring within known operating bands as well as unanticipated interferers.

[0006] Many receiver implementations have been developed to support the various communication standards. The trend of increasing device complexity and performance while simultaneously reducing the physical size of electronic devices imposes tremendous constraints on ongoing development.

[0007] For example, the size of cellular and cordless telephones continues to shrink while simultaneously improving the quality of the device and adding additional functionality to the device. Similarly, radios and televisions are constantly being redesigned to provide improved features and operating modes while simultaneously decreasing physical size. Although the screen size available in television receivers continues to grow, the advancement of technologies that enable flat screens and short depths greatly reduce the volume available for electronics.

[0008] It is desirable to increase the ability of a receiver to operate in multiple modes or frequency bands without compromising received signal quality. Additionally, it is desirable for a receiver implementation to minimize size, cost, and power consumption over implementations presently available.

BRIEF SUMMARY

[0009] A receiver can be configured to include an RF front end that is configured to downconvert a received signal to a baseband signal or a low Intermediate Frequency (IF) signal. The receiver can downconvert the desired signal from an RF frequency in the presence of numerous interference sources to a baseband or low IF signal for filtering and channel selection. The filtered baseband or low IF signal can be converted to a digital representation. The digital representation of the signal can be upconverted in the digital domain to a programmable IF frequency. The digital IF signal can be converted to an analog IF signal that can be processed by legacy hardware.

[0010] The disclosure includes a receiver that includes a downconverter configured to downconvert an input signal to a signal in a first frequency band, an analog to digital converter (ADC) coupled to the downconverter and configured to digitize the signal in the first frequency band to produce a digital representation of the signal in the first frequency band, and a digital upconverter configured to upconvert the digital representation of the signal in the first frequency band to a digital representation of the signal in a second frequency band.

[0011] The disclosure includes a receiver that includes a first frequency converter configured to downconvert a received signal to an in-phase baseband signal component, a second frequency converter configured to downconvert the received signal to a quadrature baseband signal component, a first analog filter coupled to the first frequency converter and configured to perform at least partial channel selection on the in-phase baseband signal component, a second analog filter coupled to the second frequency converter and configured to perform at least partial channel selection on the quadrature baseband signal component, a first Analog to Digital Converter (ADC) coupled to the first analog filter and configured to convert the in-phase baseband signal component to a digital in-phase baseband signal component, a second ADC coupled to the second analog filter and configured to convert the quadrature baseband signal component to a digital quadrature baseband signal component, a first digital filter coupled to the first ADC and configured to digitally filter the digital in-phase baseband signal component to generate a digitally filtered in-phase baseband signal component, a second digital filter coupled to the second ADC and configured to digitally filter the digital quadrature baseband signal component to generate a digitally filtered quadrature baseband signal component, a first digital upconverter configured to digitally upconvert the digitally filtered in-phase baseband signal component to an in-phase Intermediate Frequency (IF) signal component at a desired IF, a second digital upconverter configured to digitally upconvert the digitally filtered quadrature baseband signal component to a quadrature IF signal component at the desired IF, and a digital signal combiner configured to combine the in-phase IF signal component with the quadrature IF signal component.

[0012] The disclosure includes a method of receiving a signal that includes frequency converting an input signal to

an intermediate signal in a first frequency band, digitizing the intermediate signal, and digitally converting the intermediate signal to a second frequency band.

[0013] The disclosure includes a method of calibrating a quadrature receiver. The method includes injecting a calibration tone to a signal path of a quadrature receiver, detecting an amplitude and phase imbalance of the quadrature receiver, adjusting a gain of at least one of an in-phase and a quadrature signal path based on the amplitude imbalance, and adjusting a phase of at least one of the in-phase and quadrature signal paths based on the phase imbalance.

[0014] The disclosure includes a quadrature receiver calibration apparatus, that includes a tone generator configured to generate a calibration tone, a coupler configured to couple the calibration tone to a signal path of the quadrature receiver, a detector configured to detect an in-phase and quadrature signal component when the calibration tone is coupled to the signal path, a gain feedback module configured to adjust a gain of at least one of an in-phase signal path and a quadrature signal path, and a phase feedback module configured to adjust a phase of at least one of the in-phase signal path and the quadrature signal path.

BRIEF DESCRIPTION OF THE DRAWINGS

[0015] The features, objects, and advantages of embodiments of the disclosure will become more apparent from the detailed description set forth below when taken in conjunction with the drawings, in which like elements bear like reference numerals.

[0016] **FIG. 1** is a simplified functional block diagram of an embodiment of a receiver in a system.

[0017] **FIG. 2** is simplified functional block diagram of an embodiment of a receiver.

[0018] **FIG. 3** is a simplified functional block diagram of an embodiment of a receiver with digital frequency conversion.

[0019] **FIG. 4** is a simplified functional block diagram of an embodiment of a receiver with I/Q imbalance calibration.

[0020] **FIG. 5** is a simplified functional block diagram of an embodiment of a receiver with I/Q imbalance calibration.

[0021] **FIG. 6** is a simplified flowchart of a method of receiving signals.

DETAILED DESCRIPTION OF EMBODIMENTS OF THE INVENTION

[0022] A receiver architecture is disclosed where the receiver performs conversion to zero Intermediate Frequency (IF) or low IF, performs anti-aliasing and partial channel selection filtering, converts the zero- or low-IF signal to the digital domain, performs frequency conversion by digital processing (for example mixing) to an arbitrary intermediate frequency, then converts the signal back to the analog domain with a digital-to-analog converter.

[0023] This approach provides the receiver with the following key advantages: an architecture suitable for single-chip implementation; flexible channel selection and IF filtering compatible with analog and digital standards; hybrid operation allowing a choice of either a low-IF or direct conversion; flexible choice of IF; substantially perfect conversion of In-phase and Quadrature signal paths to the IF as a result of the digital implementation; the option to perform digital baseband/low-IF processing; and an analog output that can be used by a wide variety of existing demodulator processors.

[0024] The disclosed receiver is configured to select a relatively narrow-band signal (the desired "channel") from among many undesired channels ("interferers"), filter out the interferers, and convert the desired channel to an arbitrary IF compatible with existing demodulators, while introducing minimal spurious signals, distortion and noise.

[0025] The receiver is configured to perform a low-IF or zero-IF conversion, which allows relatively low-power, efficient filtering to take place at the baseband or low IF. The downconverted signal is digitized. This takes advantage of natural anti-aliasing performed by any channel selection, while enabling digital signal processing downstream.

[0026] The receiver the performs upconversion in the digital domain to a desired IF. Digital upconversion allows the process to be performed with substantially no mismatches in the I and Q path, eliminating substantially all IF feedthrough and poor complex image rejection. The resulting digital IF signal can be converted to the analog domain and filtered using an on-chip anti-aliasing filter at the IF. This allows generating an analog IF signal compatible with a range of existing demodulators.

[0027] The receiver can be implemented by joining a zero- or low-IF receiver with a digital baseband portion, a digital IF generator, and a digital implementation of a transmitter where the output signal is converted back to the analog domain. The receiver architecture is particularly advantageous because the typical desired output intermediate frequency is at a sufficiently low frequency to allow data conversion to be performed by relatively low-power, low-complexity circuits.

[0028] **FIG. 1** is a simplified functional block diagram of an embodiment of a receiver **100** implementing digital IF generation in a system **10**. The following description describes an embodiment in which the system **10** is configured to operate as a television receiver. However, the system **10** can be any of a plurality of systems. For example, the system **10** can be a television, television receiver, set top box, or television tuner integrated within a video recorder or some other television receiver. In other embodiments, the system **10** can be a radio receiver, wireless transceiver, telephone receiver, cellular telephone, cordless telephone, or some other communication device.

[0029] The system **10** can include a source switch **12** that can be coupled to one or more signal sources. For example, a first source input can be coupled to an antenna **2** and a second source input can be coupled to a wired source, such as a cable coupled to a cable television distributor. The source switch **12** is not limited to coupling only one type of signal to the receiver **100**. For example, the source switch **12** can be coupled to a television signal source, for example, via the antenna **2**, and can be coupled to a radio source, for example, via the cable **4**.

[0030] The source switch **12** can be configured to couple any one of the signals from any signal source to the input of the receiver **100**. The receiver **100** can be, for example, configured to selectively process television signals received

from a signal source, such as analog television signals formatted according to an analog television standard, such as NTSC, PAL, SECAM, or some other analog television standard. The receiver **100** can also be configured to process digital television signals, such as digital DVB-T television signals, received from one of the signal sources.

[**0031**] The receiver **100** can receive the RF signal from the source switch **12** and can downconvert the signal to an output IF. The output IF from the receiver **100** can be coupled to a demodulator **50** and from the demodulator **50** to a baseband processor **60**. In one embodiment, the demodulator **50** can be configured to demodulate a television signal at a predetermined IF. The demodulated television signals are communicated to a baseband processor **60** that can be configured, for example, to format the signals into video and audio signals for corresponding video and audio output devices (not shown).

[**0032**] The system **10** can also include a mode selection module **20** that can be configured to receive a mode selection input from an external source (not shown) that can be, for example, a user selection or user control. The mode can correspond to an operating mode of the receiver **100**, and can be used to determine a particular operating band, channel spacing, channel bandwidths, and output IF frequency.

[**0033**] The mode select module **20** can be coupled to a channel select module **30**. The channel select module **30** can be coupled to the mode select module **20** and can be configured to generate the desired local oscillator (LO) control signals. The channel select module **30** can generate the control signals needed to tune the LO frequencies of the receiver **100** to enable reception of the desired RF signal and generation of the desired output IF. The channel select module **30** can also receive one or more input signals from an external source (not shown), such as a user interface or some other module or device that can indicate a desired channel selection.

[**0034**] The channel select module **30** can independently control the RF and IF LOs within the receiver **100**. For example, the channel select module **30** can tune the RF LO to a frequency that is based on both a mode and a desired channel. The channel select module **30** can also be configured to control the frequency of the IF LO and may be configured to control the IF LO based only on the desired mode. In other embodiments, the channel select module **30** can be configured to tune both the RF and LO frequencies for each channel.

[**0035**] The channel select module **30** can also be configured to control calibration of the receiver **100**. The calibration can include DC offset calibration and In-phase (I) and Quadrature (Q) signal balancing. For example, the channel select module **30** can control an RF switch within the receiver **100** and can initiate the DC offset calibration. In another embodiment, a calibration module within the receiver **100** can receive the channel select signals and the filter control signals and can initiate DC offset calibration, including controlling the RF switch and filter bandwidths during the duration of the DC offset calibration.

[**0036**] A filter controller **40** can also be coupled to the mode select module **20**. The filter controller **40** can be configured to provide the control signals to the receiver **100** that control one or more filter bandwidths within the receiver **100**. The filter controller **40** can be configured to set the filter bandwidths based on the channel selectivity required in the receiver **100**, which can depend on the operating mode.

[**0037**] The filter controller **40** can also be in communication with the channel select module **30**. The filter controller **40** can be configured to control the filters within the receiver **100** to predetermined bandwidths for a predetermined calibration duration following each channel change. For example, the filter controller **40** can be configured to tune the filters to a minimal bandwidth during DC offset calibration. Alternatively, a calibration module within the receiver **100** can be configured to control the filter bandwidths during the calibration duration.

[**0038**] A processor **72** and associated memory **74** can be included within the system **10** and can be configured to perform one or more functions within each of the modules. For example, the memory **74** can include one or more processor **72** usable instructions in the form of software that can, when executed by the processor **72**, perform some or all of the functions of the various modules within the system **10**.

[**0039**] **FIG. 2** is a simplified functional block diagram of an embodiment of a receiver **100** that can be implemented on one or more substrates of one or more integrated circuits (ICs). In some embodiments, it may be advantageous to integrate the entire receiver on a single IC. In other embodiments, it may be advantageous to integrate a portion of the receiver **100** in a first IC or on a first substrate and integrate the remainder of the receiver **100** on a second IC or second substrate. The first and second substrates can be implemented in a single package or may be implemented in distinct packages. For example, a signal path within the receiver **100** can be implemented on a first substrate and one or more local oscillators can be implemented on a second substrate and couple to the first substrate through one or more interconnects.

[**0040**] Although the signal interconnections shown in **FIG. 2** appear as single ended signal interconnects, it is generally understood that some or all of the interconnections can be implemented as differential connections. It may be advantageous to implement differential interconnections, for example, for the purposes of noise reduction.

[**0041**] Portions of the receiver **100** can be implemented digitally, and can be configured to operate on digital representations of the signal. The digital processing of the signals within the receiver **100**, and embodiments of receivers **100** having digital portions, are described in further detail in subsequent figures. The embodiment of **FIG. 2** does not explicitly illustrate the digital portions to allow the description to focus on the functionality of the various blocks and modules.

[**0042**] The receiver **100** can include an RF amplifier **102** that is configured to receive a signal at the input to the receiver **100** and amplify it. The RF amplifier **102** can be configured to receive a signal, for example, from an interconnect to an antenna or wired connection, such as a single ended wireline, a differential wireline, a twisted pair, a coaxial cable, a transmission line, a waveguide, an optical receiver configured to receive an optical signal over an optical fiber, and the like, or some other signal medium.

[**0043**] The RF amplifier **102** can be configured in any of several different embodiments or combination of embodi-

ments, depending on the application. In one embodiment, the RF amplifier **102** can be a Low Noise Amplifier (LNA). In another embodiment, the RF amplifier **102** can be a variable gain amplifier, and the gain of the RF amplifier can be selected by one or more control lines (not shown) to the receiver **100**. In the embodiment where the RF amplifier **102** is a variable gain amplifier, the gain of the RF amplifier **102** can be part of a gain control loop, such as an automatic gain control (AGC) loop (not shown). The RF amplifier **102** can be configured as a single amplifier stage or can include multiple amplifier stages. Where multiple amplifier stages are used, the amplifier stages can include serial, parallel, or a combination of serial and parallel amplifier configurations.

[**0044**] The output of the RF amplifier **102** can be coupled to inputs of first and second frequency conversion modules, here shown as a first mixer **112** and a second mixer **114**. The first and second mixers **112** and **114** are shown as mixers, but can be any type of frequency conversion device. For example, the first and second mixers **112** and **114** can be double balanced mixers, double-quadrature mixers, harmonic reject mixers, interferometers, or some other type of frequency conversion device. The first and second mixers **112** and **114** can be configured to generate in-phase (I) and quadrature (Q) frequency converted signal components. The first mixer **112** is described as part of the in-phase signal path and the second mixer **114** is described as part of the quadrature signal path for purposes of discussion.

[**0045**] An RF LO **120** can be configured to generate a local oscillator signal to frequency convert the received RF signal to a baseband signal or a low Intermediate Frequency (IF) signal. As used herein, the term baseband signal refers to baseband signals as well as to signals that are substantially baseband signals. A signal is substantially a baseband signal if the frequency conversion process to downconvert a signal is imperfect, for example, due to LO offset errors or differences at the transmitter or receiver and errors or differences in the RF signal relative to a specified frequency of operation. For example, an RF signal may be different from a specified operating channel due to LO frequency shifts at the transmitter or Doppler shifts. Typically, the error or difference is a fraction of the baseband signal bandwidth.

[**0046**] A low IF signal can refer to an IF frequency that is less than twice the baseband signal bandwidth. However, in other embodiments, low IF can refer to less than 1.5, 2.5, 3, 4, 5, 10, or some other multiple of the baseband signal bandwidth. Typically, a low IF signal refers to a signal that is at a frequency sufficiently low to allow processing of the signal without additional frequency conversions.

[**0047**] The receiver **100** can be configured to operate using direct conversion to baseband in some operating modes while converting to a low IF in other operating modes. For example, the receiver **100** can operate in low-IF mode for analog TV applications, and zero-IF for digital applications. Using distinct frequency conversion modes for separate operating modes may be advantageous because the receiver **100** architecture can be optimized for signal characteristics.

[**0048**] Analog television standards such as NTSC or PAL require less channel selection and image rejection in its low-pass filtering, but are much more sensitive to DC offset which typically are present in a zero-IF implementation. This makes an analog television receiver **100** more suited for a low-IF implementation, which may suffer from poorer channel selectivity, but which also substantially eliminates the DC offset problems associated with zero-IF.

[**0049**] Digital TV (e.g. DVB-T) requires greater channel selection, but is less sensitive to DC offset that may be introduced by a zero-IF architecture. This makes digital TV well-suited for a zero-IF approach, which offers better channel selectivity and no image rejection limitations, but may introduce some DC offset to the signal.

[**0050**] The frequency of the RF LO **120** can be programmable, and the frequency can be programmed based in part on the frequency of the desired signal. In a direct conversion frequency conversion, the output of the RF LO **120** can be substantially equal to the center frequency of a double side band input signal. In other embodiments, the RF LO **120** can be tuned to a frequency that is a multiple of the desired input frequency. In the embodiment of **FIG. 2**, the RF LO **120** can be tuned to a frequency that is substantially four times the frequency of the desired signal.

[**0051**] The output of the RF LO **120** can be coupled to a first phase shifter **122** that can be configured to generate at least two distinct versions of a LO signal that are in quadrature. Because inaccuracies in the quadrature LO signals can contribute to undesired signal components in the recovered signal, it is desirable to generate accurate quadrature LO signals. In one embodiment, the first phase shifter **122** can include a phase shifted signal path and a direct signal path, where the phase shifted signal path results in a signal that is substantially 90 degrees shifted relative to the signal from the direct signal path. In another embodiment, the first phase shifter **122** can include a polyphase filter that is configured to generate the two LO signals in quadrature. In the embodiment shown in **FIG. 2**, the first phase shifter can be implemented within the divide by four scaler.

[**0052**] The in-phase LO signal can be coupled to an in-phase LO buffer amplifier **116** that amplifies the in-phase LO signal and couples it to a LO input port of the first mixer **112**. Similarly, the quadrature LO signal can be coupled to a quadrature LO buffer amplifier **118** that amplifies the quadrature LO signal and couples it to a LO port of the second mixer **114**.

[**0053**] The output of the first mixer **112** can be an in-phase baseband signal that is coupled to an in-phase filter **132**. The in-phase filter **132** can be programmable filter whose bandwidth can be selected based on one or more control signals (not shown) provided to the receiver **100**. The bandwidth of the in-phase filter **132** can be selected, for example, based on a communication standard or mode that the receiver **100** is configured to support. Therefore, where the receiver **100** is configured to support multiple standards having different channel bandwidths, the bandwidth of the in-phase filter **132** can be selected based in part on the presently supported mode.

[**0054**] When the signal is a baseband signal or a low IF signal, the in-phase filter **132** can be configured as a low pass filter. Alternatively, the in-phase filter **132** can be configured as a bandpass filter if the low IF signal has sufficient bandwidth to make the use of a low pass filter undesirable.

[**0055**] The output of the in-phase filter **132** can be coupled to a third mixer **152** configured to frequency convert the in-phase signal to a desired output IF. In one embodiment,

the output of the in-phase filter **132** is a baseband signal and the third mixer is configured to upconvert the in-phase baseband signal to an output IF.

[**0056**] The third mixer **152** can be driven by a programmable LO that is generated in much the same manner that is used to generate the LO for the first and second mixers **112** and **114**. A programmable IF LO **140** can be configured to generate a signal that is substantially four times the desired output IF. The IF LO **140** can be programmable to allow the output IF to be selected based in part on the mode supported by the receiver **100**. For example, the receiver **100** can be configured to frequency convert the input signals to a predetermined IF that can depend on the manner in which the user configures the system having the receiver **100**. For example, a set top box for television signals can be configured to generate an output signal at a predetermined IF, such as 70 MHz, or at a frequency corresponding to a television channel.

[**0057**] The output of the IF LO **140** can be coupled to a second phase shifter **142** that can be implemented in a divide by four circuit. An in-phase LO output from the second phase shifter **142** can be coupled to an in-phase buffer amplifier **156** that amplifies the in-phase LO signal and couples it to the LO input of the third mixer **152**. The output of the third mixer **152** is an in-phase IF signal that is coupled to a first input of a signal combiner **160**.

[**0058**] The quadrature signal path is configured to be substantially identical to the in-phase signal path. The two signal paths are typically substantially matched to reduce undesirable signal components that can be generated due to I and Q mismatches.

[**0059**] The output of the second mixer **114** can be a baseband quadrature signal that is coupled to an input of a quadrature filter **134**. The quadrature filter **134** can be configured as a programmable low pass filter having programmable bandwidth. Typically, the configuration and bandwidths of the in-phase and quadrature filters **132** and **134** are the same such that the in-phase and quadrature signal paths remain substantially matched.

[**0060**] The output of the quadrature filter **134** can be coupled to an input of a fourth mixer **154** that is configured to upconvert the quadrature signal to the output IF. The fourth mixer **154** is driven by an LO signal that is generated by the IF LO **140**. The output of the IF LO **140** is coupled to a second phase shifter **142** that generates a quadrature LO signal. The quadrature LO signal is coupled to a quadrature buffer amplifier **158** which amplifies the quadrature LO signal and couples it to an LO input of the fourth mixer **154**. The output of the fourth mixer **154** can be a quadrature IF signal. The quadrature IF signal can be coupled to a second input of the signal combiner **160**.

[**0061**] The signal combiner **160** can be configured to combine the in-phase and quadrature IF signals. The signal combiner **160** can be, for example, a signal summer that sums the in-phase IF signal with the quadrature IF signal. In one embodiment, the signal combiner **160** sums the two signals maintaining their phases. In another embodiment, the signal combiner **160** can invert one of the phases and sum the two signals. In yet another embodiment, the signal combiner **160** can generate the sum of the two signals and can invert the output signal.

[**0062**] The output of the signal combiner **160** represents the output IF signal. The output IF signal can be coupled to an output filter **170** that can be, for example, a low pass filter or bandpass filter that is configured to remove undesired signal products from the IF output signal. The output filter **170** can be configured as a fixed bandwidth filter or can be configured as a programmable bandwidth filter, where the bandwidth is determine, in part, based on a mode of the receiver **100**.

[**0063**] The output of the output filter **170** can be coupled to an IF amplifier **172** that can be configured to amplify the output. The IF amplifier **172** can be a variable gain amplifier. The gain of the IF amplifier **172** can be controlled using one or more control inputs (not shown) on the receiver **100**. The output of the IF amplifier **172** can be the output of the receiver **100**.

[**0064**] The receiver **100** can also include a DC offset cancellation module **180** configured to substantially remove the DC component on each of the in-phase and quadrature signal paths. DC signals at the inputs to the third and fourth mixers **152** and **154** result in the generation of LO signals at the outputs of the respective third and fourth mixers **152** and **154**. Because the LO signal can represent an undesired signal, the receiver **100** can incorporate a DC offset cancellation module **180** that monitors the DC offset and compensates for it to substantially remove it from both the in-phase and quadrature signal paths prior to upconversion to the output IF.

[**0065**] The receiver **100** can also include an I/Q calibration module **184**. The receiver **100** can reduce the contribution due to undesired signals if the in-phase (I) and quadrature (Q) signal paths can be balanced. The I/Q calibration module **184** can reduce or substantially eliminate gain differences in the I and Q signal paths and can ensure that the I and Q signal paths are substantially in quadrature.

[**0066**] The I/Q calibration module **184** can be coupled to one or more gain stages in each of the I and Q signal paths. In the embodiment shown in **FIG. 2**, the I/Q calibration module **184** is coupled to the filters **132** and **134** in the I and Q signal paths. The I/Q calibration module **184** can be configured to adjust the gain through one or more of the filters in order to balance the gains of the I and Q signal paths. Additionally, the I/Q calibration module **184** can be configured to adjust the phase offset contributed by the first phase shifter **122** in order to maintain the quadrature nature of the two signal paths.

[**0067**] It may be advantageous to implement the entire receiver **100** on a single integrated circuit, such that the processes and conditions used to manufacture the in-phase and quadrature signal components are closely matched, resulting in more closely matched I and Q signal paths. Additionally, it may be advantageous to implement the components on a single IC to minimize path length distances or variations that contribute to mismatches. A single IC implementation can also result in a smaller receiver **100** package.

[**0068**] **FIG. 3** is a simplified functional block diagram of a receiver **100** implementing a digital IF generation module **200**. The receiver **100** implements some of the functionality in analog domain and other functionality in the digital domain in order to capitalize on various advantages of the

respective domains. The functional block diagram of **FIG. 3** omits some blocks for the sake of clarity. For example, the RF and IF LOs and their respective phase shifters are not illustrated, nor are the DC offset and I/Q calibration modules illustrated.

[**0069**] The RF portion of the receiver **100** embodiment of **FIG. 3** is configured similar to that shown and described in **FIG. 2**. An RF amplifier **102**, here depicted as a variable gain LNA, is configured to receive an input signal at a desired RF frequency. The input signal can be within an operating band of possible input signals and undesired channels within the operating band may appear as interference sources.

[**0070**] The output of the RF amplifier **102** is coupled to first and second mixers, **112** and **114**, configured to downconvert I and Q signal components, respectively, to I and Q baseband or low IF signals. The output of the first mixer **112** represents the I baseband or low IF signal. The signal is coupled to a the in-phase filter **132**. The in-phase filter **132** can be configured to provide at least partial channel selection. The in-phase filter **132** can be configured to provide at least a portion of the desired channel selectivity. A remaining portion of channel selection can be implemented in the digital domain, as will be described below. The in-phase filter **132** can also operate as an anti-aliasing filter to substantially suppress aliased components after digitizing the signal.

[**0071**] Similarly, the output of the second mixer **114** represents the quadrature signal. The quadrature signal is coupled to the quadrature filter **134** for partial channel selection and anti-alias filtering. The shape of the in-phase and quadrature filters **132** and **134** can be determined, in part, by the amount of channel selection performed by subsequent digital filters. Additionally, the shape of the anti-aliasing filter response can be determined in part by the sampling rate of the subsequent digitizing operation.

[**0072**] The output of the in-phase and quadrature filters, **132** and **134**, is coupled to a digital IF generator **200** configured to digitally filter and upconvert the I and Q signals to a selectable IF. The digital IF generator **200** can also be configured to convert the digital IF signal to an analog signal representation. The digital IF generator **200** can thus be configured to accept analog I and Q signal inputs, digitally filter and upconvert the signals and combine them into a composite digital IF signal, and convert the digital IF signal to an analog IF signal. A module that interfaces with the digital IF generator **200** can be completely unaware of the digital processing performed by the digital IF generator **200**.

[**0073**] The digital IF generator **200** includes a first Analog to Digital Converter (ADC) **202** configured to receive the downconverted in-phase signal and convert it to a digital representation. The digitized in-phase signal can be coupled to a first digital filter **212**. The first digital filter **212** can be configured to perform channel selection on the digitized in-phase signal. In one embodiment, the first digital filter **212** can be configured to provide the desired channel selectivity response. In another embodiment, the first digital filter **212** can be configured to have a frequency response that operates in conjunction with the in-phase filter **132** to produce the desired channel selectivity.

[**0074**] The output of the first digital filter **212** can be coupled to a first digital frequency converter **252** configured to frequency convert the filtered in-phase digital signal to an in-phase digital IF. The output of the first digital frequency converter **252** is coupled to a first input of a digital signal combiner **260**.

[**0075**] The digital IF generator **200** includes a quadrature signal path that is complementary to the in-phase signal path. A second ADC **204** is configured to accept the quadrature signal from the quadrature filter **134**. The second ADC **204** converts the quadrature signal to a digital representation and couples the digital quadrature signal to a second digital filter **214**.

[**0076**] The second digital filter **214** filters the digital quadrature signal to provide the desired channel selectivity. The filtered digital quadrature signal is coupled to a second digital frequency converter **254** configured to frequency convert the filtered quadrature digital signal to a quadrature digital IF signal. The output of the second digital frequency converter **254** is coupled to a second input of the digital signal combiner **260**.

[**0077**] The first and second digital filters **212** and **214** can be configured with fixed bandwidths or can be configured to have controllable bandwidths and frequency responses. IN one embodiment, the bandwidths and frequency responses of the first and second digital filters **212** and **214** are substantially the same. In another embodiment, the first and second digital filters **212** and **214** can have distinct bandwidths and frequency responses. In some embodiments, the bandwidth and frequency response can be based in part on an operating mode of the receiver **100**. For example, the first and second digital filters **212** and **214** can be configured with a first response if the receiver **100** is configured to process analog NTSC video signals. The first and second digital filters **212** and **214** can be configured with a second response if the receiver **100** is configured to process DVB-T signals. The filter responses can be selectively programmable to any of a plurality of predetermined frequency responses.

[**0078**] In one embodiment, each of the first and second digital filter **212** and **214** can be implemented as a digital signal processor (DSP) configured to provide a filter response based on one or more filter coefficients stored in a memory (not shown). The first and second digital filters **212** and **214** can be configured to store filter coefficients for a plurality of filter responses, and the DSP can be configured to select a coefficient set based, for example, on a mode or channel configuration.

[**0079**] The first and second digital frequency converters, **252** and **254**, can be configured to perform frequency conversion according to any one of various frequency conversion techniques. For example, the first and second digital frequency converters, **252** and **254**, can be configured as mixers, multipliers, rotators, or some other frequency converter.

[**0080**] The digital signal combiner **260** can be configured as a signal summer. Additionally, the digital signal combiner **260** can be configured to invert one or both of the digital IF signal components. The digital signal combiner **260** couples the combined, composite digital IF signal to a digital to analog converter (DAC) **270** configured to convert the digital IF signal to an analog IF signal. The analog IF signal represents the output of the digital IF generator **200**.

[**0081**] The analog IF signal is coupled to an output filter **170** and an IF amplifier **172**. The output filter **170** can be

configured to remove any undesired frequency conversion products and any undesired signal components generated by the DAC **270**.

[**0082**] **FIG. 4** is a simplified functional block diagram of an embodiment of a receiver **100** with digital IF generation and I/Q imbalance calibration. The receiver **100** includes a receive signal portion **400** that is configured to receive an input signal and convert it to a digital IF. An I/Q detector **460** is coupled to the output of the receive signal portion **400** and is configured to determine the relative phase and amplitude of the I and Q signal components during a calibration period. One or more feedback loops can operate to correct the amplitude and phase balance of the I and Q signal paths in order to compensate for any path mismatches or imbalances.

[**0083**] The receiver **100** is configured to have a signal processing mode and a calibration mode. The operation of the receiver **100** during signal processing mode is essentially the same as the receiver embodiment shown in **FIG. 3**.

[**0084**] An input RF signal is coupled to the RF amplifier **102** at the input of the receive signal portion **400** of the receiver **100**. The output of the RF amplifier **102** is coupled to a first multiplexer **410** that is configured to select the RF amplifier **102** output during signal processing mode. The first multiplexer **410** couples the RF amplifier **102** output to first and second mixers **112** and **114** to frequency convert the signal to I and Q baseband or low IF signal components.

[**0085**] An RF LO **420** having a LO generator **422** and phase shifter **424** is configured to drive the first and second mixers **112**, and **114** with in-phase and quadrature LO signals, respectively. The RF LO **420** can be implemented on the same IC as the receive signal portion **400** or can be configured as a distinct module. The downconverted I and Q signals are filtered in I and Q filters **132** and **134**, respectively, before being digitally converted and digitally upconverted to the desired IF.

[**0086**] The I signal is digitally converted using a first ADC **202** while the Q signal is digitally converted in a second ADC **204**. The digital I signal is upconverted to a digital in-phase IF signal using a first digital frequency converter **252**. The digital Q signal is upconverted to a digital quadrature signal using a second frequency converter **254**. A second LO **440** including an LO generator **442** and phase shifter **444** is used to provide the quadrature LO signals to first and second amplifiers **452** and **454** that drive the digital frequency converters **252** and **254**. The second LO **440** can be implemented on the same IC or on a module or substrate distinct from the receive signal portion **400**.

[**0087**] The digital I and Q IF signal components are coupled to the inputs of a digital signal combiner **260** where they are combined into a composite digital IF output signal. The receive signal portion **400** of the receiver **100** is depicted as providing a digital IF output signal. However, the receiver **100** can include a DAC at the output if an analog IF signal is desired.

[**0088**] The receiver **100** can be configured to self calibrate in order to compensate for any imbalances in the I and Q signal paths. The receiver **100** can be configured to include an I/Q detector **460** couple to one or more feedback loops configured to provide correction signals to compensate for gain and phase imbalances in the I and Q signal paths.

[**0089**] The receiver **100** can perform the calibration process at distinct intervals, such as power up, channel selection, or mode selection. In another embodiment, the receiver **100** can be configured to perform calibration on a periodic basis.

[**0090**] During calibration, a calibration tone can be injected into the front end of the receive signal portion **400**. In the embodiment shown in **FIG. 4**, the I and Q outputs of the first LO **420** are coupled to a tone multiplexer **426**. The tone multiplexer **426** is configured to select between the I and Q LO signals and couple the selected tone to a tone amplifier **412** that drives an input of the first multiplexer **410**. The first multiplexer **410** is configured to select the tone input during calibration mode.

[**0091**] Because the tone injected into the front end of the receive signal portion is generated by the same first LO **420** that is used to generate the local oscillator signals used in the first frequency conversion, the tone and LO signals are coherent and may differ by only a phase offset. The phase offset can be substantially minimized by minimizing the path differences experienced by the LO signals, or by introducing phase delays in one or more of the LO paths to equalize the paths.

[**0092**] Thus, during the calibration process, the tone multiplexer **426** can be configured to selectively alternate between the in-phase and quadrature LO signals to selectively introduce in-phase and quadrature signals to the receiver **100** front end. The signal in the receive signal portion **400** will be substantially an in-phase signal component during the portion of time that the tone multiplexer selects the in-phase LO signal. Similarly, the signal in the receive signal portion **400** will be substantially a quadrature signal component during the portion of time that the tone multiplexer selects the quadrature LO signal.

[**0093**] When the tone multiplexer **426** selects the in-phase tone, there is substantially no quadrature signal present in the receive signal portion **400**. The output of the first and second mixers **112** and **114** are DC signals representative of the phase and amplitude imbalances in the front end portion of the receiver **100**. The output from the digital signal combiner **260** is substantially a signal representative of the phase and amplitude contribution introduced by the complete I and Q signal processing path.

[**0094**] The output of the digital signal combiner **260** is coupled to an input of an I/Q detector **460**. The I/Q detector **460** includes an in-phase mixer **462** and a quadrature mixer **464** that each have one input coupled to the digital signal combiner **260** output. The LO port of the in-phase mixer **462** is driven by the in-phase LO signal from the second LO **440**. The LO port of the quadrature mixer **464** is driven by the quadrature LO signal from the second LO **440**. The outputs of the in-phase mixer **462** and quadrature mixer **464** are coupled to inputs of a signal combiner **466**. Therefore, the I/Q detector **460** is configured to generate a DC value representative of the composite DC offset from the receiver **400**. The composite DC offset is representative of the phase and amplitude imbalance of the receiver **100**.

[**0095**] The output of the I/Q detector **460** is coupled to one or more feedback loops. For example, a first feedback lop can be configured to compensate for amplitude imbalance while a second feedback loop can be configured to compen-

sate for phase imbalance. The output of the I/Q detector **460** is typically a DC error signal. The DC error signal is coupled to a calibration loop filter **470** that can be used to adjust the rate that the feedback loop adjusts the imbalances.

[**0096**] The output of the calibration loop filter **470** can be coupled to an amplifier **472** that can be used to amplify the error signal. In one embodiment, the amplifier **472** can be implemented as a comparator that is configured to toggle between two values depending on whether the DC offset is greater or less than a predetermined threshold, such as zero volts. The amplified error signal is coupled to a search module **474**, such as a binary search module, that can be configured to determine a feedback value based on a search.

[**0097**] The search module **474** can be configured, for example, to perform a binary search to determine a DC correction value. A binary search uses the amplifier **472** or comparator output to determine if the next increment is to a greater value or a lesser value. The binary search can continue until the search converges on a value. For example, if the search module **474** is configured to provide a 10-bit digital output, the binary search can converge in typically **11** or fewer iterations.

[**0098**] The output of the search module **474** is coupled to a multiplexer **476** that is configured to provide the correction value to either a gain feedback path or a phase feedback path. The gain feedback path includes a DAC **482** coupled to control the gain of the first and second amplifiers, **452** and **454**, that drive the digital frequency converters **252** and **254**. The phase feedback path includes a DAC **484** coupled to the digital frequency converters **252** and **254** to compensate for phase imbalances.

[**0099**] In one embodiment, the receiver **100** can initiate a calibration mode in which the tone multiplexer **426** selects the in-phase signal and couples the in-phase signal to the receiver **100** front end. The I/Q detector operates on the signal and causes the gain and phase feedback loops to converge upon values that are applied to the corresponding amplifier **452** and digital frequency converter **252**. The tone multiplexer **426** can then be configured to select the quadrature LO signal and the process can be repeated for the quadrature amplifier **454** and frequency converter **254**.

[**0100**] **FIG. 5** is a simplified functional block diagram of an embodiment of a receiver **100** having digital IF generation and I/Q imbalance calibration. The receiver **100** of **FIG. 5** is similar to the receiver shown in **FIG. 4**, except that the I/Q imbalance is performed using digital signal processing I/Q calibration modules **512** and **514** positioned in series with the I and Q signal paths.

[**0101**] The receiver **100** is configured to have at least two operating modes including a signal processing mode and a calibration mode. The receiver **100** operation in the signal processing mode is substantially the same as that described for the receiver embodiments of **FIGS. 3 and 4**. The embodiment of **FIG. 5** includes an output DAC **270** and also explicitly depicts the second LO **442** and phase shifter **444** as implemented in common with the signal processing path of the receiver **100**.

[**0102**] As was the case with the embodiment shown in **FIG. 4**, the embodiment of **FIG. 5** includes a first multiplexer **410** configured to select between an RF amplifier **102** output or a tone used during calibration mode. During signal processing mode, the I/Q calibration modules **512** and **514** correct the respective I and Q signal components by gain and phase compensation values determined during the calibration mode.

[**0103**] During calibration mode, the I or Q calibration tone is coupled to the front end of the receiver **100**. The first I/Q calibration module **512** is configured to monitor the digital I and Q signal components and is configured to adjust the gain and phase offset applied to the in-phase signal component. Similarly, the second I/Q calibration module **514** is configured to monitor the digital I and Q signal components and is configured to adjust the gain and phase offset applied to the quadrature signal component.

[**0104**] **FIG. 6** is a simplified flowchart of a method **600** of receiving a signal, such as a television signal that can be an analog television signal or a digital television signal depending on an operating mode. The method **600** can be performed by any of the receivers shown in **FIGS. 1-5**. Of course, the method **600** is not limited to processing of television signals.

[**0105**] The method **600** begins at block **610** where the receiver is provided a mode select control signal. The mode select signal may indicate the type of signal that is to be received, the signal source, an operating frequency range, and the like, or some combination of operating parameters. In one embodiment, the mode selection can indicate whether an analog signal, such as an NTSC television signal, or a digital signal, such as a DVB-T signal, is to be processed. The receiver can configure filters and amplifier gains based on the mode selection.

[**0106**] The receiver proceeds to block **620** and receives channel selection information. The receiver can be configured, for example, to receive an indication of an operating frequency band and a frequency of a desired channel or a designator of a desired channel.

[**0107**] The receiver proceeds to block **630** and configures the local oscillator frequencies based on the mode and channel selection information. For example, the receiver can be configured to implement downconversion to a low IF when an NTSC signal is to be received, and may be configured to implement direct downconversion to a zero-IF or baseband if a digital signal is to be received. The receiver may also configure the frequency of the second LO used for upconversion to the desired IF based on the operating mode.

[**0108**] After configuring the local oscillator frequencies, the receiver proceeds to block **640** and performs I/Q calibration, if I/Q calibration is incorporated into the receiver. The receiver can, for example, decouple the input signal from the receiver and introduce one or more calibration tones and correct for any I/Q imbalance based on the calibration tones.

[**0109**] After performing I/Q calibration, the receiver can proceed to block **650** and quadrature downconvert the desired channel to either a baseband signal or a low IF signal, depending on the mode selection. The receiver may also perform partial channel selection in order to remove some interferers and to provide anti-aliasing filtering. The receiver proceeds to block **660** and digitizes the downconverted I and Q signals.

[**0110**] The receiver proceeds to block **670** and digital filters the I and Q signals. The receiver can be configured to

perform channel selection in the digital domain using a digital filter selected from a plurality of digital filter responses based on the mode selection.

[0111] The receiver proceeds to block **680** and digitally upconverts the I and Q signals to the desired IF. The receiver can be configured to generate a LO signal and perform the frequency conversion completely in the digital domain. As such, the balance and relationship of the I and Q signals may be tightly controlled. The receiver can combine the digital I and Q IF signal components to generate a composite digital IF signal.

[0112] The receiver can then proceed to block **690** and convert the digital IF signal to an analog IF signal for processing and demodulation. The receiver can thus interface with legacy processing devices while incorporating digital IF generation.

[0113] A receiver and method of receiving signals are described. A receiver can selectively convert a desired RF channel to a low IF or a baseband signal using a direct conversion architecture. The receiver can be configured to downconvert the desired channel to I and Q signal components. The receiver can perform partial channel selection on the downconverted I and Q signals. The receiver can digitize the filtered I and Q signals and can digitally filter each of the digitized I and Q signals to perform channel selection.

[0114] The receiver can digitally upconvert the I and Q signals to an IF. The receiver can combine the digital I and Q IF signals to generate a composite digital IF signal. The receiver can convert the digital IF signal to an analog IF signal.

[0115] The receiver may implement one or more modules that can be configured to calibrate the receiver signal paths to substantially remove any I and Q imbalance in the signal paths. The modules can include feedback modules or can be implemented as digital signal processing modules placed in series with the I and Q signal paths.

[0116] The receiver can be implemented on a single IC. Such an implementation allows the various elements to be better matched than is generally possible using discrete elements or multiple ICs. The ability to closely match the elements of the receiver can reduce the level of DC offset error attributable to element mismatches.

[0117] The steps of a method, process, or algorithm described in connection with the embodiments disclosed herein may be embodied directly in hardware, in a software module executed by a processor, or in a combination of the two. The various steps or acts in a method or process may be performed in the order shown, or may be performed in another order. Additionally, one or more process or method steps may be omitted or one or more process or method steps may be added to the methods and processes. An additional step, block, or action may be added in the beginning, end, or intervening existing elements of the methods and processes.

[0118] The above description of the disclosed embodiments is provided to enable any person of ordinary skill in the art to make or use the disclosure. Various modifications to these embodiments will be readily apparent to those of ordinary skill in the art, and the generic principles defined herein may be applied to other embodiments without departing from the spirit or scope of the disclosure. Thus, the disclosure is not intended to be limited to the embodiments shown herein but is to be accorded the widest scope consistent with the principles and novel features disclosed herein.

What is claimed is:

1. A receiver comprising:

a downconverter configured to downconvert an input signal to a signal in a first frequency band;

an analog to digital converter (ADC) coupled to the downconverter and configured to digitize the signal in the first frequency band to produce a digital representation of the signal in the first frequency band; and

a digital upconverter configured to upconvert the digital representation of the signal in the first frequency band to a digital representation of the signal in a second frequency band.

2. The receiver of claim 1, wherein the first frequency band comprises one of a baseband frequency band or a low Intermediate Frequency (IF) band based on a mode of the receiver.

3. The receiver of claim 1, wherein the downconverter comprises:

an in-phase downconverter configured to downconvert an in-phase component of the input signal to the first frequency band; and

a quadrature downconverter configured to downconvert a quadrature component of the input signal to the first frequency band.

4. The receiver of claim 1, wherein the downconverter comprises:

an in-phase downconverter configured to downconvert an in-phase component of the input signal to substantially a baseband in-phase signal; and

a quadrature downconverter configured to downconvert a quadrature component of the input signal to substantially a baseband quadrature signal.

5. The receiver of claim 1, wherein the downconverter comprises:

an in-phase downconverter configured to downconvert an in-phase component of the input signal to a in-phase low Intermediate Frequency (IF) signal; and

a quadrature downconverter configured to downconvert a quadrature component of the input signal to a quadrature low IF signal.

6. The receiver of claim 1, further comprising a filter configured to perform at least partial channel selection of the signal in the first frequency band prior to the ADC.

7. The receiver of claim 1, further comprising a digital filter configured to perform channel selection of the digital representation of the signal in the first frequency band.

8. The receiver of claim 1, wherein the digital upconverter comprises:

a first digital upconverter configured to digitally upconvert an in-phase component of the input signal to an in-phase digital signal at a desired Intermediate Frequency (IF); and

a second digital upconverter configured to digitally upconvert a quadrature component of the input signal to a quadrature digital signal at the desired IF.

9. The receiver of claim 8, further comprising a digital signal combiner configured to combine the in-phase digital signal at the desired IF with the quadrature digital signal at the desired IF.

10. A receiver comprising:

a first frequency converter configured to downconvert a received signal to an in-phase baseband signal component;

a second frequency converter configured to downconvert the received signal to a quadrature baseband signal component;

a first analog filter coupled to the first frequency converter and configured to perform at least partial channel selection on the in-phase baseband signal component;

a second analog filter coupled to the second frequency converter and configured to perform at least partial channel selection on the quadrature baseband signal component;

a first Analog to Digital Converter (ADC) coupled to the first analog filter and configured to convert the in-phase baseband signal component to a digital in-phase baseband signal component;

a second ADC coupled to the second analog filter and configured to convert the quadrature baseband signal component to a digital quadrature baseband signal component;

a first digital filter coupled to the first ADC and configured to digitally filter the digital in-phase baseband signal component to generate a digitally filtered in-phase baseband signal component;

a second digital filter coupled to the second ADC and configured to digitally filter the digital quadrature baseband signal component to generate a digitally filtered quadrature baseband signal component;

a first digital upconverter configured to digitally upconvert the digitally filtered in-phase baseband signal component to an in-phase Intermediate Frequency (IF) signal component at a desired IF;

a second digital upconverter configured to digitally upconvert the digitally filtered quadrature baseband signal component to a quadrature IF signal component at the desired IF; and

a digital signal combiner configured to combine the in-phase IF signal component with the quadrature IF signal component.

11. A method of receiving a signal, the method comprising:

frequency converting an input signal to an intermediate signal in a first frequency band;

digitizing the intermediate signal; and

digitally converting the intermediate signal to a second frequency band.

12. The method of claim 11, wherein frequency converting the input signal comprises:

downconverting the input signal to an in-phase baseband signal component; and

downconverting the input signal to a quadrature baseband signal component.

13. The method of claim 11, wherein the intermediate signal comprises:

an in-phase baseband signal component; and

a quadrature baseband signal component.

14. The method of claim 11, further comprising performing partial channel selection on the intermediate signal.

15. The method of claim 11, wherein digitizing the intermediate signal comprises:

digitizing an in-phase signal component of the intermediate signal; and

digitizing a quadrature signal component of the intermediate signal.

16. The method of claim 11, wherein digitally converting the intermediate signal comprises:

digitally upconverting an in-phase signal component of the intermediate signal to an in-phase Intermediate Frequency (IF) component at a desired IF;

digitally upconverting a quadrature signal component of the intermediate signal to a quadrature IF component at the desired IF; and

combining the in-phase IF component with the quadrature IF component.

17. A method of calibrating a quadrature receiver, the method comprising:

injecting a calibration tone to a signal path of a quadrature receiver;

detecting an amplitude and phase imbalance of the quadrature receiver;

adjusting a gain of at least one of an in-phase and a quadrature signal path based on the amplitude imbalance; and

adjusting a phase of at least one of the in-phase and quadrature signal paths based on the phase imbalance.

18. The method of claim 17, wherein injecting the calibration tone comprises injecting one of a quadrature or an in-phase Local Oscillator (LO) signal to the signal path.

19. The method of claim 18, wherein the one of the quadrature or in-phase LO signal is synchronized with a LO signal used to downconvert the calibration tone to a DC signal.

20. The method of claim 17, wherein detecting the amplitude and phase imbalance of the quadrature receiver comprises:

downconverting an in-phase Intermediate Frequency (IF) signal component to a first DC signal;

downconverting a quadrature IF signal component to a second DC signal;

combining the first and second DC signals to generate a combined DC signal; and

determining the phase imbalance based on the combined DC signal.

21. A quadrature receiver calibration apparatus, the apparatus comprising:

a tone generator configured to generate a calibration tone;

a coupler configured to couple the calibration tone to a signal path of the quadrature receiver;

a detector configured to detect an in-phase and quadrature signal component when the calibration tone is coupled to the signal path;

a gain feedback module configured to adjust a gain of at least one of an in-phase signal path and a quadrature signal path; and

a phase feedback module configured to adjust a phase of at least one of the in-phase signal path and the quadrature signal path.

* * * * *