US008792008B2

(12) **United States Patent**
Gallagher et al.

(10) **Patent No.: US 8,792,008 B2**
(45) **Date of Patent: Jul. 29, 2014**

(54) **METHOD AND APPARATUS FOR SPECTRUM MONITORING**

(75) Inventors: **Timothy Gallagher**, Encinitas, CA (US); **Patrick Tierney**, Solana Beach, CA (US); **Jun Huang**, San Diego, CA (US)

(73) Assignee: **MaxLinear, Inc.**, Carlsbad, CA (US)

(*) Notice: Subject to any disclaimer, the term of this patent is extended or adjusted under 35 U.S.C. 154(b) by 52 days.

(21) Appl. No.: **13/607,916**

(22) Filed: **Sep. 10, 2012**

(65) **Prior Publication Data**

US 2013/0063608 A1 Mar. 14, 2013

Related U.S. Application Data

(60) Provisional application No. 61/532,098, filed on Sep. 8, 2011.

(51) **Int. Cl.**

H04N 17/00	(2006.01)
H04L 12/66	(2006.01)
H04L 12/26	(2006.01)
H04B 17/00	(2006.01)

(52) **U.S. Cl.**

CPC ***H04L 12/66*** (2013.01); *H04L 43/08* (2013.01); ***H04N 17/00*** (2013.01); *H04B 17/0042* (2013.01)

USPC **348/192**

(58) **Field of Classification Search**

USPC 348/192, 725, 572, 731, 729; 455/234.1, 136, 138, 234.2; 375/349, 375/350, 316

See application file for complete search history.

(56) **References Cited**

U.S. PATENT DOCUMENTS

6,038,435	A *	3/2000	Zhang	455/234.1
6,813,320	B1 *	11/2004	Claxton et al.	375/316
7,197,685	B2 *	3/2007	Limberg	714/756
8,588,339	B2 *	11/2013	Birru et al.	375/316
8,611,483	B2 *	12/2013	Zhu et al.	375/349
2010/0105332	A1 *	4/2010	McHenry et al.	455/62
2012/0163518	A1 *	6/2012	Reddy et al.	375/350

* cited by examiner

Primary Examiner — Paulos M Natnael

(74) *Attorney, Agent, or Firm* — McAndrews, Held & Malloy, Ltd.

(57) **ABSTRACT**

A system, such as a satellite reception assembly or customer premises gateway, may comprise an analog-to-digital converter operable to digitize a signal spanning an entire television spectrum (e.g., cable television spectrum or satellite television spectrum) comprising a plurality of television channels. The system may comprise a signal monitor operable to analyze a signal to determine a characteristic of the signal. The system may comprise a data processor operable to process a television channel to recover content carried on the television channel. The system may comprise a channelizer operable to select first and second portions of the signal, and concurrently output the first portion to the signal monitor and the second portion to the data processor.

18 Claims, 7 Drawing Sheets

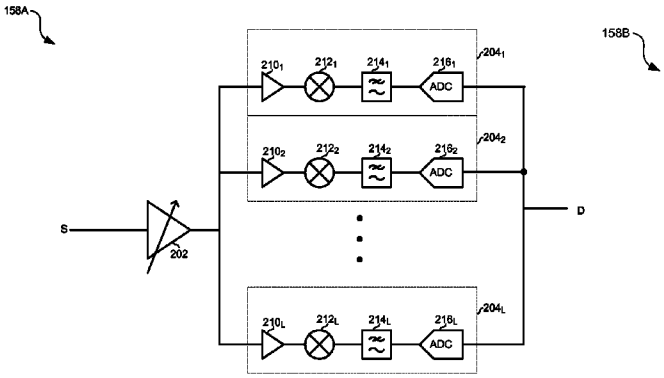

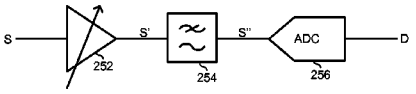

Comcast, Ex. 1001

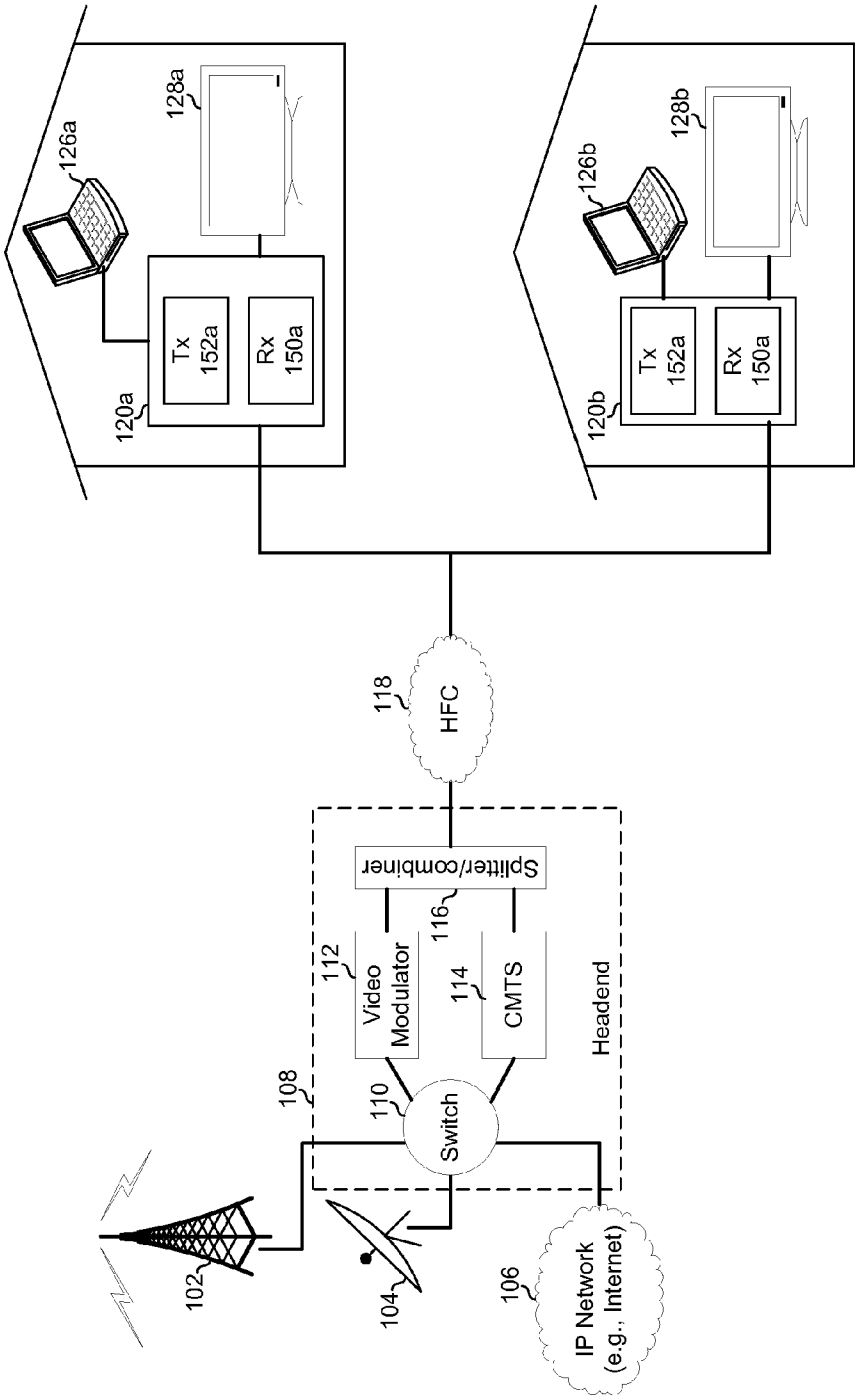
126a
128a
Tx
152a
Rx
150a
120a
126b
128b
Tx
152a
Rx
150a
120b
118
HFC
Splitter/combiner
116
112
Video
Modulator
114
CMTS
Headend
108
110
Switch
102
104
106
IP Network
(e.g., Internet)

FIG. 1A

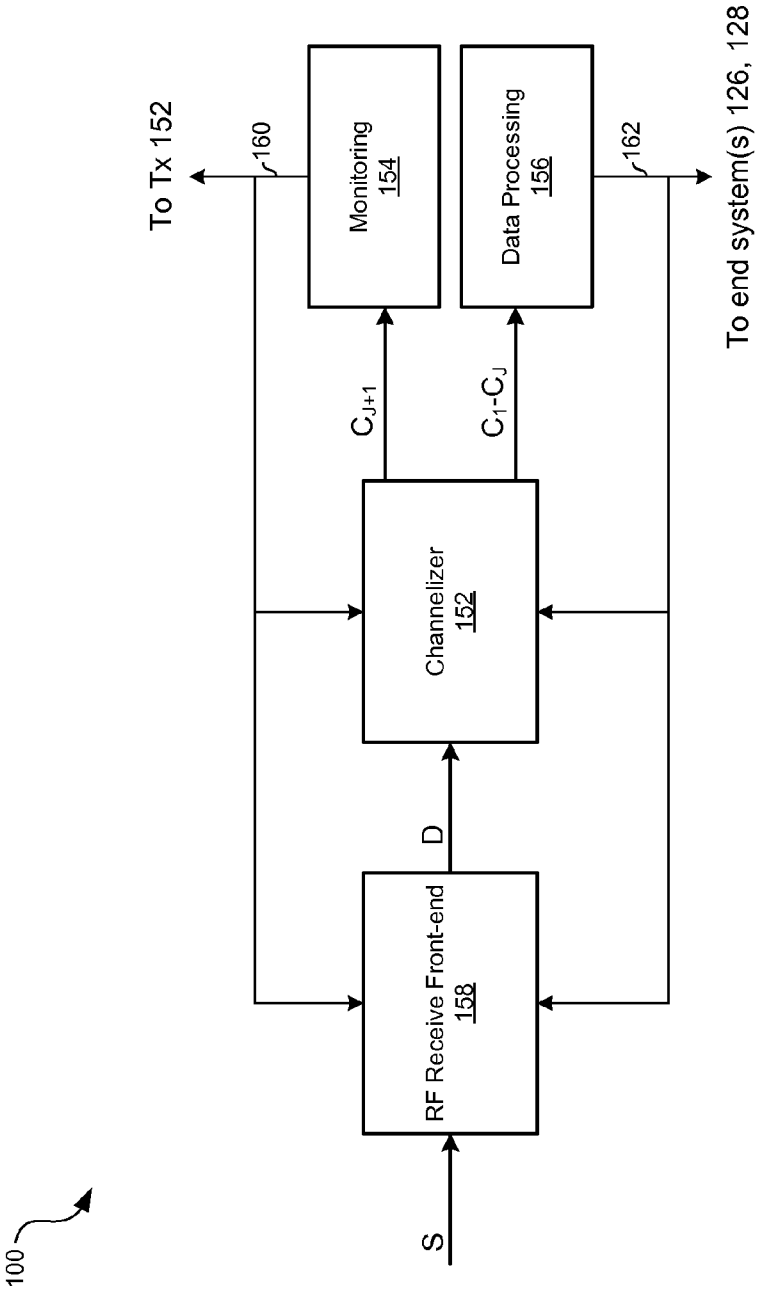
100
S
RF Receive Front-end
158
D
Channelizer
152
C_{J+1}
C_1-C_J
Monitoring
154
Data Processing
156
160
162
To Tx 152
To end system(s) 126, 128

FIG. 1B

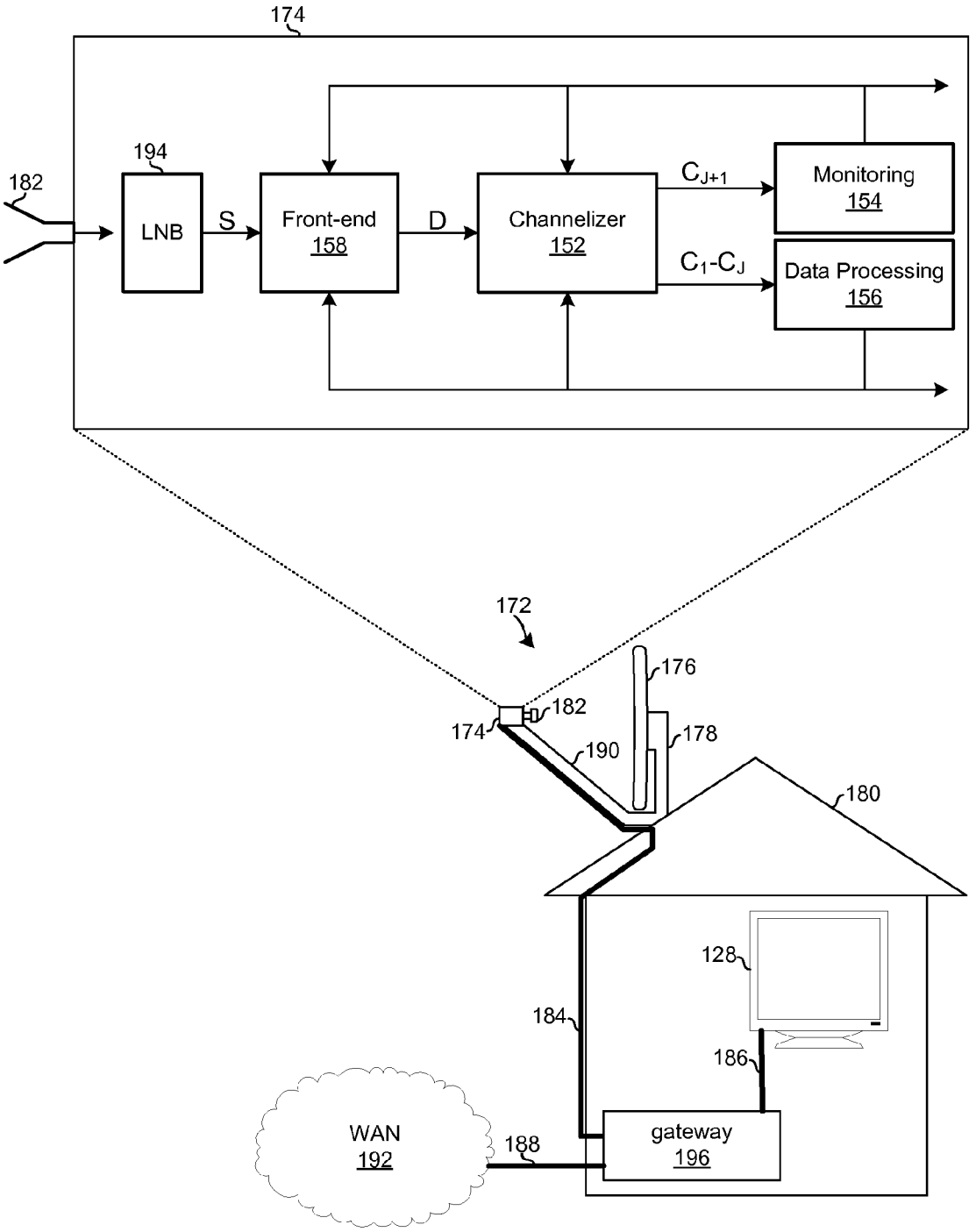
174
194
182
LNB
S
Front-end
158
D
Channelizer
152
C_{J+1}
Monitoring
154
C_1-C_J
Data Processing
156
172
176
182
174
178
190
180
128
184
186
WAN
192
188
gateway
196

FIG. 1C

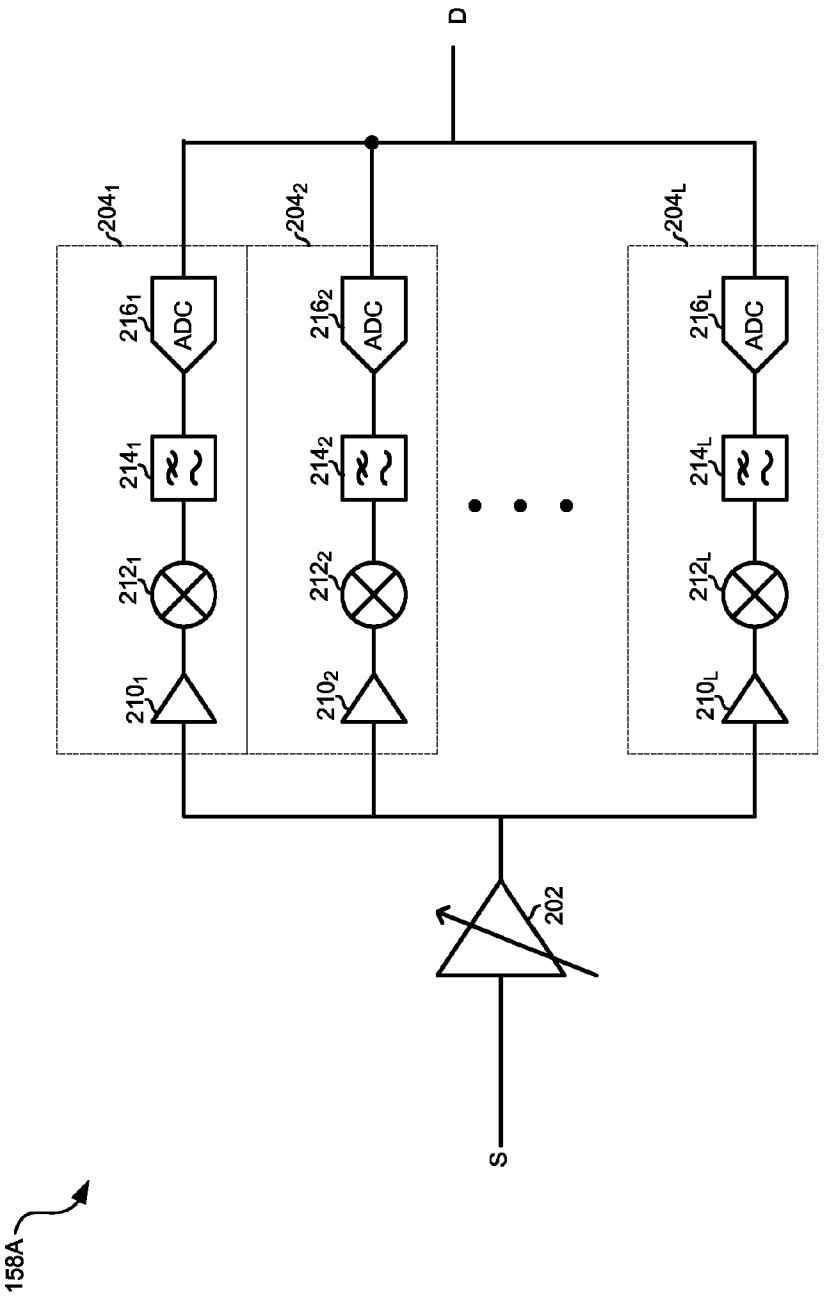
158A
S
202
D
204_1
204_2
204_L
210_1
212_1
214_1
216_1
ADC
210_2
212_2
214_2
216_2
ADC
210_L
212_L
214_L
216_L
ADC

FIG. 2A

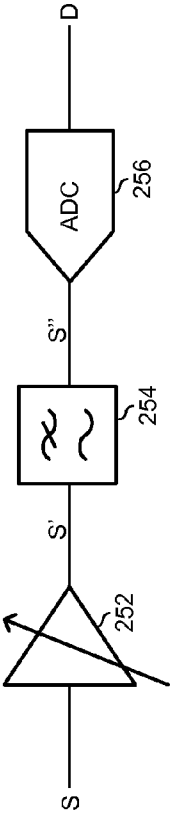

FIG. 2B

158B

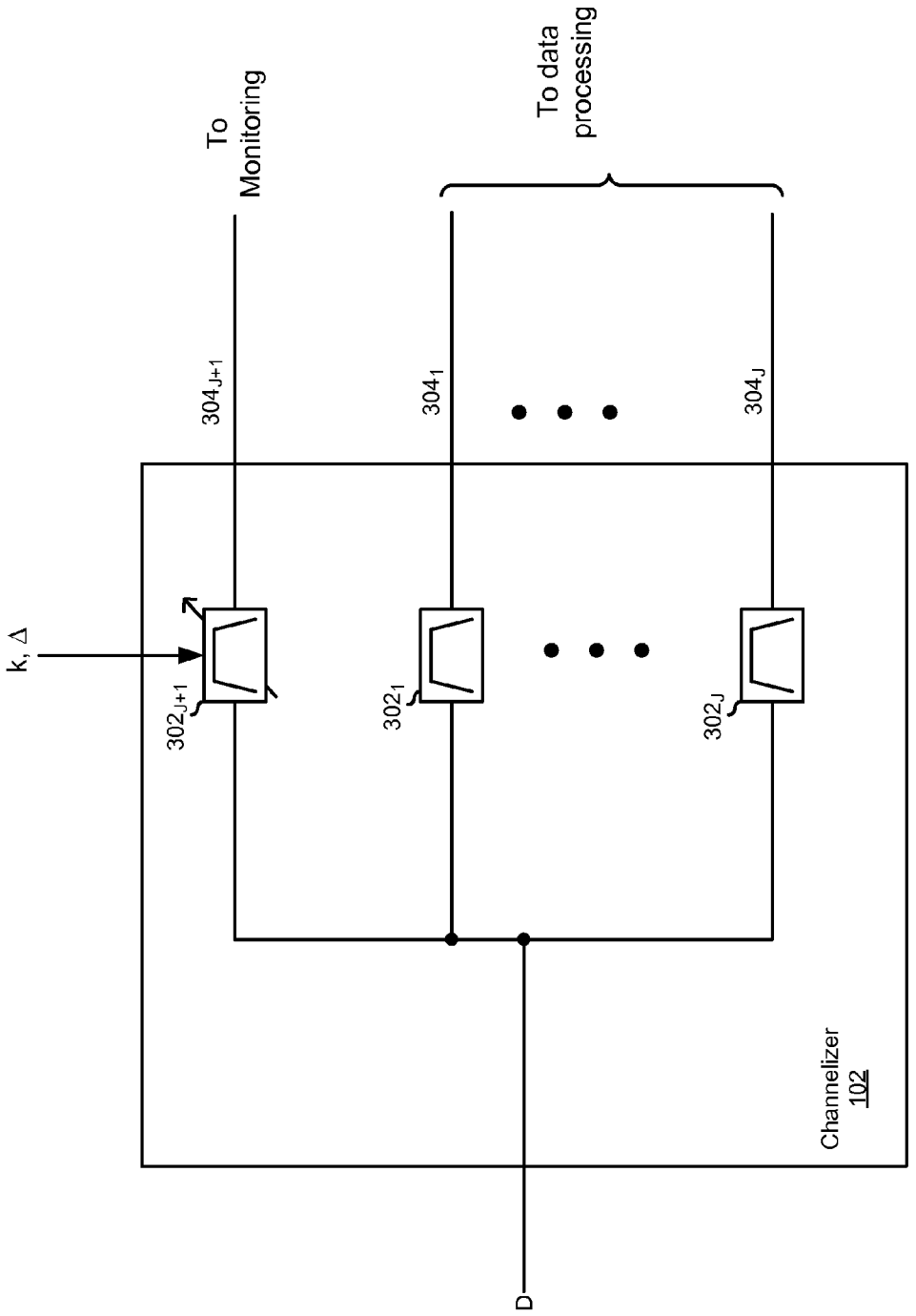
To Monitoring
To data processing
304_{J+1}
304_1
304_J
k, Δ
302_{J+1}
302_1
302_J
Channelizer 102
D

FIG. 3

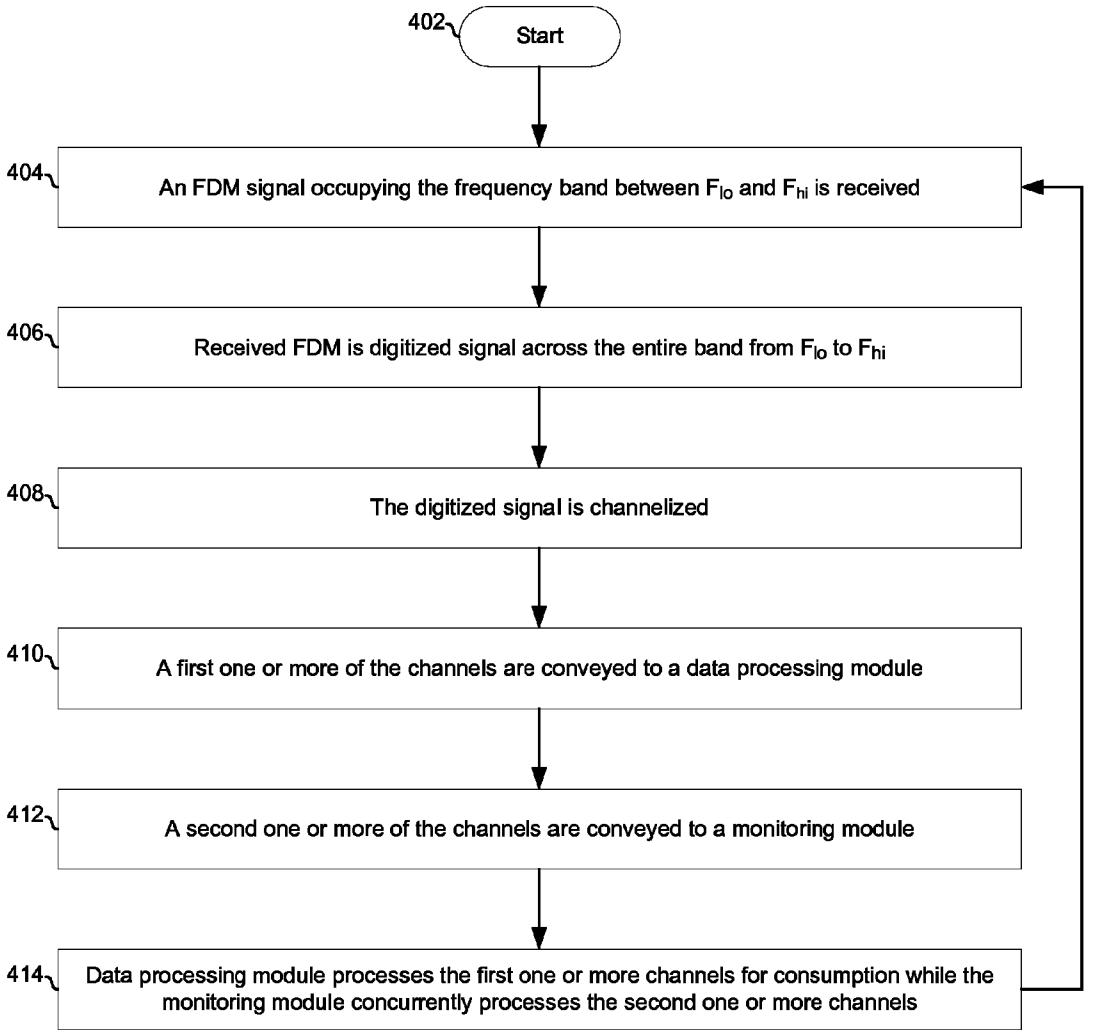
402
Start
404
An FDM signal occupying the frequency band between F_{lo} and F_{hi} is received
406
Received FDM is digitized signal across the entire band from F_{lo} to F_{hi}
408
The digitized signal is channelized
410
A first one or more of the channels are conveyed to a data processing module
412
A second one or more of the channels are conveyed to a monitoring module
414
Data processing module processes the first one or more channels for consumption while the monitoring module concurrently processes the second one or more channels

FIG. 4

METHOD AND APPARATUS FOR SPECTRUM MONITORING

PRIORITY CLAIM

This patent application makes reference to, claims priority to and claims benefit from U.S. Provisional Patent Application Ser. No. 61/532,098 entitled "Method and Apparatus for Spectrum Monitoring" and filed on Sep. 8, 2011.

The above application is hereby incorporated herein by reference in its entirety.

INCORPORATION BY REFERENCE

This patent application also makes reference to:

U.S. patent application Ser. No. 13/336,451 entitled "Method and Apparatus for Broadband Data Conversion" and filed on Dec. 23, 2011; and

U.S. patent application Ser. No. 13/485,003 entitled "Multi-layer Time-Interleaved Analog-to-Digital Converter (ADC)" and filed on May 31, 2012; and

U.S. patent application Ser. No. 13/588,769 entitled "Multi-Standard Coverage Map Generation" and filed on Aug. 17, 2012.

Each of the above stated applications is hereby incorporated herein by reference in its entirety.

FIELD OF THE INVENTION

Certain embodiments of the invention relate to signal processing. More specifically, certain embodiments of the invention relate to a method and system for spectrum monitoring.

BACKGROUND OF THE INVENTION

Network-based services can become unacceptable if network parameters fall outside of those for which receivers in the network were designed. For example, in a cable television system there are specifications for the number of channels on the plant, the types of channels, the signal levels of those channels and the impairments that can be on the plant that would affect the performance of the receiver. If some or all of these parameters deviate outside acceptable bounds, the user may experience unacceptable performance. Conventional methods and apparatuses for monitoring network parameters are too costly and impractical for use in customer-premises equipment (CPE).

Further limitations and disadvantages of conventional and traditional approaches will become apparent to one of skill in the art, through comparison of such systems with some aspects of the present invention as set forth in the remainder of the present application with reference to the drawings.

BRIEF SUMMARY OF THE INVENTION

A system and/or method is provided for spectrum monitoring, substantially as shown in and/or described in connection with at least one of the figures, as set forth more completely in the claims.

These and other advantages, aspects and novel features of the present invention, as well as details of an illustrated embodiment thereof, will be more fully understood from the following description and drawings.

BRIEF DESCRIPTION OF SEVERAL VIEWS OF THE DRAWINGS

FIG. **1**A depicts an example cable system in accordance with an example embodiment of the invention.

FIG. **1**B depicts an example receiver operable to perform spectrum monitoring in accordance with an example embodiment of the invention.

FIG. **1**C depicts an example satellite system in accordance with an example embodiment of the invention.

FIG. **2**A depicts an example RF front-end of a receiver operable to perform spectrum monitoring in accordance with an example embodiment of the invention.

FIG. **2**B depicts another example RF front-end of a receiver operable to perform spectrum monitoring in accordance with an example embodiment of the invention.

FIG. **3** depicts an example channelizer which may be utilized for performing spectrum monitoring in accordance with an example embodiment of the invention.

FIG. **4** is a flow chart illustrating example steps for spectrum monitoring in accordance with an example embodiment of the invention.

DETAILED DESCRIPTION OF THE INVENTION

As utilized herein the terms "circuits" and "circuitry" refer to physical electronic components (i.e. hardware) and any software and/or firmware ("code") which may configure the hardware, be executed by the hardware, and or otherwise be associated with the hardware. As utilized herein, "and/or" means any one or more of the items in the list joined by "and/or". For example, "x and/or y" means any element of the three-element set {(x), (y), (x, y)}. Similarly, "x, y, and/or z" means any element of the seven-element set {(x), (y), (z), (x, y), (x, z), (y, z), (x, y, z)}. As utilized herein, the terms "block" and "module" refer to functions than can be implemented in hardware, software, firmware, or any combination of one or more thereof.

FIG. **1**A depicts an example communication system in accordance with an example embodiment of the invention. Shown in FIG. **1** is a terrestrial television antenna **102**, a satellite dish **104**, an Internet Protocol (IP) network **106**, a headend **108**, a wide area network (e.g., hybrid fiber-coaxial (HFC) network) **118**, a gateways **120***a* and **120***b*, end systems **126***a* and **126***b* (e.g., computers), and end systems **128***a* and **128***b*. The headend **108** comprises a switch **110**, a video modulator **112**, a cable modem termination system (CMTS) **114**, and a splitter/combiner **116**.

For downstream traffic, the headend **108** may receive television signals via the antenna **102** and the satellite dish **104**, and may receive data via the IP network **106**. The switch **110** may convey the television signals to the video modulator **112** and the data to the CMTS **114**. The video modulator **112** may modulate the received television signals onto a carrier. The CMTS **114** may modulate the received data onto a carrier. The splitter/combiner **116** may combine the outputs of the video modulator **112** and the CMTS **114** resulting in a frequency division multiplexed (FDM) signal comprising one or more television channels and/or one or more DOCSIS channels. The FDM signal may be onto the wide area network (WAN) **118** for distribution to customer premise equipment (CPE). Each of the gateways **120***a* and **120***b* may comprise a receive module **150** operable to process the received FDM signal as described below.

In an example embodiment, each of the gateways **120***a* and **120***b* may be operable to transmit, via a module **152**, messages to the CMTS **114**. For such upstream data, the gateways **120***a* and **120***b* may modulate messages (e.g., network management/maintenance messages) onto one or more carriers for transmission via the WAN **118**. The splitter/combiner **116** may then convey the message to the CMTS **114**. The CMTS **114** may process the messages and, in an example embodi-

ment, adjust transmission parameters (e.g., modulation parameters, transmit power, frequency offsets, etc.) and/or perform other maintenance/management based on the received messages.

FIG. **1**B depicts an example receiver operable to perform spectrum monitoring in accordance with an example embodiment of the invention. Shown in FIG. **1**B is a receiver circuit **100** comprising an RF receive front-end module **158**, a channelizer module **102**, a monitoring module **154**, and a data processing module **156**.

The RF receive front-end **158** may be operable to process a received RF signal S to generate a digital signal D. The signal S may be the result of a plurality of television and/or DOCSIS channels being frequency division multiplexed into a single signal. The signal S may occupy a frequency band from F_{lo} to F_{hi}. The RF front-end **158** may, for example, amplify, downconvert, filter, and/or digitize the received signal S to generate the digital signal D. Example embodiments of the RF front-end are depicted in FIGS. **2**A and **2**B.

The channelizer **102** may be operable to select J+1 bands (represented as C_1-C_{J+1}) of the signal S and output each of the selected bands to the monitoring module **154** and/or the data processing module **156**, where J is an integer greater than 1. An example embodiment of the channelizer **102** is depicted in FIG. **3**. Each band C_j may, for example, correspond to the frequency band of one or more television channels. For example, each band C_j may be an integer multiple of 6 MHz (U.S.) or 8 MHz (EU).

In an example embodiment, the channelizer **102** may be implemented entirely in the digital domain and the channelization may be achieved via one or more digital filtering algorithms and/or other digital signal processing algorithms.

The monitoring module **154** may be operable to analyze the band C_{J+1} that it receives from the channelizer **102** to measure/determine characteristics such as, for example, signal power level vs. frequency, delay vs. frequency, phase shift vs. frequency, type and/or amount of modulation, code rate, interference levels, signal to noise ratio, a transfer function of the channel of over which the signal was received, an impulse response of the channel over which the signal was received, and/or any other characteristic that may help assess characteristics of the channel over which the signal was received, assess characteristics of the transmitter that sent the signal and/or any otherwise be pertinent to performance of the communication system. The monitoring module may also be operable to generate one or more control signals **160** for configuring the channelizer **102** and/or for configuring the RF front-end **158**. Additionally or alternatively, the control signal(s) **160** output by the monitoring module **154** may control the transmission of network management/maintenance messages by the device **150**. Such message may comprise, for example, network status updates indicating whether one or more communication parameters of one or more received television or DOCSIS channels are outside acceptable bounds, and/or conveying measured/determined characteristics back to a source of the received signal (e.g., back to a cable headend), In an example embodiment, the monitoring module **174** may be operable to demodulate signals for measuring one or more characteristics such as signal-to-noise ratio, code rate.

The data processing module **156** may be operable to process the bands C_1-C_J conveyed to it by the channelizer **102** to recover data present in one or more television channels present in those bands of the signal S. The data processing module **156** may, for example, perform synchronization, equalization, and decoding. The data processing module **156** may output processed data (e.g., MPEG transport stream packets and/or Internet Protocol packets) to end systems **126**, perhaps via an interface such as an HDMI interface and/or an Ethernet interface (not shown). The data processing module **156** may also be operable to generate one or more control signals **162** for configuring the channelizer **102** and/or the receive front-end **158**.

The parallel arrangement of the monitoring module **154** and data processing module **156** may enable determination of signal and/or channel characteristics without having to interrupt service to user equipment **126** and **128**.

In an example embodiment, the signal S may be a cable television signal with F_{lo}≈55 MHz, F_{hi}≈1002 MHz. In an example embodiment, the signal S may be a MoCA signal with with F_{lo}≈1150 MHz and F_{hi}≈2100 MHz. These numbers are purely for illustration and not intended to be limiting.

In an example embodiment, the signal S may be a satellite television signal such as may be at the input of a LNB, at the output of a LNB, or at the input of a indoor unit (e.g., set top box). In such an embodiment, the front-end **158**, channelizer **152**, data processing module **154**, and/or monitoring module **154** may reside in the indoor unit (e.g., set-top box), outdoor unit (e.g., satellite dish or accompanying components), and/or may be distributed among the indoor unit and outdoor unit of a satellite installation residing at a customer premises. An example of such an embodiment is shown in FIG. **1**C.

In operation of such an example embodiment, the signal S may be amplified, possibly downconverted, and digitized by the RF front-end **158** to generate the signal D. The channelizer **102** may then select J bands of the signal D for output to the data processing module **156**. Each of the selected bands C_1-C_J may, for example, comprise one or more of the cable television channels and/or one or more of the DOCSIS channels that make up the signal S. The data processing module **156** may provide one or more control signals to determine which portion of the signal D is selected for each of the bands C_1-C_J. The selection may be based, for example, on which television channels are being consumed by end systems **128** and/or whether DOCSIS data is being consumed by end systems **126**. The channelizer **102** may also select one band, represented as band C_{J+1}, to be output to the monitoring module **154**. Band C_{J+1} may comprise any portion or portions (including the entire bandwidth from F_{lo} to F_{hi}) of the signal D. Which portion of the signal S is selected as band C_{J+1} may, for example, be configured by the monitoring module **154**. The data processing module **156** may process one or more of bands C_1-C_J to recover data on one or more channels (e.g., television and/or DOCSIS channels) present in those bands while the monitoring module **154** may concurrently process band C_{J+1} to measure/determine characteristics of all or a portion of the signal S between f_{lo} and f_{hi}.

FIG. **1**C depicts an example satellite system in accordance with an example embodiment of the invention. Shown in FIG. **1**C is a satellite dish assembly **172**, and a gateway **196**. The subassembly **174** comprises a feed horn **182**, an LNB **194**, the front-end **158**, the channelizer **152**, the monitoring module **154**, and the data processing module **156**. The various modules of the subassembly **174** may reside in one or more housings, on one or more printed circuit boards, and/or one or more integrated circuits (e.g., one or more silicon dice). In another example embodiment, the monitoring module **154** and/or the data processing module **156** may reside in the gateway **196**.

In the example embodiment depicted, the satellite dish assembly **172** comprises a parabolic reflector **176** and a subassembly **174** mounted (e.g., bolted or welded) to a support structure **178** which, in turn, comprises a boom **190** and attaches (e.g., via bolts) to the premises **180** (e.g., to the roof).

In another example embodiment, all or a portion of the modules **152**, **154**, and/or **156** may be mounted to the premises **180** separate from the satellite dish (e.g., connected via wired and/or wireless connections), but may still be part of the "outdoor unit."

The gateway **196** may receive data from the satellite dish assembly **172** (via cable(s) **184**). The gateway and may transmit data onto and receive data from the WAN **192** (via broadband connection **188**). The gateway **196** may transmit data to and receive data from user equipment **128** and **126** (via one or more connections **186**).

FIG. **2**A depicts an example RF front-end of a receiver operable to perform spectrum monitoring in accordance with an example embodiment of the invention. The RF front-end **158**A shown in FIG. **2**A comprises a variable gain amplifier **202**, and receive chains $\mathbf{204}_1$-$\mathbf{204}_L$, where L is an integer greater than or equal to 1. Each receive chains $\mathbf{204}_1$ may comprise an amplifier module $\mathbf{210}_1$, a mixer module $\mathbf{212}_1$, a filter module $\mathbf{214}_1$, and an analog-to-digital converter (ADC) module $\mathbf{216}_1$, where 1 is an integer between 1 and L.

Each amplifier $\mathbf{210}_1$ may be operable to amplify a band **1** of the signal S. Each mixer $\mathbf{212}_1$ may be operable to mix a band **1** of the signal S with a local oscillator signal (not shown) to downconvert the band **1** to a lower frequency. Each filter module $\mathbf{214}_1$ may be operable to bandpass filter the band **1** to remove/attenuate frequencies outside band **1**. Each ADC **216** may be operable to convert the band **1** of the analog signal S to a corresponding digital representation. Operation of the RF front-end **158** and/or processing of signals generated by the front-end **158**, may, for example, be as described in U.S. patent application Ser. No. 13/336,451 entitled "Method and Apparatus for Broadband Data Conversion" which is incorporated by reference herein, as set forth above.

In an example embodiment, the front-end **158**A may reside in a cable gateway such as the cable gateway **120** described above. In an example embodiment, the front-end **158**A may reside in satellite gateway/set-top box and/or in an outdoor unit of a satellite reception assembly (e.g., collocated on-chip or on-PCB with a satellite low-noise block downconverter (LNB)).

FIG. **2**B depicts another example RF front-end of a receiver operable to perform spectrum monitoring in accordance with an example embodiment of the invention. The RF front-end **158**B shown in FIG. **2**B comprises a variable gain amplifier **252**, a filter **254**, and an ADC **256**. Functions performed by the RF front-end **158**B may be referred to as "full-spectrum capture" (or "FSC").

In the front-end **158**B, the entire bandwidth, from F_{lo} to F_{hi}, of signal S may be amplified by the amplifier **252** to generate S'. The amplified signal S' may be then filtered by the filter **254** to remove undesired signals outside of F_{lo} to F_{hi} and generate signal S". The signal S", from F_{lo} to F_{hi}, may then be digitized by the ADC **256** to generate signal D. In an example embodiment, the ADC may be as described in U.S. patent application Ser. No. 13/485,003 entitled "Multi-layer Time-Interleaved Analog-to-Digital Converter (ADC)," which is incorporated by reference herein, as set forth above.

In an example embodiment, the ADC **256** may be capable of digitizing a signal S wherein F_{lo} to F_{hi} is 1 GHz or higher. Accordingly, for cable television/DOCSIS, the ADC **256** may be operable to digitize the entire cable downstream (e.g., from ~55 MHz to ~1002 MHz). Similarly, for satellite television, the ADC **256** may be operable to digitize the received signal at the input of the LNB, and/or the downconverted signal (e.g., from ~1 GHz to ~2 GHz) at the output by an LNB.

FIG. **3** depicts an example channelizer which may be utilized for performing spectrum monitoring in accordance with an example embodiment of the invention. Band selection filters $\mathbf{302}_1$-$\mathbf{302}_J$ of the channelizer **102** may each process the signal D to recover a corresponding one of the J selected bands of the signal D, and output the band on a corresponding one of the ports $\mathbf{304}_1$ to $\mathbf{304}_J$. A band selection filter $\mathbf{302}_{J+1}$ of the channelizer **102** may process the signal D to recover band from the signal D, and output band C_{J+1} on the port $\mathbf{304}_{J+1}$. Which band or bands are selected by the filter $\mathbf{302}_{J+1}$ may be configured based on one or more control signals input to the channelizer **102**. For example, the value of a parameter k may determine the center frequency of the portion of signal D that is to be selected as by the filter $\mathbf{302}_{J+1}$, and the value of Δ may determine the bandwidth of the portion of this signal D that is selected as band C_{J+1} for output on the port $\mathbf{304}_{J+1}$. In this manner, all of the signal D between F_{lo} and F_{hi} or any portion or portions of the signal D, may be selected for output on the port $\mathbf{304}_{J+1}$.

FIG. **4** is a flow chart illustrating example steps for spectrum monitoring in accordance with an example embodiment of the invention. After start step **402**, in step **404**, the receiver circuit **100** may receive a frequency division multiplexed (FDM) signal comprising one or more channels (e.g., satellite television channels, cable television channels, and/or DOCSIS channels) occupying a frequency band between F_{lo} and F_{hi}. In step **406**, the received FDM signal is digitized across the full band from F_{lo} to F_{hi}. In step **408**, the digitized signal is channelized into one or more bands. In step **410**, a first one or more of the bands are conveyed to a data processing module. In step **412** a second one or more of the bands are output to a monitoring module. In step **414**, the data processing module processes one or more of the first one or more bands to recover data on those bands while the monitoring module concurrently processes the second one or more bands to determine characteristics of all or a portion of the frequency band from F_{lo} to F_{hi}.

Other embodiments of the invention may provide a non-transitory computer readable medium and/or storage medium, and/or a non-transitory machine readable medium and/or storage medium, having stored thereon, a machine code and/or a computer program having at least one code section executable by a machine and/or a computer, thereby causing the machine and/or computer to perform the steps as described herein for spectrum monitoring

Accordingly, the present invention may be realized in hardware, software, or a combination of hardware and software. The present invention may be realized in a centralized fashion in at least one computing system, or in a distributed fashion where different elements are spread across several interconnected computing systems. Any kind of computing system or other apparatus adapted for carrying out the methods described herein is suited. A typical combination of hardware and software may be a general-purpose computing system with a program or other code that, when being loaded and executed, controls the computing system such that it carries out the methods described herein. Another typical implementation may comprise an application specific integrated circuit or chip.

The present invention may also be embedded in a computer program product, which comprises all the features enabling the implementation of the methods described herein, and which when loaded in a computer system is able to carry out these methods. Computer program in the present context means any expression, in any language, code or notation, of a set of instructions intended to cause a system having an information processing capability to perform a particular function either directly or after either or both of the following: a)

conversion to another language, code or notation; b) reproduction in a different material form.

While the present invention has been described with reference to certain embodiments, it will be understood by those skilled in the art that various changes may be made and equivalents may be substituted without departing from the scope of the present invention. In addition, many modifications may be made to adapt a particular situation or material to the teachings of the present invention without departing from its scope. Therefore, it is intended that the present invention not be limited to the particular embodiment disclosed, but that the present invention will include all embodiments falling within the scope of the appended claims.

What is claimed is:

1. A system comprising:

an analog-to-digital converter operable to digitize a received signal spanning an entire television spectrum comprising a plurality of television channels, said digitization resulting in a digitized signal;

a signal monitor operable to:

analyze said digitized signal to determine a characteristic of said digitized signal; and

report said determined characteristic to a source of said received signal;

a data processor operable to process a television channel to recover content carried on the television channel; and

a channelizer operable to:

select a first portion of said digitized signal;

select a second portion of said digitized signal; and

concurrently output said first portion of said digitized signal to said signal monitor and said second portion of said digitized signal to said data processor.

2. The system of claim **1**, wherein said first portion of said digitized signal spans said entire television spectrum.

3. A method comprising:

performing by one or more circuits:

receiving a signal having a bandwidth that spans from a first frequency, F_{lo}, to a second frequency, F_{hi}, wherein said signal carries a plurality of channels;

digitizing said received signal from F_{lo} to F_{hi} to generate a digitized signal;

selecting a first portion of said digitized signal;

selecting a second portion of said digitized signal; and

concurrently outputting said selected first portion and said selected second portion, wherein:

said selected first portion is output to a signal analyzer which analyzes said selected first portion to determine one or more characteristics of the received signal, and which reports said determined one or more characteristics to a source of said received signal; and

said selected second portion is output to a data processor for recovery of data carried on one or more of said plurality of channels.

4. The method of claim **3**, wherein said first portion comprises all of said received signal from F_{lo} to F_{hi}.

5. The method of claim **3**, wherein said one or more characteristics is one of: signal power vs. frequency, phase vs. frequency, signal-to-noise ratio, peak-to-average ratio, noise levels, bit error rate, and symbol error rate.

6. The method of claim **3**, wherein:

said received signal is a cable television signal; and

said plurality of channels comprises a plurality of television channels.

7. The method of claim **3**, wherein:

said received signal is a satellite television signal output by a low noise block downconverter; and

said plurality of channels comprises a plurality of television channels.

8. The method of claim **7**, wherein said one or more circuits reside in a customer premises satellite reception assembly.

9. The method of claim **3**, wherein said one or more circuits reside in a customer premises gateway.

10. The method of claim **3**, wherein a bandwidth and/or center frequency of said selected first portion is configurable during operation of said one or more circuits.

11. A system comprising:

one or more circuits that are operable to:

receive a signal having a bandwidth that spans from a first frequency, F_{lo}, to a second frequency, F_{hi}, wherein said signal carries a plurality of channels;

digitize said received signal from F_{lo} to F_{hi} to generate a digitized signal;

select a first portion of said digitized signal;

select a second portion of said digitized signal; and

concurrently output said selected first portion and said selected second portion, wherein:

said selected first portion is output to a signal analyzer that is operable to analyze said first portion to determine one or more characteristics of said first portion, and that is operable to report said determined one or more characteristics to a source of said received signal; and

said selected second portion is output to a data processor for recovery of data carried on one or more of said plurality of channels.

12. The system of claim **11**, wherein said first portion comprises all of said received signal from F_{lo} to F_{hi}.

13. The system of claim **11**, wherein said one or more characteristics is one of: signal power vs. frequency, phase vs. frequency, signal-to-noise ratio, peak-to-average ratio, noise levels, bit error rate, and symbol error rate.

14. The system of claim **11**, wherein:

said received signal is a cable television signal; and

said plurality of channels comprises a plurality of television channels.

15. The system of claim **11**, wherein:

said received signal is a satellite television signal output by a low noise block downconverter; and

said plurality of channels comprises a plurality of television channels.

16. The system of claim **15**, wherein said one or more circuits reside in a customer premises satellite reception assembly.

17. The system of claim **11**, wherein said one or more circuits reside in a customer premises gateway.

18. The system of claim **11**, wherein a bandwidth and/or center frequency of said selected first portion is configurable during operation of said one or more circuits.

* * * * *