US 20080313691A1

(19) United States

(12) Patent Application Publication

Cholas et al.

(10) Pub. No.: US 2008/0313691 A1

(43) Pub. Date: Dec. 18, 2008

(54) PREMISES GATEWAY APPARATUS AND METHODS FOR USE IN A CONTENT-BASED NETWORK

(76) Inventors: **Chris Cholas**, Frederick, CO (US); **William L. Helms**, Longmont, CO (US); **Louis D. Williamson**, Denver, CO (US); **Jeffrey P. Markley**, Golden, CO (US)

Correspondence Address:
**Robert F. Gazdzinski**
**Suite 375**
**11440 West Bernardo Court**
**San Diego, CA 92127 (US)**

(21) Appl. No.: **11/818,236**

(22) Filed: **Jun. 13, 2007**

**Publication Classification**

(51) **Int. Cl.**
*H04N 7/173* (2006.01)
*H04L 12/28* (2006.01)
*H04N 7/26* (2006.01)

(52) **U.S. Cl.** ..... **725/131**; 370/401; 386/124; 725/105

(57) **ABSTRACT**

Apparatus and methods for premises gateway functions that integrate or unify functions typically distributed across multiple devices within a content-based network. In one embodiment, the out-of-band (OOB) signaling functionality normally provided in each of a set-top-box (STB) and digital video recorder (DVR) are unified into a common OOB (e.g., DOCSIS) capable premises gateway device, thereby obviating OOB tuners and related components from each device. In another variant, the premises gateway is adapted for all-IP operation, such as for use with IP-based computers and IP set-top boxes, etc. Fully unified variants are also disclosed, wherein the DVR and/or STB functions are physically integrated within the premises gateway.

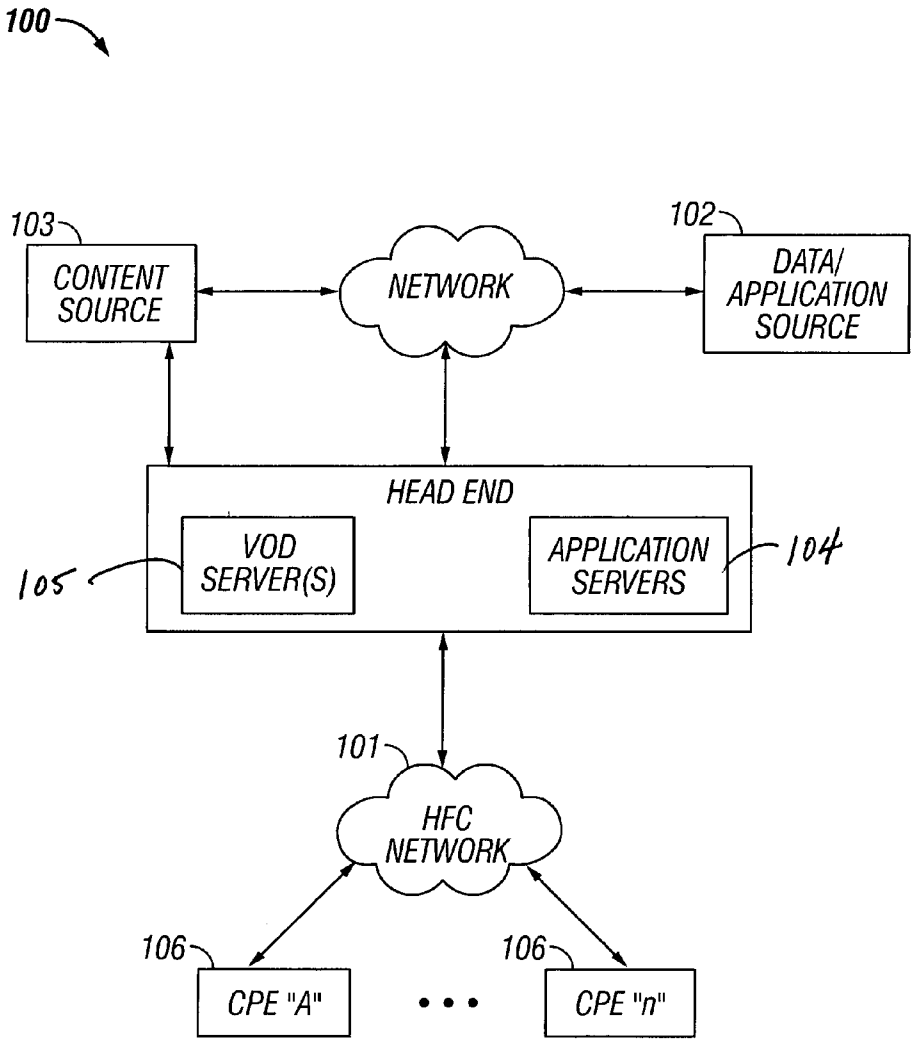




Comcast, Ex. 1017

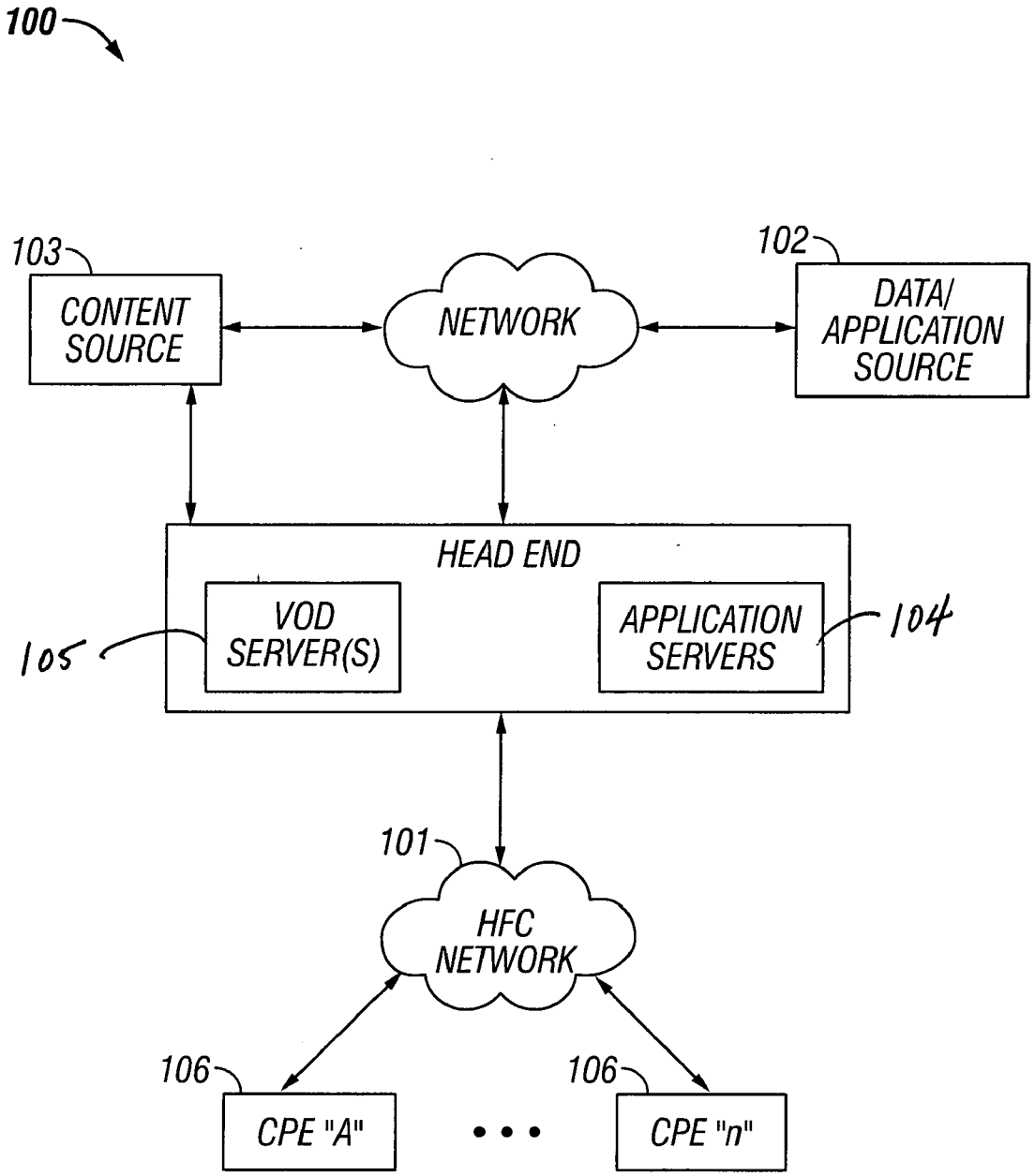
100
103
CONTENT SOURCE
NETWORK
102
DATA/ APPLICATION SOURCE
HEAD END
VOD SERVER(S)
105
APPLICATION SERVERS
104
101
HFC NETWORK
106
CPE "A"
106
CPE "n"

FIG. 1

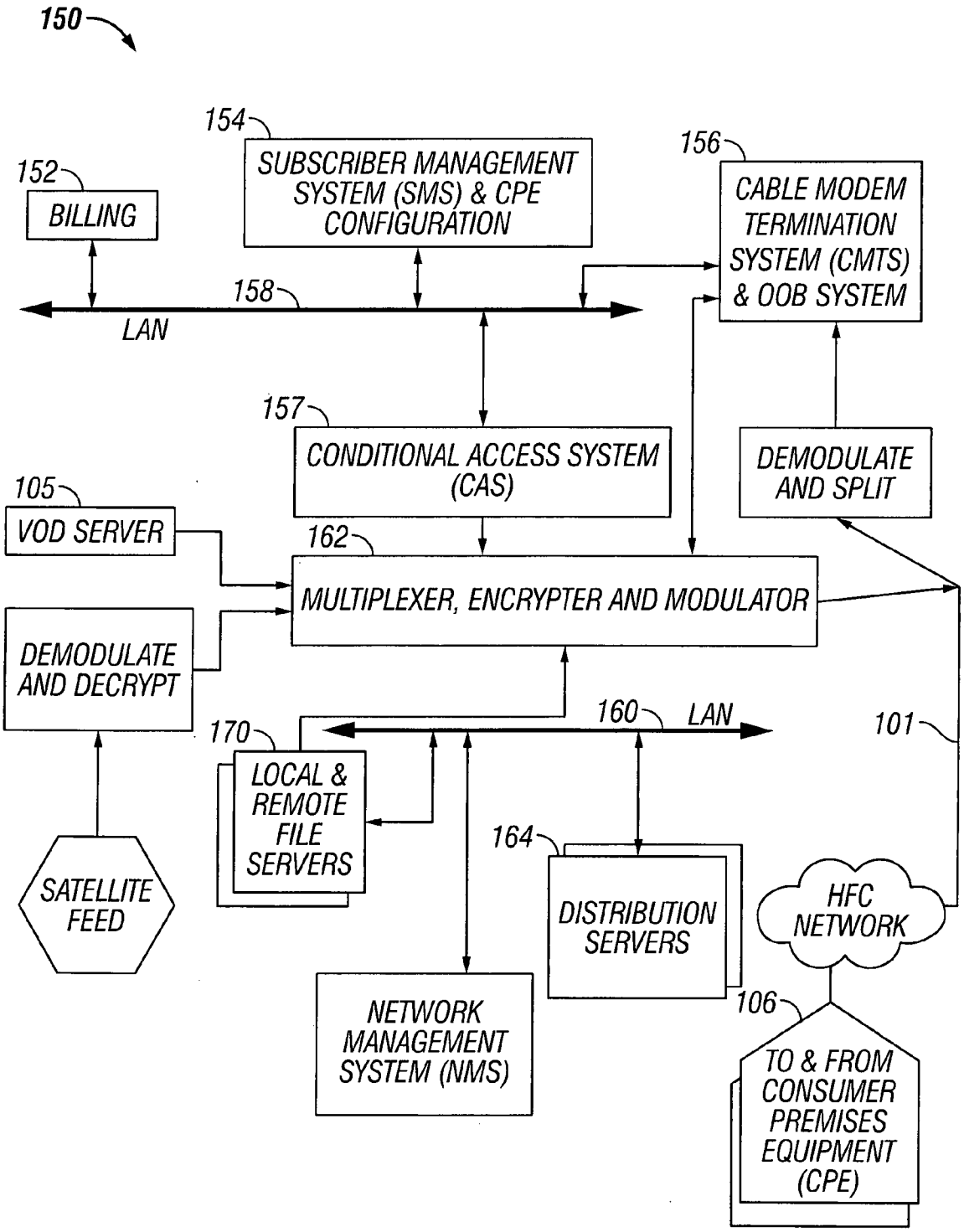
150
154
SUBSCRIBER MANAGEMENT SYSTEM (SMS) & CPE CONFIGURATION
156
CABLE MODEM TERMINATION SYSTEM (CMTS) & OOB SYSTEM
152
BILLING
158
LAN
157
CONDITIONAL ACCESS SYSTEM (CAS)
DEMODULATE AND SPLIT
105
VOD SERVER
162
MULTIPLEXER, ENCRYPTER AND MODULATOR
DEMODULATE AND DECRYPT
160
LAN
101
170
LOCAL & REMOTE FILE SERVERS
164
SATELLITE FEED
DISTRIBUTION SERVERS
HFC NETWORK
NETWORK MANAGEMENT SYSTEM (NMS)
106
TO & FROM CONSUMER PREMISES EQUIPMENT (CPE)

FIG. 1a

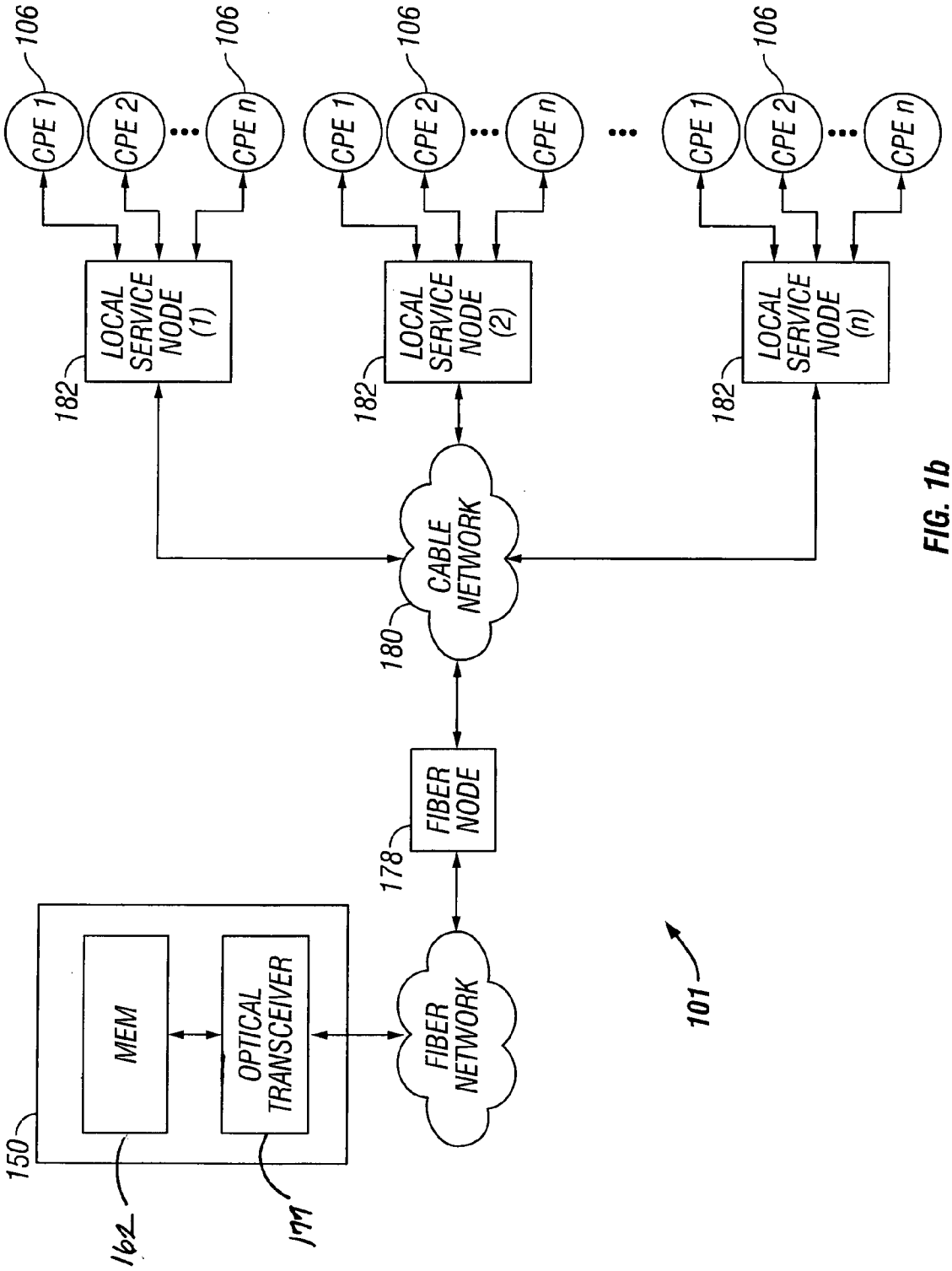
106
CPE 1
CPE 2
CPE n
LOCAL SERVICE NODE (1)
LOCAL SERVICE NODE (2)
LOCAL SERVICE NODE (n)
182
CABLE NETWORK
180
FIBER NODE
178
FIBER NETWORK
MEM
OPTICAL TRANSCEIVER
150
162
177
101

FIG. 1b

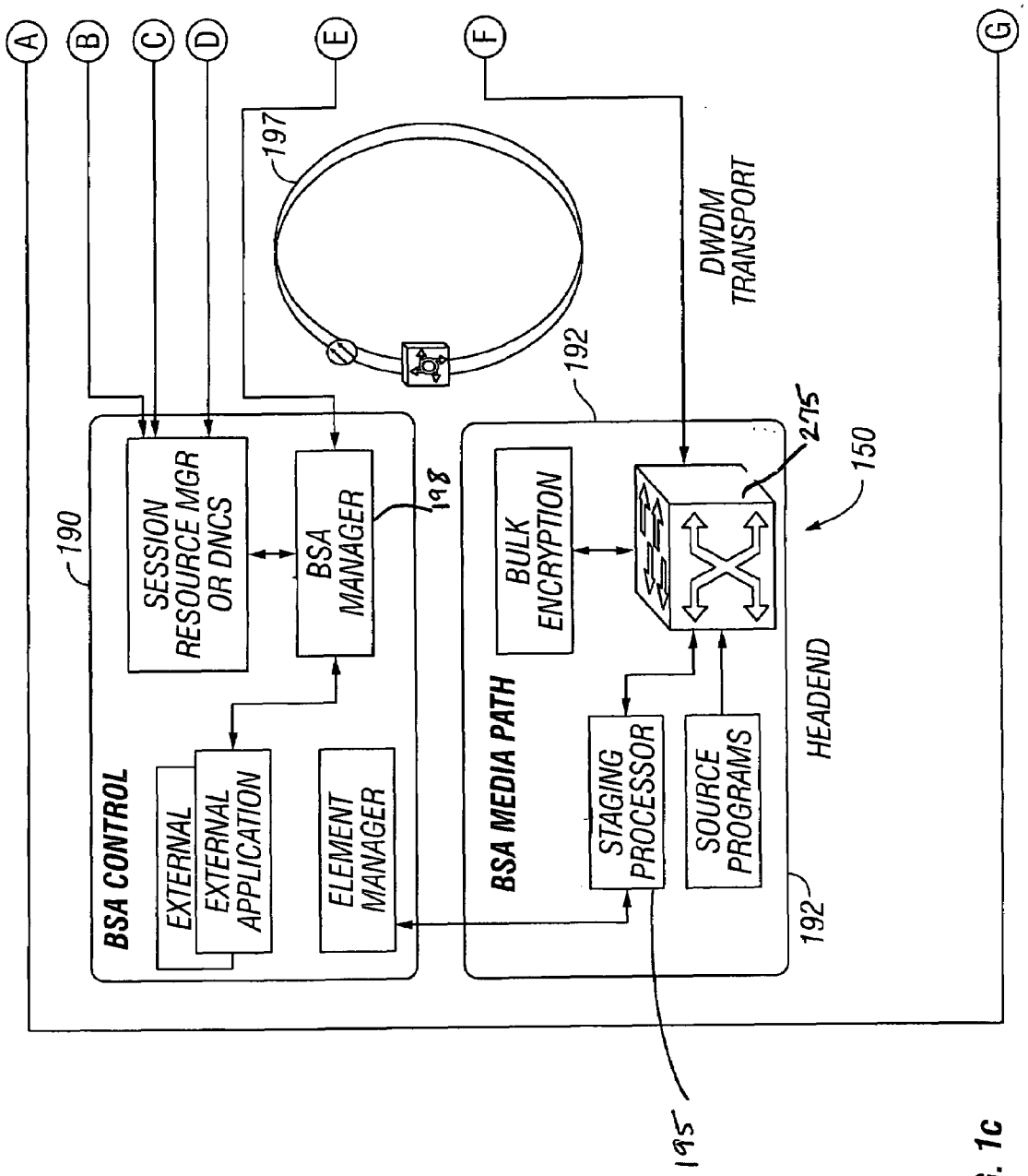
A
B
C
D
E
F
G
190
BSA CONTROL
SESSION RESOURCE MGR OR DNCS
BSA MANAGER
198
EXTERNAL
EXTERNAL APPLICATION
ELEMENT MANAGER
197
192
BSA MEDIA PATH
BULK ENCRYPTION
STAGING PROCESSOR
SOURCE PROGRAMS
275
150
HEADEND
DWDM TRANSPORT
192
195

FIG. 1c

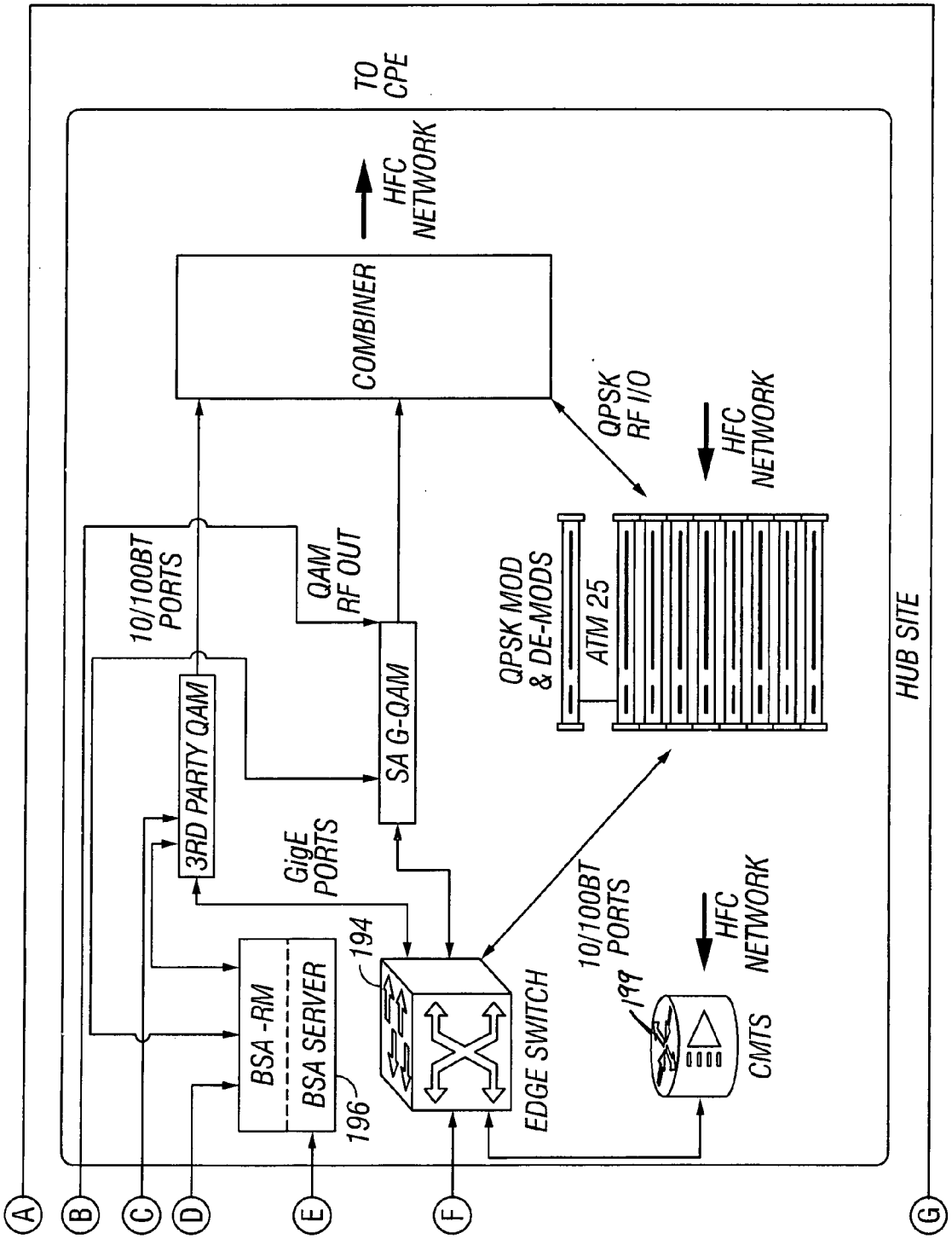


FIG. 1c (Continued)

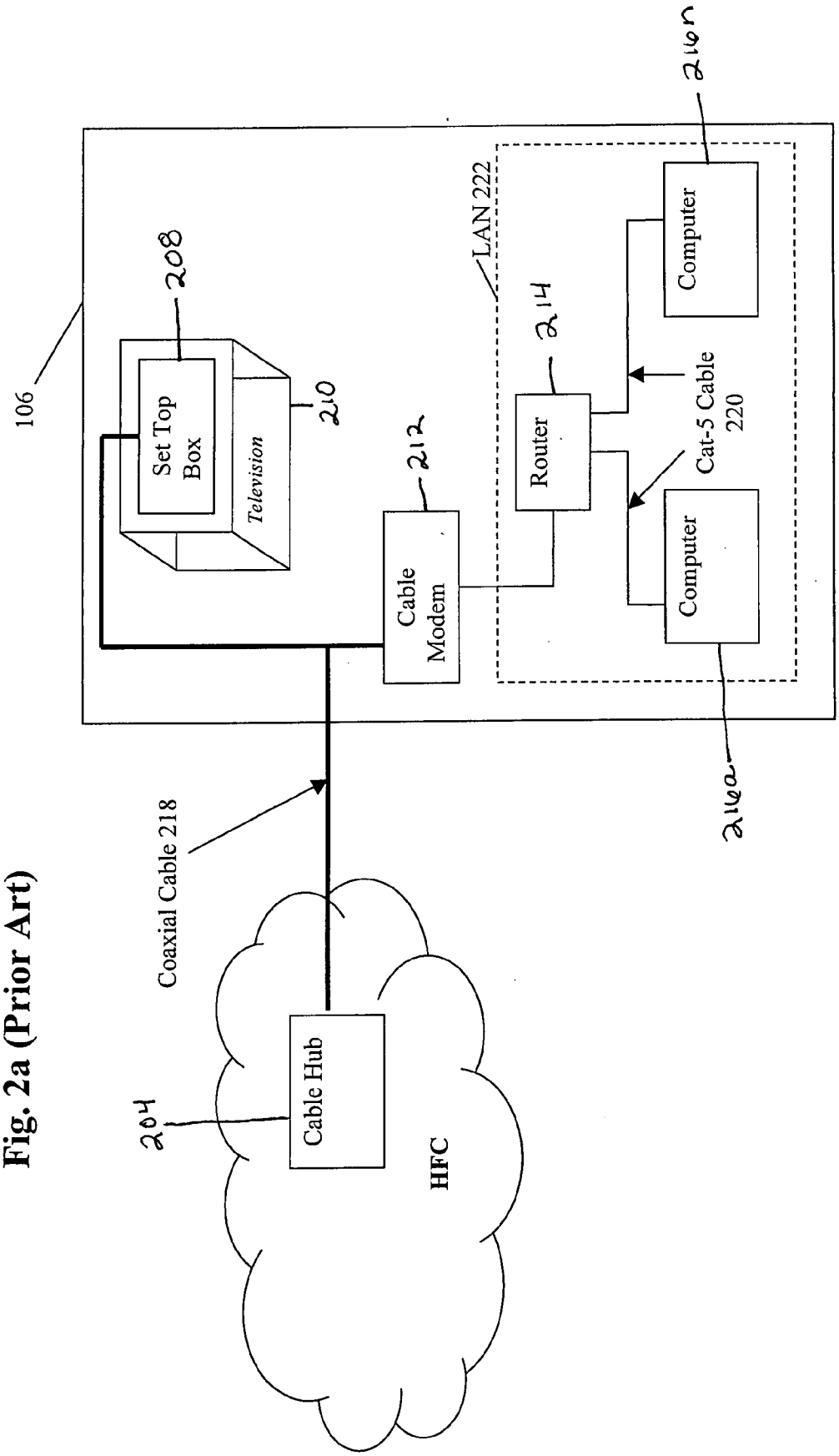


Fig. 2a (Prior Art)

Fig. 2b

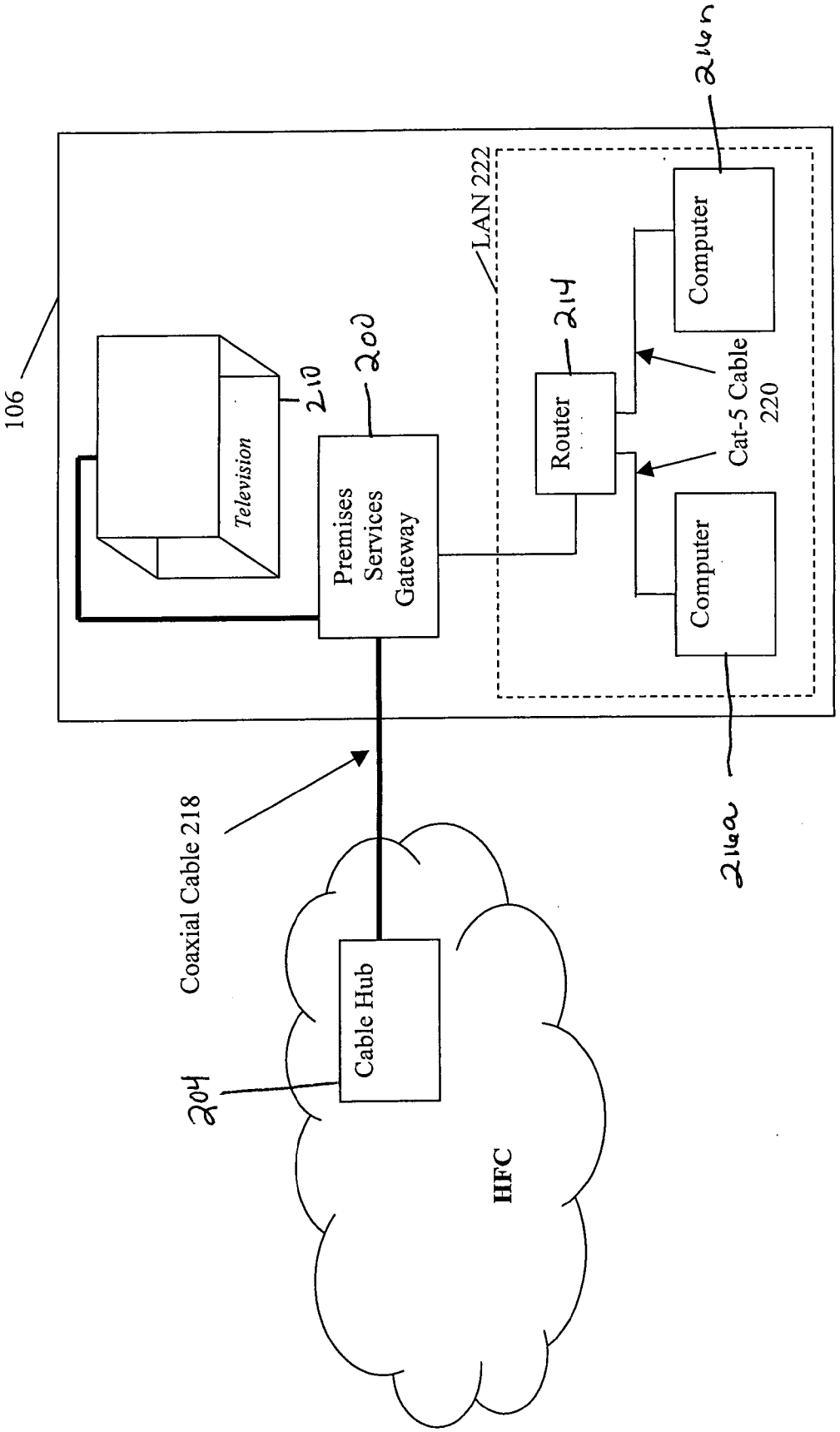
106
Television
210
200
Premises Services Gateway
LAN 222
214
Router
Computer
216n
Cat-5 Cable 220
Computer
216a
Coaxial Cable 218
Cable Hub
204
HFC

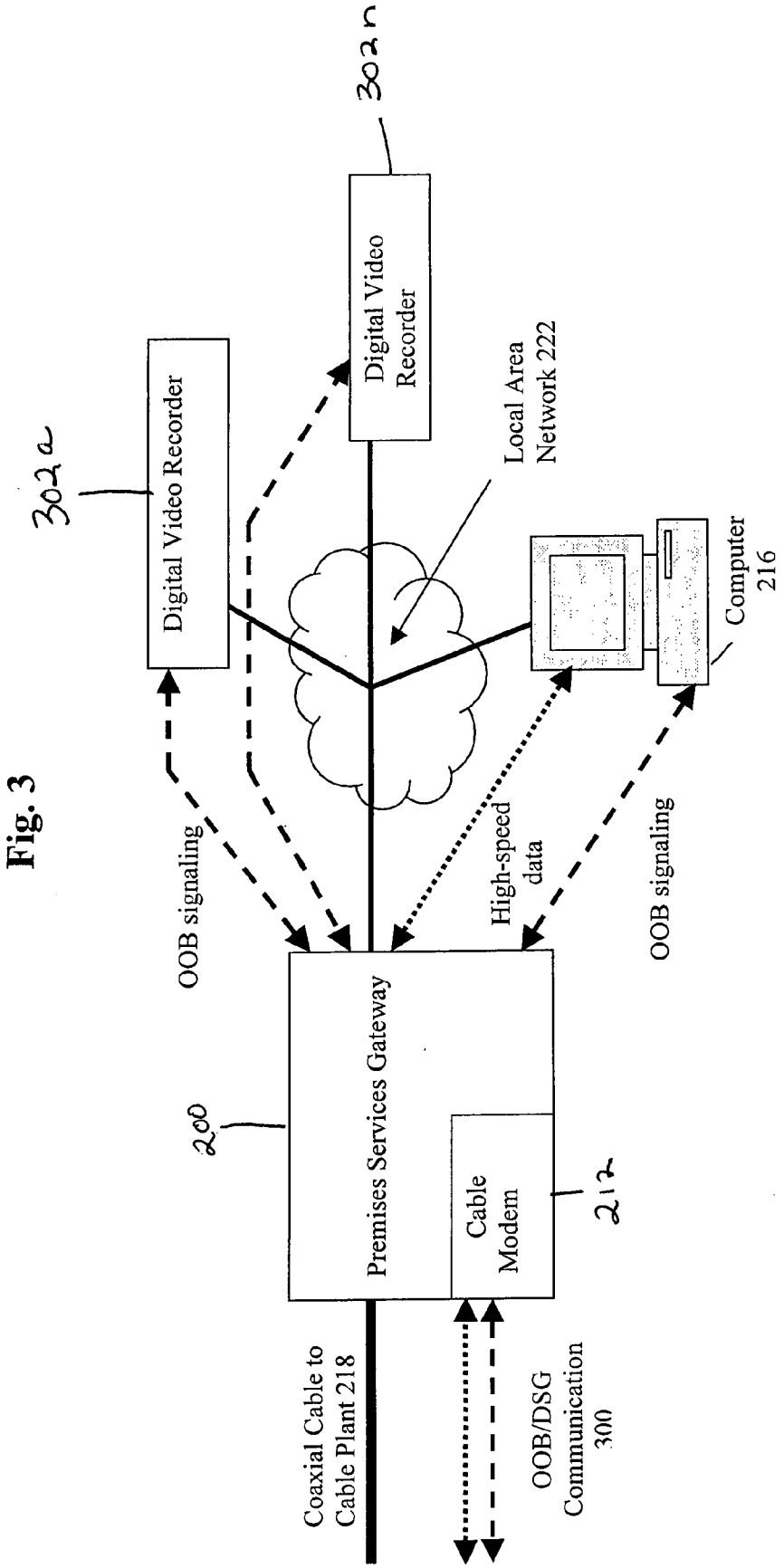
302n
Digital Video Recorder
302a
Digital Video Recorder
Local Area Network 222
Computer 216
OOB signaling
High-speed data
OOB signaling
200
Premises Services Gateway
Cable Modem
212
Coaxial Cable to Cable Plant 218
OOB/DSG Communication 300

Fig. 3

Fig. 4

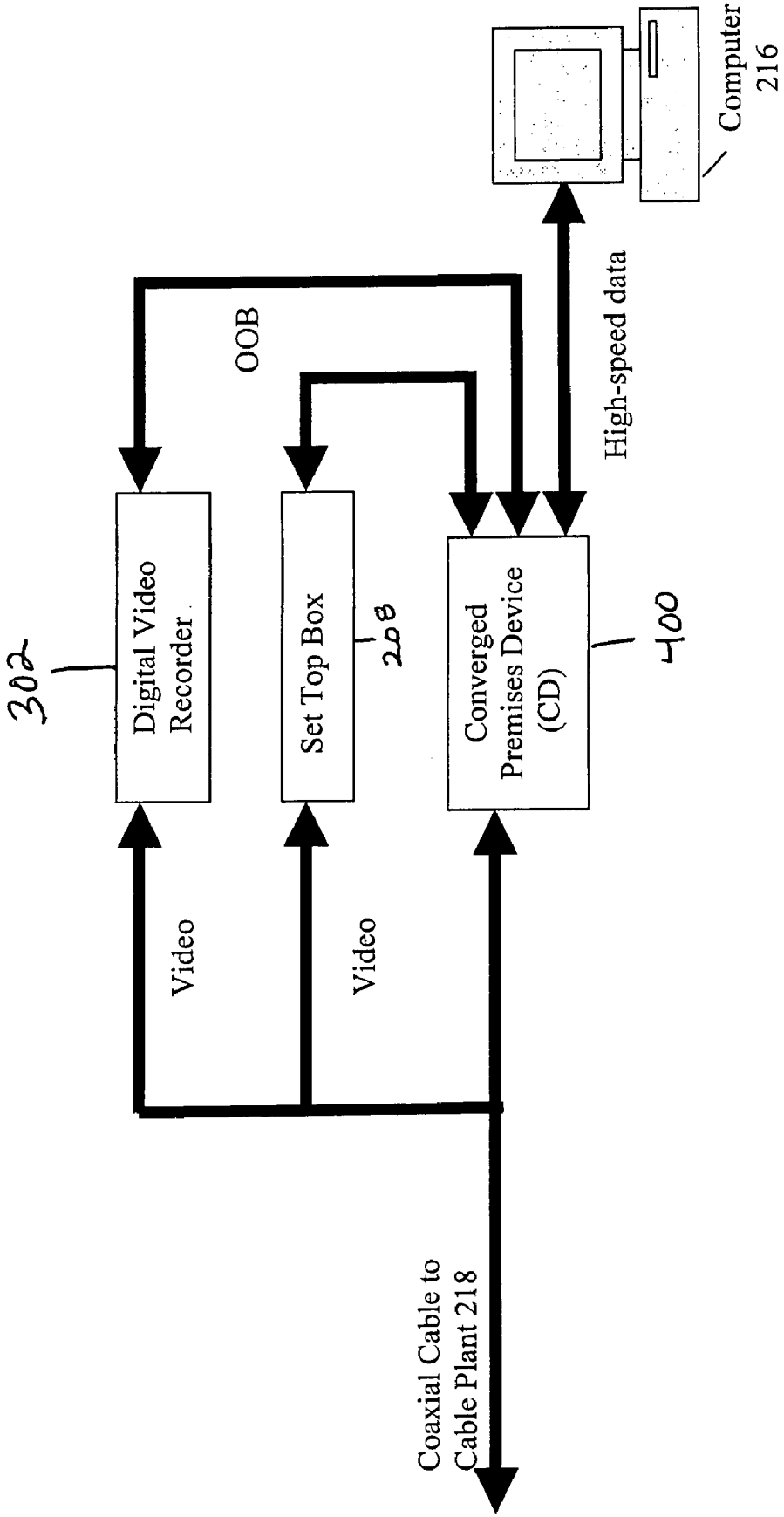
302
Digital Video Recorder
Set Top Box
208
Converged Premises Device (CD)
400
Computer 216
OOB
High-speed data
Video
Video
Coaxial Cable to Cable Plant 218

Fig. 5

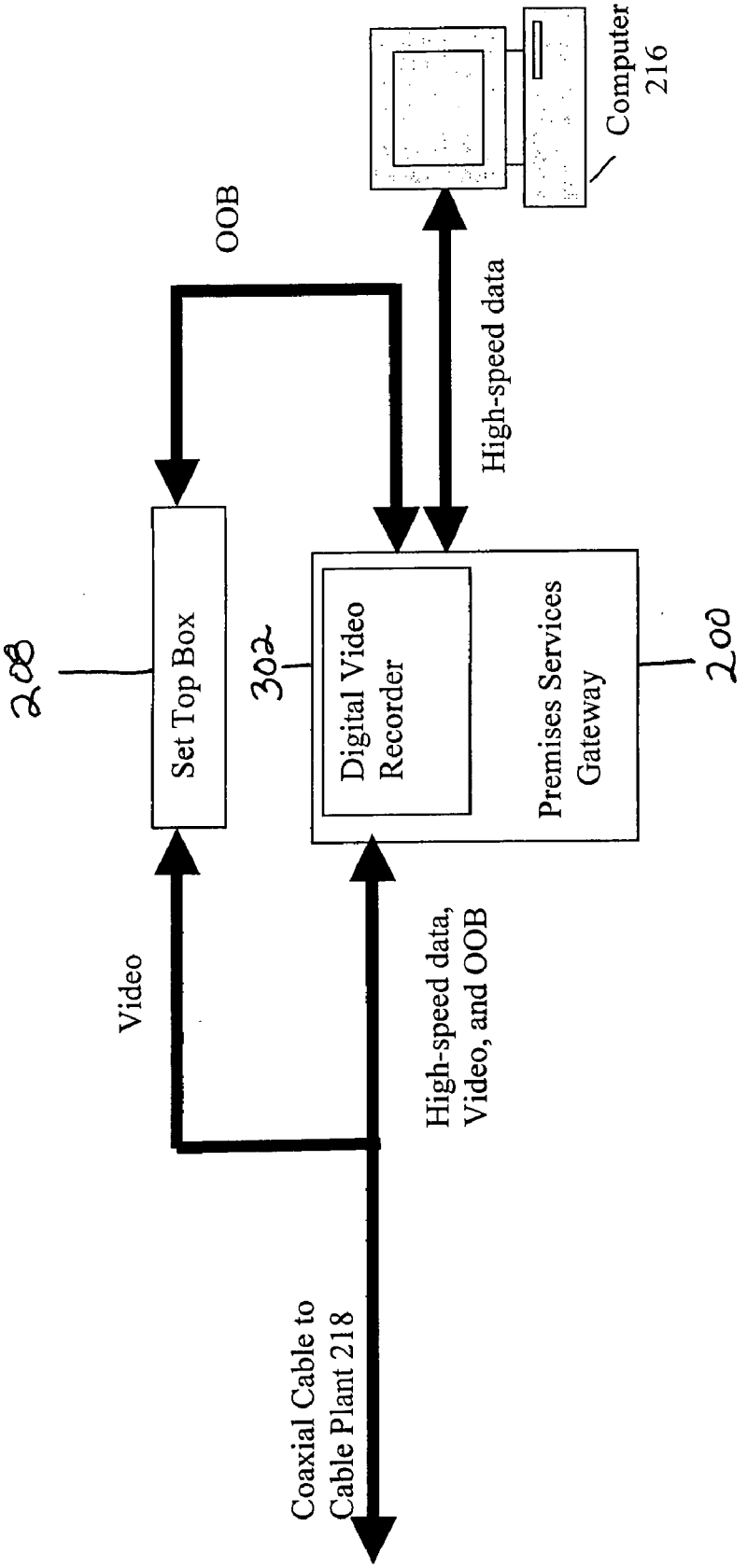
208
Set Top Box
302
Digital Video Recorder
Premises Services Gateway
200
Video
OOB
High-speed data
High-speed data, Video, and OOB
Coaxial Cable to Cable Plant 218
Computer 216

Fig. 6

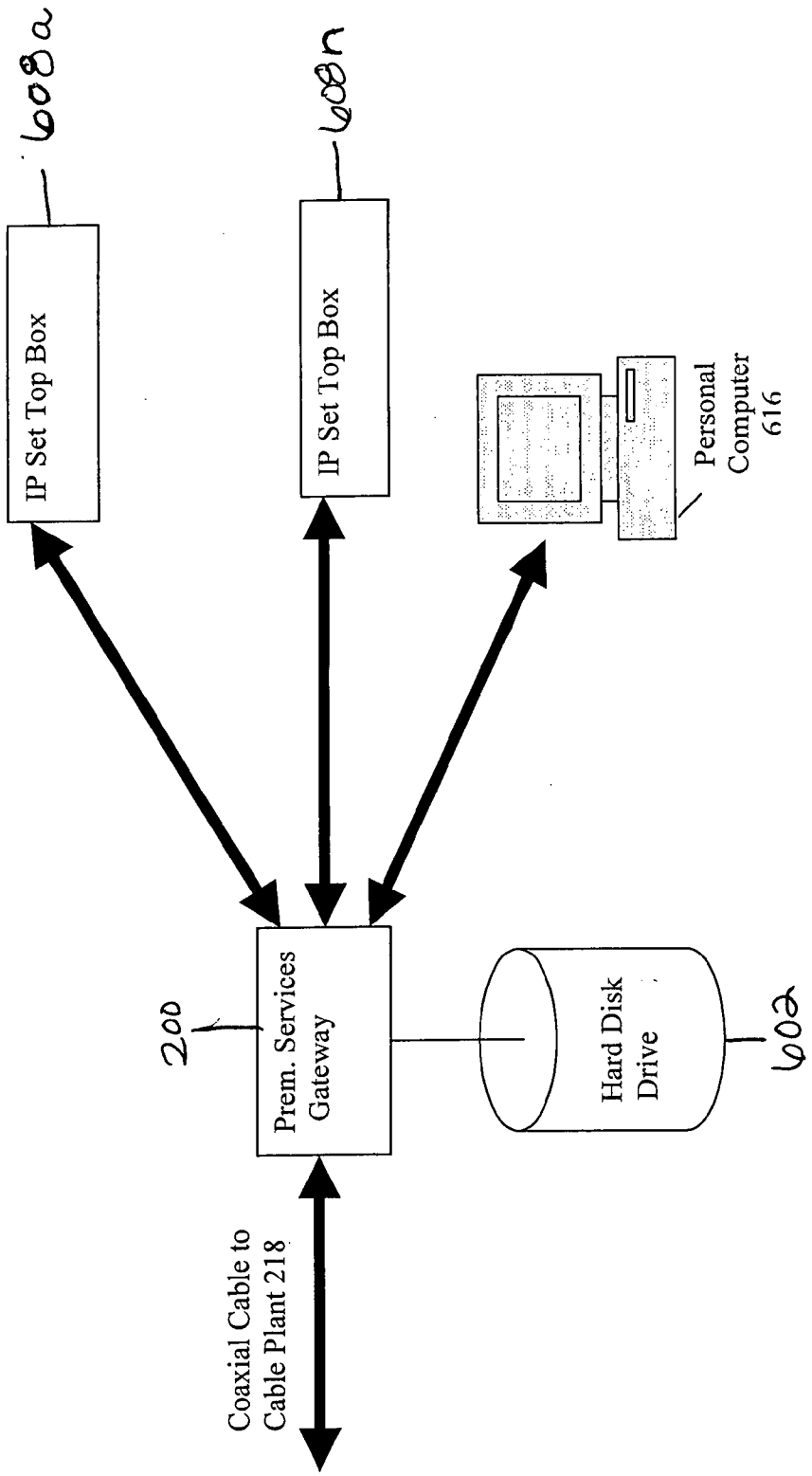
608a
IP Set Top Box
608n
IP Set Top Box
Personal Computer 616
200
Prem. Services Gateway
Hard Disk Drive
602
Coaxial Cable to Cable Plant 218

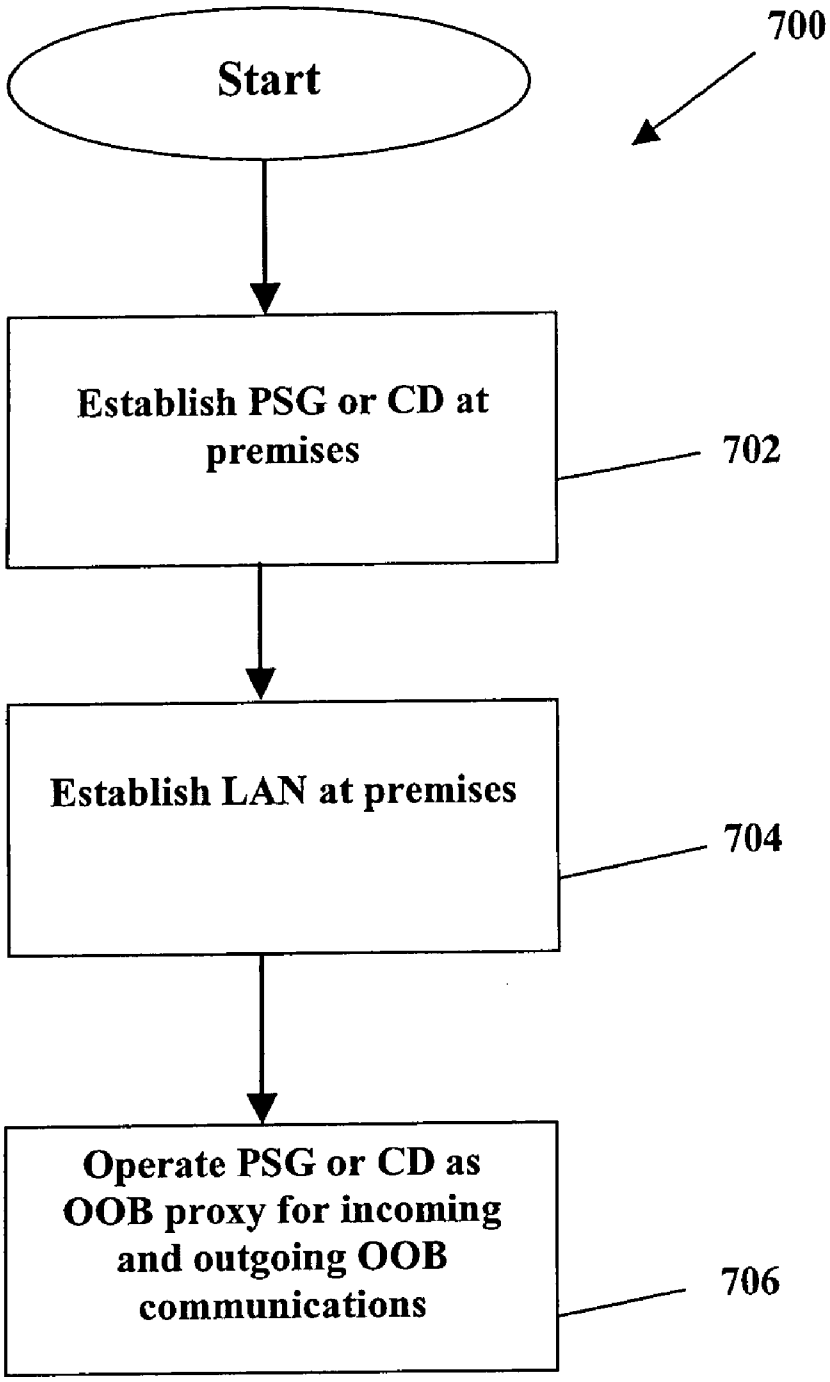
700
Start
Establish PSG or CD at premises
702
Establish LAN at premises
704
Operate PSG or CD as OOB proxy for incoming and outgoing OOB communications
706

Fig. 7

Fig. 8

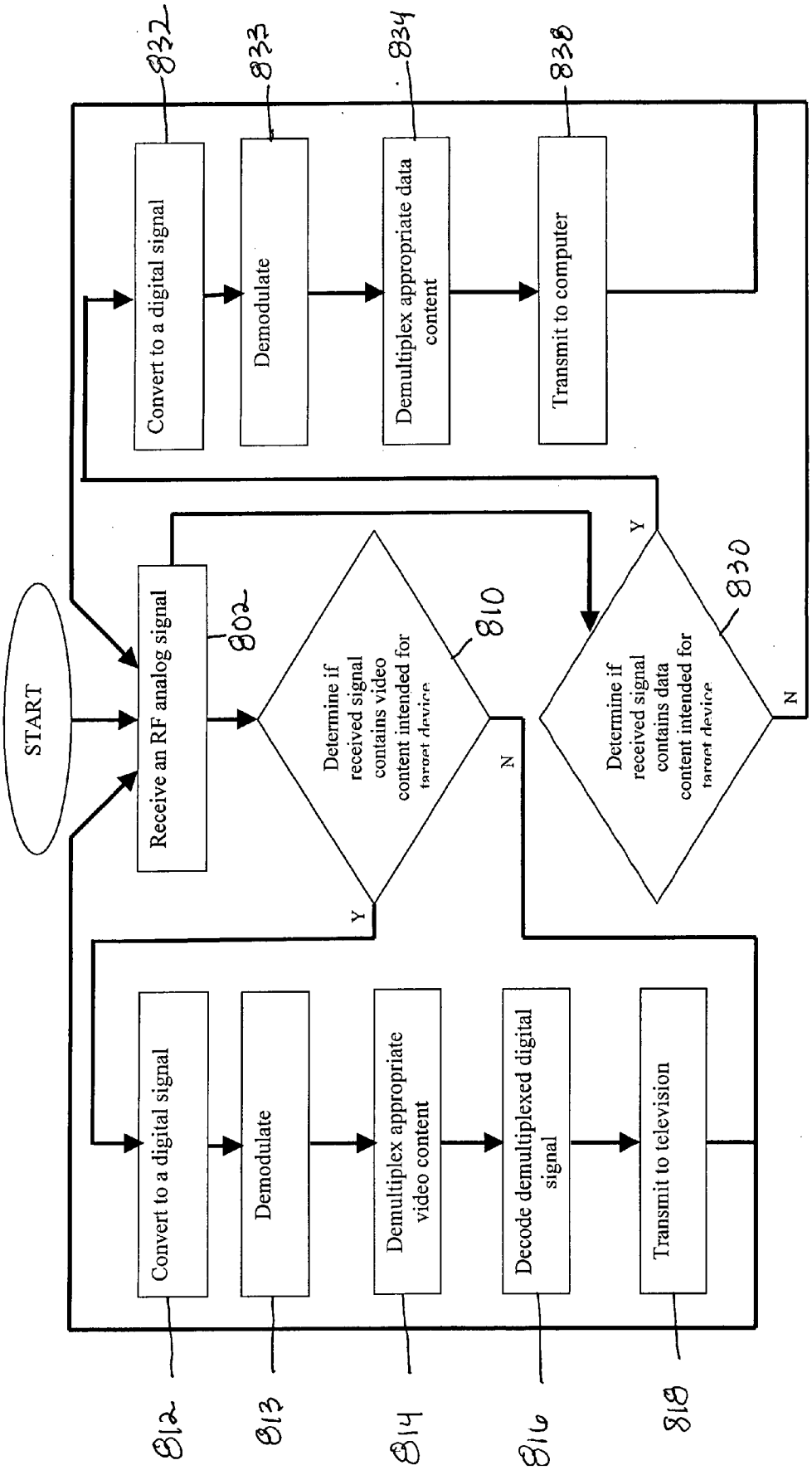
START
Receive an RF analog signal
802
Determine if received signal contains video content intended for target device
810
Y
N
Convert to a digital signal
Demodulate
Demultiplex appropriate video content
Decode demultiplexed digital signal
Transmit to television
812
813
814
816
818
Determine if received signal contains data content intended for target device
830
Y
N
Convert to a digital signal
Demodulate
Demultiplex appropriate data content
Transmit to computer
832
833
834
836

Fig. 8a

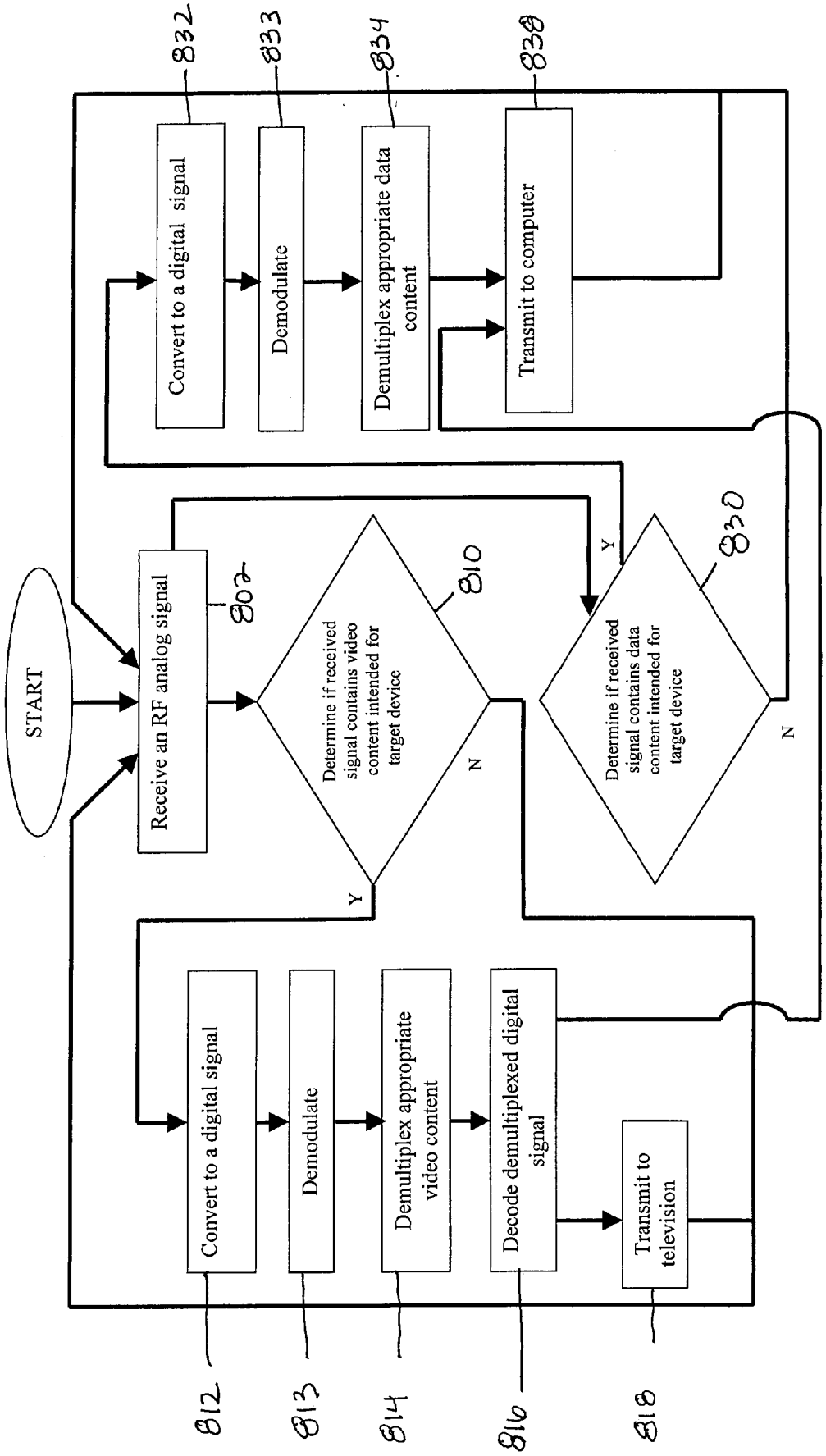
START
Receive an RF analog signal
802
Determine if received signal contains video content intended for target device
810
Y
N
Determine if received signal contains data content intended for target device
830
Y
N
Convert to a digital signal
Demodulate
Demultiplex appropriate video content
Decode demultiplexed digital signal
Transmit to television
Convert to a digital signal
Demodulate
Demultiplex appropriate data content
Transmit to computer
812
813
814
816
818
832
833
834
838

Fig. 9

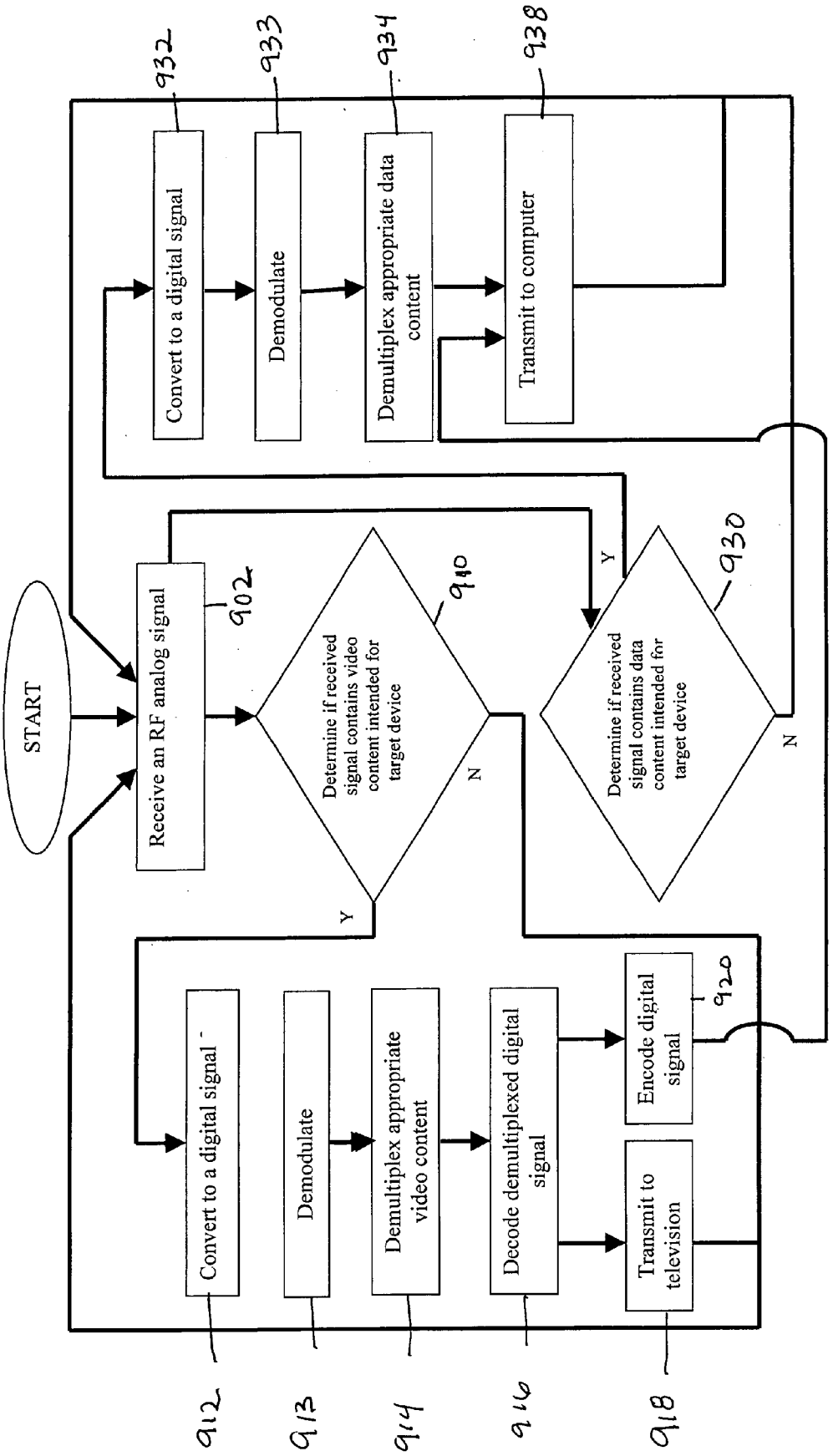
START
Receive an RF analog signal
902
Determine if received signal contains video content intended for target device
910
Y
N
Determine if received signal contains data content intended for target device
930
Y
N
Convert to a digital signal
932
Demodulate
933
Demultiplex appropriate data content
934
Transmit to computer
938
Convert to a digital signal
912
Demodulate
913
Demultiplex appropriate video content
914
Decode demultiplexed digital signal
916
Encode digital signal
920
Transmit to television
918

Fig. 10

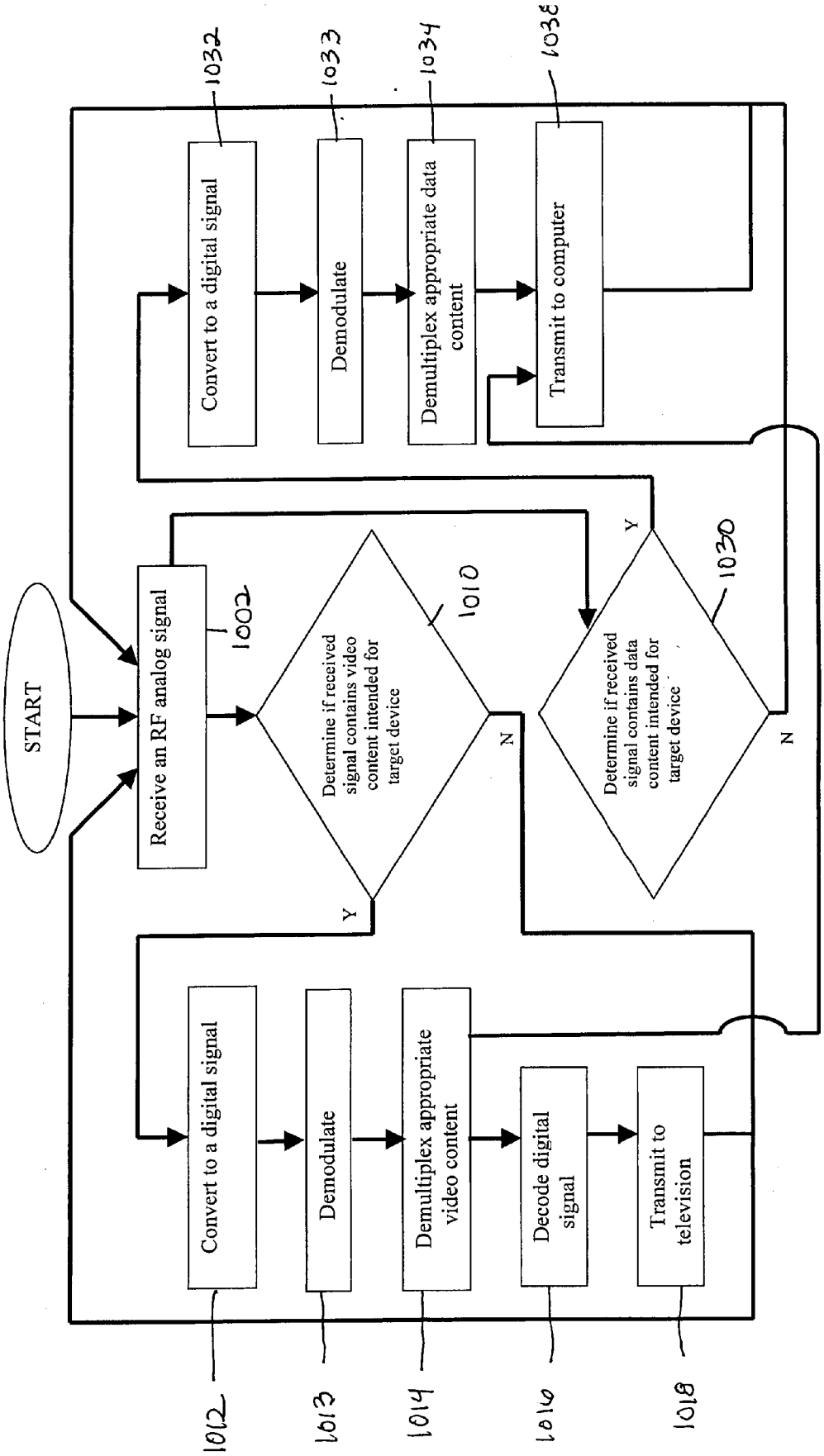
START
Receive an RF analog signal
1002
Determine if received signal contains video content intended for target device
1010
Y
N
Determine if received signal contains data content intended for target device
1030
Y
N
Convert to a digital signal
1012
Demodulate
1013
Demultiplex appropriate video content
1014
Decode digital signal
1016
Transmit to television
1018
Convert to a digital signal
1032
Demodulate
1033
Demultiplex appropriate data content
1034
Transmit to computer
1036

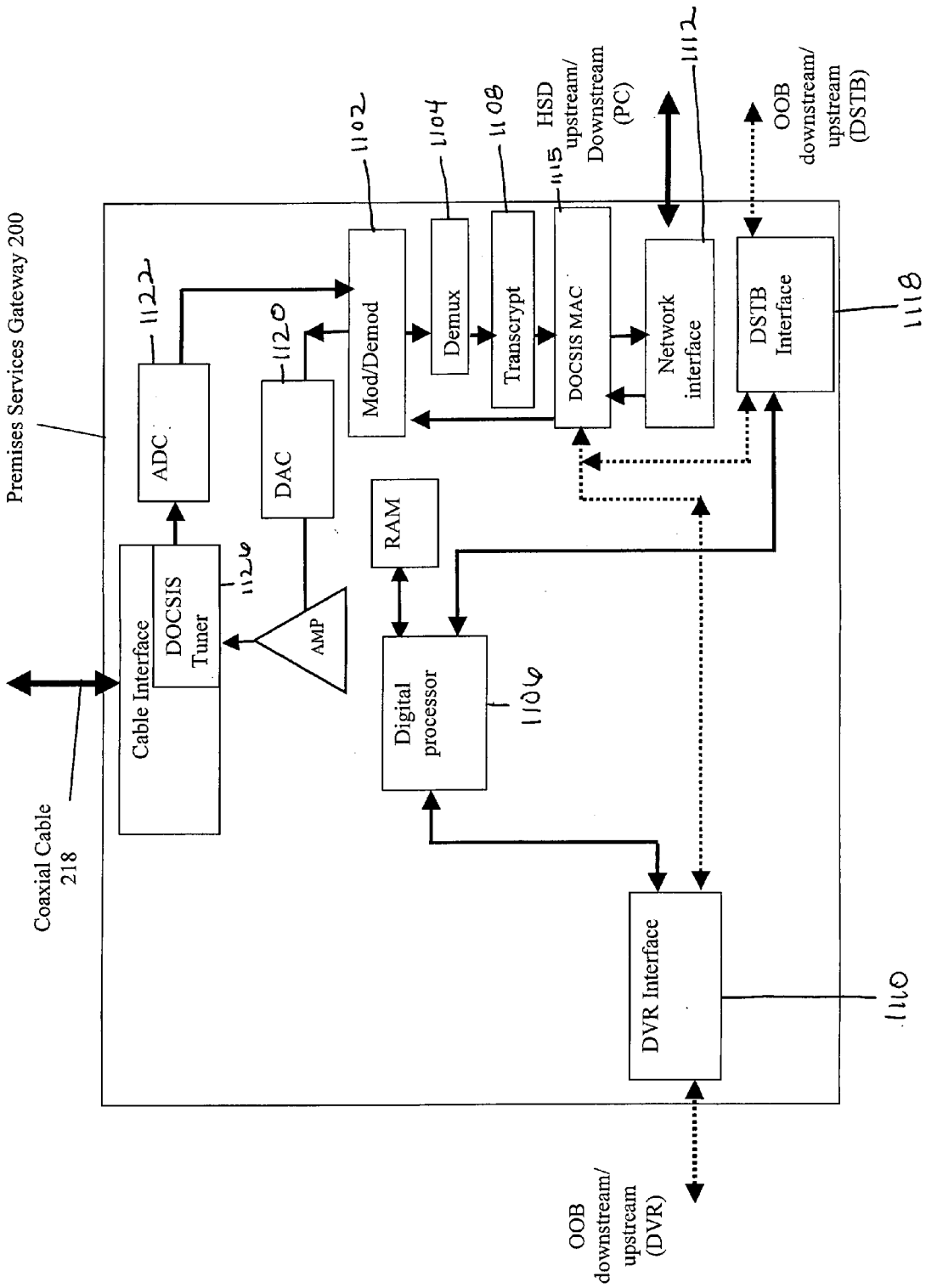
Premises Services Gateway 200
Coaxial Cable 218
Cable Interface
DOCSIS Tuner
1126
ADC
1122
AMP
DAC
1120
Mod/Demod
1102
Demux
1104
Transcrypt
1108
DOCSIS MAC
1115
HSD upstream/ Downstream (PC)
Network interface
1112
DSTB Interface
1118
OOB downstream/ upstream (DSTB)
RAM
Digital processor
1106
DVR Interface
1110
OOB downstream/ upstream (DVR)

Fig. 11

Fig. 12

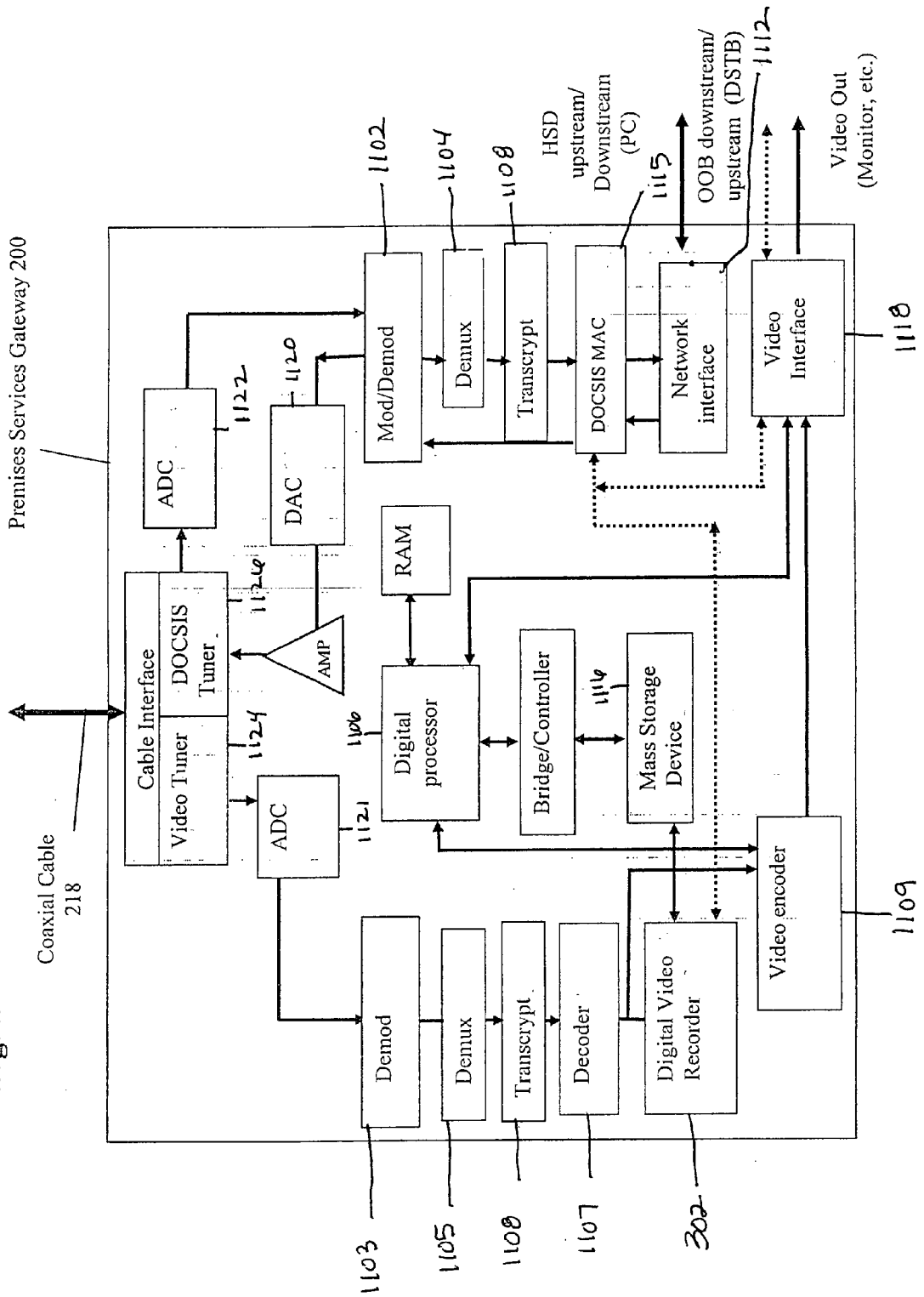
Premises Services Gateway 200
Coaxial Cable 218
Cable Interface
Video Tuner
DOCSIS Tuner
ADC
DAC
AMP
ADC
Mod/Demod
Demux
Transcrypt
DOCSIS MAC
Network interface
Video Interface
RAM
Digital processor
Bridge/Controller
Mass Storage Device
Video encoder
Demod
Demux
Transcrypt
Decoder
Digital Video Recorder
HSD upstream/ Downstream (PC)
OOB downstream/ upstream (DSTB)
Video Out (Monitor, etc.)
1102
1104
1108
1115
1112
1118
1122
1120
1126
1124
1121
1106
1116
1109
1103
1105
1108
1107
302

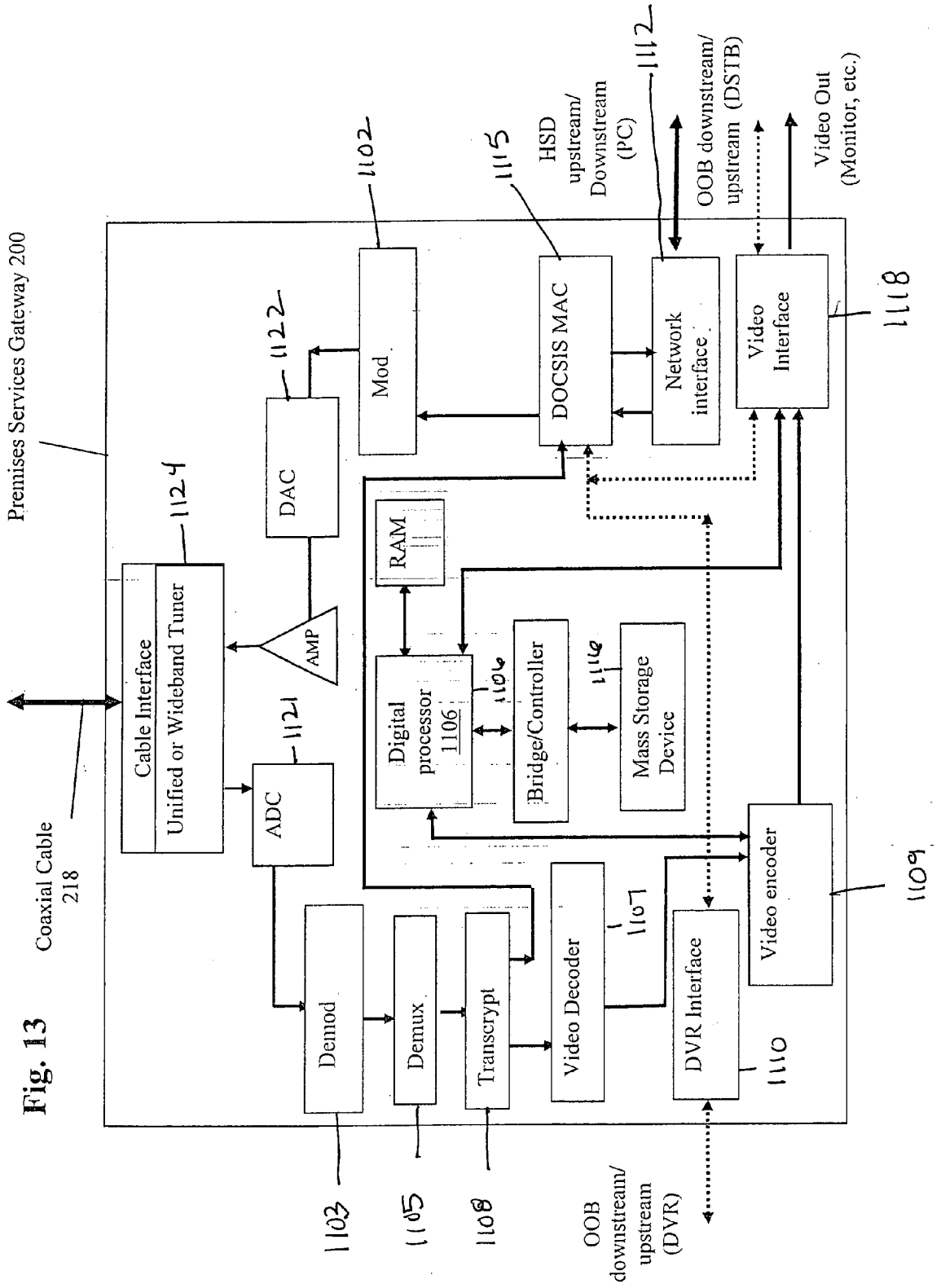
Premises Services Gateway 200
Coaxial Cable 218
Cable Interface
Unified or Wideband Tuner
1124
AMP
DAC
1122
Mod
1102
ADC
1121
Demod
1103
Demux
1105
Transcrypt
1108
Digital processor 1106
1106
RAM
Bridge/Controller
1116
Mass Storage Device
DOCSIS MAC
1115
HSD upstream/ Downstream (PC)
Network interface
1112
OOB downstream/ upstream (DSTB)
Video Interface
1118
Video Out (Monitor, etc.)
Video Decoder
1107
DVR Interface
1110
OOB downstream/ upstream (DVR)
Video encoder
1109

Fig. 13

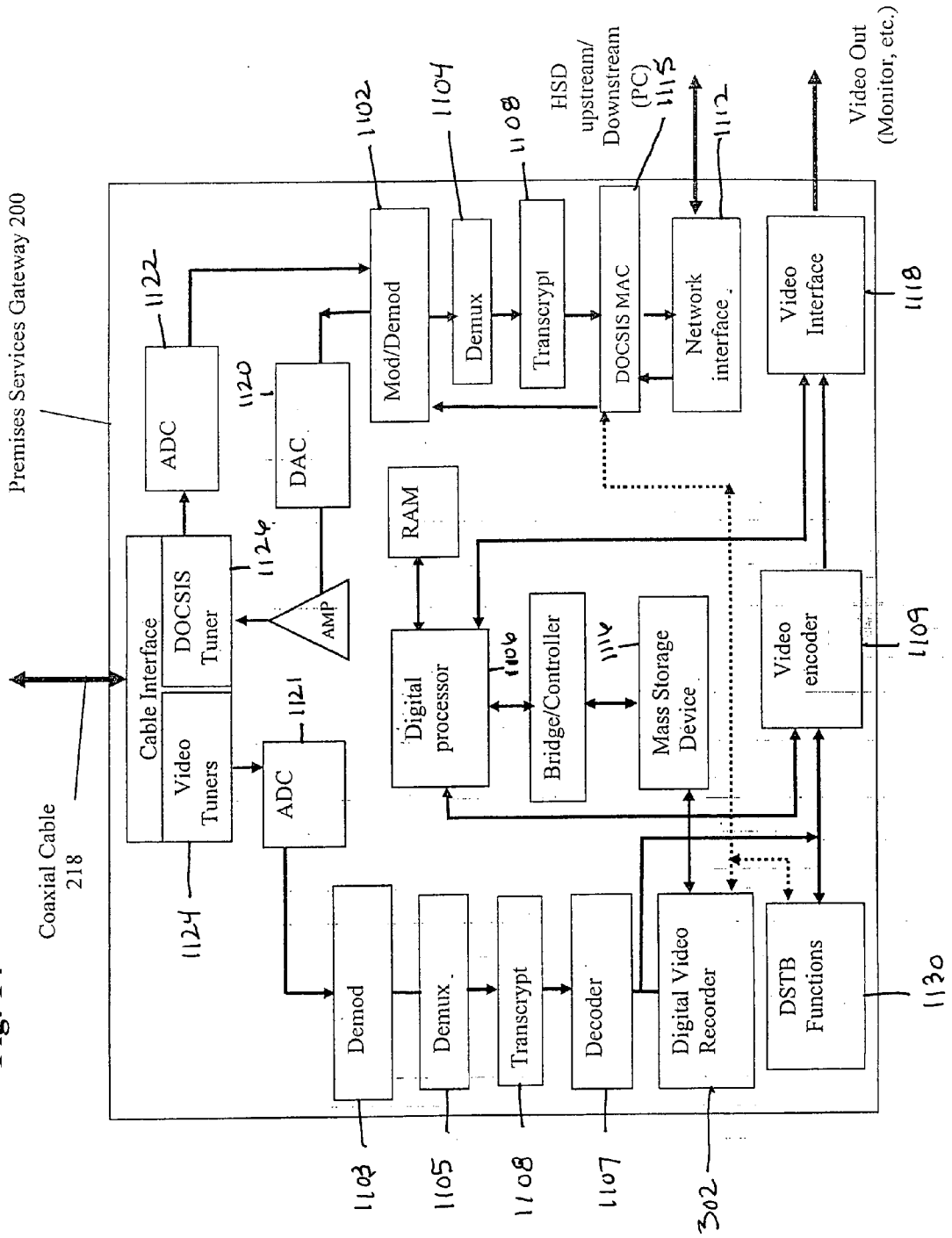
Premises Services Gateway 200
Coaxial Cable 218
Cable Interface
DOCSIS Tuner
Video Tuners
ADC
DAC
AMP
ADC
Mod/Demod
Demux
Transcrypt
DOCSIS MAC
Network interface
Video Interface
RAM
Digital processor
Bridge/Controller
Mass Storage Device
Video encoder
Demod
Demux
Transcrypt
Decoder
Digital Video Recorder
DSTB Functions
HSD upstream/ Downstream (PC)
Video Out (Monitor, etc.)
1122
1120
1124
1124
1121
1102
1104
1108
1115
1112
1118
1109
1106
1116
1130
1103
1105
1108
1107
302

Fig. 14

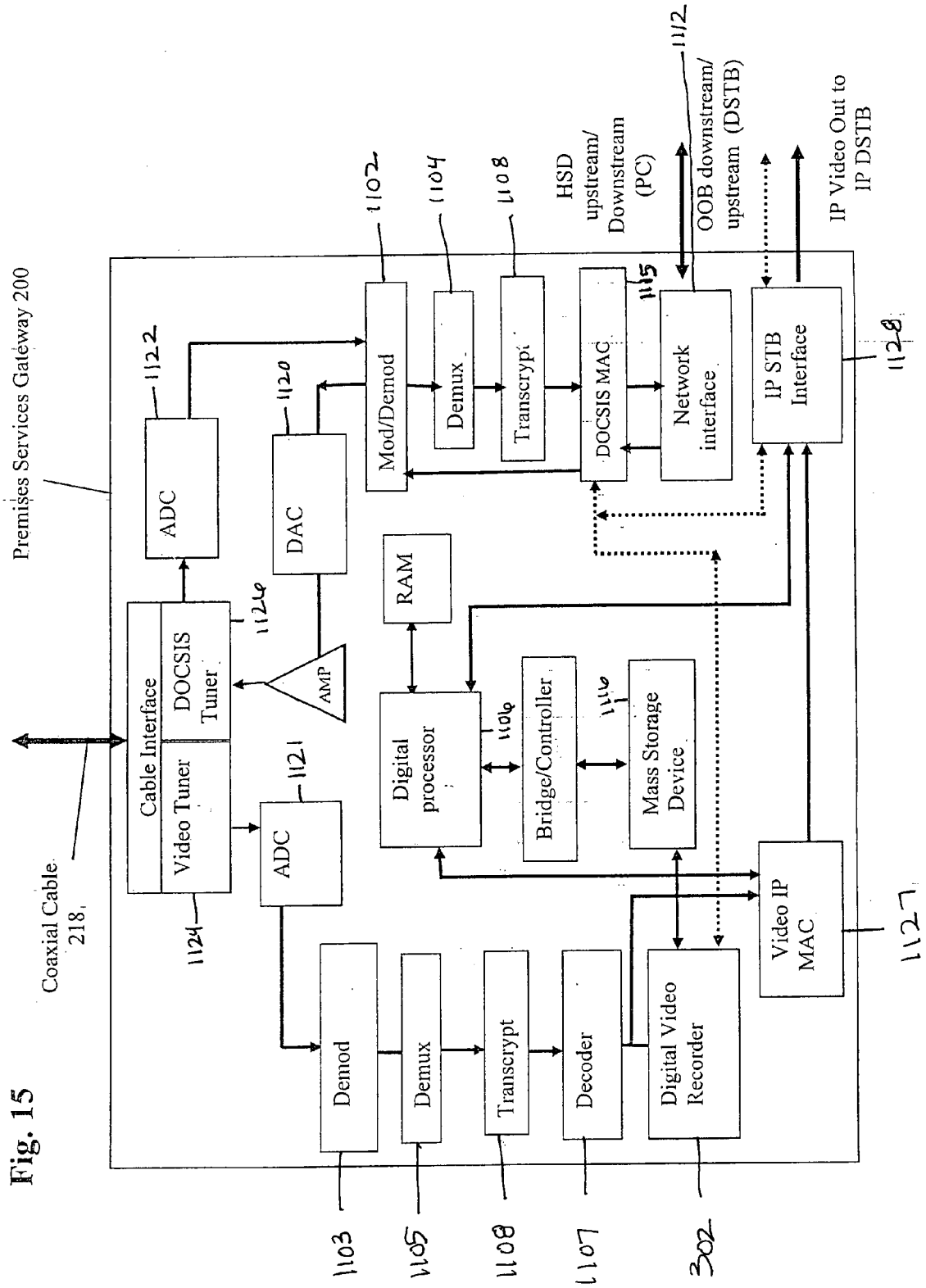
Premises Services Gateway 200
Coaxial Cable 218
Cable Interface
Video Tuner
DOCSIS Tuner
1124
1126
ADC
1122
DAC
1120
AMP
ADC
1121
Mod/Demod
1102
Demux
1104
Transcrypt
1108
DOCSIS MAC
1115
Network interface
HSD upstream/ Downstream (PC)
OOB downstream/ upstream (DSTB)
1112
IP STB Interface
1128
IP Video Out to IP DSTB
RAM
Digital processor
1106
Bridge/Controller
1116
Mass Storage Device
Video IP MAC
1127
Demod
Demux
Transcrypt
Decoder
Digital Video Recorder
1103
1105
1108
1107
302

Fig. 15

# PREMISES GATEWAY APPARATUS AND METHODS FOR USE IN A CONTENT-BASED NETWORK

## COPYRIGHT

**[0001]** A portion of the disclosure of this patent document contains material that is subject to copyright protection. The copyright owner has no objection to the facsimile reproduction by anyone of the patent document or the patent disclosure, as it appears in the Patent and Trademark Office patent files or records, but otherwise reserves all copyright rights whatsoever.

## BACKGROUND OF THE INVENTION

**[0002]** 1. Field of Invention

**[0003]** The present invention relates generally to the field of content and/or data delivery over a network. More particularly, the present invention is related to apparatus and methods for distributing programming content, media, data and other information services via apparatus disposed on a user premises (e.g., residence, enterprise, etc.).

**[0004]** 2. Description of Related Technology

**[0005]** Recent advances in digital information processing have made a range of services and functions available for delivery to consumers at their premises for very reasonable prices or subscription fees. These services and functions include digital broadcast programming (movies, etc.), digital video-on-demand (VOD), personal video recorder (PVR), Internet Protocol television (IPTV), digital media playback and recording, as well high speed internet access and IP-based telephony (e.g., VoIP). Other services available to network users include access to and recording of digital music (e.g., MP3 files), as well local area networking (including wire-line and wireless local area networks) for distributing these services throughout the user's premises, and beyond.

**[0006]** Currently, in the context of content-based networks, many of these services are provided and delivered to the user via a variety of different equipment environments including, inter alia, cable modems and computers, cable set-top boxes, and digital video recorders (DVRs). This unfortunately presents the user with a somewhat heterogeneous mixture of substantially separate hardware and software environments.

**[0007]** Some improvements in digital service integration have been made over time. For example, cable system subscribers (such as those of the Assignee hereof) can now access VOD, PVR, PPV and broadcast services simultaneously, as well a Internet access via cable modem, and even digital telephony (e.g., VoIP).

**[0008]** A variety of residential or home "gateway" devices for use with cable television networks and that integrate various functions are disclosed in the prior art. For example, U.S. Pat. No. 5,557,319 to Gurusami, et al. issued Sep. 17, 1996 entitled "Subscriber return system for CATV full service networks" discloses a subscriber premise local bus (SPLB) is connected to a cable drop from a wide-band 2-way network through a gateway device providing frequency conversion and blocking of certain frequencies used in the subscriber premises local bus (SPLB). Service channels to the consumer are provided in a first band such as 54 to 750 MHZ, carried unchanged over the SPLB. Return signals from the subscriber are generated at subscriber devices, such as TV, computers, etc. at, or are up-converted to, signals in a higher frequency band, such as 900 to 950 Mhz, for transmission on the SPLB to the gateway device where they are down-converted to frequencies below 54 Mhz for transmission over the network. A band-pass or other filter may block at least some of the lower frequencies from carrying over from the SPLB to the cable drop or 2-way network.

**[0009]** U.S. Pat. No. 6,317,884 to Eames, et al. issued Nov. 13, 2001 entitled "Video, data and telephony gateway" discloses a residential gateway for distributing video, data and telephony services. The gateway has a MPEG bus connected from a network interface module to a first and a second video processors. A microprocessor controls the first and second video processors by sending control signals across a control bus.

**[0010]** U.S. Pat. No. 6,396,531 to Gerszberg, et al. issued May 28, 2002 entitled "Set top integrated visionphone user interface having multiple menu hierarchies" discloses a system architecture for bypassing a local exchange carrier that comprises an intelligent terminal, a residential gateway coupled to the terminal, a cable facility management platform terminating a twisted pair or coaxial cable facility and a network service platform. The platform serves both a cable headend and a telephone DSL network to enable a single service provider to provide different information content services independent of how a user actually receives the services. The integrated residence gateway is coupled to either or both of the coaxial cable or twisted pair and distributes the bandwidth facilities available over either service vehicle to customer devices including the set top box.

**[0011]** U.S. Pat. No. 6,546,016 to Gerszberg, et al. issued Apr. 8, 2003 entitled "Coaxial cable/twisted pair cable telecommunications network architecture" discloses a system architecture for bypassing a local exchange carrier comprises an intelligent terminal, a residential gateway coupled to the terminal, a cable facility management platform terminating a twisted pair or coaxial cable facility and a network service platform. The twisted pair and/or coaxial cable fed, integrated residence gateway controlled intelligent terminal or set-top device provides a plurality of enhanced services. One necessary service is lifeline service which may be provided over the coaxial cable via a cable modem of the integrated residence gateway, over the twisted pair facility or via wireless means. The integrated residence gateway is coupled to either or both of the coaxial cable or twisted pair and distributes the bandwidth facilities available over either service vehicle to customer devices including the set top box.

**[0012]** U.S. Pat. No. 6,711,742 to Kishi, et al. issued Mar. 23, 2004 entitled "Cable modem system using CATV transmission path" discloses a cable modem system prevents an up-link noise from entering a cable so as to efficiently use the bandwidth of a CATV transmission path. The cable modem system performs data communication using the transmission path of a cable television system which includes a cable television station apparatus and a plurality of subscriber units connected to each other by the transmission path. A gateway apparatus receives an original data signal supplied by one of the subscriber units via a telephone network. The gateway apparatus converts the original data signal into a converted data signal so that the converted data signal complies with a protocol corresponding to a destination address included in the original data signal. The gateway apparatus sends the converted data signal to the cable television station apparatus via the transmission path. A line end terminal unit is provided in the cable television station apparatus so as to receive the

converted data signal sent from the gateway apparatus. The line end terminal unit restores the converted data signal to the original data signal.

**[0013]** U.S. Pat. No. 6,931,018 to Fisher issued Aug. 16, 2005 entitled "Local network router and method of routing IP data packets" discloses a local network router that learns to route IP traffic among customer premises equipment on a local network rather than permitting the IP traffic to be routed through a broadband cable network and selected internet service provider (ISP) to the internet. The local network router dynamically generates a routing table from address resolution protocol (ARP) packets exchanged between the CPE and the external network. For each IP data packet received from a CPE that is destined for another local CPE, the local network router replaces a default gateway with the destination CPE. Accordingly, network resources for routing traffic are significantly reduced.

**[0014]** U.S. Pat. No. 6,978,474 to Sheppard, et al. issued Dec. 20, 2005 entitled "Media interface device" discloses a Residential Gateway (RG) for distributing video, data and telephone services to multiple devices within a residence. The RG receives signals from a telecommunications network, converts the signals to formats compatible with the multiple devices, and transmits the appropriate signals to the appropriate devices. Wireless remote control devices (RCs) associated with remotely located televisions (TVs) transmit channel select commands to the RG as wireless signals. The wireless signals are received by Remote Antennae Packages (RAPs) coupled to the remotely located TVs. The RAPs transmit the wireless signals over coaxial cable to a Media Interface Device (MID) coupled to the RG. The MID extracts the channel select commands and forwards them to the RG. The MID is also capable of combining and splitting TV signals, and adjusting the impedance of network signals so that they can be transmitted over the coaxial cable.

**[0015]** United States Patent Application Publication No. 20010030950 to Chen, et al. published Oct. 18, 2001 entitled "Broadband communications access device" discloses an integrated phone-based home gateway system. The integrated phone-based home gateway system includes a broadband communication device, such as digital subscriber line ("DSL") device, an analog modem, and a wireless interface, integrated into a screen-phone for providing broadband communication service to home users. Multiple home users are able to access the Internet and the content services for conducting e-commerce, receiving content news, entertaining on-demand, making audio or video communications, and telecommuting or working at home. This screen-phone based, modular, plug-n-play home gateway interface allows in-home as well as to-home networking, provides automatic data and broadband initialization, configuration and service provisioning, routing and bridging functionality and allows resource sharing among home devices via the existing phone wire, wireless, coaxial or optical cable connections.

**[0016]** United States Patent Application Publication No. 20050055729 to Atad, et al. published Mar. 10, 2005 entitled "Video broadcasting with return channel" discloses a TV broadcasting system that comprises: an outward broadcast link to reach each of a plurality of user receiver installations via satellite or via a terrestrial channel, and a return link from each of said plurality of users, said return channel being a terrestrial channel via a wide area network, typically a WAN, of which WAN said user receiver installations form a node. The WAN may also support an uplink. A satellite or terrestrial receiver installation is modified with an extra terrestrial antenna for the WAN and a splitter combiner allows the already installed cable link to the TV receiver to be retained. A residential gateway allows a household LAN and communication enabled devices to be supported via the TV/WAN infrastructure.

**[0017]** United States Patent Application Publication No. 20050165899 to Mazzola published Jul. 28, 2005 entitled "Provisioning quality of service in home networks using a proxy interface" discloses a home gateway and interface system and method for providing quality of service to a home LAN device on a home network that is not QoS capable. The gateway comprises a modem (e.g., cable, DSL modem) and a portal service proxy interface. The modem is connected between the home network and a WAN cable network, and is operable to bridge traffic between the home LAN of the home network and the WAN cable network. The portal service interface is connected to the modem and is utilized as a proxy for QoS reservations and data communications between the home LAN devices on the home network. The portal interface acts on behalf of a client to make requests of the non-QoS capable home LAN devices and communicate these QoS needs to the QoS capable devices.

**[0018]** United States Patent Application Publication No. 20060041915 to Dimitrova, et al. published Feb. 23, 2006 entitled "Residential gateway system having a handheld controller with a display for displaying video signals" discloses a residential gateway system that includes a residential gateway to which a plurality of video and audio signal recording and reproducing devices, video and audio sources, including satellite, cable, Internet, are connected, and including a handheld controller for communicating with and controlling the residential gateway. The handheld controller has a display screen for displaying icons for controlling the residential gateway, and for displaying video signals from the residential gateway. Since the display capabilities of the display screen of the handheld controller are limited, the residential gateway includes a transcoder for transcoding video signals for transmission to the handheld controller such that the transmitted video signals may be displayed in their entirety on the display screen of the handheld controller. By transcoding the video signals prior to transmission, valuable bandwidth of the network channel connecting the handheld controller to the residential gateway is save for the transmission of other information and signals.

**[0019]** United States Patent Application Publication No. 20060136968 to Han, et al. published Jun. 22, 2006 entitled "Apparatus for distributing same/different digital broadcasting streams in heterogeneous home network and method thereof" discloses an apparatus for distributing same/different digital broadcasting streams in a heterogeneous home network and a method thereof. The apparatus includes a home gateway, and a home server, connected to the home gateway through Ethernet and also connected to a PC, a second IP STB, a 1394 STB, an HAS (Home Auto System) and an HDTV receiver, for outputting a ground-wave broadcast, a satellite broadcast and a cable broadcast to their HDTV receivers, respectively, through the second IP STB and the 1394 STB if the ground-wave broadcast, the satellite broadcast and the cable broadcast are received through coaxial cables, interworking with the HAS in order to control home appliances, and directly outputting the broadcast to the HDTV receiver through a built-in STB function. According to the apparatus, a user having a plurality of HDTV receivers at

home can simultaneously view a plurality of HDTV broadcasts irrespective of the broadcasting systems when a plurality of heterogeneous home networks match through a home network matching device.

**[0020]** However, despite the foregoing variety of prior art "gateway" configurations, the various supported functions are still substantially disparate in terms of their hardware and software environments. This is particularly true in extant cable television installations, wherein the user must have a separate cable modem, set-top box, VoIP telephony unit, PC, etc. to perform these differing functions. "Cross-over" between the environments (e.g., moving content or data from one environment to the other) is often quite limited as well due to either hardware/software incompatibilities, conditional access or digital rights management (DRM) constraints, and the like.

**[0021]** Moreover, many of the aforementioned device architectures typically leverage a number of costly and in some cases duplicative technologies. This adds cost not only for the consumer (e.g., those buying retail devices), but also to the network operator such as a cable MSO, since they must expend more in outfitting a subscriber with given capabilities than they would otherwise, were less costly and less duplicative technologies used. One salient example of this is the use of multiple tuners and supporting RF front-end components (e.g., modulators/demodulators, DACs/ADCs, etc.) in each separate device; e.g., one or more video tuners, and an OOB tuner, within a given STB or DVR. The OOB tuner is to communicate out-of-band with the headend or another network entity during operation, while the video or in-band tuners allow for reception and decoding of programming. These multiple tuners and supporting RF and processing components add significant cost to a device.

**[0022]** Hence, there is a need to reduce the capital cost to both network operators and customers related to deployment of customer premises equipment, while at the same time preserving current services and features, and enabling the ready adoption new capabilities in the consumer's premises. Such reduction would ideally be provided through apparatus and methods that would simplify premises equipment and network infrastructure through e.g., unification of one or more functions present within the various equipment environments.

## SUMMARY OF THE INVENTION

**[0023]** The present invention satisfies the foregoing needs by providing, inter alia, improved apparatus and methods for premises content signaling and content delivery.

**[0024]** In accordance with a first aspect of the invention, a gateway device is disclosed. In one embodiment, the gateway device is for use in a content-based network, and comprises: first apparatus adapted to receive first signals transmitted over a first frequency band via the network; second apparatus adapted to receive second signals transmitted over a second frequency band via the network, and transmit third signals over the second band also via the network; and an interface to another premises device. The other premises device utilizes the second apparatus as a communications proxy for transmitting the third signals via the second band that would otherwise have to be transmitted via a separate interface to the network. For example, the other premises device comprises a set-top box having only an in-band tuner, and not capable of communicating over the second frequency band directly.

**[0025]** In one variant, the gateway device further comprises a converged premises device having a cable LAN interface and an Ethernet LAN interface.

**[0026]** In another variant, the gateway device further comprises a digital video recorder, and the another device comprises a set-top box (STB).

**[0027]** In still another variant, the first signals comprise in-band downstream signals received over a coaxial cable, and the second signals comprise downstream data signals also received over the coaxial cable, and the third signals comprise out-of-band upstream signals.

**[0028]** In another embodiment, the gateway device comprises: first apparatus adapted to receive first signals transmitted over a first frequency band via the network, and transmit second signals over the first band also via the network; a first data interface to a first premises device; and a second data interface to a second premises device. The first frequency band comprises a band used for either out-of-band (OOB) signaling or cable modem operation; and the first and second premises devices each utilize the first apparatus as a communications proxy for transmitting the second signals.

**[0029]** In one variant, the content-based network comprises a cable network, and the first premises device comprises a set-top box (STB), and the second device comprises a digital video recorder (DVR). The STB and the DVR comprise only in-band tuners.

**[0030]** In another variant, the first and second premises devices each communicate with the first apparatus using an internet protocol (IP). The first apparatus comprises a DOCSIS compliant cable modem with media access controller (MAC).

**[0031]** In yet another variant, the first premises device comprises a personal computer, and the first interface comprises an Ethernet card.

**[0032]** In still another variant, at least one of the first and second interfaces comprises a coaxial cable interface to a MoCA-compliant local area network (LAN).

**[0033]** In yet a further variant, the gateway device comprises network address translation (NAT) capability, and/or a Dynamic Host Configuration Protocol (DHCP) server.

**[0034]** In another variant, the gateway device comprises a transcoder apparatus adapted to encode a signal encoded according to a first format into a second format different from the first.

**[0035]** In yet another variant, the first and second premises devices comprise IP-enabled devices, and the gateway device is adapted to communicate IP protocol data with the first and second premises devices via the first and second interfaces.

**[0036]** In still a further variant, the gateway device comprises a transcryption apparatus adapted to transcrypt data from a first security environment to a second security environment. The first security environment comprises e.g., a conditional access environment, and the second security environment comprises a digital rights management (DRM) environment.

**[0037]** In a second aspect of the invention, a set-top box apparatus is disclosed. In one embodiment, the apparatus comprises: first apparatus adapted to receive, demodulate, and decode encoded video signals sent via a cable television network; and second apparatus configured to communicate data or signals with a premises device via a communication channel, the premises device being adapted to provide out-of-band (OOB) communication with one or more other entities on the cable television network based at least in part on

the data or signals. The premises device acts as an OOB communication proxy for the set-top box apparatus.

**[0038]** In one variant, the first apparatus comprises an in-band tuner, and the second apparatus comprises an OOB signaling interface.

**[0039]** In another variant, the first apparatus comprises an in-band tuner, and the second apparatus comprises an IP-based media access controller (MAC).

**[0040]** In a third aspect of the invention, a digital video recorder apparatus is disclosed. In one embodiment, the apparatus comprises: first apparatus adapted to receive, demodulate, and decode encoded video signals sent via a cable television network; second apparatus adapted to record the decoded video signals for subsequent playback or transmission; and third apparatus configured to communicate data or signals with a premises device via a communication channel, the premises device being adapted to provide out-of-band (OOB) communication with one or more other entities on the cable television network based at least in part on the data or signals. The premises device acts as an OOB communication proxy for the digital video recorder apparatus.

**[0041]** In one variant, the premises device comprises an out-of-band tuner, and the second apparatus comprises a hard-disk drive, and the apparatus enforces at least one of a trusted domain (TD) or authorized service domain (ASD) content protection policy.

**[0042]** In another variant, the premises device and the digital video recorder comprise a unified form factor.

**[0043]** In yet another variant, the premises device further comprises an interface to a set-top box having only an in-band tuner, the premises device acting as an OOB communication proxy for the set-top box.

**[0044]** In a second embodiment, the DVR comprises an OOB tuner and one or more in-band (e.g., video) tuners for e.g., supporting DVR functions, and acts as an OOB proxy for an associated STB, which only includes an in-band receiver.

**[0045]** In a fourth aspect of the invention, premises gateway apparatus for use with a content-based network is disclosed. In one embodiment, the apparatus comprises: a first tuner adapted to receive first signals in a first frequency band from the network, and obtain first data therefrom; a second tuner adapted to receive second signals in a second frequency band from the network, and obtain second data therefrom; a first interface adapted to format the first data according to a protocol, and distribute the formatted data to at least one first premises device in data communication with the gateway apparatus; and a second interface adapted to at least distribute the second data to at least one second premises device in data communication with the gateway apparatus.

**[0046]** In one variant, the network comprises a cable television network, the first signals are delivered over the network associated with in-band QAMs, and the second signals are delivered over the network associated with out-of-band QAMs. The first interface is adapted to format data packets received via the in-band QAMs according to an internet protocol (IP).

**[0047]** In yet another variant, the second interface comprises a TCP transport layer protocol and an IP network layer protocol, and the at least one second premises device comprises a personal computer.

**[0048]** In still another variant, the at least one first premises device comprises an IP-enabled digital set-top box, and the second tuner apparatus is further adapted to transmit signals in the second frequency band over the network to a distant entity.

**[0049]** In a fifth aspect of the invention, a method of delivering video and data services over a network is disclosed. In one embodiment, the network comprises a cable network, and the method comprises: receiving video and data signals at a gateway device from a common coaxial cable; using at least a first tuner to extract the video signals; using at least a second tuner to extract the data signals; processing the video signals according to a network layer protocol to produce a plurality of protocol packets; and delivering the protocol packets to a packet-enabled client device for viewing, the packet-enabled device being in data communication with the gateway device.

**[0050]** In one variant, the method further comprises delivering the data signals to a computerized device in data communication with the gateway device, and the network layer protocol comprises the Internet Protocol (IP).

**[0051]** In another variant, the video signals comprise MPEG-over-IP-over MPEG encoded signals.

**[0052]** In a sixth aspect of the invention, a method of delivering video services over a network is disclosed. In one embodiment, the method comprises: receiving video signals at a first device using a first network interface apparatus; receiving data signals at a second device using a second network interface apparatus, the first and second devices being in data communication with one another; and sending upstream signals destined for a network entity from the first device via the second network interface apparatus of the second device.

**[0053]** In one variant, the first device comprises a set-top box or digital video recorder (DVR), and the second device comprises a premises gateway device.

**[0054]** In another variant, the first device comprises a set-top box or digital video recorder (DVR), the second network interface apparatus comprises a cable modem, and the method further comprises receiving, via the second network interface apparatus of the second device, downstream signals from a network entity, the signals destined for the first device.

**[0055]** In yet another variant, the first device and the second device comprise a trusted security domain, and the method further comprises enforcing at least one security policy with respect to at least the video signals within the domain.

**[0056]** In still another variant, at least one of the first device and the second device comprise a secure microprocessor, and the method further comprises downloading at least a common image and a personalized software image to the secure microprocessor pursuant to establishing a conditional access privilege.

**[0057]** In a seventh aspect of the invention, a method of doing business is disclosed. In one embodiment, the method comprises: providing a premises gateway device having at least an out-of-band (OOB) network interface to a subscriber; providing a video rendering or recording device to the subscriber, the rendering or recording device having no out-of-band network interface; and causing the subscriber to use the at least OOB interface of the gateway device for OOB communications between the rendering or recording device and the network.

## BRIEF DESCRIPTION OF THE DRAWINGS

**[0058]** FIG. **1** is a functional block diagram illustrating an exemplary HFC cable network configuration useful with the present invention.

**[0059]** FIG. **1***a* is a functional block diagram illustrating one exemplary HFC cable network headend configuration useful with the present invention.

**[0060]** FIG. **1***b* is a functional block diagram illustrating one exemplary local service node configuration useful with the present invention.

**[0061]** FIG. **1***c* is a functional block diagram illustrating one exemplary broadcast switched architecture (BSA) network useful with the present invention.

**[0062]** FIG. **2***a* is a block diagram illustrating a typical prior art premises network topology used with a cable television network.

**[0063]** FIG. **2***b* is a block diagram illustrating a first embodiment of the premises network topology according to the present invention.

**[0064]** FIG. **3** is a block diagram illustrating a second embodiment of a premises network topology according to the present invention.

**[0065]** FIG. **4** is a block diagram of another exemplary network premises topology according to the present invention, utilizing a converged premises device (CD).

**[0066]** FIG. **5** is a block diagram of yet another network topology according to the present invention, utilizing a premises services gateway (PSG) comprising the functionality of a digital video recorder.

**[0067]** FIG. **6** is a block diagram of an exemplary premises services gateway (PSG) configuration adapted for use in an "all-IP" cable network.

**[0068]** FIG. **7** is a logical flow diagram of a first embodiment of the method of operating a premises network according to the present invention.

**[0069]** FIGS. **8** and **8***a* are logical flow diagrams of a second embodiment of the method of operating a premises network according to the present invention, and a variant thereof, respectively.

**[0070]** FIG. **9** is a flow diagram of a method used in accordance with a third embodiment of the present invention.

**[0071]** FIG. **10** is a flow diagram of a method used in accordance with a fourth embodiment of the present invention.

**[0072]** FIG. **11** is a block diagram of a first embodiment of a premises services gateway device according to the invention.

**[0073]** FIG. **12** is a block diagram of a second embodiment of a premises services gateway device according to the invention, comprising integrated digital video recording (DVR) and high-speed data functionality.

**[0074]** FIG. **13** is a block diagram of a third embodiment of a premises services gateway device according to the invention, comprising a unified or wideband tuner apparatus, and integrated video and high-speed data capability.

**[0075]** FIG. **14** is a block diagram of a fourth embodiment of a premises services gateway device according to the invention, comprising integrated digital video recording (DVR), digital set-top box (DSTB), and high-speed data functionality.

**[0076]** FIG. **15** is a block diagram of a fifth embodiment of a premises services gateway device according to the invention, with integrated DVR and further adapted for IP-based processing and distribution.

## DETAILED DESCRIPTION OF THE INVENTION

**[0077]** Reference is now made to the drawings wherein like numerals refer to like parts throughout.

**[0078]** As used herein, the term "application" refers generally to a unit of executable software that implements a certain functionality or theme. The themes of applications vary broadly across any number of disciplines and functions (such as on-demand content management, e-commerce transactions, brokerage transactions, home entertainment, calculator etc.), and one application may have more than one theme. The unit of executable software generally runs in a predetermined environment; for example, the unit could comprise a downloadable Java Xlet™ that runs within the JavaTV™ environment.

**[0079]** As used herein, the terms "client device" and "end user device" include, but are not limited to, set-top boxes (e.g., DSTBs), personal computers (PCs), and minicomputers, whether desktop, laptop, or otherwise, and mobile devices such as handheld computers, PDAs, personal media devices (PMDs), such as for example an iPod™, or Motorola ROKR, and smartphones.

**[0080]** As used herein, the term "codec" refers to an video, audio, or other data coding and/or decoding algorithm, process or apparatus including, without limitation, those of the MPEG (e.g., MPEG-1, MPEG-2, MPEG-4, etc.), Real (RealVideo, etc.), AC-3 (audio), DiVX, XViD/ViDX, Windows Media Video (e.g., WMV 7, 8, or 9), ATI Video codec, or VC-1 (SMPTE standard 421M) families.

**[0081]** As used herein, the term "computer program" or "software" is meant to include any sequence or human or machine cognizable steps which perform a function. Such program may be rendered in virtually any programming language or environment including, for example, C/C++, Fortran, COBOL, PASCAL, assembly language, markup languages (e.g., HTML, SGML, XML, VoXML), and the like, as well as object-oriented environments such as the Common Object Request Broker Architecture (CORBA), Java™ (including J2ME, Java Beans, etc.), Binary Runtime Environment (e.g., BREW), and the like.

**[0082]** As used herein, the term "conditional access" refers to any access control scheme, whether implemented in hardware, software, or firmware (or combinations thereof), including without limitation members of the "PowerKey™" family, NDS (including VideoGuard, mVideoGuard, etc.), DVB, and Motorola/General Instrument DigiCipher® family (DigiCipher II, etc.). These can be implemented using, for example, CA-specific hardware/software elements embedded in the device, the so-called "CableCARD™" plug-in security module access technology, a downloadable CA system (DCAS), or otherwise.

**[0083]** The terms "Customer Premises Equipment (CPE)" and "host device" refer to any type of electronic equipment located within a customer's or user's premises and connected to a network. The term "host device" refers generally to a terminal device that has access to digital television content via a satellite, cable, or terrestrial network. The host device functionality may be integrated into a digital television (DTV) set. The term "customer premises equipment" (CPE) includes such electronic equipment such as set-top boxes (e.g., DSTBs), televisions, cable modems (CMs), embedded multimedia terminal adapters (eMTAs), whether stand-alone or integrated with other devices, Digital Video Recorders (DVR), gateway storage devices (Furnace), and ITV Personal Computers.

**[0084]** As used herein, the term "display" means any type of device adapted to display information, including without limitation CRTs, LCDs, TFTs, plasma displays, LEDs, incan-

descent and fluorescent devices. Display devices may also include less dynamic devices such as, for example, printers, e-ink devices, and the like.

**[0085]** As used herein, the term "DVI" (digital video interface) refers generally to any type of interface (e.g., hardware and/or software) adapted to provide interface and/or conversion between different formats or domains, including without limitation interfaces compliant with the Digital Display Working Group (DDWG) DVI specification (e.g., DVI-A, DVI-D, and DVI-I). For example, using a DVI connector and port, a digital signal sent to an analog monitor is converted into an analog signal; if the monitor is digital, such as a flat panel display, no conversion is necessary. A DVI output is an option in OpenCable compliant hardware that provides a high-definition TV (HDTV) output which includes copy protection.

**[0086]** As used herein, the term "DVR" (digital video recorder) refers generally to any type or recording mechanism and/or software environment whereby content sent over a network can be recorded and selectively recalled. Such DVR may be dedicated in nature, or part of a non-dedicated or multi-function system.

**[0087]** As used herein, the term "DOCSIS" refers to any of the existing or planned variants of the Data Over Cable Services Interface Specification, including for example DOCSIS versions 1.0, 1.1, 2.0 and 3.0. DOCSIS (version 1.0) is a standard and protocol for internet access using a "digital" cable network. DOCSIS 1.1 is interoperable with DOCSIS 1.0, and has data rate and latency guarantees (VoIP), as well as improved security compared to DOCSIS 1.0. DOCSIS 2.0 is interoperable with 1.0 and 1.1, yet provides a wider upstream band (6.4 MHz), as well as new modulation formats including TDMA and CDMA. It also provides symmetric services (30 Mbps upstream).

**[0088]** As used herein, the term "headend" refers generally to a networked system controlled by an operator (e.g., an MSO) that distributes programming to MSO clientele using client devices. Such programming may include literally any information source/receiver including, inter alia, free-to-air TV channels, pay TV channels, interactive TV, and the Internet. DSTBs may literally take on any configuration, and can be retail devices meaning that consumers may or may not obtain their DSTBs from the MSO exclusively. Accordingly, it is anticipated that MSO networks may have client devices from multiple vendors, and these client devices will have widely varying hardware capabilities. Multiple regional headends may be in the same or different cities.

**[0089]** As used herein, the term "integrated circuit (IC)" refers to any type of device having any level of integration (including without limitation ULSI, VLSI, and LSI) and irrespective of process or base materials (including, without limitation Si, SiGe, CMOS and GaAs). ICs may include, for example, memory devices (e.g., DRAM, SRAM, DDRAM, EEPROM/Flash, ROM), digital processors, SoC devices, FPGAs, ASICs, ADCs, DACs, transceivers, memory controllers, and other devices, as well as any combinations thereof.

**[0090]** As used herein, the terms "Internet" and "internet" are used interchangeably to refer to inter-networks including, without limitation, the Internet.

**[0091]** As used herein, the term "memory" includes any type of integrated circuit or other storage device adapted for storing digital data including, without limitation, ROM. PROM, EEPROM, DRAM, SDRAM, DDR/2 SDRAM, EDO/FPMS, RLDRAM, SRAM, "flash" memory (e.g., NAND/NOR), and PSRAM.

**[0092]** As used herein, the terms "microprocessor" and "digital processor" are meant generally to include all types of digital processing devices including, without limitation, digital signal processors (DSPs), reduced instruction set computers (RISC), general-purpose (CISC) processors, microprocessors, gate arrays (e.g., FPGAs), PLDs, reconfigurable compute fabrics (RCFs), array processors, secure microprocessors, and application-specific integrated circuits (ASICs). Such digital processors may be contained on a single unitary IC die, or distributed across multiple components.

**[0093]** As used herein, the terms "MSO" or "multiple systems operator" refer to a cable, satellite, or terrestrial network provider having infrastructure required to deliver services including programming and data over those mediums.

**[0094]** As used herein, the terms "network" and "bearer network" refer generally to any type of telecommunications or data network including, without limitation, hybrid fiber coax (HFC) networks, satellite networks, telco networks, and data networks (including MANs, WANs, LANs, WLANs, internets, and intranets). Such networks or portions thereof may utilize any one or more different topologies (e.g., ring, bus, star, loop, etc.), transmission media (e.g., wired/RF cable, RF wireless, millimeter wave, optical, etc.) and/or communications or networking protocols (e.g., SONET, DOCSIS, IEEE Std. 802.3, ATM, X.25, Frame Relay, 3GPP, 3GPP2, WAP, SIP, UDP, FTP, RTP/RTCP, H.323, etc.).

**[0095]** As used herein, the terms "network agent" and "network entity" refers to any network entity (whether software, firmware, and/or hardware based) adapted to perform one or more specific purposes. For example, a network agent or entity may comprise a computer program running in server belonging to a network operator, which is in communication with one or more processes on a CPE or other device.

**[0096]** As used herein, the term "node" refers without limitation to any location, functional entity, or component within a network.

**[0097]** As used herein, the term "QAM" refers to modulation schemes used for sending signals over cable networks. Such modulation scheme might use any constellation level (e.g. QPSK, 16-QAM, 64-QAM, 256-QAM, etc.) depending on details of a cable network. A QAM may also refer to a physical channel modulated according to the schemes.

**[0098]** As used herein, the term "network interface" refers to any signal, data, or software interface with a component, network or process including, without limitation, those of the Firewire (e.g., FW400, FW800, etc.), USB (e.g., USB2), Ethernet (e.g., 10/100, 10/100/1000 (Gigabit Ethernet), 10-Gig-E, etc.), MoCA, Serial ATA (e.g., SATA, e-SATA, SATAII), Ultra-ATA/DMA, Coaxsys (e.g., TVnet™), radio frequency tuner (e.g., in-band or OOB, cable modem, etc.), WiFi (802.11a,b,g,n), WiMAX (802.16), PAN (802.15), or IrDA families.

**[0099]** As used herein, the term "server" refers to any computerized component, system or entity regardless of form which is adapted to provide data, files, applications, content, or other services to one or more other devices or entities on a computer network.

**[0100]** As used herein, the terms "source" and "sink" refer generally and without limitation to sources of content (e.g.,

data, video, audio, multimedia, files, games, cryptographic elements, etc.) and users or requesters of content, respectively.

**[0101]** As used herein, the term "storage device" refers to without limitation computer hard drives, DVR device, memory, RAID devices or arrays, optical media (e.g., CD-ROMs, Laserdiscs, Blu-Ray, etc.), or any other devices or media capable of storing content or other information.

**[0102]** As used herein, the term "user interface" refers to, without limitation, any visual, graphical, tactile, audible, sensory, or other means of providing information to and/or receiving information from a user or other entity.

**[0103]** As used herein, the term "WiFi" refers to, without limitation, any of the variants of IEEE-Std. 802.11 or related standards including 802.11 a/b/g/n.

**[0104]** As used herein, the term "wireless" means any wireless signal, data, communication, or other interface including without limitation WiFi, Bluetooth, 3G, HSDPA/HSUPA, TDMA, CDMA (e.g., IS-95A, WCDMA, etc.), FHSS, DSSS, GSM, PAN/802.15, WiMAX (802.16), 802.20, narrowband/FDMA, OFDM, PCS/DCS, analog cellular, CDPD, satellite systems, millimeter wave or microwave systems, acoustic, and infrared (i.e., IrDA).

## Overview

**[0105]** The present invention provides, inter alia, methods and apparatus unifying at least portions of the functionality of a set-top box (STB) or similar customer premises device, or a digital video recorder (DVR), with those of another device such as a cable modem. In one exemplary variant, the out-of-band signaling and communication functions typically necessary on STBs and DVRs are obviated in favor of a premises services gateway (PSG) device, which acts as a unified proxy for all inbound (downstream) and outbound (upstream) communications with the network. This approach is particularly useful to help reduce a cable provider's capital expenditures in manufacturing customer premises equipment (CPE), since the "proxied" DVR and STB no longer require an OOB tuner, and hence their cost can be reduced and simplicity, space efficiency, and even reliability increased.

**[0106]** The present invention can also be advantageously utilized to consolidate in-band tuner resources as well, thereby further reducing capital costs associated with subscriber premises installations.

**[0107]** In one variant, communication between the various entities (e.g., DVR and STB and PSG OOB proxy) is accomplished using IP-based communications.

**[0108]** In another variant, client devices that support a cable RF tuner and an IP channel distributed over coaxial cable to the PSG are disclosed. These clients can only implement the IP channel, and therefore receive all video or data information over the IP network only. This reduces the cost of the client devices by removing the tuners and the cable modems from each device.

**[0109]** In other embodiments, one or both of the foregoing DVR and STB are further physically integrated within the PSG, thereby allowing for a fully unified platform. This unified platform can use a common form factor (i.e., one box), a common coaxial interface to the parent network, common AC power supply, end even common operating system, storage devices, and middleware. Common control and user interface environments may also be utilized, such as where a single "universal" remote is provided to afford control of all STB, tuning and DVR functions.

**[0110]** The PSG is also configured to interface with any number of other devices which may be present in the customer's premises, such as e.g., MoCA-based LANs, Ethernet LANs, WiFi LANs, PANs, or even personal media devices (PMDs). The PSG can also act as a router, provide network address translation (NAT) functions, and even act as a DHCP server if so configured.

**[0111]** In another aspect, the exemplary PSG embodiments disclosed herein further facilitate the aim of easier movement of content within a "trusted domain" or authorized service domain (ASD) by inter alia unifying multiple devices and functions within a single device.

## Detailed Description of Exemplary Embodiments

**[0112]** Exemplary embodiments of the apparatus and methods of the present invention are now described in detail. While these exemplary embodiments are described in the context of the aforementioned hybrid fiber coax (HFC) cable system architecture having an multiple systems operator (MSO), digital networking capability, and plurality of client devices/CPE, the general principles and advantages of the invention may be extended to other types of networks and architectures, whether broadband, narrowband, wired or wireless, or otherwise, the following therefore being merely exemplary in nature.

**[0113]** It will also be appreciated that while described generally in the context of a consumer (i.e., home) end user domain or premises, the present invention may be readily adapted to other types of environments (e.g., commercial/enterprise, government/military, etc.) as well. Myriad other applications are possible.

**[0114]** It is further noted that while described primarily in the context of a cable system with 6 MHz RF channels, the present invention is applicable to literally any network topology or paradigm, and any frequency/bandwidth, such as for example 8 MHz channels. Furthermore, as referenced above, the invention is in no way limited to traditional cable system frequencies (i.e., below 1 GHz), and in fact may be used with systems that operate above 1 GHz band in center frequency or bandwidth, to include without limitation so-called ultra-wideband systems.

**[0115]** Also, while certain aspects are described primarily in the context of the well-known IP or Internet Protocol (described in, inter alia, RFC 791 and 2460), it will be appreciated that the present invention may utilize other types of protocols (and in fact bearer networks to include other internets and intranets) to implement the described functionality.

**[0116]** It will further be appreciated that while the exemplary embodiments presented herein are described in the context of services that may include multicast and unicast data, the present invention is applicable to other types of services that include multicast transmission of data delivered over a network having multiple physical channels or even virtual or logical channels.

**[0117]** Other features and advantages of the present invention will immediately be recognized by persons of ordinary skill in the art with reference to the attached drawings and detailed description of exemplary embodiments as given below.

## Network

**[0118]** FIG. **1** illustrates a typical content-based network configuration with which the apparatus and methods of the

present invention may be used. The various components of the network **100** include (i) one or more data and application origination points **102**; (ii) one or more content sources **103**, (iii) one or more application distribution servers **104**; (iv) one or more VOD servers **105**, and (v) customer premises equipment (CPE) **106**. The distribution server(s) **104**, VOD servers **105** and CPE(s) **106** are connected via a bearer (e.g., HFC) network **101**. A simple architecture comprising one of each of the aforementioned components **102**, **104**, **105**, **106** is shown in FIG. **1** for simplicity, although it will be recognized that comparable architectures with multiple origination points, distribution servers, VOD servers, and/or CPE devices (as well as different network topologies) may be utilized consistent with the invention. For example, the headend architecture of FIG. **1** a (described in greater detail below) may be used.

**[0119]** The data/application origination point **102** comprises any medium that allows data and/or applications (such as a VOD-based or "Watch TV" application) to be transferred to a distribution server **104**. This can include for example a third party data source, application vendor website, CD-ROM, external network interface, mass storage device (e.g., RAID system), etc. Such transference may be automatic, initiated upon the occurrence of one or more specified events (such as the receipt of a request packet or ACK), performed manually, or accomplished in any number of other modes readily recognized by those of ordinary skill.

**[0120]** The application distribution server **104** comprises a computer system where such applications can enter the network system. Distribution servers are well known in the networking arts, and accordingly not described further herein.

**[0121]** The VOD server **105** comprises a computer system where on-demand content can be received from one or more of the aforementioned data sources **102** and enter the network system. These servers may generate the content locally, or alternatively act as a gateway or intermediary from a distant source.

**[0122]** The CPE **106** includes any equipment in the "customers' premises" (or other locations, whether local or remote to the distribution server **104**) that can be accessed by a distribution server **104**.

**[0123]** Referring now to FIG. **1***a*, one exemplary embodiment of a headend architecture useful with the present invention is described. As shown in FIG. **1***a*, the headend architecture **150** comprises typical headend components and services including billing module **152**, subscriber management system (SMS) and CPE configuration management module **154**, cable-modem termination system (CMTS) and OOB system **156**, as well as LAN(s) **158**, **160** placing the various components in data communication with one another. It will be appreciated that while a bar or bus LAN topology is illustrated, any number of other arrangements as previously referenced (e.g., ring, star, etc.) may be used consistent with the invention. It will also be appreciated that the headend configuration depicted in FIG. **1***a* is high-level, conceptual architecture and that each MSO may have multiple headends deployed using custom architectures.

**[0124]** The architecture **150** of FIG. **1***a* further includes a multiplexer/encrypter/modulator (MEM) **162** coupled to the HFC network **101** adapted to "condition" content for transmission over the network. The distribution servers **104** are coupled to the LAN **160**, which provides access to the MEM **162** and network **101** via one or more file servers **170**. The VOD servers **105** are coupled to the LAN **160** as well, although other architectures may be employed (such as for example where the VOD servers are associated with a core switching device such as an 802.3z Gigabit Ethernet device). As previously described, information is carried across multiple channels. Thus, the headend must be adapted to acquire the information for the carried channels from various sources. Typically, the channels being delivered from the headend **150** to the CPE **106** ("downstream") are multiplexed together in the headend and sent to neighborhood hubs via a variety of interposed network components.

**[0125]** Content (e.g., audio, video, data, files, etc.) is provided in each downstream (in-band) channel associated with the relevant service group. To communicate with the headend or intermediary node (e.g., hub server), the CPE **106** may use the out-of-band (OOB) or DOCSIS channels and associated protocols. The OCAP 1.0, 2.0, 3.0 (and subsequent) specification provides for exemplary networking protocols both downstream and upstream, although the invention is in no way limited to these approaches.

**[0126]** It will also be recognized that the multiple servers (broadcast, VOD, or otherwise) can be used, and disposed at two or more different locations if desired, such as being part of different server "farms". These multiple servers can be used to feed one service group, or alternatively different service groups. In a simple architecture, a single server is used to feed one or more service groups. In another variant, multiple servers located at the same location are used to feed one or more service groups. In yet another variant, multiple servers disposed at different location are used to feed one or more service groups. "Switched" Networks

**[0127]** FIG. **1***c* illustrates an exemplary "switched" network architecture also useful with the premises gateway apparatus and features of the present invention. While a so-called "broadcast switched architecture" or BSA network is illustrated in this exemplary embodiment, it will be recognized that the present invention is in no way limited to such architectures.

**[0128]** Switching architectures allow improved efficiency of bandwidth use for ordinary digital broadcast programs. Ideally, the subscriber will be unaware of any difference between programs delivered using a switched network and ordinary streaming broadcast delivery.

**[0129]** FIG. **1***c* shows the implementation details of one exemplary embodiment of this broadcast switched network architecture. Specifically, the headend **150** contains switched broadcast control and media path functions **190**, **192**; these element cooperating to control and feed, respectively, downstream or edge switching devices **194** at the hub site which are used to selectively switch broadcast streams to various service groups. A BSA server **196** is also disposed at the hub site, and implements functions related to switching and bandwidth conservation (in conjunction with a management entity **198** disposed at the headend). An optical transport ring **197** is utilized to distribute the dense wave-division multiplexed (DWDM) optical signals to each hub in an efficient fashion.

**[0130]** Co-owned and co-pending U.S. patent application Ser. No. 09/956,688 filed Sep. 20, 2001 and entitled "TECHNIQUE FOR EFFECTIVELY PROVIDING PROGRAM MATERIAL IN A CABLE TELEVISION SYSTEM", incorporated herein by reference in its entirety, describes one exemplary broadcast switched digital architecture useful with the present invention, although it will be recognized by those of ordinary skill that other approaches and architectures may be substituted.

**[0131]** In addition to "broadcast" content (e.g., video programming), the systems of FIGS. **1***a* and **1***c* also deliver Internet data services using the Internet protocol (IP), although other protocols and transport mechanisms of the type well known in the digital communication art may be substituted. One exemplary delivery paradigm comprises delivering MPEG-based video content, with the video transported to user PCs (or IP-based STBs) over the aforementioned DOCSIS channels comprising MPEG (or other video codec such as H.264 or AVC) over IP over MPEG. That is, the higher layer MPEG- or other encoded content is encapsulated using an IP protocol, which then utilizes an MPEG packetization of the type well known in the art for delivery over the RF channels. In this fashion, a parallel delivery mode to the normal broadcast delivery exists; i.e., delivery of video content both over traditional downstream QAMs to the tuner of the user's STB or other receiver device for viewing on the television, and also as packetized IP data over the DOCSIS QAMs to the user's PC or other IP-enabled device via the user's cable modem.

**[0132]** Referring again to FIG. **1***c*, the IP packets associated with Internet services are received by edge switch **194**, and forwarded to the cable modem termination system (CMTS) **199**. The CMTS examines the packets, and forwards packets intended for the local network to the edge switch **194**. Other packets are discarded or routed to another component.

**[0133]** The edge switch **194** forwards the packets receive from the CMTS **199** to the QAM modulator **189**, which transmits the packets on one or more physical (QAM-modulated RF) channels to the CPE. The IP packets are typically transmitted on RF channels that are different that the RF channels used for the broadcast video and audio programming, although this is not a requirement. The CPE **106** are each configured to monitor the particular assigned RF channel (such as via a port or socket ID/address, or other such mechanism) for IP packets intended for the subscriber premises/address that they serve.

Premises Gateway and Network

**[0134]** FIG. **2***a* illustrates a common prior art premises network topology. The cable headend **150** (FIG. **1***a*) communicates with the customer premises equipment (CPE) **106** by means of an intermediary HFC network **101** and hub **204**. The "last mile" connection to the customer's premises are typically via coaxial cable **218**, but in some instances, fiber optic cable replaces coaxial cable as in a fiber-to-the-home (FTTH) implementation. So-called "fiber-to-the-curb" or FTTC optical implementations may also be used.

**[0135]** The terminating coaxial cable **218** is routed into the customer premises **106**, and is connected to one or more set-top boxes **206** (e.g., DSTB) and/or one or more cable modems **212** (e.g., DOCSIS modem). Typically, program channel content is transmitted downstream from the cable headend **150** or a BSA switching node over in-band frequencies, and internet (e.g., Internet) content is transmitted from the cable modem termination system (CMTS) over DOCSIS frequencies.

**[0136]** A set-top box **206** receives analog signals from the network via the coaxial cable, demodulates the analog signals, converts the demodulated signals into digital signals, and transmits the digital signals to a display device (e.g., television **210**) or other apparatus. These signals may also be distributed via e.g., a back-end interface to DVRs, personal media devices (PMDs), and the like.

**[0137]** The cable modem **212** operates in a generally similar fashion. The cable modem **212** receives analog signals from the network, demodulates the analog signals, converts the demodulated signals into digital signals, and transmits the digital signals to a computerized device (e.g., personal computer **216**) or series of computers **216***a* . . . **216***n* in a premises local area network (LAN) **222**.

**[0138]** As illustrated by FIG. **2***a*, customer premises equipment (CPE) typically comprises the cable modem **212** and the set-top box **208** which are separate physical units. Multiple units typically require more physical space, as well as more wiring, in the customer's premises than a single, integrated device. For example, separate coaxial cable drops may be required for in-band and DOCSIS delivery, as are separate power cords and back-end interfaces. Additionally, the manufacture of separate set-top boxes and cable modems is more expensive than the manufacture a single device incorporating the functionalities of both units. Compatibility issues (whether at a hardware or software level) may arise if the devices are placed in communication with one another; these issues are effectively obviated when a unified device is used, since the device hardware and software (including middleware) necessary to support the various functions are developed commonly, and utilize a common operating system.

**[0139]** FIG. **2***b* is a block diagram illustrating an exemplary embodiment of a premises network topology according to the invention which utilizes such an integrated device, herein referred to generally as a premises services gateway (PSG) **200**, which can take many different forms as described subsequently herein. As stated above, the PSG **200** can if so configured, be used to replace the separate cable modem **212** and the set-top box **208** of FIG. **2***a*, providing the functionality of both units. Specifically, one exemplary embodiment of the PSG **200** is adapted to receive channel content over in-band frequencies and internet content over DOCSIS frequencies. This can be accomplished via, e.g., use of a wideband tuner, use of multiple tuners, etc. For example, in one embodiment, the PSG **200** comprises an RF front end including two tuners adapted to tune to prescribed in-band and DOCSIS QAMs respectively, delivered over the network **101**. A wideband tuner arrangement such as that described in co-owned and co-pending U.S. patent application Ser. No. 11/013,671 entitled "Method and Apparatus for Wideband Distribution of Content" filed Dec. 15, 2004 and incorporated herein by reference in its entirety, may also be utilized, such as where the content associated with one or more program streams (or DOCSIS data streams) is distributed across two or more QAMs.

**[0140]** The PSG **200** then routes the received content (after any necessary intervening processing) to the appropriate target device(s), such as television **210** and/or router **214**. Data transmitted to a computer network may be handled by a conventional gateway or router **214** (as depicted by FIG. **2***b*), switch, hub, proxy server, wireless base station, or other such similar device. The connection from the PSG to the router **214** in FIG. **2***b* is typically via a standard Ethernet or CAT-5 cable **220** with RJ-45 or similar connector, although other approaches may be used. The connection from the gateway to the computers **216***a* . . . **216***n* may be via CAT-5 cable **220** as shown in FIG. **2***b*, via a wireless interface (e.g., WiFi, PAN, WiMAX, IrDA, etc.) if the router **214** and computers **216***a* . . . **216***n* support a wireless transmission medium.

**[0141]** As yet another alternative, indigenous coaxial cable routed in the premises (e.g., for delivery of the cable signal to

various rooms in the house) may be used as a medium for delivery of the signals received via the coaxial drop to the PSG **200**; i.e., as a coaxial-based LAN. Specifically, in one variant, an IP-over-coax approach of the type well known in the networking arts is used to deliver digital data over the analog coaxial cable throughout the premises. As described below with respect to the embodiment of FIG. **3**, the PSG **200** may also act as a unified communications (e.g., OOB) interface or proxy for other components within the premises network or coupled thereto.

**[0142]** FIG. **3** is a block diagram of an exemplary network topology utilizing a PSG **200** according to the invention. In this embodiment, the cable modem **212** comprises a discrete module of the PSG **200**, communicating with the network **101** using out-of-band (OOB)/Data services gateway (DSG) communication modes **300**. The PSG **200** of FIG. **3** implements an out-of-band data communication proxy for all system information to and from the headend **150** (or other upstream node) for all content rendering devices. This approach obviates the requirement for OOB (e.g., DOCSIS or the like) capability from all but one device at the premises (here, the PSG **200**). Hence, all OOB communications (upstream or downstream) from or to the connected devices at the premises LAN can be routed through the PSG's proxy though a single unified interface if desired, although another configuration (e.g., multiple coax drops may be utilized if desired; e.g., in conjunction with a MoCA architecture). The PSG **200** communicates with a plurality of digital video recorder boxes **302***a* . . . **302***n* and at least one computer **216** over a premises local area network **222** for such OOB traffic, as well as other signals. The computer **216** may also be configured to run an application (e.g., MSO-provided or authorized application) to allow the subscriber to, inter alia, communicate with and configure various aspects of the PSG's operation.

**[0143]** Moreover, the configuration of FIG. **3** may be modified to include a network interface (e.g., coax cable drop) to the authorized service domain (ASD) or trusted domain (TD) plant for that LAN. See also the discussion provided subsequently herein regarding trusted domains and other related security features.

**[0144]** Also as shown in FIG. **3**, high-value content such as that distributed to the illustrated DVRs can also be distributed to the PC **216**.

**[0145]** The present invention can also be advantageously utilized to consolidate in-band tuner resources as well, thereby further reducing capital costs associated with subscriber premises installations. For example, in one variant, the in-band tuner(s) associated with a given device are "proxied" into the PSG **200** or another such device, thereby obviating having each device maintain its own tuners.

**[0146]** FIG. **4** is a block diagram of another embodiment of the premises network according to the invention, wherein the PSG **200** further integrates a converged premises device (CD), such as that described in co-owned and co-pending U.S. patent application Ser. No. 11/378,129 entitled "Methods and Apparatus for Centralized Content and Data Delivery" filed Mar. 16, 2006, and incorporated herein by reference in its entirety. The exemplary CD **400** comprises a remotely manageable premises device that, inter alia, acts as a centralized client networking platform providing gateway services such as network management as well as traditional content and high-speed data delivery functions. The device also acts as the shared internet (e.g., Internet) connection for all devices in the premises via a cable modem or other such interface, sharing personal and DVR content such as video, music and photos (and any associated metadata) throughout the premises, and providing both a wired and wireless network in the home. Telephony services utilizing e.g., embedded multimedia terminal adapter (eMTA) and/or Wi-Fi architectures may also be provided via the converged device **400**; these services can make use of the network operator's indigenous VoIP or comparable telephony capability if desired, thereby providing an even more unified service environment for the subscriber. For example, in one embodiment, the CD or PSG is configured with a Texas Instruments DSP-based Puma-4 VoCable chipset (TNETC4700) that provides support for cellular codecs, low bit-rate codecs and advanced fax capabilities, although it will be recognized that any number of other devices and/or architectures may be used consistent with the invention to provide such functionality.

**[0147]** As previously noted, a wired home network utilizing existing coaxial cable in the premises may also be created, using e.g., an Ethernet-to-coaxial bridge technology based on the MoCA specification. This allows existing devices and DVRs to connect and share content with the CD **400**, and also allows the network operator (e.g., MSO) to control and manage the premises coaxial network.

**[0148]** The exemplary CD **400** is also advantageously accessible via any remote device with internetworking (e.g., Internet) capability, thereby allowing personal content to be accessed by the user (or other entities) from outside the premises.

**[0149]** In the embodiment depicted by FIG. **4**, downstream data (e.g., content, messaging, etc.) transmitted over in-band frequencies is sent from cable plant **101** (FIG. **1**) to a digital video recorder (DVR) **302**, set top box **208**, and CD **400** via a coaxial cable **218**. Downstream data transmitted over out-of-band frequencies (e.g., DOCSIS channels) is routed first to the CD **400** and then transmitted to the digital video recorder **302**, set-top box **208**, and computer(s) **216**. Upstream data (e.g., messaging, content or data files, etc.) is transmitted from digital video recorder **302**, set-top box **208**, or computer **216** to the CD **400** before being transmitted to the cable plant.

**[0150]** FIG. **5** is block diagram of another exemplary embodiment of the premises network topology according to the invention, wherein the PSG **200** is integrated into a digital video recorder **302**. In the embodiment depicted by FIG. **5**, downstream data is transmitted over in-band frequencies from the network (not shown) to set-top box **208** and digital video recorder **302** (part of the PSG **200**) via coaxial cable **218**. Downstream data transmitted over out-of-band frequencies is routed first to the PSG **200** and then transmitted to the computer **216** (e.g., PC, laptop, PMD, etc.). Upstream data is transmitted from set top box **208** or computer **216** to the PSG **200** before being transmitted to the cable plant via the HFC network **101**.

**[0151]** FIG. **6** is a block diagram of yet another embodiment of the premises network topology according to the invention, wherein the PSG **200** is adapted for use in an "all IP" premises network including, e.g., IP TV. The exemplary PSG **200** comprises a hard disk drive (HDD) **602** such as for example one complying with the PATA (e.g., ATA-4/5/6), SATA, or SATA II standards, or other mass storage device that can be used, inter alia, to store content delivered from the network **101** over the coaxial cable **218** (or from other sources, such as connected devices within the premises network). The PSG **200** may communicate with one or more IP-enabled set top boxes **608***a* . . . **608***n*, and one or more

personal computers **616** or PMDs. Communication between the set-top boxes **608***a* . . . **608***n*, and personal computer **616** and PSG **200** may be facilitated over wireless channels, CAT-5 cables, coaxial cables, or combinations thereof.

**[0152]** The exemplary PSG **200** further comprises apparatus to format data received from the network into data which can be transmitted over an IP network and utilized by set-top boxes **608** and personal computers **616**. Specifically, the embodiment of FIG. **6** includes an analog RF tuner, demodulation, and demultiplexing apparatus, and transcoder as required. As is well known, traditional video content is typically MPEG-based video. Accordingly, this delivery mechanism (e.g., MPEG2 packet stream) may be encapsulated using an IP protocol, or alternatively recoded into another codec format (e.g., Real or Windows Media Player) and then encapsulated using IP or a similar protocol.

**[0153]** Alternatively, the configuration of FIG. **6** also supports video transported to the IP-based PC **616** (or IP-based DSTBs) over a DOCSIS network that is encoded in MPEG (or another video codec)-over-IP over MPEG. That is, the higher layer MPEG or other encoded content is encapsulated using an IP protocol, which then utilizes an MPEG packetization for delivery over the RF channels used by a DOCSIS (or in-band) device.

**[0154]** Moreover, in one embodiment, the methods and apparatus described in co-owned and co-pending U.S. patent application Ser. No. 11/325,107 filed Jan. 3, 2006 and entitled "METHODS AND APPARATUS FOR EFFICIENT IP MULTICASTING IN A CONTENT-BASED NETWORK", incorporated herein by reference in its entirety, may be used consistent with the present invention to provide for efficient IP multicasting under inter alia, the foregoing scenario. Specifically, the foregoing disclosure provides methods and apparatus directed to eliminating or reducing wasted bandwidth associated with multicasting packetized content (including video or another such sizable transmission), and thereby increasing the overall efficiency of the content-based network. In one embodiment, the system utilizes a "switched digital" approach to (i) deliver packetized content only when requested, and (ii) selectively switch cable modems (CMs) or other such CPE to and from certain downstream channels (e.g., DOCSIS QAM-modulated RF channels) based on switching algorithms. These algorithms make use of the fact that in a typical "switched" environment, only a fraction of the available program channels are actually in use; hence, intelligent and timely switching of individual subscribers (or groups of subscribers) can allow for a great reduction in the number of downstream channels that must be allocated to delivery of the content. Moreover, in the DOCSIS environment, the subscriber's cable modems are switched selectively among different downstream QAMs in similar fashion to the switched video previously described, thereby allowing for reduction in the total number of QAMs required to service the DOCSIS functionality (which may include both traditional IP-based network services, as well as high-bandwidth video or "IP TV" content). Advantageously, these cable modems can be rapidly switched with no re-ranging or registration, thereby allowing for a substantially seamless and low-overhead switching transient which is transparent to the user. Hence, the PSG **200** described herein (which incorporated CM functionality) can be configured for such algorithmic switching.

**[0155]** The foregoing approach is particularly useful in the context of IP or similar "multicast" content that is targeted for multiple subscribers by allowing this multicast content to be delivered to multiple subscribers by selectively tuning the subscribers to common channels where the content is already being delivered to other subscribers, thereby allowing for a 1:N expansion of the content with minimal if any replication.

**[0156]** It should be noted that the above-described embodiments of the premises network topology shown in FIGS. **2***b*-**6** are merely exemplary of the broader principles of the invention; many other network configurations and possible topologies can be realized in accordance with the invention.

Security Policy Enforcement Variants

**[0157]** In another embodiment, the apparatus and methods described in co-pending and co-owned U.S. patent application Ser. No. 11/592,054 filed Dec. 1, 2006 and entitled "METHODS AND APPARATUS FOR PREMISES CONTENT DISTRIBUTION", incorporated herein by reference in its entirety, may be used in conjunction with the PSG **200** (or CD **400**) of the foregoing embodiments to, inter alia, enforce security policy. Specifically, the foregoing disclosure provides a mechanism for devices connected to a premises network to exchange information, and ultimately share or transfer protected content (including for example audiovisual or multimedia content, applications or data) in a substantially "peer-to-peer" fashion and without resort to a central security server or other such entity. Authorized "browsing" of the content present on one device by another device is also provided. In one exemplary embodiment, an application-level message exchange functionality allows the premises devices to advertise their security capabilities relating to, e.g., protected content, and query other devices for their security capabilities. This query can be performed, for example, by identifying security frameworks or security packages that a device is capable of handling. These frameworks or packages become critical in, inter alia, a heterogeneous security environment. For example, implementations of security frameworks from different vendors can be markedly different, and may or may not interoperate, such as where two different vendors use the same scrambling algorithms (e.g., Data Encryption Standard (DES), triple DES, AES, etc.) that cannot interoperate because the details of their key management are different.

**[0158]** Accordingly, the security architecture residing on two or more different client devices or domains can be reconciled and security information (and ultimately protected content) exchanged without resort to a centralized facility such as a cable headend process or entity. For example, in one embodiment, a "server" CPE (e.g., the PSG **200** or CD **400**) and a "renderer" CPE (e.g., a DSTB or DVR) are disposed within a premises network as previously described. Message exchanges between the sever and renderer identify and validate each entity and its security package or framework capabilities, as well as other capabilities that may be necessary to effect the exchange and use of the protected content, data or application (e.g., the presence of an appropriate codec, algorithm, network interface, etc.). These exchanges are all effectively automatic and transparent to the user, thereby making device location and identification, content/data/application exchange, and browsing seamless.

**[0159]** The message exchanges between the server and renderer CPE of the exemplary embodiment may follow the syntax and guidelines of industry-wide interoperability standards such as UPnP, and/or may be specific to a premises networking standard (e.g., Multimedia over Cable Alliance

(MoCA) or Home Phone Line Network (HPNA) specifications, WiFi, Ethernet, and so forth). Moreover, this capability can be seamlessly implemented using existing security frameworks and constructs, such as the Authorized Service Domain (ASD) framework previously referenced herein, thereby extending these frameworks with additional capabilities and services including local (e.g., premises network discovery, browsing, and content streaming or transfer). Security information transferred between entities may be passed via an existing in-band or OOB security protocol, or in another embodiment, requesting authentication and passing in only a HostID or comparable data.

**[0160]** The PSG **200** or CD **400** can also provide a trusted or authorized service domain (ASD) for content or data, as well as allowing a subscriber total mobility in the home by not limiting content or data to any one viewing/access location. For example, content or data may be accessed on any monitor in the premises, as well as on a PC or personal media device (PMD). The PSG or CD can also instantiate a trusted domain (TD) within the premises "domain" or PD (such domain which may or may not be co-extensive with the premises itself) if one does not already exist. For example, using a downloadable CA (DCAS) approach, the necessary software and firmware if any can be downloaded to the premises domain, thereby enabling designation of the premises domain as a trusted domain for handling content. The PSG may also act as a unified conditional access apparatus for purposes of a single premises account; i.e., any device "behind" the PSG in that premises could access content subject to DRM and any other CA/security rules. Exemplary methods and apparatus for establishing a downloadable conditional access (DCAS), DRM, or TD environment within a device or domain of a content-based network are described in co-owned and co-pending U.S. patent application Ser. No. 11/584,208 filed Oct. 20, 2006 entitled "DOWNLOADABLE SECURITY AND PROTECTION METHODS AND APPARATUS", incorporated herein by reference in its entirety.

**[0161]** Exemplary trusted domain apparatus and methods are described in co-owned and co-pending U.S. patent application Ser. No. 11/006,404 filed Dec. 7, 2004 and entitled "TECHNIQUE FOR SECURELY COMMUNICATING AND STORING PROGRAMMING MATERIAL IN A TRUSTED DOMAIN", incorporated herein by reference in its entirety, although it will be recognized that other approaches may be used.

Personal Content Server (PCS) Variants

**[0162]** In yet another embodiment of the invention, the PSG **200** (and any requisite associated devices such as e.g., mass storage, depending on PSG configuration) may be utilized to act as a "personal" or local content server, whereby content may be stored locally within the premises network. In one such embodiment, the PSG is equipped with DVR or comparable storage capability, and acts as the PCS for the local network (i.e., that "behind" the PSG). An ASD or TD may also be maintained for the LAN/PCS as previously described herein, such as via the PSG incorporating a TD and secure microprocessor (SM) and associated downloadable CA features of the type previously discussed.

**[0163]** In another embodiment, the PSG acts as the local PCS, acting as a communications proxy/controller for a connected DVR-capable device.

**[0164]** The PSG of the present invention may also advantageously be configured to act as a local or personal content aggregator; e.g., by presenting a single or unified database, also located at the premises. As noted above, this "unified database" may be indigenous to the PSG **200**, such as where a variety of aggregated content such as movies, audio, data files, etc. are stored on a mass storage device or HDD of the PSG **200** itself. Alternatively, the PSG may act as a proxy or access/control point for a unified database stored on a local connected device (e.g., DVR, PC HDD, etc.). It will further be appreciated that the aforementioned unified database need not necessarily be physically unified; i.e., the actual storage location for the content or data elements of the database may physically be distributed among two or more separate storage media, yet logically unified so as to form a virtual unified database. As one example, the HDD of the PSG **200** may be used to contain audio content, the DVR connected to the PSG used to contain video content (e.g., movies), and the HDD of the local PC used to contain data or other such files. Each of these devices can be virtually unified by an application running on the PSG **200** (and client portions running on the respective DVR and PC if required) to present the user interfacing with the PSG, such as via an on-screen display or other GUI, with an aggregate listing of content within the premises network. Unified access to this content may also be provided via e.g., the aforementioned GUI, such as for example where the user can select any given content or data element, and the appropriate application software, codec, etc. is invoked to play or otherwise access the content.

**[0165]** In other embodiments of the PSG-based toplogy approach of the present invention, mechanisms for allowing access to content (e.g., program viewing) delivery over other networks or communication channels outside of the parent content-based network may be used, such as those described in co-owned and co-pending U.S. patent application Ser. No. 11/440,490 filed May 24, **2006** entitled "PERSONAL CONTENT SERVER APPARATUS AND METHODS", incorporated herein by reference in its entirety. For example, in the context of a cable television network, programming or other content delivered to a subscriber over the cable network can be accessed via other (secondary) networks such as the Internet, LANs/WANs/MANs, a wireless service provider (WSP) network, cellular service provider (CSP) network, or even a satellite network.

**[0166]** In one such embodiment, a personal content server located, e.g., at the headend of the bearer (cable) network distributes content to the remote requesting location(s), thereby eliminating repetitious traffic to and from subscriber's premises to fulfill the requests for remote content delivery.

**[0167]** In one variant, information relating to the requesting subscriber's prior activity for the requested content is used as a basis for authorizing delivery of the remote content. For example, the remote content manager may determine whether the requested program was previously stored on the subscriber's PSG **200** or DVR attached to the local (cable) network, such as via communication with the PSG **200** or CD **400**.

**[0168]** In another variant of the invention, when the subscriber wishing to access content (e.g., watch a program) from a location outside the bearer network does not have a DVR on his premises, the personal media management server communicates with either a "network DVR" or a "virtual DVR" maintained for the subscriber at the headend or other location outside of the subscriber premises in order to determine remote access privileges.

**[0169]** In yet another variant, activity or status of the tuner (s) within the local premises device (e.g., PSG **200** or CD **400**) is used as the basis for controlling or determining delivery of the requested content to the remote location; e.g., the remote user can watch that channel to which the premises tuner is currently tuned.

**[0170]** The requested content advantageously may comprise video, audio, gaming content, software applications, stored data, or any other form of data which can be delivered over a network. On-demand content delivery (including trick mode and similar functions) is also optionally supported through the establishment of a session between the remote client device and a VOD server within the cable headend and control using extant session and stream control protocols (e.g., LSCP). Broadcast or "live" content can also be accessed via this secondary network approach.

Methods

**[0171]** FIG. **7** shows one exemplary embodiment of the method **700** of operating a premises network gateway according to the invention. First, the gateway device (e.g., PSG **200** or CD **400** is established within the premises (network) per step **702**. This may include transmitting and receiving ("negotiating") network parameters, addresses, and other such operations necessary to enable the gateway device to act as a communication proxy for the other devices connected on the premises network, such as the DSTB, DVR, and personal computer, to the headend or other upstream network node.

**[0172]** Next, the premises "LAN" is established per step **704**. As used in this context, the LAN may be as simple as one other connected or communicative device, or may be more complex (such as e.g., a MoCA-based premises LAN with multiple heterogeneous devices communicating therewith (and which may be in communication with other networks via e.g., a gateway, access point or router).

**[0173]** The gateway device finally operates as a proxy for all OOB (e.g., DOCSIS, etc.) signals from the cable network **101**, and from the premises LAN, per step **706**. Specifically, the exemplary DOCSIS interface (e.g., tuner) receives all downstream DOCSIS high-speed traffic destined for e.g., the PC, as well as all OOB signaling for the DVR, DSTB, and other devices. Similarly, the DOCSIS interface operates to transmit all upstream signaling from the premises LAN onto the network **101**.

**[0174]** Referring now to FIGS. **8-10**, exemplary methods of operation for a unified PSG device (i.e., one incorporating both in-band and OOB interface capability within a single device) are described. While such unified device may comprise separate in-band and OOB RF tuners as previously described, it may also comprise a unified or wideband tuner apparatus adapted to receive content from multiple QAMs substantially simultaneously.

**[0175]** As shown in FIG. **8**, an RF signal is first received at the unified device per step **802**. The received RF signal is typically a multiplexed analog signal comprising: (i) data content adapted to be transmitted to a computer for processing (e.g., IP-over-MPEG), and/or (ii) video content (e.g., MPEG2 encoded video or the like) adapted to be transmitted to a device such as a television or stored on a DVR. The received signal is processed at step **810** to determine whether it contains video content intended for a target device, and also at step **830** to determine whether the received signal contains data content intended for a target device. Note that steps **810** and **830** may not necessarily be performed sequentially as shown, and in fact may be performed in parallel or according to any number of other schemes. Moreover, these steps may be performed after other processing described subsequently herein (e.g., A/D conversion and demultiplexing).

**[0176]** In some embodiments, steps **810** and **830** are performed by one or more tuners, demultiplexer and demodulator stages comprised within a single device (e.g., PSG **200**). For example, a cable tuner tuned to a specific program channel (and hence one or more QAMs) indicates that the video or media content corresponding to that program channel is the appropriate video content intended for a target television. Similarly, a DOCSIS tuner by virtue of being tuned to DOCSIS QAM(s), presumes that data received over those channels is intended for data devices (such as a PC). Alternatively, the video and data components may be multiplexed into the same transport stream(s), with e.g., the data in effect acting as just another MPEG-2 encoded program (albeit encapsulating the higher layer IP protocol, and optionally a higher-layer coding such as MPEG or Real as previously described).

**[0177]** As another option, the PSG **200** may use a certain network address (e.g., MAC, IP address, etc.) or network address filter to determine whether data content is intended for a connected computer or another device. This is particularly applicable to the "all IP" variants described with respect to FIG. **6** herein.

**[0178]** If video content intended for a target device (e.g., DVR or television monitor) is discovered, the appropriate video content is converted from analog to digital (e.g., using an ADC) per step **812**, and then demodulated (e.g., QAM demodulated for cable, or QPSK for satellite applications) per step **813**. The digital demodulated content is then demultiplexed if required at step **814**. Other operations may also be performed, such as forward error correction (e.g., Reed-Solomon, Viterbi, low density parity code (LDPC), or Turbo decoding) within the foregoing process.

**[0179]** In one embodiment, the video content is demodulated and demultiplexed for only the currently tuned program channel(s). For example, if the received signal comprises program channel content for a broad range of channels 1-50, and the analog tuner is currently tuned to a frequency corresponding to say program channel 34, then only the data corresponding to program channel 34 is extracted from the multiplexed and modulated signal. In other embodiments, multiple program channels are demodulated/demultiplexed and extracted from the signal as previously described. This latter approach is useful, for example, in a digital video recorder, where multiple program channels are to be viewed and recorded simultaneously via a multi-band or wideband tuner, or other such arrangement.

**[0180]** In most situations, the resulting demultiplexed and demodulated digital signal remains in an encoded format, as digital signals are often encoded by one or more video codecs and/or container formats at the cable headend or other network node before being transmitted as a multiplexed analog signal in step **802**. For example, the digital signal may have been encoded with an MPEG-2, Real, or Windows Media encoding scheme. At step **816**, the digital signal is then accordingly decoded, and at step **818**, the decoded signal is then transmitted to a connected television for display. The method then repeats from step **802**. An appropriate digital video encoding (DVE) process may also be applied before transmission to the television or other display device for, e.g. NTSC/PAL, or RGB, or YCbCr conversion and synchronization, as is well known in the art.

**[0181]** Data content is handled in a generally similar fashion. If data content intended for a target device (e.g., PC) is present, the appropriate data content is A/D-converted after receipt from the tuner/coaxial drop (step **832**), demodulated (e.g., 64- or 256-QAM or the like for cable, and QPSK for most satellite applications) per step **833**, and demultiplexed from the QAM at step **834** if required. As stated above, some embodiments utilize a DOCSIS tuner to receive data content intended for network devices such as PCs or other computerized apparatus, thereby obviating determination of the type of content received per step **830** (i.e., it is presumed to be data content if received over the DOCSIS QAMs).

**[0182]** The signal is then transmitted to a connected computer or other device (e.g., router) for processing at step **838**. Such computer-based processing might comprise, for example, compression or coding the decoded content into another format, storage, etc. The process then repeats from step **802**.

**[0183]** In one variant, network address translation (NAT) is also performed (translating the source and/or destination addresses of the data content) as required to effect delivery within the premises network. NAT may also be used to allow each of the PCs or other nodes in the premises network to have unique addresses. This prevents multiplication of IP or other network addresses for the premises, which can be expensive for the subscriber.

**[0184]** In another embodiment, the dynamic host control protocol (DHCP) is used for network addressing by the devices on the premises LAN. As is well known, DHCP a protocol used to obtain IP addresses and other parameters such as the default gateway and subnet mask of DNS or other servers, typically from a designated DHCP server.

**[0185]** FIG. **8***a* illustrates a variant of the method illustrated by FIG. **8**. Generally speaking, the key difference in this embodiment is that video content may be transmitted to both a target television and a target computer or other computerized device. This enables, inter alia, cable television channels to be streamed to a computerized or other device and displayed on a connected viewing device, such as an LCD monitor. Thus, after the digital signal is decoded in step **816**, it is routed both to a television and a computerized device for appropriate processing. For example, this decoding might comprise MPEG-2 decoding, at which point the MPEG-over-IP encoded packets previously described are forwarded to the computer.

**[0186]** FIG. **9** illustrates another variant of the method illustrated by FIG. **8**. Here, the digital signal is encoded into a format appropriate for display on a computer monitor before being transmitted to the computer. This occurs at step **920**. The computer receiving the encoded digital signal is adapted to handle the encoding scheme accordingly.

**[0187]** FIG. **10** illustrates another variant of the method illustrated by FIG. **8**. This variant is similar to the variant shown by FIG. **8***a, except that the video content is transmitted to a target computer in its original encoded format (i.e., before being decoded at step* **1016***). Thus, this variant allows for some of work normally performed by a device such as a PSG* **200** *to be performed by a computer, provided that the computer has the appropriate codec necessary to decode the transmitted digital signal (and recode it into an appropriate format for display or distribution). This may be, for example, an MPEG*-2 or DVB codec.

**[0188]** It should be noted that the above examples are merely exemplary; many other methods and permutations of methods may be realized in accordance with the present invention and consistent within its scope.

Premises Services Gateway Apparatus

**[0189]** Referring now to FIGS. **11-15**, various exemplary configurations of the PSG **200** useful with the topologies shown in FIGS. **2***b*-**6** herein are described in greater detail.

**[0190]** As shown in FIG. **11**, a first configuration of PSG **200** comprises a substantially unified device having a coaxial cable interface **218** that is coupled to a DOCSIS tuner **1126**. The analog RF signals received over the DOCSIS tuner are A/D converted (ADC **1122**), and the digital signals demodulated (e.g., QAM-256 demodulated) using a demodulator **1102**, after which the demodulated signals are demultiplexed **1104**. An optional transcryption module **1108** adapted to perform security domain transcryption of the type previously described herein is also illustrated in FIG. **11**.

**[0191]** A DOCSIS media access controller (MAC) **1115** is used to extract the data for routing over the high-speed network interface **1112**, such as to a personal computer (PC). The interface **1112** might comprise, for example, a coaxial cable interface, an Ethernet/GBE interface with RJ-45/CAT-5, a Firewire (IEEE-1394) interface, USB interface, a wireless interface (e.g., WiFi, UWB PAN, etc.), or other.

**[0192]** Upstream DOCSIS signals are sent from the MAC **1115** to the QAM modulator **1102**, and then D/A converted **1120**, amplified, and sent upstream on an appropriate QAM.

**[0193]** The PSG **200** is also comprised of a DVR interface **1110**, which receives OOB signals (dotted lines) from the DVR, and likewise transmits downstream OOB signaling to the DVR. The DVR interface **1110** is in OOB signal communication with the DOCSIS MAC **1115**, and is controlled at least in part by the digital processor **1106**.

**[0194]** The PSG **200** also includes a DSTB interface **1118**, which like the DVR interface **1110**, is controlled by the processor **1106**, and interfaces OOB signals with the DOCSIS MAC **1115** and an external DSTB.

**[0195]** Hence, in the embodiment of FIG. **11**, the PSG **200** acts as an OOB proxy for external DVR and DSTB assets, which each have their own coaxial "in-band" interface (not shown) for delivery of in-band content. This obviates the OOB tuner on each device, thereby allowing them to be simpler and manufactured more inexpensively. In one variant, communication between the various entities (e.g., DVR and DSTB and PSG OOB proxy) is accomplished using IP-based communications of the type well known in the art, although other approaches may be used with equal success.

**[0196]** As noted above, the PSG **200** may also be used to distribute System Information (SI), a type of packet used in a MPEG-2 or Digital Video Broadcast (DVB) streams.

**[0197]** In one embodiment, network interface **1112** acts as a switch or router, and directs data content based on destination IP address headers. For example, the PSG **200** may comprise a plurality of Ethernet ports, one port comprising a connection to a network card located in a first computer, and a second port comprising a connection to a network card located in a second computer. In this variant, a unique IP address is assigned per each network card. Thus, when the interface **1112** reads a packet header indicating the destination IP address of the first or second network card, it routes the data accordingly.

**[0198]** In a second embodiment, the interface **1112** acts as a router comprising a network address translation module and a Dynamic Host Configuration Protocol (DHCP) Server (not

shown). The DHCP Server maintains a list of addresses available to assign to networked clients, and assigns these addresses accordingly. The DHCP Server ensures that all IP addresses are unique, that is, that no IP address is assigned to a second client while the first client's assignment is valid. The Network Address Translation module (NAT) is adapted to re-write the source and/or destination addresses of IP packets as they are received from either the networked devices (for packets transmitted upstream) or the data services gateway (for packets transmitted downstream). In some variants, the NAT replaces any assigned network address with the IP address of the interface **1112** as the source IP address for data packets transmitted upstream. The NAT likewise replaces the IP address of the interface **1112** with the appropriate assigned network address as the destination IP address for data transmitted downstream.

**[0199]** FIG. **12** shows an alternate configuration of the PSG **200**, wherein the PSG includes both a DOCSIS tuner **1126** and an in-band (e.g., video) tuner **1124**. The video tuner **1124** may comprise for example a standard 50-850 MHz "all-digital" tuner to receive broadcast services, although other configurations may be used. The operation of the DOCSIS portion of the device is substantially similar to that previously described for FIG. **11**, yet the PSG further includes a video processing pathway (left side of FIG. **12**), wherein video signals are demodulated **1103**, demultiplexed **1105**, transcrypted **1108**, decoded **1107** as needed, and then recorded to an indigenous DVR function **302** and associated mass storage device **1116**. Video that is to be transmitted outside the gateway **200** is optionally video encoded via the encoder **1109**, and then sent to a monitor, etc. via the video interface **1118** as shown.

**[0200]** The DVR **302** uses the OOB functions of the PSG **200** as a proxy (i.e., instead of its own OOB interface), as previously described.

**[0201]** Per FIG. **13**, yet another embodiment is illustrated, wherein a unified or wideband tuner arrangement **1124** of the type previously referenced herein is used. Here, both downstream in-band (e.g., video) and DOCSIS content are received via the unified tuner **1124**, and then demodulated and demultiplexed (and optionally transcrypted **1108**) as shown. The demultiplexed/transcrypted video is then decoded, and distributed to e.g., a video encoder **1109** as previously described with respect to FIG. **12**. The demuxed DOCSIS data is sent to the DOCSIS MAC **1115**, and distributed as previously described (e.g., to a PC or the like) with respect to FIG. **11**. A resident mass storage device **1116** (e.g., HDD) is provided in this configuration for e.g., storage of video content, although this is not a requirement.

**[0202]** In the configuration of FIG. **14**, the PSG **200** is equipped similarly to the device of FIG. **12**, with the exception that an indigenous DSTB function **1130** is provided which uses the PSG's DOCSIS interface as a proxy, as previously described (as does the DVR **302**). The DSTB functions **1130** in effect subsume normal DSTB functionality within the PSG, thereby obviating the DSTB altogether. In this fashion, a fully integrated and unified device is present, having one (1) DOCSIS tuner, two (2) or more video or in-band tuners (i.e., to support DVR recording capability and simultaneous viewing of in-band content), one (1) cable drop **218** (to service the DVR, DSTB/in-band viewing, and DOCSIS HSD functions collectively), and hence acts as a DVR, DSTB, and cable modem all in one.

**[0203]** FIG. **15** illustrates yet another possible configuration of the PSG **200**, wherein while generally similar to the device of FIG. **12**, a video IP MAC **1127** is provided, as is an IP STB interface **1128**. This "all IP" variant allows servicing of DOCSIS IP and video IP (e.g., "IP TV") functions in a unified fashion, while still maintaining a unified OOB proxy function.

**[0204]** As previously discussed, the PSG **200** may also act as part of a trusted domain (TD) or authorized service domain (TD), and support downloadable conditional access (e.g., DCAS), digital rights management (DRM), and similar functional models. For example, in one variant, the PSG **200** comprises a secure microprocessor (SM), not shown and negotiates with a personalization server (PS) and other network infrastructure in order to obtain a common and personalized software image as would a conventional download-enabled STB.

**[0205]** Moreover, the PSG **200** can be configured to use one or more identifying parameters (e.g., MAC address, TUNER_ID, TUNER_USE, or the like) as the basis for an anonymous identification of the PSG **200** (or even devices on the premises LAN with which the PSG **200** is associated. For example, in one variant, a so called "opaque" variable formed using a one-way cryptographic hash of the aforementioned parameters (or portions thereof), such as that described in co-owned and co-pending U.S. patent application Ser. No. 11/186,452 filed Jul. 20, 2005 and entitled "METHOD AND APPARATUS FOR BOUNDARY-BASED NETWORK OPERATION", incorporated herein by reference in its entirety, is used to uniquely but anonymously identify the PSG **200**. Since a DOCSIS MAC is used as the proxy for all other devices (e.g., DVR, STB, etc.), only one opaque variable can be generated if desired, somewhat akin to a single IP address for the IP MAC of the device (with NAT for the LAN-connected premises devices behind the PSG). However, other embodiments where each device (even when integrated into a unified configuration) has its own unique anonymous identifier are also contemplated under the present invention.

**[0206]** The PSG **200** of the present invention may also utilize the content evaluation and peer sourcing technologies described in co-owned and co-pending U.S. patent application Ser. No. 11/726,095 filed Mar. 20, 2007, entitled "METHODS AND APPARATUS FOR CONTENT DELIVERY AND REPLACEMENT IN A NETWORK", incorporated herein by reference in its entirety. For example, in one such embodiment, the PSG **200** can act as a source or sink peer within a network, so as to inter alia permit bandwidth consumption to be pushed out to the edge of the network (and away from the core). The DVR function **302** of the embodiment of FIG. **12** herein, for instance, might include a client process adapted to evaluate downloaded and stored content, and transparently request defective or corrupted portions of this content from peer devices on the network that have the requisite content.

**[0207]** In yet other variants, the PSG **200** of the present invention may include transcoding, transcrypting, or transrating functionality. Essentially, a transcoder receives a signal encoded in one format, translates the signal into a signal encoded in another format, and transmits or stores the translated signal. This is useful because a variety of standards and compression schemes are currently being employed to encode remote content. Thus, transcoder can be used, inter alia, for converting unreadable content into a readable format

for a given client device. For example, this allows the PSG **200** to translate video content encoded in a format appropriate for television viewing into a format which can be read and processed by a client computer, and vice versa.

**[0208]** The exemplary transcrypter module (not shown) provides translation of security data or protection mechanisms between different environments or domains (e.g., between a conditional access domain resident on the cable television network), and a Digital Rights Management (DRM) scheme resident on e.g., an IP-based computer resident on the premises LAN connected to the PSG **200**. In this fashion, content or other data within the cable environment can "jump the fence" to DRM or other security environments that may be more widely deployed on IP-based devices for example. This is particularly useful for the "all IP" embodiments previously described herein with respect to FIGS. **6** and **15**.

Business Models

**[0209]** In another aspect of the invention, the aforementioned apparatus and methods can be used as the basis for one or more business models.

**[0210]** As previously discussed, various embodiments of the invention advantageously reduce capital costs associated with CPE and infrastructure, such as by eliminating costs associated with tuners for these devices (e.g., on the order of $20 USD per cable modem, and $10-$40 USD per tuner). The invention may also be used to obviate multiple CableCards or other conditional access mechanisms within a given premises, which not only saves costs but also allows for a more unified CA implementation.

**[0211]** For example, in one embodiment, the network operator (e.g., MSO of a cable network) can use the OOB proxy capabilities described herein as a basis for reducing the cost of deploying CPE within the subscriber's premises. Instead of providing a DVR or STB with both video and OOB tuners and processing, the MSO might provide the subscriber with a PSG which obviates the need for separate OOB tuning and support in the DVR and/or STB. This also potentially simplifies communication infrastructure at the headend, since the headend OOB communications process need only interface with a single communication entity (i.e., the OOB apparatus in the PSG, which acts as a proxy for the other devices).

**[0212]** In another variant, the MSO provides the subscriber with a unified or converged device **400** of the type previously described. The CD includes indigenous high speed data (e.g., DOCSIS cable modem) capability, and hence can act as an OOB proxy in all cases. This allows the MSO (or the subscriber) to provide STB and DVR devices that do not have OOB tuners and supporting components, and hence cost less. The distribution of the CD may be done to all subscribers (e.g., whether they have subscribed for high speed data services or not) so as to simplify stocking, delivery installation, and configuration processes by the MSO ("one size fits all" approach of sorts), or alternatively in a more selective fashion; e.g., to only subscribers that need high speed data capability.

**[0213]** As another option, the MSO or another entity can selling or provide services that are licensed on a per-dwelling or per-unit basis, somewhat akin to prior art software "site" licensing approaches. Such an approach is also advantageously expandable, such as more DVRs, PCs, STBs, etc. are added to a particular premises or installation.

**[0214]** In another variant, an embedded multimedia terminal adapter (eMTA) of the type previously described herein is included within the PSG **200** or CD for inter alia digital telephony functions, thereby further reducing and consolidating capital costs. Embedded multimedia terminal adapters (eMTAs) offer significant revenue opportunities for MSOs by combining delivery of high-speed data with VoIP services by connecting legacy telephony and terminal equipment (such as a fax machine) to an MSO's IP network. Traditional telephone functions such as call waiting, 3-way calling, voice mail and fax are supported.

**[0215]** In yet another embodiment, the PSG **200** can be used to host or receive service or other applications. For example, an application with a particular service or maintenance functionality can be downloaded top the PSG (or a designated proxy device, such as the aforementioned PC) and run as needed to provide the necessary functions. This application can then stay resident (dormant) on the PSG or PC, be destroyed upon completion of its function, and so forth. The application might be used for example to collect polling or sample data from one or more devices within the premises network, monitor PSG functions, initiate communications with other devices (e.g., as a local communications proxy according to a prescribed communications or data transfer protocol), etc.

**[0216]** Similarly, the PSG **200** or a designated proxy thereof can be used as a "Point of Presence" (PoP) for the network operator; e.g., a chat, text, audio, etc. interactive user interface, which allows for real-time interactive communication between the operator (e.g., MSO) and the user. Such functionality may be useful, for example, where the user requires "on line" or real time help with finding or activating a service, troubleshooting, subscription package changes, movie downloads, and the like.

**[0217]** The PSG **200** may also be used as part of a peer-to-peer (P2P) network for, inter alia, content sharing or replacement, such as that described in co-pending and co-owned U.S. patent application Ser. No. 11/726,095 filed Mar. 20, 2007 previously incorporated herein by reference in its entirety. Other P2P approaches may be used as well consistent with the aim of having the PSG or a designated proxy communicate with other CPE on the network.

**[0218]** It will be recognized that while certain aspects of the invention are described in terms of a specific sequence of steps of a method, these descriptions are only illustrative of the broader methods of the invention, and may be modified as required by the particular application. Certain steps may be rendered unnecessary or optional under certain circumstances. Additionally, certain steps or functionality may be added to the disclosed embodiments, or the order of performance of two or more steps permuted. All such variations are considered to be encompassed within the invention disclosed and claimed herein.

**[0219]** While the above detailed description has shown, described, and pointed out novel features of the invention as applied to various embodiments, it will be understood that various omissions, substitutions, and changes in the form and details of the device or process illustrated may be made by those skilled in the art without departing from the invention. The foregoing description is of the best mode presently contemplated of carrying out the invention. This description is in no way meant to be limiting, but rather should be taken as

illustrative of the general principles of the invention. The scope of the invention should be determined with reference to the claims.

What is claimed is:

**1**. A premises gateway device for use in a content-based network, comprising:

first apparatus adapted to receive first signals transmitted over a first frequency band via said network;

second apparatus adapted to receive second signals transmitted over a second frequency band via said network, and transmit third signals over said second band also via said network; and

an interface to another premises device;

wherein said another premises device utilizes said second apparatus as a communications proxy for transmitting said third signals via said second band that it would otherwise have to transmit via a separate interface to said network.

**2**. The gateway device of claim **1**, wherein the gateway device further comprises a converged premises device having a cable LAN interface and an Ethernet LAN interface.

**3**. The gateway device of claim **1**, wherein the gateway device further comprises a digital video recorder, and said another device comprises a set-top box (STB).

**4**. The gateway device of claim **1**, wherein said first signals comprise in-band downstream signals received over a coaxial cable, and said second signals comprise downstream data signals also received over said coaxial cable, and said third signals comprise out-of-band upstream signals.

**5**. The gateway device of claim **4**, wherein the gateway device further comprises a digital video recorder, and said another device comprises a set-top box (STB).

**6**. The gateway device of claim **4**, wherein said second apparatus comprises a DOCSIS-compliant cable modem having at least a demodulator.

**7**. The gateway device of claim **1**, wherein said another premises device comprises a set-top box having only an in-band tuner, and not capable of communicating over said second frequency band directly.

**8**. The gateway device of claim **1**, further comprising a trusted domain (TD) adapted to maintain at least one security policy within said premises gateway device and one or more other premises devices in data communication with said gateway device.

**9**. The gateway device of claim **1**, further comprising a secure microprocessor (SM) adapted to obtain both a common and personalized software image for use with a conditional access system.

**10**. A gateway device for use in a content-based network, comprising:

first apparatus adapted to receive first signals transmitted over a first frequency band via said network, and transmit second signals over said first band also via said network;

a first data interface to a first premises device; and

a second data interface to a second premises device;

wherein said first frequency band comprises a band used for either out-of-band (OOB) signaling or cable modem operation; and

wherein said first and second premises devices each utilize said first apparatus as a communications proxy for transmitting said second signals.

**11**. The gateway device of claim **10**, wherein said content-based network comprises a cable network, and said first premises device comprises a set-top box (STB), and said second device comprises a digital video recorder (DVR).

**12**. The gateway device of claim **1**IP-over **1**, wherein said STB and said DVR comprise only in-band tuners.

**13**. The gateway device of claim **10**, wherein said first apparatus comprises a DOCSIS compliant cable modem.

**14**. The gateway device of claim **10**, wherein said first and second premises devices each communicate with said first apparatus using an internet protocol (IP).

**15**. The gateway device of claim **14**, wherein said first apparatus comprises a DOCSIS compliant cable modem with media access controller (MAC).

**16**. The gateway device of claim **10**, wherein said first premises device comprises a personal computer, and said first interface comprises an Ethernet card.

**17**. The gateway device of claim **10**, wherein at least one of said first and second interfaces comprises a coaxial cable interface to a MoCA-compliant local area network (LAN).

**18**. The gateway device of claim **10**, wherein said gateway device comprises network address translation (NAT) capability.

**19**. The gateway device of claim **10**, wherein said gateway device comprises a Dynamic Host Configuration Protocol (DHCP) server.

**20**. The gateway device of claim **10**, wherein said gateway device comprises a codec adapted to encode a signal.

**21**. The gateway device of claim **10**, wherein said gateway device comprises a transcoder apparatus adapted to encode a signal encoded according to a first format into a second format different from the first.

**22**. The gateway device of claim **10**, wherein said first and second premises devices comprise IP-enabled devices, and said gateway device is adapted to communicate IP protocol data with said first and second premises devices via said first and second interfaces.

**23**. The gateway device of claim **22**, wherein said gateway device comprises a transcryption apparatus adapted to transcrypt data from a first security environment to a second security environment.

**24**. The gateway device of claim **23**, wherein said first security environment comprises a conditional access environment, and said second security environment comprises a digital rights management environment.

**25**. Set-top box apparatus, comprising:

first apparatus adapted to receive, demodulate, and decode encoded video signals sent via a cable television network; and

second apparatus configured to communicate data or signals with a premises device via a communication channel, said premises device being adapted to provide out-of-band (OOB) communication with one or more other entities on said cable television network based at least in part on said data or signals;

wherein said premises device acts as an OOB communication proxy for said set-top box apparatus.

**26**. The set-top box apparatus of claim **25**, wherein said first apparatus comprises an in-band tuner, and said second apparatus comprises an OOB signaling interface.

**27**. The set-top box apparatus of claim **25**, wherein said first apparatus comprises an in-band tuner, and said second apparatus comprises an IP-based media access controller (MAC).

**28**. The set-top box apparatus of claim **25**, wherein said premises device comprises an out-of-band tuner.

**29**. Digital video recorder apparatus, comprising:

first apparatus adapted to receive, demodulate, and decode encoded video signals sent via a cable television network;

second apparatus adapted to record said decoded video signals for subsequent playback or transmission; and

third apparatus configured to communicate data or signals with a premises device via a communication channel, said premises device being adapted to provide out-of-band (OOB) communication with one or more other entities on said cable television network based at least in part on said data or signals;

wherein said premises device acts as an OOB communication proxy for said digital video recorder apparatus.

**30**. The digital video recorder apparatus of claim **29**, wherein said first apparatus comprises an in-band tuner, and said third apparatus comprises an OOB signaling interface.

**31**. The digital video recorder apparatus of claim **29**, wherein said first apparatus comprises an in-band tuner, and said third apparatus comprises an IP-based media access controller (MAC).

**32**. The digital video recorder apparatus of claim **29**, wherein said premises device comprises an out-of-band tuner.

**33**. The digital video recorder apparatus of claim **32**, wherein said second apparatus comprises a hard-disk drive, and said recorder apparatus enforces at least one of a trusted domain (TD) or authorized service domain (ASD) content protection policy.

**34**. The digital video recorder apparatus of claim **29**, wherein said premises device and said digital video recorder comprise a unified form factor.

**35**. The digital video recorder apparatus of claim **29**, wherein said premises device further comprises a video interface to a monitor or set-top box.

**36**. The digital video recorder apparatus of claim **29**, wherein said premises device further comprises an interface to a set-top box having only an in-band tuner, said premises device acting as an OOB communication proxy for said set-top box.

**37**. Premises gateway apparatus for use with a content-based network, the apparatus comprising:

a first tuner adapted to receive first signals in a first frequency band from said network, and obtain first data from said first signals;

a second tuner adapted to receive second signals in a second frequency band from said network, and obtain second data from said second signals;

a first interface adapted to format said first data according to a protocol, and distribute said formatted data to at least one first premises device in data communication with said gateway apparatus; and

a second interface adapted to at least distribute said second data to at least one second premises device in data communication with said gateway apparatus.

**38**. The gateway apparatus of claim **37**, wherein said network comprises a cable television network, and said first signals are delivered over said network associated with in-band QAMs.

**39**. The gateway apparatus of claim **38**, wherein said second signals are delivered over said network associated with out-of-band QAMs.

**40**. The gateway apparatus of claim **39**, wherein said first interface is adapted to format data packets received via said in-band QAMs according to an internet protocol (IP).

**41**. The gateway apparatus of claim **40**, wherein said second interface comprises a TCP transport layer protocol and an IP network layer protocol, and said at least one second premises device comprises a personal computer.

**42**. The gateway apparatus of claim **40**, wherein said at least one first premises device comprises an IP-enabled digital set-top box.

**43**. The gateway apparatus of claim **42**, wherein said second tuner apparatus is further adapted to transmit signals in said second frequency band over said network to a distant entity.

**44**. The gateway apparatus of claim **43**, wherein said transmitted signals comprise signals originated from said digital set-top box.

**45**. A method of delivering video and data services over a cable network, comprising:

receiving video and data signals at a gateway device from a common coaxial cable;

using at least a first tuner to extract said video signals;

using at least a second tuner to extract said data signals;

processing said video signals according to a network layer protocol to produce a plurality of protocol packets; and

delivering said protocol packets to a packet-enabled client device for viewing, said packet-enabled device being in data communication with said gateway device.

**46**. The method of claim **45**, further comprising delivering said data signals to a computerized device in data communication with said gateway device.

**47**. The method of claim **45**, wherein said network layer protocol comprises the Internet Protocol (IP).

**48**. The method of claim **45**, wherein said video signals comprise MPEG-over-IP-over MPEG encoded signals.

**49**. A method of delivering video services over a network, comprising:

receiving video signals at a first device using a first network interface apparatus;

receiving data signals at a second device using a second network interface apparatus, said first and second devices being in data communication with one another; and

sending upstream signals destined for a network entity from said first device via said second network interface apparatus of said second device.

**50**. The method of claim **49**, wherein said first device comprises a set-top box or digital video recorder (DVR), and said second device comprises a premises gateway device.

**51**. The method of claim **49**, wherein said network comprises a cable network, said first device comprises a set-top box or digital video recorder (DVR), and said second network interface apparatus comprises a cable modem.

**52**. The method of claim **51**, further comprising receiving, via said second network interface apparatus of said second device, downstream signals from a network entity, said signals destined for said first device.

**53**. The method of claim **49**, wherein said first device and said second device comprise a trusted security domain, and said method further comprises enforcing at least one security policy with respect to at least said video signals within said domain.

**54**. The method of claim **49**, wherein at least one of said first device and said second device comprise a secure micro-

processor, and said method further comprises downloading at least a common image and a personalized software image to said secure microprocessor pursuant to establishing a conditional access privilege.

**55**. A method of doing business, comprising:

providing a premises gateway device having at least an out-of-band (OOB) network interface to a subscriber;

providing a video rendering or recording device to said subscriber, said rendering or recording device having no out-of-band network interface; and

causing said subscriber to use said at least OOB interface of said gateway device for OOB communications between said rendering or recording device and said network.

* * * * *