The Full (Band) Story:

How Smart CPE Will Change HFC Maintenance Forever

A Technical Paper prepared for the Society of Cable Telecommunications Engineers
By

Jim Walsh
Product Line Manager
JDSU
Indianapolis, IN
Jim.Walsh@jdsu.com

Bruce Currivan
Technical Director, Communications Systems
Broadcom Corporation
Santa Clara, CA
bjcapc@aol.com

ENTROPIC EXHIBIT 2009
Comcast v. Entropic
IPR2024-00441

Overview

From the earliest days of cable up until very recently, customer premises equipment (CPE) were often viewed just as a frequent *cause* of truck rolls. Except for a few visionaries there weren't many people who could have foreseen them as perhaps the greatest source of opportunity to *eliminate* truck rolls. That is exactly what smart CPE and the ecosystem that supports them have started to do; they have created perhaps the most significant inflection point in cable plant maintenance and troubleshooting practices in a generation. In this paper we will present a brief history of CPE polling, what limitations have historically held it back from becoming more of a mainstream practice, the recent changes that have made it ubiquitous, and where it may go from here. The new capabilities enabled by smart CPE have impacted or soon will impact the maintenance and troubleshooting practices employed by nearly every MSO employee who touches the HFC plant and even some who don't. These changes will be discussed as well. The paper will wrap up with a sneak peek into what additional benefits smart CPE may offer in the future as test and measurement capabilities are designed into protocols early in their definition instead of being an afterthought.

History of CMTS/CPE polling including past limitations

The concept of gaining plant health insight by remotely interrogating the CPE and the CMTS is not new; the earliest polling examples even pre-date DOCSIS implementations. The interest in this practice seems to ebb and flow, and currently appears to be on a steep trajectory upward. This resurgence of interest is due to the step-change growth in polled information value, as well as the breadth of the community that now has ready access to the data and its benefits. Widespread access to CPE/CMTS polled data hasn't always been the norm. Early on, polling usage was relegated to a select few trusted individuals based on concerns about the potential impact of excessive polling on the CPE and the CMTS's ability to perform its primary service provision function. Worse yet, these individuals often resided within the IT community, completely segregated from the technicians who could benefit most from the results. Over time, CMTS performance impact concerns are diminishing as processing power rapidly increases and core functionality is protected by the proper designation of diagnostic thread priority. Concerns remain today over network traffic bandwidth consumed by polling, although in most cases an appropriate balance is reached between diagnostic value and polled data bandwidth consumption. Careful consideration is generally applied to which parameters to poll and at which frequency. CPE metrics requiring minimal bandwidth, such as MER and power levels, are polled on intervals as short as every 15 minutes with a few extreme examples of polling every modem every 5 minutes. Larger datasets, such as pre-equalization taps, tend to be polled less frequently, which is not necessarily a bad thing as they don't tend to change as frequently due to the nature of the most common underlying causes affecting them.

Also changing is the simplicity with which information can be gathered from CPE. Standardization of DOCSIS MIBs has allowed operators to poll CPE from multiple manufacturers using a common request and receive results which can be compared to one another. There will always be slight differences in how each manufacturer implements these standards but commonization makes life much easier on operators compared to the early days of every manufacturer doing things differently. The protocol used to gather information from CPE – SNMP – has remained constant for some time now. Despite its limitations, SNMP remains the de facto device information access method. While there is currently a discussion in the industry about selecting other, faster protocols more suited to CPE polling evolution, SNMP remains the most common data request/retrieval method.

Inflection point – what changed the game?

While CPE polling has been evolving over the past decade or two we are currently at a key inflection point in this area. A confluence of factors have combined to result in a large increase in the value that CPE can add in HFC maintenance and troubleshooting processes, and as a result we have seen a corresponding increase in interest in CPE polling as a mainstream HFC maintenance and troubleshooting method.

A few key drivers of the step-change occurring now:

- Application of upstream pre-equalization tap data from CPE
- CPE hardware breakthroughs
    - Enabling completely new capabilities
    - Enabling entry of non-traditional players into the ecosystem
- Expanded support ecosystem
    - Collaborative development of tools to leverage CPE data

Application of upstream pre-equalization taps:

Details of upstream pre-equalization (pre-eq) technology fundamentals and application will be covered in great detail in other papers in this same SCTE session so our coverage will be intentionally light to avoid duplication. Provisions were put into place early in DOCSIS standards to allow remote access to pre-equalization tap values from CPE in anticipation of their future use for diagnostic purposes, but it was not until about 2009 that they were able to be effectively leveraged in significant scale. The first wide public discussion of their use occurred at the 2008 SCTE Cable Tech Expo where the paper "Pre-equalization Based Pro-Active Network Maintenance Methodology" was presented by a collection of CableLabs contributors[1]. The CableLabs Proactive Network Maintenance Working Group began an effort in 2009 to explore, define, and standardize the use of pre-equalization taps for remote troubleshooting of the cable plant. About a year later the first implementations began to take shape.

The main capability set included in the first implementation was the ability to utilize pre-eq data from CPE to derive such parameters as in-band frequency response, group delay, and viewing of an equalizer tap chart describing the RF path from the CMTS to the CPE in a live production system accessible by technicians. Having access to this information on a CPE-by-CPE basis was valuable by itself and was used to detect and troubleshoot many problems, but the real magic came into play when these values were correlated across multiple CPE on a node. Once toolsets were developed (through an industry-wide collaborative process described in later sections of this paper) to do this correlation, operators realized that they were onto something big. Plant weaknesses that were difficult to detect remotely with most existing tools were suddenly visible even before they were impacting subscriber services. Further evolutions of the data systems automated the correlation process and added such capabilities as inferring distances

from certain types of plant faults, based on RF impedance mismatches, to nearest isolation point.

There will be more on the capabilities offered by systems leveraging pre-eq taps later in this paper, but the key takeaway at this point is that the realization by operators of the massive benefits that they could obtain from polling CPE for pre-eq data and analyzing data helped them quickly overcome previous barriers to CPE polling as a mainstream practice. It became clear that the benefits of CPE polling including pre-eq data greatly overshadowed the costs/risks when properly implemented and managed. The upstream pre-eq revolution is the single largest factor in sparking the increased interest in CPE polling and its escalation to a mainstream HFC maintenance and troubleshooting tool.

CPE hardware breakthroughs: Enabling completely new capabilities

About the same time that the industry was beginning to realize the significance of the upstream pre-eq breakthroughs another disruptive technology was launched in the form of downstream Full-Band Capture CPE. What this breakthrough enabled for HFC maintenance groups was essentially turning properly equipped CPE into remotely-accessible downstream spectrum analyzers. This resonated instantly across the industry which had been seeking an affordable method of deploying remotely-accessible field probes for the better part of a decade. Previous field probe proposals and implementations faced cost challenges due to the need for environmentally hardened housings, the need to cut into hard lines, powering concerns, and many other issues. Full-Band Capture CPE solved this problem, and CPE could now fulfill a significant portion of the remote field probe role very cost-effectively. These remote field probes would reside at the true network edge (within the customer's home or business), be powered and climate-controlled by cable subscribers, and be deployed with virtually no incremental cost impact beyond existing CPE deployment costs. All of this can be done in a manner unobtrusive to subscribers service and without requiring changes to DOCSIS bonding groups. This is important because if these probes limited or degraded service while in operation, their use would likely be designated for use only during non-peak off hours, not during times when the highest trouble ticket call volumes are typically generated! Besides the blind spot during peak network usage hours, off-hours times are also less volatile from a plant temperature standpoint, less affected by wind, and with fewer customers in their homes using LTE handsets and other forward and return noise generators intermittent problems will often not be visible during these hours. To be truly effective these new probes must operate unobtrusively and at all times of the day.

Operators are just now in the infancy of implementing systems to leverage these downstream spectrum capabilities -- if the collaborative development path use for upstream pre-eq tap usage repeats for this new downstream capability than we have just begun to comprehend the benefits that operators will realize through Full-Band Capture CPE.

What is Full-Band Capture and how does it work:

RF engineers are familiar with the swept spectrum analyzer, a ubiquitous (but expensive) piece of laboratory or field equipment wherein a resolution bandwidth (RBW) filter is swept across the signal band and the magnitude of the response (in dB) is plotted on the screen at each frequency. The result is the familiar spectrum display showing signals, interferers, noise floor, tilt, ripple, and hosts of additional information that designers and troubleshooters have learned to recognize over years of experience. More recently, spectrum analyzers have become more and more digital. In a digital spectrum analyzer, the RF signal is converted into samples in an analog-to-digital converter (ADC), then the samples are applied to a bank of digital filters (instead of sweeping a single analog RBW filter), and the response of each filter is plotted in dB. In real implementations, the fast Fourier transform (FFT) algorithm is used to compute a bank of thousands of digital filters quickly and scalably. Practically speaking, a digital spectrum analyzer may be a hybrid with some sweeping and some FFT computations.

Advances in cable modem technology have now intersected advances in digital spectrum analyzer technology. How has this happened? In the past few years, cable modems have been able to capture more and more channels with a single front end and ADC. As shown in the next figure, the first generation of digital tuners was able to capture 4 channels per tuner, and the next generation 8, 16, or 32 channels. The great breakthrough occurred in the 3rd generation, when the entire downstream cable plant from 50 MHz to over 1 GHz is now able to be captured. No tuner is in fact needed, just a wideband front end and high-speed ADC. This is full-band capture technology.

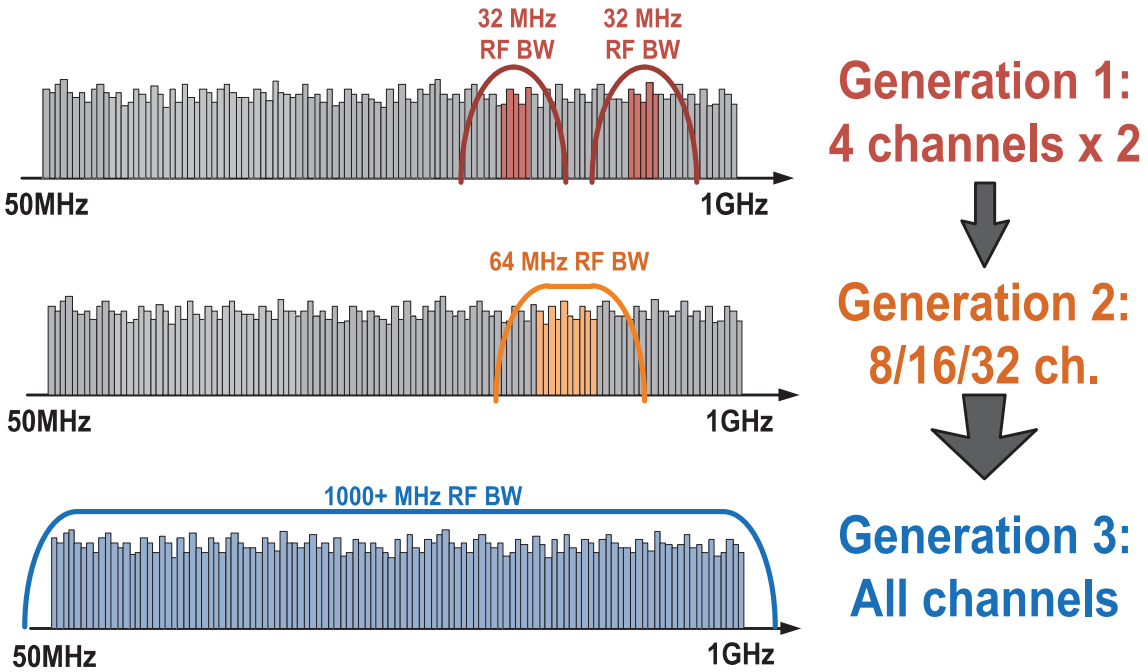

Figure 1. The entire downstream cable plant from 50 MHz to over 1 GHz is captured in a Full-Band Capture digital front end.

The next figure shows the receiver front end. After the high-speed ADC, digital mixers and filters break the signal up into desired bands, which can be routed to multiple single-channel QAM receivers, and in future DOCSIS 3.1, to wideband OFDM receivers. What silicon system designers realized was that this same diagram is the block diagram of a spectrum analyzer! That is, the wideband signal can be routed to a bank of thousands of digital filters, efficiently and scalably implemented by an FFT, and each filter output converted to dB and plotted. Suddenly the cable modem has become a wideband spectrum analyzer nearly for free.

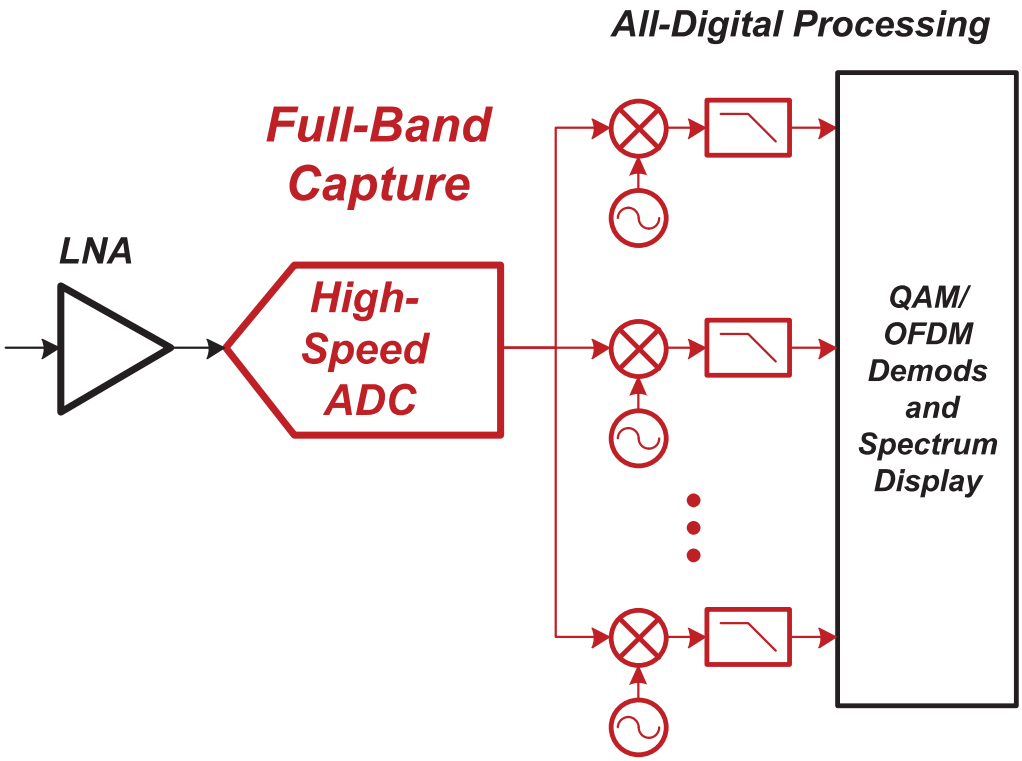

Figure 2. A Full-Band Capture front end consists of a high-speed ADC and digital filter bank.

CPE hardware breakthroughs: Enabling entry of non-traditional players into ecosystem

Beyond breakthroughs in the RF portion of Smart CPE, another recent change is the introduction of multi-core/multi-processor-based CPE. The added processing horsepower combined with massive raw RF data capture capabilities has enabled development of third-party test and measurement applications which can run directly on these devices. The general concept is to migrate core field meter functionalities into the CPE to allow remote access to the measurements that are commonly made when a technician is dispatched to troubleshoot a problem. Anytime that truck rolls can be replaced by CPE polls, time and money can be saved by cable operators and customers will be happier. This convergence of test and measurement expertise into

CPE hardware is also expanding the breadth of plant monitoring points exponentially, allowing unprecedented visibility into HFC plant health. By partnering with established test and measurement vendors with decades of expertise in measuring and monitoring HFC plants, the CPE vendors have accelerated the deployment of these capabilities into CPE as compared to developing the same capabilities from scratch internally. One example of this is shown below where MER for all downstream digital carriers can be obtained remotely from properly equipped DOCSIS devices (CM, Wireless Gateway, etc). Ingress under QAM, another popular feature on field meters from most vendors, has been migrated to the CPE in this case as well.

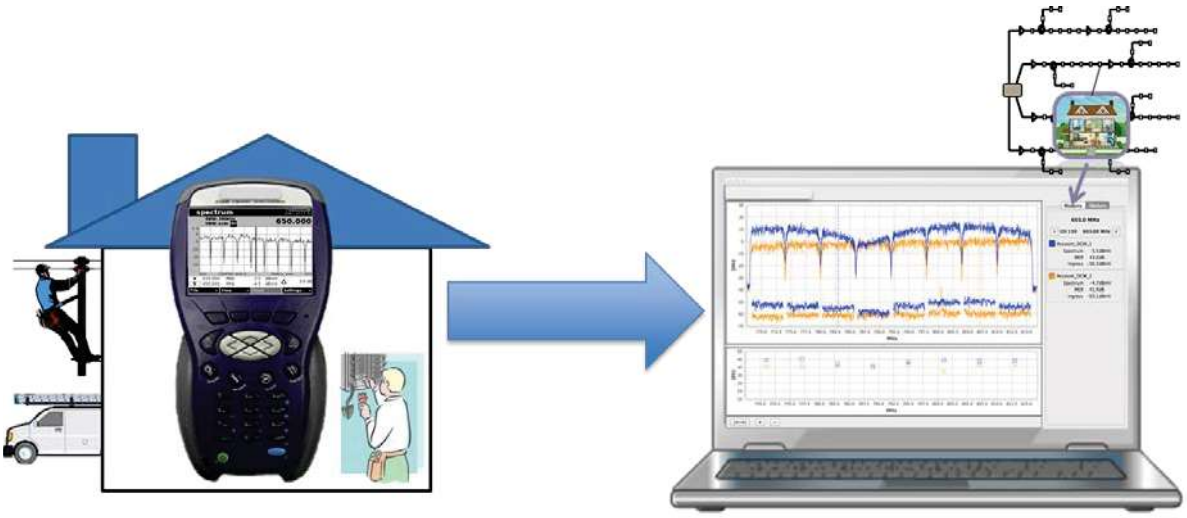

Figure 3. Migration of field meter capabilities into Smart CPE

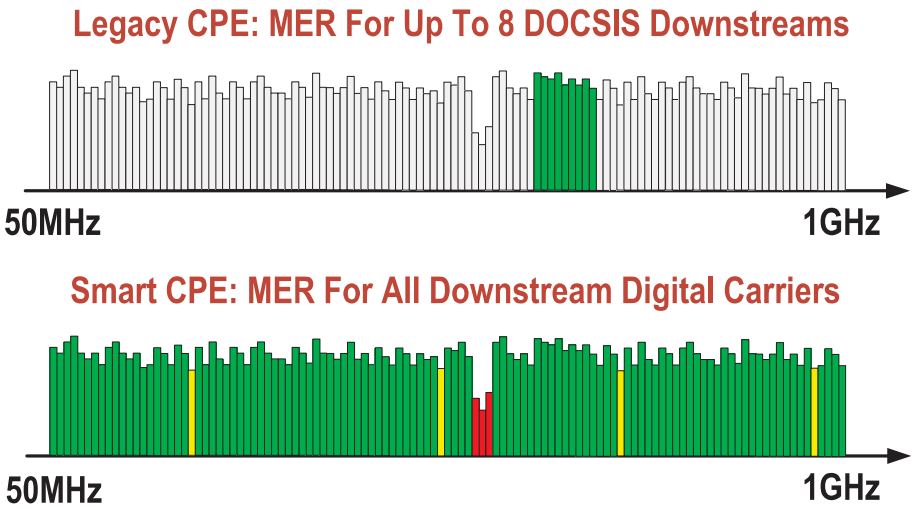

Figure 4. MER coverage of legacy CPE vs Smart CPE

The net result of migrating field meter functionalities into CPE is enabling instant 24/7 remote access to the same measurements that a technician would make if dispatched to the home or business housing each of these CPE. By leveraging the processing power of the latest Smart CPE, these capabilities can now be delivered non-intrusively. The customer sees no impact on service and no bonding changes are required while a technician is polling the CPE to troubleshoot or sectionalize issues with their service or that of their neighbors.

Expanded Support Ecosystem: Collaborative development to leverage the best and brightest folks from across Cable:

As mentioned earlier, development of systems to leverage upstream pre-equalization data from CPE started the recent resurgence in CPE polling interest. These systems could not have become what they are today without the efforts of the CableLabs Proactive Network Maintenance (PNM) working group (later renamed InGeNeOs). This group launched in 2009 and quickly focused on making the concepts of the 2008 CableLabs SCTE Expo paper reality. The PNM working group was formed by pulling together the best and brightest HFC/RF minds from cable operators, vendors, and CableLabs into an organized forum. Early on, one major MSO took the lead in this area by developing and launching an internal tool to post-process polled upstream pre-eq data and draw various charts describing the RF path from the CMTS to the polled CPE. This tool was extended to make classifications based on any one of many different measurements and plot each CPE including Red/Yellow/Green status on a map. Technicians could now eyeball areas with high "Red" modem concentrations and infer where the root of the problem may live based on comparison of affected modems to plant maps. This worked great when all Red CMs in a cluster shared the same root cause, but if multiple problems existed in close geographic proximity these results could be misleading. Discussions on this topic amongst the working group membership then led to questions about how to automate grouping of CPE with similar RF transmission path footprints instead of just by Red/Yellow/Green. One method was proposed and found to be only moderately effective in practice, but discussions on why it wasn't working well led to a suggestion of an alternative method. Sample code executing the second concept was written by one forum member between bi-weekly meetings and reviewed in the next forum gathering. One MSO implemented this new code in their production system before the next meeting and found it to be highly effective. These results were shared and as a result this base code enabling highly-effective cross-correlation has been made available to all CableLabs member organizations. In other working group meetings, success stories were shared about how distances from the RF fault to the last isolation point common to similarly affected CPE could be computed from the pre-eq data with relatively high accuracy. When these distance to fault methods were discussed, suggestions were made regarding alternative interpolation methods to further improve accuracy, and when suggestions were implemented, accuracies were increased to shockingly high levels. This collaborative innovation between industry experts and rapid turnaround times that it enabled, undoubtedly led to

a superior end product for members with active developments vs multiple parallel but isolated development efforts. The fruits of this working group's labor are available to CableLabs members in the form of a best practices document and implementation reference design.

Perhaps as important as the specific tool development discussions occurring with the working group were those about how to best operationalize and drive adoption of the new toolsets within each member's respective organization. Regardless of how powerful these new tools were, they were very different than anything that technicians were used to using. Change is hard, but by sharing what was and was not successful in driving management buy-in and technician adoption the working group members undoubtedly achieved faster acceptance of these groundbreaking new technologies than would have been possible with each person working alone.

The value of standardization of MIBS became apparent early-on in the process. For example, upstream pre-equalizer MIBs were standardized and provided reliable data from most if not all modems. Downstream equalizer information was found to be less reliable and less standardized, and this potentially valuable equalizer tap information has not been widely used thus far. A second example is the MIB for spectrum analyzer data. When the standardized MIB was adopted (replacing private vendor MIBs), features such as remote averaging of multiple spectra over time became available. This significantly reduced traffic compared to multiple reads followed by averaging in the PNM server. For example, if 15 spectra are to be averaged, 15 times less data needs to be transferred if the averaging is done in the CPE.

What can Smart CPE offer to operators today?

Now that we understand some of the history of how we got to where we are today, what does all of this mean to cable operators? How are they benefitting from the wealth of data that smart CPE can provide – how can they solve problems better than they have in the past? The quick answer is that operators are clearly benefitting some today, but we have only scratched the surface of what is possible with current capabilities, much less those that will come in the near future.

Again, to avoid overlap with other papers in this session we will not go into specific success stories that operators have achieved from upstream pre-eq-based systems but we will document an example from each end of the extremes below.

At one end of the spectrum is a small North American operator who doesn't have the development resources to implement a full-featured internal toolset leveraging upstream pre-eq information but has a few technicians savvy enough to know how to poll individual CPE and use the CableLabs reference design as-published. Using this highly manual method they can troubleshoot tricky problems that aren't easily solved using existing tools. While process is complex and time consuming, being able to see the

linear impairments that are invisible to existing toolsets other than return path monitoring systems with upstream packet demodulation capabilities can still prove invaluable in solving difficult problems for smaller operators.

At the other extreme is a major North American MSO who has fully integrated their upstream pre-eq system with their other internal systems. When a customer calls in with a problem, the automated phone system determines who they are via caller-id and polls their CPE, compares upstream pre-eq analysis results against their neighbors, and automatically makes the determination if there is a linear-impairment based problem in play and if so whether it is just the caller's home/business which is affected or if the problem is impacting others as well (i.e. a plant problem). Hours of manual analysis are performed automatically in a matter of seconds.

Both of the above examples are reactive in nature, but as pre-eq tools were born out of a working group with a proactive focus there are obviously proactive maintenance use cases as well. One example is sweep. Historically there has been a periodic ebb and flow in diligence of operators to regularly perform upstream sweep. Often the resources used to proactively sweep are easy targets to steal for reactive uses until the realization is made (yet again) that trouble tickets increase when operators stop proactive sweeping. Smart CPE can assist here by helping operators get the most out of their sweep programs. Rather than sweeping on a purely time-based schedule (every amp run once every 12-18 months has been typical), if nodes or amp runs are prioritized based on those with the worst performance as determined by upstream pre-eq analysis the nodes which will get the most value out of sweeping will always be a the top of the list. This concept can be extended to the downstream using downstream spectrum and MER provided by next-gen Smart CPE.

Another challenge facing cable operators that has been receiving a lot of press lately is LTE interference. Off-air interferers have plagued HFC operators since the beginning of cable deployment, but LTE increases these longstanding concerns in two ways. The first difference is the sheer number of interference generators. LTE transmission towers are rapidly growing in numbers (not to mention the millions of cell phones themselves), and these numbers are expected to increase rapidly as small cell and femto cell deployments start to take off.

The other difference is the increased liability cable operators face if leakage from cable systems interferes with spectrum licensed to mobile operators. The resulting FCC fines can be substantial, and mobile operators are incentivized to detect and report these cable system leaks as they can degrade the mobile service that they provide. The mobile operators paid a lot of money to license the LTE spectrum and will do whatever is necessary to ensure that they get full value from their investment. Smart CPE can help cable operators in this area in several ways. The downstream spectrum analysis capabilities can be used to detect LTE interference when it is severe enough to be seen in the carrier sidebands. MER and ingress under QAM capabilities can be used to detect lower-level LTE which doesn't readily show in carrier sidebands. Smart CPE can

also be used to help localize LTE, at a minimum determining whether LTE ingress is affecting just one home or many off of the same network element. Other off-air ingressors can also be detected and sectionalized using smart CPE -- UHF and FM interference are two common examples.

Increasing the percentage of new service adds which are fulfilled via self-installs has been a strong desire of operators wanting to reduce OPEX, but a failed self-install can lead to increased costs and ultimately losing the new subscriber prematurely. Operators are already using upstream pre-eq tap data to qualify both self-installs and managed installs, but it is expected that downstream spectrum capabilities will enhance the visibility into install quality as Full-Band Capture CPE continue to be rolled out.

By measuring MER for all carriers across the downstream band operators can detect marginal self-installs that seem to work OK but have ticking time bombs in the form of a few video carriers with poor MER. Imagine if the few bad carriers contained seldom watched programming and therefore went undetected by the subscriber until the first time that they tuned to them – like the Weather Channel when a bad storm is approaching! Much better to detect them at time of self-install and schedule a service call to address proactively instead of waiting for the customer to detect them. Ingress in the FM band can also be measured to determine homes or business with shielding faults affecting the low portions of the downstream spectrum which have the potential to be upstream ingress contributors. Plus, if an issue is impacting one customer, there is a good chance others are being affected.

Lastly, Smart CPE are being used to validate whether fixes made to the plant truly addressed the customer's complaint. This can be done today by polling the upstream pre-eq taps for high speed data related issues to determine of the RF characteristics of the CMTS→CPE transmission path have been improved. MER for DOCSIS carriers can be polled as well for a better view of service impact. In the near future polling MER for data or video downstream carriers will be used to determine if service-impacting impairments in the transmission path to the customers home or business have been addressed for video issues.

These are just a few generic examples of how Smart CPE can help cable operators. What that means to the different job classifications will be discussed in the next section.

<u>How does this affect the lives of technicians across the board?</u>

All of the opportunities to localize problems using CPE polls instead of truck rolls may seem like a threat to job security to those driving bucket trucks, but quite the contrary is likely, at least in the near-term. As long as we live in an imperfect world, cars will still hit poles, construction equipment will still dig up underground plant, squirrels will still chew hardline, and subscribers will still mangle their in-home wiring. Smart CPE won't prevent any of this from happening, but they will allow technicians to detect when these events have caused a change in plant RF performance even in cases where the

subscribers haven't been impacted (yet). In addition they will allow technicians to roll a truck very close to the source of the impairment instead of driving around for hours to find it. Technicians will still be needed, but instead of being in constant fire-drill mode reacting to customer tickets they can begin spending more of their time addressing plant weaknesses before customers complain or even before they see issues. This shift from reactive to proactive must happen if we are to cost-effectively continue offering increasingly complex services and meet the ever-increasing quality expectations of customers who remind us frequently that they have other choices for their data/voice/video needs.

Installers' and Service Techs' lives will be changed by Smart CPE as well. Operators are expected to increase the percentage of new service adds and services that are fulfilled via self-install as they gain increased confidence in their ability to assess the quality of the customer's experience after the self-install. If the operators are confident that they will be able to detect service-impacting issues in the drop to the home via Smart CPE and notify the customer proactively that a technician will be dispatched to address it at their convenience, any potential for dissatisfaction will be greatly reduced compared to the customer's detecting the problem and complaining. Delegating the simpler installations to the self-install model frees up service techs' time to be spent on addressing just those self-installs which require follow-up remediation and on the more lucrative triple play and home security/monitoring installs. As Smart CPE evolve and absorb more and more field meter capabilities technicians will be able to save time by only hooking up their field meters at the final CPE location if the tests run by the CPE themselves fail. They will also have better evidence that their installs were truly effective – measurements will be taken on the customer's actual CPE instead of the field meter eliminating the blind spot of the CPE itself that existed previously.

But what about folks who rarely if ever physically touch the HFC plant? It is expected that intelligent application of Smart CPE data into a format consumable by Customer Service Representative (CSR)/Tier I personnel will allow gains in efficiency and customer satisfaction. If a customer calls in with video tiling, the CSR's have tools today to poll the customer's STB for SNR on the specific carrier that it is tuned to at the time of polling, but unfortunately they don't have visibility into that same carrier for any of their neighbors to make an accurate single-home vs plant problem decision unless it is tuned to the same carrier. Smart CPE provide the ability to poll any downstream digital carrier for MER regardless of which carrier the CPE is currently tuned to, allowing accurate dispatch of service techs vs maintenance techs. Making this dispatch decision earlier can not only reduce MTTR, will increase customer satisfaction, and save operators OPEX by reducing throw-away truck rolls resulting from incorrect dispatches. The results to-date are encouraging: operators who have made upstream pre-eq data available to assist the single-home vs plant problem dispatch decision process (manual or automated) have seen tremendous gains in efficiency. Adding downstream ingredients into this mix will only increase the gains.

NOC groups are always hungry for more data *provided that it is terse and actionable*. Smart CPE are a double-edged sword for this group as while they increase visibility into parts of the plant that traditionally have been a significant blind spot – inside the customer's home or business – the massive number of added monitoring points also add massive overhead for polling and analysis of data. The ecosystem that has been built to convert moderate quantities of upstream pre-eq data into actionable information has helped this challenge, but the addition of downstream data will pose a new set of challenges and opportunities to the NOC group. More on this topic in the next section.

Technical Operations Management roles have been forever changed by Smart CPE in forward-thinking operations which have adopted them. Metrics derived from upstream pre-eq data have augmented or replaced more reactive metrics driving performance evaluations and resulting employee compensation decisions. Examples of how upstream pre-eq data and charts have been integrated into standard management reports across multiple large cable operators have been shown in PNM meetings, emphasizing their importance and reinforcing management buy-in to these systems. The addition of proactive metrics into maintenance prioritization and technician evaluation processes can help facilitate an overall shift in mindset for the entire organization from reactive focus to proactive. We can't be so naive as to think that just adding a few new metrics and measuring performance against them alone will make this shift possible, but they are certainly helpful enablers.

Where may Smart CPE go from here?

Wow – we have come a long way in the past few years with better utilizing CPE deployed throughout our plants as remote monitoring probes, but have we reached limit of what we can do with these devices and the systems that leverage data from them? The answer is an unequivocal NO! We have just scratched the surface of how Smart CPE and their supporting ecosystem can improve HFC deployment, monitoring, maintenance, and troubleshooting processes.

As mentioned previously, Smart CPE present a double-edged sword to cable operators. As they become equipped to capture more and more data, the demands on the systems that poll and analyze this data grow rapidly.

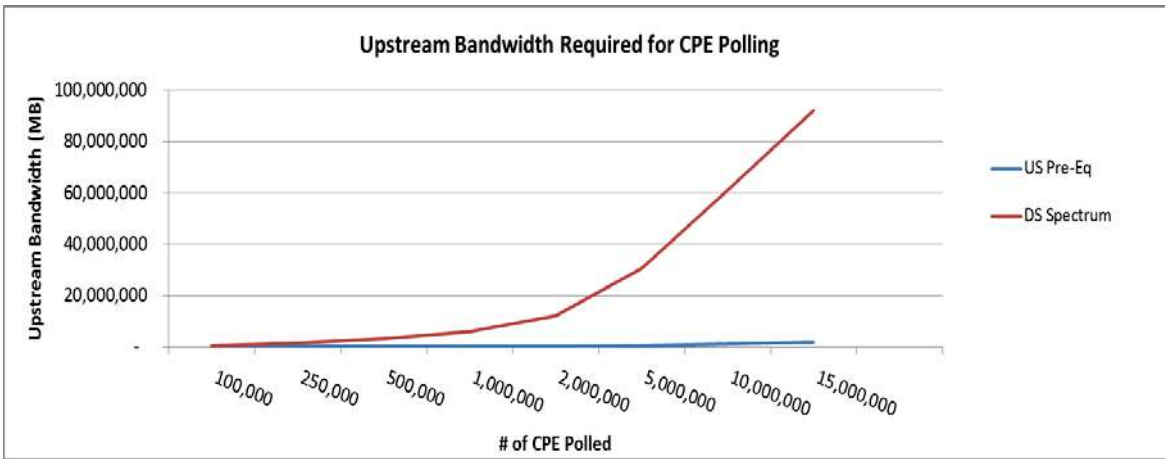

Figure 5. Upstream bandwidth requirements by information type

One trend that is just now emerging and is expected to accelerate is the distribution of intelligence and data processing loading from centralized systems out to the CPE. As processing power of Smart CPE increases so does their ability to capture and process data on-board and only send back actionable data to centralized systems. The illustration below demonstrates the two possible approaches to managing the massive amount of data that will be available from Smart CPE in the near future.

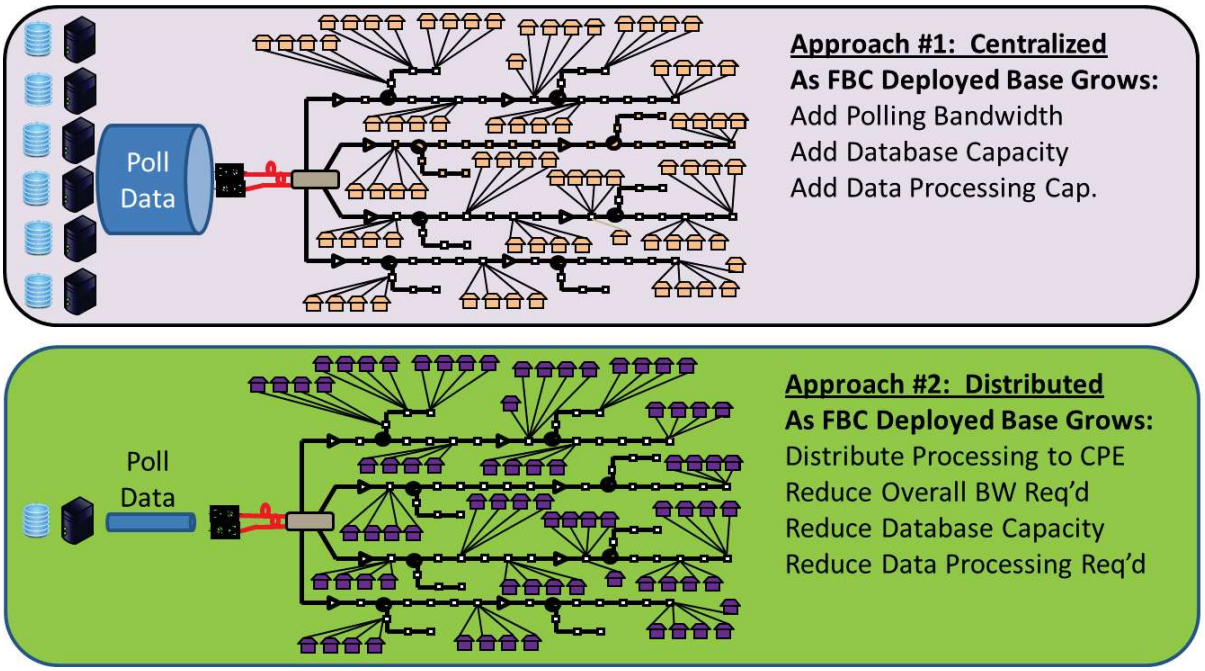

Figure 6. Different approaches to address upcoming polling bandwidth requirements

While each approach has pros and cons, the distributed processing model appears to be much more scalable and sustainable. This would represent a major paradigm shift in CPE polling – moving from a polling system-initiated to a probe-initiated model for

monitoring data collection. This practice has been in place for some time in other monitoring systems so it is not completely new to traditional consumers of polled CPE data.

Once Smart CPE can serve as always-on distributed monitoring probes, many benefits can be obtained. Starting with reactive use cases, if RF characteristics can be captured at the same moment in time service-layer metrics are impacted, the troubleshooting of intermittent issues can be made easier. If Smart CPE are programmed to capture a snapshot and store it locally and/or send an SNMP trap upon a pre-defined occurrence, the captured data could have significant forensic value. If for example in a single home, a video carrier in the LTE band occasionally experiences drops in MER (and possibly exhibits tiling of video display as a result) and the Smart CPE snapshot driven by the reduced MER also consistently captures ingress under the QAM this could point to ingress from an LTE handset in the home as a likely cause.

Another possibility is the extension of pre-eq tap information to the downstream. As downstream capabilities of Smart CPE increase, it is conceivable that equalizer taps will be made available for all 100+ downstream channels that can be leveraged in a similar way that upstream channels are leveraged today.

It is reasonable to expect that capabilities traditionally residing in field meters will continue to migrate into CPE. By providing remote access to the same information that previously required a technician in the home with a meter to capture, customer satisfaction can be improved and OPEX reduced. We are not suggesting that Smart CPE will eliminate the need for field meters; they will still be a critical part of the final find-and-fix portion of HFC maintenance processes.

Another major trend to watch could warrant a separate paper unto itself, TR-069. As this standard gains adoption in cable, MSOs will gain much better visibility into what is happening inside of the home, even downstream of the CPE themselves. Industry experts suggest that >70% of broadband service issues derive from within the home, and right or wrong, the time and cost spent addressing and resolving these issues (in addition to the customer's perception) falls upon he broadband service providers. For this reason, as we have seen with the global adoption of the Broadband Forum TR-069 suite, operators have embraced the philosophy of deploying centrally managed, intelligent CPE into the home in order to gain much better control and visibility. This approach to centrally managed, standards-based intelligent CPE enables the operators to efficiently provision and configure the CPE, to provide centralized version control and ongoing performance monitoring. By combining the customer-experience-based key performance indicators (KPI) from these intelligent CPE together with other KPIs from the broadband network itself (physical layer based), the operators can work from a more comprehensive baseline in order to perform proactive and reactive management of the entire broadband service. It is expected that these two data sets will eventually converge, initially via data analysis systems post-processing polled data and potentially in software test clients running on the CPE themselves at some point in the future.

Perhaps most exciting is the opportunity we have now to take everything that we have learned about how CPE can help us in HFC maintenance and troubleshooting and apply it proactively to the next generation of DOCSIS. Instead of limiting our thinking to what data is available from CPE today, the best and brightest are now brainstorming what we would do if we could have anything that we wanted from CPE and writing that into proposals to bounce off of the different DOCSIS 3.1 working groups for feasibility analysis. Also gone is the paradigm that CPE and CMTS have to provide data independently; there are opportunities for breakthrough capabilities when the two work in concert to provide diagnostic information.

The next figure shows this vision. Just as we would characterize or troubleshoot a device on the bench, we can now connect virtual "test equipment" in the form of Smart CPE to the Device Under Test (DUT), which is the cable plant. As shown in the figure, with proper design we can include test points in the CPE and CMTS that provide the essential functions of a network analyzer, spectrum analyzer, and vector signal analyzer (VSA). The result will be unparalleled visibility giving the capability to remotely monitor and troubleshoot the cable plant and equipment.

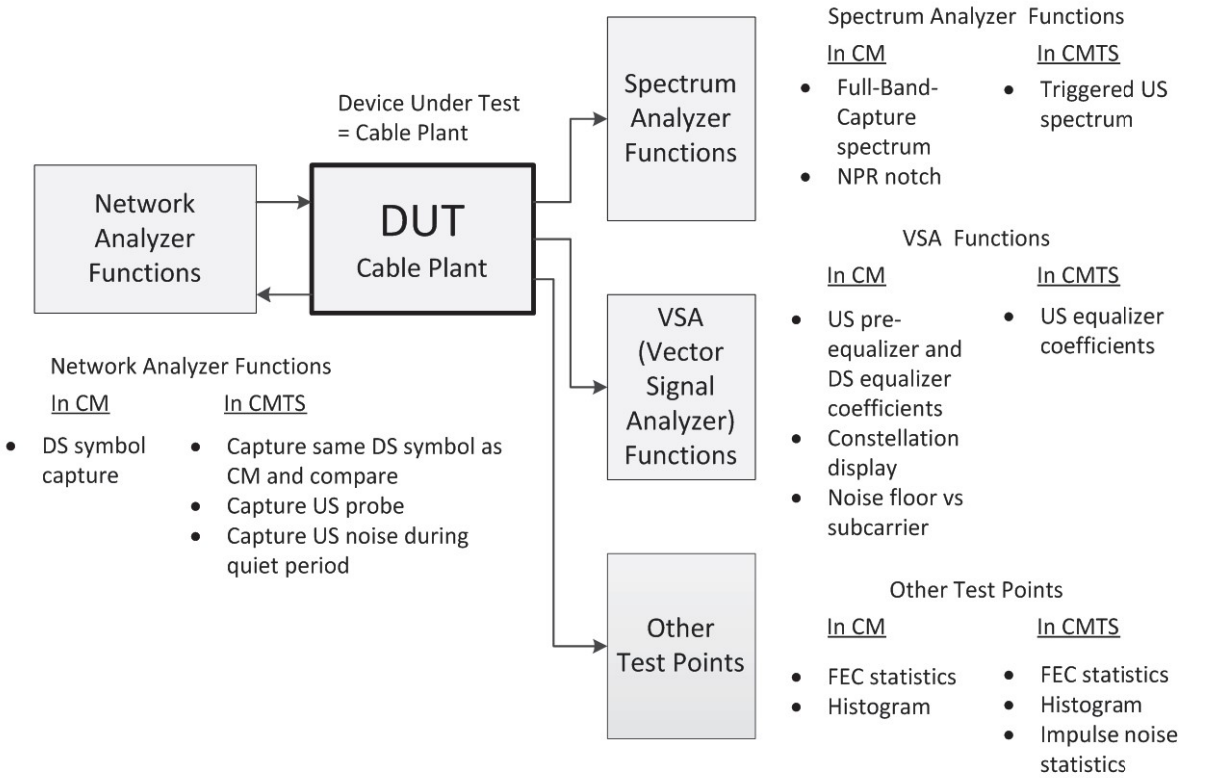

Figure 7. Smart CPE and CMTS can provide essential functions of a network analyzer, spectrum analyzer and VSA to troubleshoot the cable plant.

HFC maintenance and troubleshooting as we know them have been changed significantly in the past few years due to the previously unheard-of capabilities delivered by Smart CPE and the ecosystem that supports them. The pre-equalization revolution was the catalyst driving the step-change that we are experiencing today, and the continued development of increasingly Smarter CPE, including the required hooks in upcoming DOCSIS protocols, will continue to drive their growth in value to HFC operators. While a few in the media and investment community have been awaiting the demise of HFC technology, Smart CPE may be a significant part of the solution that extends the life of this tried-and-true distribution method as a cost-effective solution well into the future. Chances are that if you work for a cable operator your life has already or soon will change in some way due as a result of Smart CPE. Exciting times lie ahead -- as the rapid pace of Smart CPE evolution is expected to continue, cable operators who embrace these changes will reap the benefits.

Bibliography

Resource 1:
A Novel Approach To Troubleshooting Linear Distortions By Ron Hranac, Senior Technology
Editor http://www.cablefax.com/tech/sections/columns/broadband/43310.html

Resource 2:
SCTE 40, 2011 Digital Cable Network Interface Standard
http://www.scte.org/documents/pdf/standards/SCTE_40_2011.pdf

Resource 3:
Full-Band Capture Cable Digital Tuning
http://www.broadcom.com/collateral/wp/3128-WP100.pdf

Resource 4:
CableLabs DOCSIS Best Practices and Guidelines
http://www.cablelabs.com/specifications/CM-GL-PNMP-V02-110623.pdf

Resource 5:
Agilent Spectrum Analyzer Basics
http://literature.agilent.com/litweb/pdf/5965-7920E.pdf