SCTE · ISBE

STANDARDS

Interface Practices Subcommittee

AMERICAN NATIONAL STANDARD

ANSI/SCTE 06 2019

Composite Distortion Measurements (CSO & CTB)

ENTROPIC EXHIBIT 2018
Comcast v. Entropic
IPR2024-00441

NOTICE

The Society of Cable Telecommunications Engineers (SCTE) / International Society of Broadband Experts (ISBE) Standards and Operational Practices (hereafter called "documents") are intended to serve the public interest by providing specifications, test methods and procedures that promote uniformity of product, interchangeability, best practices and ultimately the long-term reliability of broadband communications facilities. These documents shall not in any way preclude any member or non-member of SCTE•ISBE from manufacturing or selling products not conforming to such documents, nor shall the existence of such standards preclude their voluntary use by those other than SCTE•ISBE members.

SCTE•ISBE assumes no obligations or liability whatsoever to any party who may adopt the documents. Such adopting party assumes all risks associated with adoption of these documents, and accepts full responsibility for any damage and/or claims arising from the adoption of such documents.

Attention is called to the possibility that implementation of this document may require the use of subject matter covered by patent rights. By publication of this document, no position is taken with respect to the existence or validity of any patent rights in connection therewith. SCTE•ISBE shall not be responsible for identifying patents for which a license may be required or for conducting inquiries into the legal validity or scope of those patents that are brought to its attention.

Patent holders who believe that they hold patents which are essential to the implementation of this document have been requested to provide information about those patents and any related licensing terms and conditions. Any such declarations made before or after publication of this document are available on the SCTE•ISBE web site at http://www.scte.org.

All Rights Reserved

© Society of Cable Telecommunications Engineers, Inc. 2019
140 Philips Road
Exton, PA 19341

Table of Contents

Title **Page Number**

NOTICE 2

Table of Contents 3
1. Introduction 4
   1.1. Executive Summary 4
   1.2. Scope 4
   1.3. Benefits 4
   1.4. Intended Audience 4
   1.5. Areas for Further Investigation or to be Added in Future Versions 4
2. Normative References 5
   2.1. SCTE References 5
   2.2. Standards from Other Organizations 5
   2.3. Published Materials 5
3. Informative References 5
   3.1. SCTE References 5
   3.2. Standards from Other Organizations 5
   3.3. Published Materials 5
4. Compliance Notation 6
5. Abbreviations and Definitions 6
   5.1. Abbreviations 6
   5.2. Definitions 7
6. Equipment 7
7. Set-Up 9
   7.1. Connect the test equipment as shown in Figure 1 9
8. Procedure 9
   8.1. To measure CSO 10
   8.2. Compute the Corrected CSO for each product 11
   8.3. To measure CTB 11
   8.4. Compute Corrected CTB 11

appendix A: Frequency Randomization 12

List of Figures

Title **Page Number**

Figure 1 – Test Equipement Set-up 9

List of Tables

Title **Page Number**

Table 1 - Spectrum Analyzer Settings 9

1. Introduction

1.1. Executive Summary

Cable systems are traditionally comprised of multiple analog channels with an even frequency spacing between channels. When this channel lineup passes through devices in the cable plant, especially active devices, distortion products are generated which interfere with the analog channels.

With multiple, evenly spaced channels, the second and third order distortion products combine and add at constant frequencies across the band around and on top of the channel frequencies themselves, creating composite second order (CSO) and composite third order (CTB) distortion products.

Having a standard consistent method of measuring the CSO and CTB distortion products allows system operators a method of setting standard performance criteria for the individual components, and vendors a method of validating the performance of their products. A standard method of measurement is critical in determining the distortion of individual components and the end to end performance of the complete cable plant.

1.2. Scope

This document describes a test procedure for the laboratory and production measurement of composite distortion products. There are two types of composite distortions considered: Composite Second Order and Composite Triple Beat. In order to obtain a stable, repeatable measurement, this test procedure describes testing performed with continuous wave (CW) carriers. See ANSI/SCTE 96 2008 for a discussion of the selection of CW carrier frequencies.

1.3. Benefits

Test Procedure for Composite Distortion Measurements (CSO & CTB), when executed per this procedure, will yield accurate and consistent CSO and CTB characteristics, for the device under test. Use of this test method provides user a means to verify manufacturer test reports and certificates of compliance when available. When industry utilizes a standard test method, especially for CSO and CTB parameters, comparative analysis is more accurate.

1.4. Intended Audience

The intended audience for this test method, are manufactures and end-users with proper laboratories and equipment to perform this test..

1.5. Areas for Further Investigation or to be Added in Future Versions

At this time, there are no considerations being giving for further investigation.

2. Normative References

The following documents contain provisions, which, through reference in this text, constitute provisions of this document. At the time of Subcommittee approval, the editions indicated were valid. All documents are subject to revision; and while parties to any agreement based on this document are encouraged to investigate the possibility of applying the most recent editions of the documents listed below, they are reminded that newer editions of those documents might not be compatible with the referenced version.

2.1. SCTE References

- SCTE 96 2014 Cable Telecommunications Testing Guidelines

2.2. Standards from Other Organizations

- No normative references are applicable.

2.3. Published Materials

- No normative references are applicable.

3. Informative References

The following documents might provide valuable information to the reader but are not required when complying with this document.

3.1. SCTE References

- No informative references are applicable.

3.2. Standards from Other Organizations

- No informative references are applicable.

3.3. Published Materials

- Conference on Emerging Technologies Proceedings Manual, Schick, D. and McQuillen, E., Society of Cable Telecommunications Engineers, 1998, pg. 255.

4. Compliance Notation

shall	This word or the adjective "***required***" means that the item is an absolute requirement of this document.
shall not	This phrase means that the item is an absolute prohibition of this document.
forbidden	This word means the value specified shall never be used.
should	This word or the adjective "*recommended*" means that there may exist valid reasons in particular circumstances to ignore this item, but the full implications should be understood and the case carefully weighted before choosing a different course.
should not	This phrase means that there may exist valid reasons in particular circumstances when the listed behavior is acceptable or even useful, but the full implications should be understood and the case carefully weighed before implementing any behavior described with this label.
may	This word or the adjective "*optional*" means that this item is truly optional. One vendor may choose to include the item because a particular marketplace requires it or because it enhances the product, for example; another vendor may omit the same item.
deprecated	Use is permissible for legacy purposes only. Deprecated features may be removed from future versions of this document. Implementations should avoid use of deprecated features.

5. Abbreviations and Definitions

5.1. Abbreviations

BPF	bandpass filter
CSO	composite second order
CTB	composite triple beat
dB	decibel
dBc	decibel carrier
DSO	discrete second order
DTO	discrete third order
DUT	device under test
Hz	hertz
ISBE	International Society of Broadband Experts
kHz	kilohertz
MHz	megahertz
SA	spectrum analyzer
SCTE	Society of Cable Telecommunications Engineers
VBW	video bandwidth

5.2. Definitions

Discrete Second Order (DSO)	An individual, second order intermodulation product, produced when one or two carriers pass through a non-linear component.
Composite Second Order (CSO):	The sum of all DSO products that happen to fall at the same nominal frequency in a multi-tone system. CSO is defined as the difference, in dB, between the rms voltage of the carrier measured at its peak and the rms voltage of this sum. This procedure describes a technique for measuring this difference using a spectrum analyzer (SA) in the LOG mode. For consistency with existing measurements and specifications, the results of measurements made using any other technique must be correlated with the results from this technique.
Discrete Third Order (DTO)	An individual, third order intermodulation product, produced when one, two or three carriers pass through a non-linear component.
Composite Triple Beat (CTB)	The sum of all DTO products in a multi-tone system that happen to fall at the same nominal frequency in a multi-tone system. CTB is defined as the difference, in dB, between the rms voltage of the carrier measured at its peak and the rms voltage of this sum. As with CSO, this procedure describes a technique for measuring this difference using a SA in the LOG mode. For consistency with existing measurements and specifications, the results of measurements made using any other technique must be correlated with the results from this technique.

6. Equipment

The general equipment required for this test is shown in Figure 1. SCTE 96 describes and specifies all of this equipment.

The multi-tone signal generator for this test must have the characteristics listed below. Refer to SCTE 96 for specifications of acceptable generators.

The capability to produce signals on all the nominal visual carrier frequencies for all of the channels in the frequency band to be tested.

The capability to set power levels individually and to adjust the total spectrum of input signals to the proper input power level for the device to be tested.

The capability to turn individual channels off.

For testing with noncoherent carrier frequencies, the capability to maintain individual noncoherent frequencies to within ±5 kHz of the nominal carrier frequencies. Note that stable and accurate carrier frequencies are critical to ensure repeatable measurements. Refer to Appendix A for a discussion of this issue.

Spurious signals generated within the signal source device(s) must be at least 10 dB below the levels to be measured. Note that if the internal CSO or CTB of the signal source(s) is produced in a way similar to the CSO or CTB of the Device Under Test (DUT), the internal CSO or CTB products must be at least 20 dB below the levels to be measured.

The band pass filters (BPF) for this test must meet the specifications listed in SCTE 96.

7. Set-Up

Follow all calibration requirements recommended by the manufacturers of the signal generators and SA, including adequate warm-up and stabilization time.

7.1. Connect the test equipment as shown in Figure 1.

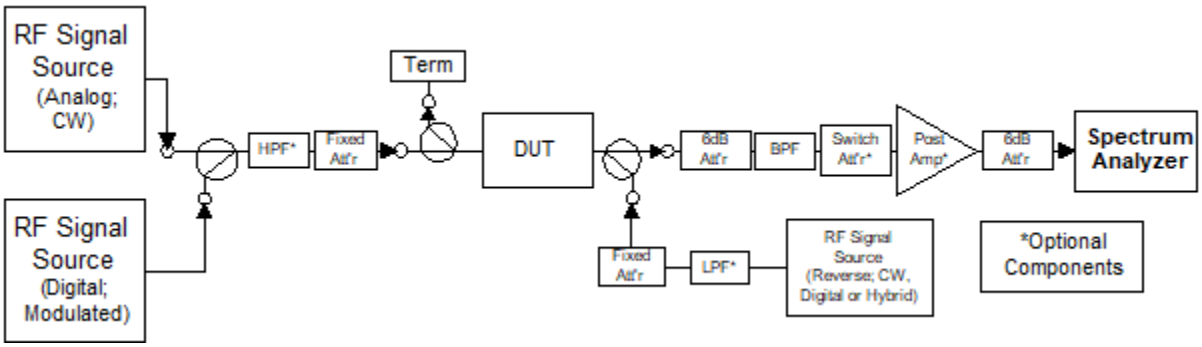

Figure 1 – Test Equipement Set-up

Set the signal generators to provide all of the signals needed for the test, as defined by the applicable frequency plan. The analog carrier frequencies for noncoherent frequency plans should be randomly dispersed with a ± 5 kHz distribution about the nominal visual carrier frequencies, in order to obtain the most stable, repeatable measurement. The advantages of this dispersion are explained in Appendix A.

If appropriate, power the DUT in a manner consistent with its use. Note that the DUT may consist of a single device or a group of devices connected together as a system.

Set the appropriate signal level for each carrier, using the techniques described in SCTE 96.

8. Procedure

Adjust the BPF so that its passband response is centered on the carrier to be measured. Set the SA to the settings indicated in Table 1.

Table 1 - Spectrum Analyzer Settings

Center Frequency	Carrier Frequency under test
Span:	3 MHz (300 kHz/div.)
Detector	Peak
Resolution Bandwidth	30 kHz
Video Bandwidth	30 Hz
Input Attenuation	≥ 10 dB
Vertical Scale	10 dB/div.

The span shown above is chosen so that all of the distortion products may be measured on one display. It is equally acceptable to reduce the span to 100 kHz and change the center frequency, when appropriate, to the location of each of the distortion products to be measured. Note that a lower video bandwidth and video averaging may be used to obtain a more stable measurement. The video bandwidth should be set as low as possible and the video averaging repetitions as high as tolerable to achieve the required measurement stability in the shortest measurement time possible. Also, the SA input attenuation may be manually set to 0 dB to improve the dynamic range of the measurement, but only when one can be certain that the SA will not be overdriven.

Set the SA marker to the peak of the carrier signal. If the carrier level is high enough to cause gain compression in the SA, adjust the optional external attenuator until the carrier level is within the linear range of the SA's input. Record the marker level as Carrier Level.

8.1. To measure CSO

For a "Standard" frequency plan (as defined by SCTE 96), the forward path CSO products are typically located at ±0.75 MHz and ±1.25 MHz from the frequency of the carrier under test. The CSO products at channels 5 and 6 are located + 0.75 MHz, + 1.25 MHz, + 2.75 MHz and +3.25 MHz from the carrier, due to the 2 MHz offsets of those carrier frequencies. Note that other frequency plans may produce CSO products at different frequencies. The reverse path CSO products are located at ±1 MHz from the frequency of the carrier under test for most reverse path testing currently performed using the standard "T channels."

The CSO measurement must be made for each of the major distortion products at each measured frequency. For example, with the Standard frequency plan, a CSO measurement at 211.25 MHz will consist of measurements of the CSO products at 210 MHz, 210.5 MHz, 212 MHz and 212.5 MHz.

It is recommended that the carrier be turned off. For frequency plans where the CSO products are located at the carrier frequency, the carrier must be turned off.

- Use the SA marker to measure the maximum level of the CSO products of interest. Record the marker level of each product as CSO Level.
- Record the Noise Floor Level as the level of the noise floor in a flat portion of the spectrum displayed on the SA.
- Compute Noise Floor Delta = CSO Level – Noise Floor Level.

If the Noise Floor Delta is less than 2 dB, it is recommended that the optional post-amplifier be added to the system. The measurement should then be made again. If, however, the Noise Floor Delta remains less than 2 dB, refer to SCTE 96, Section 8.2 for the proper Noise-Near-Noise Correction.

If the Noise Floor Delta is greater than 2 dB, the following Noise Floor Correction Factor should be calculated:

$$\textit{Noise Floor Correction Factor}: 10 * \left| \log\left(1 - 10^{-\left(\frac{\text{Noise Floor Delta}}{10}\right)} \right) \right|$$

8.2. Compute the Corrected CSO for each product

Corrected CSO *= Carrier Level – CSO Level + Noise Floor Correction Factor*

Note that this is a positive number, expressed in –dBc. Refer to the Definitions and Acronyms section of SCTE 96 for a discussion of these units.

8.3. To measure CTB

For a "Standard" frequency plan (as defined by SCTE 96), the forward path CTB products are located at the frequency of the carrier under test. The CTB products at channels 5 and 6 are located 2 MHz higher in frequency, due to the 2 MHz offsets of those carrier frequencies. Note that other frequency plans may produce CTB products at different frequencies.

- Turn off the carrier under test.
- Use the SA marker to measure the maximum level of the CTB product of interest. Record the marker level as CTB Level.
- Record the Noise Floor Level as the level of the noise floor in a flat portion of the spectrum displayed on the SA.

Compute Noise Floor Delta = CTB Level – Noise Floor Level.

If the Noise Floor Delta is less than 2 dB, it is recommended that the optional post-amplifier be added to the system. The measurement should then be made again. If, however, the Noise Floor Delta remains less than 2 dB, refer to SCTE 96, Section 8.2 for the proper Noise-Near-Noise Correction.

If the Noise Floor Delta is greater than 2 dB, the following Noise Floor Correction Factor should be calculated:

$$\text{Noise Floor Correction Factor:} \quad 10 * \left| \log\left(1 - 10^{-\left(\frac{\text{Noise Floor Delta}}{10}\right)} \right) \right|$$

A table of values calculated from this equation is presented in SCTE 96 2013, Section 8.2

8.4. Compute Corrected CTB

Corrected CTB *=Carrier Level – CTB Level + Noise Floor Correction Factor*

Note that this is a positive number, expressed in –dBc. Refer to the Definitions and Acronyms section of SCTE 96 for a discussion of these units.

Turn on the carrier under test.

APPENDIX A: FREQUENCY RANDOMIZATION

Frequency randomization (refer to Section 6.3) will serve to minimize both random and repeatable errors.

Random errors can be produced because; depending on the signal generator alignment, some of the DSO or DTO products may fall very close together in frequency. These individual products will form a CSO or CTB product that contains low frequency variations, or beats. If the frequencies of these beats fall within the measurement's video bandwidth (VBW), they will cause apparently random variations from one measurement to the next. The occurrence of such low frequency beats is minimized by dispersing the frequencies of the DSO or DTO products. The individual distortion products may be spread out in this way by intentionally dispersing the noncoherent carrier frequencies with known offsets.

Repeatable errors can also be produced because, again depending on the alignment of the analog carrier frequencies, some of the DSO or DTO products may be separated in frequency by more than the 30 kHz IF bandwidth of the measurement. If this happens, the full power of all of the distortion products will not be measured at once. As a result, the measured composite distortion will be artificially improved. These effects are minimized by restricting each analog carrier frequency to within ± 5 kHz of its nominal frequency.

Both the random and repeatable errors can be minimized by dispersing the noncoherent carrier frequencies with known offsets over a ± 5 kHz range. The most repeatable results will be achieved if these carrier frequency offsets have a uniform probability distribution.

The beneficial effects of frequency randomization are more completely described in "CTB/CSO Measurement Repeatability Improvements Using Uniformly Distributed Noncoherent Carrier Frequencies," by McQuillen and Schick. This paper was published by the SCTE in the 1998 Conference on Emerging Technologies Proceedings Manual.