Trials@uspto.gov
571-272-7822

Paper 31
Date: September 3, 2025

UNITED STATES PATENT AND TRADEMARK OFFICE

BEFORE THE PATENT TRIAL AND APPEAL BOARD

COMCAST CABLE COMMUNICATIONS, LLC,
Petitioner

v.

ENTROPIC COMMUNICATIONS, LLC,
Patent Owner.

IPR2024-00441
Patent 8,792,008 B2

Before JON M. JURGOVAN, SCOTT B. HOWARD, and AARON W. MOORE, *Administrative Patent Judges*.

MOORE, *Administrative Patent Judge*.

JUDGMENT
Final Written Decision
Determining All Challenged Claims Unpatentable
35 U.S.C. § 318(a)

TABLE OF CONTENTS

I. BACKGROUND 3
A. Related Matters 3
B. The ’008 Patent 4
C. Challenged Claims 6
D. Asserted Grounds 7
II. ANALYSIS 7
A. Level of Ordinary Skill in The Art 7
B. Claim Construction 8
C. Obviousness: Kamieniecki and Konstantinos 9
1. Kamieniecki 9
2. Konstantinos 10
3. Motivation to Combine 12
a. The Experience Level of One of Ordinary Skill 12
b. Whether One Would Add Konstantinos’ Multi-Channel Receiver to Kamieniecki 16
c. Whether the Combination Would Fundamentally Alter the Operation or Render Inoperable 18
d. Conclusion Regarding Motivation to Combine 21
4. Allegedly Missing Elements 22
a. “Analyze Said Digitized Signal to Determine a Characteristic of Said Digitized Signal” 22
b. “Concurrently Output” 24
c. Customer Premises Gateway 26
5. Objective Indicia of Non-Obviousness 28
6. Conclusion as to Kamieniecki and Konstantinos 33
D. Obviousness: Renken 33
1. Renken 34
2. Renken as Prior Art 36

III. CONCLUSION.....37
IV. ORDER.....38

I. BACKGROUND

Comcast Cable Communications, LLC ("Petitioner") filed a Petition (Paper 2, "Pet.") requesting an *inter partes* review ("IPR") of claims 1–18 of U.S. Patent No. 8,792,008 B2 (Ex. 1001, "the '008 patent"). Entropic Communications, LLC ("Patent Owner") filed a Preliminary Response (Paper 7).

The Board instituted *inter parties* review on September 5, 2024 (Paper 8, "Inst. Dec."), Patent Owner filed a Response (Paper 15, "PO Resp."), Petitioner filed a Reply (Paper 19, "Pet. Reply"), and Patent Owner filed a Sur-reply (Paper 23, "PO Sur-reply").

We held a hearing on June 6, 2025, and a transcript of the hearing is included in the record, as are the demonstratives. *See* Paper 30 ("Tr."); Ex. 1034 (Petitioner Demonstratives); Ex. 2022 (Patent Owner Demonstratives).

We issue this Final Written Decision under 35 U.S.C. § 318(a) and 37 C.F.R. § 42.73 and, for the reasons that follow, determine that Petitioner has shown, by a preponderance of the evidence, that claims 1–18 are unpatentable.

A. Related Matters

The parties indicate that the '008 patent is presently at issue in the following matters: *Entropic Communications, LLC v. Cox Communications, Inc.*, No. 2:23-cv-01049-JWH-KES (C.D. Cal.); and *Entropic Communications, LLC v. Comcast Corporation*, No. 2:23-cv-01050-JWH-KES (C.D. Cal.). Pet. 6–7; Paper 4, 1.

The parties also indicate that the '008 patent was previously at issue in the following matters: *Entropic Communications, LLC v. DIRECTV, LLC*, No. 2:22-cv-07775-JWH-KES (C.D. Cal.); *Entropic Communications, LLC v. DISH Network Corporation*, No. 2:22-cv-07959-JWH-KES (C.D. Cal.); *Entropic Communications, LLC v. Charter Communications, Inc.*, No. 2:22-cv-00125-JRG

(E.D. Tex.); and *Dish Network Corporation v. Entropic Communications, LLC*, IPR2023-00393 (PTAB) (institution denied). Pet. 7–8; Paper 4, 1–2.

Patent Owner identifies the following as patents related to this proceeding: U.S. Patent No. 9,203,653; U.S. Patent No. 9,825,826; U.S. Patent No. 10,063,436; and U.S. Patent No. 10,439,911. Paper 4, 2. Patent Owner also identifies several other patents asserted by Patent Owner, and *inter partes* reviews sought by Petitioner against other patents of Patent Owner. *Id.* at 2–3.

B. The '008 Patent

The '008 patent, titled "Method and Apparatus for Spectrum Monitoring," issued on July 29, 2014, with claims 1–18. The patent claims priority to U.S. Provisional Application No. 61/532,098, filed September 8, 2011.

Figure 1A of the '008 patent is reproduced below.

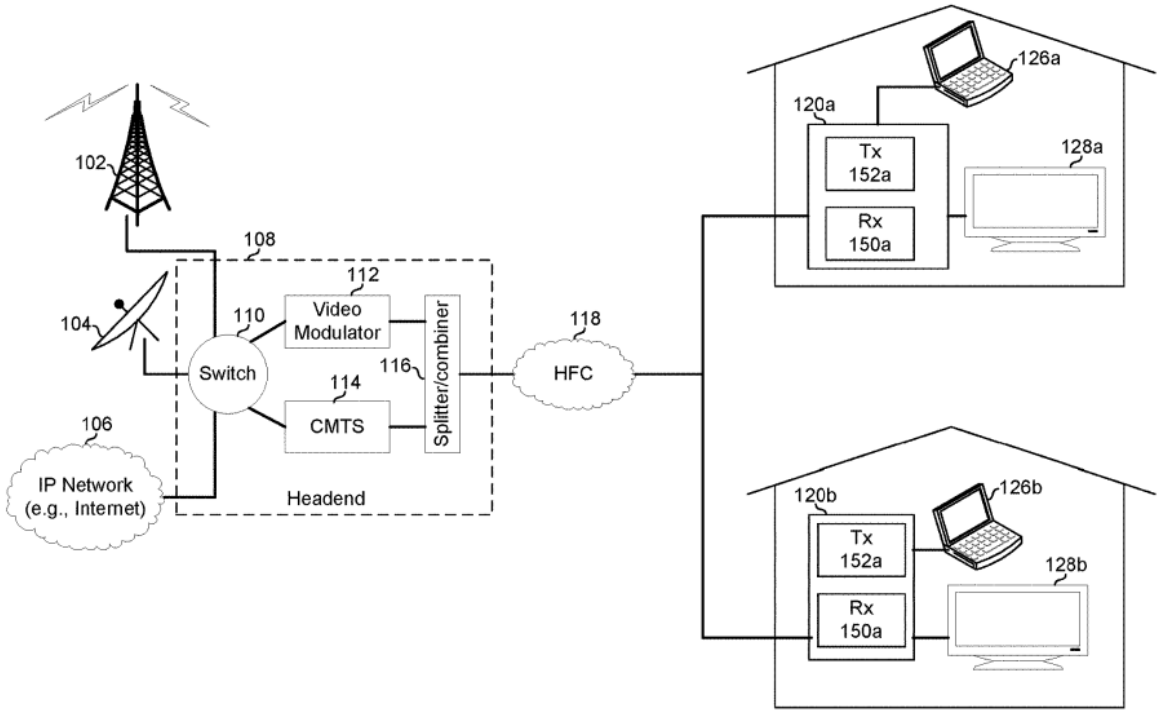

Figure 1A shows communication system headend 108 connected to receiving gateways 120a, 120b via hybrid fiber-coaxial network 118. See Ex.1001 at 2:34–3:4.

Each gateway 120a, 120b may comprise receive module 150 and transmit module 152. *Id.* at 2:57–63.

Figure 1B of the '008 patent is reproduced below.

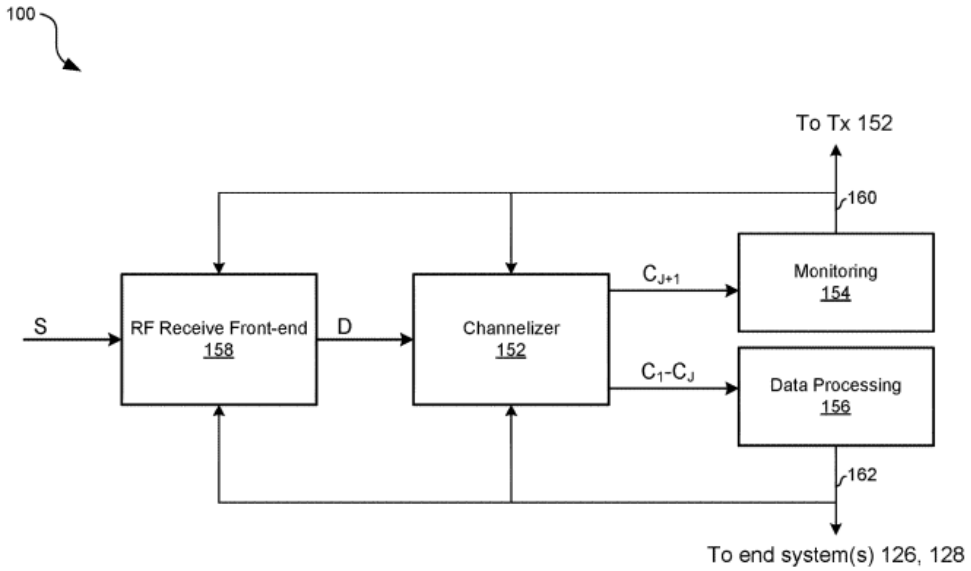

Figure 1B shows an example receiver operable to perform spectrum monitoring. Id. at 3:16–18.

The receiver comprises circuit 100 including RF receive front-end module 158, channelizer module 102, monitoring module 154, and data processing module 156. *See id.* at 3:5–10. RF receive front-end module 158 receives an RF signal S and processes it to generate a digital signal D. *See id.* at 3:11–12. Channelizer 102 selects J+1 frequency bands (C_1–C_J) and outputs them to monitoring module 154 and data processing module 156 for output to end systems 126, 128. *See id.* at 3:20–23. Monitoring module 154 analyzes band C_{J+1} from channelizer 102 to measure its characteristics. *See id.* at 3:33–35. The measured characteristic may be signal power level, delay, or phase shift versus frequency, or signal to noise ratio. *See id.* at 3:35–45. Monitoring module 154 may output control signal 160 to configure channelizer 102 or RF front-end receive module 158, or may control the transmission of network management/maintenance messages by the device 150,

which may indicate television channels are outside acceptable bounds and/or convey measured/determined characteristics back to the head-end. *See id.* at 3:48–60.

C. Challenged Claims

As noted above, Petitioner challenges claims 1–18, of which claims 1, 3, and 11 are independent. Claim 1 is illustrative and is reproduced below.

> 1. A system comprising:
>
> an analog-to-digital converter operable to digitize a received signal spanning an entire television spectrum comprising a plurality of television channels, said digitization resulting in a digitized signal;
>
> a signal monitor operable to:
>
> analyze said digitized signal to determine a characteristic of said digitized signal; and
>
> report said determined characteristic to a source of said received signal;
>
> a data processor operable to process a television channel to recover content carried on the television channel; and
>
> a channelizer operable to:
>
> select a first portion of said digitized signal;
>
> select a second portion of said digitized signal; and
>
> concurrently output said first portion of said digitized signal to said signal monitor and said second portion of said digitized signal to said data processor.

Ex. 1001, 7:15–32.

D. Asserted Grounds

Petitioner contends that the challenged claims are unpatentable on the following grounds (*see* Pet. 25):

Claims Challenged	35 U.S.C. §[1]	Reference(s)/Basis
1–18	103	Kamieniecki,[2] Konstantinos[3]
7, 8, 15, 16	103	Kamieniecki, Konstantinos, Yu[4]
9, 17	103	Kamieniecki, Konstantinos, Cholas[5]
1–6, 9–14, 17, 18	103	Renken[6]
9, 17	103	Renken, Cholas

Petitioner also relies on Declarations of David B. Lett (Ex. 1002 and 1032) to support its challenges. Patent Owner relies on a Declaration of Samuel H. Russ, Ph.D. (Ex. 2013).

II. ANALYSIS

We discuss the appropriate level of skill in the art, claim construction, and patentability, in that order.

A. Level of Ordinary Skill in The Art

Petitioner contends that a person having ordinary skill in the art "would have had a degree in electrical engineering or a similar discipline, and three-to-four years of experience working with television signal processing and communication

---

[1] Because the challenged claims have an effective filing date before the effective date of the AIA, we apply the pre-AIA version of 35 U.S.C. § 103.

[2] US 2005/0114879 A1, published May 26, 2005 (Ex. 1009).

[3] US 2010/0120386 A1, published May 13, 2010 (Ex. 1010).

[4] US 2010/0303181 A1, published Dec. 2, 2010 (Ex. 1016).

[5] US 2008/0313691 A1, published Dec. 18, 2008 (Ex. 1017).

[6] US 8,649,421 B2, issued Feb. 11, 2014 (Ex. 1011).

systems," and that "[a]dditional education may substitute for professional experience and significant work experience may substitute for formal education." Pet. 30 (citing Ex. 1002 ¶¶ 40–42). "Patent Owner accepts the Petition's [description of a person of ordinary skill] solely for purposes of responding to the Petition in this proceeding." PO Resp. 11.

Based on our review of the record before us, we determine that Petitioner's stated level of ordinary skill in the art is reasonable because it appears consistent with the evidence of record, including the asserted prior art. Accordingly, we apply Petitioner's definition in this Decision.

B. Claim Construction

We construe claims using the standard that would be applied in a civil action under 35 U.S.C. § 282(b), giving terms their ordinary and customary meaning to one of ordinary skill in the art in view of the specification and prosecution history. *See* 37 C.F.R. § 42.100(b).

Petitioner contends that all claim terms should be given their ordinary and customary meaning. Pet. 30. Petitioner notes that a district court has issued constructions for the terms "operable to," "digitize a received signal spanning an entire television spectrum comprising a plurality of television channels," "signal monitor," "data processor," and "channelizer." *Id.* at 31 (citing Ex. 1020, 30–26, 61–64; Ex. 1002 ¶ 47). Petitioner, however, does not assert that any of these interpretations necessarily apply here. *Id.* at 30–32.

Patent Owner asserts that its "arguments . . . do not turn on a specific construction of any terms" and that "all claim terms should be given their plain and ordinary meaning as understood in the relevant art." PO Resp. 12.

On the present record, we do not discern a need to construe explicitly any claim language because doing so would have no effect on our analyses and will not

assist in resolving the present controversy between the parties. *See Realtime Data, LLC v. Iancu*, 912 F.3d 1368, 1375 (Fed. Cir. 2019) ("The Board is required to construe 'only those terms . . . that are in controversy, and only to the extent necessary to resolve the controversy.'") (quoting *Vivid Techs., Inc. v. Am. Sci. & Eng'g, Inc.*, 200 F.3d 795, 803 (Fed. Cir. 1999)).

C. Obviousness: Kamieniecki and Konstantinos

Petitioner contends that claims 1–18 would have been obvious in view of Kamieniecki in view of Konstantinos, alternatively adding Yu for claims 7–8 and 15–16, and Cholas for claims 9 and 17. *See* Pet. 32–60.

We begin with an overview of the primary references and then turn to the parties' arguments.

1. Kamieniecki

Kamieniecki is titled "Monitoring Signal Quality on a Cable Network" and discloses a set-top box that monitors signal quality in downstream and upstream paths and sends related information to a headend as it is collected or when polled by the headend. *See* Ex. 1009, Abstract.

Kamieniecki's Figure 1 is reproduced below.

FIG. 1

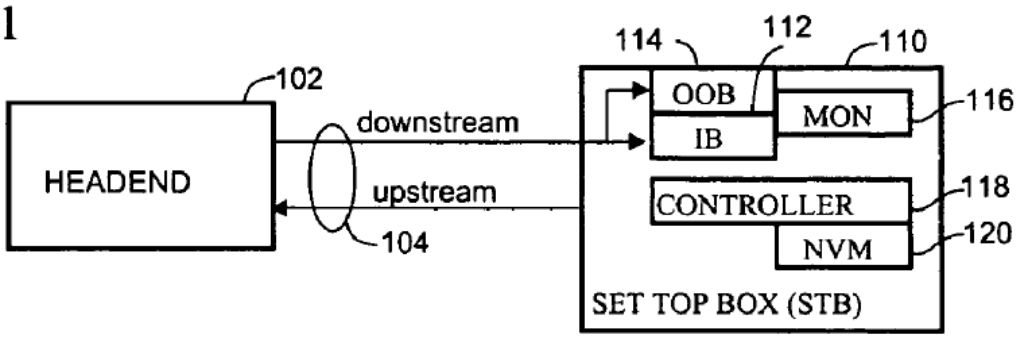

Figure 1 shows a cable system with headend 102 and a network of cables 104 connected to set-top box ("STB") 110. See Ex. 1009 ¶ 13.

Set-top box 110 has an in-band ("IB") tuner 112 and out-of-band ("OOB") tuner 114 so that it can receive in-band and out-of-band communications

simultaneously. *See* Ex. 1009 ¶ 13. Thus, "subscribers can be tuned to a channel receiving audio and video content while, at the same time, the STB 110 is receiving instructions in an OOB channel." *Id.* Monitor 116 generates information related to signal quality on the channels (either IB or OOB, or both). *See id.* ¶ 14. Controller 118 controls the overall operation of set-top box 110. *See id.* Non-volatile memory 120 stores information relating to signal quality gathered by monitor 116. *See id.*

Monitor 116 may perform monitoring at periodic intervals, or idle times, and tunes to each channel in its channel map to collect statistics such as channel absence/presence, error count, signal level estimates, and errors/dropouts, which may be transmitted to headend 102. *See* Ex. 1009 ¶¶ 14, 17–21.

2. Konstantinos

Konstantinos is titled "Multi-Channel Receiver Architecture and Reception Method" and discloses that television receivers of the time had a single tuner for a single channel, but recognizes that the "evolving market for data and programming services will demand that receivers have the capability of multi-channel tuning." Ex. 1010 ¶ 1.

Konstantinos' Figure 2 is reproduced below.

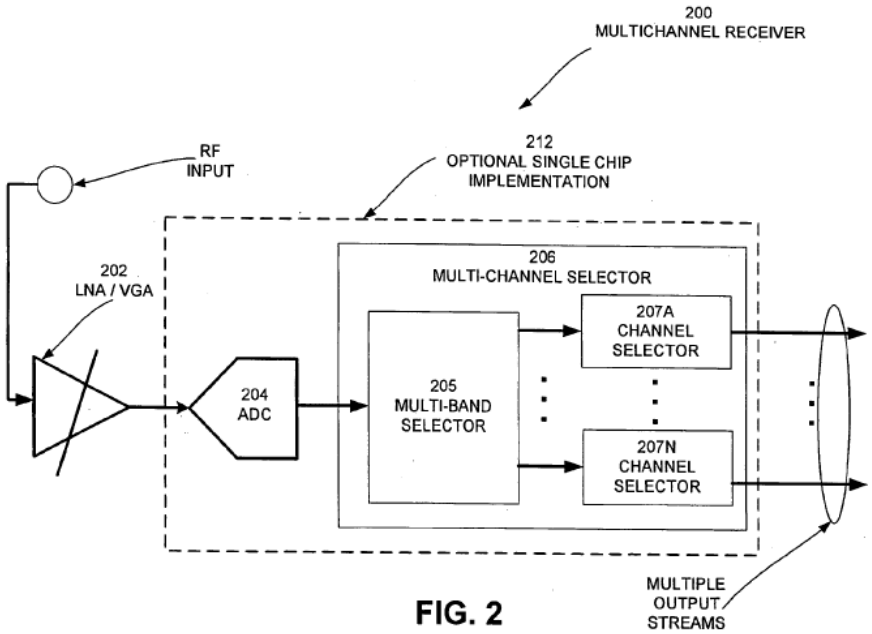

FIG. 2

Konstantinos' Figure 2 is "a block diagram of illustrating logical components of a multi-channel receiver." Ex. 1010 ¶ 33.

The above figure illustrates the logical components of Konstantinos's multi-channel receiver 200 including low-noise-amplifier and variable gain amplifier ("LNA/VGA") 202, analog-to-digital converter ("ADC") 204, and multi-channel selector 206 including multi-band selector 205 and channel selectors 207A–207N. *See* Ex. 1010 ¶¶ 42–43. LNA/VGA 202 receives a composite broadband RF input signal (e.g., a cable TV signal with bundled channels) from an RF input. *See id.* ¶ 43. The output of the LNA/VGA is digitized by ADC 204 and output to multi-channel selector 206. *See id.* Multi-channel selector 205 performs coarse channel selection by splitting the ADC output into sub-bands. *See id.* ¶ 45. Fine channel selection is performed by channel selectors 207 for delivery to the receiver output. *See id.* ¶ 46.

3. Motivation to Combine

Patent Owner argues that "there is no reasonable expectation that the Petition's POSITA would be able to successfully combine Kamieniecki and Konstantinos in a manner that renders obvious the claimed invention and [that] the Petition fails to provide a sufficient motivation to combine the references in the manner proposed." PO Resp. 13.

a. The Experience Level of One of Ordinary Skill

Patent Owner first asserts that one with the level of skill identified by Petitioner "would not [have been] motivated to make the combination proposed by Petitioner" and would not "have [had] any expectation of success in doing so." PO Resp. 19. According to Patent Owner, Petitioner's expert, Mr. Lett, "made two admissions during his deposition that undercut any motivation to combine or reasonable expectation of success that Petitioner's defined POSITA would have relating to Kamieniecki and Konstantinos." *Id.* at 20.

First, Patent Owner argues that "the proposed combination would require integration of the high-speed ADC of Konstantinos, which would require a significantly larger sampling rate in order to digitize the received signal," that "additional power supplies and other components would [need to] be added to Kamieniecki's STB," and that "[t]he complexity involved in this would effectively result in a complete redesign of Kamieniecki's STB." PO Resp. 20–21 (citing Ex. 2013 ¶¶ 91–92, 97. Patent Owner points to Mr. Lett's testimony that "tasks when designing a STB would be assigned to team members based on their skill: 'the more complicated or complex functionality'—like determining the power consumption of a high speed analog to digital converter as would be required by Petitioner's combination—would be given to a more experienced engineer; whereas, the 'simpler tasks' would be given to an engineer with a similar skill level

as the Petition's POSITA." *Id.* at 21 (citing Ex. 2014, 35:12–22; Ex. 2013 ¶¶ 100–101). Patent Owner argues that Dr. Russ similarly testifies that "these individuals would not have been trusted with the more complicated functionalities because they lacked the skills to make it work." *Id.* (citing Ex. 2013 ¶¶ 100–101).

Petitioner responds that Dr. Russ' experience with set-top boxes "ended several years before the priority date of the '008 patent," and that Patent Owner "also ignores that these issues are already addressed in Konstantinos, and that a POSITA has ordinary creativity." Pet. Reply 2.

We agree with Petitioner that the combination presented would have been within the level of ordinary skill. We recognize that creation of an entirely new set-top box would be a substantial effort involving different disciplines, but the question for us not whether one of ordinary skill in the art would have been able to design and implement an entire set-top box by themselves from scratch. Instead, the question is whether it would have been obvious that at the references at issue might advantageously combined to yield an improved device as claimed. The law does not foreclose the idea that the skilled artisan might need assistance with the implementation of the combination, particularly where the assistance would be with topics (e.g., power supplies) that are beyond the scope of the claims.

Moreover, it is far from clear that the combination would require the amount of redesign Patent Owner suggests. As Petitioner observes, Konstantinos explains that its approach reduces the necessary sampling rate, which "has a significant impact in the improvement of power efficien[cy]." Ex. 1010, 102. It thus appears that many of the alleged problems have already been addressed by Konstantinos. *See* Reply 2–3.

Second, Patent Owner argues that "[e]ven though Mr. Lett has more experience than Petitioner's POSITA, even he had to admit that he had not figured

out how one would supposedly combine Konstantinos and Kamieniecki as Petitioner's attorneys argue would be done in the Petition." PO Resp. 21–22. Specifically, Patent Owner argues that Mr. Lett could not "explain how Konstantinos's multi-channel receiver would output to both a decoder (the claimed data processor) and the monitor of Kamieniecki (the claimed signal monitor/analyzer)," "identify how many tuners (i.e., channel selectors) there would have to be in his resulting combination of Kamieniecki and Konstantinos," or "even identify which reference—Kamieniecki or Konstantinos—he was relying on as disclosing the required "data processor" of the challenged claims." *Id.* at 21 (citing Ex. 2014, 174:3–10, 175:6–16, 175:21–176:16, 150:7–20, 159:6–20).

Patent Owner argues that the first point "is quite significant and demonstrates that the Petition's POSITA would be unable to combine the references" because "Mr. Lett opines that the physical-substitution combination of Kamieniecki and Konstantinos renders this portion of the challenged claims obvious, [and] the law presumes that he had thought through how a POSITA would combine the references and concluded that the POSITA would have a reasonable expectation of success in so doing." *Id.* at 21–22. Patent Owner further points to the fact that Mr. Lett was unwilling to "fill in the gap" at his deposition. *See id.* 22–24. According to Patent Owner, "if Petitioner's expert cannot explain how he himself would make the proposed combination, Petitioner has no way of showing that a POSITA having far less skill and experience would be motivated to do so too. *Id.* at 24–25.

Petitioner responds that "Mr. Lett's refusal to play along with PO's counsel in creating a circuit diagram does not change the fact that Konstantinos expressly teaches modernizing STBs by upgrading their tuner(s) to use a digital multichannel receiver." Pet. Reply 3–4. Petitioner also responds that "Mr. Lett noted

Konstantinos' nonlimiting examples that simultaneously provided sixteen channels," that the "data processor" could be found in either reference, and that the decoders would be located after the multi-channel receiver. *See* Pet. Reply 4.

We do not agree with Patent Owner that Petitioner's argument presents a "physical substitution" (*see* PO Resp. 18) that requires some higher level of detail. We understand Petitioner's assertion that "[t]he Kamieniecki-Konstantinos combination replaces the IB and OOB tuners in Kamieniecki's STB with Konstantinos' multi-channel receiver" (Pet. 32) to simply suggest a combination of the concepts disclosed in the references. We note than even the mocked-up drawing that Patent Owner offers on page 18 of the Response shows schematic, not physical, components. We thus do not agree that Mr. Lett's testimony tends to show that this combination would have exceeded the level of the ordinary skill in the art, and we do not fault Mr. Lett's unwillingness to speculate on additional details on the fly at the deposition.

Patent Owner additionally argues that "[t]o further undercut the Petition's basis for concluding there is a reasonable expectation of success is that Kamieniecki and Konstantinos receive differently formatted RF signals." PO Resp. 25 (citing Ex. 2013 ¶ 95). According to Patent Owner, "Kamieniecki's STB receives a downstream signal that contains both IB and OOB channels," meaning that "the OOB channels would have a bandwidth of 1.8 MHz or between 1-2 MHz, whereas the bandwidth of the IB channels would be 6 MHz," and, "[i]n contrast, Konstantinos would receive a downstream signal formatted based on the DOCSIS standard, which requires a standard 6 MHz bandwidth across the entire downstream spectrum." *Id.* (citing Ex. 2013 ¶¶ 95–96). Patent Owner argues that "[t]his disparity between DOCSIS and OOB would force the POSITA to reprogram the channel selectors of the multi-channel receiver to handle the

different bandwidths of the IB/OOB downstream signal, which is what the Petition relies on for disclosing the claimed 'received signal,'" and that "[t]his is yet another detail the Petition omits in an effort to disguise its proposed combination as a simple substitution of elements." PO Resp. 25–26.

Petitioner responds that "Kamieniecki does not limit its OOB to any standard, and Konstantinos does not limit its data to DOCSIS implementations - it references receiving DOCSIS and DVB-C signals as examples" and that "each time Konstantinos references a 6 MHz channel, it is as an example." Pet. Reply 5–6 (citing Ex. 1032 ¶ 10, Ex. 1010, 13, 51, 104, 114).

We agree with Petitioner that neither reference is limited to the exemplary bandwidths identified, and that one of ordinary skill would have understood that other bandwidths could be used.

b. Whether One Would Add Konstantinos' Multi-Channel Receiver to Kamieniecki

The Petition asserts that one of ordinary skill would have been motivated to replace Kamieniecki's IB and OOB tuners with Konstantinos's multi-channel receiver "to enable simultaneous tuning and monitoring of larger numbers of channels (e.g., four or more) as required by new cable technologies such as DOCSIS 3.0." Pet. 34. The Petition also asserts that the combination would reduce "cost and complexity through a single chip solution." *Id.* Patent Owner argues that "Petitioner is wrong on both counts." PO Resp. 27.

First, Patent Owner argues that "[t]he Petition provides no support for the assertion that DOCSIS 3.0 required "simultaneous tuning and *monitoring*" because DOCSIS 3.0 does not require the simultaneous tuning and monitoring of different channels." PO Resp. 27. Patent Owner contends that "there is no basis to conclude that DOCSIS 3.0 would motivate a POSITA to make the proposed

combination because *there is nothing about DOCSIS 3.0 to say what Mr. Lett and Petitioner claim it says*." *Id.*

Petitioner responds that the Petition's discussion of monitoring multiple channels "addressed a motivation for the combination – (i.e., updating Kamieniecki's STB to have Konstantinos' multi-channel receiver), not a requirement of DOCSIS." Pet. Reply 6. Petitioner observes that "Konstantinos expressly states the 'evolving market' demands multi-channel tuning, and 'unrestricted multi-channel functionality,'" and that "DOCSIS 3.0 was simply an example of this evolving market," in that "DOCSIS 3.0 requires simultaneous reception of at least 4 channels." *Id.* Petitioner argues that "Kamieniecki desires to monitor all channels – it just monitors them one at a time (and during idle periods) because it only has one IB tuner," and that "[u]pgrading Kamieniecki's STB with Konstantinos' multi-channel receiver [would allow] it to monitor at any time (instead of waiting for idle), and in parallel without disturbing users, all of which would have been desirable . . . since errors can occur at any time." *Id.*

We agree that the record provides sufficient evidence that one of ordinary skill in the art would have found it advantageous to add a multi-channel receiver to improve monitoring, as Petitioner argues. Having the ability to monitor without waiting for idle or disturbing users would be a clear advantage.

Second, Patent Owner argues that "the proposed combination would actually increase the complexity of Kamieniecki's STB in order to accommodate Konstantino's multi-channel receiver" because "[t]he high-speed ADC taught by Konstantinos alone would require additional power supplies and shielding in order for the combination to function properly." PO Resp. 28 (citing Ex. 2013 ¶¶ 90–97, 105). Patent Owner then argues that the combination would be expensive to design, and that "pennies matter" in set-top boxes, so an "STB would only have the

needed functionality for the STB's intended application." PO Resp. 28–29 (citing Ex. 2014, 25:8–19, 30:15–19, 26:7–15, 28:17–20, 28:13–16, 31:11–14; Ex. 2013 ¶¶ 76, 106–108). Patent Owner contends that "a STB with Konstantinos's multi-channel receiver would be more expensive than a basic STB like Kamieniecki's" and that "[g]iven the differences in cost, a POSITA would not have been motivated to incorporate a more expensive multi-channel receiver into a basic STB because the application for which the basic STB would be used do not need multi-channel functionality." *Id.* at 29 (citing Ex. 2013 ¶¶ 108–109).

We agree with Petitioner that cost is not a basis for finding an otherwise obvious combination non-obvious, particularly where the additional cost comes with clear benefits. *See, e.g., Grit Energy Solutions, LLC v. Oren Tech.*, LLC, 957 F.3d 1309, 1323–24 (Fed. Cir. 2020) (explaining that expense alone is not a reason to overcome an otherwise sufficient motivation to combine); *General Elec. Co. v. Raytheon Tech. Corp.*, 983 F.3d 1334, 1351 (Fed. Cir. 2020) ("[A] given course of action often has simultaneous advantages and disadvantages, and this does not necessarily obviate motivation to combine." (citing *Medichem, S.A. v. Rolabo, S.L.*, 437 F.3d 1157, 1165 (Fed. Cir. 2006))). We also agree with Petitioner that the cost factor would be minimized where an "STB manufacturer would have multiple STB models, with different features, available for sale at a given time" and that "even if some customers were happy with a 'basic' STB, others would have wanted the 'advanced' STB." Pet. Reply 8 (citing Ex. 1033, 29:8-23; Ex. 1032 ¶¶ 5–6).

c. Whether the Combination Would Fundamentally Alter the Operation or Render Inoperable

Patent Owner argues that the Petition asserts one of ordinary skill "would disregard Kamieniecki's principle of operation and do the exact opposite—i.e., gather signal quality information while the STB is in use," which is a "fundamental change [that] weighs strongly against any motivation to combine." PO Resp. 31.

We agree with Petitioner, however, that Kamieniecki only monitoring when idle, so as not to disturb the viewing experience, is a limitation, not a "fundamental principle of operation." *See* Pet. Reply 9.

Patent Owner contends that Petitioner's motivation to combine, "allow[ing] for signal monitoring without waiting for an idle time," does not justify the combination because "[a]ccording to Mr. Lett, Kamieniecki itself could select different channels and monitor one channel while processing the other." PO Resp. 31–32 (citing Ex. 2014, 123:19–124:8). Patent Owner concludes that "despite having the ability to monitor one channel and process another, Kamieniecki made the decision to wait for the STB to be idle before gathering signal quality information as both experts have acknowledged," that "[i]t made this decision to avoid interrupting the user's service," and that "the Petition has provided no reason to disregard this deliberate choice." *Id.* at 32 (citing Ex. 1002 ¶ 145; Ex. 2013 ¶¶ 114–115; Ex. 1009 ¶ 17).

Fundamentally, Patent Owner argues that "Kamieniecki offers a complete signal-monitoring solution that gathers signal quality information by tuning through the channel list while the STB is idle and then reports that information" and that "absent the hindsight bias of the Petition, [one] would not [have been] motivated to fundamentally alter Kamieniecki simply because incorporating Konstantinos's multi-channel receiver would increase the number of tuners, especially when Kamieniecki ***already has multiple tuners*** and is capable of tuning to multiple channels simultaneously." PO Resp. 33 (citing Ex. 1009 ¶¶ 8, 15, 17, 22, Fig. 2).

We agree with Petitioner that "Kamieniecki's STB has only one IB tuner and one OOB tuner, each able to tune only one of its respective type of channel at a time, and that "[t]elevision channels for viewing are carried on IB channels, so

waiting for the IB tuner to be idle was a necessary evil for monitoring television channels – not some unstated aversion to simultaneous tuning." Pet. Reply 10.

Patent Owner further argues that "[t]he Petition is also implicitly attempting to fundamentally change the architecture of Konstantinos by alternating the number of channel selectors or channel decoders." PO Resp. 33. According to Patent Owner, this means either "remov[al] [of] a decoder from Konstantinos so that a channel selector would be dedicated to the signal monitor (N-1 number of decoders)," or "inclu[sion] [of] an extra channel selector that specifically outputs to the signal monitor (N+1 number of channel selectors)." PO Resp. 33–34. Patent Owner argues that "[b]oth options fail" because "removing a decoder would reduce the number of channels simultaneously available to the user" and "neither the Petition nor Mr. Lett identifies any suggestion or motivation to add a dedicated signal monitoring pathway to Konstantinos." *Id.* at 34.

We find this argument unpersuasive because we agree with Petitioner that one of ordinary skill considering Konstantinos would have understood that any number of channel selectors and decoders may be implemented, and that it would have been obvious to have enough for viewing and monitoring at the same time. *See* Pet. Reply 10–11 (citing Pet. 41–44; Ex. 1002 ¶¶ 143–146; Ex. 1032 ¶ 7).

Finally, Patent Owner argues that the Petition's proposed motivation to combine is outweighed by the fact that the proposed combination of Kamieniecki and Konstantinos would render Kamieniecki's reporting functionality inoperable. Specifically, Patent Owner argues that "replacing the OOB tuner with the multi-channel receiver would render the combination unable to 'report' a determined characteristic to the source." PO Resp. 34–35. Patent Owner argues that even though "the disclosed transmitter would remain in the proposed combination" and "the proposed combination would retain the physical capability to transmit

information to the headend," "the transmitter would not know when to report a determined characteristic after removal of the OOB tuner." *Id.* at 35.

Patent Owner argues that, for reporting upon being polled, "without the OOB tuner, the proposed combination would not be able to receive the poll being transmitted on the OOB channels unless Konstantinos's multi-channel receiver was redesigned to process an OOB channel. *Id.* at 35–36 (citing Ex. 2012 ¶¶ 120–122). Alternatively, Patent Owner argues that, for reporting as information is collected, "[d]epending on the OOB channel standard being used, removing the OOB tuner would create one of two issues," either "the STB would be unable to receive an acknowledge message and would continue to transmit the same information until the STB stops reporting" or "the STB would transmit out of turn thereby causing its message to be lost when it collides with another STB's messages." *Id.* at 36 (citing Ex. 2013 ¶¶ 122–123).

We agree with Petitioner, however, that the combination does not lose the OOB functionality. Instead, it simply uses Konstantinos's receiver to receive OOB data previously received by Kamieniecki's OOB tuner. *See* Pet. 34–36; Pet. Reply 11.

As to Patent Owner's argument that it would be a "redesign" to use Konstantinos's receiver to receive an OOB channel, we agree with Petitioner that Konstantinos describes receipt of both TV and data channels and selection of "any combination of the available channels" in the 50–1000 MHz range. Pet. Reply 11 (citing Ex. 1010 ¶¶ 1, 11, 43, 104–105).

d. Conclusion Regarding Motivation to Combine

Based on the analysis provided in the Petition (*see* Pet. 32–35, 43–44), and for the reasons detailed above, we find that Petitioner has established a motivation to combine Kamieniecki and Konstantinos.

4. Allegedly Missing Elements

a. "Analyze Said Digitized Signal to Determine a Characteristic of Said Digitized Signal"

Patent Owner argues that the Petition "fails to address that Kamieniecki's monitor analyzes an analog signal, and therefore, the Petition has failed to identify where the prior art discloses analyzing a digitized signal." PO Resp. 37.

Patent Owner argues that "[l]ike all digital cable systems, Kamieniecki's STB receives 'digital transmission' from the headend," where "'digital transmissions' refer to analog carrier signals modulated with digital information." PO Resp. 38 (citing Ex. 1009 ¶¶ 4, 14; Ex. 2013 ¶ 127; Ex. 2014, 57:3–13; Ex. 2013 ¶ 127). Patent Owner contends that "these analog carrier signals are received by the IB and OOB tuners," "which would be analog tuners" that "simply select (i.e. 'tune to') a specific portion of the analog carrier signal and output the selected portion to Kamieniecki's monitor," meaning that "[t]he IB and OOB tuners do not convert the selected portion of the analog carrier signal to the digital domain." *Id.* at 39 (citing Ex. 1009 ¶ 22; Ex. 2013 ¶ 128).

Patent Owner argues that two explanations Dr. Lett offered at his deposition for how the IB and OOB tuners disclosed in Kamieniecki could be digital tuners are insufficient because "the first example still selects and outputs an analog carrier signal" and, in the second, "Kamieniecki discloses a monitor only capable of analyzing portions of an analog carrier signal." PO Resp. 39–40. Patent Owner argues that "the Petition does not propose modifying Kamieniecki's monitor 116 so that it can analyze digital signals," but instead, "proposes a physical replacement of the analog IB and OOB tuners with the digital multi-channel receiver of Konstantinos without modifying the monitor at all." *Id.* at 40. Patent Owner concludes that, because one of skill in the art "would know that a component designed to process an analog input could not—absent extensive

modification—process digital signals," the Petition has "failed to demonstrate that the prior art discloses or renders obvious the 'signal monitor operable to: analyze said digitized signal.'" *Id.*

Petitioner responds that "[Patent Owner]'s argument relies on an incomplete characterization of digital transmissions" because "while the received carrier signals are analog, they carry digital information that is recovered by the STB – it does not stay analog forever." Pet. Reply 12. Petitioner argues that Kamieniecki explains that even a basic STB (such as Scientific-Atlanta's Explorer 4200 released in 2002, years before the 2011 priority date of the '826 patent) receives digital information, such as MPEG-2 transport streams. *Id.* at 12–13 (citing Ex. 1009 ¶ 4). Petitioner asserts that Patent Owner's expert, Dr. Russ, never stated that Kamieniecki's STB lacks an ADC, and admitted it is a typical component of an STB and that "[t]here would have to be analog to digital conversion in there somewhere" if an STB is to output an MPEG stream for viewing, as Kamieniecki teaches. *Id.* at 13 (citing Ex. 1009 ¶ 4; Ex. 1033, 32:12–34:21; Ex. 2013 ¶ 62). According to Petitioner, one of ordinary skill would have understood that Kamieniecki's STB includes an ADC. *Id.* (citing Ex. 1032 ¶ 18). Petitioner asserts that, while Dr. Russ stated that Kamieniecki's IB/OOB tuners would output an analog signal for "further processing," a POSITA would understand that additional processing would include conversion by an ADC, and "would not have limited Kamieniecki's monitoring to only analog signals." *Id.* Petitioner also argues that Patent Owner improperly attacks Kamieniecki individually and that "Konstantinos discloses an 'information extraction processor' that analyzes the signal 'captured by the ADC' (i.e., the digitized signal) to make measurements such as bit-error-rate," and that one would have found it obvious to include such

measurements in Kamieniecki's monitor. *Id.* at 13 (citing Pet. 48-49; Ex. 1010 ¶ 109).

Patent Owner replies that Mr. Lett's testimony regarding Scientific-Atlanta's Explorer 4200 should be disregarded. Sur-reply 17 (citing Ex. 2013 ¶ 61). Patent Owner further argues that including an ADC in the "further processing" after Kamieniecki's tuners would result in two ADCs. *Id.* at 17–18 (citing Ex. 2013 ¶ 128; Ex. 1032 ¶ 18). Patent Owner also alleges that Petitioner presented an improper new argument by relying on Kamieniecki and Konstantinos to disclose the signal monitor, rather than Kamieniecki alone. *Id.* at 18–19 (citing Pet. 38–40).

We agree with Petitioner that Patent Owner's arguments attack Kamieniecki alone and do not properly consider what the combination of Kamieniecki and Konstantinos would have suggested to the skilled artisan. The Petition stated that Konstantinos's ADC digitizes the received RF signal, and that Kamieniecki's monitor would analyze digital signals from the IB/OOB tuners and determine signal quality information such as error count and signal level estimates. *See* Pet. 36–40. The Petition thus implies, contrary to Patent Owner's argument, that Kamieniecki's monitor analyzes signals in the digital domain. Patent Owner does not explain why it would have been beyond the level of ordinary skill to modify Kamieniecki's monitor to operate in the digital, rather than analog, domain to analyze the signal quality, as the Petition suggests.

b. "Concurrently Output"

Patent Owner argues that the Petition fails to render obvious "concurrently output said first portion of said digitized signal to said signal monitor and said second portion of said digitized signal to said data processor" because "neither Kamieniecki, Konstantinos, nor the proposed combination discloses concurrent data processing and signal monitoring," and "the Petition fails to explain how the

proposed combination concurrently outputs to a decoder (the claimed data processor) and Kamieniecki's monitor (the claimed signal monitor)." PO Resp. 41.

As to the first point, Patent Owner argues that "Kamieniecki does not disclose concurrently outputting to a signal monitor and a data processor because Kamieniecki discloses gathering signal quality information only when the STB 110 is idle (i.e., when no data processing is occurring)." PO Resp. 41 (citing Ex. 1009, ¶¶ 8, 15, 18, 22, Fig. 2). Patent Owner further argues that the "Petition does not identify any disclosure of concurrent output to a data processor and a signal monitor" in Konstantinos. *Id.* at 42–43.

On the second point, Patent Owner argues that "the Petition fails to explain how the multi-channel receiver is connected to either of the decoders or the monitor" and "[f]or the decoders, the Petition fails to explain what reference it is relying on for disclosing the location of the combination's decoders," and "[f]or the monitor, the Petition is not clear whether there is a dedicated signal processing pathway to the monitor." PO Resp. 43.

Petitioner responds that "[t]he Konstantinos multichannel receiver concurrently outputs 'multiple output streams" and that "when used with Kamieniecki, one can be monitored while another can be watched by a viewer." Pet. Reply 14–15.

We agree with Petitioner. The combination, as presented in the Petition, includes concurrently outputting a first portion of the digitized signal to the signal monitor (for monitoring) and said second portion of said digitized signal to said data processor (for viewing). *See* Pet. 36–40.

c. Customer Premises Gateway

Claims 9 and 17 recite "wherein said one or more circuits reside in a customer premises gateway" and the Petition asserts that "the claimed 'customer premises gateway' would be understood . . . to encompass set-top boxes like that in Kamieniecki." Pet. 52 (citing Ex. 1002 ¶ 175). Alternately, Petitioner argues that such "placement would have been obvious to a POSITA in view of Cholas" which "expressly teaches placing STB components into a premises services gateway 200 that consolidates STB functionality with other kinds of devices, such as a cable modem." *Id.* (citing Ex. 1002 ¶ 75; Ex. 1017, Abstract, ¶¶ 6, 20–22, 24–35, 38, 53–54, 105, 109, 134, 140, 199–202, Figs. 2a–2b, 3, 12–14; Ex. 1002, ¶ 175).

Patent Owner argues that "the Petition does nothing to address what modifications would be necessary to Cholas's gateway to accommodate" the set-top box of the combination as, for example, it does not "explain how Kamieniecki's monitor would be incorporated into the gateway to allow it to report a determined characteristic" and "does not even address where Kamieniecki's monitor would be located within Cholas's gateway." PO Resp. 45. Patent Owner contends that "[t]his failure to explain even the location of the monitor once incorporated into Cholas is a critical failure because the claims require a concurrent output to both the signal monitor/analyzer." *Id.* According to Patent Owner, "[b]ecause Mr. Lett and Petitioner contend a combination by physical substitution of elements, the Petition needed to provide some indication how the components would be placed within Cholas's gateway so as to still meet the requirements of the independent claims, like [1E]'s 'concurrently output' element." *Id.* at 45–46. Patent Owner asserts that "[a]ll Mr. Lett can say is that Kamieniecki's monitor would be located somewhere in the gateway" and "[t]hat is not enough to meet Petitioner's burden." *Id.* at 46.

Patent Owner additionally argues that "Mr. Lett's deposition testimony undercuts the Petition's proffered motivation to place Kamieniecki-Konstantinos's STB into Cholas" because "Cholas expressly teaches placing STB components into a premises services gateway 200 . . . with other kinds of devices, such as a cable modem," but Mr. Lett "testified that Kamieniecki's STB has a cable modem already," meaning that "[a]ccepting Mr. Lett's testimony, the proposed combination would have at a minimum two cable modems—one from Kamieniecki and one from Cholas—thereby resulting in more redundancy, not less." PO Resp. 46–47 (citing Pet. 52–53; Ex. 2014, 85:2–7).

Petitioner responds that "Kamieniecki shows a STB, and the claimed 'customer premises gateway' is broad enough . . . to encompass a STB, since the '008 patent uses the term to refer to a STB" and also that "Cholas used the term 'premises gateway' to refer to a device combining a STB with a cable modem, so it would have been obvious that the STB of Kamieniecki-Konstantinos would be similarly combined into such a gateway." Pet. Reply 15–16 (citing Ex. 1001, 5:37; Pet. 52–53).

We agree with Petitioner that "customer premises gateway" is broad enough to encompass a set-top box and find that the Kamieniecki-Konstantinos combination thus teaches or suggests this subject matter. We further find that it would have been obvious to locate the Kamieniecki-Konstantinos combination in a "customer premises gateway" like in Cholas. Patent Owner does not persuade us that placing circuitry implementing the Kamieniecki-Konstantinos combination in Cholas' housing would have had any impact on its functionality or would have been beyond the level of ordinary skill. We further find Patent Owner's argument that there would be two cable modems in the combination unpersuasive because one of ordinary skill would have recognized that the cable modem functionality

would not need to be duplicated. And, as noted above, we do not agree that the combination is a "physical substitution" that requires a heightened level of detail.

5. Objective Indicia of Non-Obviousness

Patent Owner argues that "[i]f the Board does find any of the claims to be unpatentable over the prior art, objective evidence of industry praise of the challenged claims of the '008 Patent supports the conclusion that the challenged claims are not obvious." PO Resp. 62.

According to Patent Owner, network service providers "struggled to monitor the spectrum throughout their network in a cost-effective manner that did not interrupt the customer's service," but "[e]ventually, MaxLinear—the original assignee of the '008 Patent—realized that it could leverage modems using wideband digitization or its proprietary Full Spectrum Capture technology 'to capture and report local (end–user) cable–plant spectra' to allow [Multi–System Operators ("MSOs")] to remotely monitor, manage, and troubleshoot their networks without interrupting their service." PO Resp. 63 (citing Ex. 2004, 2). Patent Owner asserts that "MaxLinear began embedding "Remote Spectrum Monitoring" into its devices at least as of September 4, 2013." *Id.* (citing Ex. 2016).

Patent Owner argues that "[w]hat distinguished MaxLinear's use of Remote Spectrum Monitoring from other approaches was that the monitoring was conducted in parallel with processing data so as to not disrupt the customer's service." PO Resp. 63 (citing Ex. 2004, 2; Ex. 2013 ¶¶ 143,145). Thus, contends Patent Owner, MaxLinear's Remote Spectrum Monitoring was a "paradigm shift in how cable operators troubleshoot home and network issues in the field" and "resulted in significant cost savings for MSOs while simultaneously increasing the amount of network performance data available to MSOs." *Id.* at 63–64 (citing Ex.

2016; Ex. 2015, 3; Ex. 2009, 5). Patent Owner asserts that "[e]ventually, the industry came to praise MaxLinear's Remote Spectrum Monitoring. *Id.* at 64 (citing Ex. 2007, 18; Ex. 2009; Ex. 2020).

Patent Owner next argues that "MaxLinear's Remote Spectrum Monitoring, especially the aspect of Remote Spectrum Monitoring that did not interrupt the customer's service, could not be implemented without the claimed inventions embodied in the independent claims of the '008 Patent" because "[t]o implement MaxLinear's Remote Spectrum Monitoring in CPE, the following components are needed: (1) an ADC capable of digitizing either large swaths of the received signal or the entire received signal; (2) a spectrum analyzer that measures the signal; (3) a component that reports any measurements; (4) the ability to process TV and/or DOCSIS channels; and (5) a component that breaks up the signal into smaller components so that signal analysis can occur in an unobtrusive manner—i.e., in parallel with the processing of TV and/or DOCSIS channels." PO Resp. 65 (citing Ex. 2018, 5–7; Ex. 2013 ¶¶ 146–50). Patent Owner argues that "[a]ll of these elements are recited in the independent claims." *Id.* at 65–66 (citing claim elements [1B], [1C], and [1D]). Patent Owner concludes that "there exists a nexus between Remote Spectrum Monitoring and the claimed inventions of the '008 Patent" such that "when the cable industry praised Remote Spectrum Monitoring, the cable industry was praising the claimed invention, which is evidence that the claimed invention was non–obvious." *Id.* at 66–67 (citing *Apple Inc. v. Samsung Elecs. Co., Ltd.*, 839 F.3d 1034, 1053 (Fed. Cir. 2016)).

Petitioner responds that Patent Owner's secondary considerations evidence actually "shows that remote monitoring and Full Band Capture were already known to the industry, and that it was other developments, not the claimed invention of the '008 patent, that resulted in the expansion and subsequent praise

of remote monitoring." Pet. Reply 23. Petitioner cites Exhibit 2009 to the effect that remote interrogation of customer equipment pre-dated DOCSIS. *Id.* at 23–24. Petitioner also cites Exhibit 2009 to the effect that "remote monitoring [had] been 'evolving over the past decade or two' and lists several factors that led to increased interest in remote monitoring," none of which "are attributed to MaxLinear or the '008 patent's invention. *Id.* at 24 (citing Ex. 2009, 4). Petitioner points to other papers that "tout the importance of Full-Band Capture for remote monitoring." *See id.* at 24–25 (citing Ex. 2015, 2; Ex. 2007, 17–18; Ex. 2020, 5; Ex. 2006). Petitioner also points out that, other than MaxLinear's own press release, Patent Owner's evidence does not show praise of MaxLinear specifically. *See* Pet. Reply 25 (citing Ex. 2007, 17; Ex. 2009; Ex. 2020).

Petitioner further argues that Patent Owner "attempts to tie the evidence to its purported invention . . . by paraphrasing its claim while omitting limitations that were necessary for allowance," including "report said determined characteristic to a source of said received signal," which was added to secure allowance. Pet. Reply 25–26 (citing Ex. 1004, 63, 69, 80, 84).

We conclude that Patent Owner has not shown a sufficient nexus between the claimed invention and any product embodying the claimed invention that was successful, praised, or solved a long-felt need. Patent Owner identifies five elements allegedly required "[t]o implement MaxLinear's Remote Spectrum Monitoring in CPE." *See* PO Resp. 65. To support this, Patent Owner cites pages 5–7 of Exhibit 2009. *See id.*[7] That exhibit, however, describes requirements for "Full Band Capture," not MaxLinear's "Remote Spectrum Monitoring." To

[7] The Response cites "Ex. 2018, pp. 5–7," which appears to be a typo given that the Russ Declaration cites "Ex. 2009, pp. 5–7," for the same point (*see* Ex. 2013 ¶ 146), and Exhibit 2009 appears to be the correct exhibit.

address that disconnect, Patent Owner asserts that "term Remote Spectrum Monitoring—developed by MaxLinear and implemented using the claimed invention of the '008 Patent—was used interchangeably with the term Full-Band Capture." Sur-reply 23 (citing Ex. 2013 ¶ 144).[8]

However, the cited passage of the Russ Declaration states that "[n]ear in time to MaxLinear's development of Full-Spectrum Capture, Broadcom developed a similar technology referred to as Full-Band Capture" and "the industry [had] started to use these two terms interchangeably to [refer] to the ability of equipment to digitize the entire received spectrum." Ex. 2014 ¶ 144. Dr. Russ further explains that "[c]onfusingly, the industry . . . also started using the term Full-Band Capture to refer to the ability to digitize and report a determined characteristic back to the MSO," such that "Full-Band Capture [could] be used interchangeab[ly] with Remote Spectrum Monitoring." *Id.*

"Full-Band Capture" thus could refer to MaxLinear's "Full-Spectrum Capture" (or MaxLinear's "Remote Spectrum Monitoring"), or Broadcom's "Full-Band Capture," or "Remote Spectrum Monitoring" more generally," or perhaps more than one of those. That being the case, we cannot conclude that Patent Owner's argument, which attempts to read the claims on the discussion of "Full-Band Capture" in Exhibit 2009, is mapping the claims to a MaxLinear product, instead of a Broadcom product, or something else entirely.

Moreover, we find Patent Owner's comparison of its summary of the "components needed" to "implement MaxLinear's Remote Spectrum Monitoring in CPE" (PO Resp. 65) unpersuasively vague and conclusory, because Patent Owner simply lists five components "needed" without identifying specific support

---

[8] Confusingly, Dr. Russ calls the MaxLinear product "Full-Spectrum Capture," not "Remote Spectrum Monitoring." *See* Ex. 2013 ¶ 144.

for that assertion, other than the conclusory testimony of Dr. Russ, and because the mapping of the claim language to the "components" also has gaps.

For example, for the ADC limitation, the Response quotes the claim language "digitize a received signal spanning an entire television spectrum" but then asserts that, because "the recited ADC must be capable of digitizing large swathes of the received spectrum, it satisfies the ADC needed for Remote Spectrum Capture." PO Resp. 65 (citing Ex. 2013, 148). This appears to indicate that "Full-Spectrum Capture" captures "large swaths" of the spectrum, where the claims require "an entire television spectrum."

For the signal monitor and reporting limitations, the Response argues that "signal-to-noise ratio (SNR) . . . is a common measurement used in applications of Remote Spectrum Monitoring." PO Resp. 66. The citation for this, however, is Exhibit 2020, which appears to describe "full band capture" generally, not any MaxLinear product. In addition, as Petitioner argues, the Response does not address the claim requirement that the signal monitor "report said determined characteristic to a source of said received signal." *See* Pet. Reply 26. Patent Owner points to the first sentence at the top of page 66 of the Response,[9] but that is simply an introductory conclusion quoting the claim language, not evidence that a MaxLinear product, or any other product, included that feature. As Petitioner observes, this is significant because the claims were allowed as a result of the addition of the reporting limitation. *See* Pet. Reply 26 (citing Ex. 1004, 63, 69, 80, 84).

---

[9] *See* PO Resp. 66 ("The next two requirements are met by the recited signal monitor, which is 'operable to analyze said digitized signal to determine a characteristic of said digitized signal; and report said determined characteristic to a source of said received signal.' Ex. 1001, cl. [1C].").

Patent Owner argues that "Dr. Russ's opinions (Ex. 2013, ¶¶ 141–50) remain unrefuted by anything other than attorney argument." Sur-reply 22. Even if that is true, however, we are unpersuaded by the testimony because Dr. Russ' opinions regarding nexus only repeat Petitioner's arguments, primarily just quote and paraphrase the '008 patent's claims and specification, and are not supported by sufficient evidence.

Patent Owner also argues that "Mr. Lett testified that monitoring was a well-known problem in the industry." Sur-reply 22 (citing Ex. 2021, 35:25–36:1). This is not persuasive because it does not tend to show that the problem was solved by MaxLinear or the subject matter of the '008 patent. In fact, Mr. Lett testified that the problem was solved by Konstantinos. *See* Ex. 2021, 35:25–36:17 ("And then we have a disclosure of Konstantinos that says, aha, this is how we can do it with -- this is how we can monitor a whole bunch of channels.").

For these reasons, we find that Patent Owner does not establish the required nexus and that Patent Owner's objective evidence arguments are unpersuasive.

6. Conclusion as to Kamieniecki and Konstantinos

In view of the prior art and arguments presented in the Petition, and having found Patent Owner's arguments unpersuasive, we conclude that Petitioner has shown, by a preponderance of the evidence, that claims 1–18 of the '008 patent are unpatentable.

D. Obviousness: Renken

Petitioner contends that claims 1–6, 9–14, and 17–18 would have been obvious in view of Renken, and that claims 9 and 17 would have been obvious in view of Renken and Cholas. *See* Pet. 60–77.

1. Renken

Renken is titled "Cable Modem for Network Measurements" and it relates to measurement-capable cable modems ("MCCMs") for cable networks. *See* Ex. 1011, Abstract. Renken discloses that idle transmitters and receivers of MCCMs perform upstream and downstream measurements when directed by a central measurement controller ("CMC"), which may be located at the headend. *Id.*

Renken's Figure 1 is reproduced below.

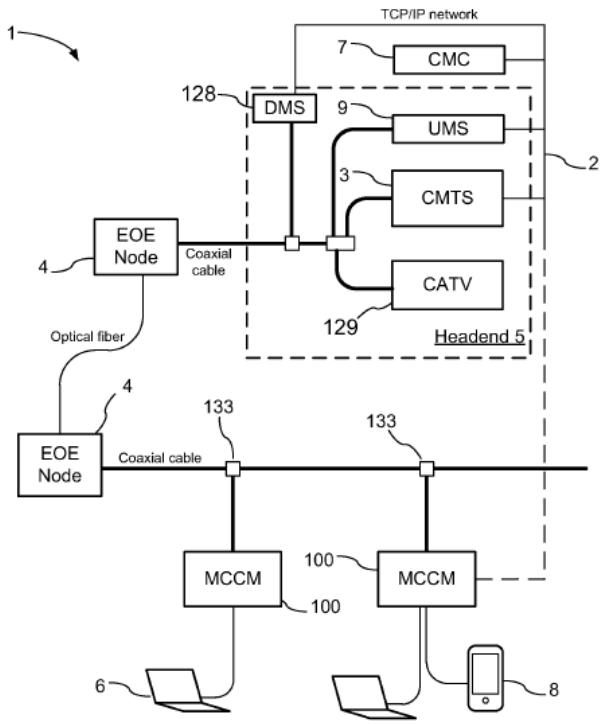

Fig. 1

Renken's Figure 1 is "a schematic diagram of a cable network incorporating modem-based network monitoring." Ex. 1011, 5:35–36.

Figure 1 shows hybrid fiber coaxial network 1, comprising CMC 7 located in headend 5 and MCCMs 100 connected to the headend via coaxial cables and, optionally, optical fibers. *See* Ex. 1011, 7:42–8:12. The MCCMs 100 are also connected to customer premises equipment 6 and local measurement controller 8. *See id.* The CMC instructs the MCCMs to perform signal measurements and

collects, evaluates, and stores the measurement results received from the MCCMs. *See id.* at 8:35–50.

Renken's MCCM 100 includes cable port 18 connected to upstream transmit circuit 10 and downstream receiver circuit 20. *See id.* at 9:41–43; Fig. 2. Controller 200 is connected between data port 80, transmit circuit 10, and downstream receiver circuit 20. *See id.* at 9:61–62; Fig. 2. Controller 200 includes processor 50, RAM 80, and non-volatile memory 70. *See id.* at 10:11–13. Processor 50 runs programs responsible modem activities such as providing customer data to transmit circuit 10 and processing demodulated downstream data 27 received from downstream receiver circuit 20. *See id.* at 10:15–24.

Renken's Figure 3 is reproduced below.

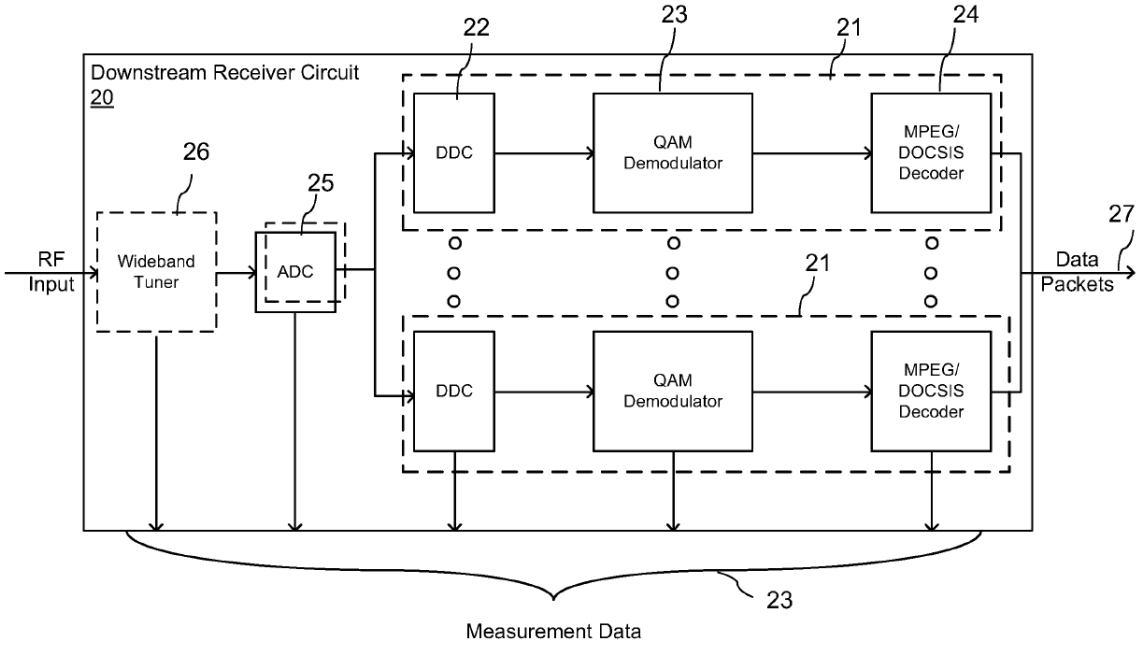

Fig. 3

Renken's Figure 3 is "a schematic block diagram of a downstream receiver circuit including a plurality of tunable receivers." Ex. 1011, 5:40–41.

In this embodiment, downstream receiver circuit 20 includes a plurality of constituent downstream channel receivers 21, each capable of demodulating a

single downstream channel. *See id.* at 10:59–62. Each downstream channel receiver 21 includes digital down converter ("DDC") 22, followed by a quadrature amplitude modulation ("QAM") demodulator 23, which in turn is followed by a DOCSIS/MPEG decoder 24. *See id.* at 6:27, 36, 11:19–22. "Optionally, a wideband tuner 26, which may be shared between multiple receivers, and one or more ADCs 25 may be connected between the input of the receivers 21 and the cable port." *See id.* at 11:22–25. Tuner 26 receives analog RF data and converts it to corresponding signals centered at an intermediate frequency. *See id.* at 11:32–36. ADC 25 converts the analog output from received from tuner 26 into a digitized intermediate frequency signal. *See id.* at 11:39–40.

2. Renken as Prior Art

The Petition, which was filed on February 16, 2024, asserted that Renken is entitled to a priority date of February 18, 2011, "[b]ecause at least one claim of Renken is entitled to the filing date of the Renken Provisional." Pet. 20 (citing *Dynamic Drinkware, LLC v. National Graphics, Inc.*, 800 F.3d 1375, 1381 (Fed. Cir. 2015)). The Petition then provided a claim chart purporting to read claims 1 and 10 of Renken on Renken's provisional. *See* Pet. 21–23.

As Patent Owner points out, however, the Federal Circuit issued *In re Riggs*, 131 F.4th 1377 (Fed. Cir. 2025), on March 24, 2025. Riggs concluded that "[a] reference does not constitute prior art for all that it teaches as of its provisional application's filing date solely because a particular claimed invention—which most often does not specify everything in the written description—is adequately supported by the provisional application." *Id.* at 1385. Instead, one seeking to rely on the date of a provisional for an issued patent (as is the case here) must show that the provisional provides written description support for the specific disclosures that are relied on to support the unpatentability analysis. *See id.*

We recognize that *Riggs* was decided after the Petition was filed and after Petitioner's reply was filed. However, Petitioner did not seek leave to provide us with any further analysis. As the law now requires that a proponent identify, in the provisional, the subject matter of the patent that is being relied upon in order to gain the benefit of the provisional filing date, and that has not been done, we conclude that Renken is only entitled to its February 17, 2012 filing date, meaning that it is not prior art to the '008 patent, which claims priority to a September 11, 2011 provisional. The Petition states that "[t]he earliest possible priority date for the claims of the '008 patent is September 8, 2011, the filing date of U.S. Provisional Application No. 61/532,098" (*see* Pet. 13), and at no point does Petitioner argue that the patent is not entitled to that date.

Because the Petition does not establish that Renken is available as prior art, we conclude that Petitioner has not shown claims 1–18 unpatentable in view of Renken or Renken and Cholas.

III. CONCLUSION

For the reasons given, Petitioner has met its burden of showing that claims 1–18 of U.S. Patent 8,792,008 B2 are unpatentable.[10] The results are summarized below:

---

[10] Should Patent Owner wish to pursue amendment of the challenged claims in a reissue or reexamination proceeding, we draw Patent Owner's attention to the April 2019 *Notice Regarding Options for Amendments by Patent Owner Through Reissue or Reexamination During a Pending AIA Trial Proceeding*. *See* 84 Fed. Reg. 16654 (Apr. 22, 2019). If Patent Owner chooses to file a reissue application or a request for reexamination of the challenged patent, we remind Patent Owner of its continuing obligation to notify the Board of any such related matters in updated mandatory notices. *See* 37 C.F.R. § 42.8(a)(3), (b)(2).

Claim(s)	35 U.S.C. §	Reference(s)	Claim(s) Shown Unpatentable	Claim(s) Not Shown Unpatentable
1–18	103(a)	Kamieniecki, Konstantinos	1–18	
7, 8, 15, 16	103(a)	Kamieniecki, Konstantinos, Yu	7, 8, 15, 16	
9, 17	103(a)	Kamieniecki, Konstantinos, Cholas	9, 17	
1–6, 9–14, 17, 18	103(a)	Renken		1–6, 9–14, 17, 18
9, 17	103(a)	Renken, Cholas		9, 17
Overall Outcome			1–18	

IV. ORDER

Accordingly, it is

ORDERED that Petitioner has shown by a preponderance of the evidence that claims 1–18 of the ’008 patent are unpatentable; and

FURTHER ORDERED that, because this is a Final Written Decision, parties to the proceeding seeking judicial review of the decision must comply with the notice and service requirements of 37 C.F.R. § 90.2.

FOR PETITIONER:

Frederic Meeker
Paul Qualey
Steve Chang
BANNER & WITCOFF, LTD.
fmeeker@bannerwitcoff.com
pqualey@bannerwitcoff.com
schang@bannerwitcoff.com
bwlitdocket@bannerwitcoff.com

FOR PATENT OWNER:

Jason Engel
Erik Halverson
Nathan Fuller
Vincent Galluzzo
K&L Gates LLP
jason.engel.ptab@klgates.com
erik.halverson@klgates.com
nathan.fuller@klgates.com
vincent.galluzzo@klgates.com