UNITED STATES PATENT AND TRADEMARK OFFICE

BEFORE THE PATENT TRIAL AND APPEAL BOARD

COMCAST CABLE COMMUNICATIONS, LLC,
Petitioner,

v.

ENTROPIC COMMUNICATIONS, LLC,
Patent Owner.

CASE: IPR2024-00442

U.S. PATENT NO. 9,825,826

DECLARATION OF SAMUEL H. RUSS, PH.D.

ENTROPIC EXHIBIT 2013
Comcast v. Entropic
IPR2024-00442

TABLE OF CONTENTS

I. INTRODUCTION 1

II. PROFESSIONAL BACKGROUND AND QUALIFICATIONS 2

III. MATERIALS CONSIDERED 4

IV. LEGAL STANDARDS 4

A. Claims 4

B. Specification 5

C. Prosecution History 6

D. Preponderance of the Evidence 6

E. Obviousness 7

1. Reasonable Expectation of Success 7

2. Motivation to Combine 8

3. Hindsight 10

4. Objective Indicia of Non-Obviousness 10

V. THE LEVEL OF ORDINARY SKILL IN THE ART 11

VI. OVERVIEW OF THE ’826 PATENT 12

VII. CLAIM CONSTRUCTION 17

VIII. TECHNICAL BACKGROUND 17

A. Cable Television Networks and the Associated Spectrum 17

1. Modulation, Analog Carriers, and Digital Transmissions 19

2. Different Data Communication Protocols for Set-Top Box Management 21

B. Typical Components in a Cable Set-Top Box 24

1. Analog to Digital Converter 24

2. Tuners 26

3. Decoder 29

C. Overview of Set-Top Box Design 30

IX. GROUNDS A 32

A. Overview of the Prior Art 32

1. Kamieniecki 32

2. Konstantinos 34

B.The POSITA Proposed by the Petition Would Not Have a Reasonable Expectation of Success in Combining Kamieniecki and Konstantinos as Proposed 35

1. The Integration of Konstantinos's Multi-Channel Receiver Would Result in a Complete Redesign of Kamieniecki's Set-Top Box 36

2. The Proposed POSITA Would Lack The Necessary Skills To Redesign Kamieniecki's STB 40

C. A POSITA Would Not Be Motivated to Add a Multi-Channel Receiver Like Konstantinos Discloses to Kamieniecki 42

1. DOCSIS Does Not Provide a Motivation to Make the Proposed Combination 43

2. The Proposed Combination Would Increase Cost and Complexity.....43

D. The Proposed Combination Would Fundamental Alter The Asserted Prior Art and Render them Inoperable 46

1. Fundamental Alterations to Kamieniecki 46

2. Fundamental Alterations to Konstantinos 49

3. The Proposed Combination Renders Kamieniecki Unfit For Its Intended Purpose 51

X. Grounds A-D do not disclose where the Prior Art Discloses or Renders Obvious Certain Claim Elements 54

A.The Proposed Combination Fails to Render Obvious "analyzing said selected first portion of said digitized signal to measure a characteristic of said received signal" 54

XI. GROUNDS E-F 57

A. Overview of U.S. Patent 8,649,421 (Renken).....57

B. Renken Fails to Render Obvious the "Controlling the Transmission of Network Management Messages" Element 59

XII.CONCLUSION 62

I, Samuel H. Russ, Ph.D., declare that I have personal knowledge of the facts set forth in this declaration and, if called to testify as a witness, could and would do so competently.

I. INTRODUCTION

1. I am over eighteen years of age, and I am competent to testify regarding the matters set forth in this declaration if called upon to do so.

2. I have been retained in this matter on behalf of the Patent Owner, Entropic Communications, LLC ("Entropic").

3. I submit this declaration at the request of K&L Gates LLP, counsel for Patent Owner in this proceeding.

4. I have been asked to provide an opinion in response to Comcast Cable Communications, LLC ("Petitioner") and its expert, Mr. Lett, in this proceeding regarding whether the Petition has established whether claims 1-18 of U.S. Patent No. 9,825,826 ("the '826 Patent") are unpatentable under the United States Patent and Trademark Office's *inter partes* review standard of a preponderance of the evidence.

5. I understand Mr. Lett has already provided his opinions by declaration in Ex. 1002 and by subsequent deposition in Ex. 2014; however, if he is permitted to offer additional opinions, I reserve my right to respond to those should I be asked.

6. I am being compensated at my usual consulting rate or testimony rate of $450 per hour. My compensation is in no way dependent upon my opinions or testimony or the outcome of this proceeding. I have no financial interest in any party or in the outcome of this proceeding.

II. PROFESSIONAL BACKGROUND AND QUALIFICATIONS

7. A summary of my experience, qualifications, and current employment are included in my CV, which is attached as Appendix A. The following is a brief summary of my relevant qualifications and professional experience.

8. I obtained my Ph.D. in Electrical Engineering from the Georgia Institute of Technology (Georgia Tech) in 1991. I worked at a start-up company named DVT from 1992-1994, taught at Mississippi State University from 1994-1999, and worked at a company that designed point-of-sale retail payment terminals from 1999-2000.

9. From 2000-2007, I worked at Scientific-Atlanta ("S-A"), which was acquired by Cisco during my tenure in 2005. During my time at S-A, I had several responsibilities. I managed an advanced technology group that included individuals with a range of education and years of experience. Our group addressed manufacturing, supply chain, best practices in the field, hardware, and software and made major improvements to then-existing set-top boxes. I was involved in all stages of set-top box development, such as layout, high-speed digital design, emissions

considerations, gate array conversion, and designing with custom Application Specific Integrated Circuits ("ASICs").

10. I designed and developed set-top boxes that implemented a range of technologies, including home networking and multi-room video distribution. For example, my work with multi-room DVR set-top boxes, won an Engineering and Technology Emmy® Award. Many of the products I worked with were widely deployed throughout the cable TV industry because S-A's customers were the major television service providers at the time, such as Time Warner Cable and Cablevision.

11. Examples of the set-top boxes I help develop include the Explorer 4200 and the Explorer 8300. The latter was an extremely popular DVR set-top box and was being produced at a rate of 3 million per year when I left the company in 2007. The Explorer 4200 had a single video tuner and both a DOCSIS and conventional "out-of-band" tuner for set-top box management. The Explorer 8300 had two video tuners and both a DOCSIS and conventional "out-of-band" tuner for set-top management.

12. Since 2007, I have been a professor of Electrical Engineering at University of South Alabama. As a professor I have taught courses in embedded system design, signal integrity, cryptography, and microprocessors.

III. MATERIALS CONSIDERED

13. In the preparation of this declaration, I have analyzed the ’826 Patent (Ex. 1001), its file history (Ex. 1004), the Declaration of David B. Lett (Ex. 1002), and four prior art references: Kamieniecki (Ex. 1009), Konstantinos (Ex. 1010), Renken (Ex. 1011) and Renken’s provisional application (Ex. 1012). I also have considered the other documents or references cited in this declaration.

IV. LEGAL STANDARDS

14. Although I am not a lawyer, I have been advised on the relevant legal principles by Entropic’s counsel and have used them as a basis for my opinions.

A. Claims

15. I have also been informed and understand that terms in the patent claims must be read as they would have been understood by a “person of ordinary skill in the art” (“POSITA”) at the time of the claimed invention.

16. I understand that a POSITA is a person to which the claimed subject matter pertains with the capability of understanding the scientific and engineering principles applicable to the pertinent art. I understand that the following factors may be considered in determining the level of ordinary skill: the type of problems encountered in the art; prior art solutions to those problems; the speed with which innovations are made; the sophistication of the technology; and the educational level

of active workers in the field. I also understand that not every factor may be present and that one or more factors may predominate.

17. I understand that the claims within a patent set forth what the inventors have presented as their inventions. I understand that claims can be independent or in dependent form, meaning that they depend from the identified independent claims and add requirements to those claims.

B. Specification

18. I understand that there are other parts of a patent, including the abstract, the figures of a patent, the background of the invention, the summary of the invention, and the detailed description of the invention. I understand that these portions often are collectively referred to as the "specification" of a patent. I understand that technically, the claims are part of the specification, but that referring to the "specification" typically means referring to the written description of the inventions rather than the claims. I understand that the specification informs the understanding of the claims by, for example, describing the claimed invention and providing preferred examples of the claimed invention.

19. I have also been informed and understand that terms of a claim should be understood in the context of the claim as a whole. I also understand that the specification of the patent is relevant to the meaning of a claim term. I further understand that the claims must be read in light of the specification.

C. Prosecution History

20. I understand that the correspondence back and forth between the representative of the applicant, and the U.S. Patent and Trademark Office, leading up to the issuance of a patent is called the "file history" or "prosecution history." It has been explained to me that, in the process of obtaining a claim of a patent, the inventors and the examiner may make statements explaining their understanding of the scope of their claimed invention. It has also been explained to me that for a statement by the inventors to narrow the scope of a claimed invention, the statement must clearly and unambiguously limit the scope of an invention. I understand this is called "prosecution disclaimer" or "prosecution disavowal." I understand that the claim language, specification, and file history are referred to as "intrinsic evidence" or "the intrinsic record."

D. Preponderance of the Evidence

21. I understand that, unlike at the district court, patents subject to inter partes review, such as this proceeding, are not presumed to be valid, such that a lower burden of proof is used to judge the patentability of challenged claims. Unlike the district court's "clear and convincing" burden, here a "preponderance of the evidence" burden exists. I further understand that the "preponderance of the evidence" standard is met when the evidence shows that something is more likely true than it is not.

E. Obviousness

22. I understand that a patent claim may describe an invention that was new (i.e., not anticipated by any prior art reference), but nevertheless be invalid for "obviousness" if the differences between the patented subject matter and the prior art are such that the subject matter as a whole would have been obvious to a person of ordinary skill in the art at the time of the invention was made.

1. Reasonable Expectation of Success

23. I understand that an invention is not rendered obvious simply on the basis of two or more different disclosures that collectively disclose all of the claimed elements. In other words, an invention is not obvious just because all of the elements that comprise the invention may have been known in the prior art. Instead, a person of ordinary skill in the art must have had a reasonable expectation of success in pursuing the possibility that turns out to succeed and is claimed. In particular, I understand that knowledge of a goal does not itself render achievement of that goal obvious.

24. I also understand that determining whether or not a claimed invention would have been obvious requires assessing facts related to (1) the scope and content of the prior art, (2) the differences between the prior art and the claimed invention, (3) the level of ordinary skill in the art, and (4) any objective evidence ("secondary

considerations") of non-obviousness. I understand that this is known as consideration of the "Graham Factors."

2. Motivation to Combine

25. I further understand that an invention is not obvious just by demonstrating that each of its elements was, independently, known in the prior art. To prove that an invention is obvious, I understand that it can be important to point to a reason or reasons, such as a teaching, suggestion, or motivation, that would have prompted a person of ordinary skill in the relevant field to combine the elements in the way the claimed invention does. I understand that this is because inventions in most (if not all) instances rely upon building blocks already known, and claimed discoveries almost of necessity will be combinations of what, in some sense, is already known, therefore it can be important to point to such a reason or reasons. I understand that in identifying such a reason, the analysis need not require precise teachings in the prior art directed to the specific subject matter of the challenged claim.

26. I understand that it will often be necessary for a court to look to interrelated teachings of multiple patents and the background knowledge possessed by a person having ordinary skill in the art in order to determine whether there was an apparent reason to combine the known elements in the fashion claimed by the patent at issue. I understand that any need or problem known in the field of endeavor

at the time of invention and addressed by the patent can provide a reason for combining the elements in the manner claimed. I understand that when a work is available in one field of endeavor, design incentives and other market forces can prompt variations of it, either in the same field or a different one. I understand that the combination of familiar elements according to known methods may be obvious when it does no more than yield predictable results.

27. I also understand that a claim is not invalid as obvious if it is more than the predictable use of prior art elements according to their established functions.

28. Further, I understand that while predictability is a touchstone of obviousness, the concept of a "predictable result" under the law refers not only to the expectation that prior art elements are capable of being physically combined, but also that the combination would have worked for its intended purpose.

29. I also understand that if the prior art "teaches away" from combining known elements in the manner claimed by the invention at issue, discovering a successful way to combine them is less likely to be obvious. In particular, I understand that a reference may be said to teach away when a person of ordinary skill, upon reading the reference, would be discouraged from following the path set out in the reference, or would be led in a direction divergent from the path that was taken by the applicant, or would understand based on the reference that the line of development flowing from the reference's disclosure is unlikely to be productive of

the result sought by the applicant. Likewise, I understand that similar subject matter may not be sufficient motivation for a person of skill in the art to combine references if the references have conflicting elements.

30. Further, I understand that even if a reference does not necessarily "teach away," the reference's statements regarding preferences are relevant to a finding regarding whether a person of ordinary skill would have had reason to combine that reference with another reference

3. Hindsight

31. I also understand that one must be cautious and resist the temptation to rely on hindsight reasoning when attempting to combine references to suggest that a claim may be obvious. It is important to analyze validity based on the perspective of one of skilled in the art at the time of the invention, which for this case I have been asked to assume is September 8, 2011, and which I understand is the date Mr. Lett and the Petition use as the priority date of the '826 Patent.

4. Objective Indicia of Non-Obviousness

32. I understand that objective indicia (or "secondary considerations") of non-obviousness or obviousness may be particularly probative and helpful in avoiding hindsight.

33. I understand that industry praise is considered an objective indicia of non-obviousness. This is because industry participants, especially competitors, are

not likely to praise an obvious advance over the known art. I also understand that, for the industry praise to be relevant, it must be tied to the claimed invention. This means that there must be a nexus between the industry praise and the patented technology.

V. THE LEVEL OF ORDINARY SKILL IN THE ART

34. Mr. Lett identifies that the relevant person of ordinary skill in the art ("POSITA") "would have had a degree in electrical engineering or a similar discipline, three-to-four years of experience working with television signal processing and communication systems. Additional education may substitute for professional experience and significant work experience may substitute for formal education." Ex. 1002, ¶ 45.

35. For purposes of responding to Petitioner and Mr. Lett, my analysis and opinions below assume that Mr. Lett's definition of a POSITA is correct, and I therefore apply my analysis and come to my opinions from the perspective of that POSITA in this technological field in the relevant time frame, unless stated otherwise.

36. I satisfied this definition of a POSITA before the priority date of the '826 Patent. I consider myself an expert in the relevant field of technology for the '826 Patent.

VI. OVERVIEW OF THE ’826 PATENT

37. I understand that the ’826 Patent has a filing date of November 23, 2015, and that it ultimately claims priority to an earlier U.S. Provisional Application that was filed on September 8, 2011. Ex. 1001, cover. Therefore, I use September 8, 2011, as the priority date of the ’826 Patent for my analysis. I understand that Mr. Lett opines that the ’826 Patent is not entitled to a priority date of September 8, 2011, and that the priority date should be September 10, 2012, which is the filing date of the application that issued as U.S. Patent 8,792,826. Ex. 1002, ¶ 41-43. None of my opinions change if the priority date is found to be September 10, 2012.

38. It is important for network-based service providers, sometimes referred to as Multi-Service Operators (“MSOs”) in the cable TV industry, to monitor the spectrum received by customers to ensure the spectrum remains within certain network parameters. Ex. 1001, 1:44-46. If the network parameters were to fall outside acceptable bounds, the user may experience unacceptable performance. Ex. 1001, 1:50-52. Thus, MSOs needed a means of monitoring the spectrum so they could identify when the spectrum fell outside acceptable parameters.

39. Prior to the ’826 Patent, MSOs had limited options to monitor the spectrum received at the customer’s premises. As of the priority date, the conventional means of monitoring the spectrum received by a user was to send technicians to the user’s premises to investigate and fix issues. This means of

spectrum monitoring was "too costly and impractical for use in customer-premises equipment (CPE)." Ex. 1001, 1:53-55.

40. These on-site visits (what we referred to as "truck rolls" in the industry) were impractical for many reasons. First, there was a small window of time when technicians could perform on-site visits between when technicians could work and customers would permit access to their premises. Second, interacting with the customer to find this small window of time would further frustrate a customer already frustrated with service issues. Third, on-site visits were not a proactive means of spectrum monitoring because usually MSOs only sent technicians to a customer's premises after the customer called to complain of unacceptable quality or a complete failure of their service. These on-site visits also would further interrupt the customer's service while the technician was trying to diagnose and fix the problem that was causing the network parameters to fall outside acceptable bounds.

41. In addition to truck roles, some CPE had the ability to take a measurement and report that measurement to the MSO. However, these systems often interrupted the customer's service because the CPE would use the same data processing equipment to conduct the signal analysis. Thus, MSOs typically only used this ability during off-peak hours to avoid interrupting the customer. Additionally, CPE of the prior art could only measure small portions of the downstream spectrum; therefore, its data was of limited use to MSOs. Accordingly,

there was a need for a less expensive method by which network service providers could monitor the quality of service provided to a customer's premises without interrupting service.

42. To meet this need, the '826 Patent describes systems and methods for spectrum monitoring of networks, such as cable television networks, using customer premises equipment ("CPE"). Ex. 1001, Abstract, 3:15-4:22. Thus, by using the method and systems of the '826 Patent, MSOs are able to monitor the condition of their network without interrupting customer services.

43. To implement this non-disruptive network monitoring, the '826 Patent discloses various embodiments of a receiver that generally includes (1) an analog-to-digital converter located in an RF front-end 158 that receives and digitizes a signal spanning a certain set of frequencies, which can be either the entire received spectrum or a discrete subset of frequencies. *Id.*, 3:22-30. The system also includes a channelizer which is capable of selecting specific portions of the outputs of the front-end 158 and then concurrently outputting the selected portions to two other components: a monitoring device 154 and a data processing device 156. *Id.*, 3:32-3:45-4:18. The monitoring device and data processing device can be arranged in parallel. *Id.*, 4:19-22. This allows for the system to monitor actual signal conditions at the customer's premises without interrupting service to the customer because the data processor is recovering information along a separate processing path.

44. More specifically, the front-end 158 (shown in blue below) receives an analog signal that spans a certain set of frequencies. This set of frequencies could include the entire received signal that spans from the lowest frequency "F_{lo}" to the highest frequency "F_{hi}" and would include the entire television spectrum (*e.g.*, signal S in Fig. 1B below). *Id*., 3:22-31, 5:58-6:6. The signal is digitized using one or more analog-to-digital converters (ADCs) located in the front-end 158, resulting in digital signal "D" depicted in Figure 1B below. *Id*.

45. A channelizer 152 (shown in green below) is capable of selecting a portion of the digitized signal for output to a signal monitor or analyzer 154 (shown in red below) and a portion of the digitized signal for output to a data processor 156 (shown in purple below). *Id*., 3:31-40, 4:19-22, Fig. 1B. As discussed above, the channelizer is able to output concurrently a portion of signal D to the signal monitor or analyzer 154 and data processor 156. *Id.* The channelizer 152 is further capable of selecting for outputting to either or both of the parallel monitoring and data processing modules (1) all of signal D, or (2) any portion or portions of the signal D. *Id.,* 6:16-35.

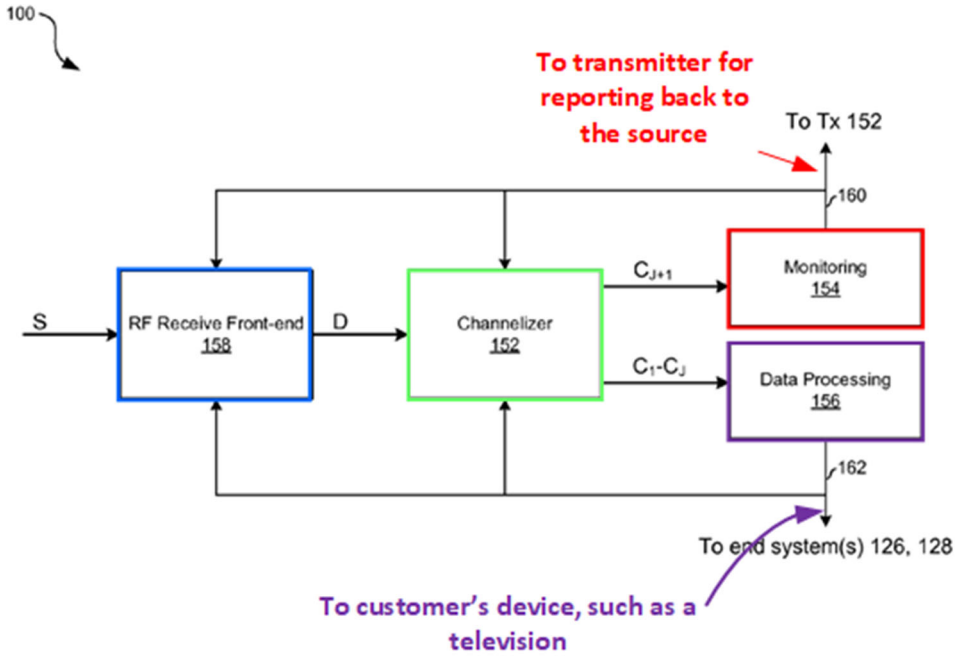

Id., Fig. 1B (annotated).

46. The '826 Patent's receiver is also capable of controlling the transmission of "network management/maintenance messages." *Id.*, 3:4-15, 3:60-4:2; *also id.*, cls. 1 & 10. These network management messages play a role in maintaining the network as these messages may provide, for example, network status updates that indicate whether the network is operating correctly. *Id.*, 3:60-4:2. In response to the status updates, equipment at the headend may take actions to address any issues in the network, for example, by adjusting transmission parameters. *Id.*, 3:11-15. By having the receiver provide regular status updates via network management messages, the provider can monitor network parameters remotely to ensure that they do not fall outside acceptable bounds, thereby addressing the problems of prior art solutions. *See id.*, 1:44-55.

VII. CLAIM CONSTRUCTION

47. I understand that my analysis requires an understanding of the scope of the claims of the ’826 Patent. I understand that claim terms are generally given their ordinary meaning to a person of ordinary skill in the art.

48. I have reviewed Mr. Lett’s opinions related to claim construction and the claim construction order entered in *Entropic Comms., LLC v. Charter Comms., Inc.*, 2:22-CV-00125-JRG (E.D. Tex.). Ex. 1002, ¶¶ 47-52, Ex. 1020. Based on my review of the ’826 Patent, intrinsic record, previous claim constructions, and Mr. Lett’s opinions, I have no reason to dispute the constructions the Petition used. Therefore, except for the terms previously constructed, I have used the ordinary interpretation as would have been understood by a POSITA reading the patent specification as of the priority date for my analysis.

VIII. TECHNICAL BACKGROUND

A. Cable Television Networks and the Associated Spectrum

49. In its modern form as relevant to the ’826 Patent and the prior art analyzed by Mr. Lett, a basic cable television network includes a headend that serves as the origination point for downstream signals in the cable network, trunk cables leading from the headend, distribution cables that connect to a trunk cable and distribute signals through a neighborhood, drop cables that connect a home to a distribution cable, and terminal equipment in the user’s home. Ex. 1002, ¶ 54. This

terminal equipment is sometimes referred to as "customer premises equipment" ("CPE"). In a cable network, the downstream refers to signals traveling from the headend to CPE and upstream is the reverse (i.e., signals travel from CPE to the headend).

50. Although modern cable TV networks rely on a combination of fiber and coaxial cables to deliver televisions signals (Ex. 1002, ¶ 55), the first cable television systems relied on a central, or community, antenna that received television signals via radio waves in one of three different frequency blocks: from 54-88 MHz, from 180-216 MHz, and from 470-890 MHz. Early systems were limited to these frequency blocks because the Federal Communication Commission only allowed television signals to be broadcast on these frequency ranges. As television grew in popularity, there was a need to deliver more television signals.

51. To meet this need, cable television systems started using coaxial cable to deliver television signals because television signals transmitted via cable would not interfere with radio signals traveling through the air. Thus, by using cables, television signals could be placed anywhere in the RF spectrum. Presently, cable television networks use frequences between 54-864 MHz, with some systems able to utilize frequencies around 1 GHz, for the downstream and frequencies between 5 to 42 MHz for the upstream. Ex. 1002, ¶ 57.

1. Modulation, Analog Carriers, and Digital Transmissions

52. Despite the increase in available frequencies, cable television networks needed to increase the information carrying capacity of their networks to meet the ever-growing demand for television content by customers. Cable network providers began utilizing various modulation and digital compression techniques to maximize the amount of information being transmitted on the allocated spectrum.

53. First, modulation increases the amount of information being transmitted because it allows for television signals to be arranged in a manner that avoids interference. Generally, modulation is the process by which information is placed on a "carrier" signal. Ex. 1026, p. 58. As applied to cable television networks, modulation is used to allocate different television signals (sometimes referred to as baseband signals) to different frequency bands to ensure that different television signals do not interfere with each other. *Id.* Thus, by placing television signals on a carrier and then altering the carrier's frequency, cable network providers can combine different television signals into a single composite signal for transmission. *Id.* A specific band of frequencies within this composite signal is referred to as "channel," which is not to be confused with how channels is used colloquially (e.g., "The Golf Channel"). *Id.*

54. Second, digital compression techniques also allow for more television signals to be placed within the same channel. Originally, television signals were

transmitted via RF frequency carriers in analog format because it is cheaper and easier than transmitting digital television signals. Ex. 1026, p. 90. With the reduction in the cost of components needed to generate and process digital signals, cable network providers began to convert the analog baseband to digital for transmission for a variety of reasons. Ex. 1026, p. 90. The baseband is not to be confused with the carrier signal, which is always an analog signal for transmissions over coaxial cable in cable networks, even today. The baseband signal is the actual television signal produced by a television camera. *See* Ex. 1026, p. 58 ("A television camera produces signals that are proportional to the strength of the light in the image and includes synchronization pulses. . . This is an information-bearing baseband signal because the frequencies of this signal extend from zero to the maximum produced by the television camera.").

55. The baseband signal is digitized (i.e., converted from a continuous wave form to a series of discrete 1's and 0's) so that it can be transported and compressed so that it occupies less bandwidth. Ex. 1026, p. 90. Generally, this compression is accomplished by removing unnecessary information contained within the signal. One of the most widely used digital compression formats is the Motion Picture Expert Group ("MPEG") format, specifically the MPEG-2 format. Ex. 1026, p. 122. The digitized video and audio is compressed and encoded using the MPEG format to generate "elementary streams." Ex. 1026, p. 130. The

elementary streams are packetized and multiplexed together into a single digital bitstream called a multiple-program transport stream ("MPTS"). Ex. 1026, p. 131. The MPTS is then modulated onto the analog carrier for transmission from the headend to the CPE. The use of a MPTS is beneficial to the cable network operator because it allows multiple television signals to be combined in the same channel of the analog carrier, thus maximizing the information carried in a channel. Again, the carrier remains in analog form throughout transmission. In the cable industry, we called this "digital cable". It is a bit of a misnomer because, even if a television channel carries digital content, it is still an analog waveform when it travels over the coaxial cable.

2. Different Data Communication Protocols for Set-Top Box Management

56. Because of modulation and digital compression, the cable television industry could provide additional programming and services. Ex. 1026, p. 89. These additional services, however, often required the headend and a STB to exchange data (i.e., non-television signals) to manage these additional services. Ex. 1026, p. 31. For example, cable television providers began offering premium channels (e.g. HBO) and pay-per-view programming, both of which require a customer to receive authorization to view these additional services. Thus, cable television providers

developed different approaches by which it could communicate authorizations and other set-top box management data to customers.

57. One such approach was allocating and designating a subset of channels in the downstream spectrum for the sole purpose of transmitting set-top box management data. These channels became known as "out-of-band" ("OOB") channels. The remaining channels over which television signals would be transmitted would be referred to as "in-band" ("IB") channels.

58. Two industry standards were established for the OOB channels: (1) SCTE 55-1, originally developed by General Instrument, and (2) SCTE 55-2, originally developed by Scientific Atlanta. Ex. 1026, p. 415. For downstream OOB channels, these would occupy the 70-130 MHz frequencies, but for channel spacing, SCTE 55-1 used 1.8 MHz channel spacing; whereas, SCTE 55-2 used 1 or 2 MHz. *Id.* For downstream IB channels, a separate standard established that the channel spacing in North America is 6 MHz. Ex. 1002, ¶ 57.

59. Interestingly, the two OOB standards differ in how information is communicated upstream from the set-top box to headend via the return path. SCTE 55-1 utilizes either a polling method or the "aloha" method. Ex. 1026, p. 415. Taking the polling method first, this can be thought of as a "speak only when spoken to" method of transmitting information to the headend, in that, the set-top box would only send information to the headend in response to a request (i.e., a poll) from the

headend. Ex. 1026, pp. 416-17. On the other hand, the aloha method is where the set-top box transmits information to the headend without being prompted and awaits an acknowledgment from the headend. Ex. 1026, pp. 417. If the set-top box does not receive an acknowledgment from the headend, the set-top will resend the information. Ex. 1026, p. 417. A receiver located in the headend demodulates the QPSK upstream signals and supplies the signals to the headend management system. Ex. 1026, p. 418.

60. In contrast, SCTE 55-2 assigns each set-top box a specific time when it is able to transmit information to the headend. Ex. 1026, p. 419. This would be an example of a time division multiple access (TDMA) system. To ensure all of the set-top boxes are synchronized, the set-top box receives a specific message from the headend called a "SL-ESF START" message. Ex. 1026, p. 419. The set-top box then requests one or more of the upstream time slots in which to talk to the headend. The headend acknowledges the request and assigns an available time slot for that set-top box. Ex. 1026, p. 421. The headend would remain the same between the two standards; therefore, like for SCTE 55-1, a receiver located in the headend demodulates the QPSK upstream signals sent from the set-top box and supplies the signals to the headend management system. In other words, the two are similar in that a downstream message is needed to transmit upstream and both use the 70-130 MHz frequency band.

61. An entirely different protocol for communicating data between a cable modem, which could be embedded in a set-top box, and the headend is the Data Over Cable Service Interface Specification ("DOCSIS"). Ex. 1026, p. 421. The cable industry created the DOCSIS standard to allow for additional services to be used over the cable plants originally designed for television. One of the main services that DOCSIS enables is Internet. DOCSIS also makes use of an upstream transmitter (*e.g.* this can carry a user's request to view a Web page) and, like the SCTE standards, a downstream message is needed to obtain permission to transmit upstream. Thus, while SCTE 55-1 and 55-2 have differently sized channels for OOB channels 1.8 MHz or between 1-2 MHz, respectively), DOCSIS utilizes equally sized 6 MHz channels that use QAM modulation across the spectrum regardless of whether the channel is carrying television or data. This is unlike the IB and OOB channel arrangement which used different channel sizes for carrying television signals (6 MHz) and for carrying data (1.8 MHz or 1-2 MHz).

B. Typical Components in a Cable Set-Top Box

1. Analog to Digital Converter

62. An analog-to-digital converter ("ADC"), as the name implies, converts an analog signal to a digital signal by taking a "sample" of the analog signal at set interval of time. The samples serve as a digital representation of the analog signal. According to the Nyquist Theorem, if a signal is sampled at least twice as frequently

as the maximum signal frequency it contains, it can be perfectly recovered with no loss of information. Ex. 1026, p. 96. For example, to sample a system with 300 MHz of bandwidth, it must be sampled at 600 MSamples / second at a minimum. It follows that, as the frequency range to be digitized gets larger, the sampling rate must increase to avoid losing information in the conversion.

63. However, there are a range of design considerations that accompany increasing the sampling rate. For example, cable RF circuits require the ability to attenuate high power levels and amplify low levels, in order to be installed in a wide variety of places. These amplify/attenuate circuits require demanding levels of linearity and level gain across the frequency spectrum. Thus, as frequency spectrum being digitized increases, the complexity of the circuit increases as it requires level gain across hundreds of megahertz of spectrum. The former (linearity) is due to subtle effects of non-linearity on wideband cable. Effects such as CSO (composite second order) and CTB (composite triple beat) can cause lower frequencies to interfere with higher frequencies. Ex. 2018, p. 4.

64. This means that an ADC capable of digitizing a large range of frequencies requires a much more exacting design than ADCs previously used in the art. As will be explained below, ADCs only needed to be capable of digitizing a single-channel, which is at most 6 MHz, because conventional tuners only selected a single channel. However, to support wideband or full-spectrum capture channel

selection arrangement, the ADC must be capable of digitizing up to the entire received spectrum, which is potentially hundreds of megahertz. This requires an "high speed" ADC that can digitize hundreds of Megahertz instead of 6 MHz. Again, this is a significantly more complicated design because not only the ADC but also the entire analog circuit feeding it must keep the signal level consistent over a wide range of frequencies. Not only will this require more expensive circuit components, but the time required to execute the design and the skill level of the designer will also increase.

2. Tuners

65. One essential component in a set-top box is a tuner. The role of the tuner is to isolate a single channel and select it for further processing. Over time, how tuners are implemented has shifted from a conventional tuner architecture to a digitization-first architecture, such as wideband, full-band/full-spectrum capture.

66. A conventional tuner realizes the complete channel selection process in the analog domain and it delivers at its output a single channel at a very convenient frequency for further baseband processing. Ex. 1010, ¶ [0004]. This was the technology used as of November 2826. *See* Ex. 1010, ¶ [0001], cover. In general, a conventional tuner selected a channel by frequency-shifting the input from the input frequency (e.g. 76-82 MHz) to an output centered at some intermediate frequency (at Scientific-Atlanta, 47 MHz). There was then a bandpass filter centered at 47 MHz

to isolate the single channel. By converting and then filtering, the filter can be constructed to work at a single frequency. Thus, a conventional tuner equals a single television channel selected. If no other tuners are included, then a set-top box employing a single conventional tuner means the set-top box can only select and process a single channel at a time. Stated differently, each television program in use by a subscriber (e.g. for watching or recording) required a dedicated tuner.

67. Conventional tuners can be implemented within a set-top box in different ways. When I started at S-A, tuners were manufactured by companies and sold as a unit to us. They were in rectangular metal cans and so we called them "can tuners". For example, the Explorer 4200, which I helped develop, used can tuners. Later, integrated circuit technology advanced to the point where a single-chip tuner was possible, and we called these "silicon tuners". They were located on the circuit board, and so much smaller, but they still only output a single 6-MHz channel. For example, the Explorer 8300, which I also helped develop, used silicon tuners. Indeed, it was one of the first set-tops at S-A to use silicon tuners.

68. Up to this point, I have focused on tuners designed to select a 6 MHz television channel. These types of tuners are referred to as in-band tuners.

69. Beyond IB tuners, there are tuners that are specifically designed to handle different channel formats and bandwidths (e.g., OOB, DOCSIS). Thus, if a cable operator is sending set-top box management information via the OOB channel,

set-top boxes would need a OOB tuner to receive this information. Similarly, if a cable operator is using DOCSIS to communicate set-top box management information, a DOCSIS tuner would be needed. While it is true that a DOCSIS tuner is quite similar to an IB tuner, it is also true that if a cable operator elects to use DOCSIS instead of OOB to manage set-top boxes, the set-top boxes must switch from a less expensive OOB tuner to a more expensive DOCSIS tuner. In other words, the selection of management techniques dictates which tuners to use.

70. During my time at S-A, one major advance in the world of set-top boxes was the advent of digital video recording, or DVR. These set-top boxes included a hard disk drive that could be used to record video for later playback, and it rapidly became extremely popular. My third set-top box, the Explorer 8300, was being produced at a rate of 3 million per year when I left the company in 2007.

71. Because DVR set-tops could show television and record television at the same time, they needed extra tuners. For example, if one wants to watch one show and record another, one needs two conventional IB tuners (in addition to the OOB or DOCSIS tuner). Other technologies, such as picture-in-picture, increased the demand for multi-channel processing of television signals.

72. As demand for multi-channel television processing increased, it became apparent that adding more conventional single-channel tuners created issues. Ex. 1010, ¶¶ [0006]-[0009]. Thus, set-top box designers decided to take an entirely

new approach to channel selection that did not rely on the conventional tuner architecture. This new approach relied on flipping the traditional order and digitizing multiple channels in the received analog signal *first* and then selecting among the digitized channels.

73. However, this new approach is not without its own issues. For example, if one was to digitize large portions of downstream spectrum in order to implement this new approach, it would require an extremely high sampling and data rate as described in the preceding section. Ex. 1010, ¶ [0051]. Although the technology to accomplish this digitization existed as of the '826 Patent's priority date, it would create a new set of design challenges that are not present with conventional tuners. *See infra* ¶¶ 90-91.

3. Decoder

74. A "decoder" is a signal-processing element that converts the bitstream of each data channel into a usable form. For example, in the headend, a baseband signal would be converted to a digital signal, encoded in the MPEG-2 format, placed on an analog carrier signal and then transmitted over the HFC network to the set-top box. *See supra* ¶¶ 54-55. Once the carrier signal with the encoded information is received and selected by a conventional tuner, a decoder would receive the output of the conventional tuner and "decode" the MPEG-2 stream carried on the selected channel to recover the baseband signal. This is the same understanding of "decoder"

that Mr. Lett applied in his declaration. *See* Ex. 1002, ¶ 163 ("After an MPEG stream is received, it will need to be decoded ('processed') to recover the audio and video so that it can be displayed for a user.").

C. Overview of Set-Top Box Design

75. Designing a new set-top box is an extremely long and difficult process. I was an engineering manager at Scientific-Atlanta and oversaw the design and development of new set-top boxes.

76. The process would often start with identifying the desired functionality that needed to be included. This would include, for example, how many channels did the set-top box need to be able to process simultaneously. Identifying the desired functionality was important because of the price sensitivity of the cable industry. While at S-A, we would often say that "pennies matter" because if we made design choices that added pennies onto the final cost of the set-top box, we ran the risk of our customers choosing our competitors over us. Thus, it was important to avoid including unnecessary functionality of the intended goal.

77. For example, around the priority date, industry participants would offer a "basic" set-top box with the most basic of functionality available. This would serve as a low-cost option to customers that only need the most basic tier of cable services. The Explorer 4200 is as an example of a basic set-top box. Because it was basic, it was one the less expensive items on the market and it sold very well.

78. I understand from my review of Mr. Lett's deposition transcript that he testified that designing a set-top box would be a long process that involved large teams of individuals with a range of education and experience who are given tasks according to their education and experience. In his deposition, Mr. Lett made several statements about set-top box design. He explained that new models take 6-12 months to design once a new ASIC (custom chip) is available, that design and development teams can span 100 people, that there are numerous challenges to solve (especially as complexity of the set-top increases), and that costs of set-top boxes are tracked down to the level of cents. Mr. Lett was my manager at S-A and I can confidently agree with all of these statements.

79. One example of how long and difficult the design process could be was when we switched from can tuners to silicon tuners. The first DVR model to use silicon tuners was the set-top my group designed, the Explorer 8300. The changeover required years of effort, including extensive meetings with Microtune (the vendor that provided the silicon tuner to operate according to our specifications), measuring test boards, efforts to manufacture prototypes, efforts to debug the silicon-tuner chips themselves, re-writing the tuning-control software nearly completely, and the work needed to transition the hand-made RF circuits to mass production. At S-A, we had 5-6 full-time RF engineers, most with over 20 years of experience, who were responsible for designing and developing new set-top boxes. Their collective work

on the project easily added up to ten person-years of work within S-A. Moreover, this time was spent developing the silicon tuner, not designing the rest of the set-top box around it. More importantly, it was years of efforts of highly skilled persons, many of whom had Ph.D.'s (like me) and master's degrees. Without exaggeration, this work was carried out by one of the best RF technical staffs in the world.

IX. GROUNDS A-D

A. Overview of the Prior Art

1. Kamieniecki

80. U.S. Patent publication US 2005/0114879 to Kamieniecki ("Kamieniecki") was filed in 2003. Ex. 1009, cover. Notably, it is assigned to General Instrument Corporation ("GI"). GI, which was later acquired by Motorola, was, along with S-A, one of the two primary vendors of cable television equipment, and specifically cable set-top boxes. Indeed, GI and S-A were often called "the duopoly" because both companies had proprietary conditional access systems and cable operators purchased set-top boxes almost exclusively from these two companies.

81. Kamieniecki describes a conventional "single-tuner" cable set-top box. Consider Figure 1 from the application.

FIG. 1

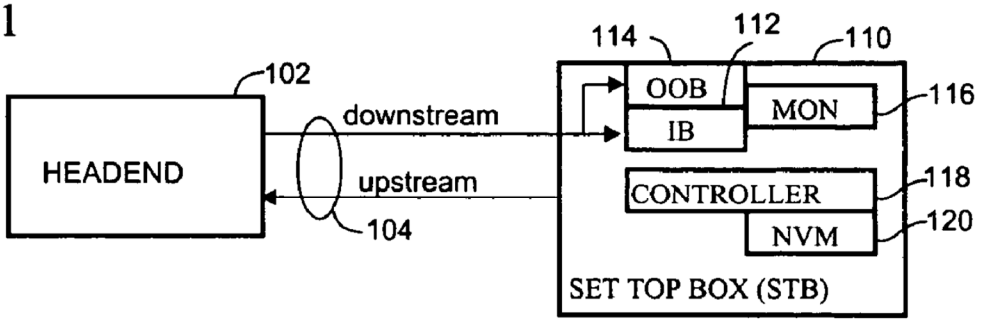

82. Based on Kamieniecki's disclosure, a POSITA would understand that Kamieniecki is describing a basic single-tuner set-top box from around 2003. *See* Ex. 1009, ¶¶ [0013]-[0014]. Based on my experience at S-A, I understand the set-top box disclosed in paragraphs 13 and 14 of Kamieniecki contains conventional components that would be included in a single tuner set-top box as of the priority date of the '826 Patent.

83. A POSITA would similarly understand that Kamieniecki discloses conventional IB and OOB tuners as understood in the art at that time given how Kamieniecki describes the components of the disclosed set-top box. Kamieniecki discloses that the IB tuner allows a subscriber to receive "audio and video content" and the OOB tuner is for receiving instructions from the headend. Ex. 1009, ¶ [0013]. Kamieniecki also specifically states "other details of the STB, which are well known to those skilled in the art, are omitted for illustrative clarity." Ex. 1009, ¶ [0014].

84. Based on Kamieniecki disclosing only a single IB tuner and single OOB tuner, Kamieniecki's set-top box could select and monitor only a single IB channel and a single OOB tuner at a time. Mr. Lett confirmed this understanding of Kamieniecki in his declaration and at his deposition. Ex. 1002, ¶ 74; Ex. 2014, 123:13-124:8.

85. Furthermore, Mr. Lett confirmed both in his declaration and at his deposition that Kamieniecki's set-top box waits for idle before gathering signal quality information. Ex. 1002, ¶¶ 74, 159; Ex. 2014, 128:21-129:14. Although Kamieniecki discloses "[m]any modifications and adaptations may be made thereto without departing from the spirit and scope of the invention as set forth in the claims" (Ex. 1009, ¶ [0026]), a POSITA would understand that tuning through the channel list while the set-top box was in use (i.e., not waiting for "OFF"/idle) would contradict the stated goal of Kamieniecki, which is to avoid disturbing "any viewer experiences." Ex. 1009, ¶ [0017].

2. Konstantinos

86. U.S. Publication No. 2010/0120386 ("Konstantinos") (Ex. 1010) was published on May 13, 2010, from U.S. Application No. 12/269,302, which was filed on November 12, 2826. Konstantinos is entitled "Multi-Channel Receiver Architecture and Reception Method" and discloses a multi-channel receiver comprising an ADC, a multi-band selector, and a multi-channel selector. Ex. 1010,

Abstract. The multi-channel receiver includes a number of channel selectors 207A-N that output a single channel to channel decoders. Ex. 1010, ¶ [0046]. In other embodiments, Konstantinos discloses a "multi-channel decoder" that is capable of decoding multiple channels simultaneously. Ex. 1010, ¶¶ [0106]-[0107].

87. Critically, a POSITA would understand that the multi-channel receiver of Konstantinos can output only a predetermined number of channels that is equal to the number of decoders. Konstantinos discloses that the number of channel selectors 207 "will determine the number of output streams that will be available." Ex. 1010, ¶ [0043]. A POSITA would also understand that the number of outputs would be equal to the number of decoders as each output stream represents a channel that may be further processed by a decoder. Ex. 1010, ¶ 43. Thus, the number of output streams is driven by the number of decoders. In other words, a POSITA would readily grasp, based on the express disclosure of resource limitations, that the system of Konstantinos only produces as many streams as there are decoders.

B. <u>The POSITA Proposed by the Petition Would Not Have a Reasonable Expectation of Success in Combining Kamieniecki and Konstantinos as Proposed</u>

88. I understand that Mr. Lett states that "a POSITA would have considered it obvious to modify Kamieniecki's STB 110 to use the Konstantinos multi-channel receiver in place of its separate IB and OOB tuners as this was a natural evolution of television technology . . . ." Ex. 1002, ¶ 127. From this, I understand Mr. Lett's

opinion is that the Petition's POSITA would entirely replace the IB and OOB tuners of Kamieniecki with the multi-channel receiver of Konstantinos with a reasonable expectation of success.

89. I disagree that there is a reasonable expectation of success that the Petition's POSITA would be able to make the proposed combination given the complexity involved with integrating the multi-channel receiver of Konstantinos into Kamieniecki's set-top box.

1. The Integration of Konstantinos's Multi-Channel Receiver Would Result in a Complete Redesign of Kamieniecki's Set-Top Box

90. It is my opinion that the proposed substitution of Kamieniecki's IB and OOB tuners with Konstantinos's multi-channel receiver would create a series of complex design decisions that would effectively cause a POSITA to redesign Kamieniecki's set-top box.

91. One of the first sources of complexity would be modifying Kamieniecki's set-top box to accommodate the ADC of Konstantinos's multi-channel receiver to sample the downstream spectrum from 54 MHz to 1 GHz. Mr. Lett opines that, for the proposed combination, "the IB and OOB channels of Kamieniecki would be the RF Input that is received by the Konstantinos multi-channel receiver 200," which are then digitized by ADC 204. Ex. 1002, ¶ 148 (citing

Ex. 1010, ¶¶ [0043], [0048]-[0049], [0116]). Paragraphs 43, 48, and 49 of Konstantinos teach the digitization performed by ADC 204.

92. However, ADC 204, as described in the cited paragraphs of Mr. Lett's declaration, would be extremely difficult to implement because of the sampling rate needed to digitize signals with around 1 GHz bandwidth. As described above, the Nyquist theorem provides that the sampling rate would need to be at least two times the largest bandwidth. *Supra* ¶ 62. Thus, as Konstantinos readily acknowledges, ADC 204 would most likely require a sampling rate of 2 GSamples/sec, which produces a data rate of 20-80 Gbits/sec. Ex. 1010, ¶ [0051]. In another embodiment, Konstantinos specifically discloses a sample rate of 500 MSamples/sec. Ex. 1010. ¶ [0100]. Accomplishing sampling rates of this magnitude requires a significant amount of power. Thus, additional power supplies would need to be added to Kamieniecki's set-top box to ensure Konstantinos's ADC received sufficient power to accomplish the analog to digital conversion and, because of the sensitive nature of ADC circuits, the power would require careful design and extensive filtering. *See supra* ¶¶ 62-64.

93. Moreover, incorporating Konstantinos's multi-channel receiver would require changes to the shielding of Kamieniecki's STB to minimize the interference generated by the multi-channel receiver. As described in Konstantinos, the extremely demanding analog to digital conversion followed by selecting a single

channel would create significant on-chip interference. Ex. 1010, ¶ [0051]. Thus, additional shielding would be needed to minimize the interference with other components in Kamieniecki's set-top box. For example, this is why even the silicon tuners inside my team's Explorer 8300 had extensive shielding mounted on the circuit board. In sum, to accommodate Konstantinos's multi-channel receiver, the Petition's POSITA would need to redesign Kamieniecki's set-top box to include a series of carefully selected components needed to incorporate Konstantinos's multi-channel receiver.

94. Another source of complexity would be accounting for the difference between DOCSIS and OOB channels as it relates to Konstantinos's channel selectors. Mr. Lett opines that "Kamieniecki's IB and OOB tuners use the same inputs (an RF signal) and same outputs (digital signal of the desired channels) as those of Konstantinos' multi-channel receiver chip." Ex. 1002, ¶ 151.

95. I disagree with Mr. Lett that the RF signals are the same between the two references because, although both Kamieniecki and Konstantinos teach an RF signal, the signals are formatted according to different protocols and use different modulations. Because the Petition relies on Kamieniecki to disclose the claimed "a signal that carries a plurality of channels, wherein said channels comprise one or both of television channels and data channels" (Petition, 31), the proposed combination would receive a signal that included both IB and OOB channels. As

discussed above, this means that there would be a mixture of channel bandwidths and the OOB channel would be modulated using QPSK modulation. *See supra* ¶¶ 56-61. Konstantinos, however, is not designed to handle different bandwidth because it receives a signal with only channel bandwidths of 6 MHz and modulated using QAM in accordance with the DOCSIS protocol. *Supra* ¶ 61.

96. Given this difference, a POSITA would have to reprogram the channel selectors of Konstantinos's multi-channel receiver to handle the different bandwidths and modulations. Specifically, for Konstantinos to be able to select OOB channels, it would have to be modified to accept 1.8-MHz or 1-2 MHz, QPSK-modulated channels in addition to 6-MHz, QAM-modulated channels. Neither the petitioner nor Konstantinos itself has suggested such a thing. If the POSITA did not reprogram Konstantinos, the cable operator would need to switch over from using OOB channels to manage set-top boxes to using DOCSIS to manage set-top boxes. This would be a major redesign of the cable operator's headend, necessitating removal of the QPSK modulators and replacement with components needed to support DOCSIS. Worse yet, the cable operator would likely need to keep the OOB-based management in place for set-tops already in the field. In other words, the operator must now install a new set-top management system to take advantage of the system of Konstantinos, even for low-end set-top boxes like those of Kamieniecki.

97. For all these reasons, it is my opinion that, in order for the references to be combined in the manner proposed, a POSITA would have to effectively redesign Kamieniecki's set-top box

2. The Proposed POSITA Would Lack The Necessary Skills To Redesign Kamieniecki's STB

98. As a former engineer at S-A, who was directly involved with the team designing set-top boxes, I do not believe that the Petition's POSITA would be able to redesign Kamieniecki's set-top box to achieve the proposed combination because the POSITA would lack the experience needed to address the above design challenges.

99. While at S-A, I directly oversaw an extensive redesign of certain S-A products that replaced can tuners—which were used in the Explorer 4200—with a silicon tuner—which was used in Explorer 8300. This changeover from can tuners to silicon tuners required years of effort by a large team of individuals with a range of education and experience levels. As Mr. Lett testified and I experienced while working at S-A, design teams often included individuals with Ph.D.'s or master's degrees and extensive experience. Ex. 2014, 33:1-12, 34:21-35:1, 35:5-11. Yet, despite the number of individuals and the advance degrees held by team members, it still took 5-6 full-time RF engineers, most with over 20 years of experience, to design and develop a new set-top box with silicon tuners. Part of the reason this

redesign took so long is because it required extensive meetings with Microtune—the vendor that provided the silicon for the tuner—and multiple design iterations in order for the silicon tuner to operate according to our desired specifications. This was easily ten person-years of work by highly skilled artisans to simply switch from conventional tuners to a silicon tuner.

100. The proposed replacement of Kamieniecki's IB and OOB tuners with Konstantinos's multi-channel receiver chip is more difficult than replacing conventional tuners with a silicon tuner like we did at S-A. This is true because the proposed replacement requires integrating an entirely new component into Kamieniecki—a high speed ADC—that necessitates extensive changes to components throughout the set-top box as described above. These changes are so extensive, especially redesigning the set-top box to provide the necessary power, that I would give this task to individuals with advanced degrees or with many more years of experience. I would do this because designing the power distribution for an ADC requires very specialized knowledge—regarding design consideration such as sampling rate, data transfer, thermal load on the ADC (i.e. are the components getting so hot that the circuit board will melt)—that I would not expect a less experienced team member, like the Petition's POSITA, to have. Additionally, I would not expect an individual with the experience of the Petition's POSITA to understand how to properly shield components to minimize interference because

shielding requires extensive experience to know what components would interfere with others. Although I don't think the Petition's POSITA would be able to accomplish the design of these tasks, I would trust the Petition's POSITA to double check that our devices complied with standards once we had designed them because this was a routine task. For example, once a more experienced individual designed and implemented a complex design, I would trust the Petition's POSITA to double check that the receiver was selecting a 6 MHz channel as required by various standards.

101. Given the difficulty in what is proposed and my experiences in the industry, I do not believe that the Petition's POSITA would be able to successful redesign Kamieniecki's set-top box in the manner proposed. Therefore, it is my opinion that there is not a reasonable expectation of success that the Petition's POSITA would be able to make the proposed combination.

C. A POSITA Would Not Be Motivated to Add a Multi-Channel Receiver Like Konstantinos Discloses to Kamieniecki

102. Mr. Lett opines that a POSITA would have been motivated to replace Kamieniecki's IB and OOB tuners with Konstantinos's multi-channel receiver "to enable simultaneous tuning and monitoring of larger numbers of channels (e.g., four or more) as required by new cable technologies such as DOCSIS 3.0." Ex. 1002, ¶ 149. Additionally, the Petition asserts that replacing the IB and OOB tuners of

Kamieniecki would reduce "cost and complexity through a single chip solution." *Id.*, ¶ 150. I disagree a POSITA would be motivated to make the proposed combination, and I disagree with Mr. Lett's stated reasons for the combination.

1. DOCSIS Does Not Provide a Motivation to Make the Proposed Combination

103. Beginning with DOCSIS, DOCSIS 3.0 does not require the simultaneous tuning and monitoring of different channels as Mr. Lett claims. *See, generally,* Ex. 2019. Mr. Lett has not cited to any DOCSIS standard to support his opinion concerning DOCSIS.

2. The Proposed Combination Would Increase Cost and Complexity

104. As for cost and complexity, it is my opinion that the proposed combination would actually increase cost and complexity.

105. Beginning with complexity, Mr. Lett's opinion that using a single integrated circuit (IC) would reduce complexity ignores the extensive alterations to Kamieniecki that would be needed to accommodate Konstantinos's multi-channel receiver. As described above, a POSITA would have to add additional power supplies, shielding, and reprogram the channel selectors so that the proposed combination would function. *Supra,* ¶¶ 90-97. Thus, by forcing complex digital signal processing in the form of Konstantinos's multi-channel receiver into

Kamieniecki's basic set-top box (*supra*, ¶¶ 80-87), the proposed combination increases complexity.

106. As for costs, Mr. Lett is not clear what costs would be saved by replacing Kamieniecki's IB and OOB tuners with Konstantinos's multi-channel receiver chip. *See, e.g*, Ex. 1002, ¶ 131 ("A POSITA would have recognized that using Konstantinos' multi-channel receiver in place of the Kamieniecki IB and OOB tuners would offer savings in terms of cost and component complexity."). To the extent cost savings are realized simply because two tuners are being replaced by a single IC, this opinion ignores other costs associated with the proposed combination and the cable TV industry's approach to set-top box design.

107. First, Mr. Lett's opinions ignore the steep initial cost associated with designing and developing the set-top box given the number of individuals and time it takes to develop a new set-top box. As described above and as Mr. Lett testified at his deposition, it typically would take at least 100 individuals approximately six to twelve months to develop a new set-top box. Ex. 2014, 25:8-19, 30:15-19, 31:11-14. Thus, the cost to simply design the proposed combination and ensure that it would function properly would be significant based on the time and number of individuals involved.

108. Second, the proposed combination would make Kamieniecki more expensive than necessary for its intended applications. As described above, the cable

TV industry is extremely price sensitive to the point that pennies matter. *Supra*, ¶¶ 75-79. Therefore, to keep costs down, a set-top box would be designed to only include the functionality needed for its intended applications. *Id*. A POSITA would recognize that Kamieniecki, with its single IB tuner, would be considered a "basic" STB designed intended for applications that only require a single channel to be selected at a time. In contrast, Konstantinos's multi-channel receiver was designed to select multiple channels. *See* Ex. 1010, ¶ [0011]. This type of functionality would be integrated into more advanced STBs that were intended to allow simultaneous viewing or recording of different channels, such as a DVR set-top box that could display one channel while recording others simultaneously. An example is the Explorer 8300 that my group designed.

109. Thus, by incorporating additional functionality into Kamieniecki's basic set-top box, the proposed combination would result in a more expensive set-top box than what was needed. By way of an analogy, replacing the IB and OOB tuners with Konstantinos's multi-channel receiver would be like replacing the engine of a Honda Accord with the engine from a Formula 1 race car. The Formula 1 engine would achieve a similar result as the engine of the Honda Accord—it would propel the car—but the Formula 1 engine would be overengineered and imbue the Honda Accord with capabilities that it was never designed for. In an industry where pennies

matter, it is my opinion that the added costs, even a minor increase in cost, would weigh strongly against a motivation to make the proposed substitution of elements.

110. Given this, it is my opinion that a POSITA would not seek to incorporate multi-channel functionality into a basic set-top box like Kamieniecki's because the applications for which Kamieniecki was intended do not demand multi-channel tuning.

D. The Proposed Combination Would Fundamental Alter The Asserted Prior Art and Render them Inoperable

111. To further demonstrate the lack of motivation to combine Kamieniecki and Konstantinos, the Petition's proposed combination fundamentally alters the architecture and functioning of both references. Additionally, if the proposed combination is made, it would be unable to report information.

1. Fundamental Alterations to Kamieniecki

112. Beginning with Kamieniecki, its principle of operation for conducting signal analysis is waiting until the STB 110 is "off" or idle. Ex. 1009, ¶¶ [0826], [0015], [0017], [0018], Fig. 2. Although the Board found that Kamieniecki "does not *require* collection of information only during idle times" (Paper 8, 17), the Board took this position because of Kamieniecki's disclosure that it "may" wait for idle, which is generally non-limiting language. However, both Mr. Lett and I agree that

the Board's initial reasoning was not correct because a POSITA would ***not*** understand this to be non-limiting language for the many reasons that follow.

113. Kamieniecki must wait for idle because it relies on the availability of the IB or OOB tuner to select and output a single channel to Kamieniecki's monitor, and those tuners are not available if they are being utilized by the user. As for the OOB channels, Kamieniecki could potentially monitor the OOB channels while the set-top box is in use. Ex. 2014, 123:19-22. Thus, Kamieniecki theoretically could be monitoring a very limited frequency range of the spectrum (*e.g.* 60 MHz) while the user is watching television. This optimistically assumes that the OOB tuner can be repurposed without complicating management of the set-top box; while the OOB tuner is making a measurement the set-top will not be able to receive control messages. As for the IB channels, if Kamieniecki did not wait for idle, Kamieniecki's set-top box would interrupt the user's viewing experience because, instead of outputting an IB channel for viewing on the user's TV, the selected IB channel would go to the monitor. This interruption of service would contradict Kamieniecki's goal of avoiding interrupting service. Ex. 1009, ¶ [0017]. I understand that Mr. Lett agrees with this understanding of Kamieniecki. Ex. 1002, ¶ 159; *also id.*, Ex. 2014, 123:19-22.

114. Even though Kamieniecki has the theoretical ability to monitor multiple channels at the same time by utilizing the IB tuner for user viewing and the OOB

tuner for monitoring of OOB channels, Kamieniecki specifically discloses waiting for the set-top box to be entirely idle before monitoring. Moreover, using the OOB tuner to monitor the OOB channels would potentially cause issues with receiving authorizations for premium content, which are communicated via the OOB channels. Therefore, permitting Kamieniecki to monitor while the set-top box is not idle would go against Kamieniecki's approach to gathering signal quality information, and if the OOB tuner is used to monitor, it could also interrupt the provisioning of certain channels (e.g., premium channels), which would annoy the subscriber.

115. From my review of the Mr. Lett's declaration, I understand he is taking the position that "a POSITA would have recognized that Kamieniecki's measurements can be made without waiting for an idle time, and can be done in parallel so as to not disturb users." Ex. 1002, ¶ 159. I disagree with this opinion because simply having the ability to select multiple channels does not automatically mean that Kamieniecki would no longer wait for idle.

116. For example, Renken (Ex. 1011) discloses a system having multiple receivers arranged in parallel, yet Renken still waits for resources to be idle before monitoring a received signal. *See* Ex. 1011, 4:45-50; *also* Ex. 1002, ¶ 96 ("Renken describes that the MCCM 100 may receive a request, from a central measurement controller (CMC) 7, to perform measurements using one or more idle receivers, and the MCCM 100 may send its measurement results back to the CMC 7."). Renken

specifically discloses, "[g]enerally, the present invention relates to [cable modems (CMs)] that incorporate at least two receivers and at least two transmitters." Ex. 1011, 6:62-64. Therefore, despite having the ability to also process at least two channels at the same time via the two receivers, Renken discloses waiting for resources to be idle. Therefore, I disagree that simply because of parallel channel processing, a POSITA would modify Kamieniecki to no longer wait for idle.

2. Fundamental Alterations to Konstantinos

117. The proposed combination would also require fundamental changes to Konstantinos's architecture. Konstantinos discloses for N number of channel selectors that there would be N number of decoders, thus a 1:1 ratio between channel selectors and decoders. *See, e.g.*, Ex. 1010, ¶ [0046]. Because of this 1:1 ratio, a POSITA would need to change the architecture of Konstantinos so that an output of the multi-channel receiver goes to Kamieniecki's monitor and not to a decoder. Because Mr. Lett and the Petition fail to address this, it is not clear how the combination is capable of the claimed concurrent output. I can think of only two modifications to Konstantinos that would allow for a channel selector to output to Kamieniecki's monitor: (1) remove a channel decoder and replace it with Kamieniecki's monitor (N-1 number of decoders); or (2) add an additional channel selector that provides a selected channel to the Kamieniecki's monitor (N+1 number

of channel selectors). A POSITA would not be motivated to make either modification.

118. To the extent that the Petition and Mr. Lett argue that a POSITA would remove a channel decoder (i.e., N-1 number of decoders), a POSITA would not be motivated to make this change as removing a decoder would reduce the number of channels available to the user. For example, if the multi-channel receiver of Konstantinos had only four channel selectors in order to comply with DOCSIS 3.0, removing a channel selector would potentially render the device non-compliant. The number of channel decoders is dictated by the requirements of the cable operator purchasing the set-top box. For example, a DVR set-top box might be required to record four programs simultaneously, requiring four channel decoders. A cable operator is not motivated to allow one channel decoder to be repurposed at odd times – it would thwart the requirement of recording programming as ordered by the subscriber.

119. To the extent that the Petition and Mr. Lett argue that a POSITA would add a channel selector (i.e., N+1 number of channel selectors), this would increase the cost of the set-top box, and there is no reason in the references or in the art that would suggest a POSITA to make such an addition. Again, as discussed above, the development and design of STBs was extremely price sensitive and there would be little motivation to add additional hardware. Additionally, there is no suggestion or

motivation that a POSITA would be interested in adding extra logic gates and signal output pins for a channel selector dedicated only to signal monitoring. This would be a waste of integrated-circuit area and signal pins, each of which would drive up the cost of the integrated circuit. And each of the references (Kamieniecki, Konstantinos, and even Renken) each disclose the same number of channel selectors (or tuners) as decoders, demonstrating that there was no suggestion or teaching in the prior art to modify the number of decoders to be any different than the same as the number of channel selectors (or tuners). Therefore, a POSITA would not be motivated to include additional hardware in the form of an additional channel selector that is not required by any standard or demanded by the customer, that would increase the price, and that had no suggestion in the prior art to do so.

3. The Proposed Combination Renders Kamieniecki Unfit For Its Intended Purpose

120. Finally, it is my opinion that the proposed combination would hinder Kamieniecki's ability to report information to the headend by removing the OOB tuner, which is yet another reason a POSITA would not be motivated to make the suggested combination. In its Institution Decision, the Board found "no evidence in those paragraphs that replacing Kamieniecki's *tuners* of the *receiver* used to receive the *downstream* signal would have any effect on *transmitters* and other components of the receiver generating the *upstream* signal." Paper 8, 24-25 (emphasis in

original). I disagree because removing the OOB tuner would have a significant effect on the disclosed transmitter and thus Kamieniecki's ability to transmit information. As described in the subsequent paragraphs, Kamieniecki's reporting mechanism depends on receiving prompts from the headend via the OOB tuner. Therefore, removing the OOB tuner removes the ability to receive and process these prompts thereby effectively rendering Kamieniecki's reporting mechanism inoperable.

121. As an initial matter, Kamieniecki's approach to reporting information aligns with SCTE 55-1. Kamieniecki discloses that it reports signal quality information to the headend when (1) the STB is polled by the headend or (2) as the information is collected. Ex. 1009, ¶ [0014]. This is the same as 55-1, which utilizes a polling method or the "aloha" method. *Supra*, ¶ 59. This alignment between Kamieniecki and SCTE 55-1 makes sense because the original assignee of Kamieniecki—General Instruments—developed the SCTE 55-1 standard. *Supra*, ¶ 80. A POSITA reading Kamieniecki would thus understand that it implements the SCTE 55-1 standard for upstream reporting.

122. SCTE 55-1 relies on prompts received via OOB channels to facilitate use of the return path. As described above, in a polling method of reporting, a set-top box sends information to the headend in response to a request (i.e., a poll) from the headend received via the OOB channel. Ex. 1026, pp. 416-17. Thus, without the OOB tuner, the set-top box would be unable to receive and process the poll from the

headend. For the aloha method, the set-top box transmits information to the headend without being prompted and awaits an acknowledgment from the headend. Ex. 1026, pp. 417. If the set-top box does not receive an acknowledgment from the headend, the set-top will continue to resend the information. Ex. 1026, p. 417. If the set-top box fails to receive an acknowledgment after a certain number of transmissions, the set-top box will stop reporting. Thus, under either the polling or the aloha method, the set-top box will eventually stop reporting because it cannot receive or process information being sent via the OOB channels without the OOB tuner. In other words, the OOB receiver is necessary for the transmitter to work correctly.

123. To the extent Petitioner argues that Kamieniecki uses SCTE 55-2 instead of SCTE 55-1, those are the only two options, after all, removing the OOB tuner would also render this reporting mechanism inoperable. As described above, SCTE 55-2 assigns each set-top box a specific time when it is able to transmit information to the headend. *Supra*, ¶ 60. For the set-top box to know when to transmit, it must receive via the OOB channel a "SL-ESF START" message. *Id*. Thus, by removing the OOB tuner, the set-top box would be unable to determine its timeslot. If the set-top box were to report outside its timeslot, it would interfere with other set-top box transmissions, eventually causing the headend to drop messages. Thus, without the OOB tuner, the proposed combination would effectively be unable to report information to the headend unless Konstantinos's multi-channel receiver

was redesigned to process an OOB channel. Mr. Lett and the Petition fail provide any reason to modify Konstantinos's multi-channel receiver in this way, let alone discuss that a POSITA would be motivated to do so or how a POSITA would do so. Therefore, it is my opinion that removing the OOB tuner would render Kamieniecki's set-top box inoperable for its intended purpose.

X. GROUNDS A-D DO NOT DISCLOSE WHERE THE PRIOR ART DISCLOSES OR RENDERS OBVIOUS CERTAIN CLAIM ELEMENTS

A. The Proposed Combination Fails to Render Obvious "analyzing said selected first portion of said digitized signal to measure a characteristic of said received signal"

124. It is my opinion that the Petition fails to demonstrate that its proposed combination discloses "analyzing said selected first portion of said digitized signal to measure a characteristic of said received signal." Ex. 1001, cl. [1G]. For this element, the Petition relies only on the monitor of Kamieniecki, arguing that Kamieniecki's "monitor 116 would receive one or more *digital* output streams for analysis from Konstantinos' receiver 200." Petition, 38 (emphasis added). It is my opinion that Kamieniecki's monitor analyzes an analog signal, and therefore, the Petition has failed to identify where the prior art discloses analyzing a digitized signal.

125. Kamieniecki discloses that "A basic set-top box (STB) includes a single, in-band (IB), tuner. The in-band tuner receives, e. g., MPEG-2 transport

streams. … Such a basic set-top box can receive analog or digital transmissions, on in-band (IB) channels, but cannot use the cable return path." Ex. 1009, ¶ [0004].

126. As described above, all of the signals on a coaxial cable are fundamentally analog signals. *Supra*, ¶ 55. Thus, digital cable is a bit of misnomer, in that, there is no such thing as a digital carrier signal. A carrier signal is always an analog signal for coaxial cable transmissions that always exists in the analog domain while it is traveling through the coaxial cable. That is because coaxial cables and cable television rely on frequency division multiplexing of separate signals, necessitating the use of analog carriers and analog transmission techniques such as Quadrature Amplitude Modulation (QAM).

127. Given this, a POSITA would understand Kamieniecki's reference to digital transmissions is discussing the fact that information (e.g., video or data)—regardless of whether it is in an analog or a digital format—can be modulated onto an analog carrier signal for transmission from the headend to the customer's premises. There simply is no such thing as a digital carrier signal in the art of Kamieniecki or the '826 Patent. This is the same understanding of digital transmissions that Mr. Lett provided at his deposition. Ex. 2014, 57:3-13 ("Q. You mean digital information modulated onto an analog signal, right? A. Of course. Q. But the signal itself, the carrier signal received by the set-top box is analog, you agree? A. Yes.")

128. Next, these analog carrier signals are received by the IB and OOB tuners. Ex. 1009, ¶ [0014]. The tuner then selects a single 6-MHz analog signal (or, in the case of OOB, a single 1.8-MHz/1-2MHz analog signal) and passes it on for further processing. At his deposition, Mr. Lett discussed a distinction between "analog" and "digital" tuners. Ex. 2014, 68:3-9. I understand that Mr. Lett went on to provide examples of analog and digital tuners. Ex. 2014, 104:14-19, 105:5-8.

129. The first example Mr. Lett provided is a tuner that outputs 1's and 0's. Under this example, Mr. Lett appears to be asserting that the IB and OOB tuners would also include the decoder, which is responsible for extracting the digital content (i.e., the 1's and 0's) from the analog carrier signal. Stated differently, only the decoder can meaningfully process the 1's and 0's. Thus, in the first example, the tuner still selects and outputs an analog carrier signal, it just would output the selected channel to the decoder to extract the 1's and 0's. To the extent Mr. Lett is opining that the digital content would be output to Kamieniecki's monitor, this would not be the "digitized signal" recited in the challenged claims because the plain language of the state that the digitized signal is a result of digitizing the received signal (i.e., the analog carrier signal from the headend), not the digital content carried thereon.

130. The second example is "a tuner that receives a signal and has circuitry that performs digital signal processing." Ex. 2014, 105:5-8. When asked to clarify,

Mr. Lett stated this digital tuner "could be a tuner that is meant to tune analog channels and uses digital circuitry for processing those analog channels. And has a D[igital]-to-A[nalog] converter that converts it back to analog on the output." Ex. 2014, 103:1-5. Based on this example, this "digital" tuner would still select a portion of an analog channel and once selected would digitize this signal, perform signal processing in the digital domain, and then converter it back to analog. Ultimately, Kamieniecki's single tuners—both IB and OOB—output an analog signal.

131. Because of this, it is my opinion that Kamieniecki's signal monitor is designed to gather signal quality of an analog signal, not a digitized signal.

XI. GROUNDS E-F

A. Overview of U.S. Patent 8,649,421 (Renken)

132. Renken discloses measurement-capable cable modems (MCCMs) for use in a cable network that seeks to leverage receivers 21 that are not processing data ("idle receivers") in the MCCMs to perform network measurements and then send those measurements to a central point (e.g., a central measurement controller (CMC)). Ex. 1011, 8:35-40, 11:6-18. At this central point, information received from the MCCMs is processed and compared to detect errors in the network. *See* Ex. 1011, 22:22-39.

133. Renken uses a downstream receiver circuit 20 as shown in Figure 3 below to both process and generate the data necessary to measure the digitized signal.

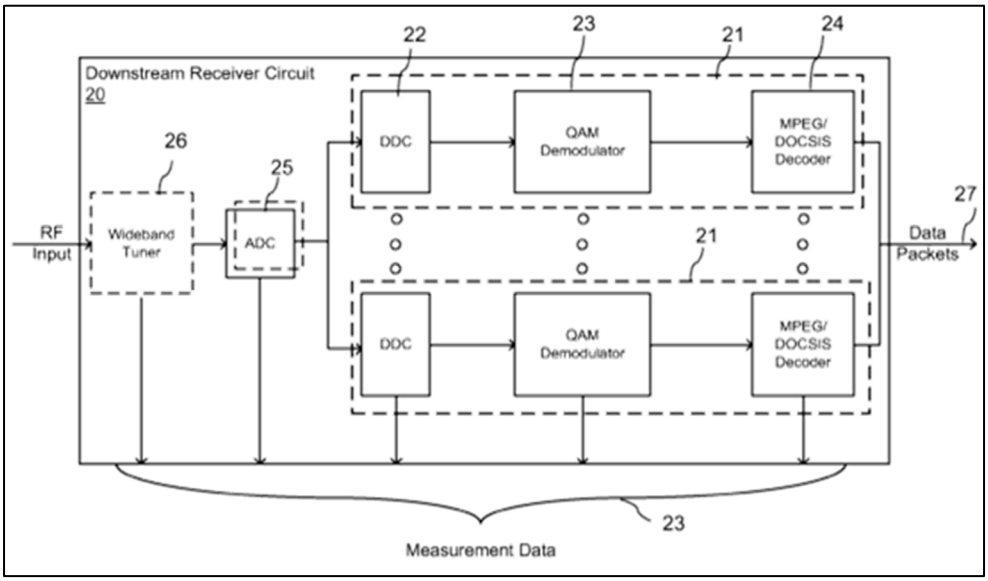

Ex. 1011, Fig. 3. This downstream receiver circuit 20 outputs to processor 50, which is a component of controller 200, as shown in Figure 2:

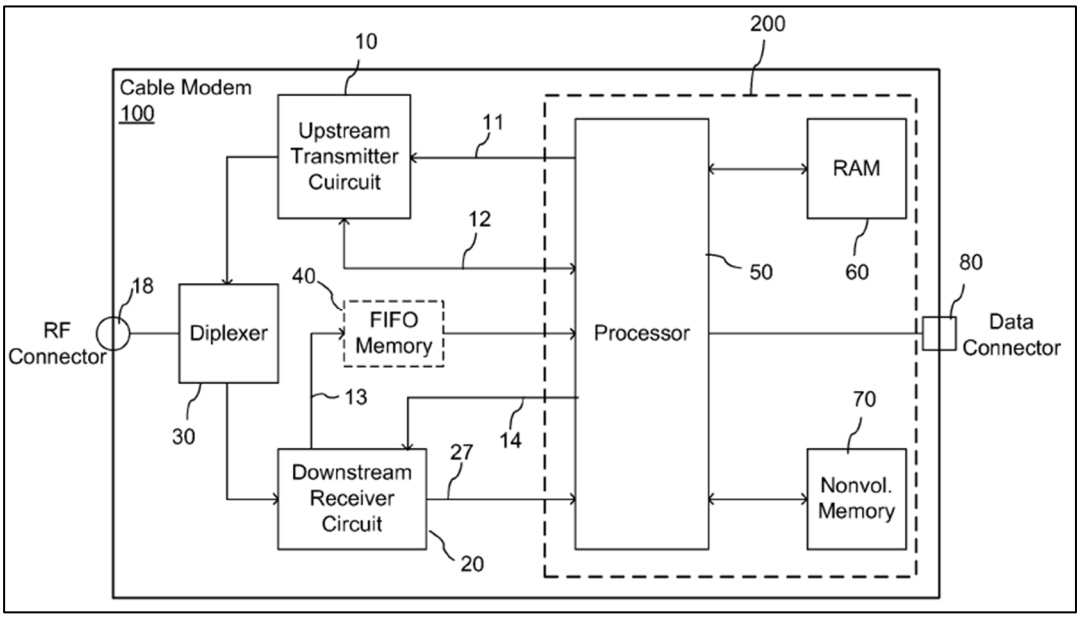

Ex. 1011, Fig. 2 (displaying downstream receiver circuit 20 communicating demodulated downstream data 27 to processor 50).

B. Renken Fails to Render Obvious the "Controlling the Transmission of Network Management Messages" Element

134. I understand that Mr. Lett opines that it would be obvious that "error reports or alarms" generated by the CMC could instead be generated by the MCCMs. Ex. 1002, ¶ 278 ("Renken also discloses the CMC analyzing measurement results and generating error reports or alarms if measurement results fall outside of acceptable limits, and a POSITA would have considered it obvious for the MCCM to do the same using the error threshold that it receives as part of its measurement plan."). I disagree that a POSITA would find this obvious because this is not what Renken discloses and it would not be an obvious modification.

135. Renken discloses that the CMC is a measurement controller that collects, evaluates, and stores measurement results from multiple MCCMs for the purpose of remotely performing automated end-of-line diagnostics. Ex. 1011, 8:35-50. The CMC is further divided into subcomponents, among which, is the subcomponent responsible for generating error reports or alarms— the "data analysis and processing module" ("DAAP"). Ex. 1011, 22:22-39. The DAAP supports end-of-line diagnostics by coordinating, comparing, processing, and analyzing measurement results from multiple MCCMs. Ex. 1011, 22:22-23. For example, the

DAAP "may also look for abnormally high or low signals at an individual MCCM 100 compared to all other MCCMs in the system or to pre-defined thresholds or limits." Ex. 1011, 22:32-34. If the DAAP determines a measurement is outside parameters established by the network operator, it generates an error report or alarm. Ex. 1011, 22:36-39.

136. Thus, if a POSITA had the MCCM generate an error report or alarm, Renken's CMC would be incapable of performing any functions that required a collection and comparison of raw measurement data. For example, as mentioned in the preceding paragraph, the CMC, via the DAAP, looks for high and low signals compared to other MCCMs. Thus, if the MCCMs only send error reports or alarms to the CMC, the CMC would lack the raw signal level measurements needed to make such a comparison.

137. Moreover, the proposed modification would hinder network service providers from understanding the source of network impairments affecting a group of customers. Renken itself discusses a range of impairments that could affect the performance of the network. Ex. 1011, 2:40-3:3. One impairment that would be difficult to identify without raw measurement data is ingress from radio waves. Renken discloses that ingress of radio frequency carriers from shortwave radio, citizen's band radio, or other broadcast sources may cause interference peaks at specific carrier frequencies in the communication path. Ex. 1011, 2:61-65. Thus, if

error reports or alarms are reported instead of signal level measurements across a range of frequencies, it would be difficult for a network operator to identify radio frequency ingress as the source of the impairment.

138. I also understand that Mr. Lett identified Renken's disclosure of "error thresholds" as further support for his opinions concerning the claimed network management messages. Ex. 1002, ¶ 277 ("Renken describes that the MCCM's measurement plan could include error thresholds, and it would have been obvious to a POSITA that the MCCM would use those thresholds to detect, based on an underlying measurement, that an error has occurred in a channel, and to send a message to the CMC indicating the error.") (citing Ex. 1011, 22:67-23:4). After reviewing the cited portion of Renken, I disagree that this discloses sending an error report or anything other than the measured characteristic to the CMC.

139. The cited portion of Renken states: "By way of example, the measurement plan may include one or more of the following: measurement identifiers for each measurement to be performed, a channel plan specifying channels to be tested, intervals at which the measurements are to be repeated, and error thresholds." Ex. 1011, 22:67-23:4. From this, Renken's disclosure of "error thresholds" relates to the "measurement plan." According to Renken, the measurement plan is what Renken's network uses to identify when an idle receiver/transmitter should perform a requested measurement and report the results.

Ex. 1011, 23:5-9, 18:7-11; *see also id.*, 18:46-52, 20:36-41. Thus, I understand that if the error threshold is exceeded, the MCCM would identify and utilize an idle receiver/transmitter to measure and report whatever is requested in accordance with the measurement plan.

140. Finally, it is my opinion that there would be no motivation to have the MCCMs transmit error reports or alarms based on exceeding an error threshold because this would contradict Renken's centralized model for network monitoring. As described above, Renken discloses that the role of the CMC and the DAAP is to monitor the network using measurements from MCCMs located throughout the network. Because MCCMs report to a centralized location, it is my opinion that Renken discloses a centralized method of networking monitoring. If the proposed modification of Renken was made, network errors would be identified at the edge of the network—i.e., at an MCCM. Because these MCCMs are distributed throughout the network, this would be more a distributed model of network monitoring and would be antithetical to Renken's centralized model.

XII. CONCLUSION

All of the statements made in this declaration of my own knowledge are true. All statements made based on information and belief are believed to be true. I declare under penalty of perjury that the foregoing is true and correct.

Dated: December 6, 2024 By: _____

Samuel H. Russ

APPENDIX A

Curriculum Vitae of Dr. Samuel H. Russ

Education

Ph.D. in Electrical Engineering, Georgia Institute of Technology, 1991.

Thesis Title: *An Information-Theoretic Approach to Analysis of Computer Architectures and Compression of Instruction Memory Usage*

Thesis Advisor: Dr. Cecil O. Alford

Bachelor's of Electrical Engineering (with Highest Honor), Georgia Institute of Technology, 1986.

Employment

University of South Alabama **2007 – Present**

Interim Chair, Department of Electrical and Computer Engineering (2015-2016)

Associate Professor, Department of Electrical and Computer Engineering (2011-present)

Assistant Professor, Department of Electrical and Computer Engineering

Developing new class in signal integrity, developing cross-disciplinary collaborative research efforts, updating labs and class materials, teaching both undergraduate and graduate classes.

Scientific-Atlanta (Later Cisco, Now Technicolor) **2000 - 2007**

Manager, Advanced Technologies R&D, Explored major new technologies including home networking and multi-room video distribution; oversaw construction of prototypes and demonstrations; demonstrated technologies at trade shows and to stock analysts; managed group of approximately 10 designing set-top boxes for the cable television industry including all phases of high-volume electronic design including layout, high-speed digital design, emissions considerations, gate array conversion, and designing with custom ASICs; supervised cross-functional team to increase hard drive reliability; wrote numerous patent applications. Products deployed widely, including Time Warner Cable and Cablevision.

IVI Checkmate (Now Ingenico) **1999 – 2000**

Matrix Manager, Electrical Engineering, Supervised staff of approximately 6 electrical engineers, oversaw assignments, allocated time across multiple projects, worked to coordinate project schedules with priorities, assisted in sales and other customer communications.

Staff Electrical Engineer, Oversaw major design overhaul of touch-pad payment system including embedded-systems design, power-system design, and system layout and schematic capture. System deployed widely at Wal-Mart, Home Depot, and others.

Mississippi State University **1994 - 1999**

Thrust Leader, Computing Systems Research Thrust and Systems Integration Group, NSF Engineering Research Center -- Coordinate research plans and NSF reporting for 6 faculty and 3 full-time staff, assist in development of strategic plans and pursuit of funding opportunities, oversight of development of the ERC-wide integrated testbed. Managed multi-year research project in distributed computing that included 11 students and 5 faculty.

Assistant Professor, Department of Electrical & Computer Engineering -- Developed all-new graduate class in circuit board design, authored textbook chapter, developing new undergraduate lab, pioneered teaching classes over 2-way interactive video.

Dickerson Vision Technologies (Now Cognex) 1992 - 1994

Director of Manufacturing--Oversaw the development and implementation of a manufacturing plan for the company.

Senior Applications Engineer--Developed firmware and user-interface software for the company's proprietary hardware, Assisted in development of machine vision system hardware, Assisted in sales duties.

Georgia Institute of Technology 1987 - 1991

Graduate Research Assistant--Helped design five VLSI chips while developing two custom CPU's, Silicon-compiler-based computer chip design, including initial design, full functional simulation, size and timing optimization, and manufacturing test development.

Publications

Books

1. Samuel H. Russ, *Signal Integrity: Applied Electromagnetics and Professional Practice*, Springer, 2016. (Textbook)
2. Samuel H. Russ, *Signal Integrity: Applied Electromagnetics and Professional Practice*, Second Edition, Springer, 2022. (Textbook)

Book Chapters

1. Samuel H. Russ, "High-Speed Digital Effects", Chapter 10 of John Kraus and Daniel Fleisch, *Electromagnetics with Applications, Fifth Edition*, McGraw-Hill, 1998. (Textbook)
2. Samuel Russ, Bret Webb, Jonathan Holifield and Justin Walker (2011). "PILS: Low-Cost Water-Level Monitoring, Environmental Monitoring", Dr. E.O. Ekundayo, Ph.D., (Ed.), pp. 137-156, ISBN: 978-953-307-724-6, InTech, (Peer-reviewed)

Journal and Magazine Articles

1. Samuel Russ, "The Threat of Malicious Circuit-Board Alteration: Attack Taxonomy and Examples," *Electronic Device Failure Analysis*, Vol. 23, Issue 3, August 2021, pp. 13-22.
2. Mink DM, McDonald J, Bagui S, Glisson WB, Shropshire J, Benton R, Russ S. Near-Real-Time IDS for the U.S. FAA's NextGen ADS-B. Big Data and Cognitive Computing. 2021; 5(2):27. https://doi.org/10.3390/bdcc5020027
3. S. H. Russ and J. Gatlin, "Ways to hack a printed circuit board: PCB production is an underappreciated vulnerability in the global supply chain," *IEEE Spectrum*, vol. 57, no. 9, pp. 38-43, Sept. 2020.
4. Samuel H. Russ, Cade C. Cashen, Thomas Thomas, and Roma Hanks, "Smart Grid Architecture for Unobtrusive Home Health Monitoring," *National Social Science Journal*, Vol. 44, No. 1, 2015, pp. 62-68.
5. Samuel H. Russ, Tho D. Ha, and Jonathan H. Shapiro, "Simulation-based Optimization of Wear Leveling for Solid-State Disk Digital Video Recording," *IEEE Transactions on Consumer Electronics*, Vol. 60, No. 3, Nov. 2014, pp. 363-367.
6. Samuel H. Russ and Salim Alsharif, "Packet Loss Behavior of HomePlug AV Traffic at Video Bit Rates", *IEEE Transactions on Consumer Electronics*, Vol. 57, No. 2, May 2011, pp. 823-826.
7. Samuel H. Russ and Ramesh Nallur, "Digital Video Recording onto Solid-State Disks: Feasibility and Lifetime Estimation", *IEEE Transactions on Consumer Electronics*, Vol. 57, No. 2, May 2011, pp. 558-563.
8. Samuel H. Russ and Sasan Haghani, "802.11g Packet-Loss Behavior at High Sustained Bit Rates

in the Home", *IEEE Transactions on Consumer Electronics*, Vol. 55, No. 2, May 2009, pp. 788-791.

9. Samuel H. Russ, and Ramesh Nallur, "A Framework for Calculating Fundamental DVR Performance Limits", *IEEE Transactions on Consumer Electronics*, Vol. 55, No. 1, Feb. 2009, pp. 132-138.
10. Ioana Banicescu, Sheikh Ghafoor, Vijay Velusamy, Samuel H. Russ, Mark Bilderback, "Experiences from integrating algorithmic and systemic load balancing strategies", *Concurrency and Computation: Practice and Experience*, Volume 13, Number 2, pp. 121-139 (2001).
11. Roger L. King, Samuel H. Russ, Aric B. Lambert, Donna S. Reese, "An artificial immune system model for intelligent agents", *Future Generation Computer Systems*, Volume 17 , Issue 4, pp. 335 - 343 (January 2001).
12. Dr. Samuel H. Russ, Jonathan Robinson, Matt Gleeson, Brad Meyers, and Chun-Heong Tan, "Using Hector to Run MPI Programs over Networked Workstations", *Concurrency - Practice and Experience,* Vol. 11, No. 4, pp. 189-204 (1999).
13. Russ, S.H. Reece, K. Robinson, J. Meyers, B. Rajan, D. Rajagopalan, L. Chun-Heong Tan, "Hector: an agent based architecture for dynamic resource management", *IEEE Concurrency*, Vol. 7, No. 2, pp. 47-55, Apr-Jun 1999.
14. Dr. Samuel H. Russ, Jonathan Robinson, Dr. Brian K. Flachs, and Bjorn Heckel, "The Hector Distributed Run-Time Environment", *IEEE Transactions on Parallel and Distributed Systems*, Vol. 9, No. 11, pp. 1102-1114 (1998).
15. S.H. Russ and C.O. Alford, "Coupled Noise and Its Effects on Modern Packaging Technology", *IEEE Transactions on Components, Hybrids, and Manufacturing Technology*, Volume 13, Number 4, December 1990, pp. 1074-1082.

U.S. Patents

1. U.S. Patent Number 6,748,080, "Apparatus for entitling remote client devices", Samuel Russ, Michael Gaul, Anthony Wasilewski, and Howard Pinder, June 8, 2004.
2. U.S. Patent Number 7,181,010, "Apparatus for entitling remote client devices", Samuel Russ, Michael Gaul, Anthony Wasilewski, and Howard Pinder, February 20, 2007.
3. U.S. Patent Number 7,360,233, "Broadcast carousel system access for remote home communication terminal", Samuel Russ, Michael Gaul, and Anthony Wasilewski, April 15, 2008.
4. U.S. Patent Number 7,360,235, "Systems and methods for operating a peripheral record/playback device in a networked multimedia system", David Davies, Samuel Russ, and Irvan Krantzler, April 15, 2008.
5. U.S. Patent Number 7,499,822, "Analog set-top calibration patterns in manufacturing", Leo Montreuil, Wayne B. Williams, Samuel H. Russ, and Robert Kriete, March 3, 2009
6. U.S. Patent Number 7,505,592, "Apparatus for entitling and transmitting service instances to remote client devices", Samuel H. Russ, Michael Gaul, Anthony Wasilewski, and Howard Pinder, March 17, 2009
7. U.S. Patent Number 7,516,470, "Locally-updated interactive program guide", Samuel H. Russ and Michael Gaul, April 7, 2009
8. U.S. Patent Number 7,826,711, "Digital Video Disc (DVD) Player or Digital Video Recorder (DVR) Playback with Memory", Samuel H. Russ, Nov. 2, 2010.
9. U.S. Patent Number 7,849,486, "Networked subscriber television distribution", Samuel H. Russ, David Lett, Jonathan Robinson, and Michael Gaul, Dec. 7, 2010.
10. U.S. Patent Number 7,860,250, "Apparatus for entitling and transmitting service instances to remote client devices", Samuel H. Russ, Michael Gaul, Anthony Wasilewski, and Howard Pinder, Dec. 28, 2010.
11. U.S. Patent Number 7,861,272, "Networked subscriber television distribution", Samuel H. Russ, David Lett, Jonathan Robinson, and Michael Gaul, Dec. 28, 2010.

12. U.S. Patent Number 7,870,584, “Interactive program guide with selectable updating”, Samuel H. Russ and Michael Gaul, Jan. 11, 2011.
13. U.S. Patent Number 7,876,998, “DVD playback over multi-room by copying to HDD”, William Wall and Samuel H. Russ, Jan. 25, 2011.
14. U.S. Patent Number 7,908,625, “Networked multimedia system”, Neil C. Robertson, David B. Lett, Samuel H. Russ, Bohdan S. Prus, Michael A. Gaul, and Ajith N. Nair, March 15, 2011.
15. U.S. Patent Number 7,937,737, “Field qualification of disk drives in consumer electronics devices”, Samuel H. Russ and Mark R. Murray, May 3, 2011.
16. U.S. Patent Number 7,961,780, “Generated set top calibration patterns in manufacturing”, Leo Montreuil, Wayne B. Williams, Samuel H. Russ, and Robert Kriete, Jun. 14, 2011.
17. U.S. Patent Number 7,978,720, “Digital media device having media content transfer capability”, Samuel H. Russ, Christopher L. Stallings, July 12, 2011.
18. U.S. Patent Number 8,046,806, “Multiroom point of deployment module”, William E. Wall, Samuel H. Russ, Oct. 25, 2011.
19. U.S. Patent Number 8,127,236, “Proximity detection using wireless connectivity in a communications system”, Paul J. Claussen, Ajith N. Nair, and Samuel H. Russ, Feb. 28, 2012.
20. U.S. Patent Number 8,181,205, “PVR Channel and PVR IPG Information”, Samuel H. Russ, Michael A. Gaul, and Dariusz S. Kaminski, May 15, 2012.
21. U.S. Patent Number 8,208,796, “Systems and methods for prioritizing the storage location of media data”, Bohdan Prus and Samuel H. Russ, June 26, 2012.
22. U.S. Patent Number 8,280,229, “DVD playback over multi-room by copying to HDD”, William E. Wall and Samuel H. Russ, October 2, 2012.
23. U.S. Patent Number 8,295,338, “Generated set top calibration patterns in manufacturing”, Leo Montreuil, Wayne B. Williams, Samuel H. Russ, and Robert A. Kriete, October 23, 2012
24. U.S. Patent Number 8,364,015, “Stretch and zoom bar for displaying information”, Samuel H. Russ and Gary Hibbard, January 29, 2013.
25. U.S. Patent Number 8,549,567, “Media content sharing over a home network”, Samuel H. Russ, David B. Lett, Jonathan Robinson, Michael A. Gaul, October 1, 2013.
26. U.S. Patent Number 8,627,385, “Systems and methods for operating a peripheral record playback device in a networked multimedia system”, David B. Davies, Samuel H. Russ, Irvan J. Krantzler, January 7, 2014.
27. U.S. Patent Number 8,966,550, “Home communication systems,” David B. Davies, Samuel H. Russ, Irvan J. Krantzler, February 24, 2015.
28. U.S. Patent Number 9,762,970, “Access of stored video from peer devices in a local network,” David B. Davies, Samuel H. Russ, and Irvan J. Krantzler, September 12, 2017.
29. U.S. Patent Number 10,412,439, “PVR Channel and PVR IPG Information”, Samuel H. Russ, Michael A. Gaul, and Dariusz S. Kaminski, Sep. 10, 2019.

European Patents

1. European Patent Number EP1543680B1, “Locally-updated interactive program guide”, Samuel Russ and Michael Gaul, Feb. 17, 2010.
2. European Patent Number EP1673937B1, “Proximity detection using wireless connectivity in a communications system”, Paul Claussen, Ajith Nair, and Samuel Russ, April 21, 2010.
3. European Patent Number EP1604523B1, “Method for determining the encryption of a service content depending on the fidelity of the reformatting of said content”, Samuel Russ, Michael Gaul, Anthony Wasilewski, and Howard Pinder, Nov. 21, 2012.
4. European Patent Number EP1552699B1, “Networked multimedia system”, Neil Robertson, David Lett, Samuel Russ, Bohdan Prus, Michael Gaul, and Ajith Nair, Dec. 18, 2013.
5. European Patent Number EP1334617B1, “Networked Subscriber Television Distribution”, Samuel Russ, David Lett, Jonathan Robinson, and Michael Gaul, April 1, 2015.

6. European Patent Number EP1920601B1, “Multiroom Point of Deployment Module,” William Wall and Samuel Russ, May 4, 2016.
7. European Patent Number EP1510033B1, “Apparatus for Entitling Remote Client Devices,” Samuel H. Russ, Michael Gaul, Anthony Wasilewski, and Howard Pinder, Aprl 26, 2017.
8. European Patent Number EP1540946B1, “Broadcast Carousel System Access for Remote Home Communications Terminal via a Gateway Device,” Samuel Russ, Michael Gaul, and Anthony Wasilewski, April 18, 2018.
9. European Patent Number EP2008280B1, “Method and Device for Prioritizing the Storage Location of Media Data,” Bohdan Prus and Samuel Russ, September 26, 2018.

Patents Applied For

Approximately 20 additional U.S. patent applications have been submitted and are in review.

Conference Papers

1. J. Todd McDonald, Rebecca C. Clark, Lee M. Hively, and Samuel H. Russ. 2022. “Phase space power analysis for PC-based rootkit detection.” In *Proceedings of the 2022 ACM Southeast Conference (ACM SE '22)*. Association for Computing Machinery, New York, NY, USA, 82–90. https://doi.org/10.1145/3476883.3520212
2. S. H. Russ, " Surreptitiously Adding a Microcontroller to a Printed Circuit Board," 2021 IEEE Physical Assurance and Inspection of Electronics (PAINE), Washington, DC, USA, 2021.
3. S.H. Russ, “Circuit Board Security Vulnerabilities and Counteractions”, IPC APEX EXPO 2021.
4. S. H. Russ, "Techniques to Thwart Surreptitiously Altered PCBs," 2020 IEEE Physical Assurance and Inspection of Electronics (PAINE), Washington, DC, USA, 2020, pp. 1-4.
5. S. H. Russ, E. Spencer, T. Scroggins, and S. Latif, “Power-Efficient Software Architecture for a CubeSat System”, *2020 SoutheastCon*, Raleigh, NC, USA, 2020, pp. 1-6.
6. A. Russ, S. H. Russ, E. Spencer and M. Frank, "Motor Controller and Reaction Wheel for CubeSat," *2019 SoutheastCon*, Huntsville, AL, USA, 2019, pp. 1-3.
7. F. Lorenzo, J. T. McDonald, T. R. Andel, W. B. Glisson and S. Russ, "Evaluating Side Channel Resilience in iPhone 5c Unlock Scenarios," *2019 SoutheastCon*, Huntsville, AL, USA, 2019, pp. 1-7
8. E. Spencer, D. Clark, S. Russ, *et al*., "First results from a time domain impedance probe for measuring plasma properties in the ionosphere," 2017 IEEE 60th International Midwest Symposium on Circuits and Systems (MWSCAS), Boston, MA, 2017, pp. 1284-1287.
9. E. Spencer, D. Clark, R. Gollapalli, S. Russ and B. Kerrigan, "A System On Chip design for fast time domain impedance spectroscopy," 2017 IEEE 60th International Midwest Symposium on Circuits and Systems (MWSCAS), Boston, MA, 2017, pp. 124-127.
10. Ramya Manikyam, J. Todd McDonald, William R. Mahoney, Todd R. Andel, and Samuel H. Russ, “Comparing the effectiveness of commercial obfuscators against MATE attacks,” *Proceedings of the 6th Workshop on Software Security, Protection, and Reverse Engineering (SSPREW '16)*, 2016, Article 8. DOI: https://doi.org/10.1145/3015135.3015143
11. Samuel Russ, Tho Ha, and Jonathan Shapiro, “Simulation of Digital Video Recording to Maximize Solid-State Disk Lifetime,” *Proceedings of the 2014 International Conference on Consumer Electronics*, Jan. 10-13, 2014, pp. 562-563.
12. Thomas Thomas, Cade Cashen, and Samuel Russ, “Leveraging Smart Grid Technology for Home Health Care”, *Proceedings of the 2013 International Conference on Consumer Electronics*, Jan. 11-14, 2013, pp. 276-277.
13. Cade Cashen, Samuel Russ, and Thomas Thomas, “Using a Wireless LAN to Perform Motion Detection”, *Proceedings of the 2013 International Conference on Consumer Electronics*, Jan. 11-14, 2013, pp. 63-64.
14. Nicklaus Thomas, David Evans, and Samuel Russ, “A Markovian Algorithm for Creating Immersive Public-Speaking Audiences”, *Proceedings of the 2013 International Conference on*

Consumer Electronics, Jan. 11-14, 2013, pp. 384-385.

15. Samuel H. Russ, "Podcasting to Improve Software Usage", *Proceedings of the 2012 ASEE Southeastern Section Conference,* April 1-3 2012, Starkville, MS, Paper ID 605.
16. Samuel H. Russ, "Using Student ID Numbers to Create Customized Homework Problems", *Proceedings of the 2012 ASEE Southeastern Section Conference,* April 1-3 2012, Starkville, MS, Paper ID 606.
17. Samuel H. Russ and Ramesh Nallur, "Digital Video Recording Onto Solid-State Disks", *2011 Digest of Technical Papers, 2011 International Conference on Consumer Electronics*, pp. 495-496. (2nd place in best paper contest, 2011.)
18. Mohammad Mushtaq, Samuel H. Russ, and Mohammad S. Alam, "Variable FEC to Reduce ECC Overhead in Digital Video Transmission", *2011 Digest of Technical Papers, 2011 International Conference on Consumer Electronics*, pp. 215-216.
19. Samuel H. Russ and Salim Alsharif, "Behavior of HomePlug AV Traffic At High Sustained Bit Rates in the Home", *2011 Digest of Technical Papers, 2011 International Conference on Consumer Electronics*, pp. 682-683.
20. Samuel H. Russ, Viswakalyan Perepa, Silas Leavesly, and Bret Webb, "Novel Low-Cost Salinity Sensor for Embedded Environmental Monitoring", *Proceedings of IEEE Southeastcon 2010*, March 18-21, 2010, pp. 53-56.
21. Samuel H. Russ and Kung-Hsien Chen, "Thermally Conductive Circuit Boards", *Proceedings of the 59th Electronic Components and Technology Conference (ECTC 2009),* May 2009, pp. 465-468.
22. Samuel H. Russ and Sasan Haghani, "Behavior of 802.11g Traffic at High Sustained Bit Rates in the Home", *2009 Digest of Technical Papers, 2009 International Conference on Consumer Electronics, Jan. 2009*, pp. 423-424.
23. Samuel H. Russ, and Ramesh Nallur, "A Framework for Calculating Fundamental DVR Performance Limits", *2009 Digest of Technical Papers, 2009 International Conference on Consumer Electronics, Jan. 2009*, pp. 51-52.
24. Samuel H. Russ, "Home Networking: Extending Cable's Reach", *The Complete Technical Paper Proceedings from NCTA*, 2001, pp. 160-165.
25. Samuel H. Russ, Rashid Jean-Baptiste, Tangirala Shailendra Krishna Kumar, and Marion G. Harmon, "Transparent Real-Time Monitoring in MPI", *IPPS/SPDP Workshops 1999,* in *Parallel and Distributed Processing*, Lecture Notes in Computer Science, vol. 1586, Springer-Verlag, 1999, pp. 1327-1334.
26. Roger L. King, Aric B. Lambert, Samuel H. Russ, and Donna S. Reese, "The Biological Basis of the Immune System as a Model for Intelligent Agents", *IPPS/SPDP Workshops 1999,* in *Parallel and Distributed Processing*, Lecture Notes in Computer Science, vol. 1586, Springer-Verlag, 1999, pp. 156-164.
27. Aric Lambert, Roger King, Sam Russ, and Donna Reese, "Intelligent Control Agents for Resource Management of Heterogeneous Parallel Computing", Computational Intelligence for Modeling, Control, and Automation (CIMCA 98) in Concurrent Systems Series, vol. 55, IOS Press, 1999, pp. 116-121.
28. Samuel H. Russ and Adam Gaither, "Developing An Integrated Environment for Computational Field Simulation", *Object-Oriented Methods for Inter-Operable Scientific and Engineering Computing: Proceedings of the 1998 SIAM Workshop*, pp. 50-57.
29. Samuel H. Russ, Ioana Banicescu, Sheikh Ghafoor, Bharathi Janapareddi, Jonathan Robinson, and Rong Lu, "Hectiling: An Integration of Fine and Coarse-Grained Load-Balancing Strategies", *Proceedings of the Seventh International Symposium on High Performance Distributed Computing*, August 1998, IEEE Computer Society, pp. 106-113.
30. Samuel H. Russ, "An Architecture for Rapid Distributed Fault Tolerance", 3rd International Workshop on Embedded High-Performance Computing, in J. Rolim, Editor, *Parallel and*

Distributed Processing, Lecture Notes in Computer Science, vol. 1388, Springer-Verlag, 1998, pp. 925-930.

31. Dr. Samuel H. Russ, Brad Meyers, Jonathan Robinson, Matt Gleeson, Laxman Rajagopalan, Chun-Heong Tan, and Bjørn Heckel, "User-Transparent Run-Time Performance Optimization", *Proceedings of the 2nd International Workshop on Embedded HPC Systems and Applications*, Geneva, April 1997.
32. J. Robinson, S.H. Russ, B. Flachs, and B. Heckel, "A Task Migration Implementation of the Message-Passing Interface", *Proceedings of the 5th High Performance Distributed Computing Conference* (HPDC-5), August 1996, IEEE Computer Society, pp. 61-68.
33. S.H. Russ, B. Flachs, J. Robinson, and B. Heckel, "Hector: Automated Task Allocation for MPI", *Proceedings of the 10th International Parallel Processing Symposium*, April, 1996, IEEE Computer Society, pp. 344-348.
34. W.S. Tan, C.O. Alford, and S.H. Russ, "GT-EP: A Novel High-Performance Real-Time Architecture", *Proceedings of the 18th International Symposium on Computer Architecture*, May 1991, pp. 12-21.

Reports

1. Aric B. Lambert, Roger L. King, Samuel H. Russ, Donna S. Reese, "Adaptive Analysis for the Design of Hardware Agents Using the Artificial Immune System Model for Resource Management of Heterogeneous Systems", Miss. State Technical Report No. MSSU-COE-ERC-98-10, Aug. 1998.
2. Daniel H. Linder, Robert B. Reese, Jon Robinson, and Samuel H. Russ, "JavaCADD: A Java-based Server and GUI for Providing Distributed ECAD Services", Mississippi State University Technical Report No. MSSU-COE-ERC-98-07, May 1998.
3. Samuel H. Russ, "Using Hector in an Architecture for Rapid Distributed Fault Tolerance", Mississippi State Technical Report No. MSSU-EIRS-ERC-97-17, December 1997.
4. Samuel H. Russ, Jonathan Robinson, Matt Gleeson, and Jose Figueroa, "Dynamic Communication Mechanism Switching in Hector", Mississippi State Technical Report No. MSSU-EIRS-ERC-97-8, September 1997.
5. Samuel H. Russ, Brian Flachs, Jonathan Robinson, and Bjorn Heckel, "Hector: Automated Task Allocation for MPI", Mississippi State Technical Report No. MSSU-EIRS-ERC-95-6, September, 1995.

Funded Grants and Contracts

University of South Alabama

1. National Space Grant Foundation, Aug. 2018-May 2019, "Automation Infrastructure for Gateway Biological Laboratory," PI, $28,062.
2. Nfina (Local Mobile Company), March 2018 – March 2019, "Redhawk", PI, $119,881.
3. NASA, May 2016 – Present, "Spatially Resolved Measurements Of Plasma Density Irregularities In The Ionosphere F Region For Scintillation Studies", Co-I, $100,000.
4. Marine Environmental Science Consortium (GRI), Jan. 2011-Dec. 2011, "Conductivity Based In-Situ Hydrocarbon Sensor", PI, $9,338.
5. University of South Alabama Research Council (USARC), Feb. 2008 – Feb. 2009, "Instrumentation of Hurricane Forecast Models for Performance Optimization", $5,000 for one year.

Mississippi State University

1. National Science Foundation, April 1998-March 1999, "An ERC-CREST Partnership in Distributed and Computational Systems", PI, $100,000/year, renewable for 5 years.

2. Office of Naval Research, Nov. 1996-Nov. 1998, `"Distributed Visualization and Virtual Environments for Oceanography and Meteorology", Co-PI, $200,000.

3. U.S. Army Waterways Experiment Station, July 1996-July 1999, `"Efficient Parallel Wave Modeling", PI, $200,000, Funded under CHSSI (Common HPC Scalable Software Initiative) of the DoD. ($50,000 actually funded.)

4. NSF Engineering Research Center for Computational Field Simulation, April 1995- May 1999, "Heterogeneous Computing Testbed (CA 8)", PI, By year: $34,983/$70,111/$55,916. Funded through NSF Engineering Research Center.

Dickerson Vision Technology

1. Small Business Innovations Research Program of the NSF, Division of Industrial Interface, September 1993 - February 1994, Award No. III-9260914. ($50,000 Phase I contract conducted at Dickerson Vision Technologies.)

Technology Transfer and Licensing

Hector Distributed Run-Time Environment licensed by MPI Software Technology, Inc., Starkville, MS in June 1998 (while at Mississippi State University)

Students Advised (Major Professor)

Level	At USA	At MSU
Ph.D.	--	0
Masters	3	9

Courses Created and Enhanced

University of South Alabama

EE 264 Microprocessor Systems and Interfacing – Replaced 68HC11 with Freescale 9S12 architecture and redesigned the entire course, Introduced use of 68HC11 simulator and accompanying podcast to enhance student's ability to visualize microprocessor operation

EE 268 Digital Logic Design Lab – Updated one lab experiment

EE 368 Microprocessor Systems Lab – Developed all-new sequence to tie EE 368 to senior projects with hands-on experiments like motors, photocells, and servomotors.

EE 401 Introduction to ECE Design – Completely overhauled the first-semester senior project course. Added lectures on professionalism, career development, and legal aspects of engineering. Structured the course so that reports would lead up to their senior-project reports.

EE 404 ECE Design – Completely overhauled the second-semester senior project course by requiring better projects and adding material on giving effective presentations. Obtained very enthusiastic response from the department's Industrial Advisory Board.

EE 446 – Obtained donation of boards from Freescale and redesigned all of the experiments to develop more interesting demonstrations and to switch from assembly language to C.

EE 457/557 – Developing series of podcasts to augment in-class lectures with materials related to embedded systems and professional development.

EE 469/569 Advanced Digital System Design – Developed all-new course in high-speed circuit board design from an electromagnetics perspective, and authored a textbook for the course. Added a lab experience in 2009.

EE 560 Advanced Computer Architecture – Selected new textbook for the class and developed lecture materials to match

EG 101 – Developed systematic curriculum shared by all sections including "checklists" for instructors, handouts, and lecture materials. Introduced motors project, which has become the most popular EG 101 project.

Mississippi State University

EE 8993 High Speed Digital Design -- Offered on video nationwide, it features pioneering treatment of high-speed circuit board design from an electromagnetics perspective. Material from the class has been included in one of the best-known electromagnetics textbooks, and it continues to be one of the most popular graduate classes in the department.

EE 4743 Computer Aided Digital Design -- Added breakthrough educational technology to permit remote access to logic synthesis capabilities. Offered on live two-way video starting Fall 1998.

Courses Taught

University of South Alabama

EE 220, Circuit Analysis I, 1 course.
EE 263, Digital Logic Design, 2 courses.
EE 264, Microprocessor Sys-Interfacing, 4 courses.
EE 268, Digital Logic Design Lab, 1 course.
EE 368, Microprocessor Sys Interf Lab, 14 courses.
EE 401, Intro Elec and CpE Design - W, 7 courses.
EE 404, Elec and Comp Eng Designs-W, 7 courses.
EE 440, HDL Logic Synthesis, 1 course.
EE 446, Embedded System Design Lab, 2 courses.
EE 457, Embedded System Design, 10 courses.
EE 469, Signal Integrity, 5 courses.
EE 534, VLSI Design Systems, 1 course.
EE 540, HDL Logic Synthesis, 1 course.
EE 548, Computer-Network Security, 5 courses.
EE 557, Adv. Embedded System Design, 8 courses.
EE 560, Adv Computer Architecture, 3 courses.
EE 569, Signal Integrity, 5 courses.
EG 101, Intro to Engineering & Design, 5 courses.
EG 231, Intro to Ethics and Economics, 2 courses.

Mississippi State University

Number	Description	Class Description
EE 2111	Electrical Lab I	Accompanies introductory digital class
EE 2713	Digital Devices	Introductory digital class
EE 4723	Microcomputers II	Microcontroller interfacing
EE 4743	Computer Aided Digital Design	VHDL, logic design, and synthesis
EE 8993	High-Speed Digital Design	Signal integrity and high-speed design

Honors and Awards

University of South Alabama College of Engineering "Teacher of the Year" 2015

Mobile Area Council on Engineering "Engineering Educator of the Year" 2015

Technology and Engineering Emmy® Award, 2012, for "Pioneering Development of Multi-Room DVR." Awarded to Cisco. I managed the groups that built the first prototypes, gave public demonstrations, wrote numerous patent applications, and developed the first mass-production set-top containing Multi-Room DVR.

2nd Place in "Best Paper – Storage Category" at ICCE 2011. The paper is "Digital Video Recording Onto Solid-State Disks" as noted in Conference publications above.

Attendee, "Top Prof" Banquet – University of South Alabama chapter of Mortar Board, 2009,2010

Tau Beta Pi Engineering Professor of the Year – University of South Alabama chapter of Tau Beta Pi, 2008. One of two highest awards in the College of Engineering for teaching, and the only award voted on by honor students in the College.

Finalist, 53rd International Science and Engineering Fair, 1983, Albuquerque, NM.

Professional Activities

Expert Witness Engagements

Case	Jurisdiction and Case Number	Year(s)	Witness for	Expert Reports	Dep.	Trial	IPR* Rep.
WNE Holdings v. Rockwell Automat.	Southern District of Alabama	2011	Plaintiff	1	0	0	0
Personalized Media Corp. (PMC) v. Echostar	Eastern District of Texas	2010-2015	Plaintiff	2	3	0	0
Pegasus v. DirecTV et al.	Delaware	2011-13	Plaintiff	1	0	0	0
Apple v. Samsung	Int'l Trade Commission 337-TA-796	2012	Respondent	4	1	1	0
EON v. MobiTV et al.	Delaware	2013	Defendant	1	1	0	0
PMC v. Zynga	Eastern District of Texas	2013	Plaintiff	1	5	0	4
OpenTV v. Netflix	Delaware	2014	Defendant	0	0	0	0
Kaplan v. OnForce	N.D. California	2014	Defendant	0	0	0	1
Intellectual Ventures v. J.P. Morgan Chase	Southern District of New York	2013-2019	Defendant	2	2	0	0
PMC v. Amazon	Delaware	2014-2015	Plaintiff	1	9	0	5
Better Mouse Corp. v. Steelseries et al.	Eastern District of Texas	2015-2016	Plaintiff	2	0	1	0
SyncPoint v. Nintendo et al.	Eastern District of Texas	2015	Plaintiff	2	1	0	0
TQ Beta v. Dish	USPTO (IPR)	2016	Defendant	1	1	0	0
Script v. ADT et al.	Eastern District of Texas	2016	Plaintiff	2	2	0	0
Sony v. Pace	USPTO (IPR)	2016	Defendant	0	1	0	4
PMC v. Apple	EDTX and USPTO (IPR)	2016-Now	Patent Owner	2	1	1	2
PMC v. Samsung	Eastern District of Texas	2016	Patent Owner	2	0	0	0
Music Choice v. Stingray	Eastern District of Texas	2016-now	Plaintiff	2	2	0	4

Case	Jurisdiction and Case Number	Year(s)	Witness for	Expert Reports	Dep.	Trial	IPR* Rep.
Broadcom v. AMD	USPTO (IPR)	2016	Petitioner	0	0	0	1
Tech Pharmacy v. Alixa et al.	Eastern District of Texas	2017	Plaintiff	2	2	1	0
Rovi v. PMC	Eastern District of Texas, Arbitration	2017	Defendant	0	1	0	0
Implicit v. Trend Micro	Eastern District of Texas	2017	Defendant	2	1	0	0
Implicit v. Palo Alto	Eastern District of Texas	2018	Defendant	1	1	0	0
Invensas v. Samsung	Eastern District of Texas	2018	Plaintiff	2	1	0	0
Selective Signals v. Palo Alto	USPTO (IPR)	2018-Now	Petitioner	0	1	0	1
Rovi Tivo v. Various	Canada	2018-Now	Plaintiff	0	0	0	0
Implicit v. Netscout	Eastern District of Texas	2018-Now	Defendant	0	0	0	0
Rovi Tivo v. Comcast	USPTO (IPR)	2019-2020	Plainitff	0	4	0	5
Rovi Tivo v. Comcast	ITC	2019-2020	Petitioner	2	1	1	0
American Patents v. Various	Eastern District of Texas	2019-Now	Plaintiff	0	0	0	0
BBiTV v. OpenTV	California	2019	Defendant	0	0	0	0
Roku v UEI	USPTO (IPR)	2019-Now	Petitioner	0	6	0	8
MV3 v Roku	Western District of Texas	2019-2020	Defendant	2	2	1	0
BBiTV v Dish	USPTO (IPR)	2019-Now	Petitioner	0	3	0	6
PMC v Google	Eastern District of Texas	2020	Plaintiff	1	1	0	0
PMC v Netflix	Southern District of New York	2020-Now	Plaintiff	2	0	0	0
UEI v Roku *et al.*	ITC	2020-2021	Respondent	1	1	1	0
BBiTV v Dish	Western District of Texas	2020-2021	Defendant	1	5	0	6
Flexiworld v Amazon *et al.*	Western District of Texas	2020-Now	Defendant	0	0	0	0
Flexiworld v Roku	Western District of Texas	2021-2022	Defendant	0	0	0	0
Roku v UEI *et al.*	ITC	2021-2022	Complain.	1	0	0	0
Roku v DivX	USPTO (IPR)	2021-Now	Petitioner	0	0	0	1
Apple v Identity	USPTO (IPR)	2022	Patent	0	0	0	2

Case	Jurisdiction and Case Number	Year(s)	Witness for	Expert Reports	Dep.	Trial	IPR* Rep.
			Owner				
Audi v Aprese	USPTO (IPR)	2022-Now	Petitioner	0	0	0	2
paSafeShare	Re-Exam	2021	Patent Owner	0	0	0	3

* Includes reports submitted for IPRs, CBMRs, and Re-Exams

Invited Lectures

"Real-time Monitoring in MPI", Florida A&M University, Tallahassee, FL, August 1998

Consulting

Consulted with various investment firms concerning telecommunications market, 2007 – ongoing
Cox Communications – DVR Reliability – 2015

Society Memberships

Institute of Electrical and Electronic Engineers (Senior Member), IEEE Consumer Electronics Society, IEEE Computer Society, Eta Kappa Nu, Tau Beta Pi, Phi Kappa Phi, Gamma Beta Phi
Secretary, Northeast Mississippi Subsection of the IEEE, 1994-95

Article Reviewer

Computers and Electrical Engineering, Supercomputing '94, IEE *Transactions*, *Concurrency: Practice and Experience,* International Parallel Processing Symposium, *IEEE Transactions on Education, IEEE Transactions on Parallel and Distributed Systems, ICT 2012, ICAEE 2012*

Proposal Reviewer

Army Research Office, National Science Foundation, U.S. Department of Energy

University Service

Chair, Search Committee, ECE Department – Search for Assistant Professor positions, 2008-now (chair since 2011)
Member, ECE Department Undergraduate Affairs Committee, 2015-now
Member, College of Engineering Academic Standards Committee, 2016-now
Member, Search Committee, College of Engineering – Search for 2 Associate Dean positions, 2015
Member, Search Committee, College of Engineering – Search for Associate Dean positions, 2008-09
Member, University of South Alabama Council on International Education, 2008-15
Chairman, ECE Department "Open House" Committee, 2008-09
Conducted open house and other demonstrations for the department, 2008-now
Chairman, ECE Department Recruiting and Retention Committee, 2007-08
Updated and conducted experiment for ACE program, 2007
Member, Hearin Undergraduate Committee, 1998
Department Coordinator, United Way Campaign, 1995
Award Referee, 1995 Instructional Paper Award, MSU College of Engineering