US008919654B2

(12) **United States Patent**
**Wang et al.**

(10) **Patent No.: US 8,919,654 B2**
(45) **Date of Patent: *Dec. 30, 2014**

(54) **ENCODED INFORMATION READING TERMINAL WITH USER-CONFIGURABLE MULTI-PROTOCOL WIRELESS COMMUNICATION INTERFACE**

(71) Applicant: **Hand Held Products, Inc.**, Fort Mill, SC (US)

(72) Inventors: **Ynjiun P. Wang**, Cupertino, CA (US); **Huyu Qu**, San Jose, CA (US); **James T. Sauerwein**, Charlotte, NC (US)

(73) Assignee: **Hand Held Products, Inc.**, Fort Mill, SC (US)

( * ) Notice: Subject to any disclaimer, the term of this patent is extended or adjusted under 35 U.S.C. 154(b) by 0 days.

This patent is subject to a terminal disclaimer.

(21) Appl. No.: **14/199,120**

(22) Filed: **Mar. 6, 2014**

(65) **Prior Publication Data**

US 2014/0187181 A1 Jul. 3, 2014

**Related U.S. Application Data**

(60) Continuation of application No. 13/430,121, filed on Mar. 26, 2012, now Pat. No. 8,708,236, which is a division of application No. 12/567,158, filed on Sep. 25, 2009, now Pat. No. 8,141,784.

(51) **Int. Cl.**
***G06K 7/10*** (2006.01)

(52) **U.S. Cl.**
USPC ..... **235/462.45**; 235/472.01; 235/462.44

(58) **Field of Classification Search**
USPC ..... 235/462.44, 462.45, 462.46, 462.25, 235/472.01, 472.02, 472.03
See application file for complete search history.

(56) **References Cited**

U.S. PATENT DOCUMENTS

| | | | |
|---|---|---|---|
| 4,774,715 | A | 9/1988 | Messenger |
| 4,825,058 | A | 4/1989 | Poland |
| 4,868,375 | A | 9/1989 | Blanford |
| 5,101,406 | A | 3/1992 | Messenger |
| 5,256,865 | A | 10/1993 | Wike, Jr. et al. |
| 5,347,113 | A | 9/1994 | Reddersen et al. |

(Continued)

FOREIGN PATENT DOCUMENTS

| | | | |
|---|---|---|---|
| EP | 2061285 | A2 | 5/2009 |
| WO | WO 98/14023 | A1 | 4/1998 |

OTHER PUBLICATIONS

B.P. Otis, Y.H. Chee, R. Lu, N.M. Pletcher, J.M. Rabaey, "An Ultra-Low Power MEMS-Based Two-Channel Transceiver for Wireless Sensor Networks."

(Continued)

*Primary Examiner* — Karl D Frech
(74) *Attorney, Agent, or Firm* — Oliff PLC

(57) **ABSTRACT**

An apparatus may include a microprocessor and a wireless communication interface configured to perform at least one of receiving a first radio signal or transmitting a second radio signal. The microprocessor may be configured to execute at least one of a base-band encoder software program or a base-band decoder software program. The apparatus may be further configured to execute a wireless communication protocol selector software program that may be configured to optimize a value of a user-defined criterion in order to dynamically select at least one of a wireless communication network, a wireless communication protocol, and a parameter of a wireless communication protocol.

**20 Claims, 9 Drawing Sheets**

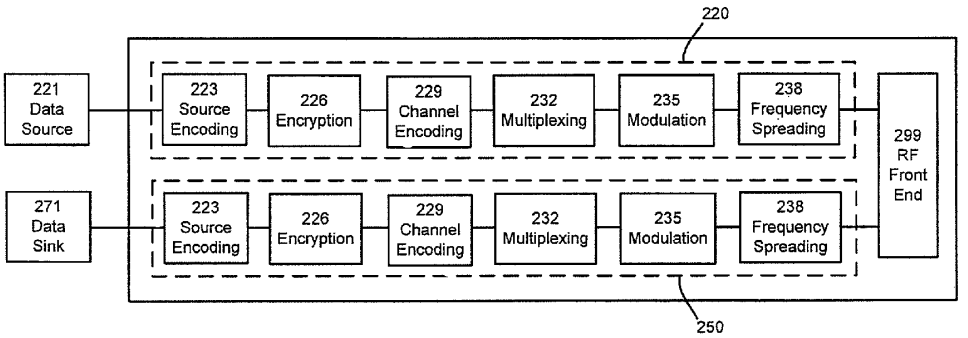


TransCore LP
Exhibit 1001

(56) **References Cited**

U.S. PATENT DOCUMENTS

5,510,606 A 4/1996 Worthington et al.
5,579,341 A 11/1996 Smith et al.
5,610,595 A 3/1997 Garrabrant et al.
5,793,903 A 8/1998 Lopreseti et al.
5,802,179 A 9/1998 Yamamoto
5,812,605 A 9/1998 Smith et al.
5,815,811 A 9/1998 Pinard et al.
5,903,825 A 5/1999 Goode et al.
5,973,681 A 10/1999 Tanigawa et al.
6,167,099 A 12/2000 Rader et al.
6,345,764 B1 2/2002 Knowles
6,384,744 B1 5/2002 Philyaw et al.
6,751,470 B1 6/2004 Ella et al.
6,823,388 B1 11/2004 Philyaw et al.
6,908,034 B2 6/2005 Alleshouse
6,911,945 B2 6/2005 Korva
6,937,196 B2 8/2005 Korva
6,961,544 B1 11/2005 Hagstrom
7,072,690 B2 7/2006 Shin et al.
7,159,214 B2 1/2007 Rajaram et al.
7,161,357 B2 1/2007 Lee et al.
7,190,728 B2 3/2007 Kawada et al.
7,202,776 B2 4/2007 Breed
7,202,819 B2 4/2007 Hatch
7,218,678 B2 5/2007 Katta et al.
7,251,499 B2 7/2007 Ella et al.
7,265,731 B2 9/2007 Vance et al.
7,283,094 B2 10/2007 Lee
7,307,331 B2 12/2007 Kipnis et al.
7,333,067 B2 2/2008 Hung et al.
7,367,514 B2 5/2008 Soule, III et al.
7,368,311 B2 5/2008 Tilmans et al.
7,423,599 B2 9/2008 Li et al.
7,446,717 B2 11/2008 Hung et al.
7,466,274 B2 12/2008 Lin et al.
7,586,387 B2 9/2009 Van Delden
7,592,957 B2 9/2009 Achour et al.
7,617,342 B2 11/2009 Rofougaran
7,696,929 B2 4/2010 Kaneda
7,741,965 B2 6/2010 Lai et al.
7,750,435 B2 7/2010 Rofougaran
7,764,232 B2 7/2010 Achour et al.
7,795,700 B2 9/2010 Rofougaran
7,809,329 B2 10/2010 Rofougaran
7,835,157 B2 11/2010 Tilmans et al.
7,839,216 B2 11/2010 Alidio et al.
7,839,236 B2 11/2010 Dupuy et al.
7,847,739 B2 12/2010 Achour et al.
7,855,696 B2 12/2010 Gummalla et al.
7,874,483 B2 1/2011 Wang et al.
7,885,600 B2 2/2011 Rofougaran
7,893,790 B2 2/2011 Van Delden
7,899,394 B2 3/2011 Rofougaran
7,903,724 B2 3/2011 Rofougaran
7,907,597 B2 3/2011 Lee et al.
7,908,420 B2 3/2011 Rofougaran
7,917,129 B2 3/2011 Souisse et al.
8,141,784 B2 * 3/2012 Wang et al. ..... 235/462.25
8,165,070 B2 4/2012 Salminen
8,185,152 B1 5/2012 Goldner
8,190,156 B2 5/2012 Rantanen et al.
8,214,536 B2 7/2012 Zhao
8,223,717 B2 7/2012 Dillon et al.
8,238,905 B2 8/2012 Jiang
8,250,207 B2 8/2012 Raleigh
8,254,337 B2 8/2012 Zhong et al.
8,596,533 B2 12/2013 Qu et al.
2002/0055368 A1 5/2002 Lee
2002/0066788 A1 6/2002 Knowles
2002/0183013 A1 12/2002 Auckland et al.
2004/0249915 A1 12/2004 Russell
2005/0128152 A1 6/2005 Milosavljevic
2005/0156796 A1 7/2005 Nysen
2005/0271133 A1 12/2005 Waxman
2006/0025102 A1 2/2006 Kipnis et al.
2006/0070089 A1 3/2006 Shoaib et al.
2006/0128332 A1 6/2006 Van Rooyen et al.
2006/0135084 A1 6/2006 Lee
2006/0261821 A1 11/2006 Lee et al.
2006/0261938 A1 11/2006 Lai et al.
2006/0279446 A1 12/2006 Wang et al.
2007/0015058 A1 1/2007 Takezawa et al.
2007/0060089 A1 3/2007 Owen et al.
2007/0152058 A1 7/2007 Yeakley et al.
2007/0257847 A1 11/2007 Su et al.
2008/0042847 A1 2/2008 Hollister et al.
2008/0048917 A1 2/2008 Achour et al.
2008/0076383 A1 3/2008 Barrett et al.
2008/0107213 A1 5/2008 Gupta et al.
2008/0150807 A1 6/2008 Lin et al.
2008/0150829 A1 6/2008 Lin et al.
2008/0157897 A1 7/2008 Tilmans et al.
2008/0181186 A1 7/2008 Rofougaran
2008/0181287 A1 7/2008 Rofougaran
2008/0182613 A1 7/2008 Rofougaran
2008/0203167 A1 8/2008 Soule et al.
2008/0237341 A1 10/2008 Fleck et al.
2008/0258981 A1 10/2008 Achour et al.
2008/0258993 A1 10/2008 Gummalla et al.
2008/0297404 A1 12/2008 Lin et al.
2009/0006677 A1 1/2009 Rofougaran
2009/0024550 A1 1/2009 Wynn et al.
2009/0028082 A1 1/2009 Wynn et al.
2009/0032592 A1 2/2009 Christensen
2009/0033359 A1 2/2009 Rofougaran
2009/0036067 A1 2/2009 Rofougaran
2009/0037627 A1 2/2009 Rofougaran
2009/0058734 A1 3/2009 Ali et al.
2009/0067388 A1 3/2009 Van Rooyen et al.
2009/0073065 A1 3/2009 Jordan
2009/0074106 A1 3/2009 See et al.
2009/0115549 A1 5/2009 Lee
2009/0121951 A1 5/2009 Kaneda
2009/0128446 A1 5/2009 Gummalla et al.
2009/0135087 A1 5/2009 Gummalla et al.
2009/0148074 A1 6/2009 Xu et al.
2009/0160575 A1 6/2009 Dupuy et al.
2009/0160578 A1 6/2009 Achour
2009/0167457 A1 7/2009 Melde et al.
2009/0180403 A1 7/2009 Tudosoui
2009/0218657 A1 9/2009 Rofougaran
2009/0219213 A1 9/2009 Lee et al.
2009/0227205 A1 9/2009 Rofougaran
2009/0245146 A1 10/2009 Gummalla et al.
2009/0251385 A1 10/2009 Xu et al.
2009/0285135 A1 11/2009 Rousu et al.
2009/0289737 A1 11/2009 Itoh et al.
2009/0295473 A1 12/2009 Dupuy et al.
2009/0295483 A1 12/2009 Alidio et al.
2009/0295660 A1 12/2009 Xu et al.
2009/0316612 A1 12/2009 Poilasne et al.
2009/0322490 A1 12/2009 Kung et al.
2009/0323783 A1 12/2009 Buris et al.
2010/0022195 A1 1/2010 Rofougaran
2010/0045554 A1 2/2010 Xu et al.
2010/0060544 A1 3/2010 Penev et al.
2010/0073254 A1 3/2010 Lee et al.
2010/0077115 A1 3/2010 Rofougaran
2010/0079347 A1 4/2010 Hayes et al.
2010/0109805 A2 5/2010 Achour
2010/0109971 A2 5/2010 Gummalla et al.
2010/0109972 A2 5/2010 Xu et al.
2010/0110943 A2 5/2010 Gummalla et al.
2010/0117908 A2 5/2010 Lee et al.
2010/0123635 A1 5/2010 Lopez et al.
2010/0127085 A1 5/2010 Yamagajo et al.
2010/0157858 A1 6/2010 Lee et al.
2010/0171563 A1 7/2010 Dupuy et al.
2010/0176880 A2 7/2010 Dupuy et al.
2010/0207703 A1 8/2010 Dupuy et al.
2010/0225554 A1 9/2010 Huang et al.
2010/0231464 A1 9/2010 Huang et al.
2010/0231470 A1 9/2010 Lee et al.
2010/0232474 A1 9/2010 Rofougaran et al.

(56) **References Cited**

U.S. PATENT DOCUMENTS

| | | | |
|---|---|---|---|
| 2010/0238075 | A1 | 9/2010 | Pourseyed |
| 2010/0238081 | A1 | 9/2010 | Achour et al. |
| 2010/0276498 | A1 | 11/2010 | Rofougaran |
| 2010/0283692 | A1 | 11/2010 | Achour et al. |
| 2010/0283705 | A1 | 11/2010 | Achour et al. |
| 2010/0285634 | A1 | 11/2010 | Rofougaran |
| 2010/0291924 | A1 | 11/2010 | Antrim et al. |
| 2011/0026624 | A1 | 2/2011 | Gummalla et al. |
| 2011/0039501 | A1 | 2/2011 | Achour et al. |
| 2011/0047603 | A1 | 2/2011 | Gordon et al. |
| 2011/0050364 | A1 | 3/2011 | Achour |
| 2011/0066774 | A1 | 3/2011 | Rofougaran |
| 2011/0068873 | A1 | 3/2011 | Alidio et al. |
| 2011/0095950 | A1 | 4/2011 | Yu |
| 2011/0095964 | A1 | 4/2011 | Pathak et al. |
| 2011/0109402 | A1 | 5/2011 | Dupuy et al. |
| 2011/0116424 | A1 | 5/2011 | Sauerwein, Jr. et al. |
| 2011/0136457 | A1 | 6/2011 | Yu |
| 2011/0148586 | A1 | 6/2011 | Anderson et al. |
| 2011/0153349 | A1 | 6/2011 | Anderson et al. |
| 2011/0174877 | A1 | 7/2011 | Fleck et al. |
| 2011/0176528 | A1 | 7/2011 | Lu et al. |
| 2011/0191484 | A1 | 8/2011 | Babbar et al. |
| 2011/0206002 | A1 | 8/2011 | Jeon et al. |
| 2011/0306386 | A1 | 12/2011 | Centoza et al. |
| 2011/0319072 | A1 | 12/2011 | Ekici et al. |
| 2012/0003976 | A1 | 1/2012 | Bhat et al. |
| 2012/0047269 | A1 | 2/2012 | Leonov et al. |
| 2012/0058752 | A1 | 3/2012 | Souissi et al. |
| 2012/0089845 | A1 | 4/2012 | Raleigh |
| 2012/0100823 | A1 | 4/2012 | Chen et al. |
| 2012/0134291 | A1 | 5/2012 | Raleigh |
| 2012/0165056 | A1 | 6/2012 | Kim et al. |
| 2012/0196579 | A1 | 8/2012 | Souissi et al. |
| 2012/0196644 | A1 | 8/2012 | Scherser et al. |
| 2012/0197792 | A1 | 8/2012 | Raleigh |
| 2012/0203677 | A1 | 8/2012 | Raleigh |
| 2012/0207134 | A1 | 8/2012 | Karaoguz et al. |
| 2012/0210391 | A1 | 8/2012 | Raleigh |
| 2012/0224694 | A1 | 9/2012 | Lu et al. |
| 2013/0043980 | A1 | 2/2013 | Havens et al. |
| 2013/0043981 | A1 | 2/2013 | Wang et al. |

OTHER PUBLICATIONS

C.T.-C. Nguyen, "Vibrating RF MEMS for Low Power Communications (invited)," Proceedings, 2002 MRS Fall Meeting, Boston, Massachusetts, Dec. 2-6, 2002, pp. J12.1.1-J2-1.12.

Feb. 21, 2011 Communication Extended Search Report in European Patent Application No. 10191449.1.

Feb. 1, 2011 Partial European Search Report in European Patent Application No. 10176444.7.

Hawaii International Conference on IEEE, Piscataway, New Jersey, Dynamic Dispatching and Transport Optimization—Real-World Experience with Perspectives on Pervasive Technology Integration, Jan. 5, 2009.

S. Lee and C.T. -C. Nguyen, "Influence of Automatic Level Control on Micromechanical Resonator Oscillator Phase Noise," Proceedings, 2003 IEEE Int. Frequency Control Symposium, Tampa Florida, May 5-8, 2003, pp. 341-349.

Dec. 7, 2010 Notice of Amendment in Chinese Application No. 201010544113.X.

www.nano.gatech.edu/news/release.php, Georgia Institute of Technology: Nanoscience and Nanotechnology, "Researchers Win $3.5 Million to Improve Wireless," Website, Aug. 5, 2010.

* cited by examiner

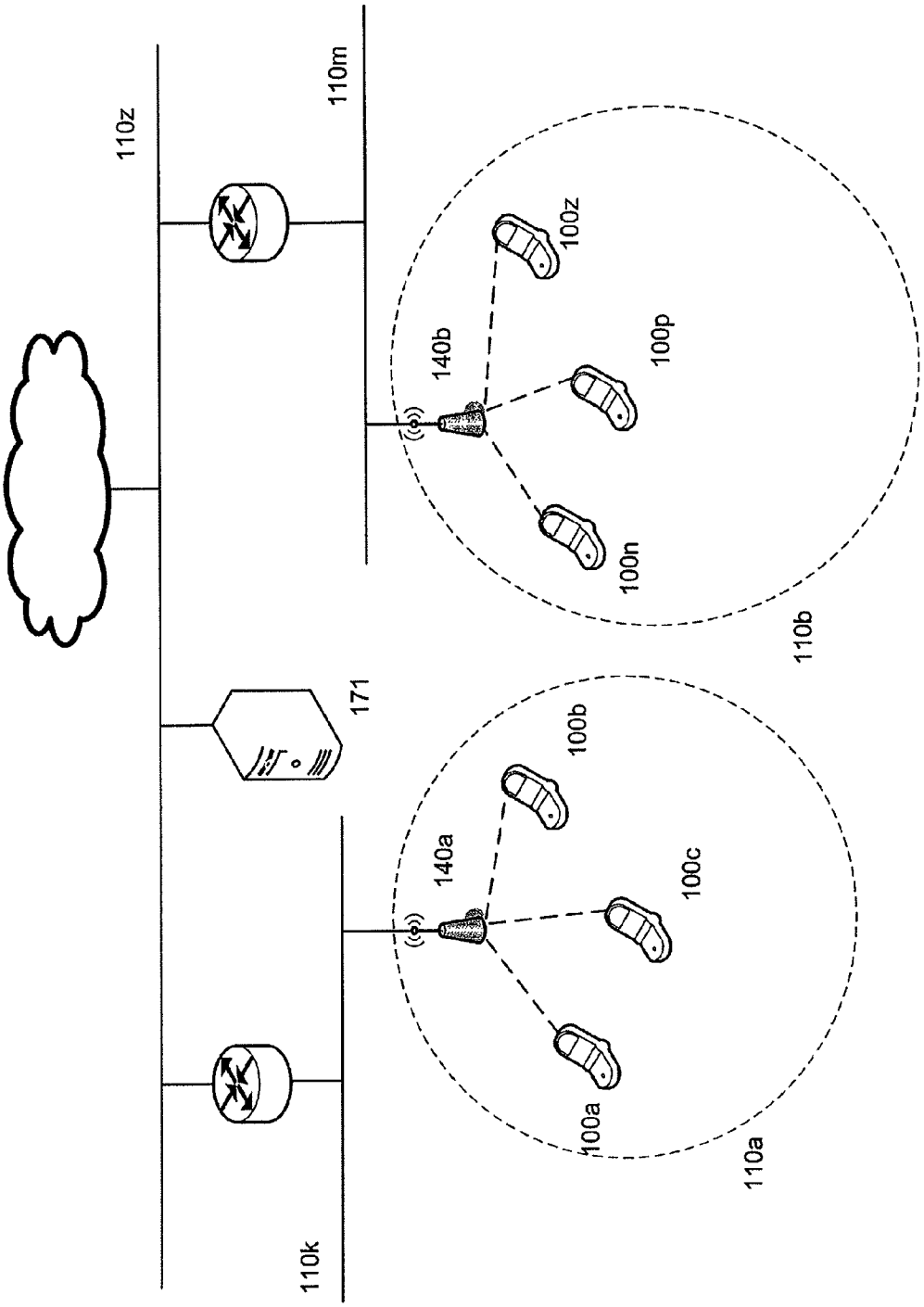
110z
110m
171
140b
100z
100p
100n
110b
140a
100b
100c
100a
110a
110k

Fig. 1

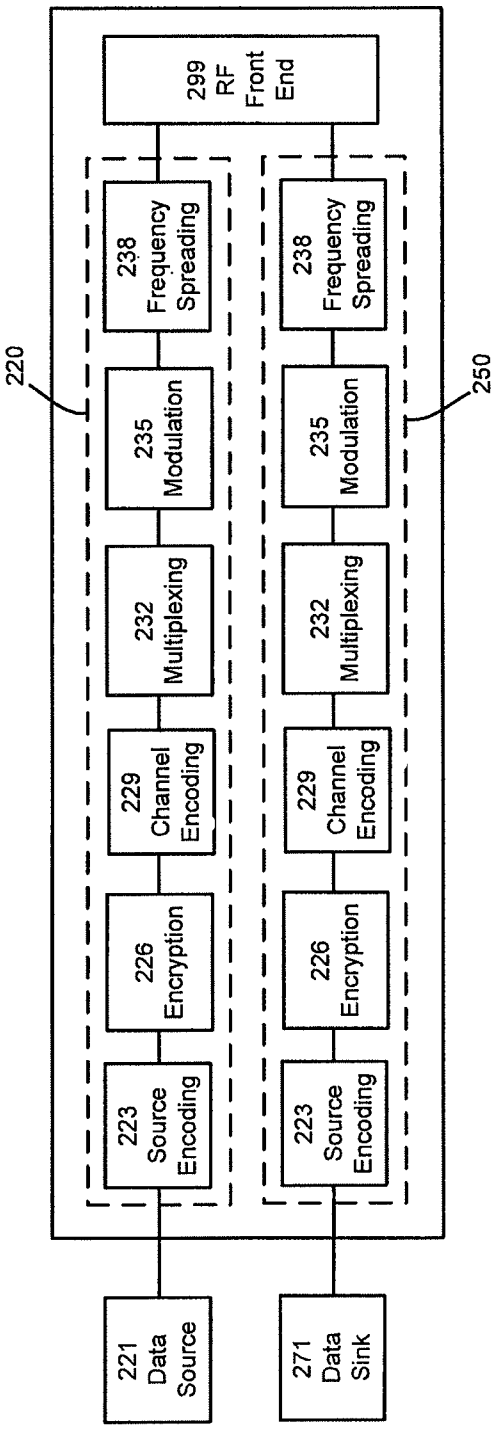
220
221 Data Source
223 Source Encoding
226 Encryption
229 Channel Encoding
232 Multiplexing
235 Modulation
238 Frequency Spreading
299 RF Front End
250
271 Data Sink
223 Source Encoding
226 Encryption
229 Channel Encoding
232 Multiplexing
235 Modulation
238 Frequency Spreading

Fig. 2

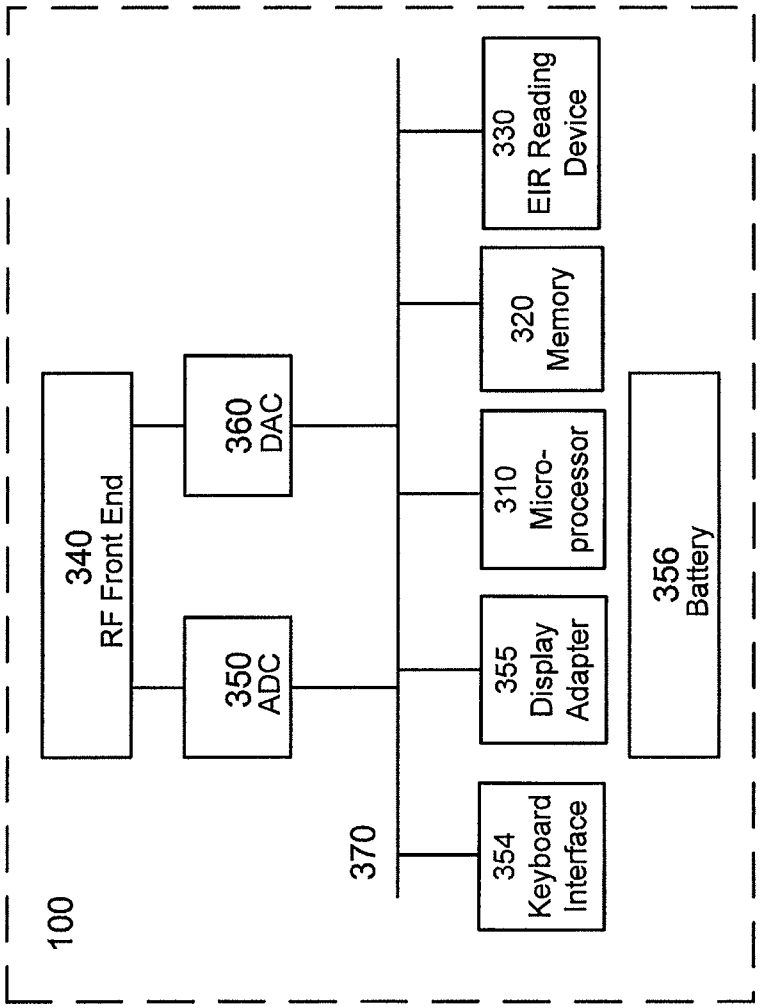
100
340
RF Front End
350
ADC
360
DAC
370
354
Keyboard
Interface
355
Display
Adapter
310
Micro-
processor
320
Memory
330
EIR Reading
Device
356
Battery

Fig. 3

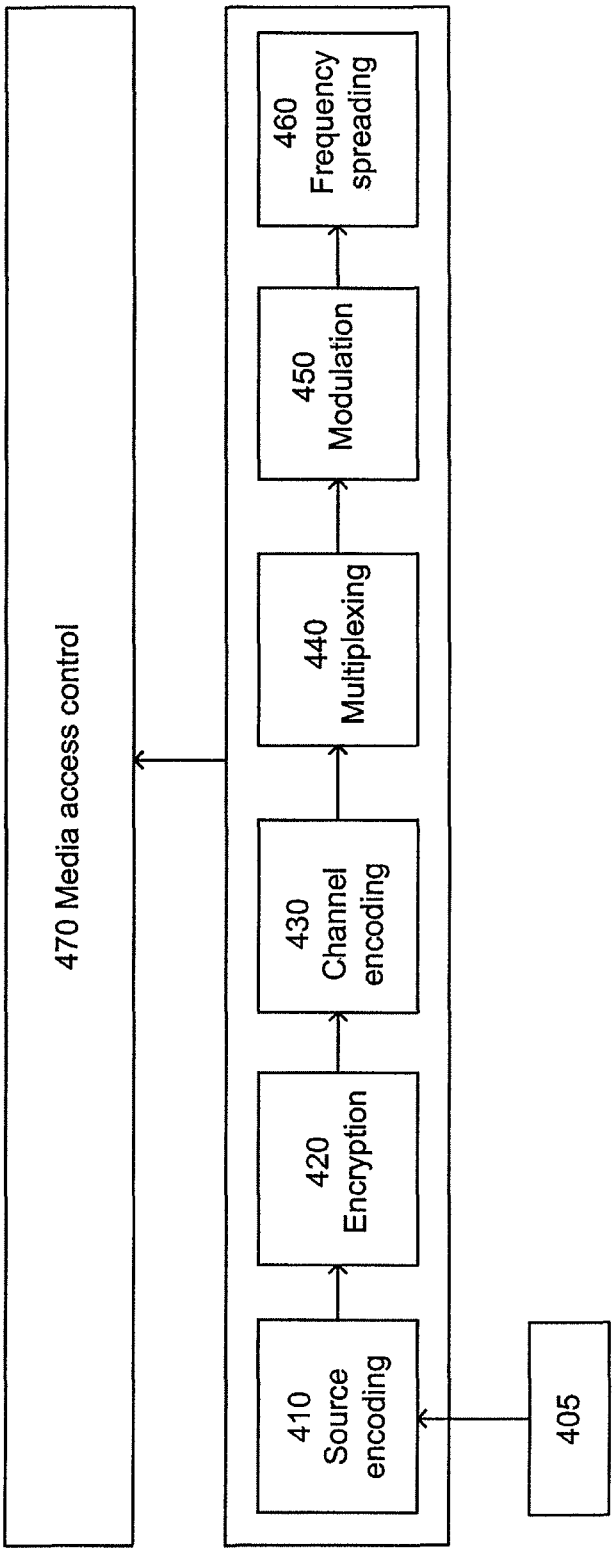
470 Media access control
410 Source encoding
420 Encryption
430 Channel encoding
440 Multiplexing
450 Modulation
460 Frequency spreading
405

Fig. 4

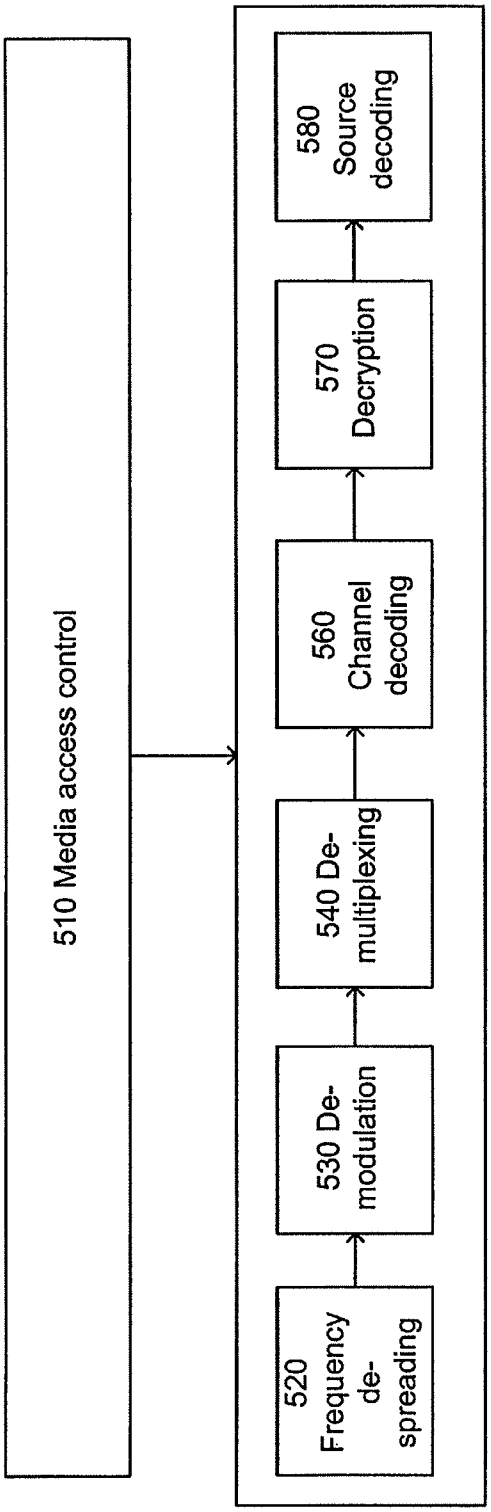
510 Media access control
520 Frequency de-spreading
530 De-modulation
540 De-multiplexing
560 Channel decoding
570 Decryption
580 Source decoding

Fig. 5

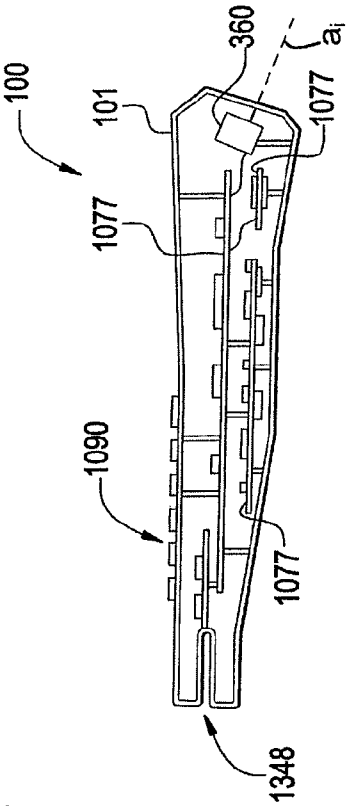
100
101
360
$a_i$
1077
1077
1090
1077
1348

FIG. 6b

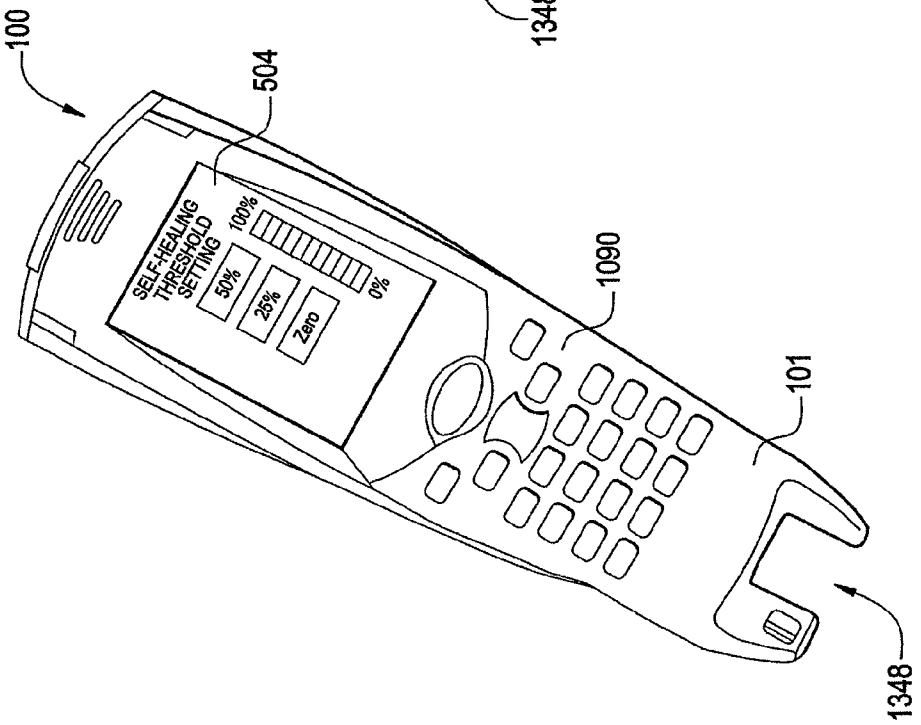
100
504
SELF-HEALING THRESHOLD SETTING
100%
0%
50%
25%
Zero
1090
101
1348

FIG. 6a

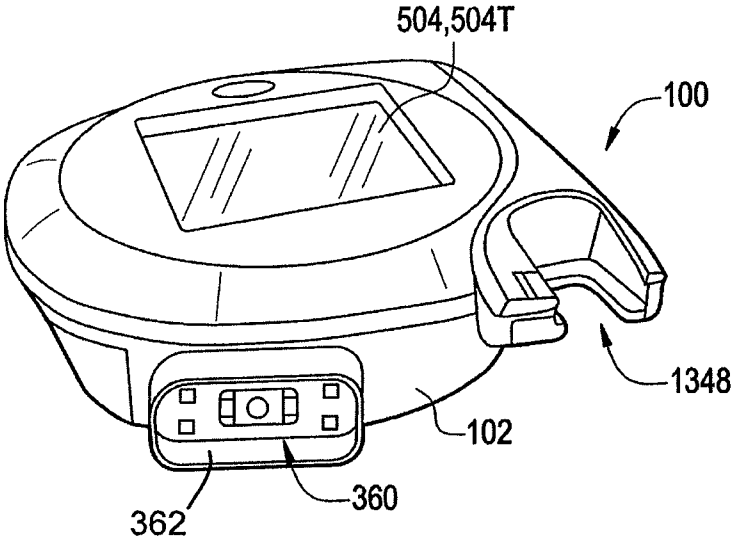


FIG. 7b

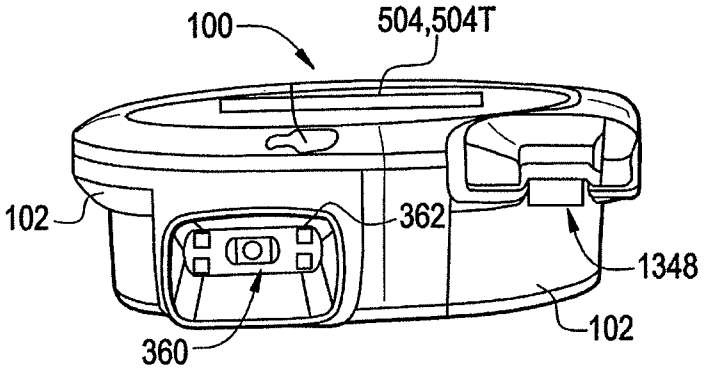


FIG. 7a

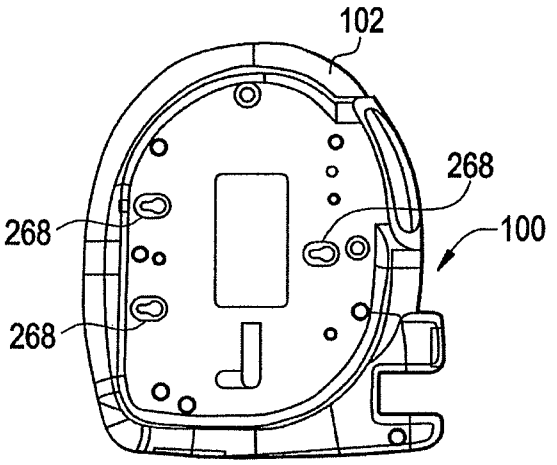


FIG. 7c

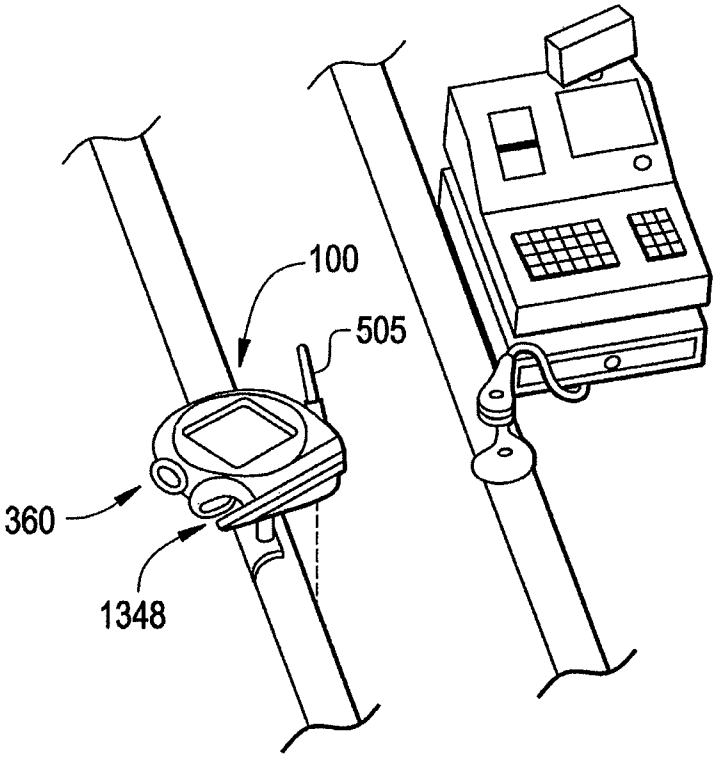


FIG. 8a

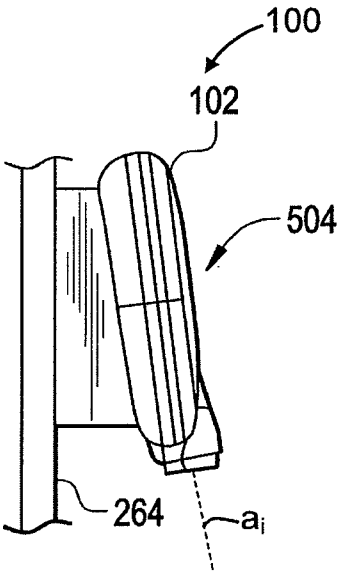


FIG. 8b

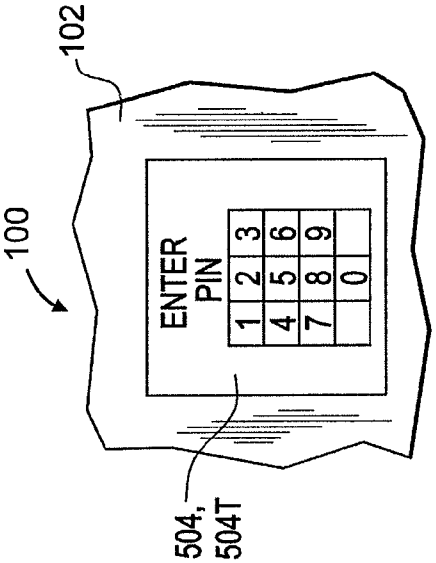
100
102
ENTER PIN
1 2 3
4 5 6
7 8 9
0
504, 504T

FIG. 8c

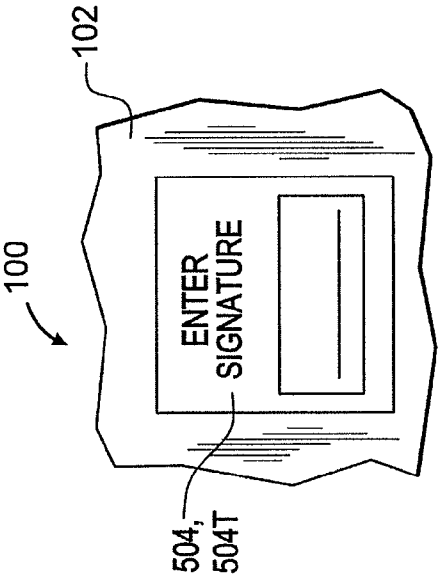
100
102
ENTER SIGNATURE
504, 504T

FIG. 8d

# ENCODED INFORMATION READING TERMINAL WITH USER-CONFIGURABLE MULTI-PROTOCOL WIRELESS COMMUNICATION INTERFACE

## CROSS REFERENCE TO RELATED APPLICATIONS

This application is a continuation of U.S. patent application Ser. No. 13/430,121 filed Mar. 26, 2012 which is a divisional application of U.S. patent application Ser. No. 12/567,158 filed Sep. 25, 2009. The above applications are incorporated herein by reference in their entireties.

## FIELD OF THE INVENTION

The invention is generally related to encoded information reading (EIR) terminals and is specifically related to an EIR terminal comprising a multi-protocol wireless communication interface.

## BACKGROUND OF THE INVENTION

Encoded information reading (EIR) terminals equipped with wireless communication interfaces are widely used in retail stores, shipping facilities, etc. While wireless communication of EIR terminals offers many advantages as compared to wired communications, traditional wireless communication interfaces have noticeable shortcomings, e.g., by failing to support more than one communication protocol and/or standard.

Accordingly, there is a need for further advances in EIR terminals and systems which would support multiple communication protocols and standards.

## SUMMARY OF THE INVENTION

In one embodiment, there is provided an encoded information reading (EIR) terminal comprising a microprocessor electrically coupled to a system bus, a memory communicatively coupled to the microprocessor, an encoded information reading (EIR) device, and a wireless communication interface.

The EIR device can be selected from the group consisting of a bar code reading device, an RFID reading device, and a card reading device. The EIR device can be configured to perform outputting raw message data containing an encoded message and/or outputting decoded message data corresponding to an encoded message.

The wireless communication interface can comprise a radio frequency front end configured to perform receiving a first radio signal and/or transmitting a second radio signal. The radio frequency front end can be electrically coupled to an analog-to-digital converter (ADC) which can be electrically coupled to the system bus and/or to a digital-to-analog converter (DAC) which can be electrically coupled to the system bus.

The microprocessor can be configured to execute a base-band encoder software program and/or a base-band decoder software program. The base-band encoder software program can be configured to produce a first encoded bit stream by performing at least one of the following functions: source encoding of a first bit stream, encryption, channel encoding, multiplexing, modulation, frequency spreading, and media access control. The DAC can be configured to output to the radio frequency front end an analog signal corresponding to the first encoded bit stream.



The ADC can be configured to output a second encoded bit stream corresponding to an analog signal produced by the radio frequency front end. The base-band decoder software program can be configured to produce a second bit stream corresponding to the second encoded bit stream by performing at least one of the following functions: media access control, frequency de-spreading, de-modulation, de-multiplexing, channel decoding, decryption, and source decoding.

In another embodiment, there is provided an encoded information reading terminal comprising a microprocessor electrically coupled to a system bus, a memory communicatively coupled to the microprocessor, an encoded information reading (EIR) device, and a wireless communication interface.

The EIR device can be selected from the group consisting of a bar code reading device, an RFID reading device, and a card reading device. The EIR device can be configured to perform outputting raw message data containing an encoded message and/or outputting decoded message data corresponding to an encoded message.

The wireless communication interface can comprise an RF front end configured to perform receiving a first radio signal and/or transmitting a second radio signal. The RF front can be end electrically coupled to an analog-to-digital converter (ADC) which can be electrically coupled to the system bus and/or to a digital-to-analog converter (DAC) which can be electrically coupled to the system bus.

The EIR terminal can be configured to execute a wireless communication protocol selector software program, which can optimize a value of a user-defined criterion in order to dynamically select a wireless communication network, a wireless communication protocol, and/or a parameter of a wireless communication protocol.

In another embodiment, there is provided an encoded information reading terminal comprising a microprocessor electrically coupled to a system bus, a memory communicatively coupled to the microprocessor, an encoded information reading (EIR) device, and a wireless communication interface.

The EIR device can be selected from the group consisting of a bar code reading device, an RFID reading device, and a card reading device. The EIR device can be configured to perform outputting raw message data containing an encoded message and/or outputting decoded message data corresponding to an encoded message.

The wireless communication interface can comprise an RF front end configured to perform receiving a first radio signal and/or transmitting a second radio signal. The RF front can be end electrically coupled to an analog-to-digital converter (ADC) which can be electrically coupled to the system bus and/or to a digital-to-analog converter (DAC) which can be electrically coupled to the system bus.

The EIR terminal can be configured to dynamically select a wireless communication network, a wireless communication protocol, and/or a parameter of a wireless communication protocol responsive a user action and/or to scanning a pre-defined bar code.

In another embodiment, there is provided an encoded information reading terminal comprising a microprocessor electrically coupled to a system bus, a memory communicatively coupled to the microprocessor, an encoded information reading (EIR) device, and a wireless communication interface configured to support at least two wireless communication protocols.

The EIR device can be selected from the group consisting of a bar code reading device, an RFID reading device, and a card reading device. The EIR device can be configured to

perform outputting raw message data containing an encoded message and/or outputting decoded message data corresponding to an encoded message.

The EIR terminal can be configured to execute a wireless communication protocol selector software program, which can optimize a value of a user-defined criterion in order to dynamically select a wireless communication network, a wireless communication protocol, and/or a parameter of a wireless communication protocol.

In a further embodiment, there is provided an encoded information reading terminal comprising a microprocessor electrically coupled to a system bus, a memory communicatively coupled to the microprocessor, an encoded information reading (EIR) device, and a wireless communication interface configured to support at least two wireless communication protocols.

The EIR device can be selected from the group consisting of a bar code reading device, an RFID reading device, and a card reading device. The EIR device can be configured to perform outputting raw message data containing an encoded message and/or outputting decoded message data corresponding to an encoded message.

The EIR terminal can be configured to dynamically select a wireless communication network, a wireless communication protocol, and/or a parameter of a wireless communication protocol responsive a user action and/or to scanning a pre-defined bar code.

## BRIEF DESCRIPTION OF THE DRAWINGS

For the purpose of illustrating the invention, the drawings show aspects of one or more embodiments of the invention. However, it should be understood that the present invention is not limited to the precise arrangements and instrumentalities shown in the drawings, wherein:

FIG. **1** depicts a network level layout of a data collection system employing EIR terminal according to the invention;

FIG. **2** depicts a functional layout of a wireless communication interface;

FIG. **3** depicts a component level layout of an EIR terminal according to the invention;

FIG. **4** illustrates the functions of the base-band encoder software program according to the invention;

FIG. **5** illustrates the functions of the base-band encoder software program according to the invention;

FIGS. **6***a* and **6***b* illustrate an exemplary hand held EIR terminal housing;

FIGS. **7***a*-**7***c* illustrate an exemplary portable and remountable EIR terminal housing;

FIG. **8***a* illustrates a first exemplary deployment of an EIR terminal according to the invention within a retail store;

FIG. **8***b* illustrates a second exemplary deployment of an EIR terminal according to the invention within a retail store;

FIGS. **8***c* and **8***d* illustrate PIN and signature data entry operational modes of an EIR terminal according to the invention.

The drawings are not necessarily to scale, emphasis instead generally being placed upon illustrating the principles of the invention. In the drawings, like numerals are used to indicate like parts throughout the various views.

## DETAILED DESCRIPTION OF THE INVENTION

There is provided an encoded information reading (EIR) terminal for incorporation in a data collection system. The data collection system, schematically shown in FIG. **1**, can include a plurality of EIR terminals **100***a*-**100***z* in communication with a plurality of interconnected networks **110***a*-**110***z*. In one aspect, the plurality of networks **110***a*-**110***z* can include at least one IEEE 802.11 conformant wireless network. In another aspect, an EIR terminal **100***a* can be in communication with at least one wireless device over Bluetooth™ wireless communication protocol. In a further aspect, the plurality of networks **110***a*-**110***z* can include at least one GSM wireless network. In a further aspect, the plurality of networks **110***a*-**110***z* can include at least one CDMA wireless network. Still further, the plurality of networks **110***a*-**110***z* can include at least one 3G wireless network, e.g., UMTS, HSUPA/HSDPA, or CDMA2000EvDO. In another aspect, the plurality of networks **110***a*-**110***z* can include at least one 4G wireless network, e.g., LTE, UWB, or 802.16 m (WiMax). A skilled artisan would appreciate the fact that wireless networks implementing other wireless communication protocols are within the spirit and the scope of the invention.

In one aspect, an EIR terminal can comprise a wireless communication interface. The EIR terminal **100***c* can establish a communication session with the host computer **171**. In one embodiment, network frames can be exchanged by the EIR terminal **100***c* and the host computer **171** via one or more routers, base stations, and other infrastructure elements. In another embodiment, the host computer **171** can be reachable by the EIR terminal **100***c* via a local area network (LAN). In a yet another embodiment, the host computer **171** can be reachable by the EIR terminal **100***c* via a wide area network (WAN). A skilled artisan would appreciate the fact that other methods of providing interconnectivity between the EIR terminal **100***c* and the host computer **171** relying upon LANs, WANs, virtual private networks (VPNs), and/or other types of network are within the spirit and the scope of the invention.

In a further aspect, the wireless communication interface can be configured to support at least two wireless communication protocols. In one embodiment, the wireless communication interface can be configured to support HSPA/GSM/GPRS/EDGE protocol family and CDMA/EV-DO protocol family. A skilled artisan would appreciate the fact that wireless communication interfaces supporting other communication protocols are within the spirit and the scope of the invention.

In one embodiment, the communications between the EIR terminal **100***c* and the host computer **171** can comprise a series of HTTP requests and responses transmitted over one or more TCP connections, although a person skilled in the art would appreciate the fact that using other transport and application level protocols is within the scope and the spirit of the invention.

In one aspect, at least one of the messages transmitted by the EIR terminal can include decoded message data corresponding to, e.g., a bar code label or an RFID label attached to a product or to a shipment item. For example, an EIR terminal can transmit a request to the host computer to retrieve product information corresponding to a product identifier encoded by a bar code label attached to the product, or to transmit an item tracking record for an item identified by a bar code label attached to the product.

A wireless communication interface **210** best viewed in FIG. **2**, can comprise a transmitter circuit **220** electrically coupled to a data source **221**. The transmitter circuit **220** can be implemented by one or more specialized microchips, and can perform the following functions: source encoding **223**, encryption **226**, channel encoding **229**, multiplexing **232**, modulation **235**, and frequency spreading **238**.

The wireless communication interface **210** of FIG. **2** can further comprise a receiver circuit **250** electrically coupled to the data sink **271**. The receiver circuit **250** can be imple-

mented by one or more specialized microchips, and can perform the following functions: frequency de-spreading **253**, demodulation **256**, de-multiplexing **259**, channel decoding **262**, decryption **265**, and source decoding **268**.

Each of the transmitter circuit **220** and receiver circuit **250** can be electrically coupled to a radio frequency (RF) front end **299**. The RF front end **299** can be used to convert high frequency RF signals to/from base-band or intermediate frequency signals. A skilled artisan would appreciate the fact that RF front ends of different data rates, sensitivities, output powers, operating frequencies, and measurement resolutions are within the scope and spirit of the invention.

On the receiving side, the RF front-end **299** can include all filters, low-noise amplifiers (LNAs), and down-conversion mixer(s) needed to process modulated RF signals received by the antenna into based-band signals. In one embodiment, the receiving part of the RF front end **299** can comprise one or more of the following components:

- a first matching circuit to transfer to the next stage the energy received by the antenna;
- a band-pass filter (BPF) to knock down out-of-band jammers;
- a second matching circuit at the input of a low-noise amplifier (LNA);
- the LNA, the primary responsibility of which is to set the sensitivity of the receiver, by providing a high gain;
- a third matching circuit between the LNA output and the receive (RX) mixer (down-converter);
- the down-conversion RX mixer.

On the transmitting side, the RF frond-end area can be described as a "mirrored" version of a receiver. The front end of a transmitter up converts an outgoing base-band signal and then feeds the signal to a high power amplifier. A skilled artisan would appreciate the fact that other ways of implementing the RF front end are within the spirit and the scope of the invention.

According to one embodiment of the invention, the wireless communication interface supporting at least two wireless communication protocols can be implemented using a single dual-protocol (or multi-protocol) chipset. The chipset can include integrated circuits (ICs), application specific integrated circuits (ASICs), and/or other components providing the necessary functionality.

In another embodiment, the wireless communication interface supporting at least two wireless communication protocols can be implemented using two or more chipsets. Each of the chipsets can include integrated circuits (ICs), application specific integrated circuits (ASICs), and/or other components providing the necessary functionality.

In a yet another embodiment, at least some of the functions of the transmitter circuit and the receiver circuit can be advantageously performed by one or more software programs executed by a microprocessor. In one embodiment the EIR terminal **100** can comprise at least one microprocessor **310** and a memory **320**, both coupled to the system bus **370**, as best viewed in FIG. **3**.

The microprocessor **310** can be provided by a general purpose microprocessor or by a specialized microprocessor (e.g., an ASIC). In one embodiment, the EIR terminal **100** can comprise a single microprocessor which can be referred to as a central processing unit (CPU) and which can perform at least some of the functions of the transmitter circuit and the receiver circuit. In another embodiment, the EIR terminal **100** can comprise two or more microprocessors; for example, a CPU providing some or most of the EIR functionality and a specialized microprocessor performing some of the functions of the transmitter circuit and the receiver circuit. A skilled artisan would appreciate the fact that different schemes of processing tasks distribution among the two or more microprocessors are within the spirit and the scope of the invention.

The EIR terminal **100** can further comprise one or more encoded information reading (EIR) devices **330**, including a bar code reading device, an RFID reading device, and a card reading device, also coupled to the system bus **370**. In one embodiment, an EIR reading device can be capable of outputting decoded message data corresponding to an encoded message. In another embodiment, the EIR reading device can output raw message data containing an encoded message, e.g., raw image data or raw RFID data.

Of course, devices that read bar codes, read RFID, or read cards bearing encoded information may read more than one of these categories while remaining within the scope of the invention. For example, a device that reads bar codes may include a card reader, and/or RFID reader; a device that reads RFID may also be able to read bar codes and/or cards; and a device that reads cards may be able to also read bar codes and/or RFID. For further clarity, it is not necessary that a device's primary function involve any of these functions in order to be considered such a device; for example, a cellular telephone, smartphone, or PDA that is capable of reading bar codes is a device that reads bar codes for purposes of the present invention

The EIR terminal **100** can further comprise a keyboard interface **354** and a display adapter **355**, both also coupled to the system bus **370**. The EIR terminal **100** can further comprise a battery **356**.

In a further aspect, the EIR terminal **100** can further comprise an RF front end **340**. In a further aspect, the EIR terminal **100** can further comprise an analog-to-digital (ADC) converter **350**, the input of which can be electrically coupled to the RF front end **340**. The choice of ADC can be determined by the receiver architecture, and can depend upon the selectivity of the filters, the dynamic range afforded by the front-end amplifiers, and the bandwidth and type of modulation to be processed. For example, the level or dynamic range of signals expected to be presented to the ADC will dictate the bit resolution needed for the converter. An ADC can also be specified in terms of its spurious-free dynamic range (SFDR). The ADC's sensitivity can be influenced by wideband noise, including spurious noise, and can be improved through the use of an anti-aliasing filter at the input of the ADC to eliminate sampling of noise and high-frequency spurious products. To avoid aliasing when converting analog signals to the digital domain, the ADC sampling frequency must be at least twice the maximum frequency of the input analog signal. This minimum sampling condition derived from Nyquist's theorem, must be met in order to capture enough information about the input analog waveform to reconstruct it accurately. In addition to selecting an ADC for IF or baseband sampling, the choice of buffer amplifier to feed the input of the converter can affect the performance possible with a given sampling scheme. The buffer amplifier should provide the rise/fall time and transient response to preserve the modulation information of the IF or base-band signals, while also providing the good amplitude accuracy and flatness needed to provide signal amplitudes at an optimum input level to the ADC for sampling.

In another embodiment, the EIR terminal **100** can further comprise a digital-to-analog (DAC) converter **360**, the output of which can be electrically coupled to the RF front end **340**. In a further aspect, a DAC can be viewed as a component providing a function reversed to that of an ADC.

In a further aspect, the output of the ADC **350**, and the input of the DAC **360** can be electrically coupled to a system bus

370. A skilled artisan would appreciate the fact that other microprocessors, memory, and/or peripheral devices can be electrically coupled to the system bus **370** without departing from the scope and the spirit of the invention.

In another aspect, the microprocessor **310** can execute a base-band encoder software program which can encode a bit stream which needs to be transmitted over a wireless medium. The encoded bit stream outputted by the base-band encoder software program can be fed to the input of the DAC **360**. The analog signal representative of the encoded bit stream can be outputted by the DAC **360** to the RF front end **340** in order to be transmitted over a wireless medium.

In one embodiment, the base-band encoder software program **400** can perform at least one of the following functions schematically shown in FIG. **4**: source encoding **410** of a bit stream **405**, encryption **420**, channel encoding **430**, multiplexing **440**, modulation **450**, frequency spreading **460**, and media access control **470**. In one embodiment, the remaining functions (i.e., those not implemented by the base-band encoder software program) can be implemented by one or more dedicated hardware components.

In one aspect, the source encoding function **410** can be provided by a process of encoding information using a different number of bits (or other information bearing units) than an un-encoded representation would use, through use of specific encoding schemes.

In another aspect, the encryption function **420** can be implemented by using an algorithm (cipher) suitable to transform an unencrypted ("plain text") information stream to an encrypted information stream.

In a further aspect, the channel encoding function **430** can be provided by a process suitable to encode the transmitted information stream into a form, which would allow guaranteed reliable information transmission at a rate close to the maximum channel capacity. According to the Shannon theorem, for a given bandwidth and signal-to-noisy ratio, the theoretical maximum channel capacity (reliable information transfer rate) for a particular noise level is defined by the following equation:

$$C = B\log_2\left(1 + \frac{S}{N}\right).$$

For any information transmission rate R<C, there exists an encoding scheme that would allow the probability of errors at the receiver to be made less than a pre-defined value $\epsilon$. The channel encoding function **430** can select and/or implement an encoding scheme for a pre-defined value of $\epsilon$.

In a further aspect, the multiplexing function **440** can be employed to combine multiple signals or data streams into one signal transmitted over a shared physical transmission medium (wireless channel). The multiplexing function **440** can implement one or more of the multiplexing technologies including TDMA (Time division multiple access), FDMA (Frequency division multiple access), CDMA (Code division multiple access), CSMA (Carrier sense multiple access), etc.

In a further aspect, the frequency spreading function **460** can implement one or more of the following technologies: DSSS (Direct Sequence Spread Spectrum), FHSS (Frequency Hopping Spread Spectrum), and OFDM (Orthogonal Frequency Division Multiplexing).

In a further aspect, the media access control function **470** can provide addressing and channel access control mechanisms.

In another aspect, the RF front end **340** can output to the ADC **350** an analog signal representative of a signal received over the wireless medium. The ADC **350** can output a digital signal representative of the analog signal outputted by the RF front end **340**. The microprocessor **310** can execute a base-band decoder software program which can input the digital signal outputted by the ADC **350** and can decode the digital signal into a form suitable for further processing by other software programs.

In a further aspect, the base-band decoder software program **500** can perform at least at least one of the following functions schematically shown in FIG. **5**: media access control **510**, frequency de-spreading **520**, de-modulation **530**, de-multiplexing **540** the analog signal, channel decoding **560**, decryption **570**, and source decoding **580**. In one embodiment, the remaining functions (i.e., those not implemented by the base-band decoder software program) can be implemented by one or more dedicated hardware components.

In one aspect, each of the frequency de-spreading **520**, de-modulation **530**, de-multiplexing **540**, channel decoding **560**, decryption **570**, and source decoding **580** functions can be implemented as a reverse function of the frequency spreading **460**, modulation **450**, multiplexing **440**, channel encoding **430**, encryption **420**, source encoding **410** functions, respectively.

In another aspect, the base-band encoder software program can be implemented as two or more software programs. In another aspect, the base-band decoder software program can be implemented as two or more software programs. In a further aspect, the base-band encoder software program and the base-band decoder software program can be implemented as a single software program.

In another aspect, due to advantageously performing at least some of the source bit stream encoding functions by a software program, the EIR terminal **100** can be devoid of dedicated hardware components configured to implement at least one of the following functions: source encoding of said first bit stream, encryption, channel encoding, multiplexing, modulation, frequency spreading, and media access control.

In another aspect, due to advantageously performing at least some of the analog signal decoding functions by a software program, the EIR terminal **100** can be devoid of dedicated hardware components configured to implement at least one of the following functions: media access control, frequency de-spreading, de-modulation, de-multiplexing, channel decoding, decryption, and source decoding.

In a further aspect, the EIR terminal **100** can be configured to dynamically select a wireless communication network, a wireless communication protocol, or one or more parameters of the wireless communication protocol (e.g., frequency or transmission power) to be used by the RF front end **340**.

Due to its ability to dynamically select a wireless communication network and a wireless communication protocol, the EIR terminal **100** according to the present invention can be advantageously used, e.g., by a company operating in several geographies with different wireless communication standards. Using the EIR terminal **100** according to the present invention would allow such a company to deploy the same EIR terminal **100** model in all the geographies.

In one embodiment, selection of a wireless communication network, a wireless communication protocol, or one or more parameters of a wireless communication protocol can be performed manually by the user of the EIR terminal **100**. In one embodiment, the selection can be performed by scanning a pre-defined bar code. In another embodiment, the selection can be performed by the user interacting with the user interface (e.g., via a graphical user interface (GUI), or via a hard-

ware-implemented control). A skilled artisan would appreciate the fact that other methods of manually selecting a wireless communication network, a wireless communication protocol, or one or more parameters of the wireless communication protocol are within the scope and the spirit of the invention.

In another embodiment, selection of a wireless communication network, a wireless communication protocol, or one or more parameters of the wireless communication protocol can be performed by a wireless communication protocol selector software program executed by the EIR terminal **100**. The wireless communication protocol selector software program can optimize a value of a user-defined criterion.

In one embodiment, the value of the user-defined criterion can be calculated based on one or more of the following parameters: frequency range, network status, signal strength, service cost, communication channel throughput, and user preferences. The user preferences can be represented, e.g., by network preference, service preference, protocol preference, or frequency preference. A skilled artisan would appreciate the fact that other types of user preferences are within the spirit and the scope of the invention.

In one embodiment, the value of the user-defined criterion can be calculated as a weighted sum of components each of which is represented by either a parameter itself (e.g., the signal strength) or a difference between the value of a parameter and the desired value of the parameter (e.g., communication channel throughput). In another embodiment, the value of the user-defined criterion can be calculated as a square root of a weighted sum of squares of components each of which is represented by either a parameter itself (e.g., the signal strength) or a difference between the value of a parameter and the desired value of the parameter (e.g., communication channel throughput). A skilled artisan would appreciate the fact that other methods of calculating the user-defined criterion value are within the scope and spirit of the invention.

For example, if a user is more concerned about the cost than about other communication parameters, the user would want the user-defined criterion to yield the cheapest covered service provider (while the bandwidth, frequency range, and/or network protocol can possibly be secondary factors affecting the service provider and/or network selection). In another example, if a user is more concerned about the signal quality than about other communication parameters, the user would want the user-defined criterion to yield the network with best quality (while the cost can be a secondary factor affecting the service provider and/or network selection). In a yet another example, if a user is more concerned about maintaining uninterrupted communication session than about other communication parameters, the user would want the user-defined criterion to yield the network with best connection reliability (while the bandwidth, frequency range, and/or network protocol can possibly be secondary factors affecting the service provider and/or network selection). A skilled artisan would appreciate the fact that other methods of defining the user-defined criterion are within the scope and the spirit of the invention.

In one embodiment, the EIR terminal **100** can be configured to search beacon signals over a pre-defined frequency range (e.g., between 800 MHz and 5 GHz), and then select a wireless communication network and/or frequency channel which would produce the optimal value of the user-defined criterion.

In one embodiment, the value of the user-defined criterion can be calculated immediately before the EIR terminal **100** attempts to initiate a communication session, so that a wireless communication network and/or a wireless communication protocol can be chosen which would optimize the user-defined criterion.

In another embodiment, the value of the user-defined criterion can be calculated periodically at established time intervals so that the EIR terminal **100** can change the wireless communication network and/or the wireless communication protocol between communication sessions or during a communication session if a wireless communication network and/or a wireless communication protocol is detected yielding a value of the user-defined criterion which is closer to the optimum than that of the current network or protocol. In yet another embodiment, the value of a user-defined criterion can be calculated responsive to a pre-defined event (e.g., the signal quality falling below a pre-defined level, or the signal quality exceeding a pre-defined threshold), so that the EIR terminal **100** can automatically (i.e., without user intervention) change the wireless communication network and/or the wireless communication protocol between communication sessions or during a communication session. Thus, the EIR terminal **100** can always maintain a network connection irrespectively of changing external conditions (e.g., when the terminal is physically moved).

Form factors and housings for the EIR terminal **100** according to the invention are now being described. The components of EIR terminal **100** can be incorporated into a variety of different housings. As indicated by the embodiment of FIGS. **6***a* and **6***b*, the components of FIG. **5** can be incorporated into a hand held housing **101**. EIR terminal **100** of FIGS. **6***a* and **6***b* is in the form factor of a hand held portable data terminal. EIR terminal **100** as shown in FIGS. **6***a* and **6***b* includes a keyboard **1090**, a display **504** having an associated touch screen overlay, a card reader **1348**, and an imaging module **360** which includes the components of imaging assembly as described herein; namely, image sensor array incorporated on an image sensor IC chip. Imaging module **360** has an associated imaging axis, $a_i$. As indicated by the side view of FIG. **6***b*, the components of the block diagram of FIG. **5** may be supported within housing **101** on a plurality of circuit boards **1077**. Imaging module **360** may include an image sensor array having color sensitive pixels as described in U.S. Provisional Patent Application Nos. 60/687,606, filed Jun. 3, 2005, 60/690,268, filed Jun. 14, 2005, 60/692,890, filed Jun. 22, 2005, and 60/694,371, filed Jun. 27, 2005, all of which are entitled Digital Picture Taking Optical Reader Having Hybrid Monochrome And Color Image Sensor, and all of which are incorporated herein by reference.

In the embodiment of FIGS. **7***a*-**7***c*, the EIR terminal **100** is in the form of a transaction terminal which may be configured as a retail purchase transaction terminal or as a price verifier. Housing **102** of the transaction terminal shown in FIGS. **7***a*-**7***c* is configured to be portable so that it can be moved from location to location and is further configured to be replaceably mounted on a fixed structure such as a fixed structure of a cashier station or a fixed structure of the retail store floor (e.g., a shelf, a column **264** best viewed in FIG. **8***b*). Referring to bottom view of FIG. **7***c*, the housing **102** of the EIR terminal **100** has formations **268** facilitating the replaceable mounting of EIR terminal **100** on a fixed structure. Referring now to FIG. **7***b*, EIR terminal **100** includes a display **504** having an associated touch screen **504**T, a card reader **1348**, an imaging module **360**, and a luminous shroud **362**. When light from the illumination block (not shown in FIG. **8**) strikes luminous shroud **362**, the shroud glows to attract attention to the location of imaging assembly. In certain operating modes as indicated in FIG. **8***c*, the EIR terminal **100** in accordance with any of FIGS. **7***a*-**7***c*, displays on display **504** a PIN entry

screen prompting a customer to enter PIN information into touch screen **504**T. In other operating modes, as indicated in FIG. **8***d*, the EIR terminal **100** displays on display **504** a signature prompt screen prompting a customer to enter signature information into the device with use of a stylus **505**.

Referring to FIGS. **8***a* and **8***b*, various installation configurations for the EIR terminal of FIGS. **7***a*-**7***c* are shown. In the view of FIG. **8***a*, the EIR terminal **100** is installed as a retail purchase transaction terminal at a point of sale cashier station. In the setup of FIG. **8***a*, the EIR terminal **100** is configured as a retail purchase transaction terminal and is utilized to aid and facilitate retail transactions at a point of sale. A customer may enter a credit card or a debit card into card reader **1348** and retail purchase transaction terminal may transmit the credit card information to credit/debit authorization network.

In the view of FIG. **8***b*, the EIR terminal **100** is configured as a price verifier to aid customers in checking prices of products located on a store floor. EIR terminal **100** may be mounted on a shelf (not shown in FIG. **8***b*) or on a column **254** or other fixed structure of the retail store. EIR terminal **100** may decode bar code data from bar codes on store products and transmit decoded out bar code messages to a store server for lookup of price information which is sent back from the store server to terminal **100** for display on display **504**.

While the present invention has been particularly shown and described with reference to certain exemplary embodiments, it will be understood by one skilled in the art that various changes in detail may be affected therein without departing from the spirit and scope of the invention as defined by claims that can be supported by the written description and drawings. Further, where exemplary embodiments are described with reference to a certain number of elements it will be understood that the exemplary embodiments can be practiced utilizing less than the certain number of elements.

A small sample of systems methods and apparatus that are described herein is as follows:

A1. An encoded information reading (EIR) terminal comprising:

a microprocessor electrically coupled to a system bus;

a memory communicatively coupled to said microprocessor;

an encoded information reading (EIR) device selected from the group consisting of a bar code reading device, an RFID reading device, and a card reading device, said EIR device configured to perform at least one of outputting raw message data containing an encoded message and outputting decoded message data corresponding to an encoded message; and

a wireless communication interface comprising a radio frequency front end configured to perform at least one of receiving a first radio signal and transmitting a second radio signal, said radio frequency front end electrically coupled to at least one of an analog-to-digital converter (ADC) electrically coupled to said system bus and a digital-to-analog converter (DAC) electrically coupled to said system bus;

wherein said microprocessor is configured to execute at least one of a base-band encoder software program and a base-band decoder software program;

wherein said base-band encoder software program is configured to produce a first encoded bit stream by performing at least one of the following functions: source encoding of a first bit stream, encryption, channel encoding, multiplexing, modulation, frequency spreading, and media access control;

wherein said DAC is configured to output to said radio frequency front end an analog signal corresponding to said first encoded bit stream;

wherein said ADC is configured to output a second encoded bit stream corresponding to an analog signal produced by said radio frequency front end; and

wherein said base-band decoder software program is configured to produce a second bit stream corresponding to said second encoded bit stream by performing at least one of the following functions: media access control, frequency de-spreading, de-modulation, de-multiplexing, channel decoding, decryption, and source decoding.

A2. The EIR terminal of claim A1, wherein said EIR terminal is devoid of dedicated hardware components configured to implement at least one of the following functions: source encoding of said first bit stream, encryption, channel encoding, multiplexing, modulation, frequency spreading, media access control, frequency de-spreading, de-modulation, de-multiplexing, channel decoding, decryption, and source decoding.

A3. The EIR terminal of claim A1, wherein said base-band encoder software program and said base-band decoder software program are implemented as a single software program.

A4. The EIR terminal of claim A1, wherein said base-band encoder software program is performed by at least one of a general purpose microprocessor, a specialized microprocessor.

A5. The EIR terminal of claim A1, wherein said base-band decoder software program is performed by at least one of a general purpose microprocessor, a specialized microprocessor.

A6. The EIR terminal of claim A1 further comprising a central processing unit (CPU);

wherein said base-band encoder software program is performed by at least one of said CPU, a specialized microprocessor.

A7. The EIR terminal of claim A1 further comprising a central processing unit (CPU);

wherein said base-band decoder software program is performed by at least one of said CPU, a specialized microprocessor.

A8. The EIR terminal of claim A1 further comprising a wireless communication protocol selector software program, said wireless communication protocol software program configured to optimize a value of a user-defined criterion in order to dynamically select at least one of a wireless communication network, a wireless communication protocol, and a parameter of a wireless communication protocol.

A9. The EIR terminal of claim A1 further comprising a wireless communication protocol selector software program, said wireless communication protocol software program configured to optimize a value of a user-defined criterion in order to dynamically select at least one of a wireless communication network, a wireless communication protocol, and a parameter of a wireless communication protocol;

wherein said value of said user-defined criterion is calculated based on at least one of network status, communication quality, signal strength, service cost, bandwidth, a user preference, and communication channel throughput.

A10. The EIR terminal of claim A1 further comprising a wireless communication protocol selector software program, said wireless communication protocol software program configured to optimize a value of a user-defined criterion in order to dynamically select at least one of a wireless communication network, a wireless communication protocol, and a parameter of a wireless communication protocol;

wherein said value of said user-defined criterion is calculated as a weighted sum of components, at least one of said

components represented by at least one of a network status, communication quality, signal strength, service cost, bandwidth, a user preference, and communication channel throughput.

A11. The EIR terminal of claim A1 further comprising a wireless communication protocol selector software program, said wireless communication protocol software program configured to optimize a value of a user-defined criterion in order to dynamically select at least one of a wireless communication network, a wireless communication protocol, and a parameter of a wireless communication protocol;

wherein said value of said user-defined criterion is calculated as a weighted sum of components, at least one of said components represented by a difference between an actual value and a desired value of at least one of a network status, communication quality, signal strength, service cost, bandwidth, and communication channel throughput.

A12. The EIR terminal of claim A1 further comprising a wireless communication protocol selector software program, said wireless communication protocol software program configured to optimize a value of a user-defined criterion in order to dynamically select at least one of a wireless communication network, a wireless communication protocol, and a parameter of a wireless communication protocol;

wherein said value of said user-defined criterion is calculated as a square root of a weighted sum of squares of components, at least one of said components represented by at least one of a network status, communication quality, signal strength, service cost, bandwidth, a user preference, and communication channel throughput.

A13. The EIR terminal of claim A1 further comprising a wireless communication protocol selector software program, said wireless communication protocol software program configured to optimize a value of a user-defined criterion in order to dynamically select at least one of a wireless communication network, a wireless communication protocol, and a parameter of a wireless communication protocol;

wherein said value of said user-defined criterion is calculated as a square root of a weighted sum of squares of components, at least one of said components represented by a difference between an actual value and a desired value of at least one of network status, communication quality, signal strength, service cost, bandwidth, a user preference, and communication channel throughput.

A14. The EIR terminal of claim A1 further comprising a wireless communication protocol selector software program, said wireless communication protocol software program configured to optimize a value of a user-defined criterion in order to dynamically select at least one of a wireless communication network, a wireless communication protocol, and a parameter of a wireless communication protocol;

wherein said EIR terminal is configured to search beacon signals over a pre-defined frequency range, and then select at least one of a wireless communication network and frequency channel which optimizes said user-defined criterion.

A15. The EIR terminal of claim A1 further comprising a wireless communication protocol selector software program, said wireless communication protocol software program configured to optimize a value of a user-defined criterion in order to dynamically select at least one of a wireless communication network, a wireless communication protocol, and a parameter of a wireless communication protocol;

wherein said EIR terminal is configured to evaluate said user-defined criterion before attempting to initiate a communication session.

A16. The EIR terminal of claim A1 further comprising a wireless communication protocol selector software program, said wireless communication protocol software program configured to optimize a value of a user-defined criterion in order to dynamically select at least one of a wireless communication network, a wireless communication protocol, and a parameter of a wireless communication protocol;

wherein said EIR terminal is configured to switch at least one of said wireless communication network and said wireless communication protocol responsive to evaluating said user-defined criterion.

A17. The EIR terminal of claim A1 further comprising a wireless communication protocol selector software program, said wireless communication protocol software program configured to optimize a value of a user-defined criterion in order to dynamically select at least one of a wireless communication network, a wireless communication protocol, and a parameter of a wireless communication protocol;

wherein said EIR terminal is configured to evaluate said user-defined criterion responsive to a pre-defined event.

A18. The EIR terminal of claim A1 further comprising a wireless communication protocol selector software program, said wireless communication protocol software program configured to optimize a value of a user-defined criterion in order to dynamically select at least one of a wireless communication network, a wireless communication protocol, and a parameter of a wireless communication protocol;

wherein said EIR terminal is configured to periodically evaluate said user-defined criterion.

A19. The EIR terminal of claim A1 further configured to dynamically select at least one of a wireless communication network, a wireless communication protocol, and a parameter of a wireless communication protocol responsive to a user action.

A20. The EIR terminal of claim A1 further configured to dynamically select at least one of a wireless communication network, a wireless communication protocol, and a parameter of a wireless communication protocol responsive to scanning a pre-defined bar code.

B1. An encoded information reading terminal comprising:

a microprocessor electrically coupled to a system bus;

a memory communicatively coupled to said microprocessor;

an encoded information reading (EIR) device selected from the group consisting of a bar code reading device, an RFID reading device, and a card reading device, said EIR device configured to perform at least one of outputting raw message data containing an encoded message and outputting decoded message data corresponding to an encoded message; and

a wireless communication interface comprising an RF front end configured to perform at least one of receiving a first radio signal and transmitting a second radio signal, said RF front end electrically coupled to at least one of an analog-to-digital converter (ADC) electrically coupled to said system bus and a digital-to-analog converter (DAC) electrically coupled to said system bus;

wherein said microprocessor is configured to execute at least one of a base-band encoder software program and a base-band decoder software program;

wherein said EIR terminal is configured to execute a wireless communication protocol selector software program, said wireless communication protocol selector software program configured optimize a value of a user-defined criterion in order to dynamically select at least one of a wireless communication network, a wireless communication protocol, and a parameter of a wireless communication protocol.

B2. The EIR terminal of claim B1, wherein said base-band encoder software program and said base-band decoder software program are implemented as a single software program.

B3. The EIR terminal of claim B1, wherein said base-band encoder software program is performed by at least one of a general purpose microprocessor, a specialized microprocessor.

B4. The EIR terminal of claim B1, wherein said base-band decoder software program is performed by at least one of a general purpose microprocessor, a specialized microprocessor.

B5. The EIR terminal of claim B1 further comprising a central processing unit (CPU);

wherein said base-band encoder software program is performed by at least one of said CPU, a specialized microprocessor.

B6. The EIR terminal of claim B1 further comprising a central processing unit (CPU);

wherein said base-band decoder software program is performed by at least one of said CPU, a specialized microprocessor.

B7. The EIR terminal of claim B1, wherein said value of said user-defined criterion is calculated based on at least one of network status, communication quality, signal strength, service cost, bandwidth, a user preference, and communication channel throughput.

B8. The EIR terminal of claim B1, wherein said value of said user-defined criterion is calculated as a weighted sum of components, at least one of said components represented by at least one of network status, communication quality, signal strength, service cost, bandwidth, a user preference, and communication channel throughput.

B9. The EIR terminal of claim B1, wherein said value of said user-defined criterion is calculated as a weighted sum of components, at least one of said components represented by a difference between an actual value and a desired value of at least one of network status, communication quality, signal strength, service cost, bandwidth, and communication channel throughput.

B10. The EIR terminal of claim B1, wherein said value of said user-defined criterion is calculated as a square root of a weighted sum of squares of components, at least one of said components represented by at least one of network status, communication quality, signal strength, service cost, bandwidth, a user preference, and communication channel throughput.

B11. The EIR terminal of claim B1, wherein said value of said user-defined criterion is calculated as a square root of a weighted sum of squares of components, at least one of said components represented by a difference between an actual value and a desired value of at least one of network status, communication quality, signal strength, service cost, bandwidth, a user preference, and communication channel throughput.

B12. The EIR terminal of claim B1, wherein said EIR terminal is configured to search beacon signals over a pre-defined frequency range, and then select at least one of a wireless communication network and frequency channel which optimizes said user-defined criterion.

B13. The EIR terminal of claim B1, wherein said EIR terminal is configured to evaluate said user-defined criterion before attempting to initiate a communication session.

B14. The EIR terminal of claim B1, wherein said EIR terminal is configured to switch at least one of said wireless communication network and said wireless communication protocol responsive to evaluating said user-defined criterion.

B15. The EIR terminal of claim B1, wherein said EIR terminal is configured to evaluate said user-defined criterion responsive to a pre-defined event.

B16. The EIR terminal of claim B1 further configured to periodically evaluate said user-defined criterion.

B17. The EIR terminal of claim B1 further configured to dynamically select at least one of a wireless communication network, a wireless communication protocol, and a parameter of a wireless communication protocol responsive to a user action.

B18. The EIR terminal of claim B1 further configured to dynamically select at least one of a wireless communication network, a wireless communication protocol, and a parameter of a wireless communication protocol responsive to scanning a pre-defined bar code.

C1. An encoded information reading terminal comprising:

a microprocessor electrically coupled to a system bus;

a memory communicatively coupled to said microprocessor;

an encoded information reading (EIR) device selected from the group consisting of a bar code reading device, an RFID reading device, and a card reading device, said EIR device configured to perform at least one of outputting raw message data containing an encoded message and outputting decoded message data corresponding to an encoded message; and

a wireless communication interface comprising an RF front end configured to perform at least one of receiving a first radio signal and transmitting a second radio signal, said RF front end electrically coupled to at least one of an analog-to-digital converter (ADC) electrically coupled to said system bus and a digital-to-analog converter (DAC) electrically coupled to said system bus;

wherein said microprocessor is configured to execute at least one of a base-band encoder software program and a base-band decoder software program;

wherein said EIR terminal is configured to dynamically select at least one of a wireless communication network, a wireless communication protocol, and a parameter of a wireless communication protocol responsive to at least one of a user action, scanning a pre-defined bar code.

C2. The EIR terminal of claim C1, wherein said base-band encoder software program is performed by at least one of a general purpose microprocessor, a specialized microprocessor.

C3. The EIR terminal of claim C1, wherein said base-band decoder software program is performed by at least one of a general purpose microprocessor, a specialized microprocessor.

C4. The EIR terminal of claim C1 further comprising a central processing unit (CPU);

wherein said base-band encoder software program is performed by at least one of said CPU, a specialized microprocessor.

C5. The EIR terminal of claim C1 further comprising a central processing unit (CPU);

wherein said base-band decoder software program is performed by at least one of said CPU, a specialized microprocessor.

D1. An encoded information reading terminal comprising:

a microprocessor electrically coupled to a system bus;

a memory communicatively coupled to said microprocessor;

an encoded information reading (EIR) device selected from the group consisting of a bar code reading device, an RFID reading device, and a card reading device, said EIR device configured to perform at least one of outputting raw message data containing an encoded message and outputting decoded message data corresponding to an encoded message; and

a wireless communication interface configured to support at least two wireless communication protocols;

wherein said EIR terminal is configured to execute a wireless communication protocol selector software program, said wireless communication protocol selector software program configured optimize a value of a user-defined criterion in order to dynamically select at least one of a wireless communication network, a wireless communication protocol, and a parameter of a wireless communication protocol.

D2. The EIR terminal of claim D1, wherein said wireless communication interface is implemented using a single multi-protocol chipset.

D3. The EIR terminal of claim D1, wherein said wireless communication interface is implemented using two or more chipsets.

D4. The EIR terminal of claim D1, wherein said value of said user-defined criterion is calculated based on at least one of network status, communication quality, signal strength, service cost, bandwidth, a user preference, and communication channel throughput.

D5. The EIR terminal of claim D1, wherein said value of said user-defined criterion is calculated as a weighted sum of components, at least one of said components represented by at least one of network status, communication quality, signal strength, service cost, bandwidth, a user preference, and communication channel throughput.

D6. The EIR terminal of claim D1, wherein said value of said user-defined criterion is calculated as a weighted sum of components, at least one of said components represented by a difference between an actual value and a desired value of at least one of network status, communication quality, signal strength, service cost, bandwidth, and communication channel throughput.

D7. The EIR terminal of claim D1, wherein said value of said user-defined criterion is calculated as a square root of a weighted sum of squares of components, at least one of said components represented by at least one of network status, communication quality, signal strength, service cost, bandwidth, a user preference, and communication channel throughput.

D8. The EIR terminal of claim D1, wherein said value of said user-defined criterion is calculated as a square root of a weighted sum of squares of components, at least one of said components represented by a difference between an actual value and a desired value of at least one of network status, communication quality, signal strength, service cost, bandwidth, a user preference, and communication channel throughput.

D9. The EIR terminal of claim D1, wherein said EIR terminal is configured to search beacon signals over a pre-defined frequency range, and then select at least one of a wireless communication network and frequency channel which optimizes said user-defined criterion.

D10. The EIR terminal of claim D1, wherein said EIR terminal is configured to evaluate said user-defined criterion before attempting to initiate a communication session.

D11. The EIR terminal of claim D1, wherein said EIR terminal is configured to switch at least one of said wireless communication network and said wireless communication protocol responsive to evaluating said user-defined criterion.

D12. The EIR terminal of claim D1, wherein said EIR terminal is configured to evaluate said user-defined criterion responsive to a pre-defined event.

D13. The EIR terminal of claim D1 further configured to periodically evaluate said user-defined criterion.

D14. The EIR terminal of claim D1 further configured to dynamically select at least one of a wireless communication network, a wireless communication protocol, and a parameter of a wireless communication protocol responsive to a user action.

D15. The EIR terminal of claim D1 further configured to dynamically select at least one of a wireless communication network, a wireless communication protocol, and a parameter of a wireless communication protocol responsive to scanning a pre-defined bar code.

E1. An encoded information reading terminal comprising:

a microprocessor electrically coupled to a system bus;

a memory communicatively coupled to said microprocessor;

an encoded information reading (EIR) device selected from the group consisting of a bar code reading device, an RFID reading device, and a card reading device, said EIR device configured to perform at least one of outputting raw message data containing an encoded message and outputting decoded message data corresponding to an encoded message; and

a wireless communication interface configured to support at least two wireless communication protocols;

wherein said EIR terminal is configured to dynamically select at least one of a wireless communication network, a wireless communication protocol, and a parameter of a wireless communication protocol responsive to at least one of a user action, scanning a pre-defined bar code.

E2. The EIR terminal of claim E1, wherein said wireless communication interface is implemented using a single multi-protocol chipset.

E3. The EIR terminal of claim E1, wherein said wireless communication interface is implemented using two or more chipsets.

We claim:

**1**. An apparatus comprising:

a microprocessor; and

a wireless communication interface configured to perform at least one of receiving a first radio signal or transmitting a second radio signal, said wireless communication interface electrically coupled to at least one of an analog-to-digital converter (ADC) or a digital-to-analog converter (DAC);

wherein said microprocessor is configured to execute at least one of a base-band encoder software program or a base-band decoder software program;

wherein said base-band encoder software program is configured to produce a first encoded bit stream by performing at least one of the following functions: source encoding of a first bit stream, encryption, channel encoding, multiplexing, modulation, frequency spreading, and media access control;

wherein said DAC is configured to output an analog signal corresponding to said first encoded bit stream;

wherein said ADC is configured to output a second encoded bit stream corresponding to an analog signal produced by said wireless communication interface; and

wherein said base-band decoder software program is configured to produce a second bit stream corresponding to said second encoded bit stream by performing at least one of the following functions: media access control, frequency de-spreading, de-modulation, de-multiplexing, channel decoding, decryption, or source decoding.

**2**. The apparatus of claim **1**, wherein said apparatus is devoid of dedicated hardware components configured to implement at least one of the following functions: source encoding of said first bit stream, encryption, channel encoding, multiplexing, modulation, frequency spreading, media access control, frequency de-spreading, de-modulation, de-multiplexing, channel decoding, decryption, or source decoding.

**3**. The apparatus of claim **1**, wherein said base-band encoder software program and said base-band decoder software program are implemented as a single software program.

**4**. The apparatus of claim **1** further comprising a wireless communication protocol selector software program, said wireless communication protocol software program configured to optimize a value of a user-defined criterion in order to dynamically select at least one of a wireless communication network, a wireless communication protocol, or a parameter of a wireless communication protocol.

**5**. The apparatus of claim **4**, wherein said value of said user-defined criterion is calculated based on at least one of network status, communication quality, signal strength, service cost, bandwidth, a user preference, or communication channel throughput.

**6**. The apparatus of claim **4**, wherein said value of said user-defined criterion is calculated as a weighted sum of components or as a square root of a weighted sum of squares of components as one of:

a weighted sum of components, at least one of said components represented by at least one of a network status, communication quality, signal strength, service cost, bandwidth, a user preference, and communication channel throughput,

as a weighted sum of components, at least one of said components represented by a difference between an actual value and a desired value of at least one of a network status, communication quality, signal strength, service cost, bandwidth, and communication channel throughput.

as a square root of a weighted sum of squares of components, at least one of said components represented by at least one of a network status, communication quality, signal strength, service cost, bandwidth, a user preference, and communication channel throughput, or

as a square root of a weighted sum of squares of components, at least one of said components represented by a difference between an actual value and a desired value of at least one of network status, communication quality, signal strength, service cost, bandwidth, a user preference, and communication channel throughput.

**7**. The apparatus of claim **4**, wherein said apparatus is configured to search beacon signals over a pre-defined frequency range, and then select at least one of a wireless communication network and frequency channel which optimizes said user-defined criterion.

**8**. The apparatus of claim **4**, wherein said apparatus is configured to evaluate said user-defined criterion before attempting to initiate a communication session.

**9**. The apparatus of claim **4**, wherein said apparatus is configured to switch at least one of said wireless communication network and said wireless communication protocol responsive to evaluating said user-defined criterion.

**10**. The apparatus of claim **4**, wherein said apparatus is configured to evaluate said user-defined criterion responsive to a pre-defined event.

**11**. The apparatus of claim **4**, wherein said apparatus is configured to periodically evaluate said user-defined criterion.

**12**. The apparatus of claim **1** further configured to dynamically select at least one of a wireless communication network, a wireless communication protocol, or a parameter of a wireless communication protocol responsive to a user action.

**13**. An apparatus comprising:

a microprocessor; and

a wireless communication interface configured to perform at least one of receiving a first radio signal or transmitting a second radio signal;

wherein said microprocessor is configured to execute at least one of a base-band encoder software program or a base-band decoder software program; and

wherein said apparatus is configured to execute a wireless communication protocol selector software program, said wireless communication protocol selector software program configured optimize a value of a user-defined criterion in order to dynamically select at least one of a wireless communication network, a wireless communication protocol, and a parameter of a wireless communication protocol.

**14**. The apparatus of claim **13**, wherein said base-band encoder software program and said base-band decoder software program are implemented as a single software program.

**15**. The apparatus of claim **13**, wherein one of

said value of said user-defined criterion is calculated based on at least one of network status, communication quality, signal strength, service cost, bandwidth, a user preference, or communication channel throughput,

said value of said user-defined criterion is calculated as a weighted sum of components, at least one of said components represented by at least one of network status, communication quality, signal strength, service cost, bandwidth, a user preference, and communication channel throughput,

said value of said user-defined criterion is calculated as a weighted sum of components, at least one of said components represented by a difference between an actual value and a desired value of at least one of network status, communication quality, signal strength, service cost, bandwidth, and communication channel throughput,

value of said user-defined criterion is calculated as a square root of a weighted sum of squares of components, at least one of said components represented by at least one of network status, communication quality, signal strength, service cost, bandwidth, a user preference, and communication channel throughput,

said value of said user-defined criterion is calculated as a square root of a weighted sum of squares of components, at least one of said components represented by a difference between an actual value and a desired value of at least one of network status, communication quality, signal strength, service cost, bandwidth, a user preference, and communication channel throughput.

**16**. The apparatus of claim **13**, wherein said apparatus is configured to search beacon signals over a pre-defined frequency range, and then select at least one of a wireless communication network and frequency channel which optimizes said user-defined criterion.

**17**. The apparatus of claim **13**, wherein said apparatus is configured to evaluate said user-defined criterion before attempting to initiate a communication session.

**18**. The apparatus of claim **13**, wherein said apparatus is configured to switch at least one of said wireless communication network or said wireless communication protocol responsive to evaluating said user-defined criterion.

**19**. The apparatus of claim **13**, wherein said apparatus is configured to periodically evaluate said user-defined criterion or evaluate said user-defined criterion responsive to a pre-defined event.

**20**. The apparatus of claim **13** further configured to dynamically select at least one of a wireless communication network, a wireless communication protocol, and a parameter of a wireless communication protocol responsive to scanning a pre-defined bar code.

* * * * *