Data-Over-Cable Interface Specifications

Radio Frequency Interface Specification

SP-RFII01-970326

INTERIM SPECIFICATION

Notice

This document was prepared by Arthur D. Little, Inc., under contract to MCNS Holdings, L.P. Neither Arthur D. Little, Inc. nor MCNS Holdings, L.P. is responsible for any liability of any nature whatsoever resulting from or arising out of use or reliance upon this specification by any party. This document is furnished on an "AS IS" basis and neither Arthur D. Little, Inc. nor MCNS Holdings, L.P., provides any representation or warranty, express or implied, regarding its accuracy, completeness, or fitness for a particular purpose. Distribution of this document is restricted pursuant to the terms of separate agreements negotiated with each of the parties to whom this document has been furnished.

© Copyright 1997 MCNS Holdings, L.P.
All rights reserved.

Document Status Sheet

cument Control Number:	SP-RFII01-970321
Reference:	Radio Frequency Interface Specification
Revision History:	D01 2/24/97 Released for MCNS/author comments D01 3/10/97 Revisions for approval D01 3/21/97 Released for publication D01 3/26/97 Re-released for publication
Date:	March 26, 1997
Status Code:	~~Work in~~ ~~Draft~~ **Interim** ~~Released~~

	~~Process~~			
Distribution Restrictions:	~~Arthur D. Little only~~	~~ADL/MCNS/ Authors~~	~~ADL/MCNS/ Vendor~~	**Public**

Key to Document Status Codes

Work in Process An incomplete document, designed to guide discussion and generate feedback, that may include several alternative requirements for consideration.

Draft A document in specification format considered largely complete, but lacking review by MCNS and vendors. Drafts are susceptible to substantial change during the review process.

Interim A document which has undergone rigorous MCNS and vendor review, suitable for use by vendors to design in conformance with, and suitable for field testing.

Released A stable document, reviewed, tested and validated, suitable to enable cross-vendor interoperability.

Contents

EXECUTIVE SUMMARY xi

1. SCOPE AND PURPOSE 1

1.1 SCOPE 1
1.2 REQUIREMENTS 1
1.3 BACKGROUND 1
1.3.1 Service Goals 1
1.3.2 Reference Architecture 2
1.3.3 Server Location 5

2. FUNCTIONAL ASSUMPTIONS 7

2.1 BROADBAND ACCESS NETWORK 7
2.2 EQUIPMENT ASSUMPTIONS 7
2.2.1 Frequency Plan 7
2.2.2 Compatibility with Other Services 7
2.2.3 Fault Isolation Impact on Other Users 8
2.3 RF CHANNEL ASSUMPTIONS 8
2.3.1 Transmission Downstream 8
2.3.2 Transmission Upstream 9
2.4 TRANSMISSION LEVELS 10
2.5 FREQUENCY INVERSION 10

3. COMMUNICATION PROTOCOLS 11

3.1 PROTOCOL STACK 11
3.1.1 CM and CMTS as Hosts 11
3.1.2 Data Forwarding Through the CM and CMTS 12
3.2 THE MAC FORWARDER 15
3.2.1 Example Rules for Data-Link-Layer Forwarding 16
3.3 NETWORK LAYER 16
3.4 ABOVE THE NETWORK LAYER 16
3.5 DATA LINK LAYER 17
3.5.1 LLC Sublayer 17
3.5.2 Link-Layer Security Sublayer 17
3.5.3 MAC Sublayer 17
3.6 PHYSICAL LAYER 18
3.6.1 Downstream Transmission Convergence Sublayer 18
3.6.2 PMD Sublayer 18

4. PHYSICAL MEDIA DEPENDENT SUBLAYER SPECIFICATION 21

4.1 SCOPE 21
4.2 UPSTREAM 21
4.2.1 Overview 21
4.2.2 Modulation Formats 22
4.2.3 FEC Encode 25
4.2.4 Scrambler (Randomizer) 25
4.2.5 Preamble Prepend 26
4.2.6 Burst Profiles 26
4.2.7 Burst Timing Convention 29
4.2.8 Transmit Power Requirements 30
4.2.9 Fidelity Requirements 31
4.2.10 Frame Structure 32
4.2.11 Signal Processing Requirements 34
4.2.12 Upstream Demodulator Input Power Characteristics 35
4.2.13 Upstream Electrical Output from the CM 36
4.3 DOWNSTREAM 36
4.3.1 Downstream Protocol 36
4.3.2 Scalable Interleaving to Support Low Latency 36
4.3.3 Downstream Frequency Plan 37
4.3.4 CMTS Output Electrical 37
4.3.5 Downstream Electrical Input to CM 38
4.3.6 CM BER Performance 38

5. DOWNSTREAM TRANSMISSION CONVERGENCE SUBLAYER 41

5.1 INTRODUCTION 41
5.2 MPEG PACKET FORMAT 41
5.3 MPEG HEADER FOR MCNS DATA-OVER-CABLE 42
5.4 MPEG PAYLOAD FOR MCNS DATA-OVER-CABLE 42
5.5 INTERACTION WITH THE MAC SUBLAYER 43
5.6 INTERACTION WITH THE PHYSICAL LAYER 44

5.7 MPEG HEADER SYNCHRONIZATION AND RECOVERY 44

6. MEDIA ACCESS CONTROL SPECIFICATION 44

6.1 INTRODUCTION 44
6.1.1 Overview 44
6.1.2 Definitions 45
6.1.3 Future Use 46
6.2 MAC FRAME FORMATS 46
6.2.1 Generic MAC Frame Format 46
6.2.2 Packet-Based MAC Frames 50
6.2.3 ATM Cell MAC Frames 51
6.2.4 Reserved PDU MAC Frames 51
6.2.5 MAC-Specific Headers 52
6.2.6 Extended MAC Headers 56
6.2.7 Error-Handling 58
6.3 MAC MANAGEMENT MESSAGES 58
6.3.1 Message Format 58
6.3.2 MAC Management Messages 60
6.4 UPSTREAM BANDWIDTH ALLOCATION 76
6.4.1 The Allocation Map MAC Management Message 77
6.4.2 Map Transmission and Timing 80
6.4.3 Protocol Example 81
6.4.4 Contention Resolution 82
6.4.5 CM Behavior 83
6.4.6 Support for Multiple Channels 83
6.4.7 Classes of Service 84
6.5 TIMING AND SYNCHRONIZATION 85
6.5.1 Global Timing Reference 85
6.5.2 CM Channel Acquisition 86
6.5.3 Ranging 86
6.5.4 Timing Units and Relationships 87
6.6 DATA LINK ENCRYPTION SUPPORT 88
6.6.1 MAC Messages 88
6.6.2 Framing 88

7. CABLE MODEM - CMTS INTERACTION 91

7.1 CMTS INITIALIZATION 91
7.2 CABLE MODEM INITIALIZATION 91
7.2.1 Scanning and Synchronization to Downstream 93
7.2.2 Obtain Upstream Parameters 93
7.2.3 Message Flows During Scanning and Upstream Parameter Acquisition 95
7.2.4 Ranging and Automatic Adjustments 96
7.2.5 Establish IP Connectivity 101
7.2.6 Establish Time of Day 101
7.2.7 Establish Security Association 102

7.2.8 Transfer Operational Parameters 102
7.2.9 Registration....102
7.2.10 Service IDs During CM Initialization....103
7.2.11 Multiple-Channel Support 104
7.2.12 Remote RF Signal Level Adjustment....104
7.2.13 Changing Upstream Burst Parameters....106
7.2.14 Changing Upstream Channels....106
7.2.15 Fault Detection and Recovery 108
7.2.16 Prevention of Unauthorized Transmissions....109

8. SUPPORTING FUTURE NEW CABLE MODEM CAPABILITIES....111

8.1 SETTING UP COMMUNICATIONS ON AN ENHANCED BASIS 111
8.1.1 Upstream Enhanced / Downstream Standard 111
8.1.2 Downstream Enhanced / Upstream Enhanced or Standard....111
8.2 DOWNLOADING CABLE MODEM OPERATING SOFTWARE....111

9. PROVISION FOR OTHER FUTURE CAPABILITIES....113

9.1 ANTICIPATED PHYSICAL-LAYER CHANGES....113
9.1.1 Adding Upstream Channel and Burst Configuration Settings....113
9.1.2 Downstream Channel Improvements....114
9.2 NEW NETWORK SERVICE REQUIREMENTS 114
9.2.1 Multicast Service IDs....114
9.2.2 RSVP Support for Upstream Traffic 115
9.3 PID FILTERING CAPABILITY 116

APPENDIX A - WELL-KNOWN ADDRESSES....117

A.1 MAC ADDRESSES 117
A.2 MAC SERVICE IDS 117
A.3 MPEG PID AND TABLE_ID....117

APPENDIX B - PARAMETERS AND CONSTANTS....119

APPENDIX C - CM CONFIGURATION INTERFACE SPECIFICATION....121

C.1 DHCP FIELDS USED BY THE CM 121
C.2 CM BINARY CONFIGURATION FILE FORMAT 121
C.3 CONFIGURATION FILE SETTINGS 122
C.4 CONFIGURATION FILE CREATION 123
C.5 CM MIC CALCULATION 124
C.6 CMTS MIC CALCULATION 125
C.6.1 Digest Calculation 125
C.7 REGISTRATION CONFIGURATION SETTINGS....125
C.8 ENCODINGS 126
C.8.1 End-of-Data Marker....126
C.8.2 Pad Configuration Setting....126
C.8.3 Downstream Frequency Configuration Setting 126
C.8.4 Upstream Channel ID Configuration Setting 127
C.8.5 Network Access Control Object 127

C.8.6 Class of Service Configuration Setting *127*
C.8.6.1 Internal Class of Service Encodings 127
C.8.7 Modem Capabilities Configuration Setting *129*
C.8.7.1 Concatenation Support *129*
C.8.8 CM Message Integrity Check (MIC) Configuration Setting *129*
C.8.9 CMTS Message Integrity Check (MIC) Configuration Setting *129*
C.8.10 Vendor ID Configuration Setting *129*
C.8.11 Software Upgrade Filename *129*
C.8.12 SNMP Write-Access Control *130*
C.8.13 SNMP MIB Object *130*
C.8.14 Vendor-Specific Information *131*
C.8.15 Modem IP Address *131*
C.8.16 Service(s) Not Available Response *131*
C.8.17 CPE Ethernet MAC Address *132*

APPENDIX D - MAC SUBLAYER SERVICE DEFINITION 135

D.1 SERVICE AT THE CM 135
D.2 MAC_CM_802_DATA.REQUEST 135
D.3 MAC_CM_DIX_DATA.REQUEST 135
D.4 MAC_CM_ATM_DATA.REQUEST 136
D.5 MAC_CM_802_DATA.INDICATION 136
D.6 MAC_CM_DIX_DATA.INDICATION 136
D.7 MAC_CM_ATM_DATA.INDICATION 137
D.8 MAC_CM_DATA.ACKNOWLEDGMENT 137

APPENDIX E -- EXAMPLE BURST PROFILES 138

E.1 INTRODUCTION 138
E.2 EXAMPLE PREAMBLE SEQUENCE 138
E.3 EXAMPLE BURST PROFILES 139

APPENDIX F - UPSTREAM MODULATION RATES 152

F.1 INTRODUCTION 152
F.2 SOURCES OF NARROWBAND INGRESS 152
F.2.1 HF Propagation *152*
F.2.2 Users of the HF Radio Spectrum *152*
F.2.3 Broadcasting *153*
F.2.4 Amateur and CB *153*
F.2.5 Other Services *154*
F.3 FITTING DATA CARRIERS WITHIN THE INGRESS GAPS 154

APPENDIX G - EXAMPLE: MULTIPLE UPSTREAM CHANNELS 159

APPENDIX H - REFERENCES 161

APPENDIX I - GLOSSARY 165

List of Figures and Tables

FIGURE 1-1. TRANSPARENT IP TRAFFIC THROUGH THE DATA-OVER-CABLE SYSTEM 2
FIGURE 1-2. DATA-OVER-CABLE REFERENCE ARCHITECTURE 3
FIGURE 1-3. SERVER LOCATION NOT AT CMTS 6
TABLE 2-1. ASSUMED DOWNSTREAM RF CHANNEL TRANSMISSION CHARACTERISTICS.....8
TABLE 2-2. ASSUMED UPSTREAM RF CHANNEL TRANSMISSION CHARACTERISTICS.....9
FIGURE 3-1. PROTOCOL STACK ON THE RF INTERFACE 11
FIGURE 3-2. DATA FORWARDING THROUGH THE CM AND CMTS 12
FIGURE 3-3. EXAMPLE CONDITION FOR NETWORK LOOPS.....13
FIGURE 3-4. MAC FORWARDER 15
TABLE 4-1. I/Q MAPPING 22
FIGURE 4-1. QPSK SYMBOL MAPPING.....23
FIGURE 4-2. 16QAM GRAY-CODED SYMBOL MAPPING.....23
TABLE 4-2. DERIVATION OF CURRENTLY TRANSMITTED SYMBOL QUADRANT 24
TABLE 4-3. MAXIMUM CHANNEL WIDTH 24
FIGURE 4-4. SCRAMBLER STRUCTURE 26
TABLE 4-4. CHANNEL BURST PARAMETERS 27
TABLE 4-5. USER UNIQUE BURST PARAMETERS.....27
FIGURE 4-5. NOMINAL BURST TIMING.....29
FIGURE 4-6. WORST-CASE BURST TIMING 30
TABLE 4-6. SPURIOUS EMISSIONS.....31
FIGURE 4-7. EXAMPLE FRAME STRUCTURES WITH FLEXIBLE BURST LENGTH MODE.....33
FIGURE 4-8. SIGNAL-PROCESSING SEQUENCE.....34
FIGURE 4-9. TDMA UPSTREAM TRANSMISSION PROCESSING 35
TABLE 4-7. MAXIMUM RANGE OF COMMANDED NOMINAL RECEIVE POWER IN EACH CARRIER.....35
TABLE 4-8. ELECTRICAL OUTPUT FROM CM.....36
TABLE 4-9. INTERLEAVER CHARACTERISTICS 36
TABLE 4-10. CMTS OUTPUT.....37
TABLE 4-11. ELECTRICAL INPUT TO CM 38
FIGURE 5-1. EXAMPLE OF INTERLEAVING MPEG PACKETS IN DOWNSTREAM 41
FIGURE 5-2. FORMAT OF AN MPEG PACKET 41
TABLE 5-1. MPEG HEADER FORMAT FOR MCNS DATA-OVER-CABLE PACKETS 42
FIGURE 5-3. PACKET FORMAT WHERE A MAC FRAME IMMEDIATELY FOLLOWS THE POINTER_FIELD 43
FIGURE 5-4. PACKET FORMAT WITH MAC FRAME PRECEDED BY STUFFING BYTES 43
FIGURE 5-5. PACKET FORMAT SHOWING MULTIPLE MAC FRAMES IN A SINGLE PACKET..43
FIGURE 5-6. PACKET FORMAT WHERE A MAC FRAME SPANS MULTIPLE PACKETS.....44
FIGURE 6-1. GENERIC MAC FRAME FORMAT.....46
FIGURE 6-2. UPSTREAM MAC/PMD CONVERGENCE 47
FIGURE 6-3. MAC HEADER FORMAT 48
TABLE 6-1. GENERIC MAC HEADER FORMAT.....48
TABLE 6-2. FC FIELD FORMAT 49
FIGURE 6-4. ETHERNET/802.3 PACKET PDU FORMAT 50
TABLE 6-3. PACKET PDU FORMAT 50
FIGURE 6-5. ATM CELL MAC FRAME FORMAT 51

TABLE 6-4. ATM CELL MAC FRAME FORMAT....51
FIGURE 6-6. RESERVED PDU FORMAT....52
TABLE 6-5. RESERVED PDU FORMAT....52
FIGURE 6-7. TIMING MAC HEADER....53
TABLE 6-6. TIMING MAC HEADER FORMAT....53
FIGURE 6-8. MANAGEMENT MAC HEADER....53
TABLE 6-7. MANAGEMENT MAC HEADER FORMAT....54
TABLE 6-8. REQUEST MAC HEADER (REQ) FORMAT....55
FIGURE 6-10. CONCATENATION OF MULTIPLE MAC FRAMES....55
FIGURE 6-11. CONCATENATION MAC HEADER FORMAT....56
TABLE 6-9. CONCATENATED MAC FRAME FORMAT....56
FIGURE 6-12. EXTENDED MAC FORMAT....57
TABLE 6-10. EXTENDED HEADER FORMAT....57
TABLE 6-11. EH ELEMENT FORMAT....57
TABLE 6-12. EH ELEMENT FORMAT....58
FIGURE 6-13. MAC HEADER AND MAC MANAGEMENT HEADER FIELDS....59
FIGURE 6-14. FORMAT OF PACKET PDU FOLLOWING THE TIMING HEADER....60
FIGURE 6-15. UPSTREAM CHANNEL DESCRIPTOR....61
TABLE 6-13. CHANNEL TLV PARAMETERS....62
FIGURE 6-16. TOP-LEVEL ENCODING FOR A BURST DESCRIPTOR....62
TABLE 6-14. UPSTREAM PHYSICAL-LAYER BURST ATTRIBUTES....63
FIGURE 6-17. EXAMPLE OF UCD ENCODED TLV DATA....64
FIGURE 6-18. MAP FORMAT....64
FIGURE 6-19. MAP INFORMATION ELEMENT STRUCTURE....65
TABLE 6-15. ALLOCATION MAP INFORMATION ELEMENTS (IE)....66
FIGURE 6-20. PACKET PDU FOLLOWING THE TIMING HEADER....66
FIGURE 6-21. RANGING RESPONSE....67
TABLE 6-16. RANGING RESPONSE MESSAGE ENCODINGS....68
FIGURE 6-22. GENERALIZED DECISION FEEDBACK EQUALIZATION COEFFICIENTS....69
FIGURE 6-23. CMTS DEMODULATOR EQUALIZER TAP LOCATION DEFINITION....70
FIGURE 6-25. REGISTRATION REQUEST....71
FIGURE 6-26. EXAMPLE OF REGISTRATION REQUEST TYPE VALUE ENCODINGS....72
FIGURE 6-27. REGISTRATION RESPONSE FORMAT....73
FIGURE 6-28. EXAMPLE OF REGISTRATION RESPONSE ENCODING....74
TABLE 6-17. SAMPLE SERVICE CLASS DATA ENCODING....75
FIGURE 6-29. UPSTREAM CHANNEL CHANGE REQUEST....75
FIGURE 6-30. UPSTREAM CHANNEL CHANGE RESPONSE....76
FIGURE 6-31. ALLOCATION MAP....77
FIGURE 6-32. PROTOCOL EXAMPLE....81
TABLE 6-18. EXAMPLE RELATING MINI-SLOTS TO TIME TICKS....87
FIGURE 6-33. SECURITY FRAMING....88
FIGURE 6-34. EXAMPLE OF SECURITY FRAMING AT THE CM....89
FIGURE 6-35. EXAMPLE OF SECURITY FRAMING AT THE CMTS....89
FIGURE 7-1. CM INITIALIZATION OVERVIEW....92
FIGURE 7-2. SDL NOTATION....93
FIGURE 7-3. OBTAINING UPSTREAM PARAMETERS....94

FIGURE 7-4. MESSAGE FLOWS DURING SCANNING AND UPSTREAM PARAMETER ACQUISITION....96
FIGURE 7-5. RANGING AND AUTOMATIC ADJUSTMENTS PROCEDURE....97
FIGURE 7-6. INITIAL RANGING - CM....98
FIGURE 7-7. INITIAL RANGING - CM (CONTINUED)....99
FIGURE 7-8. INITIAL RANGING - CMTS....100
FIGURE 7-9. ESTABLISHING IP CONNECTIVITY....101
FIGURE 7-10. ESTABLISHING TIME OF DAY....102
FIGURE 7-11. TRANSFERRING OPERATIONAL PARAMETERS AND REGISTRATION....103
FIGURE 7-12. PERIODIC RANGING - CMTS....105
FIGURE 7-13. PERIODIC RANGING - CM VIEW....106
FIGURE 7-14. CHANGING UPSTREAM CHANNELS: CMTS VIEW....107
FIGURE 7-15. CHANGING UPSTREAM CHANNELS: CM VIEW....108
TABLE 7-1. RECOVERY PROCESS ON LOSS OF SPECIFIC MAC MESSAGES....109
TABLE 9-1. CHANNEL BURST PARAMETERS FOR ADVANCED MODEMS....114
TABLE E-1. EXAMPLE CHANNEL BURST PARAMETER VALUES FOR QPSK OPERATION AT 160, 320, AND 640 KSYM/SEC....139
TABLE E-2. EXAMPLE CHANNEL BURST PARAMETER VALUES FOR QPSK OPERATION AT 1.28 AND 2.56 MSYM/SEC....141
TABLE E-3. EXAMPLE CHANNEL BURST PARAMETER VALUES FOR 16QAM OPERATION AT 160, 320, AND 640 KSYM/SEC....142
TABLE E-4. EXAMPLE CHANNEL BURST PARAMETER VALUES FOR 16QAM OPERATION AT 1.28 AND 2.56 MSYM/SEC....143
TABLE E-5. EXAMPLE CHANNEL BURST PARAMETER VALUES FOR POWER-UP AND ACQUISITION IN A NEW CHANNEL....144
TABLE E-6. FRAME FORMAT EXAMPLES WITH QPSK OPERATION....145
TABLE E-6. (CONTINUED) FRAME FORMAT EXAMPLES WITH QPSK OPERATION....146
TABLE E-6. (CONTINUED) FRAME FORMAT EXAMPLES WITH QPSK OPERATION....147
TABLE E-7. FRAME FORMAT EXAMPLES WITH 16QAM OPERATION....148
TABLE E-7. FRAME FORMAT EXAMPLES WITH 16QAM OPERATION (CONTINUED)....149
TABLE E-7. (CONTINUED) FRAME FORMAT EXAMPLES WITH 16QAM OPERATION....150
TABLE F-1. BROADCASTING ALLOCATIONS BETWEEN 5 AND 42 MHZ....153
TABLE F-2. AMATEUR AND CITIZENS BAND ALLOCATIONS BETWEEN 5 AND 42 MHZ....154
TABLE F-3. DATA CARRIERS IN THE GAPS BETWEEN BROADCASTING BANDS....155
TABLE F-4. DATA CARRIERS IN THE GAPS BETWEEN BROADCASTING, AMATEUR AND CB BANDS....156
FIGURE G-1. ONE DOWNSTREAM AND 4 UPSTREAM CHANNELS....159

This page intentionally left blank.

Executive Summary

High-speed data communications over cable systems are now being offered on selected cable systems using first-generation hardware from several manufacturers. These early experiences reveal two important facts: 1) the technology works very well, and 2) customers are surprised and delighted by the high speed and the convenience of connectionless service. While it is possible to continue rolling out data communication services using the proprietary and non-interoperable technology offerings of current vendors, the timely availability of a widely adopted industry specification for interoperability will provide powerful advantages for cable operators, consumers, and manufacturers. These advantages include the following:

- Operators may purchase equipment from multiple manufacturers, thus promoting competition and subsequent price reductions that benefit both the operator and consumer.
- Interoperable product enables operators to purchase equipment from multiple manufacturers without significantly impacting operation and maintenance costs.
- The interoperability specification provides a basic transport scheme that will allow early modems developed to the specification to continue to work on cable systems even though more advanced service capabilities may be added to future modems. As a result, investment in the early interoperable modems will not be lost when more advanced modems are brought to the marketplace.
- Cable modems that will work on a data-enabled cable system may be purchased by the consumer from a retail outlet.
- Economies-of-scale advantages will be realized for key components of the cable modem system.
- Manufacturers can reduce risk by developing to a well-known specification.

This interim specification defines the radio-frequency interface and is part of the set of data-over-cable interface specification documents being developed by the Data-Over-Cable Service Interface Specification working group.

Multimedia Cable Network System (MCNS), along with Continental Cablevision, Inc., Rogers Cablesystems Limited, and Cable Television Laboratories, Inc. (on behalf of the CableLabs member companies), make up the Data-Over-Cable Service Interface Specification working group. MCNS is comprised of Comcast Cable Communications, Inc., Cox Communications, Tele-Communications, Inc., and Time Warner Cable.

Goals of the Specification

The data-over-cable service interface documents describe the internal and external network interfaces for a system that allows transparent bi-directional transfer of Internet Protocol (IP) traffic, between the cable system headend and the customer premises, over a cable television system.

Because low risk and rapid time-to-market were critical drivers, this specification development effort incorporated contributions from manufacturers that were based on working product. Care was taken to ensure that the technology choices meet the market needs for the first three to five years of service. In addition, because the technology is evolving,

"hooks" were incorporated to facilitate the introduction of new technology as it becomes available. However, it should be noted that it was not a goal of this specification to incur excessive risk or delays by pushing the limits of technology and performance. Instead, this specification development effort involved a deliberate series of prudent tradeoffs. The selection criteria that were used are listed below in order of importance.

1. Meets basic performance, feature, and cost needs for the first three to five years of service. These requirements require Internet Protocol transparency and support for multiple grades of service.
2. Minimizes intellectual property issues and cost, thereby facilitating manufacture of compatible equipment by multiple vendors on a non-discriminatory and royalty-free basis.
3. Technology has been implemented and tested. Timely availability of prototypes for testing and volume field deployable equipment was considered in all technology choices. The desired schedule is to have hardware conforming to this specification available from at least one vendor as early as possible in 1997, and from multiple manufacturers by year-end 1997.
4. Support for the evolutionary aspects of the architecture. The protocols are layered so as to be
   decoupled and include the ability to support future upgrades and changes by negotiation of the physical- and higher-layer protocols at session establishment.
5. Provides technology-based performance or feature benefits. Support is provided for additional vendor-specific features that add value.

Specification Overview

Figure i depicts a high-level block diagram of the data-over-cable system. The system consists of the Cable Modem Termination System (CMTS), cable network, and Cable Modems (CMs). The CMTS is located at the headend and the CMs are located at customer premises. This document defines both the characteristics of the radio frequency interface on the cable system and the message sets and signaling sequences between the CMTS and CM that are necessary to achieve interoperability.

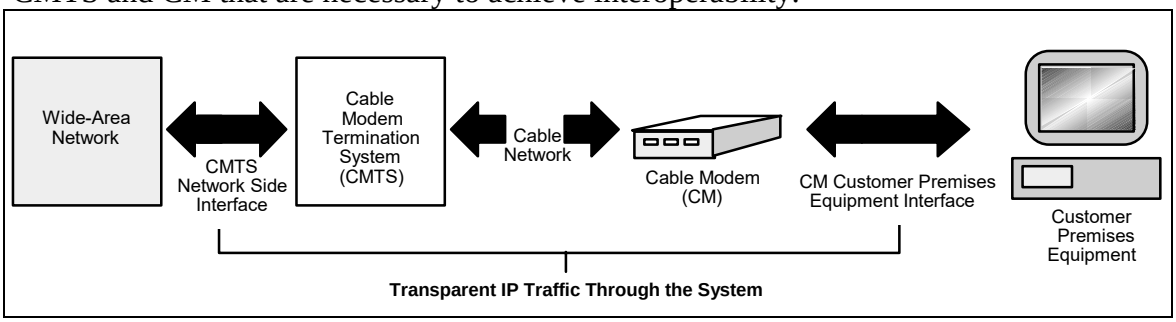

Figure i. Data-Over-Cable System Block Diagram

To enable transparent transfer of Internet Protocol messages across a cable system, the Network Layer, Data Link Layer, and Physical Layer protocols and sublayers are defined. These are briefly summarized below.

The Network Layer is IP.

The Data Link Layer is comprised of three sublayers:

1. A Logical Link Control (LLC) Sublayer, which conforms to Ethernet standards.

2. A link-security sublayer that supports the basic needs of privacy, authorization, and authentication.

- A Media Access Control (MAC) Sublayer, suitable for cable system operation, that supports variable-length protocol data units (PDUs). The main features of the Media Access Control protocol defined in this document are:

    a) CMTS-controlled mix of contention and reservation transmission opportunities
    b) A stream of mini-slots in the upstream
    c) Bandwidth efficiency through support of variable-length packets
    d) Extensions provided for future support of Asynchronous Transfer Mode (ATM) or other PDUs
    e) Support for multiple grades of service
    f) Support for a wide range of data rates.

The Physical (PHY) layer is comprised of two sublayers:

1. A Transmission Convergence Sublayer (present only in the downstream direction).
2. A Physical Media Dependent (PMD) Sublayer.

The Transmission Convergence sublayer conforms to MPEG-2 (i.e., ITU-T Recommendation H.222.0).

The PMD sublayer in the downstream direction is based on North American digital video transmission specifications (i.e., ITU-T Recommendation J.83 Annex B with the exceptions called out in section 0) and includes these features:

- 64-level and 256-level Quadrature Amplitude Modulation (64QAM and 256QAM) modulation formats
- Concatenation of Reed-Solomon and Trellis forward error-correcting codes supports operation in a higher percentage of North American cable networks
- Variable depth interleaving supports both latency-sensitive and latency-insensitive data.

In the upstream direction, the features of the PMD sublayer are as follows:

- Quadrature Phase Shift Keying (QPSK) and 16QAM modulation formats
- Multiple symbol rates
- Flexible and programmable CM under control of the CMTS
- Frequency agility
- Time-division multiple access
- Support of both fixed-frame and variable-length PDU formats
- Programmable Reed-Solomon block coding
- Programmable preambles

- Minimal coupling between physical and higher layers accommodates future physical -layer
  technologies.

The specification identifies means by which CMs can self-discover the appropriate cable system frequencies for reception and transmission, bit rates, modulation formats, error correction, and power levels. In order to protect service to other users, CMs are not allowed to transmit except under defined conditions. One or more channels in both the upstream and downstream direction can be provisioned to support scaling over a wide range of cable system topologies, service penetrations levels, and traffic loading.

Support of Future New Cable Modem Capabilities

In the future, new types of CMs and CMTSs with enhanced capabilities may be introduced that cannot adequately be defined today. These capabilities may include new physical-layer modulation encoding; improvements to, or new configuration settings within, the defined physical-layer encoding; and differing traffic flows and classes of service. Future-proofing is provided, in the protocols described herein, to permit new types of CMs and CMTSs to set up communication on an enhanced basis. In addition, means are provided to download new software to CMs over the cable network.

This page intentionally left blank.

Radio Frequency Interface Specification

1. Scope and Purpose

1.1 Scope

This Interim Specification defines the radio-frequency interface specifications for high-speed data-over-cable systems that are being developed by the Multimedia Cable Network System (MCNS) consortium. It is being issued to facilitate design and field testing leading to the early manufacturability and interoperability of conforming hardware by multiple vendors.

1.2 Requirements

Throughout this document, the words that are used to define the significance of particular requirements are capitalized. These words are:

"MUST" This word or the adjective "REQUIRED" means that the item is an absolute requirement of this specification.

"MUST NOT" This phrase means that the item is an absolute prohibition of this specification.

"SHOULD" This word or the adjective "RECOMMENDED" means that there may exist valid reasons in particular circumstances to ignore this item, but the full implications should be understood and the case carefully weighed before choosing a different course.

"SHOULD NOT" This phrase means that there may exist valid reasons in particular circumstances when the listed behavior is acceptable or even useful, but the full implications should be understood and the case carefully weighed before implementing any behavior described with this label.

"MAY" This word or the adjective "OPTIONAL" means that this item is truly optional. One vendor may choose to include the item because a particular marketplace requires it or because it enhances the product, for example; another vendor may omit the same item.

Other text is descriptive or explanatory.

1.3 Background

1.3.1 Service Goals

Cable operators are interested in deploying high-speed data communications systems on cable television systems. Comcast Cable Communications, Inc., Cox Communications, Tele-Communications, Inc., Time Warner Cable, Continental Cablevision, Inc., Rogers Cablesystems Limited, and Cable Television Laboratories, Inc. (on behalf of the CableLabs member companies), have decided to prepare a series of interface specifications that will permit the early definition, design, development and deployment of data-over-cable

systems on an uniform, consistent, open, non-proprietary, multi-vendor interoperable basis.

The intended service will allow transparent bi-directional transfer of Internet Protocol (IP) traffic, between the cable system headend and customer locations, over an all-coaxial or hybrid-fiber/coax (HFC) cable network. This is shown in simplified form in Figure 1-1.

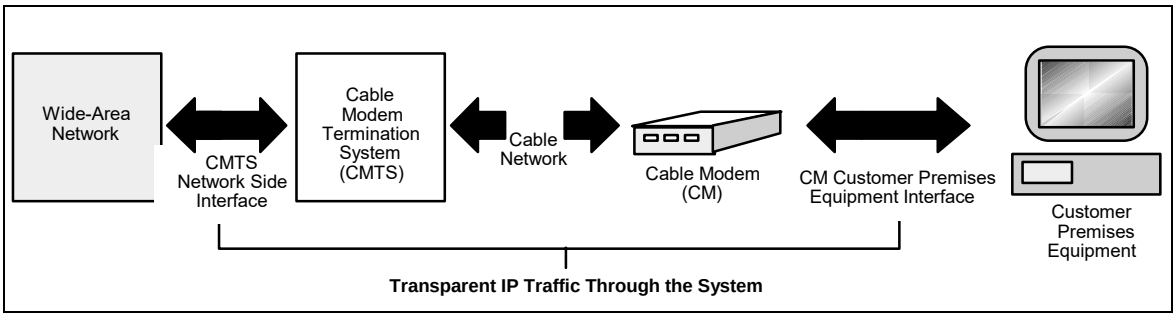

Figure 0-1. Transparent IP Traffic Through the Data-Over-Cable System

The transmission path over the cable system is realized at the headend by a Cable Modem Termination System (CMTS), and at each customer location by a Cable Modem (CM). At the headend (or hub), the interface to the data-over-cable system is called the Cable Modem Termination System - Network-Side Interface (CMTS-NSI) and is specified in [MCNS3]. At the customer locations, the interface is called the cable-modem-to-customer-premises-equipment interface (CMCI) and is specified in [MCNS4]. The intent is for the MCNS operators to transparently transfer IP traffic between these interfaces, including but not limited to datagrams, DHCP, ICMP, and IP Group addressing (broadcast and multicast).

1.3.2 Reference Architecture

The reference architecture for the data-over-cable services and interfaces is shown in Figure 0-2.

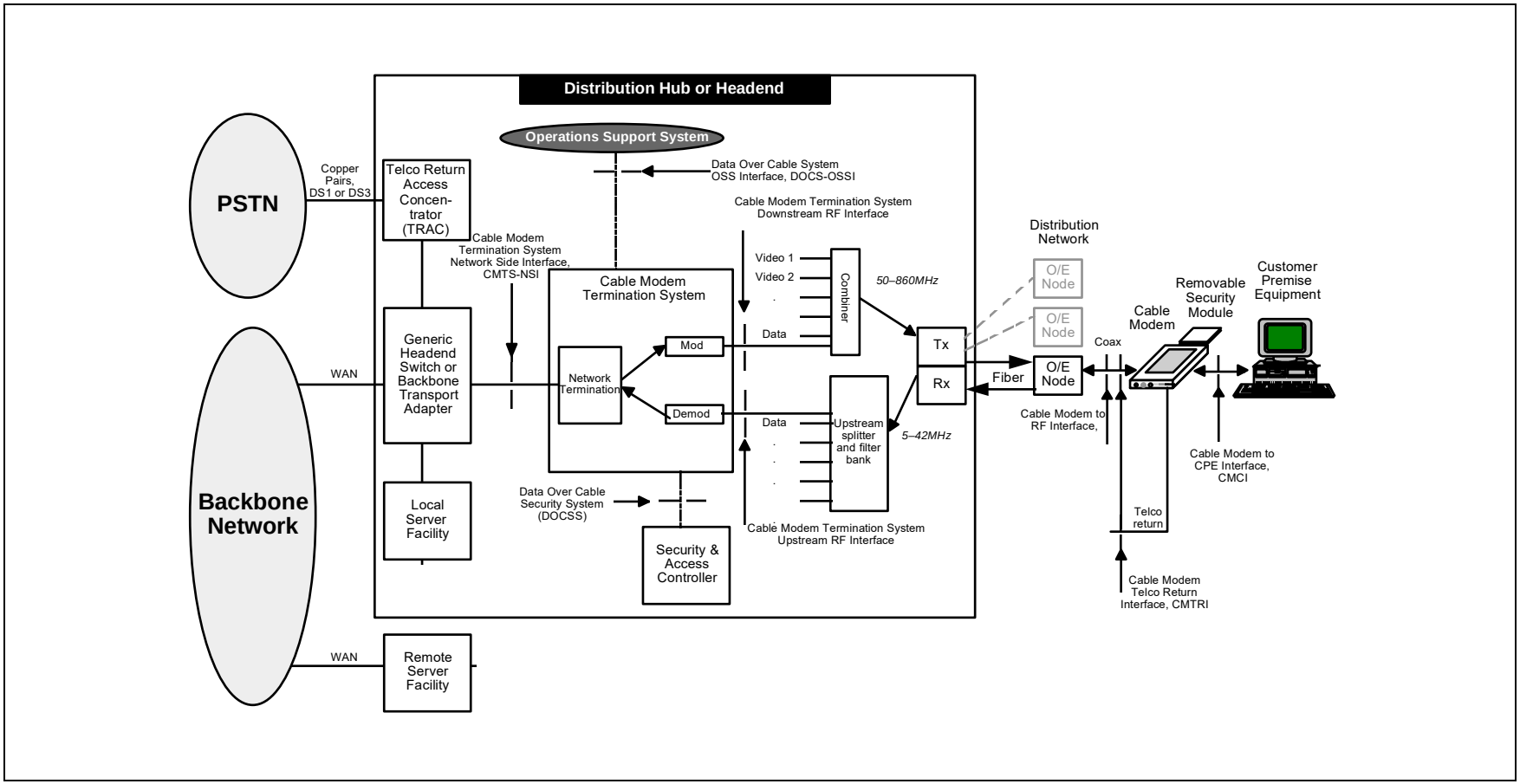

Figure 0-2. Data-over-Cable Reference Architecture

1.3.2.1 Categories of Interface Specification

The basic reference architecture of Figure 0-2 involves three categories of interface. These are being developed in phases.

a. Phase 1

Data Interfaces - These are the CMCI [MCNS4] and CMTS-NSI [MCNS3], corresponding respectively to the cable-modem-to-customer-premises-equipment (CPE) interface (for example, between the customer's computer and the cable modem), and the cable modem termination system network-side interface between the cable modem termination system and the data network.

b. Phase 2

Operations Support Systems Interfaces - These are network element management layer interfaces between the network elements and the high-level OSSs (operations support systems) which support the basic business processes, and are documented in [MCNS5].

Telephone Return Interface - CMTRI - This is the interface between the cable modem and a telephone return path, for use in cases where the return path is not provided or not available via the cable network, and is documented in [MCNS6].

c. Phase 3

RF Interfaces - The RF interfaces defined in this document are the following:

- Between the cable modem and the cable network.
- Between the CMTS and the cable network, in the downstream direction (traffic toward the customer)
- Between the CMTS and the cable network, in the upstream direction (traffic from the customer).

Security requirements -

- The Data Over Cable Security System (DOCSS) is defined in [MCNS2].
- The CM Removable Security Module (RSM) is defined in [MCNS7].
- Baseline data-over-cable security is defined in [MCNS8].

1.3.2.2 Data-Over-Cable Interface Documents

A list of the documents in the Data-Over-Cable Interface Specifications family is provided below. For updates, please refer to URL http://www.cablemodem.com.

Designation	Title
SP-CMCI	Cable Modem to Customer Premises Equipment Interface Specification
SP-CMTS-NSI	Cable Modem Termination System Network Side Interface Specification
SP-CMTRI	Cable Modem Telco Return Interface Specification
SP-OSSI	Operations Support System Interface Specification
SP-RFI	Radio Frequency Interface Specification
SP-DOCSS	Data Over Cable Security System (DOCSS) Specification
SP-RSM	Removable Security Module Specification
SP-BDS	Baseline Data Over Cable Security Specification

Key to Designations:

SP Specification

TR Technical Report (provides a context for understanding and applying the specification -- documents of this type may be issued in the future.)

1.3.3 Server Location

This document refers to several servers which are central to the system operation (e.g., provision and security servers).

The message sequence charts used as examples within this document show sample message exchanges in which access to the servers is via the CMTS. It is important to note that access to these servers need not necessarily be via the CMTS, but MAY be via any CM suitably configured. In this case, the scenarios become slightly more complex, as the message flows are as shown in Figure 0-3. Allowing placement of these components to be at locations other than the CMTS allows the system operator the maximum flexibility in server placement and network configuration. Note that the CMTS MUST be able to initialize without access to the servers in this configuration.

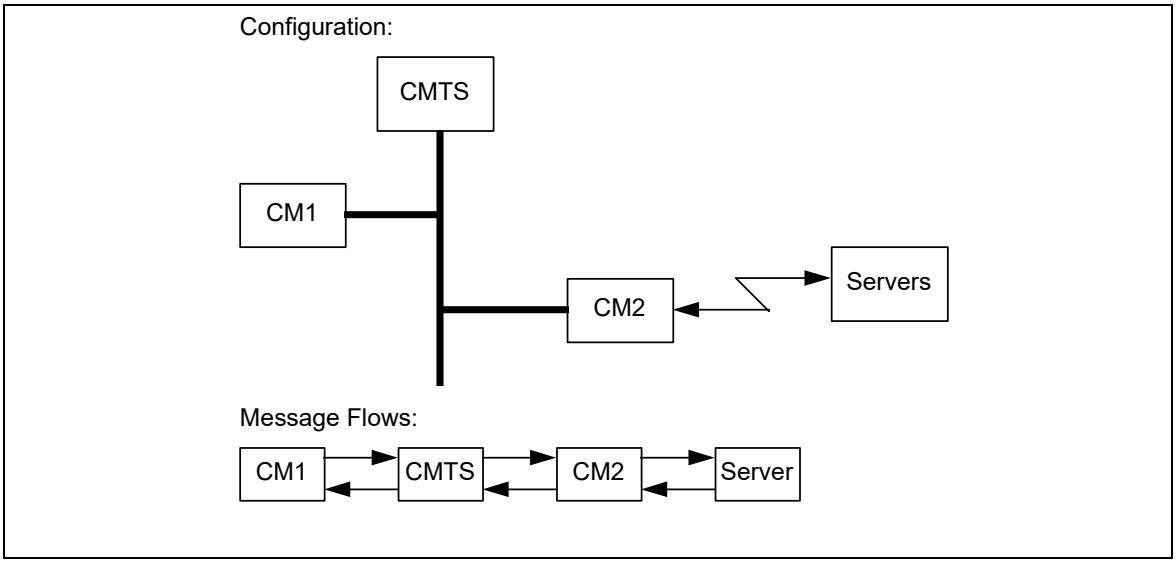

Figure 0-3. Server Location Not At CMTS

2.

Functional Assumptions

This section describes the characteristics of cable television plant to be assumed for the purposes of operation of the data-over-cable system. It is not a description of CMTS or CM parameters. The data-over-cable system MUST operate satisfactorily in the environment described in this section.

2.1 Broadband Access Network

A coaxial-based broadband access network is assumed. This may take the form of either an all-coax or hybrid-fiber/coax (HFC) network. The generic term “cable network” is used here to cover all cases.

A cable network uses a shared-medium, tree-and-branch architecture with analog transmission. The key functional characteristics assumed in this document are the following:

- Two-way transmission.
- A maximum optical/electrical spacing between the CMTS and the most distant customer terminal of 100 miles, although typical maximum separation may be 10-15 miles.
- A maximum differential optical/electrical spacing between the CMTS and the closest and most distant modems of 100 miles, although this would typically be limited to 15 miles.

2.2 Equipment Assumptions

2.2.1 Frequency Plan

In the downstream direction, the cable system is assumed to have a passband with a lower edge at 50 or 54 MHz and an upper edge which is implementation-dependent but is typically in the range of 300 to 860 MHz. Within that passband, NTSC analog television signals in 6-MHz channels are assumed to be present on the standard, HRC or IRC frequency plans of EIA Interim Standard IS-6, as well as other narrowband and wideband digital signals.

In the upstream direction, the cable system may have a subsplit (5-30 MHz) or extended subsplit (5-42 MHz) passband. NTSC analog television signals in 6-MHz channels may be present, as well as other signals.

2.2.2 Compatibility with Other Services

The CM and CMTS MUST coexist with the other services on the cable network. In particular,

a) they MUST operate satisfactorily in cable spectrum assigned for CMTS-CM interoperation while the balance of the cable spectrum is occupied by any combination of television and other signals; and

b) they MUST NOT cause harmful interference to any other services that are assigned to the cable network in spectrum outside of that allocated to the CMTS.

2.2.3 Fault Isolation Impact on Other Users

As the data-over-cable system is a shared-media, point-to-multipoint system, fault-isolation procedures MUST take into account the potential harmful impact of faults and fault-isolation procedures on numerous users of the data-over-cable and other services.

2.3 RF Channel Assumptions

The data-over-cable system, configured with at least one set of defined physical-layer parameters (e.g., modulation, forward error correction, symbol rate, etc.) from the range of configuration settings described in this specification, must be capable of operating with a 1500-byte packet loss rate of less than one percent while forwarding at least 100 packets per second on cable networks having characteristics defined in Section 0.

2.3.1 Transmission Downstream

The RF channel transmission characteristics of the cable network in the downstream direction assumed for the purposes of minimal operating capability are described in Table 0-1. This assumes nominal analog video carrier level (peak envelope power) in a 6-MHz channel bandwidth. All conditions are present concurrently.

Table 0-1. Assumed Downstream RF Channel Transmission Characteristics

Parameter	Value
Frequency range	Cable system normal downstream operating range is from 50 MHz to as high as 860 MHz. However, the values in this table apply only at frequencies >= 88 MHz.
RF channel spacing (design bandwidth)	6 MHz
Transit delay from the headend to the most distant customer	<= 0.800 msec (typically much less)
Carrier-to-noise ratio in a 6-MHz band (analog video level)	Not less than 35 dB (Note 4)
Carrier-to-interference ratio for total power (discrete and broadband ingress signals)	Not less than 35 dB within the design bandwidth
Composite triple beat distortion for analog modulated carriers	Not greater than -50 dBc within the design bandwidth
Composite second order distortion for analog modulated carriers	Not greater than -50 dBc within the design bandwidth
Cross-modulation level	Not greater than -40 dBc within the design bandwidth
Amplitude ripple	0.5 dB within the design bandwidth
Group delay ripple in the spectrum occupied by the CMTS	75 ns within the design bandwidth
Micro-reflections bound for dominant echo	-10 dBc @ <= 0.5 μsec, -15 dBc @ <= 1.0 μsec -20 dBc @ <= 1.5 μsec, -30 dBc @ > 1.5 μsec
Carrier hum modulation	Not greater than -26 dBc (5%)
Burst noise	Not longer than 25 μsec at a 10 Hz average rate
Seasonal and diurnal signal level variation	8 dB
Signal level slope, 50-750 MHz	16 dB
Maximum analog video carrier level at the CM input, inclusive of above signal level variation	17 dBmV

Lowest analog video carrier level at the CM input, inclusive of above signal level variation	-5 dBmV

Notes to Table 0-1:

1. Transmission is from the headend combiner to the CM input at the customer location.

2. For measurements above the normal downstream operating frequency band (except hum), impairments are referenced to the highest-frequency NTSC carrier level.

3. For hum measurements above the normal downstream operating frequency band, a continuous-wave carrier is sent at the test frequency at the same level as the highest-frequency NTSC carrier.

4. This presumes that the digital carrier is operated at analog peak carrier level. When the digital carrier is operated below the analog peak carrier level, this C/N may be less.

5. Measurement methods defined in [NCTA] or [CableLabs2].

2.3.2 Transmission Upstream

The RF channel transmission characteristics of the cable network in the upstream direction assumed for the purposes of minimal operating capability are described in Table 0-2. All conditions are present concurrently.

Table 0-2. Assumed Upstream RF Channel Transmission Characteristics

Parameter	Value
Frequency range	5 to 42 MHz edge to edge
Transit delay from the most distant CM to the nearest CM or CMTS	<= 0.800 msec (typically much less)
Carrier-to-noise ratio	Not less than 25 dB
Carrier-to-ingress power (the sum of discrete and broadband ingress signals) ratio	Not less than 25 dB (Note 2)
Carrier- to-interference (the sum of noise, distortion, common-path distortion and cross-modulation) ratio	Not less than 25 dB
Carrier hum modulation	Not greater than -23 dBc (7.0 %)
Burst noise	Not longer than 10 μsec at a 1 kHz average rate for most cases (Notes 3, 4 and 5)
Amplitude ripple	5-42 MHz: 0.5 dB/MHz
Group delay ripple	5-42 MHz: 200 ns/MHz
Micro-reflections -- single echo	-10 dBc @ <= 0.5 μsec -20 dBc @ <= 1.0 μsec -30 dBc @ > 1.0 μsec
Seasonal and diurnal signal level variation	Not greater than 8 dB min to max

Notes to Table 0-2:

1. Transmission is from the CM output at the customer location to the headend.

2. Ingress avoidance or tolerance techniques MAY be used to ensure operation in the presence of time-varying discrete ingress signals that could be as high as 0 dBc [CableLabs1].

3. Amplitude and frequency characteristics sufficiently strong to partially or wholly mask the data carrier.

4. CableLabs report containing distribution of return-path burst noise measurements and measurement method is forthcoming.

5. Impulse noise levels more prevalent at lower frequencies (< 15 MHz).

2.3.2.1 Availability

Typical cable network availability is considerably greater than 99 %.

2.4 Transmission Levels

The nominal power level of the downstream CMTS 64QAM signal(s) within a 6-MHz channel is targeted to be in the range -10 dBc to -6 dBc relative to analog video carrier level and will normally not exceed analog video carrier level. The nominal power level of the upstream CM signal(s) will be as low as possible to achieve the required margin above noise and interference. Uniform power loading per unit bandwidth is commonly followed in setting upstream signal levels, with specific levels established by the cable network operator to achieve the required carrier-to-noise and carrier-to-interference ratios.

2.5 Frequency Inversion

There will be no frequency inversion in the transmission path in either the downstream or upstream directions, i.e., a positive change in frequency at the input to the cable network will result in a positive change in frequency at the output.

3. Communication Protocols

This section provides a high-level overview of the communication protocols that MUST be used in the data-over-cable system. Detailed specifications for the physical media dependent, downstream transmission, and media access control sublayers are provided in Sections 0, 0, and 0, respectively.

3.1 Protocol Stack

The CM and CMTS operate as forwarding agents and also as end-systems (hosts). The protocol stacks used in these modes differ as shown below.
The principal function of the cable modem system is to transmit Internet Protocol (IP) packets transparently between the headend and the subscriber location. Certain management functions also ride on IP, so that the protocol stack on the cable network is as shown in Figure 0-1 (this does not restrict the generality of IP transparency between the headend and the customer). These management functions include, for example, supporting spectrum management functions and the downloading of software.

3.1.1 CM and CMTS as Hosts

CMs and CMTSs will operate as IP and LLC hosts in terms of IEEE Standard 802 [IEEE802] for communication over the cable network. The protocol stack at the CM and CMTS RF interfaces is shown in Figure 0-1.

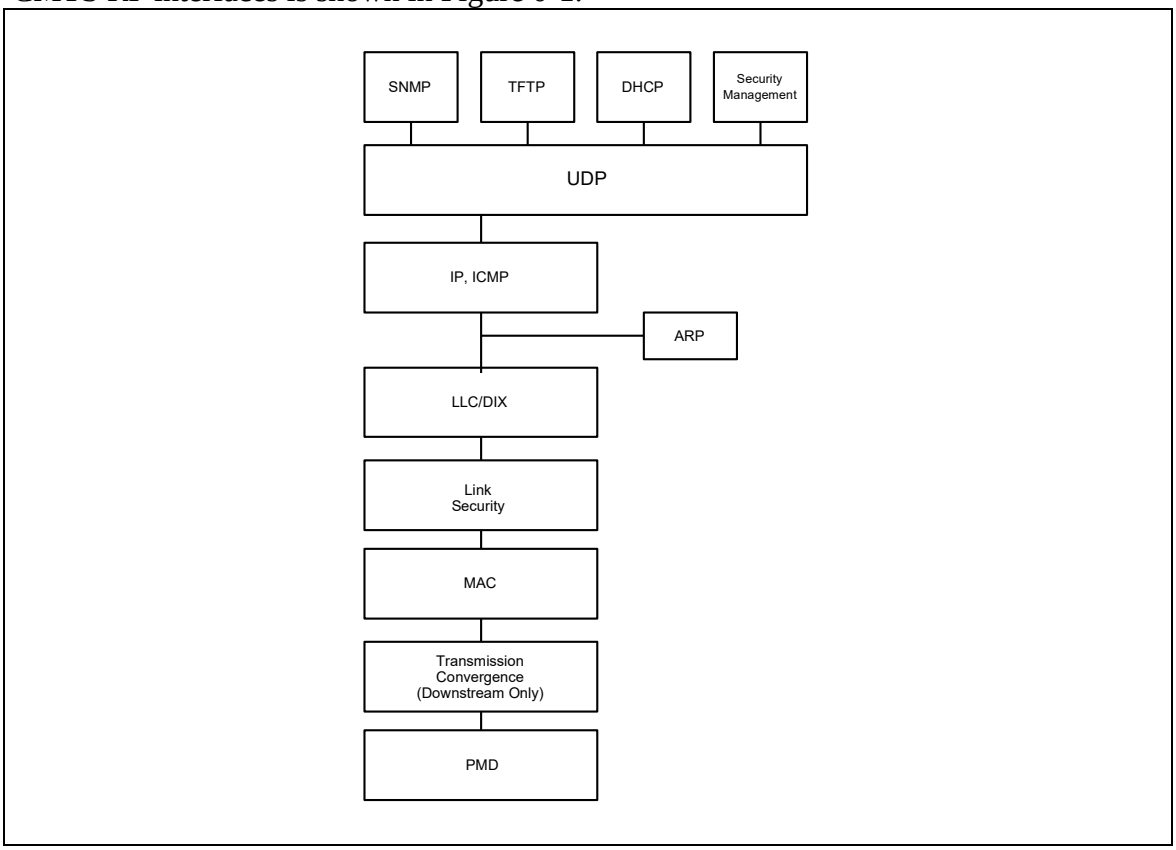

Figure 0-1. Protocol Stack on the RF Interface

The CM and CMTS MUST function as IP hosts. As such, the CM and CMTS MUST support IP and ARP over DIX link-layer framing (see [DIX]). The CM and CMTS MAY also support IP and ARP over SNAP framing [RFC-1042].
The CM and CMTS also MUST function as LLC hosts. As such, the CM and CMTS MUST respond appropriately to TEST and XID requests per [ISO8802-2].

3.1.2 Data Forwarding Through the CM and CMTS

3.1.2.1 General

Data forwarding through the CMTS MAY be transparent bridging, or MAY employ network-layer forwarding (routing, IP switching) as shown in Figure 0-2.
Data forwarding through the CM is link-layer transparent bridging, as shown in Figure 0-2. Forwarding rules are similar to [ISO/IEC10038] with the modifications described in Sections 0 and 0. This allows the support of multiple network layers.

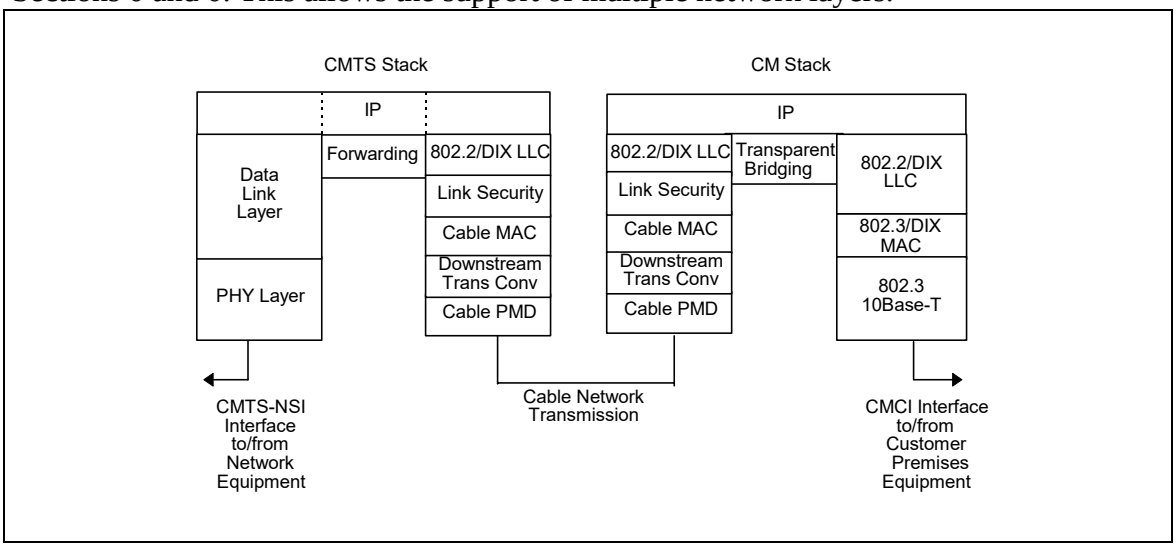

Figure 0-2. Data Forwarding Through the CM and CMTS

Forwarding of IP traffic MUST be supported. Support of other network layer protocols is OPTIONAL. The ability to restrict the network layer to a single protocol such as IP is REQUIRED.
Support for the 802.1d spanning tree protocol of [ISO/IEC10038] with the modifications described in Section 0 is OPTIONAL for CMs intended for residential use. CMs intended for commercial use and bridging CMTSs MUST support this version of spanning tree. CMs and CMTSs MUST include the ability to filter (and disregard) 802.1d BPDUs.

This specification assumes that CMs intended for residential use will not be connected in a configuration which would create network loops such as that shown in Figure 0-3.

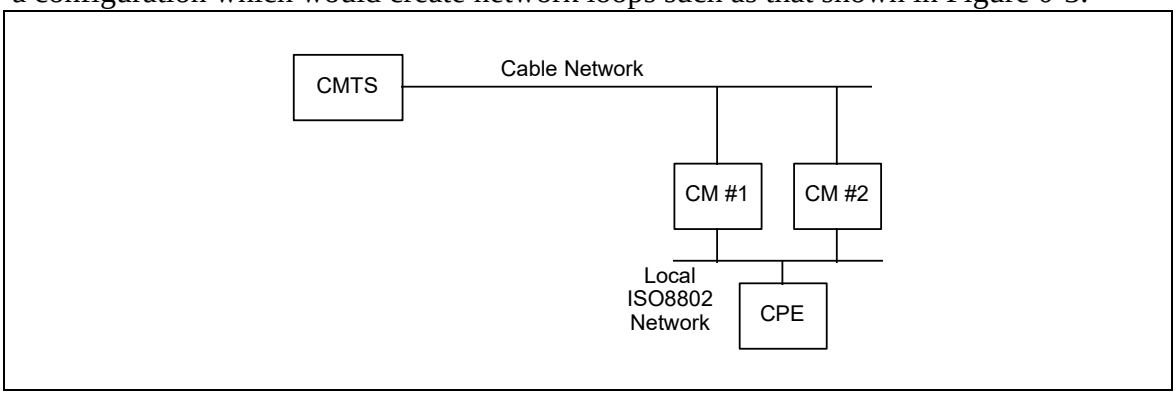

Figure 0-3. Example Condition for Network Loops

3.1.2.2 CMTS Forwarding Rules

At the CMTS, if link-layer forwarding is used, then it MUST conform to the following general 802.1d guidelines:

- Link-layer frames between a given pair of end-stations MUST be delivered in order.
- Link-layer frames MUST NOT be duplicated.
- Stale frames (those that cannot be delivered in a timely fashion) MUST be discarded.

The address-learning and -aging mechanisms used are vendor-dependent.
If network-layer forwarding is used, then the CMTS should conform to IETF Router Requirements [RFC-1812] with respect to its CMTS-RFI and CMTS-NSI interfaces.
Conceptually, the CMTS forwards data packets at two abstract interfaces: between the CMTS-RFI and the CMTS-NSI, and between the upstream and downstream channels.
The CMTS MAY use any combination of link-layer (bridging) and network-layer (routing) semantics at each of these interfaces. The methods used at the two interfaces need not be the same.
Forwarding between the upstream and downstream channels within a MAC layer differs from traditional LAN forwarding in that:

- A single channel is simplex, and cannot be considered a complete interface for most protocol (e.g., 802.1d spanning tree, Routing Information Protocol per [RFC-1058]) purposes.
- Upstream channels are essentially point-to-point, whereas downstream channels are shared-media.
- As a public network, policy decisions may override full connectivity.

For these reasons, an abstract entity called the MAC Forwarder exists within the CMTS to provide connectivity between stations within a MAC domain (see Section 0).

3.1.2.3 CM Forwarding Rules

Data forwarding through the CM is link-layer bridging with the following specific rules.

3.1.2.3.1 Address Learning

- The CM MUST acquire Ethernet MAC addresses of connected CPE devices, either from the provisioning process or from learning, until the CM acquires its maximum number of CPE addresses (a device-dependent value). Once the CM acquires its maximum number of CPE addresses, then newly discovered CPE addresses MUST NOT replace previously acquired addresses. The CM must support acquisition of at least one CPE address.
- The CM MUST allow configuration of CPE addresses during the provisioning process (up to its maximum number of CPE addresses) to support configurations in which learning is not practical nor desired.
- Addresses provided during the CM provisioning MUST take preference over learned addresses.
- CPE addresses MUST NOT be aged out.
- On a CM reset (e.g., a power cycle), all learned and provisioned addresses MUST be discarded (they are not retained in non-volatile storage, to allow modification of user MAC addresses or movement of the CM). However, a CM MAY retain any provisioned addresses over a reset.

3.1.2.3.2 Forwarding

CM forwarding in both directions MUST conform to the following general 802.1d guidelines:

- Link-layer frames between a given pair of end-stations MUST be delivered in order.
- Link-layer frames MUST NOT be duplicated.
- Stale frames (those that cannot be delivered in a timely fashion) MUST be discarded.

Cable-Network-to-Ethernet forwarding MUST follow the following specific rules:

- Frames addressed to unknown destinations MUST NOT be forwarded from the cable port to the Ethernet port.
- Broadcast frames MUST be forwarded to the Ethernet port.
- Multicast frames MUST be forwarded to the Ethernet ports in accordance with filtering configuration settings specified by the cable operator’s operations and business support systems.

Ethernet-to-Cable-Network forwarding MUST follow the following specific rules:

- Frames addressed to unknown destinations MUST be forwarded from the Ethernet port to the cable port.
- Broadcast frames MUST be forwarded to the cable port.
- Multicast frames MUST be forwarded to the cable port in accordance with filtering configuration settings specified by the cable operator’s operations and business support systems.

- Frames from source addresses other than those provisioned or learned as supported CPE devices MUST NOT be forwarded.
- If a single-user CM has learned a supported address, it MUST NOT forward data from a second source. Other (non-supported) CPE source addresses MUST be learned from the Ethernet port and this information used to filter local traffic as in a traditional learning bridge.
- If a single-user CM has learned A as its supported CPE device and learned B as a second device connected to the Ethernet port, it MUST filter any traffic from A to B.

3.2 The MAC Forwarder

The MAC Forwarder is a MAC sublayer that resides on the CMTS just below the MAC service access point (MSAP) interface, as shown in Figure 0-4. It is responsible for delivering upstream frames to

- One or more downstream channels
- The MSAP interface.

In Figure 0-4, the LLC sublayer and link security sublayers of the upstream and downstream channels on the cable network terminate at the MAC Forwarder.
The MSAP interface user MAY be the NSI-RFI Forwarding process or the CMTS's host protocol stack.

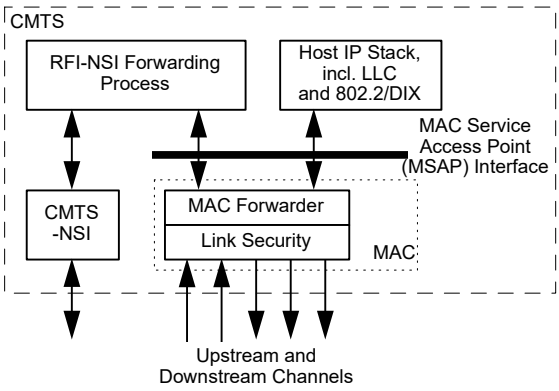

Figure 0-4. MAC Forwarder

Delivery of frames may be based on data-link-layer (bridging) semantics, network-layer (routing) semantics, or some combination. Higher-layer semantics may also be employed (e.g., filters on UDP port numbers). The CMTS MUST provide IP connectivity between hosts attached to cable modems, and must do so in a way that meets the expectations of Ethernet-attached customer equipment. For example, the CMTS must either forward ARP packets or it must facilitate a proxy ARP service. The CMTS MAC Forwarder MAY provide service for non-IP protocols.
Note that there is no requirement that all upstream and downstream channels be aggregated under one MSAP as shown above. The vendor could just as well choose to implement multiple MSAPs, each with a single upstream and downstream channel.

3.2.1 Example Rules for Data-Link-Layer Forwarding

If the MAC Forwarder is implemented using only data-link-layer semantics, then the requirements in this section apply.
Delivery of frames is dependent on the Destination Address within the frame. The means of learning the location of each address is vendor-dependent, and MAY include:

- Transparent-bridging-like source-address learning and aging
- Gleaning from MAC Registration Request messages
- Administrative means.

If the destination address of a frame is unicast, and that address is associated with a particular downstream channel, then the frame MUST be forwarded to that channel.[1]
If the destination address of a frame is unicast, and that address is known to reside on the other (upper) side of the MSAP interface, then the frame MUST be delivered to the MSAP interface.
If the destination address is broadcast, multicast[2], or unknown, the frame MUST BE delivered to both the MSAP and to all downstream channels.
Delivery rules are similar to those for transparent bridging:

- Frames from a specific source to a particular destination MUST be delivered in order.
- Frames MUST NOT be duplicated.
- Frames that cannot be delivered in a timely fashion MUST be discarded.
- The Frame Check Sequence SHOULD be preserved rather than regenerated.

3.3 Network Layer

As stated above, the purpose of the data-over-cable system is to transport IP traffic transparently through the system.
The Network Layer protocol is the Internet Protocol (IP) version 4, as defined in RFC-791, and migrating to IP version 6.
This document imposes no requirements for reassembly of IP packets.

3.4 Above the Network Layer

The subscribers will be able to use the transparent IP capability as a bearer for higher-layer services. Use of these services will be transparent to the CM.
In addition to the transport of user data, there are several network management and operation capabilities which depend upon the Network Layer. These include:

- SNMP (Simple Network Management Protocol, [RFC-1157]), for network management.

[1] Vendors may implement extensions, similar to static addresses in 802.1d/ISO 10038 bridging, that cause such frames to be filtered or handled in some other manner.

[2] The all-CMTSs multicast address (see Appendix A) is an exception. 802.1d/ISO 10038 Spanning Tree Bridge PDUs must be forwarded.

- TFTP (Trivial File Transfer Protocol, [RFC-1350]), a file transfer protocol, for downloading software and configuration information.
- DHCP (Dynamic Host Configuration Protocol, DHCP [RFC-1541]), a framework for passing configuration information to hosts on a TCP/IP network.
- A security management protocol as defined in [MCNS2].

3.5 Data Link Layer

The Data Link Layer is divided into sublayers in accordance with [IEEE802], with the addition of Link-Layer security in accordance with [MCNS2]. The sublayers, from the top, are:

- Logical Link Control (LLC) sublayer (Class 1 only)
- Link-Layer Security sublayer
- Media Access Control (MAC) sublayer.

3.5.1 LLC Sublayer

The LLC sublayer MUST be provided in accordance with [ISO/IEC10039]. Address resolution MUST be used as defined in [RFC-826]. The MAC-to-LLC service definition is specified in [ISO/IEC10039].

3.5.2 Link-Layer Security Sublayer

Link-layer security MUST be provided in accordance with [MCNS2] and [MCNS8].

3.5.3 MAC Sublayer

The definition, in detail, of the MAC sublayer and associated interfaces is provided in Section 0 of this document.

The MAC sublayer defines a single transmitter for each downstream channel - the CMTS. All CMs listen to all frames transmitted on the downstream channel upon which they are registered and accept those where the destinations match the CM itself or CPEs reached via the CMCI port. CMs can communicate with other CMs only through the CMTS.

The upstream channel is characterized by many transmitters (CMs) and one receiver (the CMTS). Time in the upstream channel is slotted, providing for Time Division Multiple Access at regulated time ticks. The CMTS provides the time reference and controls the allowed usage for each interval. Intervals may be granted for transmissions by particular CMs, or for contention by all CMs. CMs may contend to request transmission time. To a limited extent, CMs may also contend to transmit actual data. In both cases, collisions can occur and retries are used.

Section 0 describes the MAC-sublayer messages from the CMTS which direct the behavior of the CMs on the upstream channel, as well as messaging from the CMs to the CMTS.

3.5.3.1 Overview

Some of the MAC protocol highlights include:

- Bandwidth allocation controlled by CMTS
- A stream of mini-slots in the upstream
- Dynamic mix of contention- and reservation-based upstream transmit opportunities
- Bandwidth efficiency through support of variable-length packets
- Extensions provided for future support of ATM or other Data PDU
- Class-of-service support
- Extensions provided for security as well as Virtual LANs at the Data Link layer
- Support for a wide range of data rates

3.5.3.2 MAC Service Definition

The MAC sublayer service definition is in Appendix D.

3.6 Physical Layer

The Physical (PHY) layer is comprised of two sublayers:

- Transmission Convergence sublayer (present in the downstream direction only)
- Physical Media Dependent (PMD) sublayer.

3.6.1 Downstream Transmission Convergence Sublayer

The Downstream Transmission Convergence sublayer exists in the downstream direction only. It provides an opportunity for additional services over the physical-layer bitstream. These additional services might include, for example, digital video. Definition of any such additional services is beyond the scope of this document.

This sublayer is defined as a continuous series of 188-byte MPEG [ITU-T H.222.0] packets, each consisting of a 4-byte header followed by 184 bytes of payload. The header identifies the payload as belonging to the data-over-cable MAC. Other values of the header may indicate other payloads. The mixture of payloads is arbitrary and controlled by the CMTS.

The Downstream Transmission Convergence sublayer is defined in Section 0 of this document.

3.6.2 PMD Sublayer

3.6.2.1 Overview

The PMD sublayer involves digitally modulated RF carriers on the analog cable network. In the downstream direction, the PMD sublayer is based on [ITU J.83-B], with the exceptions called out in Section 0, and includes these features:

- 64 and 256 QAM modulation formats
- 6-MHz occupied spectrum coexists with all other signals on the cable plant
- Concatenation of Reed-Solomon block code and Trellis code supports operation in a higher percentage of North American cable networks
- Variable-depth interleaver supports both latency-sensitive and -insensitive data.

The features in the upstream direction are as follows:

- Flexible and programmable CM under control of the CMTS
- Frequency agility
- Time division multiple access
- QPSK and 16 QAM modulation formats
- Support of both fixed-frame and variable-length PDU formats
- Multiple symbol rates
- Programmable Reed-Solomon block coding
- Programmable preambles.

3.6.2.2 Interface Points

Three RF interface points are defined at the PMD sublayer:

a) "Downstream output" on the CMTS

b) "Upstream input" on the CMTS

c) "Cable in/out" at the cable modem.

Separate downstream output and upstream input interfaces on the CMTS are required for compatibility with typical downstream and upstream signal combining and splitting arrangements in headends.

This page intentionally left blank

4. Physical Media Dependent Sublayer Specification

4.1 Scope

This specification defines the electrical characteristics and protocol for a cable modem (CM) and cable
modem termination system (CMTS). It is the intent of this specification to define an interoperable CM and CMTS such that any implementation of a CM can work with any CMTS. It is not the intent of this specification to imply any specific implementation.

4.2 Upstream

4.2.1 Overview

The upstream Physical Media Dependent (PMD) sublayer uses a FDMA/TDMA burst modulation format, which provides five symbol rates and two modulation formats (QPSK and 16QAM). The modulation format includes pulse shaping for spectral efficiency, is carrier-frequency agile, and has selectable output power level. The PMD sublayer format includes a variable-length modulated burst with precise timing beginning at boundaries spaced at integer multiples of 6.25 μsec apart (which is 16 symbols at the highest data rate).

Each burst supports a flexible modulation, symbol rate, preamble, randomization of the payload, and programmable FEC encoding.

All of the upstream transmission parameters associated with burst transmission outputs from the CM are configurable by the CMTS via MAC messaging. Many of the parameters are programmable on a burst-by-burst basis.

The PMD sublayer can support a near-continuous mode of transmission, wherein ramp-down of one burst MAY overlap the ramp-up of the following burst, so that the transmitted envelope is never zero. The system timing of the TDMA transmissions from the various CMs MUST provide that the center of the last symbol of one burst and the center of the first symbol of the preamble of an immediately following burst are separated by at least the duration of five symbols. The guard time MUST be greater than or equal to the duration of five symbols plus the maximum timing error. Timing error is contributed by both the CM and CMTS. CM timing performance is specified in Section 0. Maximum timing error and guard time may vary with CMTSs from different vendors.

The upstream modulator is part of the cable modem which interfaces with the cable network. The modulator contains the actual electrical-level modulation function and the digital signal-processing function; the latter provides the FEC, preamble prepend, symbol mapping, and other processing steps. This specification is written with the idea of buffering the bursts in the signal processing portion, and with the signal processing portion (1) accepting the information stream a burst at a time, (2) processing this stream into a complete burst of symbols for the modulator, and (3) feeding the properly-timed bursted symbol stream to a memoryless modulator at the exact burst transmit time. The memoryless portion of the modulator only performs pulse shaping and quadrature upconversion.

At the Demodulator, similar to the Modulator, there are two basic functional components: the demodulation function and the signal processing function. Unlike the Modulator, the Demodulator resides in the CMTS and the specification is written with the concept that

there will be one demodulation function (not necessarily an actual physical demodulator) for each carrier frequency in use. The demodulation function would receive all bursts on a given frequency.

Note: The unit design approach should be cognizant of the multiple-channel nature of the demodulation and signal processing to be carried out at the headend, and partition/share functionality appropriately to optimally leverage the multi-channel application. A Demodulator design supporting multiple channels in a Demodulator unit may be appropriate.

The demodulation function of the Demodulator accepts a varying-level signal centered around a commanded power level and performs symbol timing and carrier recovery and tracking, burst acquisition, and demodulation. Additionally, the demodulation function provides an estimate of burst timing relative to a reference edge, an estimate of received signal power, an estimate of signal-to-noise ratio, and may engage adaptive equalization to mitigate the effects of a) echoes in the cable plant, b) narrowband ingress and c) group delay. The signal-processing function of the Demodulator performs the inverse processing of the signal-processing function of the Modulator. This includes accepting the demodulated burst data stream and decoding, etc., and possibly multiplexing the data from multiple channels into a single output stream. The signal-processing function also provides the edge-timing reference and gating-enable signal to the demodulators to activate the burst acquisition for each assigned burst slot. The signal-processing function may also provide an indication of successful decoding, decoding error, or fail-to-decode for each codeword and the number of corrected Reed-Solomon symbols in each codeword.

4.2.2 Modulation Formats

The upstream modulator MUST provide both QPSK and 16QAM modulation formats. The upstream demodulator MUST support QPSK, 16QAM, or both modulation formats.

4.2.2.1 Modulation Rates

The upstream modulator MUST provide QPSK at 160, 320, 640, 1,280, and 2,560 ksym/sec, and 16QAM at 160, 320, 640, 1,280, and 2,560 ksym/sec.

This variety of modulation rates, and flexibility in setting upstream carrier frequencies, permits operators to position carriers in gaps in the pattern of narrowband ingress, as discussed in Appendix F.

The upstream symbol rate MUST be fixed for each upstream frequency.

4.2.2.2 Symbol Mapping

The modulation mode (QPSK or 16QAM) is programmable. The symbols transmitted in each mode and the mapping of the input bits to the I and Q constellation MUST be as defined in Table 0-1. In the table, I_1 is the MSB of the symbol map, Q_1 is the LSB for QPSK, and Q_0 is the LSB for 16QAM. Q_1 and I_o have intermediate bit positions in 16QAM. The MSB MUST be the first bit in the serial data into the symbol mapper.

Table 0-1. I/Q Mapping

QAM Mode	Input bit Definitions
QPSK	I_1 Q_1
16QAM	I_1 Q_1 I_0 Q_0

The upstream QPSK symbol mapping MUST be as shown in Figure 0-1.

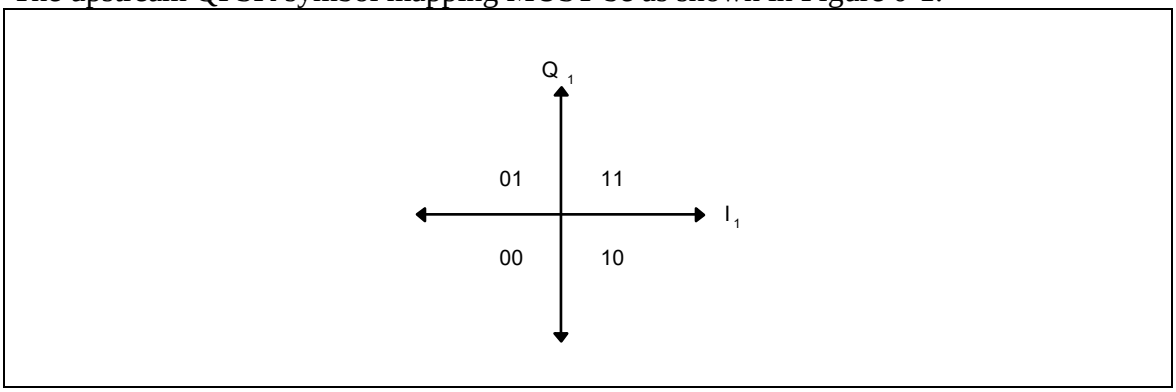

Figure 0-1. QPSK Symbol Mapping

The 16QAM non-inverted (Gray-coded) symbol mapping MUST be as shown in Figure 0-2.

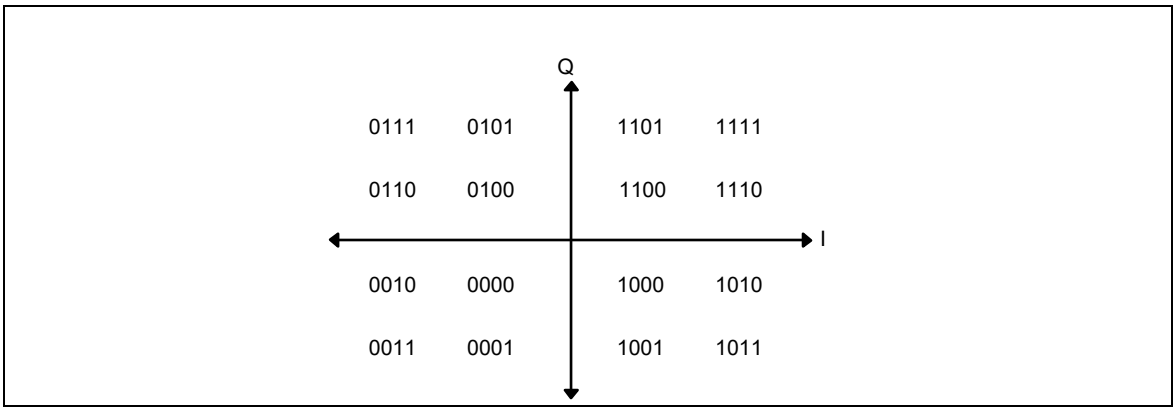

Figure 0-2. 16QAM Gray-Coded Symbol Mapping

The 16QAM differential symbol mapping MUST be as shown in Figure 0-3.

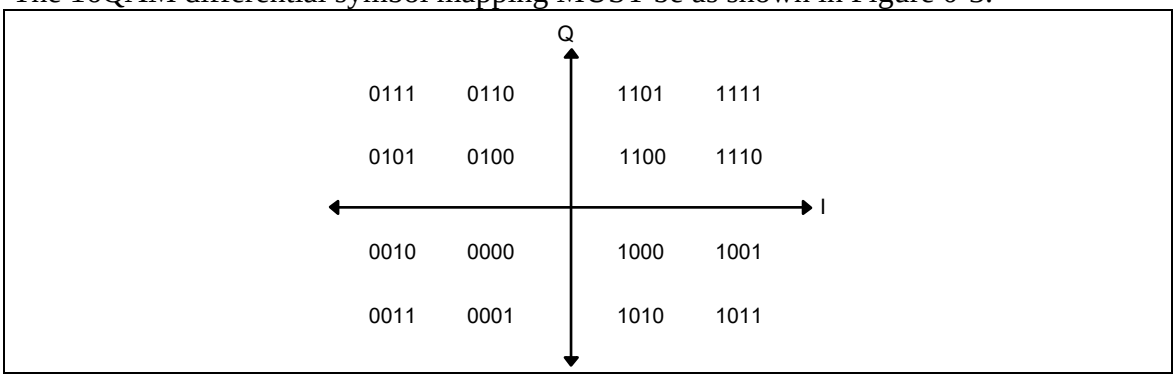

Figure 0-3. 16QAM Differential-Coded Symbol Mapping

If differential quadrant encoding is enabled, then the currently-transmitted symbol quadrant is derived from the previously transmitted symbol quadrant and the current input bits via Table 0-2.

Table 0-2. Derivation of Currently Transmitted Symbol Quadrant

Current Input Bits I(1) Q(1)	Quadrant Phase Change	MSBs of Previously Transmitted Symbol	MSBs for Currently Transmitted Symbol
00	0°	11	11
00	0°	01	01
00	0°	00	00
00	0°	10	10
01	90°	11	01
01	90°	01	00
01	90°	00	10
01	90°	10	11
11	180°	11	00
11	180°	01	10
11	180°	00	11
11	180°	10	01
10	270°	11	10
10	270°	01	11
10	270°	00	01
10	270°	10	00

4.2.2.3 Spectral Shaping

The upstream PMD sublayer MUST support a 25% Nyquist square root raised cosine shaping.

The occupied spectrum MUST NOT exceed the channel widths shown in Table 0-3.

Table 0-3. Maximum Channel Width

Symbol Rate (ksym/sec)	Channel Width (kHz)
160	200
320	400
640	800
1,280	1,600
2,560	3,200

Note: Channel width is the -30 dB bandwidth.

4.2.2.4 Upstream Frequency Agility and Range

The upstream PMD sublayer MUST support operation over the frequency range of 5-42 MHz edge to edge.

Offset frequency resolution MUST be supported having a range of ±32 kHz (increment = 1 Hz; implement within ±10 Hz) .

4.2.2.5 Spectrum Format

The upstream modulator MUST provide operation with the format $s(t) = I(t)*\cos(\omega t) - Q(t)*\sin(\omega t)$, where t denotes time and ω denotes angular frequency.

4.2.3 FEC Encode

The upstream modulator MUST be able to provide the following selections: Reed-Solomon codes over GF(256) with T = 1 to 10 or no FEC coding.
The following Reed-Solomon generator polynomial MUST be supported:

$$g(x) = (x+\alpha^{0})\,(x+\alpha^{1})\ldots(x+\alpha^{2T-1})$$

The following Reed-Solomon primitive polynomial MUST be supported:

$$p(x) = x^{8} + x^{4} + x^{3} + x^{2} + 1$$

The upstream modulator MUST provide codewords from 3 to 255 bytes in size. The un-coded word size can have a minimum of one byte.
In Shortened Last Codeword mode, the CM MUST provide the last codeword of a burst shortened from the assigned length of k data bytes per codeword as described in Section 0 of this document.
The value of T MUST be configured in response to the Upstream Channel Descriptor from the CMTS.

4.2.4 Scrambler (Randomizer)

The upstream modulator MUST implement a scrambler (shown in Figure 0-4) where the 15-bit seed value MUST be arbitrarily programmable.
At the beginning of each burst, the register is cleared and the seed value is loaded. The seed value MUST be used to calculate the scrambler bit which is combined in an XOR with the first bit of data of each burst (which is the MSB of the first symbol following the last symbol of the preamble).
The scrambler seed value MUST be configured in response to the Upstream Channel Descriptor from the CMTS.
The polynomial MUST be $x^{15} + x^{14} + 1$.

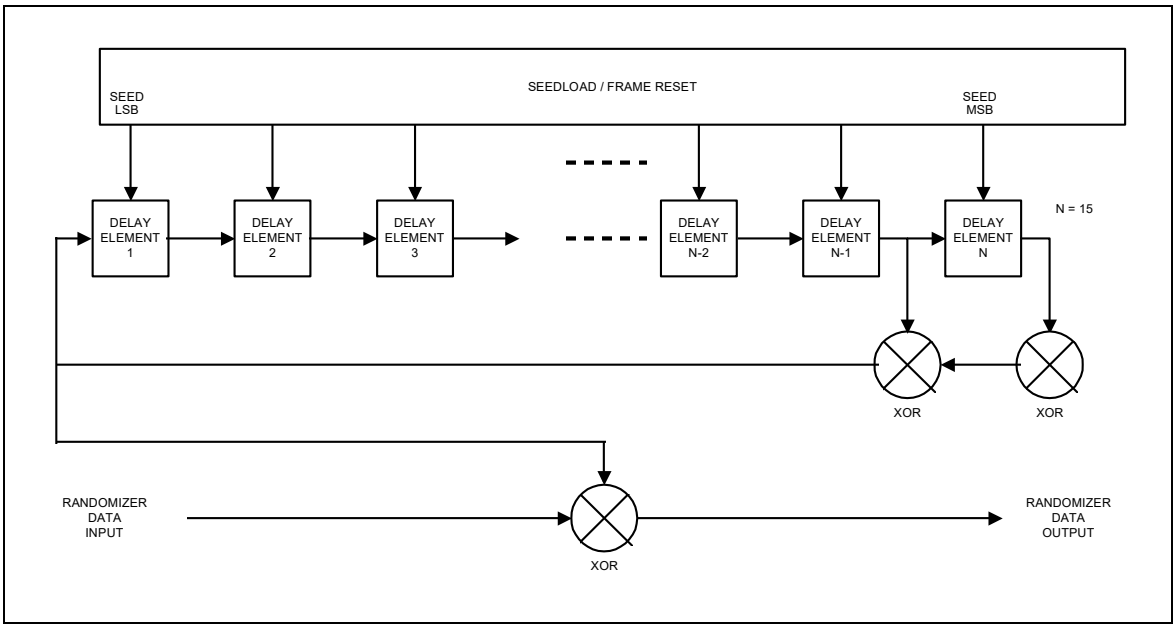

Figure 0-4. Scrambler Structure

4.2.5 Preamble Prepend

The upstream PMD sublayer MUST support a variable-length preamble field that is prepended to the data after they have been randomized and Reed-Solomon encoded.
The value of the preamble that is prepended MUST be programmable and the length MUST be 0, 2, 4, ..., or 1024 bits for QPSK and 0, 4, 8, ..., or 1024 bits for 16 QAM. Thus, the maximum length of the preamble is 512 QPSK symbols or 256 QAM symbols. The preamble length and value MUST be configured in response to the Upstream Channel Descriptor message transmitted by the CMTS.

4.2.6 Burst Profiles

The burst profiles are separated into two portions: a) Channel Burst Parameters, which are common to all users assigned to a given channel using that burst type, and b) User Unique Parameters, which vary for each user even when using the same burst type on the same channel as another user (for example, Power Level). In addition to these parameters, the assigned center frequencies and mini-slot grants MUST also be provided by the CMTS.
The upstream PMD sublayer MUST support a minimum of four distinct burst profiles to be stored within the CM, with variable parameters as defined in Table 0-4. User Unique parameters are defined in Table 0-5.

Table 0-4. Channel Burst Parameters

Parameter	Configuration Settings
Modulation	QPSK, 16 QAM
Diff Enc	On/Off
Symbol Rate	5 configuration settings
Preamble Length	0-1024 bits (Note Section 4.2.5)
Preamble Values	1024 bits
FEC On/Off	On/Off
FEC Codeword Information Bytes (k)	Fixed: 1 to 253 (assuming FEC on) Shortened: 16 to 253 (assuming FEC on)
FEC Error Correction (T bytes)	0 to 10
Scrambler Seed	15 bits
Burst Length m mini-slots*	0 to 255
Last Codeword Length	Fixed, shortened
Guard Time	5 to 255 symbols

* A burst length of 0 mini-slots in the Channel Profile means that the burst length is variable on that channel for that burst type. The burst length, while not fixed, is granted explicitly by the CMTS to the CM in the MAP.

Table 0-5. User Unique Burst Parameters

Parameter	Configuration Settings
Power Level*	8 dBmV to 58 dBmV (QPSK) 55 dBmV (16QAM), 1-dB steps
Offset Frequency*	Range = ±32 kHz; increment = 1 Hz; implement within ±10 Hz
Spectrum Inversion	Normal, Inverted
Ranging Offset	0 to (2^{16} - 1), increments of 6.25 μsec/64
Burst Length (mini-slots) if variable on this channel (changes burst-to-burst)	1 to 255 mini-slots
Transmit Equalizer Coefficients* (advanced modems only)	Up to 64 coefficients; 4 bytes per coefficient: 2 real and 2 complex

* Values in table apply for this given channel and symbol rate

The CM MUST implement the Offset Frequency to within ±10 Hz.
Ranging Offset is the delay correction applied by the CM to the CMTS Upstream Frame Time derived at the CM, in order to synchronize the upstream transmissions in the TDMA scheme. The Ranging Offset is an advancement equal to roughly the round-trip delay of the CM from the CMTS. The CMTS MUST provide feedback correction for this offset to the CM, based on reception of one or more successfully received bursts (i.e., satisfactory result from each technique employed: error correction and/or CRC), with accuracy within 1/2 symbol and resolution of 1/64 of the frame tick increment (6.25 μsec/64 = 0.09765625 μsec = 1/4 the symbol duration of the highest symbol rate = 10.24 MHz^{-1}). The CMTS sends adjustments to the CM, where a negative value implies the Ranging Offset is to be decreased, resulting in later times of transmission at the CM. CM MUST

implement the correction with resolution of at most 1 symbol duration (of the symbol rate in use for a given burst), and (other than a fixed bias) with accuracy within ±0.25 μsec plus ±1/2 symbol owing to resolution. The accuracy of CM burst timing of ±0.25 μsec plus ±1/2 symbol is relative to the mini-slot boundaries derivable at the CM based on an ideal processing of the timestamp signals received from the CMTS.

The CM MUST be capable of switching burst profiles with no reconfiguration time required between bursts except for changes in the following parameters: 1) Output Power, 2) Modulation, 3) Symbol Rate, 4) Offset frequency, 5) Channel Frequency, and 6) Ranging Offset.

For Modulation, Symbol Rate, Offset frequency and Ranging Offset, the CM MUST be able to transmit consecutive bursts as long as the CMTS allocates at least 25 symbols in between the last symbol center of one burst and the first symbol center of the following burst. The CM MUST implement, and have settled, changes in Output Power, Modulation, Symbol Rate, or Offset frequency 12.5 symbols or more before the symbol center of the first symbol of a transmitted burst and 12.5 symbols or more after the symbol center of the last symbol of a transmitted burst. Output Power, Modulation, Symbol Rate, Offset frequency, Channel Frequency and Ranging Offset MUST NOT be changed until the CM is provided sufficient time between bursts by the CMTS.

If Channel Frequency is to be changed, then the CM MUST be able to implement the change between bursts as long as the CMTS allocates at least 25 symbols plus 100 msec between the last symbol center of one burst and the first symbol center of the following burst.

The Channel Frequency of the CM MUST be settled within the phase noise and accuracy requirements of Sections 0 and 0 within 100 msec from the beginning of the change.

If Output Power is to be changed by 1 dB or less, then the CM MUST be able to implement the change between bursts as long as the CMTS allocates at least 25 symbols plus 5 μsec between the last symbol center of one burst and the first symbol center of the following burst.

If Output Power is to be changed by more than 1 dB, then the CM MUST be able to implement the change between bursts as long as the CMTS allocates at least 25 symbols plus 10 μsec between the last symbol center of one burst and the first symbol center of the following burst.

The Output Power of the CM MUST be settled to within ±0.1 dB of its final output power level a) within

5 μsec from the beginning of a change of 1 dB or less, and b) within 10 μs from the beginning of a change of greater than 1 dB.

The output transmit power MUST be maintained constant within a TDMA burst to within less than 0.1 dB (excluding the amount theoretically present due to pulse shaping, and amplitude modulation in the case of 16 QAM).

4.2.7 Burst Timing Convention

Figure 0-5 illustrates the nominal burst timing.

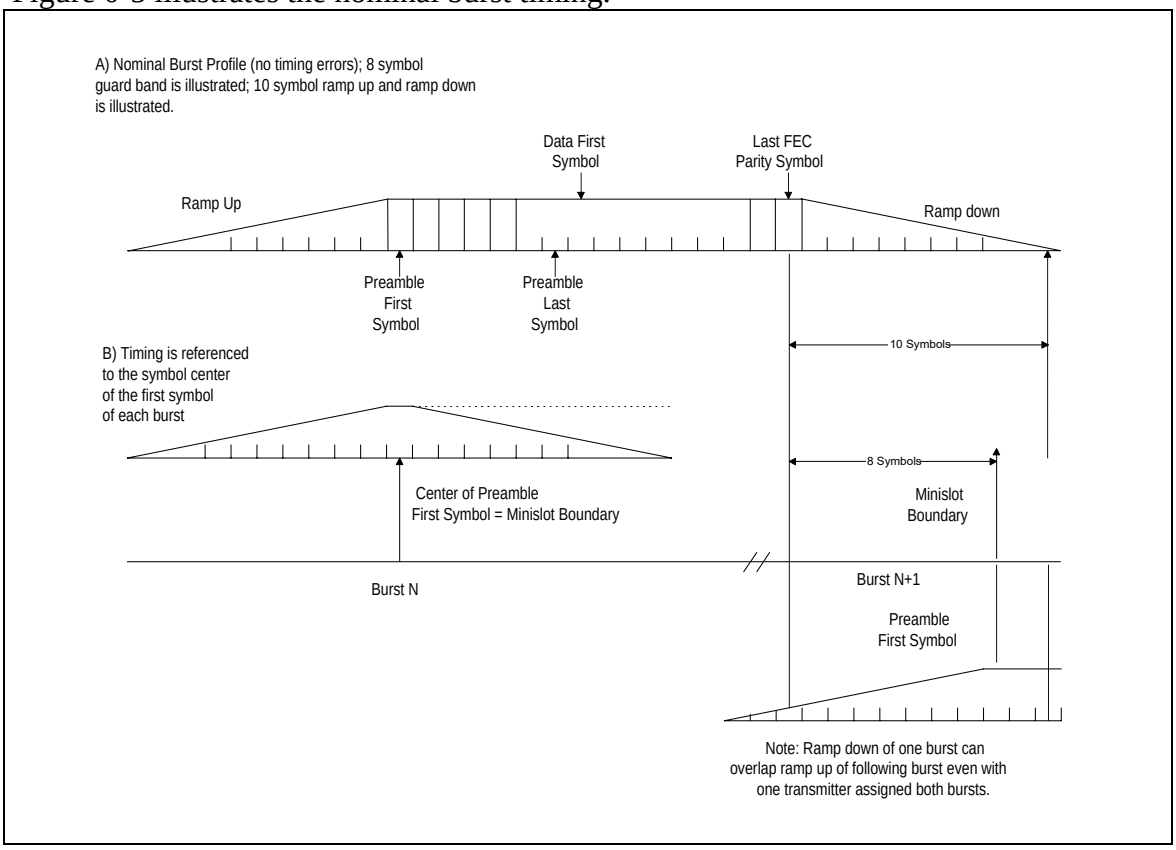

Figure 0-5. Nominal Burst Timing

Figure 0-6 indicates worst-case burst timing. In this example, burst N arrives 1.5 symbols late, and burst N+1 arrives 1.5 symbols early, but separation of 5 symbols is maintained; 8-symbol guardband shown.

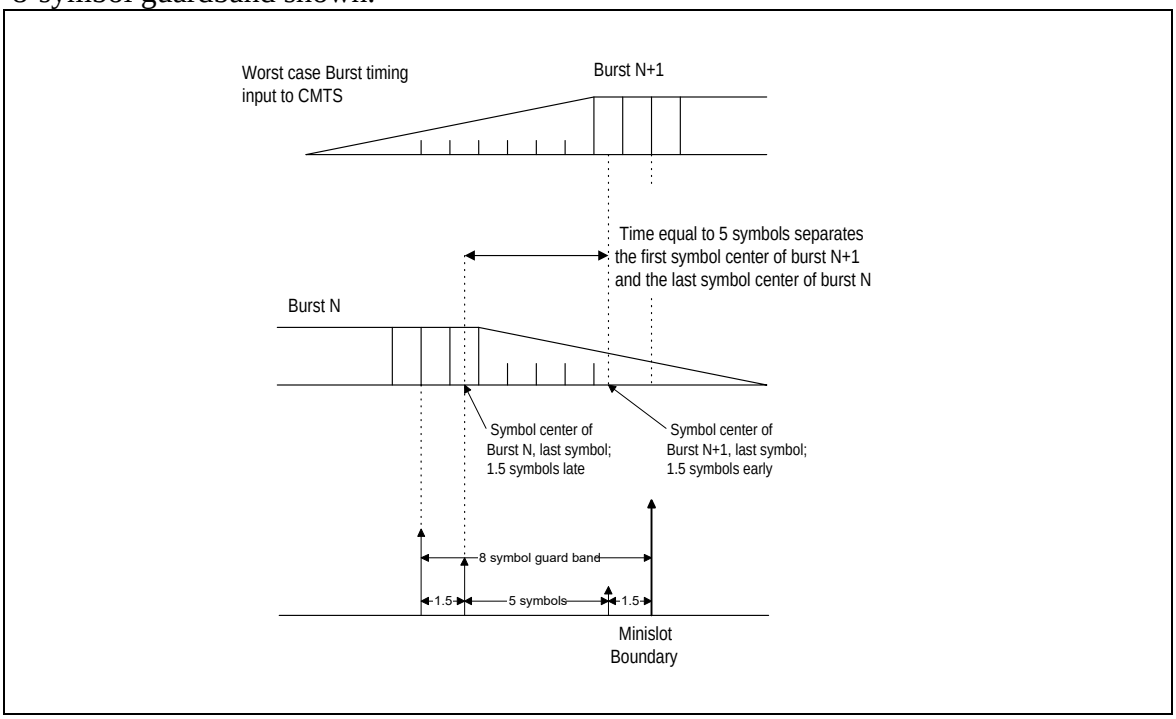

Figure 0-6. Worst-Case Burst Timing

At a symbol rate of R_s, symbols occur at a rate of one each $T_s = 1/R_s$ seconds. Ramp Up and Ramp Down are the spread of a symbol in the time domain beyond T_s duration owing to the symbol-shaping filter. If only one symbol were transmitted, its duration would be longer than T_s due to the shaping filter impulse response being longer than T_s. The spread of the first and last symbols of a burst transmission effectively extends the duration of the burst to longer than $N * T_s$, where N is the number of symbols in the burst.

4.2.8 Transmit Power Requirements

The upstream PMD sublayer MUST support varying the amount of transmit power. Requirements are presented for 1) the range of commanded transmit power, 2) the step size of the power commands, and 3) the accuracy (actual output power compared to the commanded amount) of the response to the command.

The mechanism by which power adjustments are performed is defined in Section 0 of this document. Such adjustments MUST be within the ranges of tolerances described below.

4.2.8.1 Output Power Agility and Range

The output transmit power in the design bandwidth MUST be variable over the range of +8 dBmV to 55 dBmV (16 QAM), 58 dBmV (QPSK), in 1-dB steps.

The absolute accuracy of the transmitted power MUST be ±2 dB, and step size accuracy ±0.4 dB. For example, the actual power increase resulting from a command to increase the power level by 1 dB in a CM's next transmitted burst MUST be between 0.6 dB and 1.4 dB.

4.2.9 Fidelity Requirements

4.2.9.1 Spurious Emissions

The noise and spurious power MUST NOT exceed the levels given in Table 0-6. The measurement bandwidth is equal to the symbol rate (e.g., 160 kHz for 160 ksymbols/sec) for the requirements below 42 MHz.

Table 0-6. Spurious Emissions

Parameter	Transmitting Burst	Between Bursts
Inband	-40 dBc	The greater of -72 dBc or -59 dBmV
Adjacent Band	-45 dBc	The greater of -72 dBc or -59 dBmV
3 or Fewer Carrier-Related Frequency Bands (such as second harmonic, if < 42 MHz)	-47 dBc	The greater of -72 dBc or -59 dBmV
Bands within 5 to 42 MHz (excluding assigned channel, adjacent channels, and carrier-related channels)	-53 dBc	The greater of -72 dBc or -59 dBmV
42 to 54 MHz (measured in 4 MHz)	-40 dBc	-20 dBmV
Above 54 MHz (measured in 4 MHz) 54 to 88 MHz 88-860 MHz	 -30 dBmV -45 dBmV	-55 dBmV

4.2.9.2 Spurious Emissions During Burst On/Off Transients

Each transmitter MUST control spurious emissions, prior to and during ramp up and during and following ramp down, before and after a burst in the TDMA scheme.

On/off spurious emissions, such as the change in voltage at the upstream transmitter output due to enabling or disabling transmission, MUST be no more than 100 mV, and such a step MUST be dissipated no faster than 2 µs of constant slewing. This requirement applies when the CM is transmitting at +55 dBmV or more; at backed-off transmit levels, the maximum change in voltage MUST decrease by a factor of 2 for each 6-dB decrease of power level from +55 dBmV, down to a maximum change of 7 mV at 31 dBmV and below. This requirement does not apply to CM power-on and power-off transients.

4.2.9.3 Symbol Error Rate (SER)

Modulator performance MUST be within 0.5 dB of theoretical SER vs C/N (i.e., E_s/N_o), for SER as low as 10^{-6} uncoded, for QPSK and 16 QAM.

4.2.9.4 Filter Distortion

The following requirements assume that any pre-equalization is disabled.

4.2.9.4.1 Amplitude

The spectral mask MUST be the ideal square root raised cosine spectrum with alpha = 0.25, within the ranges given below:

f_c - $R_s/4$ Hz to f_c + $R_s/4$ Hz: -0.3 dB to +0.3 dB

f_c - $3R_s/8$ Hz to f_c - $R_s/4$ Hz, and f_c + $R_s/4$ Hz to f_c + $3R_s/8$ Hz: -0.5 dB to 0.3 dB

f_c - $R_s/2$ Hz and f_c + $R_s/2$ Hz: -3.5 dB to -2.5 dB

f_c - $5R_s/8$ Hz and f_c + $5R_s/8$ Hz: no greater than -30 dB

where f_c is the center frequency and R_s is the symbol rate.

4.2.9.4.2 Phase

f_c - $5R_s/8$ Hz to f_c + $5R_s/8$ Hz: Group Delay Variation MUST NOT be greater than 100 nsec.

4.2.9.5 Carrier Phase Noise

The upstream transmitter total integrated phase noise (including discrete spurious noise) MUST be less than or equal to -43 dBc summed over the spectral regions spanning 1 kHz to 1.6 MHz above and below the carrier.

4.2.9.6 Channel Frequency Accuracy

The CM MUST implement the assigned channel frequency within ± 50 parts per million over a temperature range of 0 to 40 degrees C up to five years from date of manufacture.

4.2.9.7 Symbol Rate Accuracy

The upstream modulator MUST provide an absolute accuracy of symbol rates ± 50 parts per million over a temperature range of 0 to 40 degrees C up to five years from date of manufacture.

4.2.9.8 Symbol Timing Jitter

Peak-to-peak symbol jitter, referenced to the previous symbol zero-crossing, of the transmitted waveform, MUST be less than 0.02 of the nominal symbol duration over a 2-sec period. In other words, the difference between the maximum and the minimum symbol duration during the 2-sec period shall be less than 0.02 of the nominal symbol duration for each of the five upstream symbol rates.

The peak-to-peak cumulative phase error, referenced to the first symbol time and with any fixed symbol frequency offset factored out, MUST be less than 0.04 of the nominal symbol duration over a 0.1-sec period. In other words, the difference between the maximum and the minimum cumulative phase error during the 0.1-sec period shall be less than 0.04 of the nominal symbol duration for each of the five upstream symbol rates. Factoring out a fixed symbol frequency offset is to be done by using the computed mean symbol duration during the 0.1 sec.

4.2.10 Frame Structure

Figure 0-7 shows two examples of the frame structure: one where the packet length equals the number of information bytes in a codeword, and another where the packet length is longer than the number of information bytes in one codeword, but less than in two codewords. Example 1 illustrates the fixed codeword-length mode, and Example 2 illustrates the shortened last codeword mode. These modes are defined in Section 0.

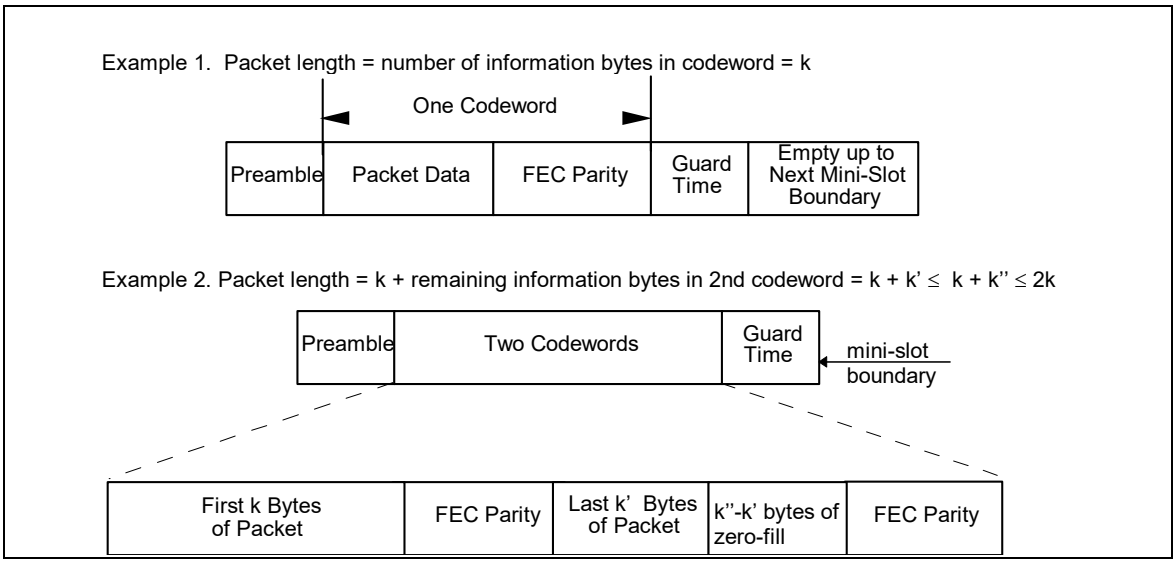

Figure 0-7. Example Frame Structures with Flexible Burst Length Mode

4.2.10.1 Codeword Length

The CM operates in fixed-length codeword mode or with shortened codeword capability enabled. Shortened codeword capability is available with k >= 16 bytes, where k is the number of information bytes in a codeword. With k < 16, shortened codeword capability is not available.

The following descriptions apply to an allocated grant of mini-slots in both contention and non-contention regions. (Allocation of mini-slots is discussed in Section 6 of this document.) The intent of the description is to define rules and conventions such that CMs request the proper number of mini-slots and the CMTS PHY knows what to expect regarding the FEC framing in both fixed codeword length and shortened last codeword modes.

4.2.10.1.1 Fixed Codeword Length

With the fixed-length codewords, after all the data are encoded, zero-fill will occur in this codeword if necessary to reach the assigned k data bytes per codeword, and zero-fill MUST continue up to the point when no additional fixed-length codewords can be inserted before the end of the last allocated min-slot in the grant, accounting for FEC parity and guard-time symbols.

4.2.10.1.2 Shortened Last Codeword

As shown in Figure 0-7, let k' = the number of information bytes that remain after partitioning the information bytes of the burst into full-length (k burst data bytes) codewords. The value of k' is less than k. Given operation in a shortened last codeword mode, let k" = the number of burst data bytes plus zero-fill bytes in the shortened last codeword. In shortened codeword mode, the CM will encode the data bytes of the burst (including MAC Header) using the assigned codeword size (k information bytes per codeword) until 1) all the data are encoded, or 2) a remainder of data bytes is left over which is less than k. Shortened last codewords shall not have less than 16 information bytes, and this is to be considered when CMs make requests of mini-slots. In shortened last codeword mode, the CM will zero-fill data if necessary until the end of the mini-slot allocation, which in most cases will be the next mini-slot boundary, accounting for FEC parity and guard-time

symbols. In many cases, only k” - k’ zero-fill bytes are necessary to fill out a mini-slot allocation with 16 <= k” <= k and k’ <= k”. However, note the following.
More generally, the CM is required to zero-fill data until the point when no additional fixed-length codewords can be inserted before the end of the last allocated mini-slot in the grant (accounting for FEC parity and guard-time symbols), and then, if possible, a shortened last codeword of zero-fill shall be inserted to fit into the mini-slot allocation.
If, after zero-fill of additional codewords with k information bytes, there are less than 16 bytes remaining in the allocated grant of mini-slots, accounting for parity and guard-time symbols, then the CM shall not create this last shortened codeword.

4.2.11 Signal Processing Requirements

The signal processing order for each burst packet type MUST be compatible with the sequence shown in Figure 0-8 and MUST follow the order of steps in Figure 0-9.

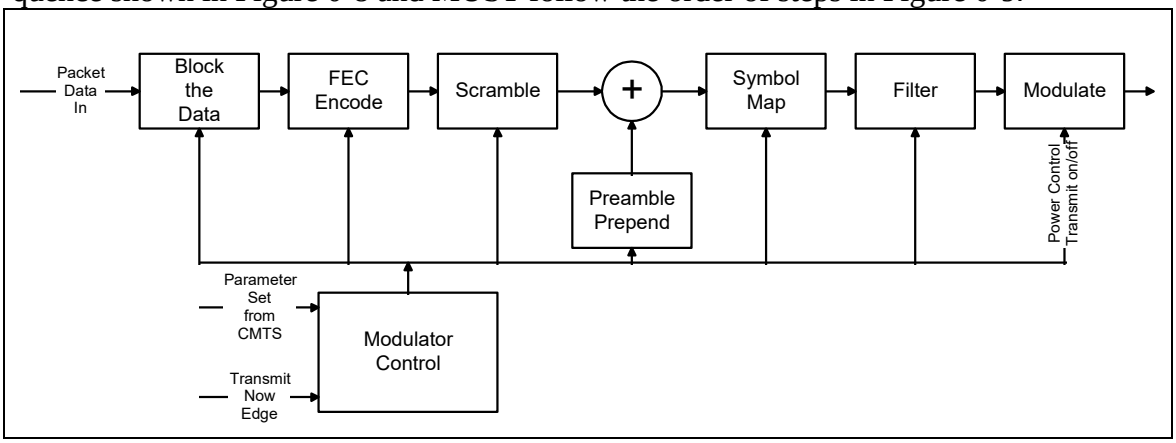

Figure 0-8. Signal-Processing Sequence

	Packet Stream Input ⇓
Block the Data	Separate Packet into Information Blocks (=data bytes in one codeword) ⇓
FEC Encode	FEC Encode (Reed-Solomon) each Information Block, using shortened codeword for last block if needed. FEC can be turned off. ⇓
Scramble	Scramble (see paragraph 0) ⇓
Preamble Prepend	Preamble prepend Symbols ⇓
Symbol Map	Symbol Map the Data Stream into Modulator Symbols ⇓
Filter	Filter Symbol Stream for Spectral Shaping ⇓
Modulate	Modulate at Precise Times (QPSK; 16 QAM) ⇓
	Output RF Waveform Bursts

Figure 0-9. TDMA Upstream Transmission Processing

4.2.12 Upstream Demodulator Input Power Characteristics

The maximum total input power to the upstream demodulator MUST NOT exceed 35 dBmV.
The intended received power in each carrier MUST be within the values shown in Table 0-7.

Table 0-7. Maximum Range of Commanded Nominal Receive Power in Each Carrier

Symbol Rate (ksym/sec)	Maximum Range (dBmV)
160	-16 to +14
320	-13 to +17
640	-10 to +20
1,280	-7 to +23
2,560	-4 to +26

The demodulator MUST operate within its defined performance specifications with received bursts within ±6 dB of the nominal commanded received power.

4.2.13 Upstream Electrical Output from the CM

The CM MUST output an RF modulated signal with the characteristics delineated in Table 0-8.

Table 0-8. Electrical Output from CM

Parameter	Value
Frequency	5 to 42 MHz edge to edge
Level range (one channel)	+8 to +55 dBmV (16QAM) +8 to +58 dBmV (QPSK)
Modulation Type	QPSK and 16QAM
Symbol Rate (nominal)	160, 320, 640, 1,280 and 2,560 ksym/sec
Bandwidth	200, 400, 800, 1,600 and 3,200 kHz
Output impedance	75 ohms
Output Return Loss	> 6 dB
Connector	F connector per [IPS-SP-401] (common with the input)

4.3 Downstream

4.3.1 Downstream Protocol

The downstream PMD sublayer MUST conform to ITU-T Recommendations J.83, Annex B for Low-Delay Video Applications [ITU J.83-B], with the exceptions called out in Section 0.

4.3.2 Scalable Interleaving to Support Low Latency

The downstream PMD sublayer MUST support a variable-depth interleaver with the characteristics defined in Table 0-9. The table contains a subset of interleaver modes found in [ITU J.83-B].

Table 0-9. Interleaver Characteristics

I (Number of Taps)	J (Increment)	Burst protection 64QAM/256QAM	Latency 64QAM/256QAM
8	16	5.9 µsec/4.1 µsec	0.22 msec/0.15 msec
16	8	12 µsec/8.2 µsec	0.48 msec/0.33 msec
32	4	24 µsec/16 µsec	0.98 msec/0.68 msec
64	2	47 µsec/33 µsec	2.0 msec/1.4 msec
128	1	95 µsec/66 µsec	4.0 msec/2.8 msec

The interleaver depth, which is coded in a 4-bit control word contained in the FEC frame synchronization trailer, always reflects the interleaving in the immediately-following frame. In addition, errors are allowed while the interleaver memory is flushed after a change in interleaving is indicated.

Refer to [ITU J.83-B] for the control bit specifications required to specify which interleaving mode is used.

4.3.3 Downstream Frequency Plan

The downstream frequency plan should comply with Harmonic Related Carrier (HRC), Incremental Related Carrier (IRC) or Standard (STD) North American frequency plans per [IS-6]. However, operation below a center frequency of 91 MHz is not required.

4.3.4 CMTS Output Electrical

The CMTS MUST output an RF modulated signal with the following characteristics defined in Table 0-10.

Table 0-10. CMTS Output

Parameter	Value
Center Frequency (f_c)	91 to 857 MHz ±30 kHz (see note)
Level	Adjustable over the range 50 to 61 dBmV
Modulation Type	64QAM and 256QAM
Symbol Rate (nominal)	
64QAM	5.056941 Msym/sec
256QAM	5.360537 Msym/sec
Nominal Channel Spacing	6 MHz
Frequency response	
64QAM	~18% Square Root Raised Cosine shaping
256QAM	~12% Square Root Raised Cosine shaping
Spurious and Noise	
Inband (f_c ± 3 MHz)	< -57 dBc in 6 MHz
Adjacent channel (f_c ± 3.0 MHz) to (f_c ± 3.75 MHz)	< -58 dBc in 750 kHz
Adjacent channel (f_c ± 3.75 MHz) to (f_c ± 9 MHz)	< -62 dBc, in 5.25 MHz, excluding up to 3 spurs, each of which must be <-60 dBc when measured in a 10 kHz band
Next adjacent channel (f_c ± 9 MHz) to (f_c ± 15 MHz)	< -65 dBc in 6 MHz
Other channels (47 MHz to 1,000 MHz)	< -80 dBmV/Hz
Output Impedance	75 ohms
Output Return Loss	> 14 dB within an output channel up to 750 MHz; > 13 dB in an output channel above 750 MHz
Connector	F connector per [IPS-SP-401]

Note: ±30 kHz includes an allowance of 25 kHz for the largest FCC frequency offset normally built into upconverters.

4.3.5 Downstream Electrical Input to CM

The CM MUST accept an RF modulated signal with the following characteristics (Table 0-11.)

Table 0-11. Electrical Input to CM

Parameter	Value
Center Frequency	91 to 857 MHz ±30 kHz
Level Range (one channel)	-15 dBmV to +15 dBmV
Modulation Type	64QAM and 256QAM
Symbol Rate (nominal)	5.056941 Msym/sec (64QAM) and 5.360537 Msym/sec (256QAM)
Bandwidth	6 MHz (18% Square Root Raised Cosine shaping for 64QAM and 12% Square Root Raised Cosine shaping for 256QAM)
Total Input Power (40-900 MHz)	<30 dBmV
Input (load) Impedance	75 ohms
Input Return Loss	> 6 dB
Connector	F connector per [IPS-SP-401] (common with the output)

4.3.6 CM BER Performance

The bit-error-rate performance of a CM MUST be as described in this section. The requirements apply to the I = 128, J = 1 mode of interleaving.

4.3.6.1 64QAM

4.3.6.1.1 64QAM CM BER Performance

Implementation loss of the CM MUST be such that the CM achieves a post-FEC BER less than or equal to 10^{-8} when operating at a carrier to noise ratio (E_s/N_o) of 23.5 dB or greater.

4.3.6.1.2 64QAM Image Rejection Performance

Performance as described in Section 0 MUST be met with analog or digital signal at +10 dBc in any portion of the RF band other than the adjacent channels.

4.3.6.1.3 64QAM Adjacent Channel Performance

Performance as described in Section 0 MUST be met with digital signal at 0 dBc in the adjacent channels.

Performance as described in Section 0 MUST be met with analog signal at +10 dBc in the

adjacent channels.

Performance as described in Section 0, with an additional 0.2-dB allowance, MUST be met with digital signal at +10 dBc in the adjacent channels.

4.3.6.2 256QAM

4.3.6.2.1 256QAM CM BER Performance

Implementation loss of the CM MUST be such that the CM achieves a post-FEC BER less than or equal to 10^{-8} when operating at a carrier to noise ratio (E_s/N_o) of 30 dB or greater.

4.3.6.2.2 256QAM Image Rejection Performance

Performance as described in Section 0 MUST be met with analog or digital signal at +10 dBc in any portion of the RF band other than the adjacent channels.

4.3.6.2.3 256QAM Adjacent Channel Performance

Performance as described in Section 0 MUST be met with analog or digital signal at 0 dBc in the adjacent channels.

Performance as described in Section 0, with an additional 0.5-dB allowance, MUST be met with analog signal at +10 dBc in the adjacent channels.

Performance as described in Section 0, with an additional 1.0-dB allowance, MUST be met with digital signal at +10 dBc in the adjacent channels.

This page intentionally left blank

5. Downstream Transmission Convergence Sublayer

5.1 Introduction

In order to improve demodulation robustness, facilitate common receiving hardware for both video and data, and provide an opportunity for the possible future multiplexing of video and data over the PMD sublayer bitstream defined in Section 0**,** a sublayer is interposed between the downstream PMD sublayer and the Data-Over-Cable MAC sublayer. The downstream bitstream is defined as a continuous series of 188-byte MPEG [ITU-T H.222.0] packets. These packets consist of a 4-byte header followed by 184 bytes of payload. The header identifies the payload as belonging to the Data-Over-Cable MAC. Other values of the header may indicate other payloads. The mixture of MAC payloads and those of other services is optional and is controlled by the CMTS.
Figure 0-1 illustrates the interleaving of Data-Over-Cable (DOC) MAC bytes with other digital information (digital video in the example shown).

header=DOC	DOC MAC payload
header=video	digital video payload
header=video	digital video payload
header=DOC	DOC MAC payload
header=video	digital video payload
header=DOC	DOC MAC payload
header=video	digital video payload
header=video	digital video payload
header=video	digital video payload

Figure 0-1. Example of Interleaving MPEG Packets in Downstream

5.2 MPEG Packet Format

The format of an MPEG Packet carrying MCNS data is shown in Figure 0-2. The packet consists of a
4-byte MPEG Header, a pointer_field (not present in all packets) and the MCNS Payload.

MPEG Header (4 bytes)	pointer_field (1 byte)	MCNS Payload (183 or 184 bytes)

Figure 0-2. Format of an MPEG Packet

5.3 MPEG Header for MCNS Data-Over-Cable

The format of the MPEG Transport Stream header is defined in Section 2.4 of [ITU-T H.222.0]. The particular field values that distinguish Data-Over-Cable MAC streams are defined in Table 0-1. Field names are from the ITU specification.
The MPEG Header consists of 4 bytes that begin the 188-byte MPEG Packet. The format of the header for use on an MCNS Data-Over-Cable PID is restricted to that shown in Table 0-1. The header format conforms to the MPEG standard, but its use is restricted in this specification to NOT ALLOW inclusion of an adaptation_field in the MPEG packets.

Table 0-1. MPEG Header Format for MCNS Data-Over-Cable Packets

Field	Length (bits)	Description
sync_byte	8	0x47; MPEG Packet Sync byte
transport_error_indicator	1	Indicates an error has occurred in the reception of the packet. This bit is reset to zero by the sender, and set to one whenever an error occurs in transmission of the packet
payload_unit_start_indicator	1	A value of one indicates the presence of a pointer_field as the first byte of the payload (fifth byte of the packet)
transport_priority	1	Reserved; set to zero
PID (see Note)	13	MCNS Data-Over-Cable well-known PID (0x1FFE)
transport_scrambling_control	2	Reserved, set to '00'
adaptation_field_control	2	'01'; use of the adaptation_field is NOT ALLOWED on the MCNS PID
continuity_counter	4	cyclic counter within this PID

Note: In the future, additional PIDs MAY be assigned to a CM. See Section 9.3 of this document.

5.4 MPEG Payload for MCNS Data-Over-Cable

The MPEG payload portion of the MPEG packet will carry the MCNS MAC frames. The first byte of the MPEG payload will be a 'pointer_field' if the payload_unit_start_indicator (PUSI) of the MPEG header is set.

stuff_byte

This standard defines a stuff_byte pattern having a value (0xFF) that is used within the MCNS payload to fill any gaps between the MCNS MAC frames. This value is chosen as an unused value for the first byte of the MCNS MAC frame. The 'FC' byte of the MAC Header will be defined to never contain this value. (FC_TYPE = '11' indicates a MAC-specific frame, and FC_PARM = '11111' is not currently used and, according to this specification, is defined as an illegal value for FC_PARM.)

pointer_field

The pointer_field is present as the fifth byte of the MPEG packet (first byte following the MPEG header) whenever the PUSI is set to one in the MPEG header. The interpretation of the pointer_field is as follows:
The pointer_field contains the number of bytes in this packet that immediately follow the pointer_field that the CM decoder must skip past before looking for the beginning of an MCNS MAC Frame. A pointer field MUST be present if it is possible to begin an MCNS

Frame in the packet, and MUST point to the beginning of the first MAC frame to start in the packet or to any preceding stuff_byte.

5.5 Interaction with the MAC Sublayer

MAC frames may begin anywhere within an MPEG packet, MAC frames may span MPEG packets, and several MAC frames may exist within an MPEG packet.

The following figures show the format of the MPEG packets that carry MCNS MAC frames. In all cases, the PUSI flag indicates the presence of the pointer_field as the first byte of the MPEG payload.

Figure 0-3 shows a MAC frame that is positioned immediately after the pointer_field byte. In this case, pointer_field is zero, and the MCNS decoder will begin searching for a valid FC byte at the byte immediately following the pointer_field.

MPEG Header (PUSI = 1)	pointer_field (= 0)	MAC Frame (up to 183 bytes)	stuff_byte(s) (0 or more)

Figure 0-3. Packet Format Where a MAC Frame Immediately Follows the pointer_field

Figure 0-4 shows the more general case where a MAC Frame is preceded by the tail of a previous MAC Frame and a sequence of stuffing bytes. In this case, the pointer_field still identifies the first byte after the tail of Frame #1 (a stuff_byte) as the position where the decoder should begin searching for a legal MAC sublayer FC value. This format allows the multiplexing operation in the CMTS to immediately insert a MAC frame that is available for transmission if that frame arrives after the MPEG header and pointer_field have been transmitted.

In order to facilitate multiplexing of the MPEG packet stream carrying MCNS data with other MPEG-encoded data, the CMTS SHOULD NOT transmit MPEG packets with the MCNS PID which contain only stuff_bytes in the payload area. MPEG null packets SHOULD be transmitted instead. Note that there are timing relationships implicit in the MCNS MAC sublayer which must also be preserved by any MPEG multiplexing operation.

MPEG Header (PUSI = 1)	pointer_field (= M)	Tail of MAC Frame #1 (M bytes)	stuff_byte(s) (0 or more)	Start of MAC Frame #2

Figure 0-4. Packet Format with MAC Frame Preceded by Stuffing Bytes

Figure 0-5 shows that multiple MAC frames may be contained within the MPEG packet. The MAC frames may be concatenated one after the other or be separated by an optional sequence of stuffing bytes.

MPEG Header (PUSI = 1)	pointer_field (= 0)	MAC Frame #1	MAC Frame #2	stuff_byte(s) (0 or more)	MAC Frame #3

Figure 0-5. Packet Format Showing Multiple MAC Frames in a Single Packet

Figure 0-6 shows the case where a MAC frame spans multiple MPEG packets. In this case, the pointer_field of the succeeding frame points to the byte following the last byte of the tail of the first frame.

MPEG Header (PUSI = 1)	pointer_field (= 0)	stuff_bytes (0 or more)	Start of MAC Frame #1 (up to 183 bytes)	
MPEG Header (PUSI = 0)	Continuation of MAC Frame #1 (184 bytes)			
MPEG Header (PUSI = 1)	pointer_field (= M)	Tail of MAC Frame #1 (M bytes)	stuff_byte(s) (0 or more)	Start of MAC Frame #2 (M bytes)

Figure 0-6. Packet Format Where a MAC Frame Spans Multiple Packets

The Transmission Convergence sublayer must operate closely with the MAC sublayer in providing an accurate timestamp to be inserted into the Time Synchronization message (refer to Sections 0 and 0).

5.6 Interaction with the Physical Layer

The MPEG-2 packet stream MUST be encoded according to [ITU-T J.83-B], including MPEG-2 transport framing using a parity checksum as described in [ITU-T J.83-B].

5.7 MPEG Header Synchronization and Recovery

The MPEG-2 packet stream SHOULD be declared "in frame" (i.e., correct packet alignment has been achieved) when five consecutive correct parity checksums, each 188 bytes from the previous one, have been received.
The MPEG-2 packet stream SHOULD be declared "out of frame", and a search for correct packet alignment started, when nine consecutive incorrect parity checksums are received.
The format of MAC frames is described in detail in Section 0.

6. Media Access Control Specification

6.1 Introduction

6.1.1 Overview

This section describes version 1.0 of the MCNS MAC protocol. Some of the MAC protocol highlights
include:

- Bandwidth allocation controlled by CMTS
- A stream of mini-slots in the upstream
- Dynamic mix of contention- and reservation-based upstream transmit opportunities
- Bandwidth efficiency through support of variable-length packets
- Extensions provided for future support of ATM or other Data PDU

- Class of service support
- Extensions provided for security as well as virtual LANs at the Data Link layer
- Support for a wide range of data rates.

6.1.2 Definitions

6.1.2.1 MAC-Sublayer Domain

A MAC-sublayer domain is a collection of upstream and downstream channels for which a single MAC Allocation and Management protocol operates. Its attachments include one CMTS and some number of CMs. The CMTS MUST service all of the upstream and downstream channels; each CM MAY access one or more upstream and downstream channels.

6.1.2.2 MAC Service Access Point

A MAC Service Access Point (MSAP) is an attachment to a MAC-sublayer domain.

6.1.2.3 Service ID

The concept of Service IDs is central to the operation of the MAC protocol. Service IDs provide both device identification and class-of-service management. In particular, they are integral to upstream bandwidth allocation.

A Service ID defines a particular mapping between a CM and the CMTS. This mapping is the basis on which bandwidth is allocated to the CM by the CMTS and by which class of service is implemented. Within a MAC-sublayer domain, all Service IDs MUST be unique.

The CMTS MAY assign one or more Service IDs (SIDs) to each CM, corresponding to the classes of service required by the CM. This mapping MUST be negotiated between the CMTS and the CM during CM registration.

In a basic CM implementation, a single Service ID can be used; for example to offer best-effort IP service. However, the Service ID concept allows for more complex CMs to be developed with support for multiple service classes while supporting interoperability with more basic modems. In particular, the Service ID concept is expected to support the concept of “data flows” on which protocols such as RSVP and RTP are based.

The Service ID is unique within a single MAC-sublayer domain. The length of the Service ID is 14 bits (although the Service ID is sometimes carried in a 16-bit field).

6.1.2.4 Upstream Intervals, Mini-Slots and 6.25-Microsecond Increments

The upstream transmission time-line is divided into intervals by the upstream bandwidth allocation mechanism. Each interval is an integral number of mini-slots. A “mini-slot” is the unit of granularity for upstream transmission opportunities. There is no implication that any PDU can actually be transmitted in a single mini-slot. Each interval is labeled with a usage code which defines both the type of traffic that can be transmitted during that interval and the physical-layer modulation encoding. A mini-slot is an integer multiple of 6.25-μs increments. The relationship between mini-slots, bytes, and time ticks is described further in Section 0. The usage code values are defined in Table 0-15 and allowed use is defined in Section 0. The binding of these values to physical-layer parameters is defined in Table 0-13.

6.1.2.5 Frame

A frame is a unit of data exchanged between two (or more) entities at the Data Link Layer. A MAC frame consists of a MAC Header (beginning with a Frame Control byte; see Figure 0-4), and may incorporate ATM cells or a variable-length data PDU. The variable-length PDU includes a pair of 48-bit addresses, data, and a CRC sum. In special cases, the MAC Header may encapsulate multiple MAC frames (see Section 0).

6.1.3 Future Use

A number of fields are defined as being "for future use" in the various MAC frames described in this document. These fields MUST NOT be interpreted or used in any manner by this version (1.0) of the MAC protocol.

6.2 MAC Frame Formats

6.2.1 Generic MAC Frame Format

A MAC frame is the basic unit of transfer between MAC sublayers at the CMTS and the cable modem. The same basic structure is used in both the upstream and downstream directions. MAC frames are variable in length. The term "frame" is used in this context to indicate a unit of information that is passed between MAC sublayer peers. This is not to be confused with the term "framing" that indicates some fixed timing relationship.
There are three distinct regions to consider, as shown in Figure 0-1. Preceding the MAC frame is either PMD sublayer overhead (upstream) or an MPEG transmission convergence header (downstream). The first part of the MAC frame is the MAC Header. The MAC Header uniquely identifies the contents of the MAC frame. Following the header is the optional Data PDU region. The format of the Data PDU and whether it is even present is described in the MAC Header.

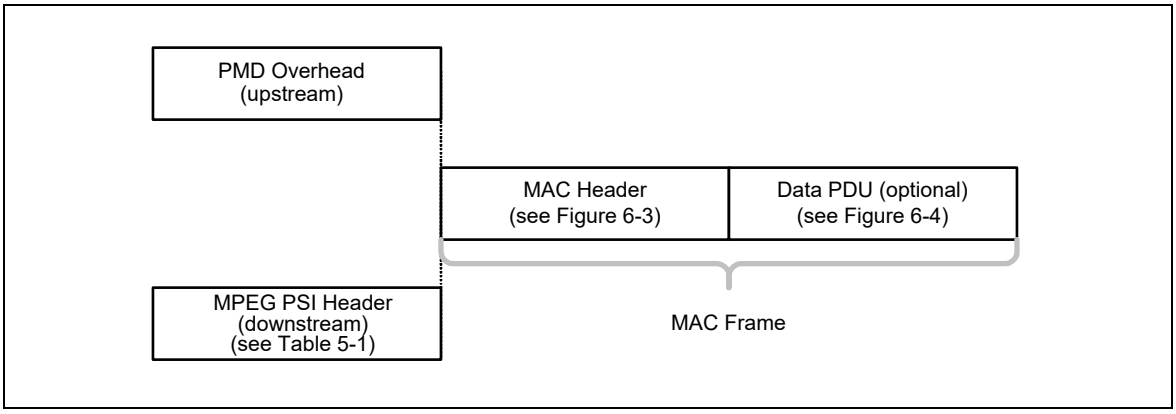

Figure 0-1. Generic MAC Frame Format

6.2.1.1 PMD Overhead

In the upstream direction, the PHY layer indicates the start of the MAC frame to the MAC sublayer. From the MAC sublayer's perspective, it only needs to know the total amount of overhead so it can account for it in the Bandwidth Allocation process. More information on this may be found in the PMD Sublayer section of this document (Section 0).

The FEC overhead is spread throughout the MAC frame and is assumed to be transparent to the MAC data stream. The MAC sublayer does need to be able to account for the overhead when doing Bandwidth Allocation.

6.2.1.2 MAC Frame Transport

The transport of MAC frames by the PMD sublayer for upstream channels is shown in Figure 0-2.

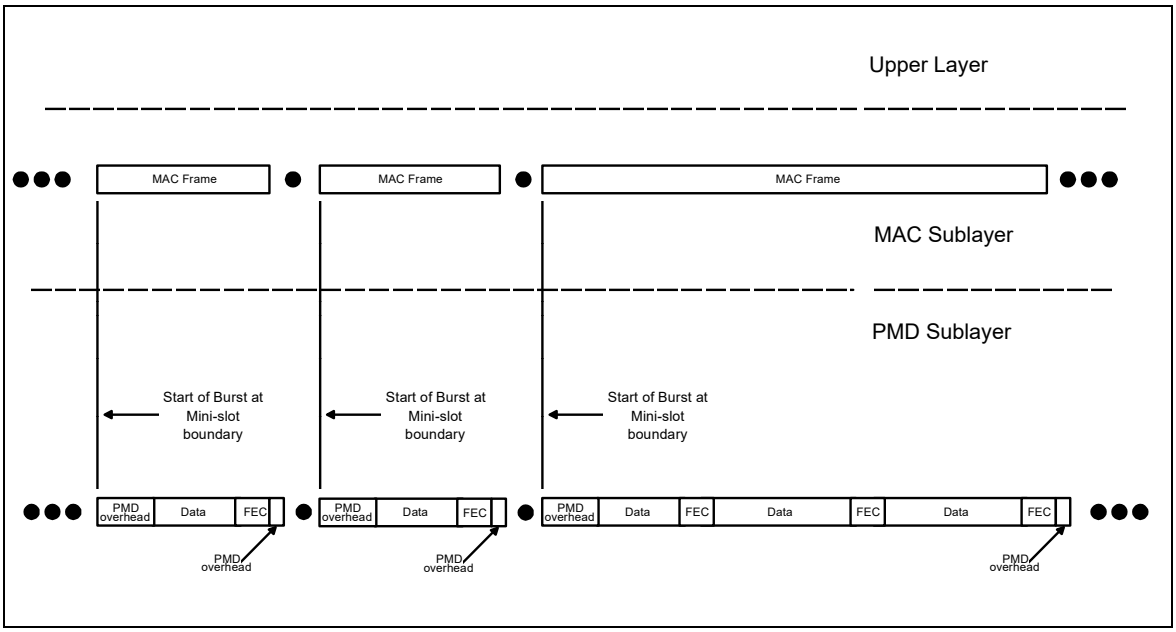

Figure 0-2. Upstream MAC/PMD Convergence

The layering of MAC frames over MPEG in the downstream channel is described in Section 0.

6.2.1.3 Ordering of Bits and Octets

Within an octet, the least-significant bit is the first transmitted on the wire. This follows the convention used by Ethernet and [ISO 8802-3]. This is often called bit-little-endian order[3].

Within the MAC layer, when numeric quantities are represented by more than one octet (i.e., 16-bit and 32-bit values), the octet containing the most-significant bits is the first transmitted on the wire. This follows the convention used by TCP/IP and [ISO8802-3]. This is sometimes called byte-big-endian order.

6.2.1.4 MAC Header Format

The MAC Header format MUST be as shown in Figure 0-3.

[3] This applies to the upstream channel only. For the downstream channel, the MPEG transmission convergence sublayer presents an octet-wide interface to the MAC, so the MAC sublayer does not define the bit order.

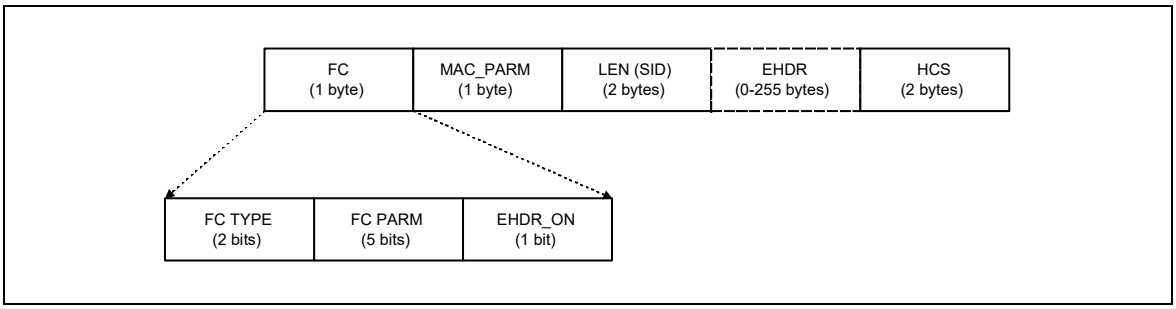

Figure 0-3. MAC Header Format

All MAC Headers MUST have the general format as shown in Table 0-1. The Frame Control (FC) field is the first byte and uniquely identifies the rest of the contents within the MAC Header. The FC field is followed by 3 bytes of MAC control; an OPTIONAL Extended Header field (EHDR); plus a Header Check Sequence (HCS) to ensure the integrity of the MAC Header.

Table 0-1. Generic MAC Header Format

MAC Header Field	Usage	Size
FC	Frame Control: Identifies type of MAC Header	8 bits
MAC_PARM	Parameter field whose use is dependent on FC: if EHDR_ON=1; used for EHDR field length (ELEN) else if for concatenated frames (see Table 0-9) used for MAC frame count else (for Requests only) indicates the number of mini-slots and/or ATM cells requested	8 bits
LEN (SID)	The length of the MAC frame. The length is defined to be the sum of the number of bytes in the extended header (if present) and the number of bytes following the HCS field. (For a REQ Header, this field is the Service ID instead)	16 bits
EHDR	Extended MAC Header (where present; variable size).	0-255 bytes
HCS	MAC Header Check Sequence	2 bytes
	Length of a MAC Header	6 bytes + EHDR

The HCS field is a 16-bit CRC that ensures the integrity of the MAC Header, even in a collision environment. The HCS field coverage MUST include the entire MAC Header, starting with the FC field and including any EHDR field that may be present. The HCS is calculated using CRC-CCITT ($x^{16} + x^{12} + x^5 + 1$) as defined in [ITU-T X.25].
The FC field is broken down into the FC_TYPE sub-field, FC_PARM sub-field and an EHDR_ON indication flag. The format of the FC field MUST be as shown in Table 0-2.

Table 0-2. FC Field Format

FC Field	Usage	Size
FC_TYPE	MAC Frame Control Type field: 00: Packet PDU MAC Header 01: ATM PDU MAC Header 10: Reserved PDU MAC Header 11: MAC Specific Header	2 bits
FC_PARM	Parameter bits, use dependent on FC_TYPE.	5 bits
EHDR_ON	When = 1, indicates that EHDR field is present. [Length of EHDR (ELEN) determined by MAC_PARM field]	1 bit

The FC_TYPE sub-field is the two MSBs of the FC field. These bits MUST always be interpreted in the same manner to indicate one of four possible MAC frame formats. These types include: MAC Header with Packet PDU; MAC Header with ATM cells; MAC Header reserved for future PDU types; or a MAC Header used for specific MAC control purposes. These types are spelled out in more detail in the remainder of this section.

The five bits following the FC_TYPE sub-field is the FC_PARM sub-field. The use of these bits are dependent on the type of MAC Header. The LSB of the FC field is the EHDR_ON indicator. If this bit is set, then an Extended Header (EHDR) is present. The EHDR provides a mechanism to allow the MAC Header to be extensible in an interoperable manner.

The Transmission Convergence Sublayer stuff-byte pattern is defined to be a value of 0xFF. This precludes the use of FC byte values which have FC_TYPE = ‘11’ and FC_PARM = ‘11111’.

The MAC_PARM field of the MAC Header serves several purposes depending on the FC field. If the EHDR_ON indicator is set, then the MAC_PARM field MUST be used as the Extended Header length (ELEN). The EHDR field MAY vary from 0 to 255 bytes. If this is a concatenation MAC Header, then the MAC_PARM field represents the number of MAC frames (CNT) in the concatenation (see Section 0). If this is a Request MAC Header (REQ) (see Section 0), then the MAC_PARM field represents the amount of bandwidth being requested. In all other cases, the MAC_PARM field is reserved for future use.

The third field has two possible uses. In most cases, it indicates the length (LEN) of this MAC frame. In one special case, the Request MAC Header, it is used to indicate the cable modem’s Service ID since no PDU follows the MAC Header.

The Extended Header (EHDR) field provides extensions to the MAC frame format. It is used to implement data link security and can be extended to add support for additional functions in future releases. Initial implementations SHOULD pass this field to the processor. This will allow future software upgrades to take advantage of this capability. (Refer to Section 0 “6.2.6 Extended MAC Headers” for details.)

6.2.1.5 Data PDU

The MAC Header MAY be followed by a Data PDU. The type and format of the Data PDU is defined in the Frame Control field of the MAC Header. The FC field explicitly

defines a Packet Data PDU, an ATM Data PDU, a MAC Header only frame (no PDU) and a reserved code point (used as an escape mechanism for future extensions). All CMs MUST use the length in the MAC Header to skip over any reserved data.

6.2.2 Packet-Based MAC Frames

6.2.2.1 Variable-Length Packets

The MAC sublayer MUST support a variable-length Ethernet/[ISO8802-3]-type Packet Data PDU. The Packet PDU MAY be passed across the network in its entirety, including its original CRC. A unique Packet MAC Header is appended to the beginning. The frame format without an Extended header MUST be as shown in Figure 0-4 and Table 0-3.

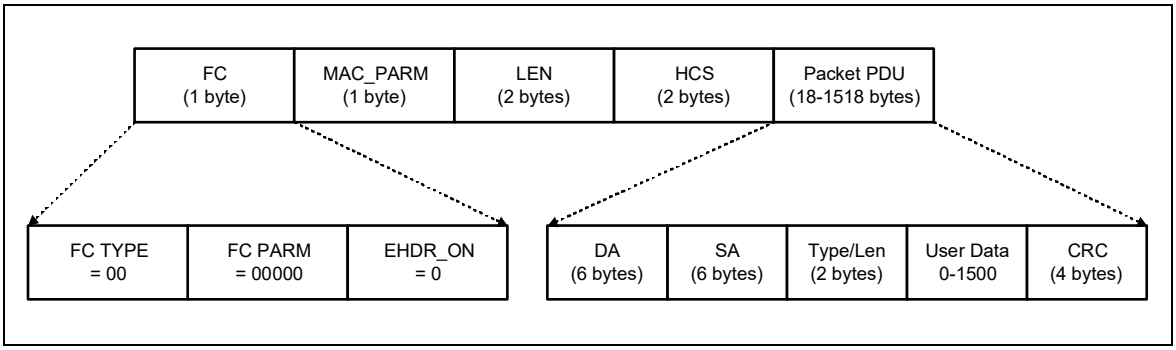

Figure 0-4. Ethernet/802.3 Packet PDU Format

Table 0-3. Packet PDU Format

Field	Usage	Size
FC	FC_TYPE = 00; Packet MAC Header FC_PARM[4] = Data Link Encryption (DLE). If 1 then a security header for data link encryption is present (Section 0). If zero then no security header is present. FC_PARM[3:0] = 000; other values reserved for future use and ignored EHDR_ON = 0; no EHDR present this example	8 bits
MAC_PARM	Reserved, MUST be set to zero if there is no EHDR; otherwise set to length of EHDR	8 bits
LEN	LEN = n; length of Packet PDU in bytes	16 bits
EHDR	Extended MAC Header not present in this example	0 bytes
HCS	MAC Header Check Sequence	2 bytes
Packet Data	Packet PDU: DA - 48 bit Destination Address SA - 48 bit Source Address Type/Len - 16 bit Ethernet Type or [ISO8802-3] Length Field User Data (variable length, 0-1500 bytes) CRC - 32-bit CRC over packet PDU (as defined in Ethernet/[ISO8802-3])	n bytes
	Length of Packet MAC frame	6 + n bytes

6.2.3 ATM Cell MAC Frames

ATM transport is not defined in this specification.
In order to allow current frame-based CMs to operate in a possible future downstream channel in which ATM cells and frames are mixed, a codepoint for ATM has been defined. This will allow current modems to ignore ATM cells while receiving frames. The frame format MUST be as shown in Figure 0-5 and Table 6-4.

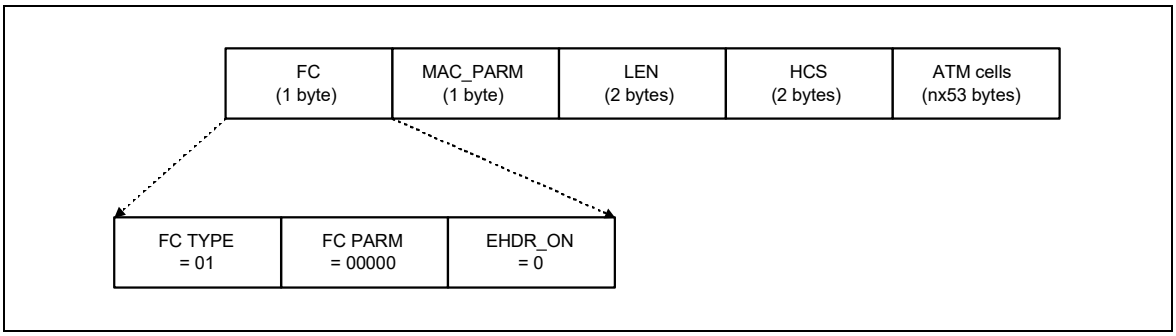

Figure 0-5. ATM Cell MAC Frame Format

Table 0-4. ATM Cell MAC Frame Format

Field	Usage	Size
FC	FC_TYPE = 01; ATM cell format MAC Header FC_PARM[4:0] = 00000; other values reserved for future use and ignored EHDR_ON = 0; no EHDR present this example	8 bits
MAC_PARM	Reserved, MUST be set to zero if there is no EHDR; otherwise set to length of EHDR	8 bits
LEN	LEN = nx53; length of ATM cell PDU, in bytes	16 bits
EHDR	Extended MAC Header not present this example	0 bytes
HCS	MAC Header Check Sequence	2 bytes
ATM Data	ATM cell PDU	n x 53 bytes
	Length of ATM cells based MAC frame	6 + n x 53 bytes

6.2.4 Reserved PDU MAC Frames

The MAC sublayer provides a reserved FC code point to allow for support of future (to be defined) PDU formats. The FC field of the MAC Header indicates that a Reserved PDU is present. This PDU MUST be silently discarded by MAC implementations of this version (1.0) of the specification. Compliant version 1.0 implementations MUST use the length field to skip over the Reserved PDU.
The format of the Reserved PDU without an extended header MUST be as shown in Figure 0-6 and
Table 0-5.

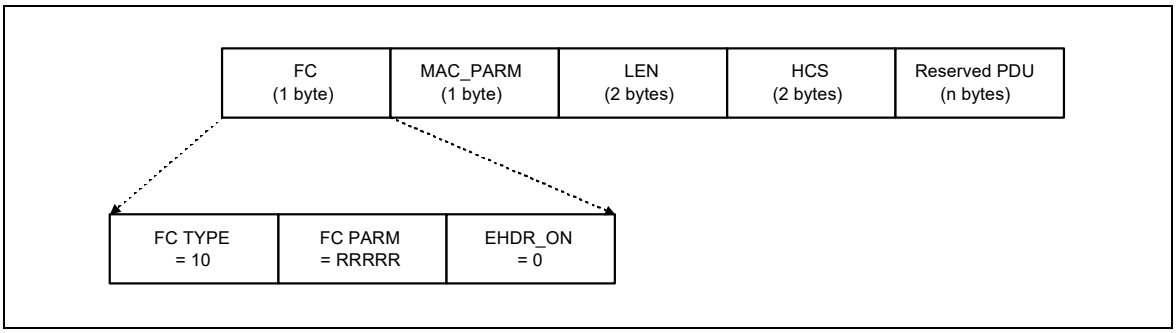

Figure 0-6. Reserved PDU Format

Table 0-5. Reserved PDU Format

Field	Usage	Size
FC	FC_TYPE = 10; Reserved PDU MAC Header FC_PARM[4:0]; reserved for future use EHDR_ON = 0; no EHDR present this example	8 bits
MAC_PARM	Reserved for future use	8 bits
LEN	LEN = n; length of Reserved PDU in bytes	16 bits
EHDR	EHDR = 0; Extended MAC Header not present this example	0 bytes
HCS	MAC Header Check Sequence	2 bytes
User Data	Reserved Data PDU	n bytes
	Length of a Reserved PDU MAC frame	6 + n bytes

6.2.5 MAC-Specific Headers

There are several MAC Headers which are used for very specific functions. These functions include support for downstream timing and upstream ranging/power adjust, requesting bandwidth and concatenating multiple MAC frames.

6.2.5.1 Timing Header

A specific MAC Header is identified to help support the timing and adjustments required. In the downstream, this MAC Header MUST be used to transport the Global Timing Reference to which all cable modems synchronize. In the upstream, this MAC Header MUST be used as part of the Ranging message needed for a cable modem's timing and power adjustments. The Timing MAC Header is followed by a Packet Data PDU. The format MUST be as shown in Figure 0-7 and Table 0-6.

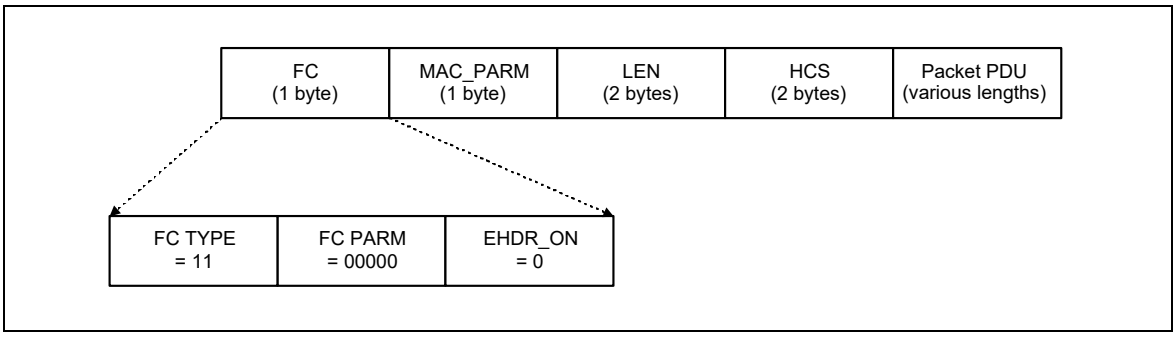

Figure 0-7. Timing MAC Header

Table 0-6. Timing MAC Header Format

Field	Usage	Size
FC	FC_TYPE = 11; MAC Specific Header FC_PARM[4:0] = 00000; Timing MAC Header EHDR_ON = 0; extended header prohibited for SYNC and RNG-REQ	8 bits
MAC_PARM	Reserved for future use	8 bits
LEN	LEN = n; length of Packet PDU in bytes	16 bits
EHDR	Extended MAC Header not present	0 bytes
HCS	MAC Header Check Sequence	2 bytes
Packet Data	MAC Management message: SYNC message (downstream only) RNG-REQ (upstream only)	n bytes
	Length of Timing Message MAC frame	6 + n bytes

6.2.5.2 MAC Management Header

A specific MAC Header is identified to help support the MAC management messages required. This MAC Header MUST be used to transport all MAC management messages (refer to Section 0). The format MUST be as shown Figure 0-8 and Table 0-7.

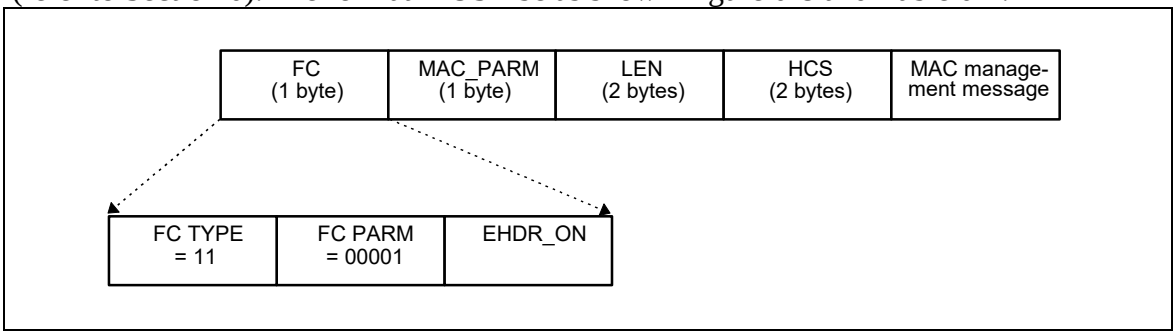

Figure 0-8. Management MAC Header

Table 0-7. Management MAC Header Format

Field	Usage	Size
FC	FC_TYPE = 11; MAC Specific Header FC_PARM[4:0] = 00001 EHDR_ON	8 bits
MAC_PARM	Reserved for future use	8 bits
LEN	LEN = n; length of Packet PDU in bytes	16 bits
EHDR	Extended MAC Header not present this example	0 bytes
HCS	MAC Header Check Sequence	2 bytes
Packet Data	MAC Management message:	n bytes
	Length of Management MAC frame	6 + n bytes + EHDR

6.2.5.3 Request MAC Header

The Request MAC Header is the basic mechanism that a cable modem uses to request bandwidth. As such, it is only applicable in the upstream There MUST be no Data PDUs following the Request MAC Header. The general format of the Request MUST be as shown in Figure 0-9 and Table 0-8.

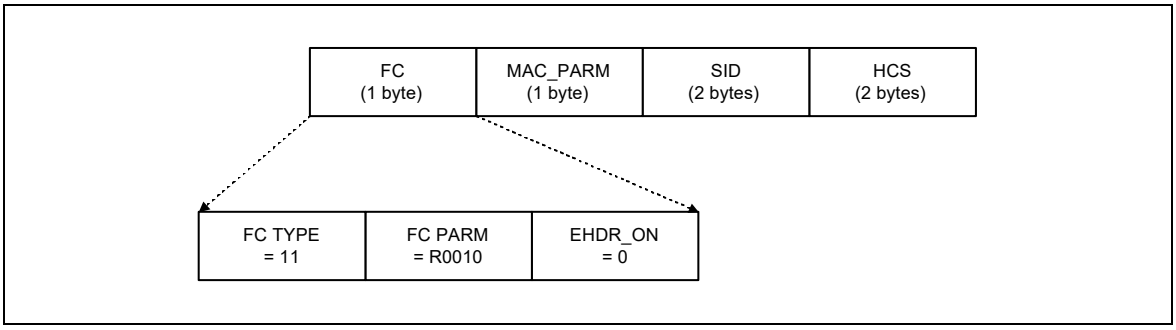

Figure 0-9. Request MAC Header Format

Table 0-8. Request MAC Header (REQ) Format

Field	Usage	Size
FC	FC_TYPE = 11; MAC-Specific Header FC_PARM[3:0] = 0010; MAC Header only; no data PDU following FC_PARM[4] indicates if REQ is in mini-slots or ATM cells [4] = 0; mini-slot REQ [4] = 1; ATM cell REQ EHDR_ON = 0; no EHDR allowed	8 bits
MAC_PARM	REQ, total amount of bandwidth requested (upstream only): if FC_PARM [4] = 0; REQ is number of mini-slots if FC_PARM [4] = 1; REQ is number of ATM cells	8 bits
SID	Service ID (0 ...0x3FFF)	16 bits
EHDR	Extended MAC Header not allowed	0 bytes
HCS	MAC Header Check Sequence	2 bytes
	Length of a REQ MAC Header	6 bytes

Because the Request MAC Header does not have a Data PDU following it, the LEN field is not needed. The LEN field MUST be replaced with an SID. The SID MUST uniquely identify a particular service queue within a given station.
The bandwidth request, REQ, MUST be specified in either mini-slots or in ATM cells. The REQ field MUST indicate the current total amount of bandwidth requested for this service queue.

6.2.5.4 Concatenation

A Specific MAC Header is defined to allow multiple MAC frames to be concatenated. This allows a single MAC "burst" to be transferred across the network. The PHY overhead and the Concatenation MAC Header only occur once. Concatenation of multiple MAC frames MUST be as shown in Figure 0-10.
A compliant CMTS & CM MAY support concatenation.
Note: If concatenation is supported, it must be supported on both the upstream and downstream.

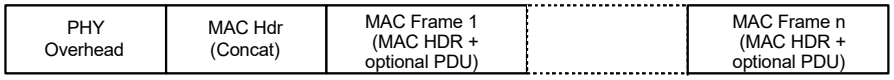

Figure 0-10. Concatenation of Multiple MAC Frames

Only one Concatenation MAC Header MUST be present per MAC "burst." Nested concatenation MUST NOT be allowed. Immediately following the Concatenation MAC Header MUST be the MAC Header of the first MAC frame. Information within the MAC Header indicates the length of the first MAC Frame and provides a means to find the start of the next MAC Frame. Each MAC frame within a concatenation MUST be unique and MAY be of any type. This means that Packet, ATM, Reserved PDU and MAC-specific Frames MAY be mixed together. The embedded MAC frames MAY be addressed to different destinations and MUST be delivered as if they were transmitted individually.

The format of the Concatenation MAC Header MUST be as shown in Figure 0-11 and Table 0-9.

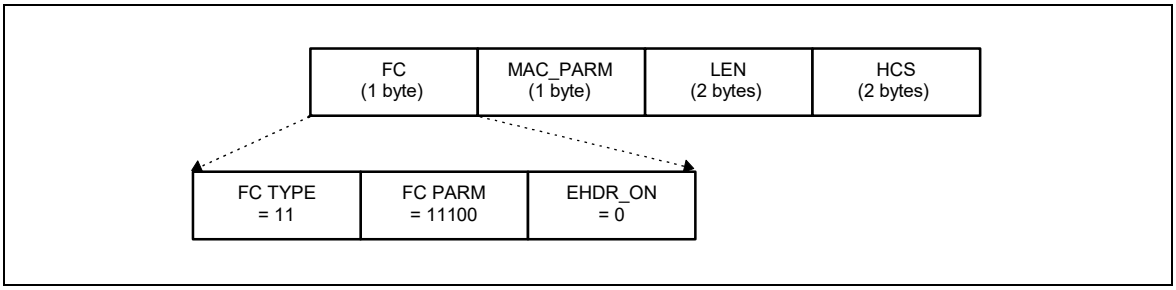

Figure 0-11. Concatenation MAC Header Format

Table 0-9. Concatenated MAC Frame Format

Field	Usage	Size
FC	FC_TYPE = 11; MAC Specific Header FC_PARM[4:0] = 11100; Concatenation MAC Header EHDR_ON = 0; no EHDR with Concatenation Header	8 bits
MAC_PARM	CNT, number of MAC frames in this concatenation CNT = 0 indicates unspecified number of MAC frames	8 bits
LEN	LEN = x + . . . + y; length of all following MAC frames in bytes	16 bits
EHDR	Extended MAC Header MUST NOT be used	0 bytes
HCS	MAC Header Check Sequence	2 bytes
MAC frame 1	first MAC frame: MAC Header plus OPTIONAL data PDU	x bytes
MAC frame n	last MAC frame: MAC Header plus OPTIONAL data PDU	y bytes
	Length of Concatenated MAC frame	6 + LEN bytes

The MAC_PARM field MUST be used to indicate the total count of MAC frames (CNT) in this concatenation burst. If the count equals zero, then there is an unspecified number of MAC frames. The LEN field indicates the length of the entire concatenation. This is slightly different than the LEN field within an individual MAC Header which only indicates the length of that MAC frame.

6.2.6 Extended MAC Headers

Every MAC Header, except the Timing, Concatenation MAC Header and Request Frame, has the capability of defining an Extended Header field (EHDR). The presence of an EHDR field MUST be indicated by the EHDR_ON flag in the FC field being set. Whenever this bit is set, then the MAC_PARM field MUST be used as the EHDR length (ELEN). The minimum defined EHDR is 1 byte. The maximum EHDR length is 255 bytes.

A compliant CMTS & CM MUST support extended headers.

The format of a generic MAC Header with an Extended Header included MUST be as shown in Figure 0-12 and Table 0-10. Note: Extended Headers MUST NOT be used in a

Concatenation MAC Header, but MAY be included as part of the MAC Headers within the concatenation.
Extended Headers MUST NOT be used in Request and Timing MAC Headers.

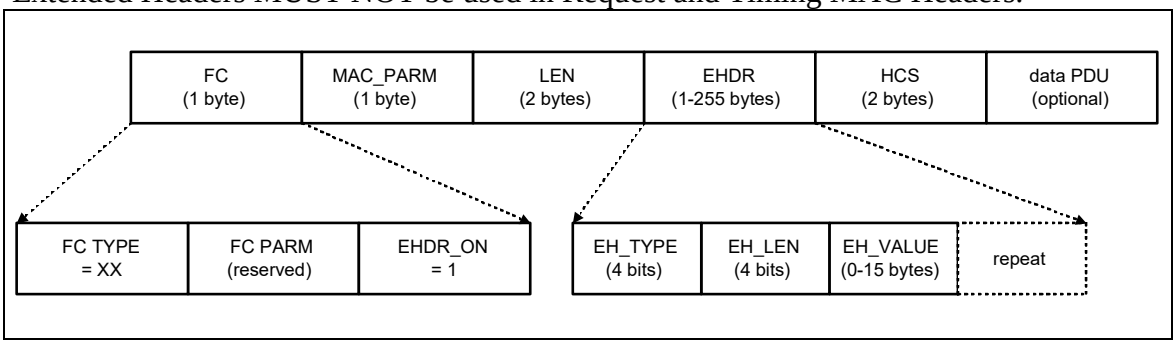

Figure 0-12. Extended MAC Format

Table 0-10. Extended Header Format

Field	Usage	Size
FC	FC_TYPE = XX; Applies to all MAC Headers FC_PARM[4:0] = XXXXX; dependent on FC_TYPE EHDR_ON = 1; EHDR present this example	8 bits
MAC_PARM	ELEN = x; length of EHDR in bytes	8 bits
LEN	LEN = x + y; length of EHDR plus OPTIONAL data PDU in bytes	16 bits
EHDR	Extended MAC Header present this example	x bytes
HCS	MAC Header Check Sequence	2 bytes
PDU	OPTIONAL data PDU	y bytes
	Length of MAC frame with EHDR	6 + x + y bytes

Since the EHDR increases the length of the MAC frame, the LEN field MUST be increased to include both the length of the Data PDU and the length of the EHDR.
The EHDR field consists of one or more EH elements. Each EH element is variable sized. The first byte of the EH element MUST contain a type and a length field. Every CM MUST use this length to skip over any unknown EH elements. The format of an EH element MUST be as shown in Table 0-11.

Table 0-11. EH Element Format

EH Element Fields	Usage	Size
EH_TYPE	EH element Type Field	4 bits
EH_LEN	Length of EH element	4 bits
EH_VALUE	EH element data	0-15 bytes

The types of EH element defined in Table 0-12 MUST be supported. Reserved and extended types are undefined at this point and SHOULD be ignored.
The first eight EH element types are intended for one-way transfer between the cable modem and the CMTS. The next seven EH element types are for end-to-end usage within

a MAC-sublayer domain. Thus, the information attached to the EHDR on the upstream MUST also be attached when the information is forwarded. The final EH element type is an escape mechanism that allows for more types and longer values, and MUST be as shown in Table 0-12.

Table 0-12. EH Element Format

EH_TYPE	EH_LEN	EH_VALUE
0	0	Null configuration setting; may be used to pad the extended header. The EH_LEN MUST be zero, but the configuration setting may be repeated.
1	3	Request: mini-slots requested (1 byte); SID (2 bytes) [CM --> CMTS]
2	2	Acknowledgment requested; SID (2 bytes) [CM --> CMTS]
3-7		Reserved [CM --> CMTS]
8	4	Virtual LAN tag [CM <-> CM][4]
10-14		Reserved [CM <-> CM]
15	XX	Extended EH element: EHX_TYPE (1 byte), EHX_LEN (1 byte), EH_VALUE (length determined by EHX_LEN)

6.2.7 Error-Handling

The cable network is a potentially harsh environment that may cause several different error conditions to occur. This section, together with Section 0, describes the procedures that are required when an exception occurs at the MAC framing level.

The most obvious type of error occurs when the HCS on the MAC Header fails. This may be a result of noise on the network or possibly by collisions in the upstream channel. Framing recovery on the downstream channel is performed by the MPEG transmission convergence sublayer. In the upstream channel, framing is recovered on each transmitted burst, such that framing on one burst is independent of framing on prior bursts. Hence, framing errors within a burst are handled by simply ignoring that burst; i.e., errors are unrecoverable until the next burst.

A second exception, which applies only to the upstream, occurs when the Length field is corrupted and the MAC thinks the frame is longer than it actually is. Synchronization will recover at the next valid upstream data interval.

For Packet PDU transmissions, a bad CRC MAY be detected. Since the CRC only covers the Data PDU and the HCS covers the MAC Header; the MAC Header is still considered valid. Thus, the Packet PDU MUST be dropped, but any pertinent information in the MAC Header (e.g., bandwidth request information) MAY be used.

6.3 MAC Management Messages

6.3.1 Message Format

MAC management messages MUST be encapsulated in an LLC unnumbered information frame per [ISO8802-2], which in turn is encapsulated within the cable network MAC

[4] The format of the 4-byte value is defined in [IEEE802.1Q]. Since 802.1Q is under development, this is subject to change to follow that standard.

framing, as shown in Figure 0-13. Figure 0-13 shows the MAC Header and MAC management header fields which are common across all MAC Messages.

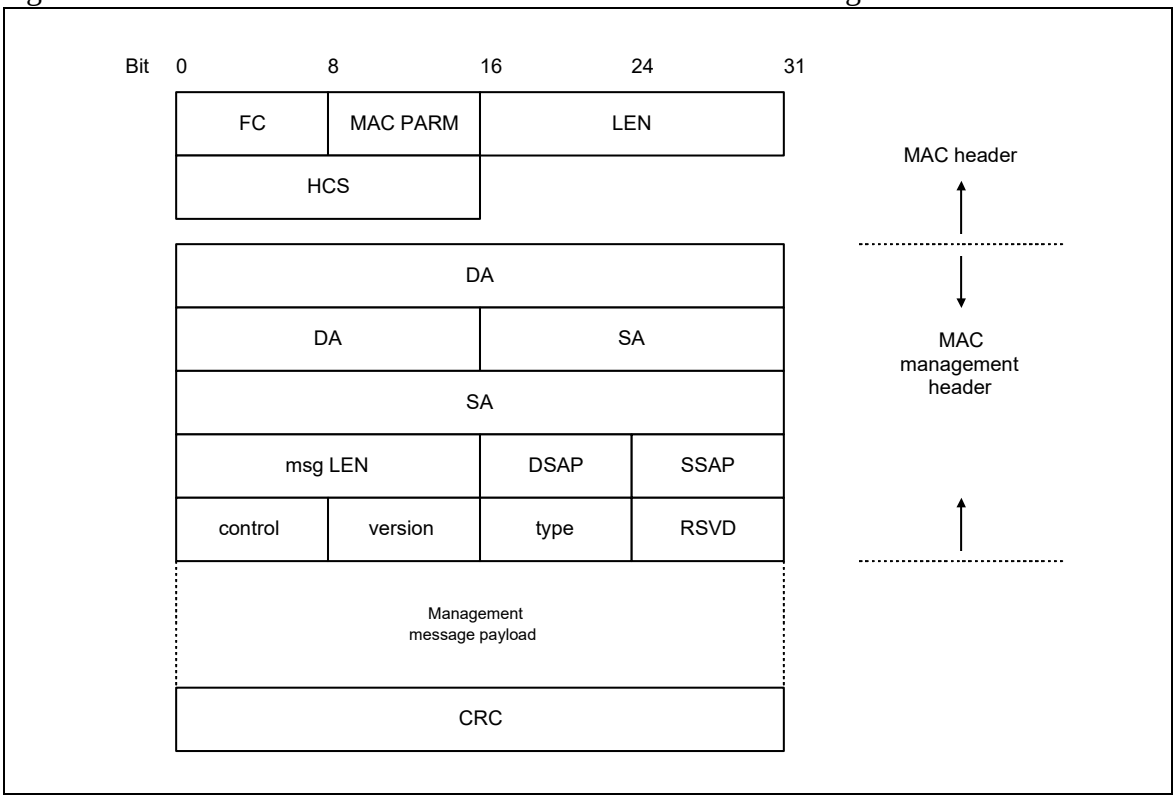

Figure 0-13. MAC Header and MAC Management Header Fields

The fields MUST be as defined below.

FC, MAC PARM, LEN, HCS Common MAC frame header -refer to Section 0 for details. All messages use a MAC-specific header.

Destination Address (DA) MAC management frames will be addressed to a specific CM unicast address or to the MCNS management multicast address. These MCNS MAC management addresses are described in Appendix A.

Source Address (SA) The MAC address of the source CM or CMTS system.

Msg Length The total length of the MAC message from DA to CRC inclusive.

DSAP The LLC null SAP (00) as defined by [ISO8802-2].

SSAP The LLC null SAP (00) as defined by [ISO8802-2].

Control Unnumbered information frame (03) as defined by [ISO8802-2].

Version 1 octet
This field defines the version of the MAC management protocol in use. Set to 1 for this version.

Type 1 octet
This field defines the type of this particular MAC management message.

Type value	Message Name	Message Description
1	SYNC	timing synchronization
2	UCD	upstream channel descriptor
3	MAP	upstream bandwidth allocation
4	RNG-REQ	ranging request
5	RNG-RSP	ranging response
6	REG-REQ	registration request
7	REG-RSP	registration response
8	UCC-REQ	upstream channel change request
9	UCC-RSP	upstream channel change response
10-255		reserved for future use

RSVD 1 octet
This field is used to align the message payload on a 32 bit boundary.
Set to 0 for this version.

Management Message Payload variable length
As defined for each specific management message.

CRC Covers message including header fields (DA, SA,…).
Polynomial
defined by [ISO8802-3].

6.3.2 MAC Management Messages

A compliant CMTS or CM MUST support the following management message types.

6.3.2.1 Time Synchronization (SYNC)

Time Synchronization (SYNC) MUST be transmitted by CMTS at a periodic interval to establish MAC sublayer timing. This message MUST use an FC field of type: Timing. This MUST be followed by a Packet PDU in the format shown in Figure 0-14.

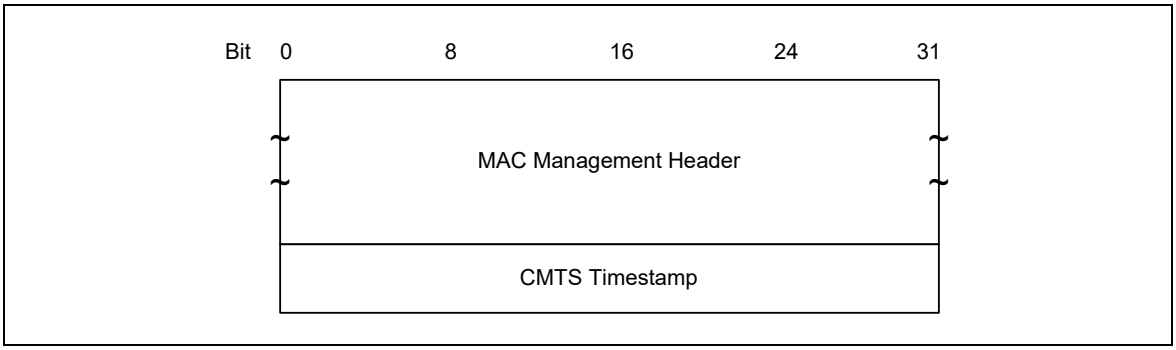

Figure 0-14. Format of Packet PDU Following the Timing Header

The parameters shall be as defined below.

CMTS Timestamp An incrementing 32-bit timestamp based on a timebase reference clock at the CMTS. Units are in 1/64th of a Timebase Tick (i.e., 6.25/64 μs[5]).

6.3.2.2 Upstream Channel Descriptor (UCD)

An Upstream Channel Descriptor MUST be transmitted by the CMTS at a periodic interval to define the characteristics of an upstream channel (Figure 6-15). A separate message MUST be transmitted for each active upstream.

To provide for flexibility the message parameters following the channel ID MUST be encoded in a type/length/value (TLV) form in which the type and length fields are each 1 octet long. Using this encoding, new parameters MAY be added which not all CMs can interpret. A CM which does not recognize a parameter type MUST skip over this parameter and MUST NOT treat the event as an error condition.

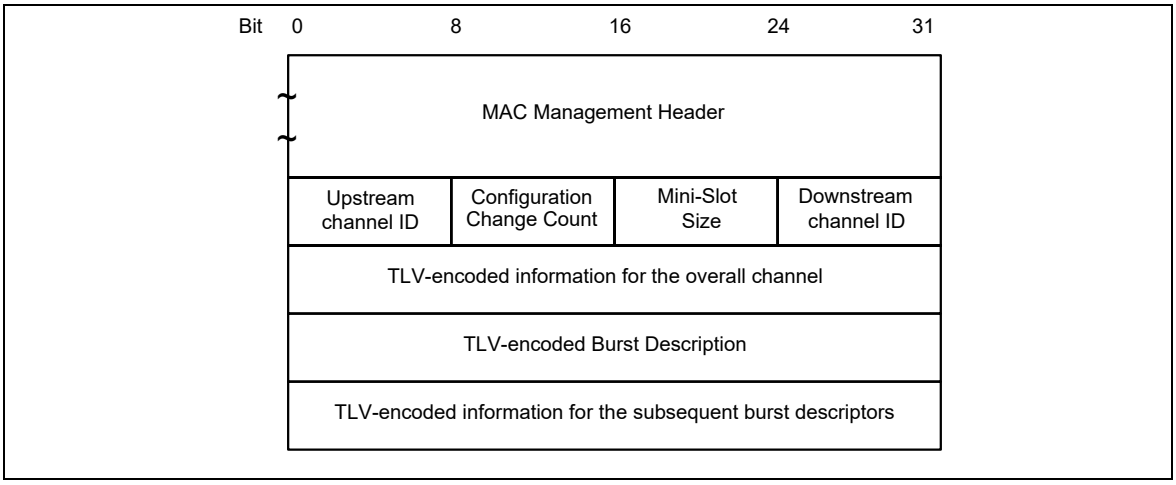

Figure 0-15. Upstream Channel Descriptor

A CMTS MUST generate UCDs in the format shown in Figure 0-15, including all of the following parameters:

Configuration Change Count Incremented by one (modulo the field size) by the CMTS whenever any of the values of this channel descriptor change. If the value of this count in a subsequent UCD remains the same, the CM can quickly decide that the remaining fields have not changed, and may be able to disregard the remainder of the message. This value is also referenced from the MAP.

Mini-Slot Size The size of the Mini-Slot for this upstream channel in units of the Timebase Tick (see SYNC message).

upstream channel ID The identifier of the upstream channel to which this message refers. This identifier is arbitrarily chosen by the CMTS and is only unique within the MAC-Sublayer domain.

[5] Since the SYNC message applies to all upstream channels within this MAC domain, units were chosen to be independent of the symbol rate of any particular upstream channel. A timebase tick represents the smallest possible mini-slot at the highest possible symbol rate. See section 0 for time-unit relationships.

downstream channel ID The identifier of the downstream channel on which this message has been transmitted. This identifier is arbitrarily chosen by the CMTS and is only unique within the MAC-Sublayer domain.

All other parameters are coded as TLV tuples. Channel-wide parameters (types 1-3 in Table 6-13) must precede burst descriptors (type 4 below).

Table 0-13. Channel TLV Parameters

Name	Type (1 byte)	Length (1 byte)	Value (Variable length)
Symbol Rate	1	1	1-32; multiples of base rate of 160 ksym/sec
Frequency	2	4	Upstream center frequency (Hz)
Preamble Pattern	3	1-128	Preamble superstring. All burst-specific preamble values are chosen as bit-substrings of this string.
Burst Descriptor	4		May appear more than once; described below. The length is the number of bytes in the overall object, including embedded TLV items.

Burst Descriptors are compound TLV encodings that define, for each type of upstream usage interval, the physical-layer characteristics that are to be used during that interval. The upstream interval usage codes are defined in the MAP message (see Section 0 and Table 0-15).

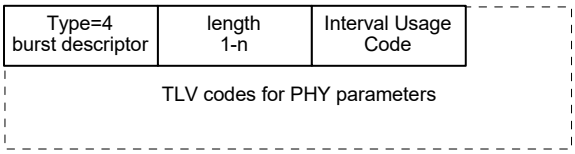

Figure 0-16. Top-Level Encoding for a Burst Descriptor

A Burst Descriptor MUST be included for each interval usage code that is to be used in the allocation MAP. The interval usage code above must be one of the values from Table 0-15.

Within each Burst Descriptor is an unordered list of Physical-layer attributes, encoded as TLV values. These attributes are shown in Table 0-14.

Table 0-14. Upstream Physical-Layer Burst Attributes

Name	Type (1 byte)	Length (1 byte)	Value (Variable Length)
Modulation Type	1	1	1 = QPSK, 2 = 16QAM
Differential Encoding	2	1	1 = on, 2 = off
Preamble Length	3	2	Up to 1024 bits. The value must be an integral number of symbols (a multiple of 2 for QPSK and 4 for 16QAM)
Preamble Value Offset	4	2	Identifies the bits to be used for the preamble value. This is specified as a starting offset into the Preamble Pattern (see Table 0-13). That is, a value of zero means that the first bit of the preamble for this burst type is the value of the first bit of the Preamble Pattern. A value of 100 means that the preamble is to use the 101st and succeeding bits from the Preamble Pattern. This value must be a multiple of the symbol size.
FEC Error Correction (T bytes)	5	1	0-10 bytes. Zero implies no Forward Error Correction.
FEC Codeword Length (k)	6	1	Fixed: 1 to 255 Shortened: 16 to 255
Scrambler Seed	7	2	The 15-bit seed value.
Maximum Burst Size	8	1	The maximum number of mini-slots that can be transmitted during this burst type. Absence of this configuration setting implies that the burst size is limited elsewhere. This value MUST be used when the interval type is Short Data Grant.
Guard Time Size	9	1	Number of symbol times which must follow the end of this burst. (Although this value may be derivable from other network and architectural parameters, it is included here to ensure that the CMs and CMTS all use the same value.)
Last Codeword Length	10	1	1 = fixed; 2 = shortened
Scrambler on/off	11	1	1 = on; 2 = off

6.3.2.2.1 Example of UCD Encoded TLV data

An example of UCD encoded TLV data is given in Table 0-17.

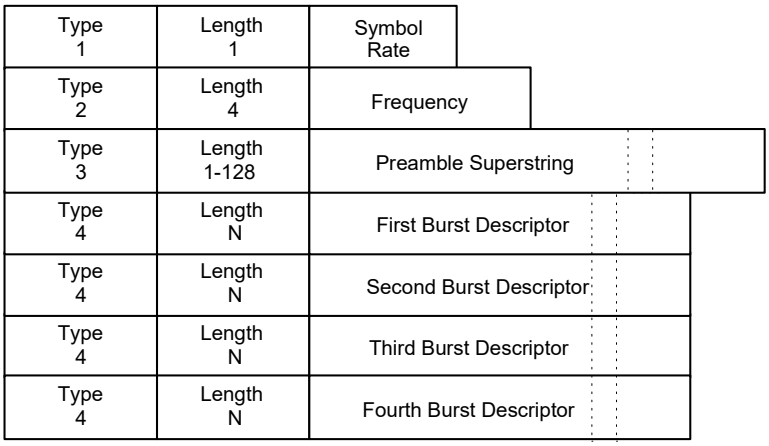

Figure 0-17. Example of UCD Encoded TLV Data

6.3.2.3 Upstream Bandwidth Allocation Map (MAP)

A CMTS MUST generate MAPs in the format shown in Figure 0-18.

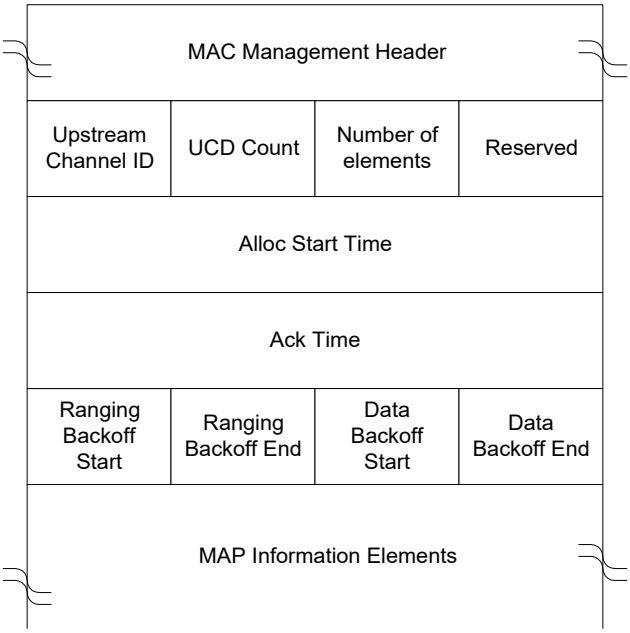

Figure 0-18. MAP Format

The parameters MUST be as follows:

Channel ID The identifier of the upstream channel to which this message refers.

UCD Count Matches the value of the Configuration Change Count of the UCD which describes the burst parameters which apply to this map. See Section 0.

Number Elements Number of information elements in the map

RSVD Reserved field for alignment

Alloc Start time	Effective start time from CMTS initialization (in mini-slots) for assignments within this map
Ack time	Latest time, from CMTS initialization, (mini-slots) processed in upstream that generated a Grant, Grant Pending or Data Ack
Ranging Backoff Start	Initial back-off window for initial ranging contention, expressed as a power of two. Values range 0-15.
Ranging Backoff End	Final back-off window for initial ranging contention, expressed as a power of two. Values range 0-15.
Data Backoff Start	Initial back-off window for contention data and requests, expressed as a power of two. Values range 0-15.
Data Backoff End	Final back-off window for contention data and requests, expressed as a power of two. Values range 0-15.
MAP information elements	MUST be in the format defined in Figure 0-19 and Table 0-15. Values for IUCs are defined in Table 0-15 and are described in detail in Section 0.

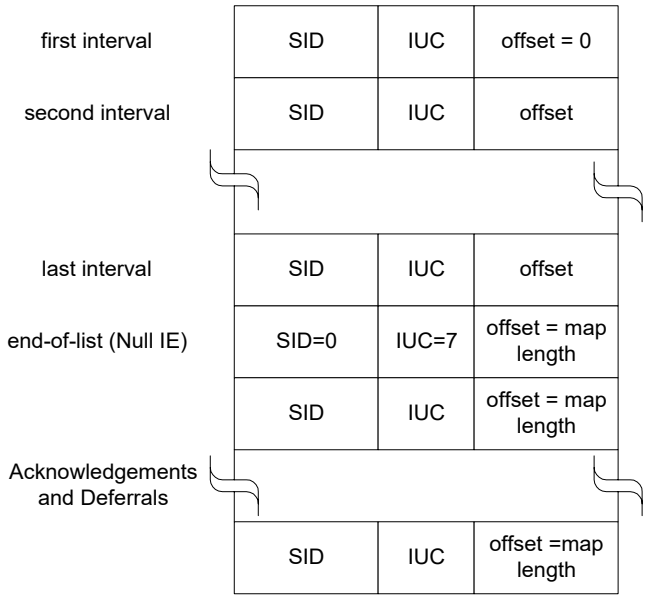

Figure 0-19. MAP Information Element Structure

Table 0-15. Allocation MAP Information Elements (IE)

IE Name	Interval Usage Code (IUC) (4 bits)	SID (14 bits)	Mini-slot Offset (14 bits)
Request	1	any	starting offset of REQ region
REQ/Data (refer to Appendix A for multi-cast definition)	2	multicast	starting offset of IMMEDIATE Data region well-known multicasts define start intervals
Initial Maintenance	3	broadcast/ multicast	starting offset of MAINT region (used in Initial Ranging)
Station Maintenance[6]	4	unicast	starting offset of MAINT region (used in Periodic Ranging)
Short Data Grant[7]	5	unicast	starting offset of Data Grant assignment; if inferred length = 0, then it is a Data Grant pending.
Long Data Grant	6	unicast	starting offset of Data Grant assignment; if inferred length = 0, then it is a Data Grant Pending
Null IE	7	zero	ending offset of the previous grant. Used to bound the length of the last actual interval allocation.
Data Ack	8	unicast	CMTS sets to 0
Reserved	9-14	any	reserved
Expansion	15	expanded IUC	# of additional 32-bit words in this IE

6.3.2.4 Ranging Request (RNG-REQ)

A Ranging Request MUST be transmitted by a CM at initialization and periodically on request from CMTS to determine network delay. This message MUST use an FC field of type: Timing. This MUST be followed by a Packet PDU in the format shown in Figure 0-20.

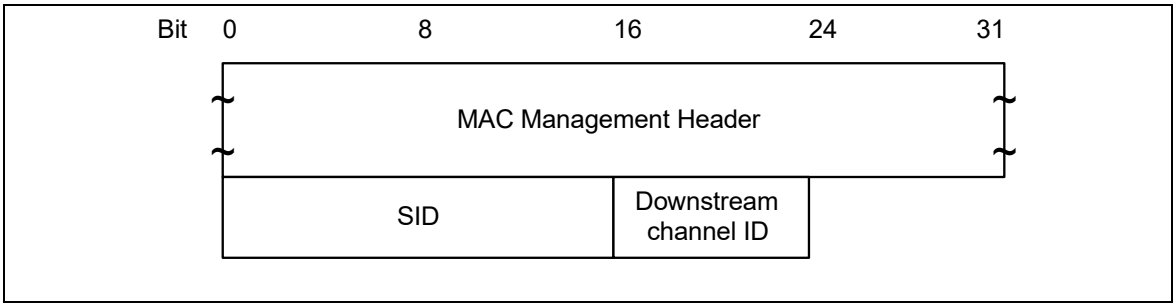

Figure 0-20. Packet PDU Following the Timing Header

Parameters MUST be as follows:

[6] Although the distinction between Initial Maintenance and Station Maintenance is unambiguous from the Service ID type, separate codes are used to ease physical-layer configuration (see burst descriptor encodings, Table 0-14).

[7] The distinction between long and short data grants is related to the amount of data that can be transmitted in the grant. A short data grant interval may use FEC parameters that are appropriate to short packets while a long data grant may be able to take advantage of greater FEC coding efficiency.

SID Initialization SID or assigned SID for periodic requests (this is a 16-bit field of which the lower 14 bits define the SID with
bits 14,15 defined to be 0)

Downstream channel ID The identifier of the downstream channel on which the CM received the UCD which described this upstream.
This is an 8-bit field.

6.3.2.5 Ranging Response (RNG-RSP)

A Ranging Response MUST be transmitted by a CMTS in response to received RNG-REQ in the format shown in Figure 0-21. The state machines describing the ranging procedure appear in Section 0. In that procedure it may be noted that, from the point of view of the CM, reception of a Ranging Response is stateless. In particular, the CM MUST be prepared to receive a Ranging Response at any time, not just following a Ranging Request.

To provide for flexibility, the message parameters following the Upstream Channel ID MUST be encoded in a type/length/value (TLV) form. Using this encoding, new parameters MAY be added which not all CMs can interpret. A CM which does not recognize a parameter type MUST simply skip over this parameter and MUST NOT treat the event as an error condition.

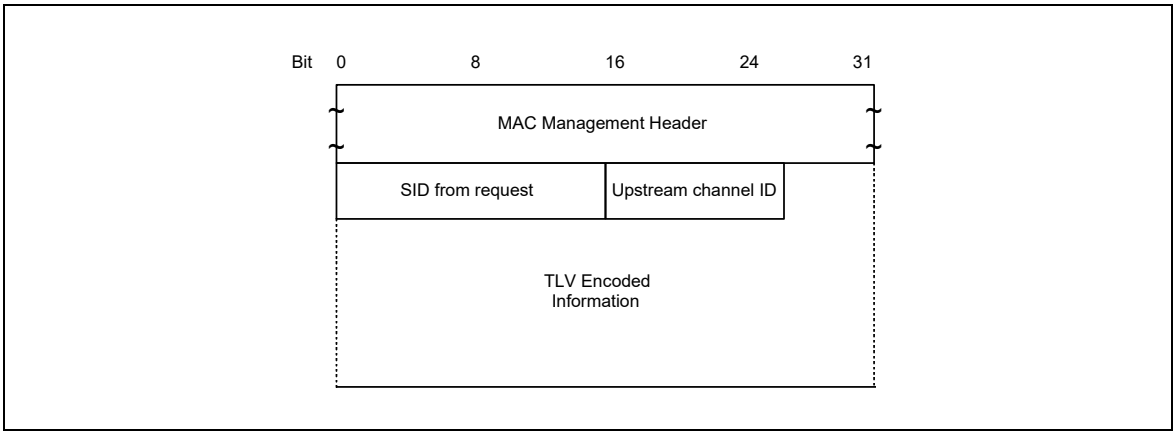

Figure 0-21. Ranging Response

Parameters MUST be as follows:

SID SID from corresponding RNG-REQ to which this response refers

Upstream channel ID The identifier of the upstream channel on which the CMTS received the RNG-REQ to which this response refers.

Timing adjust information The time by which to offset frame transmission so that frames arrive at the expected mini-slot time at the CMTS.

Power adjust information Specifies the relative change in transmission power level that the CM is to make in order that transmissions arrive at the CMTS at the desired power.

Frequency adjust information Specifies the relative change in transmission frequency that the CM is to make in order to better match the

	CMTS. (This is fine-frequency adjustment within a channel, not re-assignment to a different channel)
CM transmitter equalization information	If the CM implements transmission equalization, this provides the equalization coefficients.
Ranging status	Used to indicate whether upstream messages are received within acceptable limits by CMTS

6.3.2.5.1 Encodings

The type values used MUST be those defined in Table 0-16 and Figure 0-22. These are unique within the ranging response message but not across the entire MAC message set. The type and length fields MUST each be 1 octet in length.

Table 0-16. Ranging Response Message Encodings

Name	Type (1 byte)	Length (1 byte)	Value (Variable Length)
Timing Adjust	1	4	TX timing offset adjustment (signed 16-bit, units of (6.25 microsec/64))
Power Level Adjust	2	1	TX Power offset adjustment (signed 8-bit, 1/4-dB units)
Offset Frequency Adjust	3	2	TX frequency offset adjustment (signed 16-bit, Hz units)
Transmit Equalization Adjust	4	n	TX equalization data - see details below
Ranging Status	5	1	1 = continue, 2 = abort, 3 = success
Reserved	6-255	n	reserved for future use

type 4	length	Number of taps per symbol
number of forward taps (N)	number of reverse taps (M)	
first coefficient F_0 (real)		first coefficient F_0 (imaginary)
last coefficient F_N (real)		last coefficient F_N (imaginary)
first reverse coefficient D_0 (real)		first reverse coefficient D_0 (imaginary)
last reverse coefficient D_M(real)		last reverse coefficient D_M (imaginary)

Figure 0-22. Generalized Decision Feedback Equalization Coefficients

The total number of taps per symbol MUST be in the range 1 to 4.
The total number of taps MAY range up to 64. Each tap consists of a real and imaginary coefficient entry in the table.
If more than 255 bytes are needed to represent equalization information, then several type-4 elements MAY be used. Data MUST be treated as if byte-concatenated, that is, the first byte after the length field of the second type-4 element is treated as if it immediately followed the last byte of the first type-4 element.
The coefficients that are sent to the CM are actually coefficients of a CMTS demodulator equalizer, which, after acquisition, will have tap values which represent the channel distortion. Figure 0-23 defines these taps. After receiving these tap values, the CM must decide the best way to use this information to configure its transmit equalizer. This is a vendor-specific issue which is not described here.
Other equalization methods may be devised in the future. If so, they will use a different type-value so that this element is not overloaded.

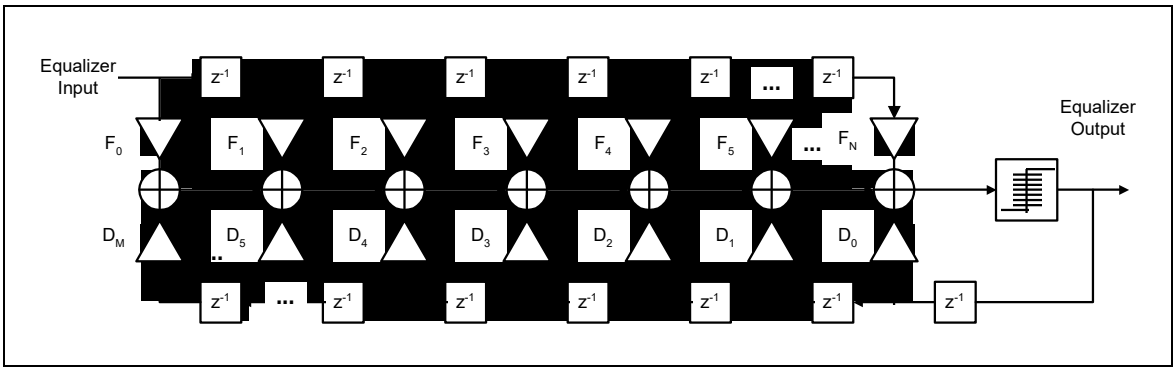

Figure 0-23. CMTS Demodulator Equalizer Tap Location Definition

6.3.2.5.2 Example of TLV Data

An example of TLV data is given in Figure 0-24.

Type 1	Length 4	Timing adjust
Type 2	Length 1	Power adjust
Type 3	Length 2	Frequency adjust information
Type 4	Length x	x bytes of CM transmitter equalization information
Type 5	Length 1	Ranging status

Figure 0-24. Example of TLV Data

6.3.2.6 Registration Request (REG-REQ)

A Registration Request, in the format shown in Figure 0-25, MUST be transmitted by a CM at initialization after receipt of a CM parameter file.

To provide for flexibility, the message parameters following the SID MUST be encoded in a type/length/value form. Using this encoding, new parameters MAY be added which not all CMTSs can interpret. A CMTS which does not recognize a parameter type MUST simply skip over this parameter and MUST not treat the event as an error condition.

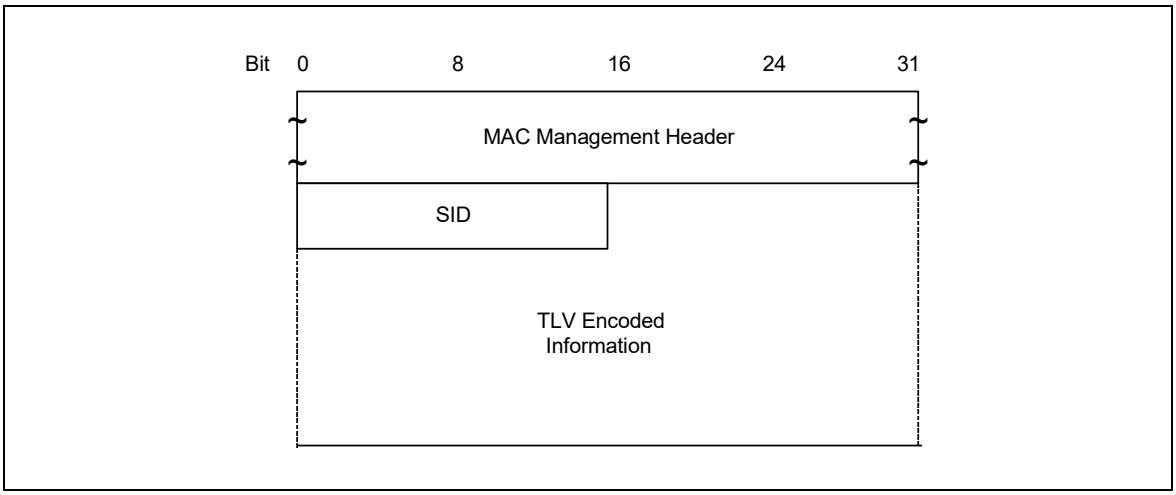

Figure 0-25. Registration Request

Parameters MUST be as follows:

SID Initialization SID for this CM

Configuration Settings for this modem As defined in Appendix C

- Downstream Frequency Configuration Setting
- Upstream Channel ID Configuration Setting
- Network Access Configuration Setting
- Class of Service Configuration Setting
- Modem Capabilities Configuration Setting
- Modem IP address

Note: The CM MUST be capable of supporting these standard configuration settings.

Vendor-specific data As defined in Appendix C

- Vendor ID Configuration Setting (vendor ID of CM)
- Vendor-specific extensions

Message Integrity Checks As defined in Appendix C

- CM MIC Configuration Setting
- CMTS MIC Configuration Setting

Note: The CM MUST forward the vendor-specific data to the CMTS in the same order in which they were received in the configuration file, to allow the message integrity check to be performed.

6.3.2.6.1 Encodings

The type values used are unique within the registration request message but not across the entire MAC message set. They MUST be those defined in Appendix C.

Note: The CM MUST forward the vendor specific configuration settings to the CMTS in the same order in which they were received in the configuration file to allow the message integrity check to be performed.

6.3.2.6.2 Example

An example of type value encodings is given in Figure 0-26.

Type 1	Length 4	Downstream Frequency
Type 2	Length 1	Upstream channel
Type 3	Length 1	Network access
Type 4	Length 28	Service class definition class 1
Type 4	Length 28	Service class definition class 2
⋮		
Type 4	Length 28	Service class definition class n
Type 5	Length 6	Modem capabilities
Type 12	Length 4	Modem IP address
Type 8	Length 3	Vendor ID
Type 43	Length n	n bytes of vendor-specific data
Type 6	Length 16	CM message integrity check
Type 7	Length 16	CMTS message integrity check

Figure 0-26. Example of Registration Request Type Value Encodings

6.3.2.7 Registration Response (REG-RSP)

A Registration Response, in the format shown in Figure 0-27, MUST be transmitted by CMTS in response to received REG-REQ.

To provide for flexibility, the message parameters following the SID MUST be encoded in a type/length/ value form. Using this encoding, new parameters MAY be added which not all CMs can interpret. A CM which does not recognize a parameter type MUST skip over this parameter and MUST NOT treat the event as an error condition.

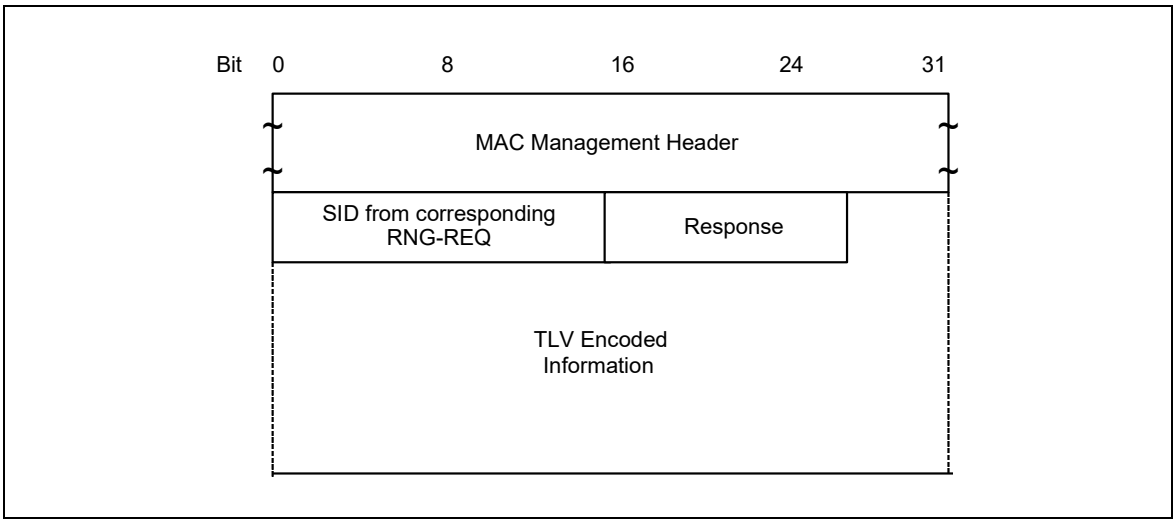

Figure 0-27. Registration Response Format

Parameters MUST be as follows:

SID from Corresponding REG-REQ	SID from corresponding REG-REQ to which this response refers
Response	0 = ok 1 = authentication failure 2 = class of service failure
Modem Capabilities	The CMTS response to the capabilities of the modem
Service Class Data	Returned when Response = ok Service ID / service class tuple for each class of service granted
Service Not Available	Returned when Response = class of service failure. If a service class cannot be supported, this configuration setting is returned in place of the service class data. If this is received, the entire registration request is considered to have failed and must be repeated.
Vendor-Specific Data	As defined in Appendix C • Vendor ID Configuration Setting (vendor ID of CMTS) • Vendor-specific extensions

Note 1. Service class IDs MUST be those requested in the corresponding REG-REQ.

Note 2. The initialization SID MUST no longer be used once the REG-RSP is received.

6.3.2.7.1 Encodings

The type values used MUST be those shown below. These are unique within the registration response message but not across the entire MAC message set. The type and length fields MUST each be 1 octet.

6.3.2.7.1.1 Modem Capabilities

This field defines the CMTS response to the modem capability field in the Registration Request. The CMTS responds to the modem capabilities to indicate whether they may be

used. If the CMTS does not recognize a modem capability, it must return this as “off” in the Registration Response.
Only capabilities set to “on” in the REG-REQ may be set “on” in the REG-RSP as this is the handshake indicating that they have been successfully negotiated.
Encodings are as defined for the Registration Request.

6.3.2.7.1.2 Service Class Data

This encoding defines the parameters associated with a requested class of service. It is somewhat complex in that it is composed from a number of encapsulated type/length/value fields. The encapsulated fields define the particular class of service parameters for the class of service in question. Note that the type fields defined are only valid within the encapsulated service class data configuration setting string. A single service class data configuration setting MUST be used to define the parameters for a single service class. Multiple class definitions MUST use multiple service class data configuration setting sets.

type	length	value
1	n	encoded service class data

Internal service class data encodings

Class ID

The value of the field MUST specify the identifier for the class of service to which the encapsulated string applies. This MUST be a class which was requested in the associated REG-REQ.

type	length	value
1	1	from REG-REQ

Valid Range

The class ID MUST be in the range 1 to 16.

Service ID

The value of the field MUST specify the SID associated with this service class.

type	length	value
2	2	SID

6.3.2.7.2 Registration Response Encoding Example

An example of Registration Response encoding is given in Figure 0-28.

Type 1	Length 7	Service class definition class 1
Type 1	Length 7	Service class definition class 2
⋮		
Type 1	Length 7	Service class definition class n
Type 6	Length 6	Modem capability

Figure 0-28. Example of Registration Response Encoding

6.3.2.7.3 Sample Service Class Data Encoding

Sample service class data encodings are provided in Table 0-17.

Table 0-17. Sample Service Class Data Encoding

Type	Length	VALUE (sub)type	Length	Value	Description
1	7				service class data configuration setting
		1	1	1	service class 1
		2	2	123	SID for this class
1	7				service class data configuration setting
		1	1	2	service class 2
		2	2	244	SID for this class
1	7				service class data configuration setting
		1	1	n	service class n
		2	2	345	SID for this class

6.3.2.8 Upstream Channel Change Request (UCC-REQ)

An Upstream Channel Change Request MAY be transmitted by a CMTS to cause a CM to change the upstream channel on which it is transmitting. The format of an UCC-REQ message is shown in Figure 0-29.

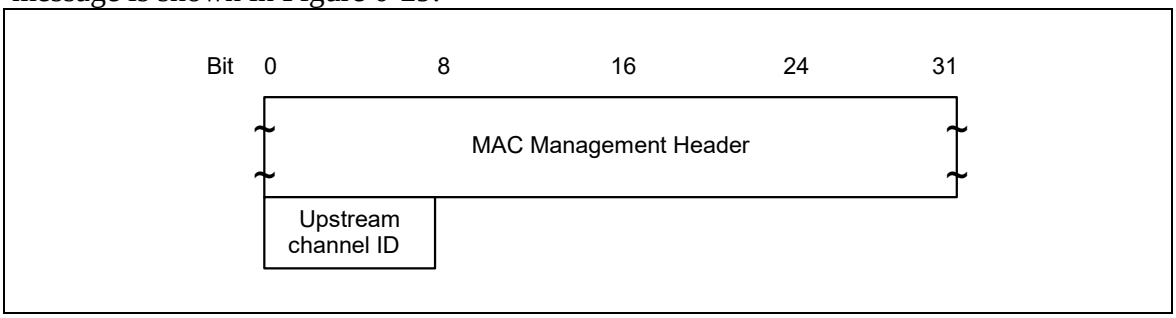

Figure 0-29. Upstream Channel Change Request

Parameters MUST be as follows:

Upstream channel ID The identifier of the upstream channel to which the CM is to switch for upstream transmissions. This is an 8-bit field.

6.3.2.9 Upstream Channel Change Response (UCC-RSP)

An Upstream Channel Change Response MUST be transmitted by a CM in response to a received Upstream Channel Change Request message to indicate that it has received and is complying with the UCC-REQ. The format of an UCC-RSP message is shown in Figure 0-30.

Before it begins to switch to a new upstream channel, a CM MUST transmit a UCC-RSP on its existing upstream channel. A CM MAY ignore an UCC-REQ message while it is in the process of performing a channel change. When a CM receives a UCC-REQ message requesting that it switch to an upstream channel that it is already using, the CM

MUST respond with a UCC-RSP message on that channel indicating that it is already using the correct channel.
To switch to a new upstream channel, a CM will begin a new ranging procedure for that channel, and upon completion of ranging will proceed without re-performing registration. The full procedure for changing channels is described in Section 0.

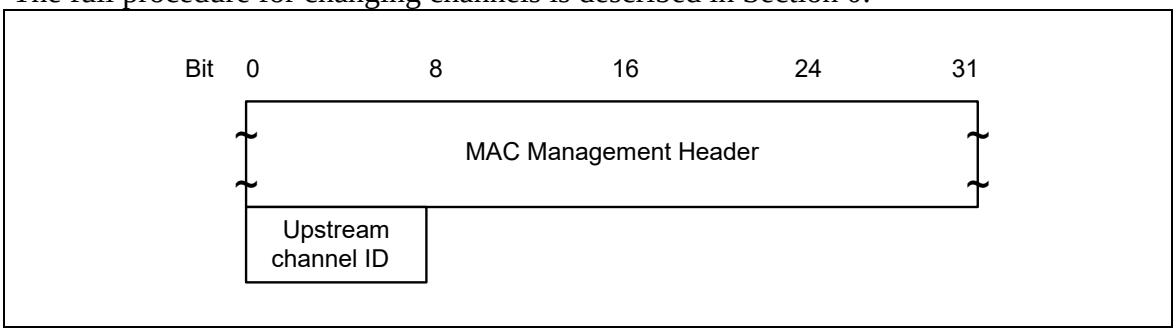

Figure 0-30. Upstream Channel Change Response

Parameters MUST be as follows:

Upstream channel ID The identifier of the upstream channel to which the CM is to switch for upstream transmissions. This is the same Channel ID specified in the UCC-REQ message. This is an 8-bit field.

6.4 Upstream Bandwidth Allocation

The upstream channel is modeled as a stream of mini-slots. The CMTS MUST generate the time reference for identifying these slots. It MUST also control access to these slots by the cable modems. For example, it MAY grant some number of contiguous slots to a CM for it to transmit a data PDU. The CM MUST time its transmission so that the CMTS receives it in the time reference specified. This section describes the elements of protocol used in requesting, granting, and using upstream bandwidth. The basic mechanism for assigning bandwidth management is the allocation map. Please refer to Figure 0-31.
The allocation map is a MAC Management message transmitted by the CMTS on the downstream channel which describes, for some interval, the uses to which the upstream mini-slots MUST be put. A given map MAY describe some slots as grants for particular stations to transmit data in, other slots as available for contention transmission, and other slots as an opportunity for new stations to join the link.
Many different scheduling algorithms MAY be implemented in the CMTS by different vendors; this specification does not mandate a particular algorithm. Instead, it describes the protocol elements by which bandwidth is requested and granted.

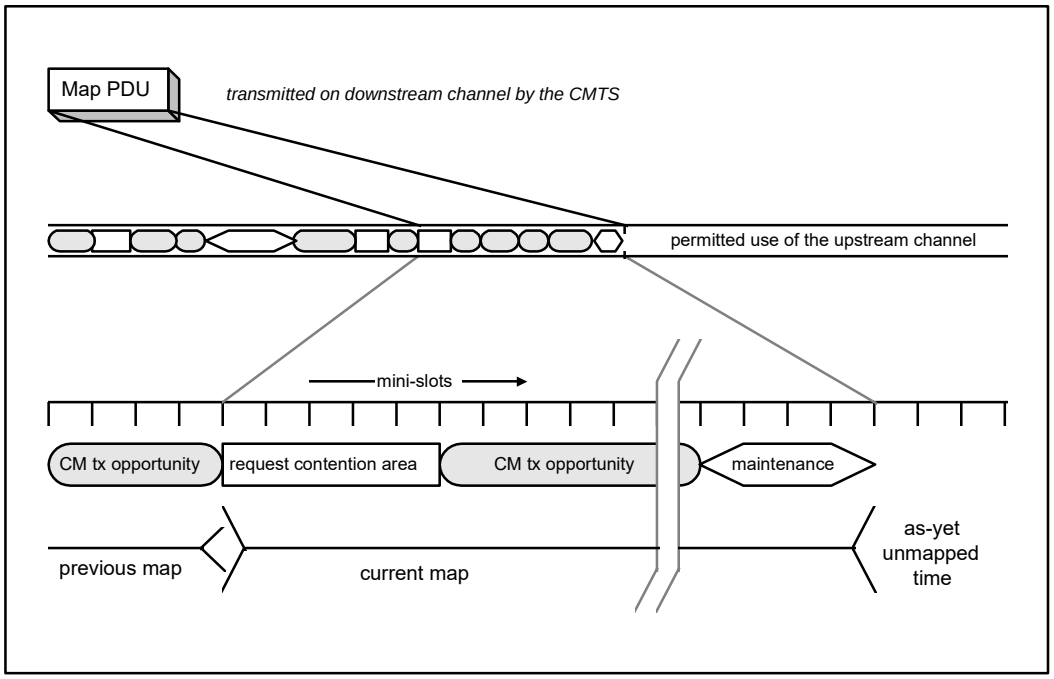

Figure 0-31. Allocation Map

The bandwidth allocation MUST include the following basic elements:

- Each CM has one or more short (14-bit) service identifiers as well as a 48-bit address.
- Upstream bandwidth is divided into a stream of mini-slots. Each mini-slot is numbered relative to a master reference maintained by the CMTS. The clocking information is distributed to the CMs by means of SYNC packets.
- CMs MAY issue requests to the CMTS for upstream bandwidth.

The CMTS MUST transmit allocation map PDUs on the downstream channel defining the allowed usage of each mini-slot. The map is described below.

6.4.1 The Allocation Map MAC Management Message

The allocation map is a varying-length MAC Management message that is transmitted by the CMTS to define transmission opportunities on the upstream channel. It includes a fixed-length header followed by a variable number of information elements (IEs) in the format shown in Section 0. Each information element defines the allowed usage for a range of mini-slots.

The fixed header includes the following (see also Figure 0-18):

- An 8-bit upstream channel identifier. This allows multiple upstream channels to be associated with a single downstream channel (Multiple upstream/downstream channel issues MAY be addressed by vendors in a variety of ways, and are beyond the scope of this specification.).
- (8 bits) the number of Information Elements which follow
- (16 bits) reserved for future use

- The effective start time of the first entry in this map. This is expressed as a 32-bit mini-slot counter. The time reference is distributed separately by the SYNC PDUs. Note that the Map PDU MUST be transmitted in advance of its effective start time in order to allow CMs to receive and process it (see Section 0).
- The latest time for which responses to upstream requests are included in this MAP.

6.4.1.1 Information Elements

Each IE consists of a 14-bit Service ID, a 4-bit type code, and a 14-bit starting offset as defined in 0. Since all stations MUST scan all IEs, it is critical that IEs be short and relatively fixed format. IEs within the map are strictly ordered by starting offset. For most purposes, the duration described by the IE is inferred by the difference between the IE's starting offset and that of the following IE. For this reason, a null IE MUST terminate the list. Refer to Table 0-15.

Four types of Service IDs are defined:

1. 0x3FFF - broadcast, intended for all stations
2. 0x2000-0x3FFE - multicast, purpose is defined administratively. See Appendix A.
3. 0x0001-0x1FFF - unicast, intended for a particular CM or a particular service within that CM
4. 0x0000 - null address, addressed to no station.

The types of information elements which MUST be supported are defined below.

6.4.1.1.1 The Request IE

The Request IE provides an upstream interval in which requests MAY be made for bandwidth for upstream data transmission. The character of this IE changes depending on the class of Service ID. If broadcast, this is an invitation for CMs to contend for requests. CMs MUST choose a random mini-slot within this interval in which to transmit their requests, to reduce the possibility of collisions. If unicast, this is an invitation for a particular CM to request bandwidth. Unicasts MAY be used as part of a class-of-service implementation (see below).

6.4.1.1.2 The Request/Data IE

The Request/Data IE provides an upstream interval in which requests for bandwidth or short data packets MAY be transmitted. This IE is distinguished from the Request IE in that:

- It provides a means by which allocation algorithms MAY provide for "immediate" data contention under light loads, and a means by which this opportunity can be withdrawn as network loading increases.
- Multicast Service IDs can be used to specify maximum data length, as well as allowed random starting points within the interval. For example, a particular multicast ID MAY specify a maximum of 64-byte data packets, with random starting points of every fourth slot.

A small number of well-known multicast Service IDs are defined in Appendix A. Others are available for vendor-specific algorithms.

Since data packets transmitted within this interval may collide, the CMTS MUST acknowledge any that are successfully received. The data packet MUST indicate in the MAC Header that a data acknowledgment is desired (see Table 0-12).

6.4.1.1.3 The Initial Maintenance IE

The Initial Maintenance IE provides an interval in which new stations may join the network. A long interval, equivalent to the maximum round-trip propagation delay plus the transmission time of the Ranging Request (RNG-REQ) message (see Section 0), MUST be provided to allow new stations to perform initial ranging.

6.4.1.1.4 The Station Maintenance IE

The Station Maintenance IE provides an interval in which stations are expected to perform some aspect of routine network maintenance, such as ranging or power adjustment. The CMTS MAY request that a particular CM perform some task related to network maintenance, such as periodic transmit power adjustment. In this case, the Station Maintenance IE is unicast to provide upstream bandwidth in which to perform this task.

6.4.1.1.5 Short and Long Data Grant IEs

The Data Grant IE provides an opportunity for a CM to transmit one or more upstream PDUs. These IEs MAY also be used, with a null slot range, to indicate that a request has been received and is pending. This IE is issued either in response to a request from a station, or because of an administrative policy providing some amount of bandwidth to a particular station (see class-of-service discussion below).

Short Data Grants are used with intervals less than or equal to the maximum burst size for this usage specified in the Upstream Channel Descriptor. If Short Data bursts are defined in the UCD, then all Long Data Grants MUST be for a larger number of mini-slots than the maximum for Short Data. The distinction between Long and Short Data Grants may be exploited in physical-layer forward-error-correction coding; otherwise, it is not meaningful to the bandwidth allocation process.

If this IE is a null-interval acknowledgment, it MUST follow all non-null-interval IEs. This allows cable modems to process all actual interval allocations first, before scanning the Map for request acknowledgments and data acknowledgments.

6.4.1.1.6 Data Acknowledge IE

The Data Acknowledge IE acknowledges that a data PDU was received. The CM MUST have requested this acknowledgment within the data PDU (normally this would be done for PDUs transmitted within a contention interval in order to detect collisions).

This IE MUST follow all non-null-interval IEs. This allows cable modems to process all actual interval allocations first, before scanning the Map for request acknowledgments and data acknowledgments.

6.4.1.1.7 Expansion IE

The Expansion IE provides for extensibility, if more than 16 code points or 32 bits are needed for future IEs.

6.4.1.1.8 Null IE

A Null IE terminates all actual allocations in the IE list. It is used to infer a length for the last interval. All data acknowledgments and all null data grants follow the Null IE.

6.4.1.2 Requests

Only one type of upstream request is inherent to the allocation protocol: a request for upstream bandwidth. This request MAY be transmitted any time that either a request or a

data PDU is allowed from the particular station. It MAY be transmitted during an interval described by any of:

- A Request IE
- A Request/Data IE
- A Data Grant IE.

In addition, it MAY be piggybacked[8] on a data transmission. The request includes:

- The Service ID making the request
- The number of mini-slots or ATM cells requested

The number of mini-slots requested MUST be the total number that are desired by the CM at the time of the request, subject to administrative limits[9]. The CM MUST request a number of mini-slots corresponding to one or more complete packets. A non-concatenating CM MUST request only the necessary mini-slots for one MAC frame per request. If, for whatever reason, a previous request has not been satisfied when the CM is making a new request, it MUST include the number of slots from the old request in the new total. Note that only one request at a time (per Service ID) will be outstanding. Because the CMTS MUST continue to issue null grants for as long as a request is unsatisfied, the CM is able to unambiguously determine when its request is still pending. Administrative limits MAY be assigned, either globally or per Service ID, on the number of mini-slots that MAY be requested at once. The global limit is configured as the maximum transmission burst size.

6.4.2 Map Transmission and Timing

The allocation map MUST be transmitted in time to propagate across the physical cable and be received and handled by the receiving CMs. As such, it MAY be transmitted considerably earlier than its effective time. The components of the delay are:

- Worst-case round-trip propagation delay -- may be network-specific, but on the order of hundreds of microseconds.
- Queuing delays within the CMTS -- implementation-specific.
- Processing delays within the CMs -- MUST allow a minimum processing time by each CM as specified in Appendix B (CM MAP Processing Time).
- PMD-layer FEC interleaving.

Within these constraints, vendors MAY wish to minimize this delay so as to minimize latency of access to the upstream channel.

The number of mini-slots described MAY vary from map to map. At minimum, a map MAY describe a single mini-slot. This would be wasteful in both downstream bandwidth and in processing time within the CMs. At maximum, a map MAY stretch to tens of milliseconds. Such a map would provide poor upstream latency. Allocation algorithms MAY

[8] When piggybacked, these values are carried in the Extended Header (section 0, EH_TYPE = 1).

[9] The CM is limited by the Maximum Transmit Burst for the service class, as defined in Appendix C.

vary the size of the maps over time to provide a balance of network utilization and latency under varying traffic loads.

At minimum, a map MUST contain two Information Elements: one to describe an interval and a null IE to terminate the list. At a maximum, a map MUST be bounded by a limit of 240 information elements. Maps are also bounded in that they MUST NOT describe more than 4096 mini-slots into the future. The latter limit is intended to bound the number of future mini-slots that each CM is required to track. Even though several maps may be outstanding, the sum of the number of mini-slots they describe MUST NOT exceed 4096.

The set of all maps, taken together, MUST describe every mini-slot in the upstream channel. If a CM fails to receive a map describing a particular interval, it MUST NOT transmit during that interval.

Multiple maps MAY be outstanding at once.

6.4.3 Protocol Example

This section illustrates the interchange between the CM and the CMTS when the CM has data to transmit (Figure 0-32). Suppose a given CM has a data PDU available for transmission.

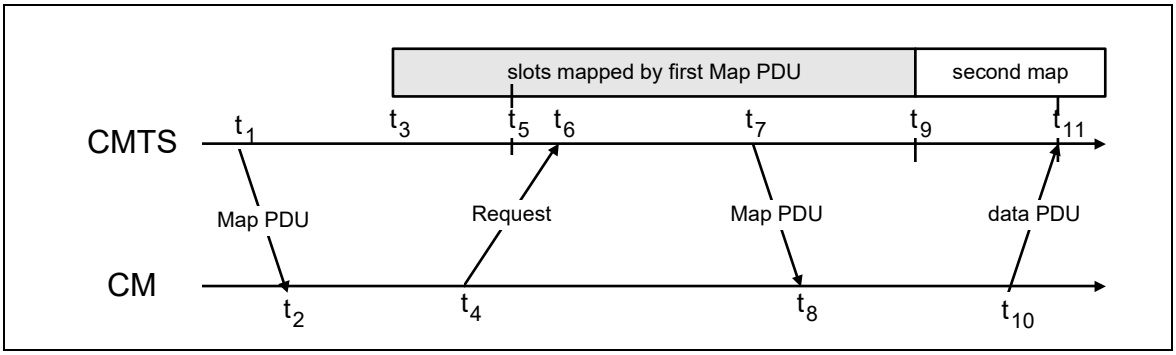

Figure 0-32. Protocol Example

Description

1. At time t_1, the CMTS transmits a map whose effective starting time is t_3. Within this map is a Request IE which will start at t_5. The difference between t_1 and t_3 is needed to allow for:
   - downstream propagation delay (including FEC interleaving) to allow all CMs to receive the Map
   - processing time at the CM (allows the CMs to parse the Map and translate it into transmission opportunities)
   - upstream propagation delay (to allow the CM's transmission of the first upstream data to begin in time to arrive at the CMTS at time t_3).
2. At t_2, the CM receives this map and scans it for request opportunities. In order to minimize request collisions, it calculates t_6 as a random offset from t_5 within the interval described by the Request IE (see Section 0, also the multicast SID definitions in Appendix A.2).
3. At t_4, the CM transmits a request for as many mini-slots as needed to accommodate the PDU. Time t_4 is chosen based on the ranging offset (see Section 0) so that the request will arrive at the CMTS at t_6.

4. At t_6, the CMTS receives the request and schedules it for service in the next map. (The choice of which requests to grant will vary with the class of service requested, any competing requests, and the algorithm used by the CMTS.)
5. At t_7, the CMTS transmits a map whose effective starting time is t_9. Within this map, a data grant for the CM will start at t_{11}.
6. At t_8, the CM receives the map and scans for its data grant.
7. At t_{10}, the CM transmits its data PDU so that it will arrive at the CMTS at t_{11}. Time t_{10} is calculated from the ranging offset as in step 3.

Steps 1 and 2 need not contribute to access latency if CMs routinely maintain a list of request opportunities.

At Step 3, the request may collide with requests from other CMs and be lost. The CMTS does not directly detect the collision. The CM determines that a collision (or other reception failure) occurred when the next map fails to include acknowledgment of the request. The CM MUST then perform a back-off algorithm and retry.

At Step 4, the CMTS scheduler MAY fail to accommodate the request within the next map. If so, it MUST reply with a zero-length grant in that map. It MUST continue to report this zero-length grant in all succeeding maps until the request can be granted. This MUST signal to the CM that the request is still pending. So long as the CM is receiving a zero-length grant, it MUST NOT issue new requests for that service queue.

6.4.4 Contention Resolution

The CMTS controls assignments on the upstream channel through the MAP and determines which mini-slots are subject to collisions. The CMTS MAY allow collisions on either Requests or Data PDUs.

The mandatory method of contention resolution which MUST be supported is based on a truncated binary exponential back-off, with the initial back-off window and the maximum back-off window controlled by the CMTS. The values are specified as part of the Bandwidth Allocation Map (MAP) MAC message and represent a power-of-two value. For example, a value of 4 indicates a window between 0 and 15; a value of 10 indicates a window between 0 and 1023.

When a CM has information to send and wants to enter the contention resolution process, it sets its internal back-off window equal to the initial back-off window defined in the MAP currently in effect.

The CM MUST randomly select a number within its back-off window. This random value indicates the number of contention transmit opportunities which the CM MUST defer before transmitting. A CM MUST only consider contention transmit opportunities for which this transmission would have been eligible. These are defined by either Request IEs or Request/Data IEs in the MAP. Note: Each IE can represent multiple transmission opportunities.

As an example, consider a CM whose initial back-off window is 0 to 15 and it randomly selects the number 11. The CM must defer a total of 11 contention transmission opportunities. If the first available Request IE is for 6 requests, the CM does not use this and has 5 more opportunities to defer. If the next Request IE is for 2 requests, the CM has 3 more to defer. If the third Request IE is for 8 requests, the CM transmits on the fourth request, after deferring for 3 more opportunities.

After a contention transmission, the CM waits for a Data Grant (Data Grant Pending) or Acknowledgment in a subsequent MAP. Once either is received, the contention resolution is complete. The CM determines that the contention transmission was lost when it finds a MAP without a Data Grant (Data Grant Pending) or Acknowledgment for it and with an Ack time more recent than the time of transmission. The CM MUST now increase its back-off window by a factor of two, as long as it is less than the maximum back-off window. The CM MUST randomly select a number within its new back-off window and repeat the deferring process described above.

This re-try process continues until the maximum number of retries (16) has been reached, at which time the PDU MUST be discarded. Note: The maximum number of retries is independent of the initial and maximum back-off windows that are defined by the CMTS.

If the CM receives a unicast Request or Data Grant at any time while deferring for this SID, it MUST stop the contention resolution process and use the explicit transmit opportunity.

The CMTS has much flexibility in controlling the contention resolution. At one extreme, the CMTS MAY choose to set up the initial and maximum back-off windows to emulate an Ethernet-style back-off with its associated simplicity and distributed nature, but also its fairness and efficiency issues. This would be done by setting initial = 0 and max = 10 in the Upstream Channel Descriptor. At the other end, the CMTS MAY make the initial and maximum back-off windows identical and frequently update these values in the MAP so all cable modems are using the same, and hopefully optimal, back-off window.

6.4.5 CM Behavior

The following rules govern the response a CM may make when processing maps:

1. A CM MUST first use any Grants assigned to it. Next, the CM MUST use any unicast REQ for it. Finally, the CM MUST use then next available broadcast/multicast REQ or REQ/Data IEs for which it is eligible..
2. Only one Request may be outstanding at a time for a particular Service ID.
3. If a CM has a Request pending, it MUST NOT use intervening contention intervals for that Service ID.

6.4.6 Support for Multiple Channels

Vendors MAY choose to offer various combinations of upstream and downstream channels within one MAC service access point. The upstream bandwidth allocation protocol allows for multiple upstream channels to be managed via one or many downstream channels.

If multiple upstream channels are associated with a single downstream channel, then the CMTS MUST send one allocation map per upstream channel. The map’s channel identifier, taken with the Upstream Channel Descriptor Message (see Section 0), MUST specify to which channel each map applies. There is no requirement that the maps be synchronized across channels. Appendix G provides an example.

If multiple downstream channels are associated with a single upstream channel, the CMTS MUST ensure that the allocation map reaches all CMs. That is, if some CMs are attached to a particular downstream channel, then the map MUST be transmitted on that

channel. This MAY necessitate that multiple copies of the same map be transmitted. The slot reference in the map header MUST always relate to the SYNC reference on the downstream channel on which it is transmitted.

If multiple downstream channels are associated with multiple upstream channels, the CMTS MAY need to transmit multiple copies of multiple maps to ensure both that all upstream channels are mapped and that all CMs have received their needed maps.

6.4.7 Classes of Service

This specification does not provide explicit classes of service, but provides the means for vendors to provide a variety of types of service.

This section illustrates how the available mechanisms can be used to provide support for the service classes defined in [RFC-1633] “Integrated Services in the Internet Architecture: An Overview”.

[RFC-1633] divides applications into elastic applications which will always wait for data to arrive and inelastic applications in which the data must arrive within a certain time to be useful.

Within the inelastic category further sub divisions can be defined:

- delay-intolerant -- the data must arrive within a perfectly reliable upper bound on delay
- delay-tolerant -- the data must arrive within a fairly reliable but not perfectly reliable delay bound.

Within the elastic category the following application types can be distinguished:

- interactive burst
- interactive bulk

The service model should be able to support both types of inelastic application and to allow for lower delays for interactive elastic applications than for bulk elastic applications.

Inelastic Delay-Intolerant -- The CMTS provides a Data Grant of fixed size to a configured Service ID once every N mini-slots. This Service ID MAY be assigned to all traffic for a CM, or it MAY only be used for this particular service within the CM.

Inelastic Delay-Tolerant -- The CMTS periodically provides a unicast Request IE to a configured Service ID. It then grants the request based on the negotiated delay variation, bandwidth, and other considerations. The CM has guaranteed access in which to make requests, and the CMTS’s scheduling algorithm provides the negotiated service. As an alternative, the minimum data rate of the service negotiation MAY be provided in the same way that inelastic delay-intolerant traffic is handled.

Elastic Application Support-- is provided by a contention/FIFO service strategy, in which CMs contend for request slots, and the CMTS services requests as they arrive. Service priorities can allow differential delays between interactive and bulk applications.

6.4.7.1 Resource-Sharing

In order to support multiple end systems sharing the same upstream and downstream links, it is necessary to provide resource-sharing mechanisms for the link bandwidth. The following are some examples of this:

Link-usage feedback is provided implicitly by contention and by the CMTS's scheduling algorithm, so no explicit congestion notifications are needed.
Guaranteed Minimum Bit Rate can be provided in much the same manner as inelastic delay-tolerant application support.
Guaranteed Maximum Bit Rate MAY be provided by a number of implementation mechanisms, including the CMTS's allocation algorithm and throttling within the CM.
Service Priorities MUST be implemented by applying different service criteria to different Service IDs. It is anticipated that a particular CM MAY have several Service IDs, each corresponding to a particular service class. The particular services offered MAY vary from vendor to vendor.
Contention that is limited to a service class MAY be accomplished with multicast Request IEs and Request/Data IEs. Creation of such multicast groups is vendor-specific.

6.5 Timing and Synchronization

One of the major challenges in designing a MAC protocol for a cable network is compensating for the large delays involved. These delays are an order of magnitude larger than the transmission burst time in the upstream. To compensate for these delays, the cable modem MUST be able to time its transmissions precisely to arrive at the CMTS at the start of the assigned mini-slot.
To accomplish this, two pieces of information are needed by each cable modem:

- a global timing reference sent downstream from the CMTS to all cable modems.
- a timing offset, calculated during a ranging process, for each cable modem.

6.5.1 Global Timing Reference

The CMTS MUST create a global timing reference by transmitting the Time Synchronization (SYNC) MAC management message downstream at precise times. The message contains a timestamp that exactly identifies when the CMTS transmitted the message. Cable modems MUST then compare the actual time the message was received with the timestamp and adjust their local clock references accordingly.
The SYNC message MUST be transmitted on a periodic basis called the MAC SYNC Interval (MSI). The CMTS MUST transmit one SYNC message within each MSI. The CMTS determines when to send the SYNC message based on the requirements of this and other downstream traffic. The maximum separation between any SYNC messages is therefore 2 MSI periods.
The Transmission Convergence sublayer must operate closely with the MAC sublayer to provide an accurate timestamp for the SYNC message. As mentioned in the Ranging section below (Section 0), the model assumes that the timing delays through the remainder of the PHY layer MUST be relatively constant. Any variation in the PHY delays MUST be accounted for in the guard time of the PHY overhead.
It is intended that the MAC Sync Interval be on the order of tens of milliseconds. This imposes very little downstream overhead while letting cable modems acquire their global timing synchronization quickly.

6.5.2 CM Channel Acquisition

Any cable modem MUST NOT use the upstream channel until it has successfully synchronized to the downstream.

First, the cable modem MUST establish PMD sublayer synchronization. This implies that it has locked onto the correct frequency, equalized the downstream channel, recovered any PMD sublayer framing and the FEC is operational (refer to Section 0). At this point, a valid bit stream is being sent to the transmission convergence sublayer. The transmission convergence sublayer performs its own synchronization (see Section 0). On detecting the well-known MCNS PID, along with a payload unit start indicator per [ITU-T H.222.0], it delivers the MAC frame to the MAC sublayer.

The MAC sublayer MUST now search for the Timing Synchronization (SYNC) MAC management messages. The cable modem achieves MAC synchronization once it has received at least two SYNC messages within the maximum SYNC interval (see Appendix B) and has verified that its clock tolerances are within specified limits.

A cable modem remains in “SYNC” as long as it continues to successfully receive the SYNC messages. If the Lost SYNC Interval (see Appendix B) has elapsed without a valid SYNC message, a cable modem MUST NOT use the upstream and MUST try to re-establish synchronization again.

6.5.3 Ranging

Ranging is the process of acquiring the correct timing offset such that the cable modem’s transmissions are aligned to the correct mini-slot boundary. The timing delays through the PHY layer MUST be relatively constant. Any variation in the PHY delays MUST be accounted for in the guard time of the upstream PMD overhead.

First, a cable modem MUST synchronize to the downstream and learn the upstream channel characteristics through the Upstream Channel Descriptor MAC management message. At this point, the cable modem MUST scan the Bandwidth Allocation MAP message to find a Station Maintenance region assigned to initializing CMs. Refer to Section 0. The CMTS MUST make a Station Maintenance region large enough to account for the variation in delays between any two CMs.

The cable modem MUST put together a Ranging Request message to be sent in the Station Maintenance region. The SID field MUST be set to the non-initialized CM value (zero).

Ranging adjusts each CM’s timing offset such that it appears to be located right next to the CMTS. The CM MUST set its initial timing offset to the amount of internal fixed delay equivalent to putting this CM next to the CMTS. This amount includes delays introduced through a particular implementation, and MUST include the downstream PHY interleaving latency.

When the Station Maintenance transmit opportunity occurs, the cable modem MUST send the Ranging Request message. Thus, the cable modem sends the message as if it was physically right at the CMTS.

Once the CMTS has successfully received the Ranging Request message, it MUST return a Ranging Response message addressed to the individual cable modem. Within the Ranging Response message MUST be a temporary SID assigned to this cable modem until it has completed the registration process. The message MUST also contain information on

RF power level adjustment and offset frequency adjustment as well as any timing offset corrections.

The cable modem MUST now wait for an individual Station Maintenance region assigned to its temporary SID. It MUST now transmit a Ranging Request message at this time using the temporary SID along with any power level and timing offset corrections. The CMTS MUST return another Ranging Response message to the cable modem with any additional fine tuning required. The ranging request/response steps MUST be repeated until the response contains a Ranging Successful notification. At this point, the cable modem MUST join normal data traffic in the upstream. See Section 0 for complete details on the entire initialization sequence. In particular, state machines and the applicability of retry counts and timer values for the ranging process are defined in Section 0.

Note: The burst type to use for any transmission is defined by the Interval Usage Code (IUC). Each IUC is mapped to a burst type in the UCD message.

6.5.4 Timing Units and Relationships

The SYNC message conveys a time reference that is measured in 6.25-microsecond ticks. These units were chosen as the greatest-common-divisor of the upstream mini-slot time across various modulations and symbol rates. As this is decoupled from particular upstream channel characteristics, a single SYNC time reference may be used for all upstream channels associated with the downstream channel.

The bandwidth allocation MAP uses time units of “mini-slots.” A mini-slot represents the byte-time needed for transmission of a fixed number of bytes. The mini-slot is expected to represent 16 byte-times, although other values could be chosen. The size of the mini-slot, expressed as a multiple of the SYNC time reference, is carried in the Upstream Channel Descriptor. The example in Table 0-18 relates mini-slots to the SYNC time ticks:

Table 0-18. Example Relating Mini-Slots to Time Ticks

Parameter	Example Value
Time tick	6.25 microseconds
Bytes per mini-slot	16 (nominal, when using QPSK modulation)
Symbols/byte	4 (assuming QPSK
Symbols/second	2,560,000
Mini-slots/second	40,000
Microseconds/mini-slot	25
Ticks/mini-slot	4

The reader is encouraged to try other symbol rates and modulations. Note that the symbols/byte is a characteristic of an individual burst transmission, not of the channel. A mini-slot in this instance could represent either 16 or 32 bytes, depending on the modulation choice.

A “mini-slot” is the unit of granularity for upstream transmission opportunities. There is no implication that any PDU can actually be transmitted in a single mini-slot.

The MAP counts mini-slots in a 32-bit counter that counts to (2^{32} - 1) and then wraps back to zero. The least-significant bits of the mini-slot counter MUST match the most-

significant bits of the SYNC counter. That is, mini-slot N begins at time reference (N * T), where T is the UCD multiplier (T is always a power of 2).
Note that the constraint that the UCD multiplier be a power of two has the consequence that the number of bytes per mini-slot must also be a power of two.

6.6 Data Link Encryption Support

The procedures to support data link encryption are defined in [MCNS2 and MCNS8]. The interaction between the MAC layer and the security system is limited to the items defined below.

6.6.1 MAC Messages

MAC management messages (Section 0) MUST NOT be encrypted.

6.6.2 Framing

Security information is carried as payload data to the MAC and is essentially transparent. A frame carrying an encrypted payload MUST be constructed as shown in Figure 0-33.

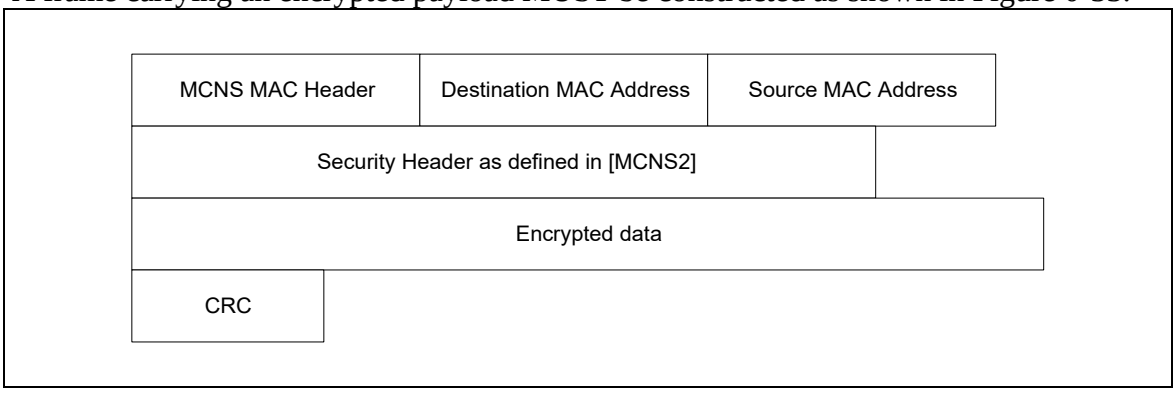

Figure 0-33. Security Framing

The following rules MUST be followed when the encrypted frame is constructed:

- The DLE flag in the FC field of the MAC Header MUST be set.
- The security header MUST follow the MAC source address, and MUST precede the type/length field.
- The security header will be a multiple of 4 bytes to optimize alignment.
- The message payload must be encrypted and decrypted using the mechanism defined in the following steps.

This example is defined for a frame received by a CM at the CMCI and transferred over the cable network to the CMTS and forwarded via an Ethernet based NSI. For frames traveling in the NSI-to-CMCI direction, the roles of CM and CMTS are reversed.

6.6.2.1 CMCI to RF

Please refer to Figure 0-34.

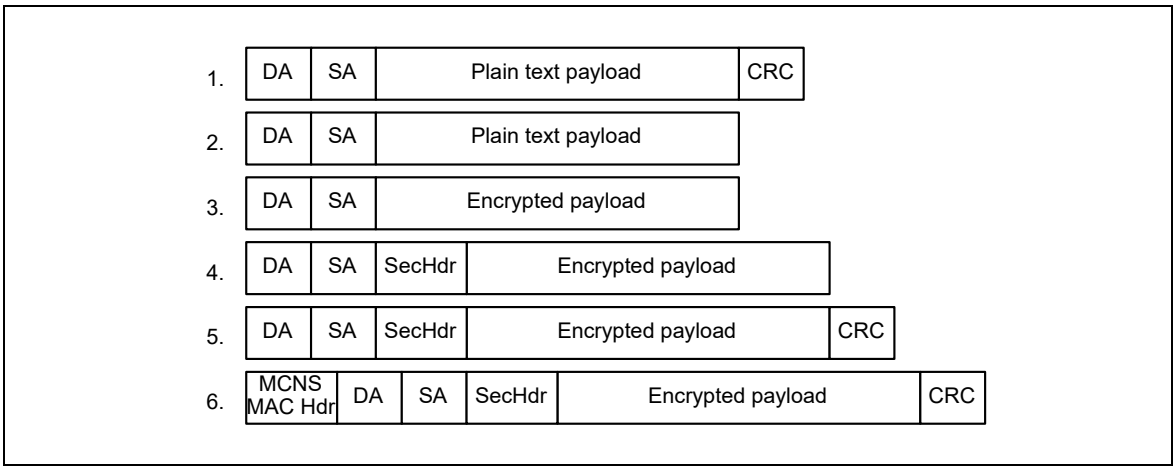

Figure 0-34. Example of Security Framing at the CM

1) CM receives frame from Ethernet
2) Check and discard Ethernet CRC
3) Encrypt payload
4) Add Security Header
5) Calculate new CRC over DA, SA, Security Header and encrypted payload
6) Add MCNS MAC Header and forward on to the RF transmitter

6.6.2.2 RF to CMTS-NSI

Please refer to Figure 0-35.

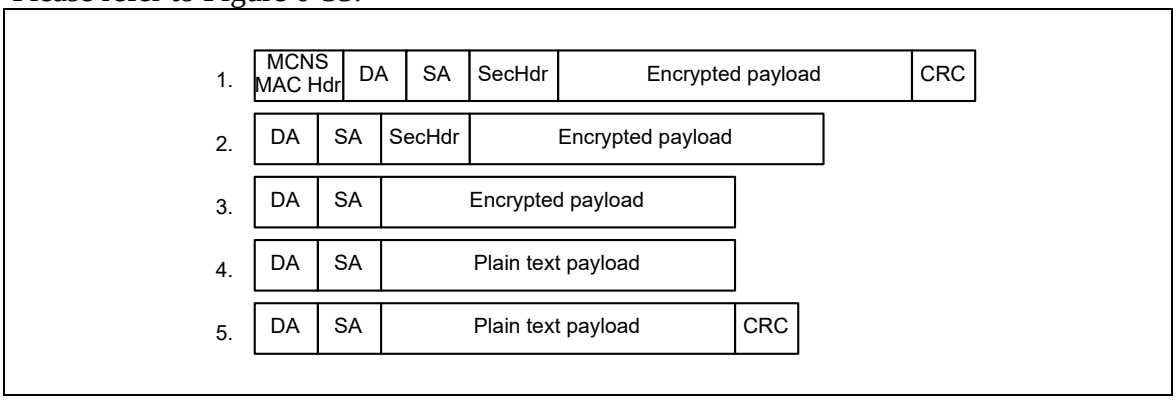

Figure 0-35. Example of Security Framing at the CMTS

1. Check and discard MAC Header
2. Check and discard CRC
3. Remove Security Header
4. Decrypt Payload
5. Recalculate CRC and forward frame to CMTS-NSI

This page intentionally left blank

7. Cable Modem - CMTS Interaction

This section covers key requirements for interaction between the cable modem and CMTS. The interaction can be broken down into five basic categories: modem initialization, authentication, configuration, authorization, and signaling.

7.1 CMTS Initialization

The mechanism utilized for CMTS initialization (local terminal, file download, SNMP, etc.) is described in [MCNS5]. It MUST meet the following criteria for system interoperability.

- The CMTS MUST be able to reboot and operate in a stand-alone mode using configuration data retained in non-volatile storage.
- If valid parameters are not available from non-volatile storage or via another mechanism such as the Spectrum Management System (see [SMS]), the CMTS MUST not generate any downstream messages (including SYNC). This will prevent CMs from transmitting.
- The CMTS MUST provide the information defined in Section 0 to CMs for each upstream channel.

7.2 Cable Modem Initialization

The procedure for initialization of a cable modem MUST be as shown in Figure 0-1. This figure shows the overall flow between the stages of initialization in a CM. This shows no error paths, and is simply to provide an overview of the process. The more detailed finite state machine representations of the individual sections (including error paths) are shown in the subsequent figures. Timeout values are defined in Appendix B.

The procedure can be divided into the following phases:

- Scan for downstream channel and establish synchronization with the CMTS.
- Obtain transmit parameters (from UCD message)
- Perform ranging
- Establish IP connectivity
- Establish time of day
- Establish security association
- Transfer operational parameters.

Each CM contains the following information when shipped from the manufacturer:

- A unique IEEE 802 48-bit MAC address which is assigned during the manufacturing process. This is used to identify the modem to the various provisioning servers during initialization.
- Security information as defined in [MCNS2 and MCNS8] (e.g., X.509 certificate) used to authenticate the CM to the security server and authenticate the responses from the security and provisioning servers.

The SDL (Specification and Description Language) notation used in the following figures is shown in Figure 7-2 (refer to ITU-T Recommendation Z.100 [ITU-T Z.100]).

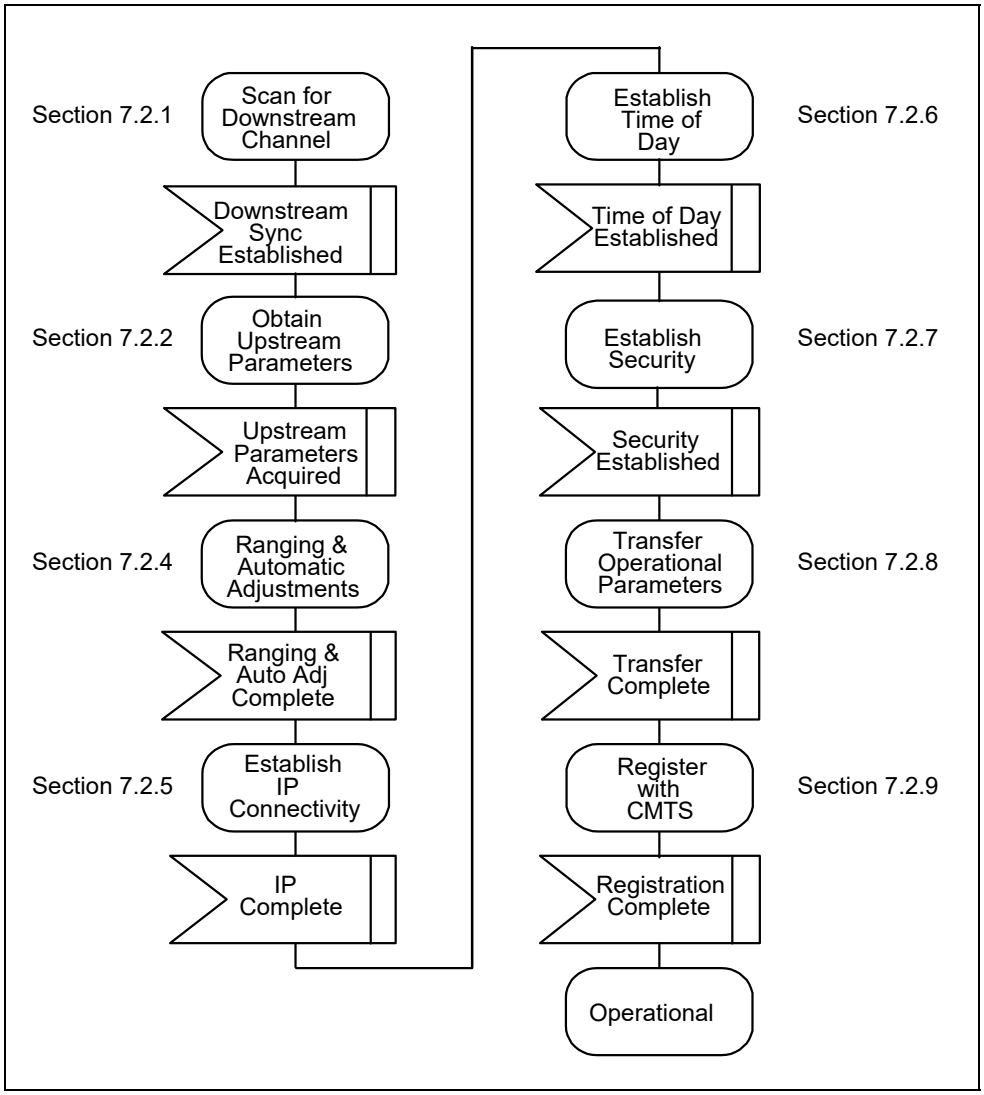

Figure 0-1. CM Initialization Overview

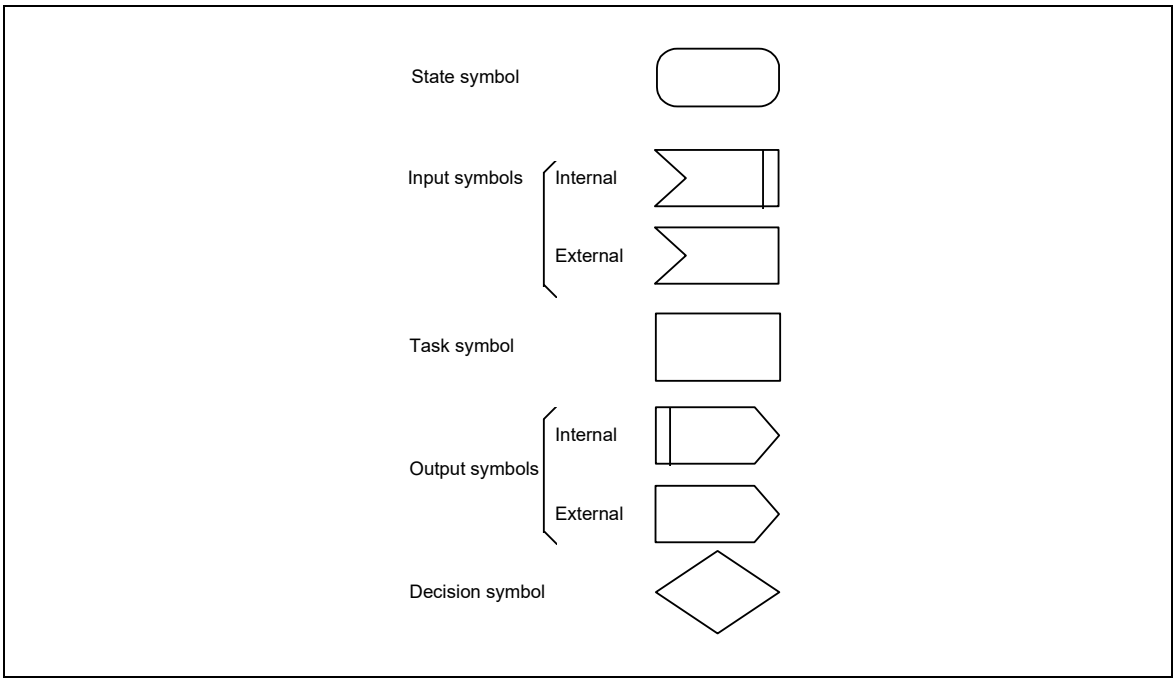

Figure 0-2. SDL Notation

7.2.1 Scanning and Synchronization to Downstream

On initialization or after signal loss, the cable modem MUST acquire a downstream channel. The CM MUST have non-volatile storage in which the last operational parameters are stored and MUST first try to re-acquire this downstream channel. If this fails, it MUST begin to continuously scan the 6-MHz channels of the downstream frequency band of operation until it finds a valid downstream signal.
A downstream signal is considered to be valid when the modem has achieved the following steps:

- synchronization of the QAM symbol timing
- synchronization of the FEC framing
- synchronization of the MPEG packetization
- recognition of SYNC downstream MAC messages

While scanning, it is desirable to give an indication to the user that the CM is doing so.

7.2.2 Obtain Upstream Parameters

Refer to Figure 0-3 After synchronization, the CM MUST wait for an upstream channel descriptor message (UCD) from the CMTS in order to retrieve transmission parameters from the data stream. These messages are transmitted periodically from the CMTS for all available upstream channels and are addressed to the MAC broadcast address. The CM MUST determine whether it can use the upstream channel from the channel description parameters. If the channel is not suitable, then the CM MUST wait for a channel description message for a channel which it can use. If no channel can be found after a suitable

timeout period, then the CM MUST continue scanning to find another downstream channel.

When the cable modem finds an upstream channel with acceptable transmission parameters, it MUST extract the parameters for this upstream from the UCD. It then MUST wait for the next SYNC message[10] and extract the upstream mini-slot timestamp from this message. The CM then MUST wait for a bandwidth allocation map for the selected channel. It MAY then begin transmitting upstream in accordance with the MAC operation and the bandwidth allocation mechanism.

It is desirable to give an indication to the user that the CM has finished searching and has detected a valid downstream signal and upstream channel.

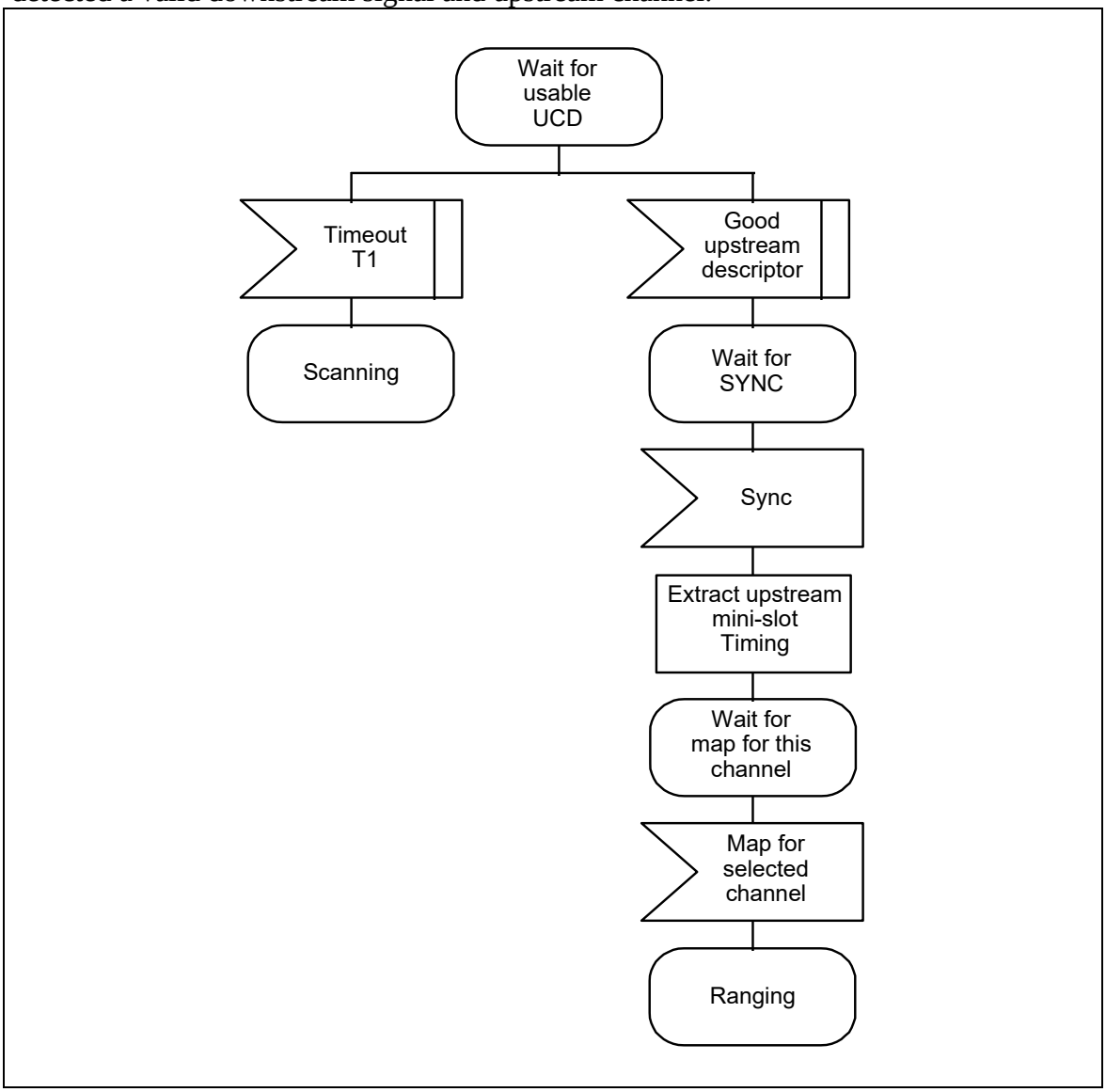

Figure 0-3. Obtaining Upstream Parameters

[10] Alternatively, since the SYNC message applies to all upstream channels, the CM may have already acquired a time reference from previous SYNC messages. If so, it need not wait for a new SYNC.

7.2.3 Message Flows During Scanning and Upstream Parameter Acquisition

The CMTS MUST generate SYNC and UCD messages on the downstream at periodic intervals within the ranges defined in Section 0. These messages are addressed to all CMs. Refer to Figure 0-4.

```
CMTS                                                    CM

clock time to send SYNC     ---------------SYNC-------------------->    |
clock time to send UCD      ---------------UCD---------------------->    |
                                                                        |
clock time to send SYNC     ---------------SYNC-------------------->    |
                                                                        | Example of a UCD cycle
                                                                        | prior to CM power-on
                                                                        |
clock time to send SYNC     ---------------SYNC-------------------->    |
                                                                        |
                                                                        |
                                                                        |
clock time to send SYNC     ---------------SYNC-------------------->    |
                                                                        |
                                                                        |
clock time to send SYNC     ---------------SYNC-------------------->
clock time to send UCD      ---------------UCD---------------------->


clock time to send SYNC     ---------------SYNC-------------------->
                                                                        power on sequence complete

clock time to send SYNC     ---------------SYNC-------------------->
                                                                        establish PHY synchronization
                                                                        & wait for UCD

clock time to send SYNC     ---------------SYNC-------------------->


clock time to send SYNC     ---------------SYNC-------------------->
clock time to send UCD      ---------------UCD---------------------->
                                                                        obtain parameters for this upstream chan-
                                                                        nel to use for initialization
clock time to send SYNC     ---------------SYNC-------------------->
                                                                        extract slot info for upstream & wait for
                                                                        transmit opportunity to perform ranging
clock time to send SYNC     ---------------SYNC-------------------->

clock time to send MAP      ---------------MAP---------------------->
                                                                        start ranging process
```

Figure 0-4. Message Flows During Scanning and Upstream Parameter Acquisition

7.2.4 Ranging and Automatic Adjustments

The ranging and adjustment process is fully defined in Section 0 and in the following sections. The message sequence chart and the finite state machines on the following

pages define the ranging and adjustment process which MUST be followed by compliant CMs and CMTSs. Refer to Figure 0-5 through Figure 7-8.

***Note**:* MAPs are transmitted as described in Section 0.

CMTS		**CM**
[time to send the ranging opportunity message]		
send map with station maintenance information element to broadcast service ID	----------MAP---------->	
	<---------RNG-REQ-------	transmit ranging packet in contention mode with service ID parameter = 0
[receive recognizable ranging packet]		
allocate temporary Service ID		
send ranging response	----------RNG-RSP------->	
add temporary service ID to poll list		store Service ID & adjust other parameters
[time to send the next map]		
send periodic ranging opportunity map element to modem using temporary SID	----------MAP---------->	recognize own Service ID in map
	<---------RNG-REQ-------	reply to poll
send ranging response	----------RNG-RSP------->	
		adjust local parameters
[time to send the next map]		
send periodic transmit opportunity to broadcast address	----------MAP---------->	

Figure 0-5. Ranging and Automatic Adjustments Procedure

***Note*:** The CMTS MUST allow the CM sufficient time to have processed the previous RNG-RSP (i.e., to modify the transmitter parameters) before sending the CM a specific ranging opportunity. This is defined as CM Ranging Response Time in Appendix B.

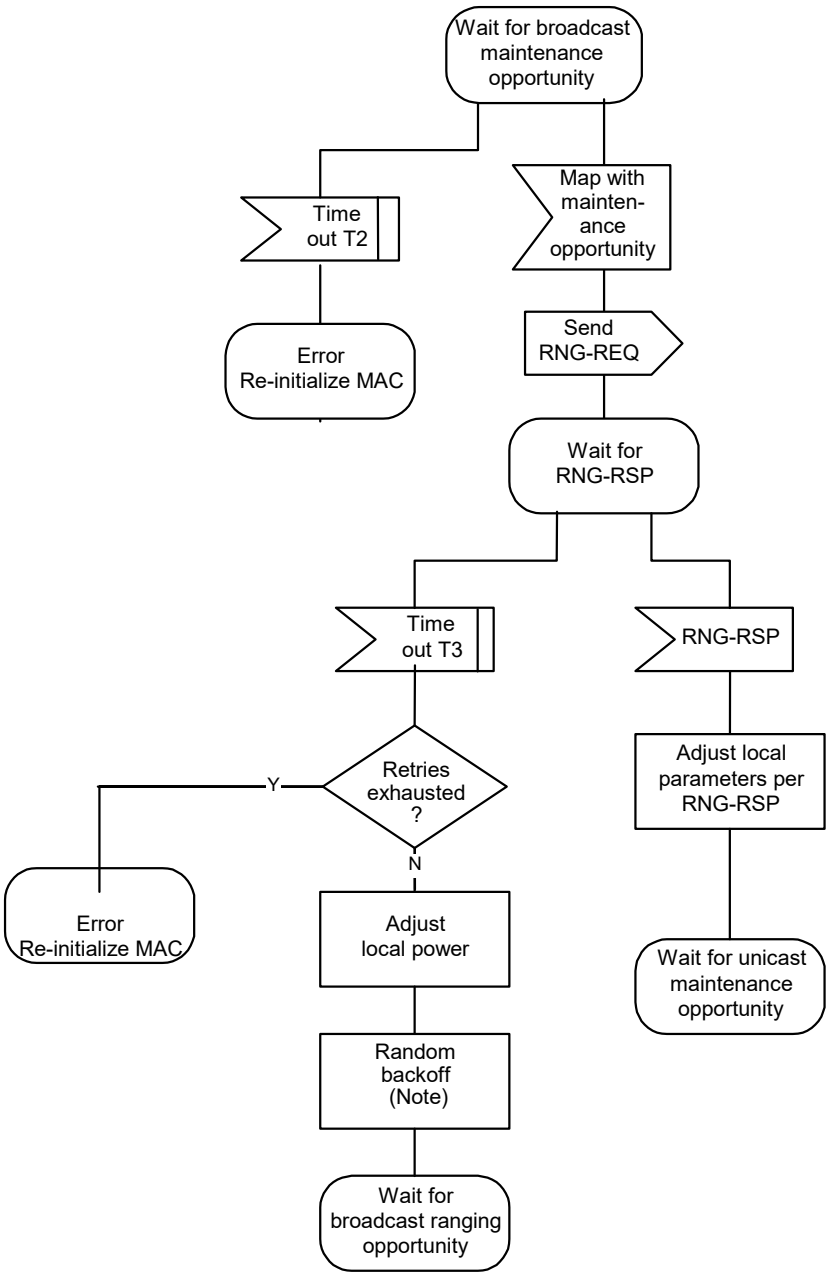

Note: Timeout T3 may occur because the RNG-REQs from multiple modems collided. To avoid these modems repeating the loop in lockstep, a random backoff is required. This is a backoff over the ranging window specified in the UCD.

Figure 0-6. Initial Ranging - CM

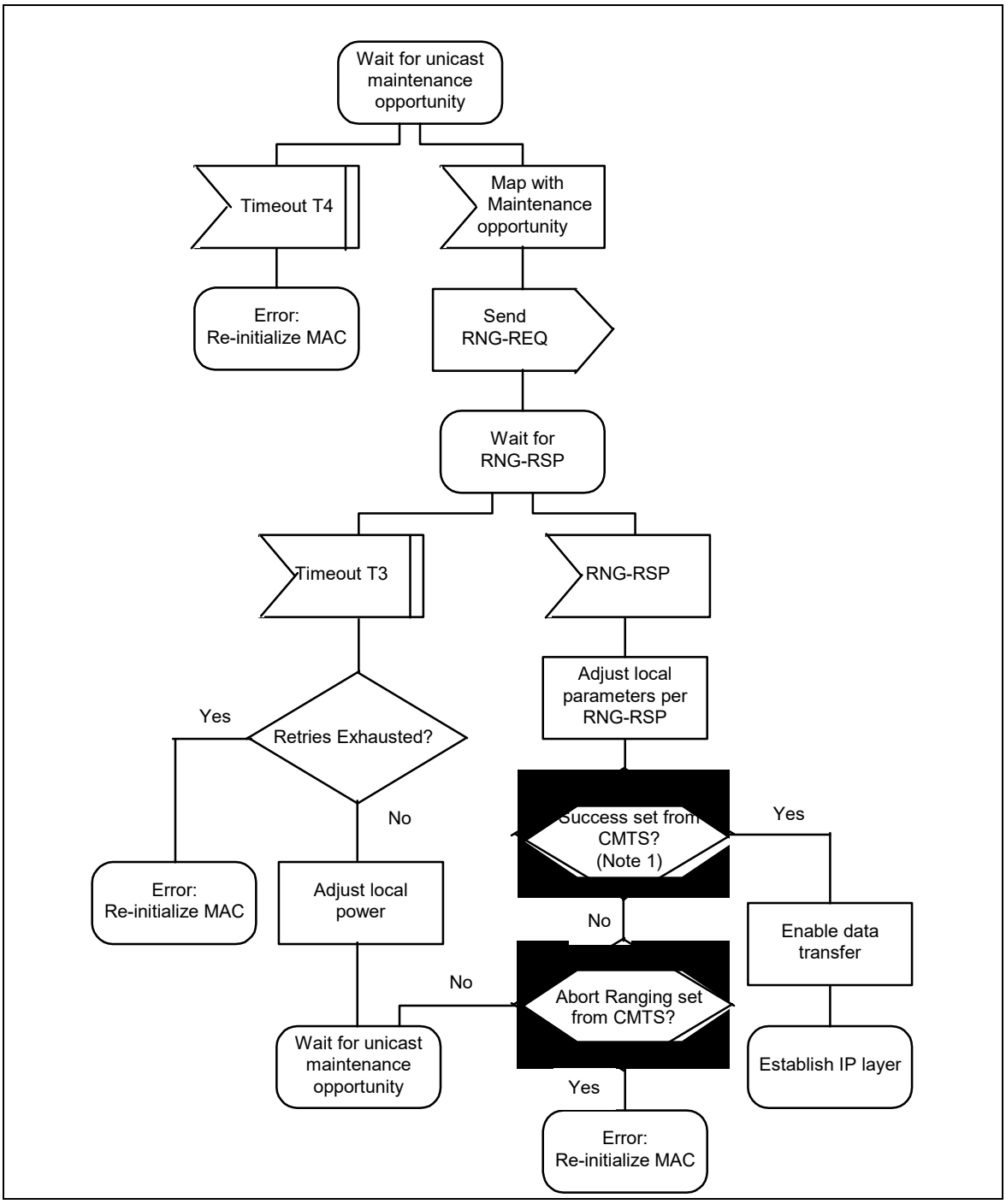

Note. Ranging Request is within the tolerance of the CMTS.

Figure 0-7. Initial Ranging - CM (continued)

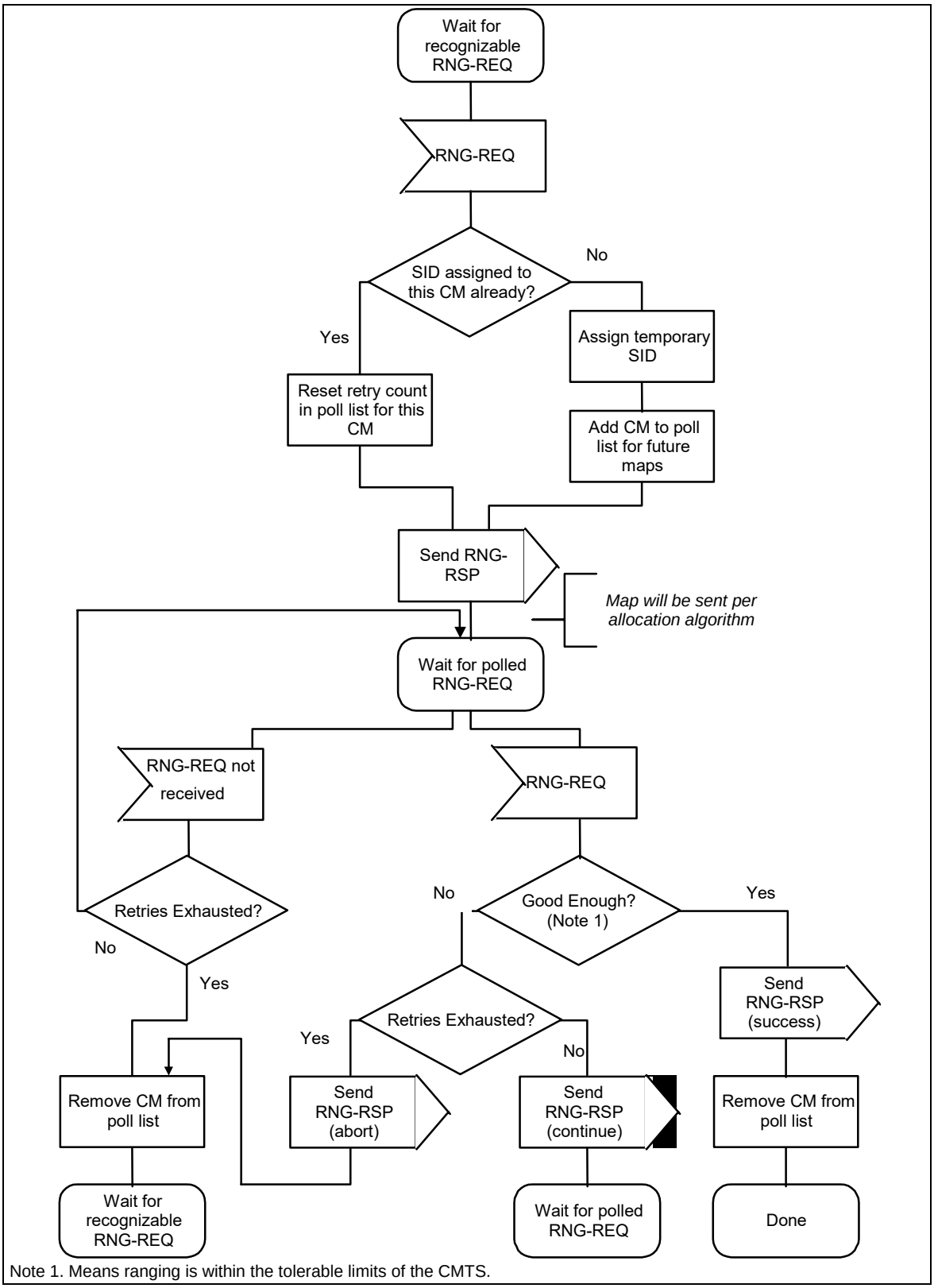

Figure 0-8. Initial Ranging - CMTS

Ranging Parameter Adjustment

Adjustment of local parameters (e.g., transmit power) in a CM as a result of the receipt (or non-receipt) of an RNG-RSP is considered to be implementation-dependent with the following restrictions (refer to Section 0):

- All parameters MUST be within the approved range at all times
- Power adjustment MUST start from the minimum value unless a valid power is available from non-volatile storage, in which case this MUST be used as a starting point.
- Power adjustment MUST be capable of being reduced or increased by the specified amount in response to RNG-RSP messages.
- If power is adjusted to the maximum value it MUST wrap back to the minimum.

7.2.5 Establish IP Connectivity

At this point, the CM MUST invoke DHCP mechanisms [RFC-1541] in order to obtain an IP address and any other parameters needed to establish IP connectivity. The DHCP response MUST contain the name of a file which contains further configuration parameters. Refer to Figure 0-9.

```
CM                                                                  DHCP


send DHCP request to
broadcast address
                          ----------------DHCP discover------------>
                                                                    check CM MAC address & respond
                          <--------------DHCP offer ----------------
choose server
                          ----------------DHCP request-------------->
                                                                    process request
                          <--------------DHCP response--------------
set up IP parameters from
DHCP response
```

Figure 0-9. Establishing IP Connectivity

7.2.6 Establish Time of Day

The CM and CMTS need to have the current date and time. This need not be authenticated and need only be accurate to the nearest second [MCNS2].
This is required for :

- Time-stamping logged events which can be retrieved by the management system
- Key management by the security system.

The protocol by which the time of day is retrieved will be as defined in [RFC-868]. Refer to Figure 0-10.
The request and response will be transferred using UDP.

The time retrieved from the server (UTC) will be combined with the time offset received from the DHCP response to create the current local time.

```
CM                                                                  Time Server


send request to time server

                          ---------------time of day request------------>

                                                                    process request

                          <--------------time of day response--------------

set up / correct time of day
from response
```

Figure 0-10. Establishing Time of Day

7.2.7 Establish Security Association

If security is required on the network and no security association has been established, the CM MUST establish a security association at this point. The IP address of the security server (or servers) MUST be provided as part of the DHCP response. The procedures required are fully defined in [MCNS2].

7.2.8 Transfer Operational Parameters

After the DHCP and security association operations are successful, the modem MUST download the parameter file using TFTP, as shown in Figure 0-11. The TFTP configuration parameter server is specified by the “siaddr” field of the DHCP response.
The parameter fields required in the DHCP response and the format and content of the configuration file MUST be as defined in Appendix C. Note that these fields are the minimum required for interoperability.

7.2.9 Registration

A CM MUST be authorized to forward traffic into the network once it is initialized, authenticated and configured. Refer to Figure 0-11.
The configuration parameters downloaded to the CM MUST include a network access control object (see Appendix C Section C.8.5). If this is set to “no forwarding”, the CM MUST not forward data to the network. It MUST respond to network management requests. This allows the CM to be configured in a mode in which it is manageable but will not forward data.
The CM MUST forward the operational parameters to the CMTS as part of a registration request. The CMTS MUST perform the following operations to confirm the CM authorization:

- Check the MAC and the authentication signature on the parameter list
- Build a profile for the modem based on the standard configuration settings (see Appendix C)
- Assign a service ID based on the classes of service supported
- Reply to the modem registration request.

Vendor-specific configuration settings MUST be ignored (except for inclusion in message authorization code calculation).

CM		CMTS		TFTP
				Server
request parameter file				
	----------	----TFTP REQ-----	---------->	
				process request
	<----------	--- TFTP RSP----	----------	
set up operational parameters				
inform CMTS	---REG-REQ-->			
		provision modem		
	<---REG-RSP--			
set up Service IDs				

Figure 0-11. Transferring Operational Parameters and Registration

7.2.10 Service IDs During CM Initialization

After completion of the Registration process (Section 0), the CM will have been assigned Service IDs (SIDs) to match its class of service provisioning. However, the CM must complete a number of protocol transactions prior to that time (e.g., Ranging, DHCP, etc.), and requires a temporary Service ID in order to complete those steps.

On reception of an Initial Ranging Request, the CMTS MUST allocate a temporary SID and assign it to the CM for initialization use. The CMTS MAY monitor use of this SID and restrict traffic to that needed for initialization. It MUST inform the CM of this assignment in the Ranging Response.

On receiving a Ranging Response addressed to it, the CM MUST use the assigned temporary SID for further initialization transmission requests until the Registration Response is received.

It is possible that the Ranging Response may be lost after transmission by the CMTS. The CM MUST recover by timing out and re-issuing its Initial Ranging Request. Since the CM is uniquely identified by the source MAC address in the Ranging Request, the CMTS MAY immediately re-use the temporary SID previously assigned. If the CMTS assigns a new temporary SID, it MUST make some provision for aging out the old SID that went unused (see Section 0).

When assigning class-of-service-provisioned SIDs on receiving a Registration Request, the CMTS may re-use the temporary SID, assigning it to one of the class of service classes requested. If so, it MUST continue to allow initialization messages on that SID, since the Registration Response could be lost in transit. If the CMTS assigns all-new SIDs for class-of-service provisioning, it MUST age out the temporary SID. The aging-out MUST allow sufficient time to complete the registration process in case the Registration Response is lost in transit.

7.2.11 Multiple-Channel Support

In the event that more than one downstream signal is present in the system, the CM MUST operate using the first valid downstream signal that it encounters when scanning. It will be instructed via the parameters in the configuration file (see Appendix C) to shift operation to different downstream and/or upstream frequencies if necessary.
Both upstream and downstream channels MUST be identified where required in MAC management messages using channel identifiers.

7.2.12 Remote RF Signal Level Adjustment

RF signal level adjustment at the CM is performed through a periodic maintenance function using the RNG-REQ and RNG-RSP MAC messages. This is similar to initial ranging and is shown in Figure 0-12 and Figure 0-13. On receiving a RNG-RSP, the CM MUST NOT transmit until the RF signal has been adjusted in accordance with the RNG-RSP and has stabilized (refer to Section 0).

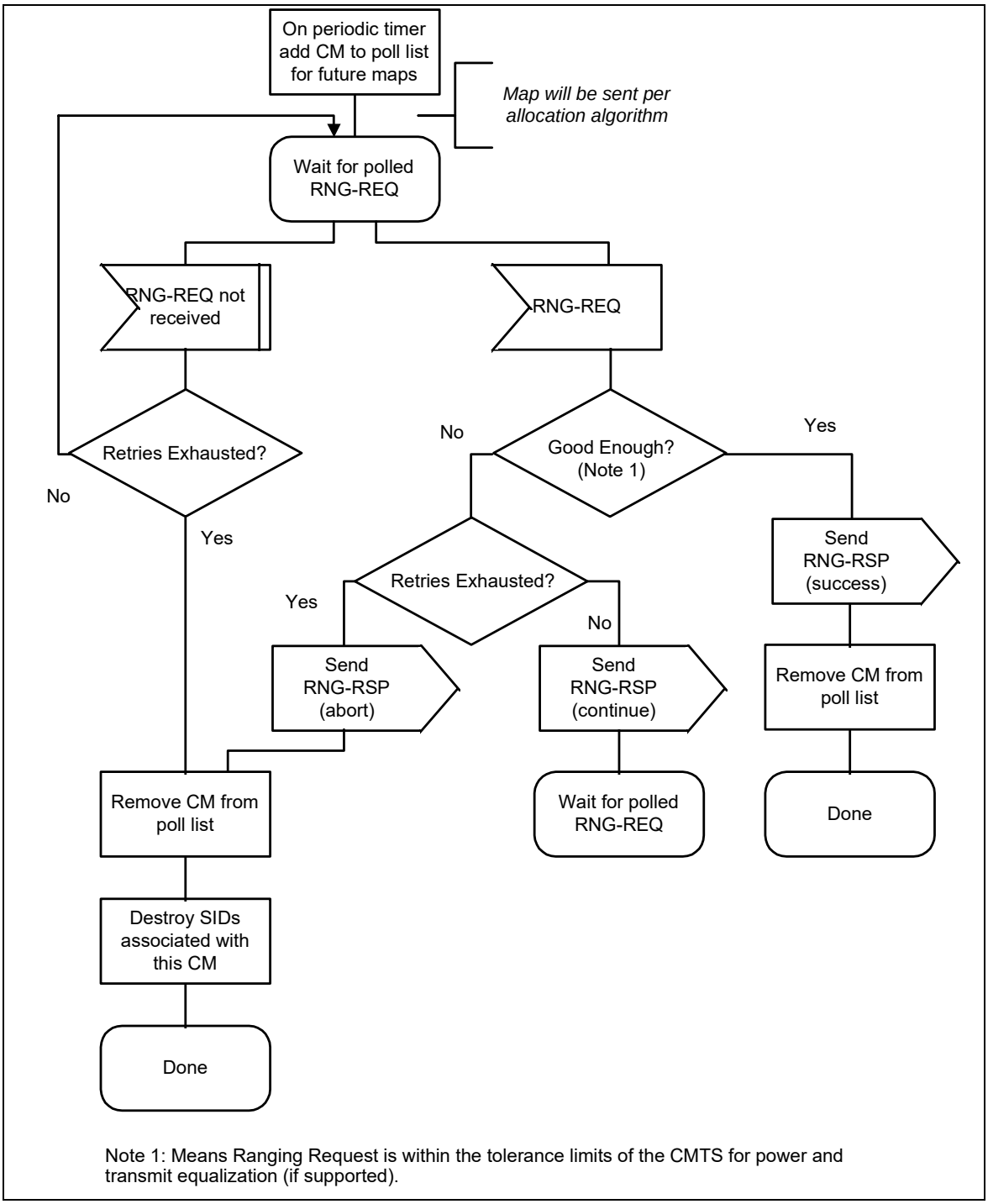

Figure 0-12. Periodic Ranging - CMTS

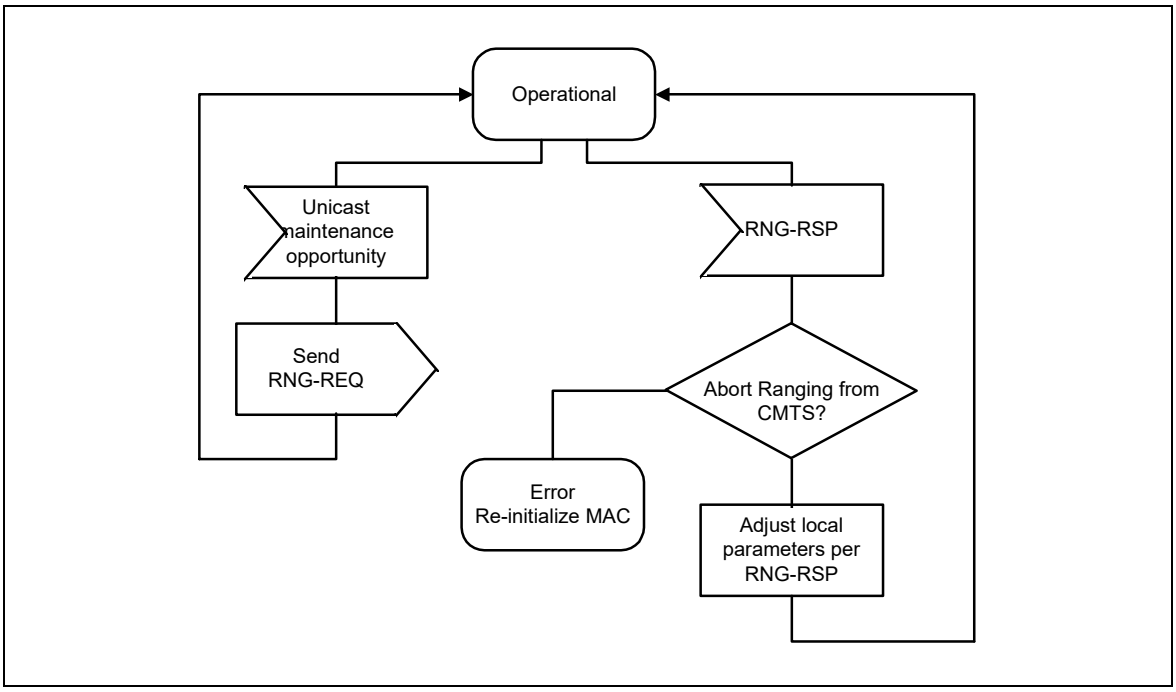

Figure 0-13. Periodic Ranging - CM View

7.2.13 Changing Upstream Burst Parameters

Whenever the CMTS is to change any of the upstream burst characteristics, it must provide for an orderly transition from the old values to the new values by all CMs. Whenever the CMTS is to change any of the upstream burst values, it MUST:

- Announce the new values in an Upstream Channel Descriptor message. The Configuration Change Count field must be incremented to indicate that a value has changed.

After transmitting one or more UCD messages with the new value, the CMTS transmits a MAP message with a UCD Count matching the new Configuration Change Count. The first interval in the MAP MUST be a data grant of at least 1 millisecond to the null Service ID (zero). That is, the CMTS MUST allow one millisecond for cable modems to change their PMD sublayer parameters to match the new set. This millisecond is in addition to other MAP timing constraints (see Section 0).

- The CMTS MUST NOT transmit MAPs with the old UCD Count after transmitting the new UCD.

The CM MUST use the parameters from the UCD corresponding to the MAP's "UCD Count" for any transmissions it makes in response to that MAP. If the CM has, for any reason, not received the corresponding UCD, it cannot transmit during the interval described by that MAP.

7.2.14 Changing Upstream Channels

At any time after registration, the CMTS MAY direct the CM to change its upstream channel. This may be done for traffic balancing, noise avoidance, or any of a number of other reasons which are beyond the scope of this specification. Figure 0-14 shows the procedure that MUST be followed by the CMTS. Figure 0-15 shows the corresponding procedure at the CM.

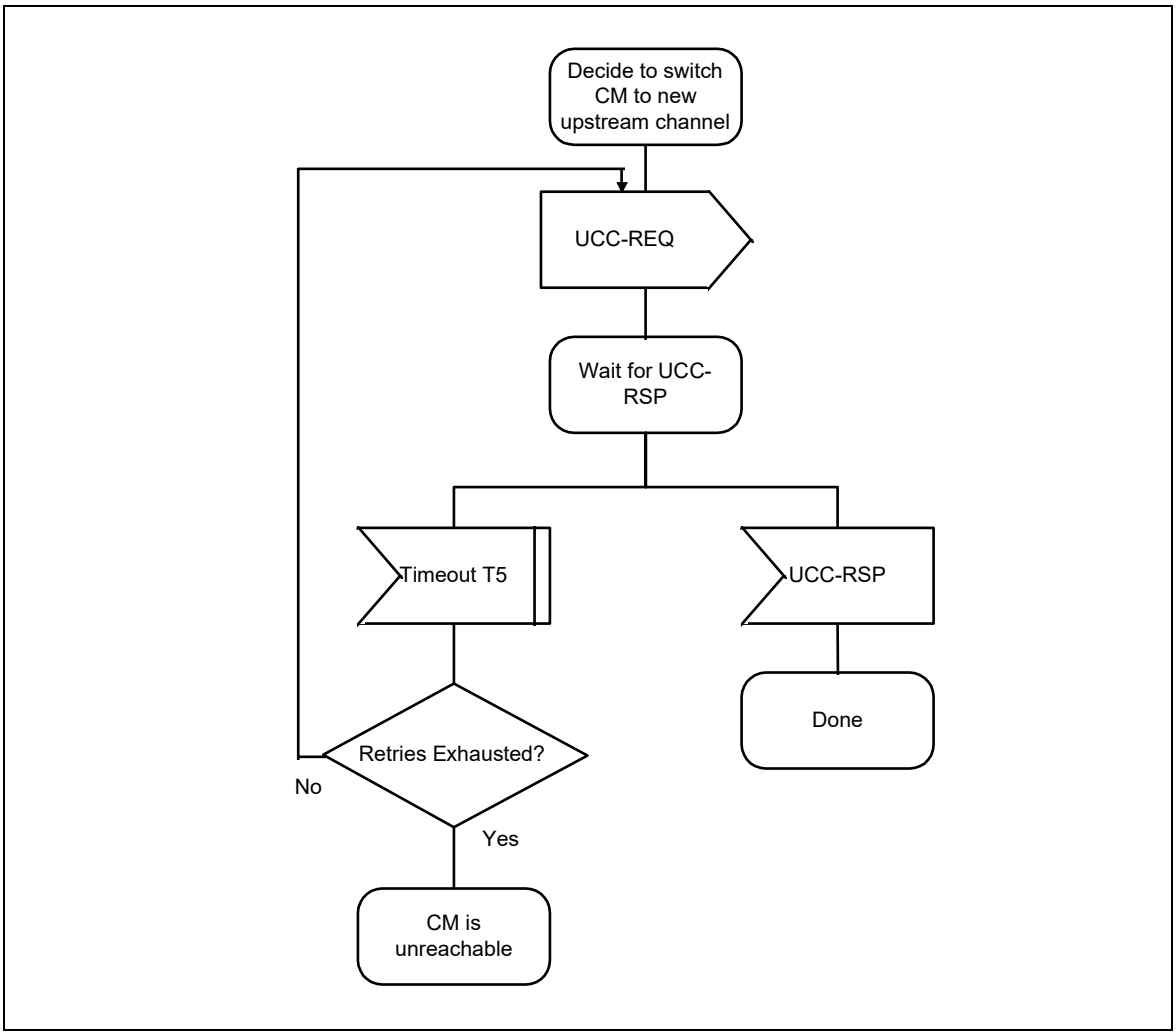

Figure 0-14. Changing Upstream Channels: CMTS View

Note that if the CMTS retries the UCC-REQ, the CM may have already changed channels (if the UCC-RSP was lost in transit). Consequently, the CMTS MUST listen for the UCC-RSP on both the old and the new channels.

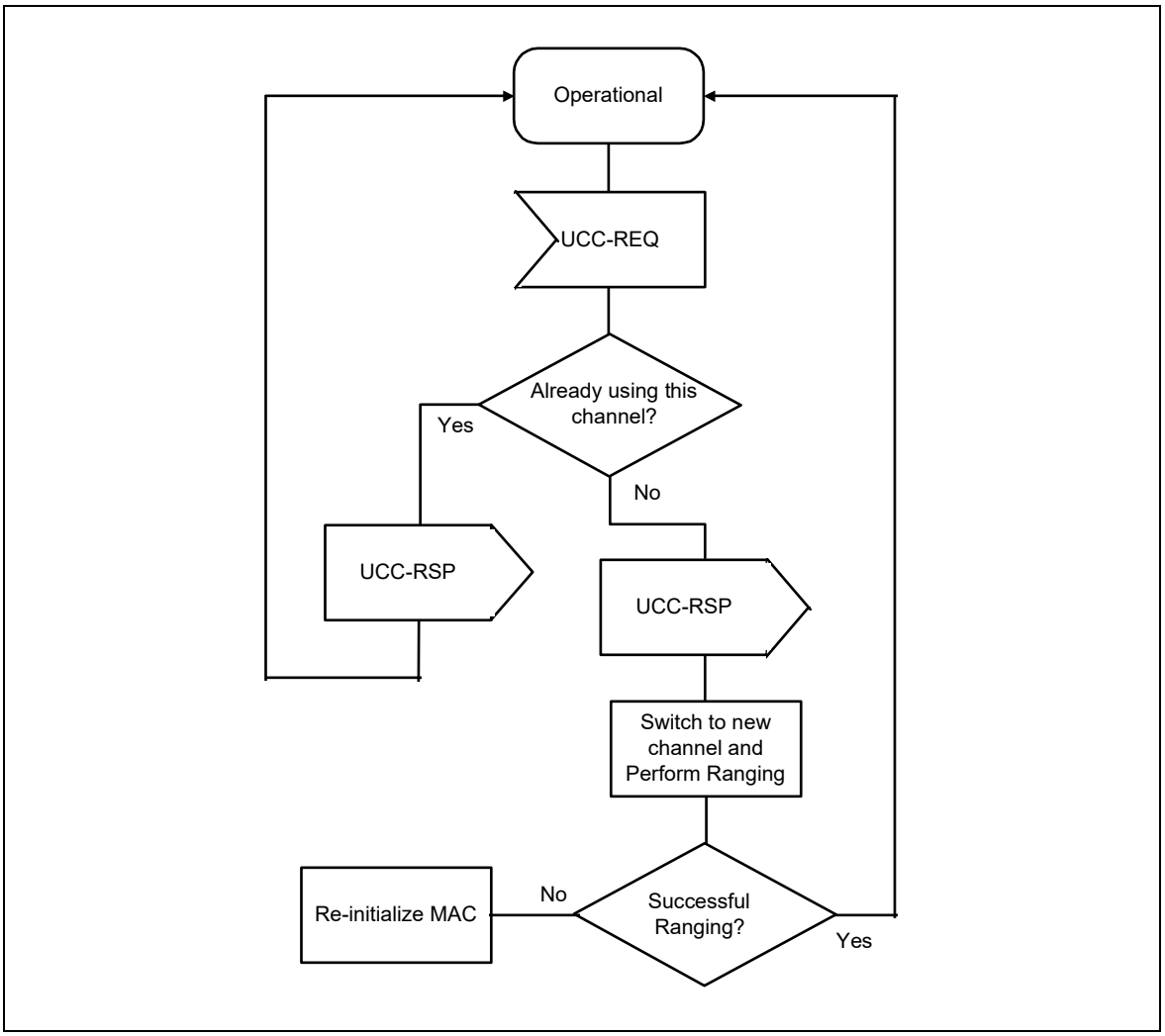

Figure 0-15. Changing Upstream Channels: CM View

The CM MUST successfully establish initial ranging on a new channel before using that channel. It MUST NOT perform re-registration, since its provisioning and MAC domain remain valid on the new channel. If the CM has previously established ranging on the new channel, and if that ranging on that channel is still current (T4 has not elapsed since the last successful ranging), then the CM MAY use cached ranging information and may omit initial ranging.

7.2.15 Fault Detection and Recovery

Fault detection and recovery occurs at multiple levels.

- At the physical level, FEC is used to correct errors where possible - refer to Section 0 for details.
- The MAC protocol protects against errors through the use of checksum fields across both the MAC Header and the data portions of the packet - refer to Section 0 for details.
- All MAC management messages are protected with a CRC covering the entire message, as defined in Section 0. Any message with a bad CRC MUST be discarded by the receiver.

Table 7-1 shows the recovery process that MUST be taken following the loss of a specific type of MAC message.

Table 0-1. Recovery Process on Loss of Specific MAC Messages

Message Name	Action Following Message Loss
SYNC	The CM can lose SYNC messages for a period of the loss SYNC interval (see Appendix B) before it has lost synchronization with the network. When this occurs, it follows the same procedures to reacquire connectivity as during initialization
UCD	A CM MUST receive a valid UCD before transmitting on the upstream. Failure to receive a valid UCD within the timeout period MUST cause the modem to reset and reinitialize its MAC connection.
MAP	A CM MUST NOT transmit without a valid upstream bandwidth allocation. If a MAP is missed due to error, the CM MUST NOT transmit for the period covered by the MAP. Failure to receive a valid MAP within the timeout period MUST cause the modem to reset and reinitialize its MAC connection.
RNG-REQ RNG-RSP	If a CM fails to receive a valid ranging response within a defined timeout period after transmitting a request, the request MUST be retried a number of times (as defined in Appendix B). Failure to receive a valid ranging response after the requisite number of attempts MUST cause the modem to reset and reinitialize its MAC connection.
REG-REQ REG-RSP	If a CM fails to receive a valid registration response within a defined timeout period after transmitting a request, the request will be retried a number of times (as defined in Appendix B). Failure to receive a valid registration response after the requisite number of attempts will cause the modem to reset and reinitialize its MAC connection.
UCC-REQ UCC-RSP	If a CMTS fails to receive a valid upstream channel change response within a defined timeout period after transmitting a request, the request MUST be retried a number of times (as defined in Appendix B). Failure to receive a valid response after the requisite number of attempts MUST cause the CMTS to consider the CM as unreachable.

Messages at the network layer and above are considered to be data packets by the MAC Sublayer. These are protected by the CRC field of the data packet and any packets with bad CRCs are discarded. Recovery from these lost packets is in accordance with the upper layer protocol.

7.2.16 Prevention of Unauthorized Transmissions

A CM SHOULD include a means for terminating RF transmission if it detects that its own carrier has been on continuously for longer than the longest possible valid transmission.

This page intentionally left blank

8. Supporting Future New Cable Modem Capabilities

8.1 Setting Up Communications on an Enhanced Basis

In the future, new types of CM or CMTS with enhanced characteristics may be introduced. Future-proofing is provided, in the protocols described herein, to permit these new types of CM or CMTS to set up communication on an enhanced basis.
Two methods are provided to accomplish this: one for use when the downstream channel supports upstream channels of varying capability and the other for the case where enhanced downstream channels are available.

8.1.1 Upstream Enhanced / Downstream Standard

The procedure MUST be as follows.

a) The enhanced CM acquires a standard downstream CMTS signal.

b) The CM receives and interprets upstream channel descriptor (UCD) messages forwarded from the CMTS until it finds one for a channel with the enhanced characteristics which it wishes to use. It joins the upstream transmission stream of this channel which has been assigned to enhanced CMs in accordance with the information in the downstream CMTS signal.

8.1.2 Downstream Enhanced / Upstream Enhanced or Standard

The procedure MUST be as follows.

a) The enhanced CM acquires a standard downstream CMTS signal.

b) The CM receives and interprets upstream channel descriptor (UCD) messages forwarded from the CMTS until it finds one for a channel with the best match to the enhanced characteristics which it wishes to use. It joins the upstream transmission stream of this channel which has been assigned to enhanced CMs in accordance with the information in the downstream CMTS signal.

c) The enhanced CM interacts with the provisioning server for the purposes of agreeing upon the operating frequencies, modulation, data rate and other characteristics for enhanced operation.

d) The enhanced CM changes operating frequencies and other characteristics accordingly, if necessary, and commences enhanced operation on a different downstream channel if necessary under conditions that will not interfere with the standard CMs.

e) The CM acquires the new downstream CMTS signal and waits on appropriate UCD on this new channel.

8.2 Downloading Cable Modem Operating Software

A CMTS SHOULD be capable of being remotely reprogrammed in the field via a software download via the network.

The cable modem device MUST be capable of being remotely reprogrammed in the field via a software download over the network. This software download capability MUST allow the functionality of the cable modem to be changed without requiring that cable system personnel physically revisit and reconfigure each unit. It is expected that this field programmability will be used to upgrade cable modem software to improve performance, accommodate new functions and features (such as enhanced class of service support), correct any design deficiencies discovered in the software, and to allow a migration path as the Data Over Cable Interface Specification evolves.

The mechanism used for download MUST be TFTP file transfer. The mechanism by which transfers are secured and authenticated is in [MCNS2]. The transfer MUST be initiated in one of two ways:

- An SNMP manager requests the CM to upgrade.
- The configuration parameter file delivered to the CM from the provisioning server MUST include the desired filename from which the desired software image can be retrieved. If the filename does not match the current software image of the CM, the CM MUST request the specified file from a TFTP server.

The CM MUST write the new software image to non-volatile storage. Once the file transfer is complete, the CM MUST restart itself with the new code image.

If the CM is unable to complete the file transfer for any reason, it MUST remain capable of accepting new software downloads, even if power is interrupted between attempts. The CM MUST log the failure and MAY report it asynchronously to the network manager.

Following upgrade of the operational software, the CM MAY need to follow one of the procedures described above in order to change channels to use the enhanced functionality.

If the CM is to continue to operate in the same upstream and downstream channels as before the upgrade, then it MUST be capable of inter-working with other CMs which MAY be running previous releases of software.

Where software has been upgraded to meet a new version of the specification, then it is critical that it MUST inter-work with the previous version in order to allow a gradual transition of units on the network.

The periodic SYNC message transmitted on the downstream channel MUST indicate the protocol revision at which the channel is operating.

9. Provision for Other Future Capabilities

It is anticipated that cable modem networks will, in the future, support capabilities that cannot be adequately defined today. These capabilities may include:

- New physical-layer modulation encoding.
- Improvements to, or new configuration settings within, the defined physical-layer encoding.
- Differing traffic flows and classes of service (e.g., STM telephony).

It is the intent of this specification to provide for interoperability with future devices and networks to whatever extent is practical. The minimum level of interoperability is that future-capability modems and modems conforming to this specification are assigned to different frequency bands, and all modems can automatically scan to find a congenial frequency band.

9.1 Anticipated Physical-Layer Changes

Existing MAC signaling provides for optional transmitter equalization (see Section 0). Other forms of upstream transmission manipulation, such as Tomlinson-Harashima precoding, may be developed in the future. Signaling to support such can be added as optional TLV-encodings for the Ranging Response message.

This configuration setting can be phased into existing networks without placing new requirements on existing devices.

When developing a new network, it may be necessary to know modem capabilities before coming to rely on a feature like this. The “Modem Capabilities” mask, exchanged as part of the CM-to-CMTS registration process (see Section 0) is intended to provide this information.

9.1.1 Adding Upstream Channel and Burst Configuration Settings

In future, configuration settings may be provided for new upstream channel characteristics:

- Higher-symbol-rate signaling

and new upstream burst characteristics:

- Trellis-coded modulation (2 bits/symbol and 4 bits/symbol)
- Interleaving within a burst.

These are defined through new encodings of the Upstream Channel Descriptor. A CM which finds characteristics which it does not implement is required to either abstain from that burst type, or to find a different upstream channel (see Section 0). This is also controllable by administrative policy if enough commonality is present to complete the registration process.

As with transmission precoding, a modem-capabilities flag may be needed if the CMTS is to choose least-common-denominator capability.

9.1.1.1 Channel Burst Parameters for Advanced Modems

Configuration settings for channel burst parameters for advanced modems are given in Table 0-1.

Table 0-1. Channel Burst Parameters for Advanced Modems

Parameter	Configuration Settings
Modulation (additional configuration settings)	Trellis Coded Modulation available 1) 8PSK--2 bits/s (analogous to QPSK) 2) 32QAM--4 bits/s (analogous to 16QAM) 2 encoder configuration settings available for each.
Interleaving N rows by M columns transmitter fills columns	 N = 0 to 255; 0 = no interleaving M = 1 to 256
Tomlinson-Harashima Precoding	(1) TH Precoding (2) Conventional Transmit FIR Equalization (3) None

It should be possible to program these capabilities separately to users on a given channel. For example, two users should be able to be commanded to operate at a given channel frequency and symbol rate, with one user having any or all of these features: 8PSK TCM, Interleaving, and TH Precoding; while the other user employs QPSK and none of the other features (i.e., this user is not an advanced cable modem).

9.1.2 Downstream Channel Improvements

Downstream channel improvements may require additional frequencies to implement for interoperability. The modem initialization process defined herein provides that if the CM is unable to complete satisfactory exchanges with the CMTS then it will scan for a more suitable frequency (see Section 0).

9.2 New Network Service Requirements

The types of network service expected on a cable network are apt to change over the life-time of equipment conforming to this specification. This specification anticipates use of ATM-style traffic parameters by giving the CMTS centralized control over bandwidth allocation and jitter. Future networks may include classes of data other than those explicitly provided (802-like and ATM). These may be implemented by using the Reserved code point in the MAC FC field. Because this specification does not require a particular bandwidth allocation algorithm, future algorithms may be developed which take into account policies and traffic types that are not yet well-understood.

9.2.1 Multicast Service IDs

Multicast Service IDs provide extensibility to the interval usage codes that are defined herein in the upstream bandwidth allocation map. The multicast ID reflects, not just group membership, but also the access rules that apply to whatever interval is assigned to that ID. The following examples of Request/Data IEs illustrate some of the possibilities for use of a particular ID:

- The grant is for contention space for all high-priority (as defined locally) data PDUs from a select group of CMs.
- The grant is for ATM cells only.

It may be necessary to develop an extension to the MAC signaling protocol to distribute the definition of attributes associated with particular multicast Service IDs.

9.2.2 RSVP Support for Upstream Traffic

The Resource ReSerVation Protocol (RSVP) is a resource reservation setup protocol currently being standardized by the Internet Engineering Task Force. RSVP provides receiver-initiated setup of resource reservations for multicast and unicast data flows. This section serves to anticipate and guide the definition of new MAC management messages to support resource reservation for upstream traffic in the Data-over-Cable context.
RSVP assumes the implementation of two modules on each RSVP-capable node to forward data packets: the “packet classifier” and the “packet scheduler”. The packet classifier determines the route and class-of-service class for each packet, and sends the packet to the packet scheduler. The RSVP packet classifier uses a “filter spec” (which matches a particular source IP address and TCP/UDP port number) to classify and restrict traffic that consumes reservation resources. The packet scheduler makes packet forwarding decisions (e.g., queuing decisions) to achieve the promised class of service on the interface. The RSVP packet scheduler uses a “flow spec” (which identifies token bucket parameters, peak data rate, etc.) to identify the desired class of service.
In the context of RSVP for upstream traffic in the data-over-cable system, it is desirable for the CM to perform the “packet classifier” function; however the CMTS should perform most of the “packet scheduler” function. The support for this split of functions suggests the future definition of three new MAC management messages: “Dynamic Service Addition”, “Dynamic Service Deletion”, and “Dynamic Service Response.”
The Dynamic Service Addition message is periodically transmitted from the CMTS to the CM to announce the allocation of a new SID. The Dynamic Service Addition message contains the new SID value, and type/length/value fields which can encode the RSVP filter specification and RSVP “cleanup timeout” interval (to support the RSVP “soft state” approach). The CM is expected to use the new SID exclusively for upstream traffic that matches the filter specification. The CM should assume that the new SID is refreshed by the receipt of another Dynamic Service Addition message within the cleanup timeout interval; otherwise, the SID is ignored by the CM at the conclusion of the interval.
The Dynamic Service Deletion message is transmitted from the CMTS to the CM to delete an unused SID immediately (to support the RSVP explicit “teardown” message). The Dynamic Service Response message is transmitted from the CM to the CMTS to acknowledge receipt of a Dynamic Service Addition or Dynamic Service Deletion message.
The interaction between RSVP “Path” and “Resv” messages, and the Dynamic Service Addition and Dynamic Service Response messages, is proposed to be as follows:

1. The data flow source-node generates an RSVP Path message, and sends the message toward the data flow destination-node.

2. The CMTS intercepts the downstream RSVP Path message, stores “path state” from the message, updates the “previous hop address” in the message, and forwards the message.
3. The CM forwards the downstream RSVP Path message to the destination-node without processing.
4. The data flow destination-node receives the RSVP Path message, and replies with an RSVP Resv
   message to request a reservation of resources for the data flow from the source-node to itself. The RSVP Resv message is sent to the “previous hop” of the Path message – the CMTS.
5. The CM forwards the upstream RSVP Resv message to the CMTS without processing.
6. The CMTS receives the upstream RSVP Resv message, and processes the message flow spec using its “admission control” and “policy control” modules (in cooperation with the CMTS upstream bandwidth scheduler). The rest of this section assumes that the reservation message is accepted by the CMTS.
7. The CMTS sends the “Dynamic Service Addition” MAC message to the CM. The message includes a new SID and the “filter spec” from the RSVP Resv message.
8. The CM receives the “Dynamic Service Addition” MAC message, stores the new SID and “filter spec”, and sends the “Dynamic Service Response” MAC message to the CMTS.
9. The CMTS receives the “Dynamic Service Response” MAC message, and forwards the RSVP Resv message to its “previous hop.”

9.3 PID Filtering Capability

This specification uses a single well-known PID for all data-over-cable traffic. CMs MAY use additional PIDs for differentiation of traffic types or to provide streams to individual CMs. PID assignments MAY be facilitated by the appropriate MAC control message extensions. As an example, this could facilitate services that use MPEG packet-level encryption. Any such services are beyond the scope of this version of the specification.

An additional modem capability configuration setting could be added in the Registration Request (REG-REQ) message to indicate the number of PIDs, in addition to the well-known PID, that the CM can filter. A “0” would indicate that the CM can only filter on the well-known PID.

An extension to the encodings in the Registration Response (REG-RSP) could be used to assign to a CM additional PIDs on which to filter.

Appendix A - Well-Known Addresses

A.1 MAC Addresses

MAC addresses described here are defined using the Ethernet/ISO8802-3 convention as bit-little-endian.
The following multicast address MUST be used to address the set of all CM MAC sublayers; for example, when transmitting Allocation Map PDUs.

01-E0-2F-00-00-01

The following multicast address MUST be used to address all CMTSs within the MAC-sublayer domain:

01-E0-2F-00-00-02

Note that in nearly all cases the unicast CMTS address is preferred. The address range

01-E0-2F-00-00-03 through 01-E0-2F-00-00-0F

is reserved for future definition. Frames addressed to any of these addresses SHOULD NOT be forwarded out of the MAC-sublayer domain.

A.2 MAC Service IDs

The following MAC Service IDs have assigned meanings. Those not included in this table are available for assignment, either by the CMTS or administratively.

0x0000	Addressed to no CM
0x3FFF	Addressed to all CMs
0x3FF1-0x3FFE	Addressed to all CMs. Available for small data PDUs, as well as requests (used only with request/data IEs). The last digit indicates the frame length and transmission opportunities as follows:
0x3FF1	Within the interval specified, a transmission may start at any mini-slot, and must fit within one mini-slot.
0x3FF2	Within the interval specified, a transmission may start at every other mini-slot, and must fit within two mini-slots (e.g., a station may start transmission on the first mini-slot within the interval, the third mini-slot, the fifth, etc.).
0x3FF3	Within the interval specified, a transmission may start at any third mini-slot, and must fit within three mini-slots (e.g., starts at first, fourth, seventh, etc.).
0x3FF4	Starts at first, fifth, ninth, etc.
…	
0x3FFD	Starts at first, fourteenth (14th), twenty-seventh (27th), etc.
0x3FFE	Within the interval specified, a transmission may start at any 14th mini-slot, and must fit within 14 mini-slots.

A.3 MPEG PID and table_id

All MCNS data MUST be carried in MPEG-2 packets with the header PID field set to 0x1FFE.

The MPEG-2 Private Sections carrying the MCNS Frames MUST have the first byte (table_id) set to 0x40.

Appendix B - Parameters and Constants

System	Name	Time Reference	Minimum Value	Default Value	Maximum Value
CMTS	Sync Interval	Time between transmission of SYNC messages (ref. 0)			200 msec
CMTS	UCD Interval	Time between transmission of UCD messages (ref. 0)			2 sec
CMTS	Max MAP Pending	The number of mini-slots that a CMTS is allowed to map into the future (ref. 0)			4096 mini-slot times
CMTS	Ranging Interval	Time between transmission of broadcast Ranging requests (ref. 0)			2 sec
CM	Lost Sync Interval	Time since last received Sync message before synchronization is considered lost			600 msec
CM	Contention Ranging Retries	Number of Retries on contention Ranging Requests (ref. 0)	16		
CM, CMTS	Invited Ranging Retries	Number of Retries on inviting Ranging Requests (ref. 0)	16		
CM	Request Retries	Number of retries on bandwidth allocation requests	16		
CM	Data Retries	Number of retries on immediate data transmission	16		
CMTS	CM MAP processing time	Time provided between arrival of the last bit of a MAP at a CM and effectiveness of that MAP (ref. 0)	200 μs		
CMTS	CM Ranging Response processing time	Minimum time allowed for a CM following receipt of a ranging response before it is expected to reply to an invited ranging request	1 msec		
CM	T1	Wait for UCD timeout			5 * UCD interval maximum value
CM	T2	Wait for broadcast ranging timeout			5 * ranging interval
CM	T3	Wait for ranging response	50 msec	200 msec	200 msec
CM	T4	Wait for unicast ranging opportunity			5 * ranging interval
CMTS	T5	Wait for Upstream Channel Change response			2 sec
CM CMTS	Mini-slot size	Size of mini-slot for upstream transmission. Must be a power of 2 (in units of the Timebase Tick)	32 symbol times		
CM CMTS	Timebase Tick	System timing unit	6.25 μsec		

This page intentionally left blank.

Appendix C - CM Configuration Interface Specification

C.1 DHCP Fields Used by the CM

The following fields are required in the DHCP request from the CM.

- The hardware type SHOULD be set to Ethernet.
- The hardware address of the CM (used as the key to identify the CM during the DHCP process)

The following fields are required in the DHCP response returned to the CM.

- The IP address to be used by the CM.
- The subnet mask to be used by the CM.
- If the DHCP server is on a different network (requiring a relay agent), then the relay agent MUST set the gateway address field of the DHCP response.
- The name of the CM configuration file to be read from the TFTP server by the CM.
- The time offset of the CM from Universal Coordinated Time (UTC) -- used by the CM to calculate the local time to use in time-stamping error logs.
- Time-server option -- provides a list of [RFC-868] time-servers from which the current time may be obtained.
- The IP address of the next server to use in the bootstrap process (TFTP server) is returned in the siaddr field.
- The IP address of the security server SHOULD be set if security is required. This is encoded using the code 128 (which is reserved for site specific information per reference [RFC-1533]) as shown below.

type	length	value
128	4	ip1,ip2,ip3,ip4

C.2 CM Binary Configuration File Format

The CM-specific configuration data MUST be contained in a file which is downloaded to the CM via TFTP. This is a binary file in the same format defined for DHCP vendor extension data [RFC-1533].

It MUST consist of a number of configuration settings (1 per parameter) each of the form

type: length: value

where type is a single-octet identifier which defines the parameter
length is a single octet containing the length of the value field (not including type and length fields)
value is from one to 254 octets containing the specific value for the parameter

The configuration settings MUST follow each other directly in the file, which is a stream of octets (no record markers).
Configuration settings are divided into three types:

- Standard configuration settings which MUST be present
- Standard configuration settings which MAY be present
- Vendor-specific configuration settings.

CMs MUST be capable of processing all standard configuration settings.
Authentication of the provisioning information is provided by two message integrity check (MIC) configuration settings, CM MIC and CMTS MIC.

- CM MIC is a digest which ensures that the data sent from the provisioning server were not modified en route. This is NOT an authenticated digest (it does not include any shared secret).
- CMTS MIC is a digest used to authenticate the provisioning server to the CMTS during registration. It is taken over a number of fields one of which is a shared secret between the CMTS and the provisioning server.

Use of the CM MIC allows the CMTS to authenticate the provisioning data without needing to receive the entire file.
Thus the file structure is of the form shown in Figure C-1:

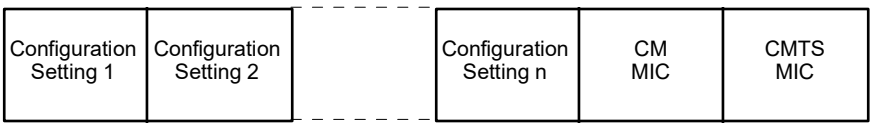

Figure C-1. Binary Configuration File Format

Not all configuration settings need to be present in a given file.

C.3 Configuration File Settings

The following configuration settings MUST be included in the configuration file and MUST be supported by all CMs.

- Downstream Frequency Configuration Setting
- Upstream Channel ID Configuration Setting
- Network Access Configuration Setting
- End Configuration Setting

The following configuration settings MAY be included in the configuration file and if present MUST be supported by all CMs.

- Class of Service Configuration Setting
- Vendor ID Configuration Setting
- Software Upgrade Filename Configuration Setting

- SNMP Write-Access Control
- SNMP MIB Object
- Pad Configuration Setting

The following configuration settings MAY be included in the configuration file and if present MAY be supported by a CM.

- Vendor-Specific Configuration Settings

C.4 Configuration File Creation

The sequence of operations required to create the configuration file is as shown in Figures C-1 through C-5..

1) Create the type/length/value entries for all the parameters required by the CM.

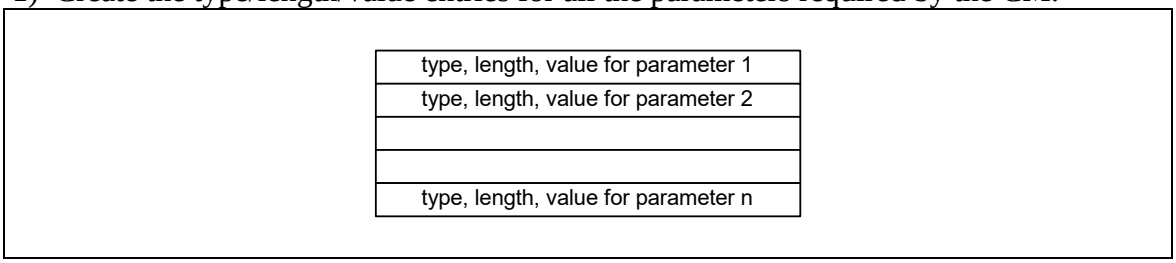

Figure C-2. Create TLV Entries for Parameters Required by the CM

2) Calculate the CM message integrity check (MIC) configuration setting as defined in Section C.5 and add to the file following the last parameter using code and length values defined for this field.

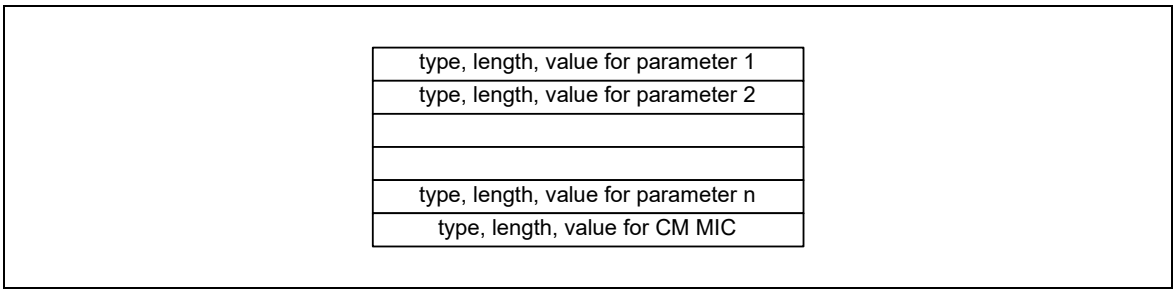

Figure C-3. Add CM MIC

3) Calculate the CMTS message integrity check (MIC) configuration setting as defined in Section C.6 and add to the file following the CM MIC using code and length values defined for this field.

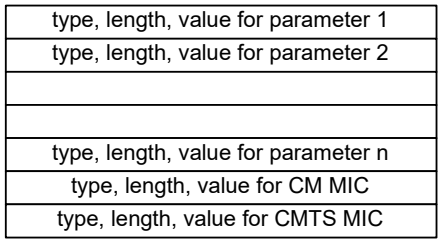

Figure C-4. Add CMTS MIC

4) Add the end of data marker.

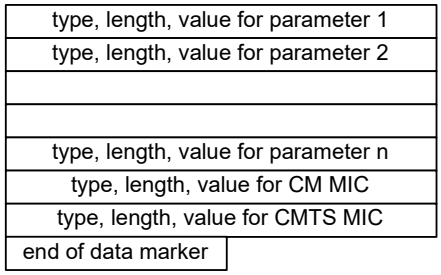

Figure C-5. Add End of Data Marker

C.5 CM MIC Calculation

The CM message integrity check configuration setting MUST be calculated by performing an MD5 digest over the following configuration setting fields in the order shown, treated as if they were contiguous data:

- Downstream Frequency Configuration Setting
- Upstream Channel ID Configuration Setting
- Network Access Configuration Setting
- Class of Service Configuration Setting
- Software Upgrade Filename Configuration Setting
- SNMP Write-Access Control
- SNMP MIB Object
- Vendor ID Configuration Setting
- Vendor-Specific Configuration Settings.

The digest MUST be added to the configuration file as its own configuration setting field using the CM MIC Configuration Setting encoding.
On receipt of a configuration file, the CM MUST recompute the digest and compare it to the CM MIC configuration setting in the file. If the digests do not match then the configuration file MUST be discarded.

C.6 CMTS MIC Calculation

The CMTS message integrity check configuration setting MUST be calculated by performing an MD5 digest over the following configuration setting fields in the order shown, treated as if they were contiguous data:

- Downstream Frequency Configuration Setting
- Upstream Channel ID Configuration Setting
- Network Access Configuration Setting
- Class of Service Configuration Setting
- Vendor ID Configuration Setting
- Vendor specific Configuration Settings
- CM MIC Configuration Setting
- Authentication string.

The digest MUST be added to the configuration file as its own configuration setting field using the CMTS MIC Configuration Setting encoding.
The authentication string is a shared secret between the provisioning server (which creates the configuration files) and the CMTS. It allows the CMTS to authenticate the CM provisioning.
The mechanism by which the shared secret is managed is up to the system operator.
On receipt of a configuration file, the CM MUST forward the CMTS MIC as part of the registration request (REG-REQ).
On receipt of a REG-REQ, the CMTS MUST recompute the digest over the included fields and the authentication string and compare it to the CMTS MIC configuration setting in the file. If the digests do not match, the registration request MUST be rejected by setting the authentication failure result in the registration response status field.

C.6.1 Digest Calculation

The digest fields MUST be calculated using the mechanism defined in [RFC-2104].

C.7 Registration Configuration Settings

The following configuration settings are used in the registration messages. Refer to Section 0 for details on these messages.

Registration Request

- Downstream Frequency Configuration Setting
- Upstream Channel ID Configuration Setting
- Network Access Configuration Setting
- Class of Service Configuration Setting
- Modem Capabilities Configuration Setting
- Vendor ID Configuration Setting

- Vendor specific extensions
- CM MIC
- CMTS MIC
- Modem IP address.

Registration Response

- Class of Service Configuration Setting
- Modem Capabilities Configuration Setting
- Vendor ID Configuration Setting
- Vendor-Specific extensions.

C.8 Encodings

The following type/length/value encodings MUST be used in both the configuration file and in CM registration requests and CMTS responses. All multi-octet quantities are in network-byte order, i.e., the octet containing the most-significant bits is the first transmitted on the wire.
The following configuration settings MUST be supported by all CMs which are compliant with this specification.

C.8.1 End-of-Data Marker

This is a special marker for end of data.
It has no length or value fields.

type
255

C.8.2 Pad Configuration Setting

This has no length or value fields and is only used following the end of data marker to pad the file to an integral number of 32-bit words.

type
0

C.8.3 Downstream Frequency Configuration Setting

The receive frequency to be used by the CM. It is an override for the channel selected during scanning. This is the center frequency of the downstream channel in Hz stored as a 32-bit binary number.

type	length	rx frequency
1	4	rx1 rx2 rx3 rx4

Valid Range
The receive frequency MUST be a multiple of 62500 Hz.

C.8.4 Upstream Channel ID Configuration Setting

The upstream channel ID which the CMTS MUST use. The CM MUST listen on the defined downstream channel until an upstream channel description message with this ID is found. It is an override for the channel selected during initialization.

type	length	value
2	1	channel ID

C.8.5 Network Access Control Object

If the value field is a 1 this CM is allowed access to the network; if a 0 it is not.

type	length	on / off
3	1	1 or 0

C.8.6 Class of Service Configuration Setting

This field defines the parameters associated with a class of service. It is somewhat complex in that is composed from a number of encapsulated type/length/value fields. The encapsulated fields define the particular class of service parameters for the class of service in question. Note that the type fields defined are only valid within the encapsulated class of service configuration setting string. A single class of service configuration setting is used to define the parameters for a single service class. Multiple class definitions use multiple class of service configuration setting sets.

type	length	value
4	n	

C.8.6.1 Internal Class of Service Encodings

C.8.6.1.1 Class ID

The value of the field specifies the identifier for the class of service to which the encapsulated string
applies.

type	length	value
1	1	

Valid Range

The class ID MUST be in the range 1 to 16.

C.8.6.1.2 Maximum Downstream Rate Configuration Setting

The value of the field specifies the maximum data rate in bit/sec allowed from this service class on the downstream path. That is, it is the peak data rate for Packet PDU data (including destination MAC address and the CRC) over a one-second interval. This is a limit on the modem, not a guarantee that this rate is available

type	length	value
2	4	

C.8.6.1.3 Maximum Upstream Rate Configuration Setting

The value of the field specifies the maximum data rate in bit/sec allowed from this service class on the upstream channel. That is, it is the peak data rate for Packet PDU data

(including destination MAC address and the CRC) over a one-second interval. This is a limit on the modem, not a guarantee that this rate is available.

type	length	value
3	4	

C.8.6.1.4 Upstream Channel Priority Configuration Setting

The value of the field specifies the relative priority assigned to this service class for data transmission in the upstream channel. Higher numbers indicate higher priority.

type	length	value
4	1	

Valid Range

0 -> 7

C.8.6.1.5 Guaranteed Minimum Upstream Channel Data Rate Configuration Setting

The value of the field specifies the data rate in bit/sec which will be guaranteed to this service class on the upstream channel.

type	length	value
5	4	

C.8.6.1.6 Maximum Upstream Channel Transmit Burst Configuration Setting

The value of the field specifies the maximum transmit burst (in units of mini-slots) which this service class is allowed on the upstream channel.

type	length	value
6	2	255

Valid Range

0 -> 255 for initial version.

Note: The 2-byte length field is retained to support possible future expansion of allowed burst sizes.

Table C-1. Sample Class of Service Encoding

Type	|Length	Value (sub)type	Length	Value	
4	28				class of service configuration setting
		1	1	1	service class 1
		2	4	10,000,000	max. forward rate of 10 Mb/sec
		3	4	2,000,000	max. return rate of 2 Mb/sec
		4	1	5	return path priority of 5
		5	4	64000	min guaranteed 64 kb/sec
		6	2	100	max. Tx burst of 100 mini-slots
4	28				class of service configuration setting
		1	1	2	service class 2
		2	4	5,000,000	max. forward rate of 5 Mb/sec
		3	4	1,000,000	max. return rate of 1 Mb/sec
		4	1	3	return path priority of 3
		5	4	32000	min guaranteed 32 kb/sec
		6	2	50	max. Tx burst of 50 mini-slots

C.8.7 Modem Capabilities Configuration Setting

The value field describes the capabilities of a particular modem, i.e., those OPTIONAL features which the modem can support. It is composed from a number of encapsulated type/length/value fields. The encapsulated fields define the specific capabilities for the modem in question. Note that the type fields defined are only valid within the encapsulated capabilities configuration setting string.

type	length	value
5	n	

The set of possible encapsulated fields is described below.

C.8.7.1 Concatenation Support

If the value field is a 1 this modem can support concatenation; if a 0 it can not.

type	length	on / off
1	1	1 or 0

Table C-2 Sample Capability Encoding

Type	Length	Value (sub)type	Length	Value	
5					modem capability configuration setting
		1	1	1	concatenation supported

C.8.8 CM Message Integrity Check (MIC) Configuration Setting

The value field contains the CM message integrity check code. This is used to detect unauthorized modification or corruption of the configuration file.

type	length	value
6	16	d1 d2 ..... d16

C.8.9 CMTS Message Integrity Check (MIC) Configuration Setting

The value field contains the CMTS message integrity check code. This is used to detect unauthorized modification or corruption of the configuration file.

type	length	value
7	16	d1 d2 ..... d16

C.8.10 Vendor ID Configuration Setting

The value field contains the vendor identification specified by the three-byte vendor-specific Organization Unique Identifier of the CM MAC address.

type	length	value
8	3	v1, v2, v3

C.8.11 Software Upgrade Filename

The filename of the software upgrade file for the CM. This is a filename only, not a complete path. The file should reside in the TFTP public directory.

type	length	value

9	n	filename

Note: Filename length MUST be less than or equal to 64 bytes.

C.8.12 SNMP Write-Access Control

This object makes it possible to disable SNMP "Set" access to individual MIB objects. Each instance of this object controls access to all of the writeable MIB objects whose Object ID (OID) prefix matches. This object may be repeated to disable access to any number of MIB objects.

type	length	value
10	n	OID prefix plus control flag

where n is the size of the ASN.1 Basic Encoding Rules [ISO8025] encoding of the OID prefix plus one byte for the control flag.
The control flag may take values:

0 - allow write-access
1 - disallow write-access

Any OID prefix may be used. The Null OID 0.0 may be used to control access to all MIB objects. (The OID 1.3.6.1 will have the same effect.)
When multiple instances of this object are present and overlap, the longest (most specific) prefix has
precedence. Thus, one example might be

someTable	disallow write-access
someTable.1.3	allow write-access

This example disallows access to all objects in someTable except for someTable.1.3.

C.8.13 SNMP MIB Object

This object allows arbitrary SNMP MIB objects to be Set via the TFTP-Registration process.

type	length	value
11	n	variable binding

where the value is an SNMP VarBind as defined in [RFC-1157]. The VarBind is encoded in ASN.1 Basic Encoding Rules, just as it would be if part of an SNMP Set request.
The cable modem MUST treat this object as if it were part of an SNMP Set Request with the following
caveats:

- It MUST treat the request as fully authorized (it cannot refuse the request for lack of privilege).
- SNMP Write-Control provisions (see previous section) do not apply.
- No SNMP response is generated by the CM.

This object MAY be repeated with different VarBinds to "Set" a number of MIB objects. All such Sets MUST be treated as if simultaneous.
Each VarBind MUST be limited to 255 bytes.

C.8.14 Vendor-Specific Information

Vendor-specific information for cable modems, if present, MUST be encoded in the configuration file using the vendor-specific information code (43) following the rules defined in [RFC-1533]. The vendor identifier field MUST be present if this configuration setting is used. This configuration setting MAY appear multiple times.

type	length	value
43	n	per vendor definition

C.8.15 Modem IP Address

This object informs the CMTS of the provisioned IP address of the cable modem.

type	length	value
12	4	IP Address

This object appears only in the Registration Request message.
This address plays no part in the protocols defined in this specification, but is included to assist with network management.

C.8.16 Service(s) Not Available Response

This configuration setting MUST be included in the Registration Response message if the CMTS is unable or unwilling to grant any of the requested classes of service that appeared in the Registration Request. Although the value applies only to the failed service class, the entire Registration Request MUST be considered to have failed (none of the class-of-service configuration settings are granted).

type	length	value
13	3	class ID, type, reason

where

class ID is the class-of-service class from the request which is not available

type is the specific class-of-service object within the class which caused the request to be rejected

reason is the reason for the rejection from the following:

reason-other(1)
reason-unrecognized-configuration--setting(2)
reason-temporary(3)
reason-permanent(4)

The reason codes MUST be used in the following way.

- Reason-other(1) is used when none of the other reason codes apply.
- Reason-unrecognized-configuration setting(2) is used when a class-of-service type is not recognized or when its value is outside of the specified range.
- Reason-temporary(3) indicates that the current loading of service IDs or traffic policies at the CMTS prevents granting the request, but that the request might succeed at another time.

- Reason-permanent(4) indicates that, for policy, configuration, or CMTS capabilities reasons, the request would never be granted unless the CMTS were manually reconfigured or replaced.

C.8.17 CPE Ethernet MAC Address

This object configures the CM with the Ethernet MAC address of a CPE device (see Section 0). This object may be repeated to configure any number of CPE device addresses.

type	length	value
14	6	Ethernet MAC Address of CPE

This object appears only in the configuration file.

This page intentionally left blank.

Appendix D - MAC Sublayer Service Definition

The MAC sublayer will provide the following services, consistent with [ISO/IEC15802-1]. This is an internal interface within the CM and CMTS and is provided for reference purposes only.

D.1 Service at the CM

The following service primitives are provided by the MAC sublayer to the higher-layer protocol entity. These represent an abstraction of the service provided and do not imply a particular implementation.

MAC_CM_802_DATA.request
MAC_CM_DIX_DATA.request
MAC_CM_ATM_DATA.request
MAC_CM_802_DATA.indication
MAC_CM_DIX_DATA.indication
MAC_CM_ATM_DATA.indication
MAC_CM_DATA.acknowledgment

D.2 MAC_CM_802_DATA.request

Issued by the higher-layer to request transmission from the CM on an upstream channel.
Parameters

- channel_ID - MAY be implicit if the device supports attachment to a single channel.
- service_ID
- contention_and_acknowledgment_constraints - specifies whether or not this request MAY be satisfied in a contention interval. Ordinarily, the CM will request that contention data be acknowledged by the CMTS.
- destination_address
- source_address (OPTIONAL) - if not explicitly overwritten, the address at this MSAP is used.
- LLC_pdu
- padding (OPTIONAL) - MAY be used if the LLC PDU is less than 60 bytes and it is desired to maintain ISO8802-3 transparency.
- frame_check_sequence (OPTIONAL) - MAY be supplied if ISO8802-3 transparency is desired. Otherwise, a 32-bit CRC sum is calculated by the MAC sublayer.
- length

D.3 MAC_CM_DIX_DATA.request

Issued by the higher-layer to request transmission from the CM on an upstream channel.
Parameters:

- channel_ID - MAY be implicit if the device supports attachment to a single channel.
- service_ID

- contention_and_acknowledgment_constraints - specifies whether or not this request MAY be satisfied in a contention interval. Ordinarily, the CM will request that contention data be acknowledged by the CMTS.
- destination_address
- source_address (OPTIONAL) - if not explicitly overwritten, the address at this MSAP is used.
- ethernet type
- ethernet_dix_pdu
- length

D.4 MAC_CM_ATM_DATA.request

Issued by the higher-layer to request transmission from the CM on an upstream channel. Parameters:

- channel_ID - MAY be implicit if the device supports attachment to a single channel.
- service_ID
- contention_and_acknowledgment_constraints - specifies whether or not this request MAY be satisfied in a contention interval. Ordinarily, the CM will request that contention data be acknowledged by the CMTS.
- one or more ATM cells. Cells need not be within the same virtual circuit or virtual path.
- length

D.5 MAC_CM_802_DATA.indication

Issued by the CM MAC to indicate reception of data from the downstream channel. Parameters:

- channel_ID - MAY be implicit if the device supports attachment to a single channel.
- destination_address
- source_address
- LLC_pdu
- padding (OPTIONAL) - MAY be present if the LLC PDU was less than 60 bytes and ISO8802-3 transparency was desired.
- frame_check_sequence
- length

D.6 MAC_CM_DIX_DATA.indication

Issued by the CM MAC to indicate reception of data from the downstream channel. Parameters:

- channel_ID - MAY be implicit if the device supports attachment to a single channel.
- destination_address

- source_address
- ethernet type
- ethernet_dix_pdu
- frame_check_sequence
- length

D.7 MAC_CM_ATM_DATA.indication

Issued by the CM MAC to indicate reception of data on the downstream channel. Parameters:

- channel_ID - MAY be implicit if the device supports attachment to a single channel.
- service_ID
- one or more ATM cells. Cells need not be within the same virtual circuit or virtual path.
- length

D.8 MAC_CM_DATA.acknowledgment

Issued by the CM MAC to indicate reception of an acknowledgment on the downstream channel. (An acknowledgment is an information element in a MAP PDU (see Section 0). The CMTS MUST include this IE in response to an upstream data transmission that includes an acknowledgment request.)
Parameters:

- channel_ID - The downstream channel on which the acknowledgment was received. May be implicit if the device supports attachment to a single channel.
- service_ID
- length

Appendix E -- Example Burst Profiles

E.1 Introduction

Tables E-1 through E-4 contain example Channel Burst Profiles for various modulation format and symbol rate combinations. The column labeled Column #1 in Tables E-1 through E-4 corresponds to the Request burst type. The other columns correspond to the Communication (or Data) burst type. Table E-5 contains example Channel Burst Profiles corresponding to Power-Up burst types, or Acquisition burst types (for use on a new channel—or simply for refinement of user-unique parameters).

A burst length of 0 mini-slots in the Channel Profile means that the burst length is variable on that channel for that burst type, and will be assigned by the CMTS for each burst.

A programmable 1024-bit-long preamble is included, common to the “immediately available” burst profiles, but with each burst profile able to specify the start location within this sequence of bits and the length of the preamble.

Table E-6 contains the frame formats for each of the symbol rates with QPSK modulation for the example Request burst and for three codeword lengths for the Communication bursts, with one codeword per burst. Additionally, frame formats are shown for each of the rates with two of the example codeword lengths with four codewords per burst. In each format example, the information rate of the burst is calculated and given in the table. For the Request burst, the 6 bytes of “data” are assumed to be the information, and the rest is overhead. In the Communication bursts, the preamble, spacing (guard time), FEC parity, and the example 6 bytes of MAC Header are assumed overhead for the purposes of calculating information rate.

Table E-7 is structured the same as Table E-6, but with the example formats for 16QAM modulation.

E.2 Example Preamble Sequence

The following is the example 1024-bit preamble sequence for tables E-1 through E-5:

Bits 1 through 128:
1100 1100 1111 0000 1111 1111 1100 0000 1111 0011 1111 0011 0011 0000 0000 1100
0011 0000 0011 1111 1111 1100 1100 1100 1111 0000 1111 0011 1111 0011 1100 1100

Bits 129 through 256:
0011 0000 1111 1100 0000 1100 1111 1111 0000 1100 1100 0000 1111 0000 0000 1100
0000 0000 1111 1111 1111 0011 0011 0011 1100 0011 1100 1111 1100 1111 0011 0000

Bits 257 through 384:
1100 0011 1111 0000 0011 0011 1111 1100 0011 0011 0000 0011 1100 0000 0011 0000
0000 1110 1101 0001 0001 1110 1110 0101 0010 0101 0010 0101 1110 1110 0010 1110

Bits 385 through 512:
0010 1110 1110 0010 0010 1110 1110 1110 1110 1110 0010 0010 0010 1110 1110 0010
1110 1110 1110 0010 1110 0010 1110 0010 0010 0010 0010 1110 0010 0010 1110 0010

Bits 513 through 640:

0010 0010 1110 1110 1110 1110 1110 1110 0010 1110 0010 1110 0010 1110 1110 0010
0010 1110 1110 0010 1110 1110 1110 0010 1110 1110 0010 1110 0010 0010 1110 0010

Bits 641 through 768:
0010 1110 1110 1110 0010 0010 0010 1110 0010 1110 1110 1110 1110 0010 0010 1110
0010 1110 0010 0010 0010 1110 1110 0010 0010 0010 0010 1110 0010 0010 0010 0010

Bits 769 through 896:
0010 1110 1110 1110 1110 1110 1110 0010 1110 0010 1110 0010 1110 1110 0010 0010
1110 1110 0010 1110 1110 1110 0010 1110 1110 0010 1110 0010 0010 1110 0010 0010

Bits 897 through 1024:
1110 1110 1110 0010 0010 0010 1110 0010 1110 1110 1110 1110 0010 0010 1110 0010
1110 0010 0010 0010 1110 1110 0010 0010 0010 0010 1110 0010 0010 0010 0010 1110

E.3 Example Burst Profiles

Table E-1. Example Channel Burst Parameter Values for QPSK Operation at 160, 320, and 640 ksym/sec

Parameter	Config. Settings	#1	#2	#3	#4	#5
Modulation	QPSK, 16QAM	QPSK	QPSK	QPSK	QPSK	QPSK
Diff Enc	On/Off	Off	Off	Off	Off	Off
Symbol Rate	5 configuration settings	160, 320 or 640 ksym/sec	160, 320 or 640 ksym/sec	160, 320 or 640 ksym/sec	160, 320 or 640 ksym/sec	160, 320 or 640 ksym/sec
Preamble Length	0, 4-1024 bits	56 bits	64 bits	64 bits	64 bits	64 bits
Preamble Start Location	1024 configuration settings	15	7	7	7	7
Preamble Values	1024 programmable bits	***	***	***	***	***
FEC On/Off	On/Off	Off	On	On	On	On
FEC Codeword Information Bytes (k)	1 to 255	N/A	32	56	64	220
FEC Error Correction (T bytes)	0 to 10	N/A	4	7	8	10
Last Codeword Length	Fixed or Shortened	N/A	Fixed	Fixed	Fixed	Fixed
Scrambler On/Off	On/Off	On	On	On	On	On
Scrambler Seed	15 bits**	default	default	default	default	default
Burst Length m mini-slots*	0 to 255	3	0	0	0	0

*A burst length of 0 mini-slots in the Channel Profile means that the burst length is variable on that channel for that burst type.
**15 bits in a 16-bit field

***Refer to Section E.2.

Table E-2. Example Channel Burst Parameter Values for QPSK Operation at 1.28 and 2.56 Msym/sec.

Parameter	Config. Settings	#1	#2	#3	#4	#5
Modulation	QPSK, 16QAM	QPSK	QPSK	QPSK	QPSK	QPSK
Diff Enc	On/Off	Off	Off	Off	Off	Off
Symbol Rate	5 configuration settings	1.28 or 2.56 Msym/s	1.28 or 2.56 Msym/s	1.28 or 2.56 Msym/s	1.28 or 2.56 Msym/s	1.28 or 2.56 Msym/s
Preamble Length	0, 4-1024 bits	48 bits	96 bits	96 bits	96 bits	96 bits
Preamble Start Location	1024 configuration settings	19	125	125	125	125
Preamble Values	1024 programmable bits	***	***	***	***	***
FEC On/Off	On/Off	Off	On	On	On	On
FEC Codeword Information Bytes (k)	1 to 255	N/A	40	56	64	220
FEC Error Correction (T bytes)	0 to 10	N/A	4	4	4	10
Last Codeword Length	Fixed or Shortened	N/A	Fixed	Fixed	Fixed	Fixed
Scrambler On/Off	On/Off	On	On	On	On	On
Scrambler Seed	15 bits**	default	default	default	default	default
Burst Length m mini-slots*	0 to 255	4	0	0	0	0

*A burst length of 0 mini-slots in the Channel Profile means that the burst length is variable on that channel for that burst type.
**15 bits in a 16-bit field
***Refer to Section E.2.

Table E-3. Example Channel Burst Parameter Values for 16QAM Operation at 160, 320, and 640 ksym/sec

Parameter	Config. Settings	#1	#2	#3	#4	#5
Modulation	QPSK, 16QAM	16QAM	16QAM	16QAM	16QAM	16QAM
Diff Enc	On/Off	Off	Off	Off	Off	Off
Symbol Rate	5 configuration settings	160, 320 or 640 ksym/sec	160, 320 or 640 ksym/sec	160, 320 or 640 ksym/sec	160, 320 or 640 ksym/sec	160, 320 or 640 ksym/sec
Preamble Length	0, 4-1024 bits	80 bits	128 bits	128 bits	128 bits	128 bits
Preamble Start Location	1024 configuration settings	429	385	385	385	385
Preamble Values	1024 programmable bits	***	***	***	***	***
FEC On/Off	On/Off	Off	On	On	On	On
FEC Codeword Information Bytes (k)	1 to 255	N/A	32	56	64	220
FEC Error Correction (T bytes)	0 to 10	N/A	4	7	8	10
Last Codeword Length	Fixed or Shortened	N/A	Fixed	Fixed	Fixed	Fixed
Scrambler On/Off	On/Off	On	On	On	On	On
Scrambler Seed	15 bits**	default	default	default	default	default
Burst Length m mini-slots*	0 to 255	2	0	0	0	0

*A burst length of 0 mini-slots in the Channel Profile means that the burst length is variable on that channel for that burst type.
**15 bits in a 16-bit field
***Refer to section E.2.

Table E-4. Example Channel Burst Parameter Values for 16QAM Operation at 1.28 and 2.56 Msym/sec

Parameter	Config. Settings	#1	#2	#3	#4	#5
Modulation	QPSK, 16QAM	16QAM	16QAM	16QAM	16QAM	16QAM
Diff Enc	On/Off	Off	Off	Off	Off	Off
Symbol Rate	5 configuration settings	1.28 or 2.56 Msym/s	1.28 or 2.56 Msym/s	1.28 or 2.56 Msym/s	1.28 or 2.56 Msym/s	1.28 or 2.56 Msym/s
Preamble Length	0, 4-1024 bits	144 bits	192 bits	192 bits	192 bits	192 bits
Preamble Start Location	1024 configuration settings	709	621	621	621	621
Preamble Values	1024 programmable bits	***	***	***	***	***
FEC On/Off	On/Off	Off	On	On	On	On
FEC Codeword Information Bytes (k)	1 to 255	N/A	40	56	64	220
FEC Error Correction (T bytes)	0 to 10	N/A	4	4	4	10
Last Codeword Length	Fixed or Shortened	N/A	Fixed	Fixed	Fixed	Fixed
Scrambler On/Off	On/Off	On	On	On	On	On
Scrambler Seed	15 bits**	default	default	default	default	default
Burst Length m mini-slots*	0 to 255	4	0	0	0	0

*A burst length of 0 mini-slots in the Channel Profile means that the burst length is variable on that channel for that burst type.
**15 bits in a 16-bit field
***Refer to section E.2.

Table E-5. Example Channel Burst Parameter Values for Power-Up and Acquisition in a New Channel

Parameter	Config. Settings	#1	#2	#3	#4
Modulation	QPSK, 16QAM	QPSK	QPSK	16QAM	16QAM
Diff Enc	On/Off	Off	Off	Off	Off
Symbol Rate	5 configuration settings	160, 320 or 640 ksym/sec	1.28 or 2.56 Msym/s	160, 320 or 640 ksym/sec	1.28 or 2.56 Msym/s
Preamble Length	0, 4-1024 bits	1024 bits	1024 bits	1024 bits	1024 bits
Preamble Start Location	1024 configuration settings	1	1	1	1
Preamble Values	1024 programmable bits	***	***	***	***
FEC On/Off	On/Off	On	On	On	On
FEC Codeword Information Bytes (k)	1 to 255	60	60	60	60
FEC Error Correction (T bytes)	0 to 10	10	10	10	10
Last Codeword Length	Fixed or Shortened	Fixed	Fixed	Fixed	Fixed
Scrambler On/Off	On/Off	On	On	On	On
Scrambler Seed	15 bits**	default	default	default	default
Burst Length m mini-slots*	0 to 255	42	53	21	27

*A burst length of 0 mini-slots in the Channel Profile means that the burst length is variable on that channel for that burst type.
**15 bits in a 16-bit field
***Refer to section E.2.

Table E-6. Frame Format Examples with QPSK Operation

Parameter	160 ksym/sec	320 ksym/sec	640 ksym/sec	1.28 Msym/sec	2.56 Msym/sec
Request Burst --					
spacing symbols (bytes) i.e., (guard time symbols - 1)	8 (2)	8 (2)	8 (2)	16 (4)	16 (4)
data symbols (bytes)	24 (6)	24 (6)	24 (6)	24 (6)	24 (6)
preamble symbols (bytes)	28 (7)	28 (7)	28 (7)	24 (6)	24 (6)
total symbols (bytes)	60 (15)	60 (15)	60 (15)	64 (16)	64 (16)
total burst duration (mini-slots)	3	3	3	4	4
total burst duration (microseconds)	375	187.5	93.75	50	25
information rate (6 bytes per burst)	128 kb/s	256 kb/s	512 kb/s	960 kb/s	1.92 Mb/s
Communication Burst --					
codewords/burst	1*	1*	1*	1*	1*
errors corrected per code-word	4	4	4	4	4
spacing symbols (bytes) i.e., (guard time symbols - 1)	8 (2)	8 (2)	8 (2)	16 (4)	16 (4)
data symbols (bytes)	128 (32)	128 (32)	128 (32)	160 (40)	160 (40)
parity symbols (bytes)	32 (8)	32 (8)	32 (8)	32 (8)	32 (8)
preamble symbols (bytes)	32 (8)	32 (8)	32 (8)	48 (12)	48 (12)
total symbols (bytes)	200 (50)	200 (50)	200 (50)	256 (64)	256 (64)
total burst duration (mini-slots)	2+8=10	2+8=10	2+8=10	4+12=16	4+12=16
total burst duration (microseconds)	1250	625	312.5	200	100
information rate (excluding MAC Header)	166.4 kb/sec	332.8 kb/sec	665.6 kb/sec	1.360 Mb/sec	2.720 Mb/sec

*The numbers in the table are given for a single codeword, but more codewords can be added, with the same data and parity lengths as given in the table, to create longer bursts.

Table E-6. (continued) Frame Format Examples with QPSK Operation

Parameter	160 ksym/sec	320 ksym/sec	640 ksym/sec	1.28 Msym/sec	2.56 Msym/sec
Communication Burst --					
codewords/burst	1*	1*	1*	1*	1*
errors corrected per code-word	8	8	8	4	4
spacing symbols (bytes) i.e., (guard time symbols - 1)	8 (2)	8 (2)	8 (2)	16 (4)	16 (4)
data symbols (bytes)	256 (64)	256 (64)	256 (64)	256 (64)	256 (64)
parity symbols (bytes)	64 (16)	64 (16)	64 (16)	32 (8)	32 (8)
preamble symbols (bytes)	32 (8)	32 (8)	32 (8)	48 (12)	48 (12)
total symbols (bytes)	360 (90)	360 (90)	360 (90)	352 (88)	352 (88)
total burst duration (mini-slots)	2+16=18	2+16=18	2+16=18	4+18=22	4+18=22
total burst duration (microseconds)	2250	1125	562.5	275	137.5
information rate (excluding MAC Header)	206.2 kb/sec	412.4 kb/sec	824.9 kb/sec	1.687 Mb/sec	3.375 Mb/sec
Communication Burst --					
codewords/burst	1*	1*	1*	1*	1*
errors corrected per code-word	10	10	10	10	10
spacing symbols (bytes) i.e., (guard time symbols - 1)	8 (2)	8 (2)	8 (2)	16 (4)	16 (4)
data symbols (bytes)	880 (220)	880 (220)	880 (220)	880 (220)	880 (220)
parity symbols (bytes)	80 (20)	80 (20)	80 (20)	80 (20)	80 (20)
preamble symbols (bytes)	32 (8)	32 (8)	32 (8)	48 (12)	48 (12)
total symbols (bytes)	1000 (250)	1000 (250)	1000 (250)	1024 (256)	1024 (256)
total burst duration (mini-slots)	2+48=50	2+48=50	2+48=50	4+60=64	4+60=64
total burst duration (microseconds)	6250	3125	1562.5	800	400
information rate (excluding MAC Header)	273.9 kb/sec	547.8 kb/sec	1.096 Mb/sec	2.140 Mb/sec	4.280 Mb/sec

*The numbers in the table are given for a single codeword, but more codewords can be added, with the same data and parity lengths as given in the table, to create longer bursts.

Table E-6. (continued) Frame Format Examples with QPSK Operation

Parameter	160 ksym/sec	320 ksym/sec	640 ksym/sec	1.28 Msym/sec	2.56 Msym/sec
Communication Burst --					
codewords/burst	4*	4*	4*	4*	4*
errors corrected per code-word	8	8	8	4	4
spacing symbols (bytes) i.e., (guard time symbols - 1)	8 (2)	8 (2)	8 (2)	16 (4)	16 (4)
data symbols (bytes)	1024 (256)	1024 (256)	1024 (256)	1024 (256)	1024 (256)
parity symbols (bytes)	256 (64)	256 (64)	256 (64)	128 (32)	128 (32)
preamble symbols (bytes)	32 (8)	32 (8)	32 (8)	48 (12)	48 (12)
total symbols (bytes)	1320 (330)	1320 (330)	1320 (330)	1216 (304)	1216 (304)
total burst duration (mini-slots)	2+16*4=66	2+16*4=66	2+16*4=66	4+18*4=76	4+18*4=76
total burst duration (microseconds)	8250	4125	2062.5	950	475
information rate (excluding MAC Header)	242.4 kb/sec	484.8 kb/sec	969.7 kb/sec	2.105 Mb/sec	4.211 Mb/sec
Communication Burst --					
codewords/burst	4*	4*	4*	4*	1*
errors corrected per code-word	10	10	10	10	10
spacing symbols (bytes) i.e., (guard time symbols - 1)	8 (2)	8 (2)	8 (2)	16 (4)	16 (4)
data symbols (bytes)	3520 (880)	3520 (880)	3520 (880)	3520 (880)	3520 (880)
parity symbols (bytes)	320 (80)	320 (80)	320 (80)	320 (80)	320 (80)
preamble symbols (bytes)	32 (8)	32 (8)	32 (8)	48 (12)	48 (12)
total symbols (bytes)	3880 (970)	3880 (970)	3880 (970)	3904 (976)	3904 (976)
total burst duration (mini-slots)	2+48*4=194	2+48*4=194	2+48*4=194	4+60*4=244	4+60*4=244
total burst duration (microseconds)	24,250	12,125	6062.5	3050	1525
information rate (excluding MAC Header)	288.3 kb/sec	576.7 kb/sec	1.153 Mb/sec	2.292 Mb/sec	4.585 Mb/sec

*The numbers in the table are given for four codewords per burst, but more or fewer codewords can be used, with the same data and parity lengths as given in the table.

Table E-7. Frame Format Examples with 16QAM Operation.

Parameter	160 ksym/sec	320 ksym/sec	640 ksym/sec	1.28 Msym/sec	2.56 Msym/sec
Request Burst --					
spacing symbols (bytes) i.e., (guard time symbols - 1)	8 (4)	8 (4)	8 (4)	16 (8)	16 (8)
data symbols (bytes)	12 (6)	12 (6)	12 (6)	12 (6)	12 (6)
preamble symbols (bytes)	20 (10)	20 (10)	20 (10)	36 (18)	36 (18)
total symbols (bytes)	40 (20)	40 (20)	40 (20)	64 (32)	64 (32)
total burst duration (mini-slots)	2	2	2	4	4
total burst duration (microseconds)	250	125	62.5	50	25
information rate (6 bytes per burst)	192 kb/sec	384 kb/sec	768 kb/sec	960 kb/sec	1.920 Mb/sec
Communication Burst --					
codewords/burst	1*	1*	1*	1*	1*
errors corrected per code-word	4	4	4	4	4
spacing symbols (bytes) i.e., (guard time symbols - 1)	8 (4)	8 (4)	8 (4)	16 (8)	16 (8)
data symbols (bytes)	64 (32)	64 (32)	64 (32)	80 (40)	80 (40)
parity symbols (bytes)	16 (8)	16 (8)	16 (8)	16 (8)	16 (8)
preamble symbols (bytes)	32 (16)	32 (16)	32 (16)	48 (24)	48 (24)
total symbols (bytes)	120 (60)	120 (60)	120 (60)	160 (80)	160 (80)
total burst duration (mini-slots)	2+4=6	2+4=6	2+4=6	4+6=10	4+6=10
total burst duration (microseconds)	750	375	187.5	125	62.5
information rate (excluding MAC Header)	277.3 kb/sec	554.7 kb/sec	1.109 Mb/sec	2.176 Mb/sec	4.352 Mb/sec

*The numbers in the table are given for a single codeword, but more codewords can be added, with the same data and parity lengths as given in the table, to create longer bursts.

Table E-7. Frame Format Examples with 16QAM Operation (continued)

Parameter	160 ksym/sec	320 ksym/sec	640 ksym/sec	1.28 Msym/sec	2.56 Msym/sec
Communication Burst --					
codewords/burst	1*	1*	1*	1*	1*
errors corrected per code-word	7	7	7	4	4
spacing symbols (bytes) i.e., (guard time symbols - 1)	8 (4)	8 (4)	8 (4)	16 (8)	16 (8)
data symbols (bytes)	128 (64)	128 (64)	128 (64)	128 (64)	128 (64)
parity symbols (bytes)	32 (16)	32 (16)	32 (16)	16 (8)	16 (8)
preamble symbols (bytes)	32 (16)	32 (16)	32 (16)	48 (24)	48 (24)
total symbols (bytes)	200 (100)	200 (100)	200 (100)	208 (104)	208 (104)
total burst duration (mini-slots)	2+8=10	2+8=10	2+8=10	4+9=13	4+9=13
total burst duration (microseconds)	1250	625	312.5	162.5	81.25
information rate (excluding MAC Header)	371.2 kb/sec	742.4 kb/sec	1.455 Mb/sec	2.855 Mb/sec	5.711 Mb/sec
Communication Burst --					
codewords/burst	1*	1*	1*	1*	1*
errors corrected per code-word	10	10	10	10	10
spacing symbols (bytes) i.e., (guard time symbols - 1)	8 (4)	8 (4)	8 (4)	16 (8)	16 (8)
data symbols (bytes)	440 (220)	440 (220)	440 (220)	440 (220)	440 (220)
parity symbols (bytes)	40 (20)	40 (20)	40 (20)	40 (20)	40 (20)
preamble symbols (bytes)	32 (16)	32 (16)	32 (16)	48 (24)	48 (24)
total symbols (bytes)	520 (260)	520 (260)	520 (260)	544 (272)	544 (272)
total burst duration (mini-slots)	2+24=26	2+24=26	2+24=26	4+30=34	4+30=34
total burst duration (microseconds)	3250	1625	812.5	425	212.5
information rate (excluding MAC Header)	526.8 kb/sec	1.054 Mb/sec	2.107 Mb/sec	4.028 Mb/sec	8.056 Mb/sec

*The numbers in the table are given for a single codeword, but more codewords can be added, with the same data and parity lengths as given in the table, to create longer bursts.

Table E-7. (continued) Frame Format Examples with 16QAM Operation

Parameter	160 ksym/sec	320 ksym/sec	640 ksym/sec	1.28 Msym/sec	2.56 Msym/sec
Communication Burst --					
codewords/burst	4*	4*	4*	4*	4*
errors corrected per code-word	7	7	7	4	4
spacing symbols (bytes) i.e., (guard time symbols - 1)	8 (4)	8 (4)	8 (4)	16 (8)	16 (8)
data symbols (bytes)	512 (256)	512 (256)	512 (256)	512 (256)	512 (256)
parity symbols (bytes)	128 (64)	128 (64)	128 (64)	64 (32)	64 (32)
preamble symbols (bytes)	32 (16)	32 (16)	32 (16)	48 (24)	48 (24)
total symbols (bytes)	680 (340)	680 (340)	680 (340)	640 (320)	640 (320)
total burst duration (mini-slots)	2+8*4=34	2+8*4=34	2+8*4=34	4+9*4=40	4+9*4=40
total burst duration (microseconds)	4250	2125	1062.5	500	250
information rate (excluding MAC Header)	470.6 kb/sec	941.2 kb/sec	1.882 Mb/sec	4.000 Mb/sec	8.000 Mb/sec
Communication Burst --					
codewords/burst	4*	4*	4*	4*	4*
errors corrected per code-word	10	10	10	10	10
spacing symbols (bytes) i.e., (guard time symbols - 1)	8 (4)	8 (4)	8 (4)	16 (8)	16 (8)
data symbols (bytes)	1760 (880)	1760 (880)	1760 (880)	1760 (880)	1760 (880)
parity symbols (bytes)	160 (80)	160 (80)	160 (80)	160 (80)	160 (80)
preamble symbols (bytes)	32 (16)	32 (16)	32 (16)	48 (24)	48 (24)
total symbols (bytes)	1960 (980)	1960 (980)	1960 (980)	1984 (992)	1984 (992)
total burst duration (mini-slots)	2+24*4=98	2+24*4=98	2+24*4=98	4+30*4=124	4+30*4=124
total burst duration (microseconds)	12,250	6125	3062.5	1550	775
information rate (excluding MAC Header)	570.8 kb/sec	1.142 Mb/sec	2.283 Mb/sec	4.511 Mb/sec	9.022 Mb/sec

*The numbers in the table are given for four codewords per burst, but more or fewer codewords can be used, with the same data and parity lengths as given in the table.

This page intentionally left blank.

Appendix F - Upstream Modulation Rates

F.1 Introduction

The sources of ingress are not randomly distributed throughout the upstream cable network spectrum, but are grouped in frequency bands accordance with the International Radio Regulations, which is an international treaty subscribed to by most countries of the world. In some bands, higher powers are used, so ingress is more likely to be found there. The pattern of allocations can be readily recognized by examination of the upstream cable network band with a spectrum analyzer.

The upstream modulation rates and flexibility in selecting upstream carrier frequencies defined in this document permit operators to position carriers in those portions of the upstream cable network spectrum which are less prone to narrowband ingress.

F.2 Sources of Narrowband Ingress

Radio transmitters in the high-frequency (HF) portion of the radio spectrum (3 to 30 MHz) are the major sources of narrowband ingress. The transmitters that can affect upstream cable network paths may be local, domestic or in other countries.

F.2.1 HF Propagation

HF propagation is largely influenced by bending of radio waves in the ionosphere, which is a region between about 60 and 200 miles above the earth, so propagation distances can be very large. The bending is caused by ionization of free electrons by ultra-violet rays from the sun. There are several reflecting layers at various heights with differing characteristics, so the maximum usable frequency and distance reached depend on the time of day and solar activity.

Diurnal Variation - During local daytime, the higher frequencies are propagated over long distances and the lower frequencies are absorbed. During local night-time, the lower frequencies are propagated over distances which are not quite so large, and the higher frequencies experience diminished or no propagation.

Solar Cycle - Ionization is at its greatest during the peak of the 11-year sunspot cycle. At the largest sunspot peaks, strong distant signals can be heard across the HF band at most times of the day. At sunspot minima, long-distance propagation can be rare above about 15 MHz. Note that the cycle is currently at a minimum, so ingress is likely to affect cable systems on an increasing basis and at higher frequencies over the next 5 to 6 years.

F.2.2 Users of the HF Radio Spectrum

The main users of the HF radio spectrum are

- Broadcasting
- Maritime mobile
- Aeronautical mobile
- Aeronautical navigation
- Fixed (i.e., point-to-point)
- Standard frequency and time signals
- Amateur

- Citizens Band (CB).

The service of greatest concern for ingress is the Broadcasting Service. The Amateur and Citizens Band services are also of concern.

F.2.3 Broadcasting

The main ingress signals seen on typical cable networks are short-wave Broadcasting signals. The Broadcasting service is designed to provide very high field strengths in target markets so that the public can receive clear signals with simple receivers. Thus the service generally has these characteristics:

- Amplitude-modulated signals
- Very high transmitter powers
- High-gain, directive antenna arrays
- Simultaneous transmission on multiple frequencies in different parts of the HF spectrum, to combat HF propagation variability.
- Very large field strengths over a wide geographic area, affecting entire cable systems.

The frequencies allocated to the Broadcasting Service on a world-wide basis are shown in Table F-1.

Table F-1. Broadcasting Allocations Between 5 and 42 MHz

Frequency, kHz	
From	**To**
5,950	6,200
7,100	7,300
9,500	9,900
11,650	12,050
13,600	13,800
15,100	15,600
17,550	17,900
21,450	21,850
25,670	26,100

***Note**:* Although 7,100-7,300 kHz is not allocated to Broadcasting in ITU Region 2 (the Americas), strong signals reach the USA and Canada from the other ITU Regions.

F.2.4 Amateur and CB

The Amateur Service is of concern, but for different reasons. Amateur transmitters operate at far lower powers than the Broadcasting Service, but are located in residential neighborhoods close to the cable plant, so they can represent potential localized sources of ingress in different bands across the HF spectrum. Radiation from the upstream cable plant may also cause interference into amateur receivers.

The Citizens Band Service operates at powers which are very much lower and are less likely to be sources of ingress. However, CB receivers may be capable of picking up interference from cable plant radiation.
The allocations in the USA and Canada for the Amateur and Citizens Band Services between 5 and 42 MHz are in Table F-2.

Table F-2. Amateur and Citizens Band Allocations Between 5 and 42 MHz

Frequency, kHz	
From	**To**
7,000	7,300
10,100	10,150
14,000	14,350
18,068	18,168
21,000	21,450
24,890	24,990
26,960	27,240
28,000	29,700

F.2.5 Other Services

The other services in the HF spectrum operate at powers which are lower than Broadcasting, and are usually not located in residential areas, so they are less likely to be of concern. In the low VHF region between 30 and 42 MHz, there may be a localized effect from high-power paging in the vicinity of 35 MHz.

F.3 Fitting Data Carriers Within the Ingress Gaps

The range of modulation rates and the flexibility in setting upstream carrier frequencies defined in this document permit operators to fit data-over-cable carriers in the gaps between the short-wave Broadcasting bands, to avoid this significant source of ingress. They also permit operators to avoid the Amateur and Citizens Band bands as well.
Table F-3 illustrates the quantity of data carriers that can be derived in the gaps between the Broadcasting allocations at the channel widths specified in this document, and the resulting utilization of the available spectrum. Table F-4 shows a similar illustration for the gaps between the Broadcasting, Amateur and CB allocations. A conservative upper limit of 40 MHz is used.

Table F-3. Data Carriers in the Gaps Between Broadcasting Bands

Non-Broadcast Spectrum, kHz			Data Carrier Width, kHz				
			200	**400**	**800**	**1,600**	**3,200**
From	To	Gap	Data Carriers Available				
5,000	5,950	950	4	2	1	0	0
6,200	7,100	900	4	2	1	0	0
7,300	9,500	2,200	11	5	2	1	0
9,900	11,650	1,750	8	4	2	1	0
12,050	13,600	1,550	7	3	1	0	0
13,800	15,100	1,300	6	3	1	0	0
15,600	17,550	1,950	9	4	2	1	0
17,900	21,450	3,550	17	8	4	2	1
21,850	25,670	3,820	19	9	4	2	1
26,100	40,000	13,900	69	34	17	8	4
Least Gap, kHz		900					
Total Carriers			154	74	35	15	6
Total Bandwidth, kHz		31,870	30,800	29,600	28,000	24,000	19,200
Utilization, %			97	93	88	75	60

Table F-4. Data Carriers in the Gaps Between Broadcasting, Amateur and CB Bands

Spectrum Other than Broadcast, Amateur, CB, kHz			Data Carrier Width, kHz				
			200	400	800	1,600	3,200
From	**To**	**Gap**	**Data Carriers Available**				
5,000	5,950	950	4	2	1	0	0
6,200	7,000	800	4	2	1	0	0
7,300	9,500	2,200	11	5	2	1	0
9,900	10,100	200	1	0	0	0	0
10,150	11,650	1,500	7	3	1	0	0
12,050	13,600	1,550	7	3	1	0	0
13,800	14,000	200	1	0	0	0	0
14,350	15,100	750	3	1	0	0	0
15,600	17,550	1,950	9	4	2	1	0
17,900	18,068	168	0	0	0	0	0
18,168	21,000	2,832	14	7	3	1	0
21,850	24,890	3,040	15	7	3	1	0
24,990	25,670	680	3	1	0	0	0
26,100	26,960	860	4	2	1	0	0
27,410	28,000	590	2	1	0	0	0
29,700	40,000	10,300	51	25	12	6	3
Least Gap, kHz		168					
Total Carriers			136	63	27	10	3
Total Bandwidth, kHz		28,570	27,200	25,200	21,600	16,000	9,600
Utilization, %			95	88	76	56	34

This page intentionally left blank.

Appendix G - Example: Multiple Upstream Channels

This appendix presents an example of several upstream channels served by a single downstream channel. This is meant to illustrate one topology and one implementation of that topology.

Suppose one downstream channel is used in conjunction with four upstream channels as shown in Figure

G-1. In this case, the four upstream channels are separate fibers serving four geographical communities of modems.

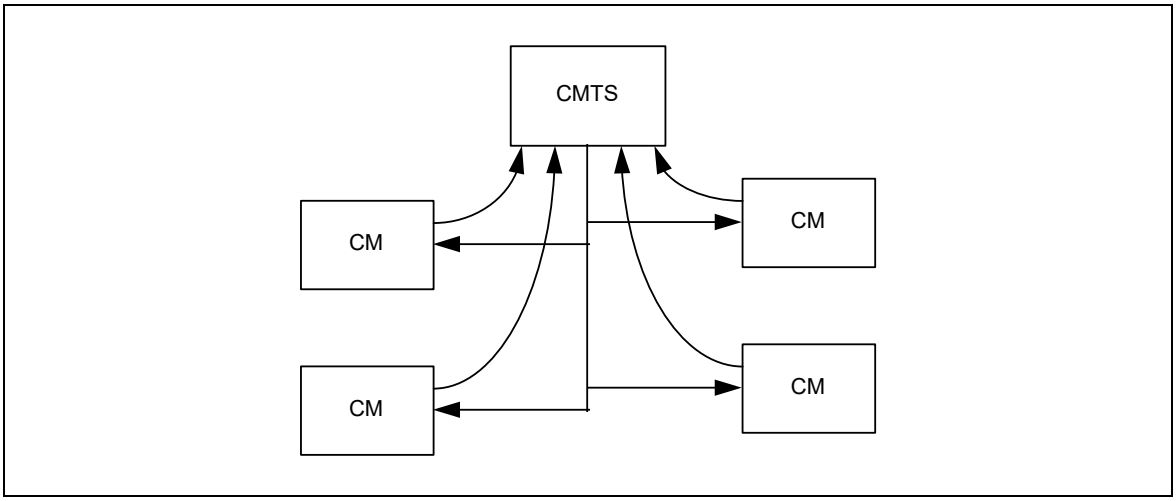

Figure G-1. One Downstream and 4 Upstream Channels

In this topology, the CMTS transmits four Upstream Channel Descriptors (UCDs) and four MAPs. Unfortunately, each CM cannot determine to which upstream channel it is attached, because there is no way to convey the geographical information on the shared downstream channel. The CM must assume (at least at initialization) that the UCD and MAP apply to the channel to which it is attached. The CM chooses an Initial Maintenance opportunity on any of the channels and transmits a Ranging Request. The CMTS will receive the request and will redirect the CM to the appropriate upstream channel identifier. From then on, the CM will be using the MAP that is appropriate to the fiber branch to which it is connected.

A number of constraints are imposed by this topology:

- All of the upstream channels must operate at the same frequency. Since the CM is choosing a channel descriptor at random, it would be transmitting on the wrong frequency if it chose the UCD that applied to a different fiber path.
- All of the upstream channels must operate at the same symbol rate. If not, the CMTS would be unable to demodulate the Ranging Request if transmitted at the wrong symbol rate for the particular channel.
- All Initial Maintenance opportunities across all fiber branches must be aligned. When the CM randomly chooses a MAP to use, the CMTS must be prepared to receive a Ranging Request at that time.

- All Initial Maintenance opportunities must use the same burst characteristics so that the CMTS can demodulate the Ranging Request.

Note that only the initialization intervals must be aligned. Once the CM is assigned its proper channel ID, its activities need only be aligned with other users of its fiber branch. Ordinary data transmission and requests for bandwidth may occur independently across the four upstream channels.

Appendix H - References

[CableLabs1] Two-Way Cable Television System Characterization, Cable Television Laboratories, Inc., April 12, 1995.

[CableLabs2] Digital Transmission Characterization of Cable Television Systems, Cable Television Laboratories, Inc., November, 1994.

[DIX] Ethernet Protocol Version 2.0, Digital, Intel, Xerox, 1982.

[IEEE802] IEEE Std 802-1990, Local and Metropolitan Area Networks: Overview and Architecture.

[IEEE802.1Q] IEEE Draft Standard 802.1Q/D4. Draft Standard for Virtual Bridged Local Area Networks. December 20, 1996.

[IPS-SP-401] F-Connector Specification, Society of Cable Television Engineers

[IS-6] EIA Interim Standard IS-6 (1983) - Recommended Cable TV Channel Identification Plan.

[ISO8025] ISO 8025 (December 1987) -- Information processing systems - Open Systems Interconnection - Specification of the Basic Encoding Rules for Abstract Syntax Notation One (ASN.1).

[ISO8802-2] ISO/IEC 8802-2: 1994 (IEEE Std 802.2: 1994) - Information technology - Telecommunications and information exchange between systems - Local and metropolitan area networks - Specific requirements - Part 2: Logical link control

[ISO8802-3] ISO/IEC 8802-3: 1996 (IEEE Std 802.3: 1996) - Information technology - Telecommunications and information exchange between systems - Local and metropolitan area networks - Part 3: Carrier sense multiple access with collision detection (CSMA/CD) access method and physical sublayer specifications

[ISO/IEC10038] ISO/IEC 10038 (ANSI/IEEE Std 802.1D): 1993, Information technology - Telecommunications and information exchange between systems - Local area networks - Media access control (MAC) bridges.

[ISO/IEC10039] ISO/IEC 10039:1991 Information technology – Open Systems Interconnection –Local area networks –Medium Access Control (MAC) service definition.

[ISO/IEC15802-1] ISO/IEC 10039:1991 Information technology – Telecommunications and information exchange between systems – Local and metropolitan area networks – Common specifications – Part 1: Medium Access Control (MAC) service definition.

[ITU-T H.222.0] ITU-T Recommendation H.222.0 (1995) | ISO/IEC 13818-1:1996, Information technology -- generic coding of moving pictures and associated audio information systems.

[ITU-T J.83-B]	Appendix B to ITU-T Recommendation J.83 (10/95), Digital multi-programme systems for television sound and data services for cable distribution.
[ITU-T X.25]	ITU-T Recommendation X.25(03/93), Interface between data terminal equipment and data circuit-terminating equipment for terminals operating in the packet mode and connected to public data networks by dedicated circuit.
[ITU-T Z.100]	ITU-T Recommendation Z.100 (3/93) - CCITT Specification and description language (SDL)
[MCNS1]	MCNS Data Over Cable Service Interface Specification Request for Proposals, December 11, 1995 (can be downloaded on the World Wide Web from http://www.cablemodem.com/).
[MCNS2]	MCNS Data Over Cable Security Specification SP-DOCSS (in preparation).
[MCNS3]	MCNS Cable Modem Termination System - Network-Side Interface Specification SP-CMTS-NSID04-960409 (CMTS-NSI), April 9, 1996
[MCNS4]	MCNS Cable Modem to Customer PremisesEquipment Interface Specification SP-CMCID04-960409 (CMCI), April 9, 1996
[MCNS5]	MCNS Data Over Cable System Operations Support System Interfaces SP-OSSI (in preparation).
[MCNS6]	MCNS Cable Modem Telephone Return Interface Specification SP-CMTRI (in preparation).
[MCNS7]	MCNS Cable Modem Removable Security Module SP-RSM (in preparation).
[MCNS8]	Baseline Data-Over-Cable Security Specification SP-BDS (in preparation).
[NCTA]	NCTA Recommended Practices for measurement on Cable Television Systems - National Cable Television Association, Washington DC, 2nd Edition, revised October, 1993.
[RFC-791]	Postel, J., Internet Protocol, IETF RFC-791 (MIL STD 1777), September, 1981
[RFC-826]	Plummer, D., Ethernet Address Resolution Protocol: Or converting network protocol addresses to 48-bit Ethernet address for transmission on Ethernet hardware, November, 1982.
[RFC-868]	Harrenstien, K., and Postel, J., Time Protocol, IETF RFC-868, May 1983
[RFC-1042]	Postel, J., and Reynolds, J., A Standard for the Transmission of IP Datagrams over IEEE 802 Networks, IETF RFC-1042, February, 1988
[RFC-1058]	Hedrick, C., Routing Information Protocol, IETF RFC-1058, June, 1988
[RFC-1157]	Schoffstall, M., Fedor, M., Davin, J. and Case, J., A Simple Network Management Protocol (SNMP), IETF RFC-1157, May, 1990

[RFC-1350] Sollings, K., The TFTP Protocol (Revision 2), IETF RFC-1350, July, 1992

[RFC-1533] Alexander, S., and Droms, R., DHCP Options and BOOTP Vendor Extensions, IETF RFC-1533, October, 1993

[RFC-1541] Droms, R., Dynamic Host Configuration Protocol, IETF RFC-1541, October, 1993.

[RFC-1633] Braden, R., Clark, D., and Shenker, S., Integrated Services in the Internet
Architecture: An Overview, IETF RFC-1633, June, 1994.

[RFC-1812] Baker, F., Requirements for IP Version 4 Routers, IETF RFC-1812. June, 1995.

[RFC-2104] Krawczyk, H., Bellare, M., and Canetti, R., HMAC: Keyed-Hashing for
Message Authentication, IETF RFC-2104, February, 1997.

[SMS] The Spectrum Management Application (SMA) and the Common Spectrum Management Interface (csmi), Time Warner Cable, December 24, 1995.

This page intentionally left blank.

Appendix I - Glossary

Address Resolution Protocol (ARP) - A protocol of the IETF for converting network addresses to 48-bit Ethernet addresses.
American National Standards Institute (ANSI) - A US standards body.
ANSI - See American National Standards Institute.
ARP - See Address Resolution Protocol.
Asynchronous Transfer Mode (ATM) - A protocol for the transmission of a variety of digital signals using uniform 53-byte cells.
ATM - See Asynchronous Transfer Mode.
Availability - In cable television systems, availability is the long-term ratio of the actual RF channel operation time to scheduled RF channel operation time (expressed as a percent value) and is based on a bit error rate (BER) assumption.
BPDU - See Bridge Protocol Data Unit.
Bridge Protocol Data Unit (BDU)- Spanning tree protocol messages as defined in [ISO/IEC10038].
Broadcast Addresses - A predefined destination address that denotes the set of all data network service access points
Burst Error Second - Any Errored Second containing at least 100 errors.
Cable Modem (CM) - A modulator-demodulator at subscriber locations intended for use in conveying data communications on a cable television system.
Cable Modem Termination System (CMTS) - Cable modem termination system, located at the cable television system headend or distribution hub, which provides complementary functionality to the cable modems to enable data connectivity to a wide-area network.
Cable Modem Termination System - Network Side Interface (CMTS-NSI) - The interface, defined in [MCNS3], between a CMTS and the equipment on its network side.
Cable Modem to CPE Interface (CMCI) - The interface, defined in [MCNS4], between a CM and CPE.
Carrier Hum Modulation - The peak-to-peak magnitude of the amplitude distortion relative to the RF carrier signal level due to the fundamental and low-order harmonics of the power-supply frequency.
Carrier-to-Noise Ratio (C/N or CNR) - The square of the ratio of the root mean square (rms) of the voltage of the digitally-modulated RF carrier to the rms of the continuous random noise voltage in the defined measurement bandwidth. (If not specified explicitly, the measurement bandwidth is the symbol rate of the digital modulation; for video it is 4 MHz).
CM - See Cable Modem.
CMCI - See Cable Modem to CPE Interface.
CMTS - See Cable Modem Termination System.
CMTS-NSI - See Cable Modem Termination System - Network Side Interface
Composite Second Order Beat (CSO) - The peak of the average level of distortion products due to second-order non-linearities in cable system equipment.
Composite Triple Beat (CTB) - The peak of the average level of distortion components due to third-order non-linearities in cable system equipment.

CPE - See Customer Premises Equipment.
Cross-Modulation - A form of television signal distortion where modulation from one or more television channels is imposed on another channel or channels.
Customer - See End User.
Customer Premises Equipment (CPE) - Equipment at the end user's premises; MAY be provided by the end user or the service provider.
Data Link Layer - Layer 2 in the Open System Interconnection (OSI) architecture; the layer that provides services to transfer data over the transmission link between open systems.
DHCP - See Dynamic Host Configuration Protocol.
Distribution Hub - A location in a cable television network which performs the functions of a Headend for customers in its immediate area, and which receives some or all of its television program material from a Master Headend in the same metropolitan or regional area; see, for example, [MCNS1].
Downstream - In cable television, the direction of transmission from the headend to the subscriber.
Drop Cable - Coaxial cable that connects to a residence or service location from a directional coupler (tap) on the nearest coaxial feeder cable.
Dynamic Host Configuration Protocol (DHCP) - An Internet protocol used for assigning network-layer (IP) addresses.
Dynamic Range - The ratio between the greatest signal power that can be transmitted over a multichannel analog transmission system without exceeding distortion or other performance limits, and the least signal power that can be utilized without exceeding noise, error rate or other performance limits.
Electronic Industries Association (EIA) - A voluntary body of manufacturers which, among other activities, prepares and publishes standards.
End User - A human being, organization, or telecommunications system that accesses the network in order to communicate via the services provided by the network.
Errored Second - Any 1-sec interval containing at least one bit error.
Extended Subsplit - A frequency division scheme that allows bidirectional traffic on a single coaxial cable. Reverse path signals come to the headend from 5 to 42 MHz. Forward path signals go from the headend from 50 or 54 MHz to the upper frequency limit.
FDDI - See Fiber Distributed Data Interface.
Feeder Cable - Coaxial cables that run along streets within the served area and connect between the individual taps which serve the customer drops.
Fiber Distributed Data Interface (FDDI) --A fiber-based LAN standard.
Fiber Node - A point of interface between a fiber trunk and the coaxial distribution.
Forward Channel - The direction of RF signal flow away from the headend toward the end user; equivalent to Downstream.
Group Delay - The difference in transmission time between the highest and lowest of several frequencies through a device, circuit or system.
Guard Time - Minimum time allocated between bursts in the upstream referenced from the symbol center of the last symbol of a burst to the symbol center of the first symbol of the following burst. The guard time should be at least the duration of five symbols plus the maximum system timing error.

Harmonic Related Carrier (HRC) - A method of spacing television channels on a cable television system in exact 6-MHz increments, with all carrier frequencies harmonically related to a common reference.
Headend - The central location on the cable network that is responsible for injecting broadcast video and other signals in the downstream direction. See also Master Headend, Distribution Hub.
Header - Protocol control information located at the beginning of a protocol data unit.
HFC - See Hybrid Fiber/Coax (HFC) System.
High Frequency (HF) - Used in this document to refer to the entire subsplit (5-30 MHz) and extended subsplit (5-42 MHz) band used in reverse channel communications over the cable television network.
High Return - A frequency division scheme that allows bi-directional traffic on a single coaxial cable. Reverse channel signals propagate to the headend above the downstream passband.
Hum Modulation - Undesired modulation of the television visual carrier by the fundamental or low-order harmonics of the power supply frequency, or other low-frequency disturbances.
Hybrid Fiber/Coax (HFC) System - A broadband bidirectional shared-media transmission system using fiber trunks between the headend and the fiber nodes, and coaxial distribution from the fiber nodes to the customer locations.
ICMP - See Internet Control Message Protocol.
IEEE - See Institute of Electrical and Electronic Engineers.
IETF - See Internet Engineering Task Force.
Incremental Related Carriers (IRC) - A method of spacing NTSC television channels on a cable television system in which all channels except 5 and 6 correspond to the standard channel plan, used to reduce composite triple beat distortions.
Institute of Electrical and Electronic Engineers (IEEE) - A voluntary organization which, among other things, sponsors standards committees and is accredited by the American National Standards Institute.
International Electrotechnical Commission (IEC) - An international standards body.
International Organization for Standardization (ISO) - An international standards body, commonly known as the International Standards Organization.
Internet Control Message Protocol (ICMP) - An Internet network-layer protocol.
Internet Engineering Task Force (IETF) - A body responsible, among other things, for developing standards used in the Internet.
Impulse Noise - Noise characterized by non-overlapping transient disturbances.
Internet Protocol (IP) - An Internet network-layer protocol.
IP - See Internet Protocol.
Latency - The time, expressed in quantity of symbols, taken for a signal element to pass through a device.
Layer - A subdivision of the Open System Interconnection (OSI) architecture, constituted by subsystems of the same rank
LLC - See Logical Link Control (LLC) procedure.
Local Area Network (LAN) - A non-public data network in which serial transmission is used for direct data communication among data stations located on the user's premises.

Logical Link Control (LLC) procedure - In a local area network (LAN) or a Metropolitan Area Network (MAN), that part of the protocol that governs the assembling of data link layer frames and their exchange between data stations, independent of how the transmission medium is shared.
MAC - See Media Access Control (MAC) procedure.
MAC Service Access Point - See section 0.
Master Headend - A headend which collects television program material from various sources by satellite, microwave, fiber and other means, and distributes this material to Distribution Hubs in the same metropolitan or regional area. A Master Headend MAY also perform the functions of a Distribution Hub for customers in its own immediate area; see, for example, [MCNS1].
MCNS - See Multimedia Cable Network System (MCNS) partners.
Mean Time to Repair (MTTR) - In cable television systems, the MTTR is the average elapsed time from the moment a loss of RF channel operation is detected up to the moment the RF channel operation is fully restored.
Media Access Control (MAC) address - The “built-in” hardware address of a device connected to a shared medium.
Media Access Control (MAC) procedure - In a subnetwork, that part of the protocol that governs access to the transmission medium independent of the physical characteristics of the medium, but taking into account the topological aspects of the subnetworks, in order to enable the exchange of data between nodes. MAC procedures include framing, error protection, and acquiring the right to use the underlying transmission medium.
Media Access Control (MAC) sublayer - The part of the data link layer that supports topology-dependent functions and uses the services of the Physical Layer to provide services to the logical link control (LLC) sublayer.
Micro-reflections - Echoes in the forward transmission path due to departures from ideal amplitude and phase characteristics.
Mid Split - A frequency division scheme that allows bi-directional traffic on a single coaxial cable. Reverse channel signals propagate to the headend from 5 to 108 MHz. Forward path signals go from the headend from 162 MHz to the upper frequency limit. The diplex crossover band is located from 108 to 162 MHz.
Mini-Slot - A “mini-slot” is an integer multiple of 6.25-microsecond increments. The relationship between mini-slots, bytes and time ticks is described in section 0.
Moving Picture Experts Group (MPEG) - A voluntary body which develops standards for digital compressed moving pictures and associated audio.
MPEG - See Moving Picture Experts Group.
MSAP - See MAC Service Access Point.
Multimedia Cable Network System (MCNS) partners - A consortium of Comcast Cable Communications, Inc., Cox Communications, Tele-Communications, Inc., and Time Warner Cable, interested in deploying high-speed data communications systems on cable television systems.
Multipoint Access - User access in which more than one terminal equipment is supported by a single network termination.
Multipoint Connection - A connection among more than two data network terminations.

National Cable Television Association (NCTA) - A voluntary association of cable television operators which, among other things, provides guidance on measurements and objectives for cable television systems in the USA.
National Television Systems Committee (NTSC) - Committee which defined the analog color television broadcast standard used today in North America.
Network Layer - Layer 3 in the Open System Interconnection (OSI) architecture; the layer that provides services to establish a path between open systems.
Network Management - The functions related to the management of data link layer and physical layer resources and their stations across the data network supported by the hybrid fiber/coax system.
Open Systems Interconnection (OSI) - A framework of ISO standards for communication between different systems made by different vendors, in which the communications process is organized into seven different categories that are placed in a layered sequence based on their relationship to the user. Each layer uses the layer immediately below it and provides a service to the layer above. Layers 7 through 4 deal with end-to-end communication between the message source and destination, and layers 3 through 1 deal with network functions..
Organizationally Unique Identifier (OUI) - A 3-octet IEEE assigned identifier that OUI can be used to generate Universal LAN MAC addresses and Protocol Identifiers per ANSI/IEEE Std 802 for use in Local and Metropolitan Area Network applications.
OSI - See Open Systems Interconnection.
OUI - See Organization Unique Identifier.
Packet Identifier (PID) - A unique integer value used to identify elementary streams of a program in a single- or multi-program MPEG-2 stream.
PHY - See Physical (PHY) Layer.
Physical (PHY) Layer - Layer 1 in the Open System Interconnection (OSI) architecture; the layer that provides services to transmit bits or groups of bits over a transmission link between open systems and which entails electrical, mechanical and handshaking procedures.
Physical Media Dependent (PMD) Sublayer - A sublayer of the Physical Layer which is concerned with transmitting bits or groups of bits over particular types of transmission link between open systems and which entails electrical, mechanical and handshaking procedures.
PID - See Packet Identifier.
PMD - See Physical Media Dependent (PMD) Sublayer.
Program-Specific Information (PSI) - In MPEG-2, normative data necessary for the demultiplexing of Transport Streams and the successful regeneration of programs.
Program Stream - In MPEG-2, a multiplex of variable-length digital video and audio packets from one or more program sources having a common time-base.
Protocol - A set of rules and formats that determines the communication behavior of layer entities in the performance of the layer functions.
PSI - See Program-Specific Information.
QAM - See Quadrature Amplitude Modulation.
QPSK - See Quadrature Phase-Shift Keying.
Quadrature Amplitude Modulation (QAM) - A method of modulating digital signals onto a radio-frequency carrier signal involving both amplitude and phase coding.

Quadrature Phase-Shift Keying (QPSK) - A method of modulating digital signals onto a radio-frequency carrier signal using four phase states to code two digital bits.
Radio Frequency (RF) - In cable television systems, this refers to electromagnetic signals in the range 5 to 1000 MHz.
Request For Comments (RFC) - A technical policy document of the IETF; these documents can be accessed on the World Wide Web at http://ds.internic.net/ds/rfcindex.html.
Return Loss - The parameter describing the attenuation of a guided wave signal (e.g., via a coaxial cable) returned to a source by a device or medium resulting from reflections of the signal generated by the source.
Reverse Channel - The direction of signal flow towards the headend, away from the subscriber; equivalent to Upstream.
RFC - See Request for Comments.
Routing Information Protocol (RIP) - A protocol of the IETF for exchanging routing information about IP networks and subnets.
Service Access Point (SAP) - The point at which services are provided by one layer, or sublayer to the layer immediately above it.
Service Data Unit (SDU) - Information that is delivered as a unit between peer service access points
Service Identifier (SID) - See section 0.
SID - See Service Identifier.
Simple Network Management Protocol (SNMP) - A network management protocol of the IETF.
SMS - See Spectrum Management System.
SNAP - See Subnetwork Access Protocol.
SNMP - See Simple Network Management Protocol.
Spectrum Management System (SMS) - A system, defined in [SMS], for managing the RF cable spectrum.
Sublayer - A subdivision of a layer in the Open System Interconnection (OSI) reference model.
Subnetwork - Subnetworks are physically formed by connecting adjacent nodes with transmission links.
Subnetwork Access Protocol (SNAP) - an extension of the LLC header to accommodate the use of 802-type networks as IP networks.
Subscriber - See End User.
Subsplit - A frequency-division scheme that allows bi-directional traffic on a single cable. Reverse path signals come to the headend from 5 to 30 (up to 42 on Extended Subsplit systems) MHz. Forward path signals go from the headend from 50 or 54 MHz to the upper frequency limit of the cable network.
Subsystem - An element in a hierarchical division of an Open System that interacts directly with elements in the next higher division or the next lower division of that open system.
Systems Management - Functions in the application layer related to the management of various open systems Interconnection (OSI) resources and their status across all layers of the OSI architecture.
TFTP - See Trivial File-Transfer Protocol.

Tick - 6.25-microsecond time intervals that are the reference for upstream mini-slot definition and upstream transmission times
Tilt - Maximum difference in transmission gain of a cable television system over a given bandwidth (typically the entire forward operating frequency range).
TLV - See Type/Length/Value.
Transit Delay - The time difference between the instant at which the first bit of a PDU crosses one designated boundary, and the instant at which the last bit of the same PDU crosses a second designated boundary.
Transmission Control Protocol (TCP) - A transport-layer Internet protocol which ensures successful end-to-end delivery of data packets without error.
Transmission Convergence Sublayer - A sublayer of the Physical Layer that provides an interface between the Data Link Layer and the PMD Sublayer.
Transmission Link - The physical unit of a subnetwork that provides the transmission connection between adjacent nodes.
Transmission Medium - The material on which information signals may be carried; e.g., optical fiber, coaxial cable, and twisted-wire pairs
Transmission System - The interface and transmission medium through which peer physical layer entities transfer bits.
Transmit On/Off Ratio - In multiple-access systems, the ratio between the signal powers sent to line when transmitting and when not transmitting.
Transport Stream - In MPEG-2, a packet-based method of multiplexing one or more digital video and audio streams having one or more independent time bases into a single stream.
Trivial File-Transfer Protocol (TFTP) - An Internet protocol for transferring files without the requirement for user names and passwords that is typically used for automatic downloads of data and software.
Trunk Cable - Cables that carry the signal from the headend to groups of subscribers. The cables can be either coaxial or fiber depending on the design of the system.
Type/Length/Value (TLV) - An encoding of three fields, in which the first field indicates the type of element, the second the length of the element, and the third field the value.
Upstream - The direction from the subscriber location toward the headend.

Acknowledgment

John Ulm, David Unger, Wilson Sawyer and Gerry White of Bay Networks, Inc. Data Over Cable Division wrote sections 0 and 0 through 0, as well as Appendices A through D and G.

Steven Anderson, Tom Kolze, Victor Hou and Clive Holborow of General Instrument Corporation wrote section 0 and Appendix E.

The MCNS partners are grateful to these individuals and organizations for their contributions.

This page intentionally left blank.