Trials@uspto.gov
571-272-7822

Paper 38
Date: August 29, 2025

UNITED STATES PATENT AND TRADEMARK OFFICE

BEFORE THE PATENT TRIAL AND APPEAL BOARD

COMCAST CABLE COMMUNICATIONS, LLC,
Petitioner

v.

ENTROPIC COMMUNICATIONS, LLC,
Patent Owner.

IPR2024-00446
Patent 8,223,775 B2

Before JON M. JURGOVAN, FREDERICK C. LANEY, and AARON W. MOORE, *Administrative Patent Judges*.

MOORE, *Administrative Patent Judge*.

JUDGMENT
Final Written Decision
Determining All Challenged Claims Unpatentable
35 U.S.C. § 318(a)

TABLE OF CONTENTS

I. BACKGROUND 2
A. Related Matters 2
B. The ’775 Patent 3
C. Illustrative CNiclaims 5
D. Evidence 6
E. Asserted Grounds 7
II. ANALYSIS 8
A. Level of Ordinary Skill in The Art 8
B. Claim Construction 8
C. Obviousness 9
1. Rabenko 10
2. Gaspar 13
3. Kim 14
4. Issues Common to All Claims 15
a. “DOCSIS controller” 15
b. a data networking engine and cable modem engine implemented in a “first circuit” and “second circuit” 19
c. “the cable modem engine configured to enable upgrades to its software in a manner that is independent of upgrades to the software of the data networking engine” ... 25
5. Claim 2: “all DOCSIS functions are localized in the cable modem engine” 27
6. Claim 12: “the DOCSIS MAC processor is an ARM9TDMI-based RISC processor” and “the DOCSIS controller is an ARM940-based RISC processor” 28
7. Obviousness Conclusion 30
III. CONCLUSION 31
IV. ORDER 32

I. BACKGROUND

Comcast Cable Communications, LLC ("Petitioner") filed a Petition (Paper 2 ("Pet.")) requesting *inter partes* review of claims 1–20 (the "challenged claims") of U.S. Patent No. 8,223,775 B2 (Ex. 1001, "the '775 patent"). Entropic Communications, LLC ("Patent Owner") filed a Preliminary Response. Paper 8 ("Prelim. Resp.").

The Board instituted *inter parties* review on September 3, 2024 (Paper 11, "Inst. Dec."), Patent Owner filed a Response (Paper 19, "PO Resp."), Petitioner filed a Reply (Paper 23, "Pet. Reply"), and Patent Owner filed a Sur-reply (Paper 31, "PO Sur-reply").

We held a hearing on June 2, 2025, and a transcript of the hearing is included in the record, as are the demonstratives. *See* Paper 37 ("Tr."); Ex. 1028 (Petitioner Demonstratives); Ex. 2016 (Patent Owner Demonstratives).

We issue this Final Written Decision under 35 U.S.C. § 318(a) and 37 C.F.R. § 42.73 and, for the reasons that follow, determine that Petitioner has shown, by a preponderance of the evidence, that claims 1–20 are unpatentable.

A. Related Matters

Both parties identify, as matters currently involving the '775 patent, *Entropic Communications, LLC v. Comcast Corp. et al.*, No. 2:23-cv-01050 (C.D. Cal.), and *Entropic Communications, LLC v. Cox Communications, Inc. et al.*, No. 2:23-cv-01049 (C.D. Cal.). *See* Pet. iv–v; Paper 3, 1; Paper 7, 1. The parties also identify a terminated case, *Entropic Communications, LLC. v. Charter Communications, Inc. et al.*, No. 2:22-cv-00125 (E.D. Tex.) ("*Entropic v. Charter*"), that involved the '775 patent. *See* Pet. v; Paper 3, 1; Paper 7, 1.

Patent Owner identifies a second petition challenging the ’775 patent, *Cox Communications, Inc. et al. v. Entropic Communications, LLC*, IPR2024-00579 (PTAB), which was denied on September 25, 2024. *See* Paper 3, 1; Paper 7, 1.

B. The ’775 Patent

The ’775 patent is titled “Architecture for a Flexible and High-Performance Gateway Cable Modem” and “relates to a cable modem system having a functionally partitioned and flexible architecture.” *Id.* at 1:7–10, 1:13–16.

Figure 1 of the patent, reproduced below, is a block diagram of a cable modem system architecture 100.

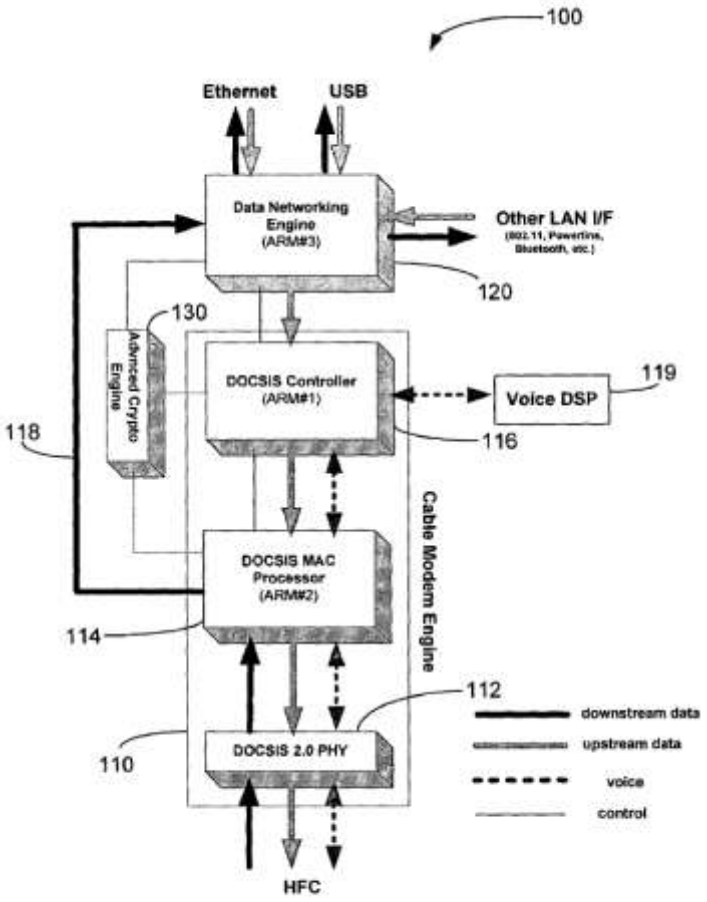

Figure 1

Figure 1 is a block diagram of cable modem system architecture 100. See Ex. 1001, 2:49–50.

The cable modem includes three major subsystems: cable modem engine (CME) 110, data networking engine (DNE) 120, and advanced crypto engine (ACE) 130. *Id.* at 2:49–54. Cable modem engine 110 is divided into three functional blocks: Data Over Cable Service Interface Specification (DOCSIS) physical (PHY) layer 112, DOCSIS Media Access Control (MAC) processor 114, and DOCSIS controller 116. *Id.* at 2:55–59.

Figure 2, reproduced below, is a functional block diagram implementing the cable modem architecture of Figure 1.

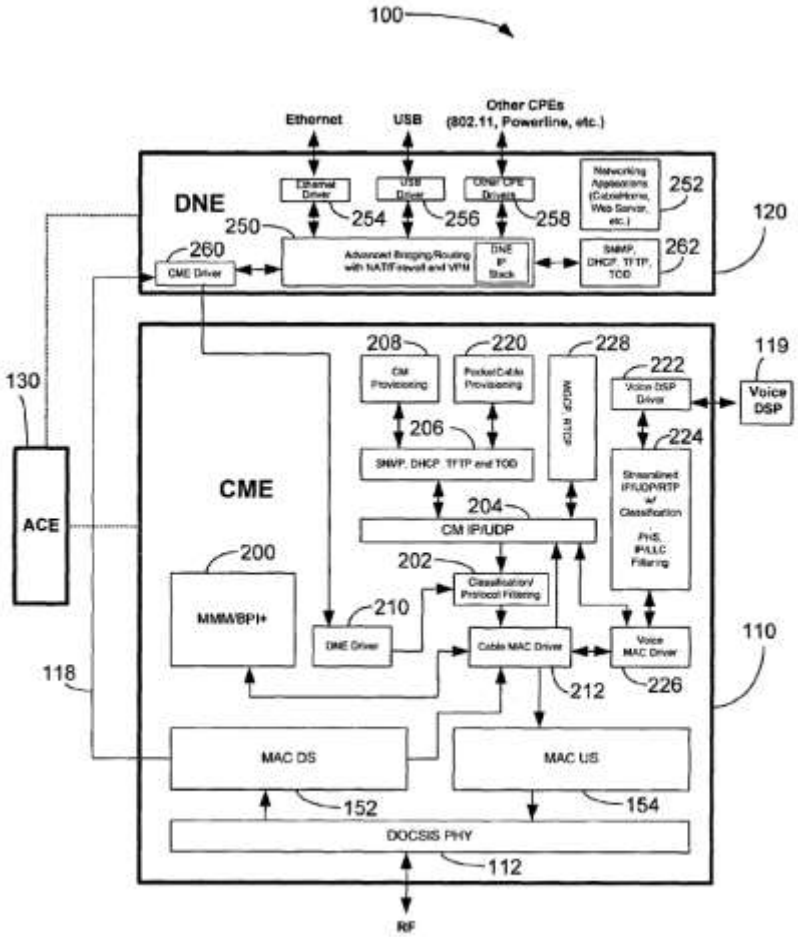

Figure 2

Figure 2 is a functional block diagram illustrating in greater detail cable modem engine 110 and data networking engine 120. See Ex. 1001, 2:53–55.

As shown in Figure 2, processor 114 is represented by MAC downstream (DS) block 152 and MAC upstream (US) block 154. *See id.* at 3:18–20. Controller 116 implements DOCSIS functions as follows: MAC management message (MMM)/(baseline privacy interface) BPI+ (block 200), classification and protocol filtering (block 202), cable modem Internet Protocol (IP)/User Data Protocol (UDP) (block 204), simple network management protocol (SNMP), dynamic host configuration protocol (DHCP), trivial file transfer protocol (TFTP) and time of day (TOD) functionality (block 206), and cable modem provisioning (block 208). *See id.* at 3:25–38.

Data networking engine 120 is responsible for data networking, including advanced multi-port bridging/routing with network address translation (NAT)/firewall and virtual private network (VPN) (block 250), and home networking applications (CableHome and Web Server) (block 252). *See id.* at 3:49–53.

C. Illustrative Claims

Petitioner challenges claims 1–20. *See* Pet. 9–10. Claims 1, 14, and 18 are independent. Claims 2–13 depend, directly or indirectly, from claim 1, claims 15–17 depend from claim 14, and claims 19 and 20 depend from claim 18. Claim 18, reproduced below, illustrates the claimed subject matter.

> 18. [18A[1]] A cable modem system comprising:
>
> [18B] a data networking engine implemented in a first circuit that includes at least one processor, the data networking engine programmed with software that when executed by the at least one processor of the first circuit causes the data networking engine to perform home networking functions including interfacing with customer provided equipment;

[1] We use Petitioner's designations for the elements of claim 18. *See* Pet. 80–85.

[18C] a cable modem engine implemented in a second circuit that includes at least one processor, the second circuit being separate from the first circuit, the cable modem engine programmed with software that when executed by the at least one processor of the second circuit causes the cable modem engine to perform cable modem functions other than the home networking functions performed by the data networking engine, the cable modem functions including interfacing with cable media, and [18D] the cable modem engine configured to enable upgrades to its software in a manner that is independent of upgrades to the software of the data networking engine, [18E] the cable modem engine including a DOCSIS controller and a DOCSIS MAC processor, [18F] the DOCSIS MAC processor configured to process downstream PDU packets and forward the processed packets directly to the data networking engine without the involvement of the DOCSIS controller in order to boost downstream throughput; and

[18G] a data bus that connects the data networking engine to the cable modem engine, wherein the cable modem functions performed by the cable modem engine are completely partitioned from the home networking functions performed by the data networking engine.

Ex. 1001, 7:33–8:27. Independent claim 1 is very similar to claim 18, but recites that the processor of the data networking engine is a RISC processor, and independent claim 14 is a method claim corresponding to claim 1.

D. Evidence

Petitioner relies on the following references:

Name	Reference	Exhibit
Rabenko	US Pat. App. Pub. 2002/0006137 A1	1005
Gaspar	US Pat. App. Pub. 2004/0004974 A1	1006
Kim	US Pat. App. Pub. 2002/0091861 A1	1007
Lu	US Pat. App. Pub. 2002/0078249 A1	1012
Klein	US Pat. App. Pub. 2004/0019765 A1	1016

Name	Reference	Exhibit
Kim ’678	US Pat. App. Pub. 2002/0138678 A1	1015
Koperda	US Pat. App. Pub. 2002/0065935 A1	1010
Johnson	US Pat. App. Pub. 2004/0125754 A1	1009

Petitioner relies on Declarations of Sayfe Kiaei, Ph.D. (Ex. 1002 and 1018), and Patent Owner relies on Declarations of Samuel H. Russ, Ph.D. (Ex. 2003 and 2008).

E. Asserted Grounds

Petitioner asserts that the challenged claims are unpatentable on the following grounds (*see* Pet. 9–10):

Claims Challenged	35 U.S.C. §[2]	References
1–7, 10, 12, 14, 15, 18–20	103(a)	Rabenko, Gaspar, Kim
1–7, 10, 12, 14, 15	103(a)	Rabenko, Gaspar, Kim, Lu
12	103(a)	Rabenko, Gaspar, Kim, Lu, Klein, Kim ’678
8	103(a)	Rabenko, Gaspar, Kim, Lu, Koperda
9	103(a)	Rabenko, Gaspar, Kim, Lu Johnson
11, 13, 16, 17	103(a)	Rabenko, Gaspar, Kim, Lu Johnson

[2] Because the challenged claims of the ’775 patent have an apparent effective filing date before March 16, 2013, we apply the pre-AIA version of § 103.

II. ANALYSIS

We discuss the appropriate level of skill in the art, claim construction, and patentability, in that order.

A. Level of Ordinary Skill in The Art

Petitioner asserts that a person of ordinary skill in the art at the time of the invention "would have had at least a degree in computer or electrical engineering, computer science, information systems, or a similar discipline, along with three-to-four years of experience with the design and/or implementation of cable modems within network-based content delivery systems" and that "[a]dditional education may substitute for professional experience, and significant work experience [could have] substitute[d] for formal education." Pet. 12 (citing Ex. 1002 ¶¶ 40–45).

Patent Owner does not challenge the level of ordinary skill in the art proposed by Petitioner and its expert, so we adopt Petitioner's proposal, which we find to be reasonable and consistent with the '775 patent's specification and the cited prior art.

B. Claim Construction

We construe claims using the standard that would be applied in a civil action under 35 U.S.C. § 282(b), giving terms their ordinary and customary meaning to one of ordinary skill in the art in view of the specification and prosecution history. *See* 37 C.F.R. § 42.100(b).

Petitioner explains that, in *Entropic v. Charter*, Patent Owner advocated that the plain and ordinary meaning applies for all claim terms, and that position was adopted by the Court for all relevant claim terms with the exception of the following limitation of claim 18: "wherein the cable modem functions performed by the cable modem engine are completely partitioned from the home networking

functions performed by the data networking engine" (recited in claims 1, 14, and 18). Pet. 12–13 (citing Ex. 1011, 7–25, 61–62). Petitioner submits that the Court construed this limitation to mean "wherein the cable modem engine and the data networking engine are not necessarily physically separate but are functionally separate such that the cable modem functions are performed only by the cable modem engine and the home networking functions are performed only by the data networking engine." *Id.* (citing Ex. 1011, 17; Ex. 1002 ¶¶ 46–47).

In this proceeding, Petitioner asserts that "[a]ll claim terms . . . should be given their ordinary and customary meaning" to a person of ordinary skill in the art. Pet. 12. Petitioner does not propose a construction for any claim term. Patent Owner also does not propose a construction for any claim term.

We discuss the meaning of "DOCSIS controller" below, but otherwise need not construe any terms in this decision.

C. Obviousness

Petitioner asserts that claims 1–7, 10, 12, 14, 15, and 18–20 are unpatentable as obvious in view of Rabenko, Gaspar, and Kim. *See* Pet. 13–64. Essentially, Petitioner argues that Rabenko discloses all of the claim elements, but alternatively relies on Gaspar and/or Kim for the concept of the cable modem engine being upgradable independent of the data networking engine.

Petitioner then adds Lu for the RISC processor of claims 1–7, 10, 12, 14, and 15 (*see* Pet. 41–45); Klein and Kim '678 for the specific processor models of claim 12 (*see* Pet. 56–61); Koperda for the specific types of data processing of claim 8 (*see* Pet. 64–69); and Johnson for the CableHome specification of claims 9, 11, 13, 16, and 17 (*see* Pet. 69–73).

We begin with an overview of the primary references and then turn to the parties' arguments.

1. Rabenko

Rabenko is titled "System and Method for Supporting Multiple Voice Channels," and discloses "[a] communications system with a plurality of media terminal adapters, a telephone line, and a gateway configured to exchange voice and data packets between a network and each of the media terminal adapters over the telephone line." *See* Ex. 1005, Abstract. Figure 1b of Rabenko, reproduced below, illustrates the signal flow path. *See id.* ¶¶ 8, 44.

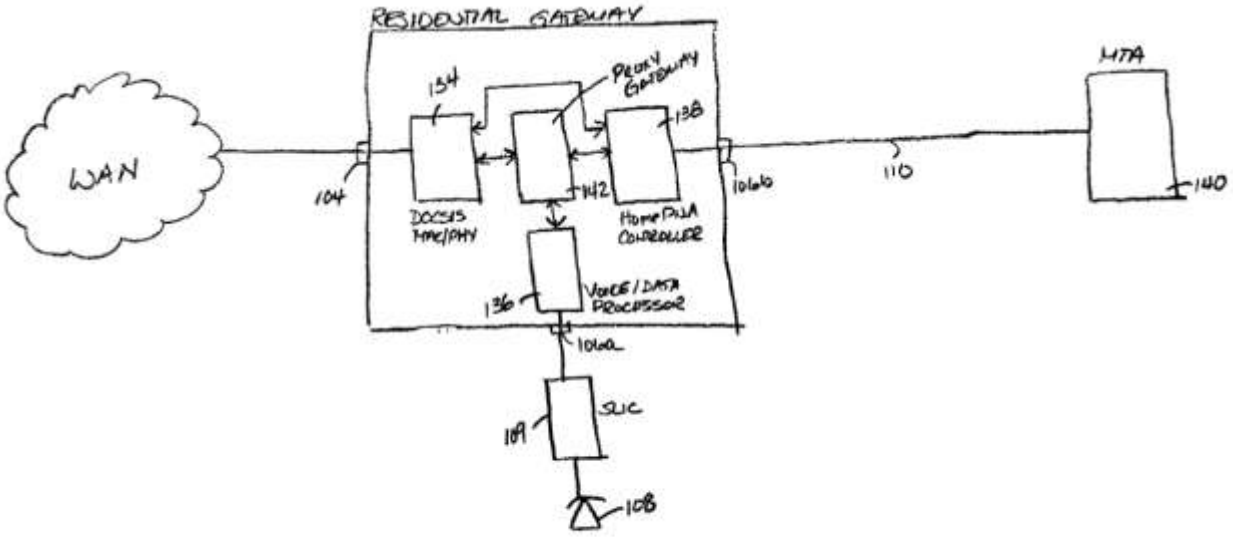

FIG. 1b

Rabenko's Figure 1b illustrates a signal flow path of packet in a residential gateway of a home telecommunications system. See Ex. 1005 ¶¶ 8, 44.

In Figure 1b, DOCSIS MAC/PHY 134 provides an interface to the wide area network (WAN) within residential gateway 102. *See id.* ¶ 44. All packets that arrive at or leave from the residential gateway via the WAN go through DOCSIS MAC/PHY 134. *See id.* DOCSIS MAC/PHY 134 translates the packet format from DOCSIS to an internal format that may be protocol independent. *See id.* In

the downstream direction, DOCSIS MAC/PHY 134 determines whether the packet payload is voice or data. *See id.* ¶ 45.

If the packet payload is data, then DOCSIS MAC/PHY 134 routes the packet directly to HomePNA controller 138, which translates the data packet to a HomePNA packet and transmits the HomePNA packet to a media terminal adapter (MTA) 140 (a HomePNA device) over HomePNA LAN 110. *See id.* Conversely, if DOCSIS MAC/PHY 134 determines that the packet payload is voice, the packet is routed to proxy gateway 142. *See id.*

Proxy gateway 142 further determines whether the packet is destined for HomePNA LAN 110 or POTS telephone 108, and, if the packet is destined for POTS telephone 108, the packet is routed to a voice and data processor 136 for decompression and depacketization. *See id.* Voice and data processor 136 generates an analog voice signal from the decompressed signal and delivers the analog voice signal to a POTS telephone. *See id.* If proxy gateway 142 determines that the packet is destined for HomePNA LAN 110, then the processed packet is routed to HomePNA controller 138 for conversion to a HomePNA format for transmission to MTA 140 over HomePNA LAN 110. *See id.*

Figure 2 of Rabenko, reproduced below, shows a system block diagram of an embodiment of the residential gateway.

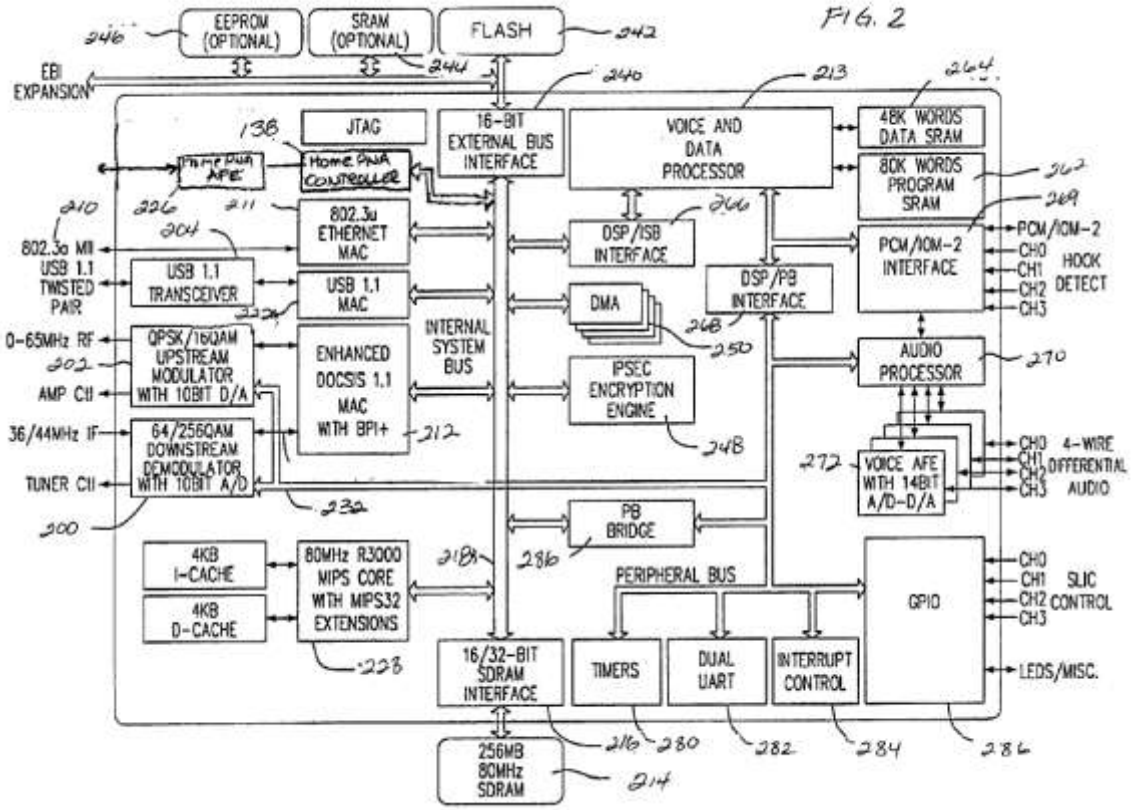

Figure 2 of Rabenko, reproduced above, shows a system block diagram of a residential gateway. Ex. 1005 ¶¶ 9, 50.

Rabenko provides that "[t]he described exemplary embodiment [of Figure 2] may provide a highly integrated solution implemented in a single chip that is compliant with the Data Over Cable Service Interface Specification (DOCSIS)." *Id.* ¶ 50. In Figure 2, a QPSK upstream modulator 202 is configured to transmit data to the cable head end, a QAM downstream demodulator 200 is configured to receive data from the cable head end, and a QPSK out of band downstream demodulator 206 is configured to receive out of band MPEG-2 encoded messages from the cable head end. *See id.*

The residential gateway includes voice and data processor 213. *See id.* ¶ 74, Fig. 2. The described embodiment of voice and data processor 213 supports the exchange of voice, as well as facsimile and modem, between POTS telephone 108 and the cable head end. *See id.* Rabenko explains that "voice and data processor 213 may be implemented with a variety of technologies including, by way of example, embedded communications software that enables transmission of voice over packet based networks," where "[t]he embedded communications software is preferably run on a programmable digital signal processor (DSP)." *Id.* ¶¶ 74–75.

The residential gateway also includes HomePNA controller 138, which provides bi-directional communication with devices such as a HomePNA phone operating on a HomePNA LAN via a subscriber port of the residential gateway. *See id.* ¶ 80. HomePNA controller 138 may include DMA channels that are used for fast data communication of processed data to system memory 214 via ISB 218. *See id.*

2. Gaspar

Gaspar is titled "Method and System for Optimizing the Design of a Network Controller," and discloses a system for networking computers in a home phone line network. Ex. 1006, Abstract. "The system includes a first controller that includes a physical layer (PHY) configured to be coupled to a phone line, and a media access control (MAC) configured to be coupled to the PHY." *Id.* The MAC is separated from the PHY by a partition that enables the MAC to be implemented as a separate circuit from the PHY, such that the MAC can be modified during and after the design process while leaving the PHY intact. *See id.* By partitioning the MAC and PHY circuits, the MAC circuit can be implemented with a programmable device, such as a field programmable gate array (FPGA) and

the controller can be debugged or upgraded by modifying the MAC circuit, leaving the PHY circuit intact. *See id.* ¶ 14.

3. Kim

Kim is titled "Modular-Type Home Gateway System Including ADSL Controller and HOMEPNA Controller" and Figure 3, reproduced below, is a block diagram of a modular-type home gateway system:

FIG. 3

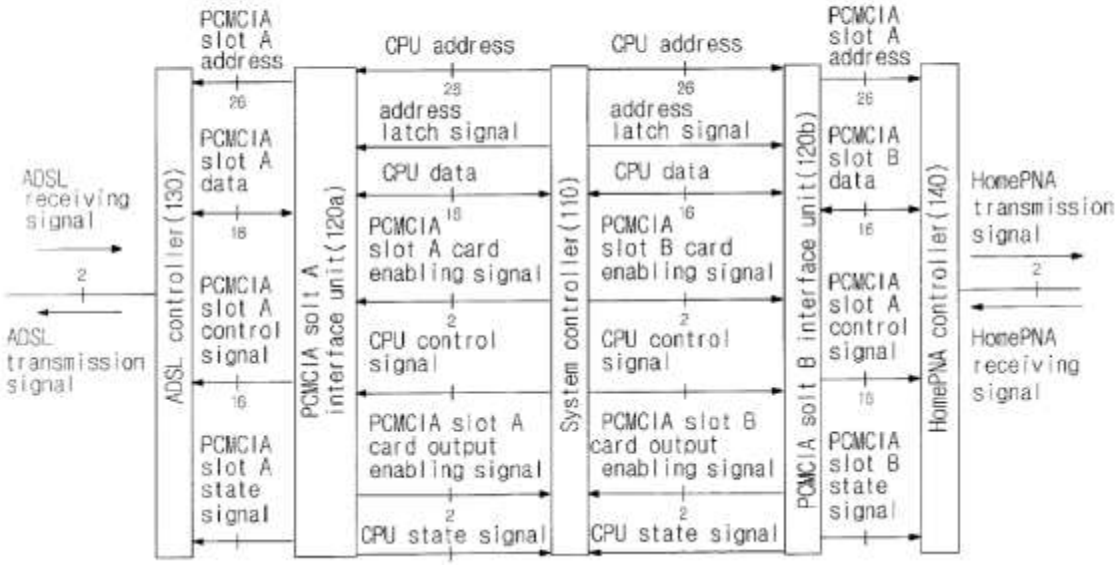

Figure 3 is a block diagram of modular-type home gateway system 100. See Ex. 1007 ¶¶ 20, 32.

Modular-type home gateway system 100 includes, among other things, ADSL controller 130 and HomePNA controller 140. *See id.* ¶¶ 26, 42. Kim describes how the gateway system may maintain the system controller and replace either the HomePNA controller or the ADSL controller, thereby improving the whole performance of the home gateway.

4. Issues Common to All Claims

As noted, Petitioner argues that independent claims 14 and 18 would have been obvious in view of Rabenko, adding Gaspar for its disclosure of a processor, and adding Kim for the concept of the cable modem engine being configured to enable software upgrades independent of upgrades to the software of the data networking engine software. *See* Pet. 13–38 (claim 1), 61–63 (claim 14); *id.* at 17–20 (addition of Gaspar); *id.* at 28–31 (addition of Kim). For independent claims 1 and 14, Petitioner adds Lu for the "RISC processor." *See* Pet. 42–45.

Patent Owner argues that the '775 patent "seeks to integrate a variety of new services with the traditional cable modem service in an efficient and cost-effective manner" with "the partitioned architecture recited in the claims." PO Resp. 1. Patent Owner then asserts that "Petitioner's primary reference in each of its grounds, Rabenko, is directed toward [an] entirely different purpose of delivering a variety of signals entering a premises over a single wire to multiple terminals" and that "Rabenko is simply not concerned with efficient and cost-effective partitioning of a cable modem." PO Resp. 1.

Patent Owner argues that, as a result of the different purposes, "Petitioner fails to show that its grounds disclose or render obvious the required architecture, including [1] a "DOCSIS controller," [2] a data networking engine ("DNE") and cable modem engine ("CME") implemented in a "first circuit" and "second circuit," respectively, and [3] a CME "configured to enable upgrades to its software in a manner that is independent of upgrades to the software" of the DNE. *See* PO Resp. 1. We address Patent Owner's arguments in the order presented.

a. "DOCSIS controller"

The Petition contends that "Rabenko's cable modem engine includes voice and data processor 136/213 ('DOCSIS controller') and DOCSIS MAC 134/212

('DOCSIS MAC processor')." Pet. 31 (citing Ex. 1002 ¶¶ 134–139). Petitioner asserts that "[l]ike the 'DOCSIS controller' of the '775 Patent, Rabenko's voice and data processor 136/213 is used for processing and transporting voice over packet-based networks." *Id.* (citing Ex. 1005 ¶¶ 74, 85, 87).

Despite some disagreement during the briefing about the meaning of "DOCSIS controller," the parties now appear to agree that Patent Owner's suggested construction is generally correct. *See* PO Resp. 13 ("[T]he claimed DOCSIS controller must control DOCSIS functions. This does not mean that it must control all DOCSIS functions or all DOCSIS functions identified in the specification."); Sur-reply 1 ("Under its plain meaning, a 'DOCSIS controller' must control or implement one or more DOCSIS functions."); Tr. 66:19–21 ([Q]: "And as long the controller performs one of those functions that of, for DOCSIS, it qualifies as a DOCSIS – [Petitioner's Counsel]: "It's a DOCSIS function [*sic*, controller] in our point of view."). We accordingly construe "DOCSIS controller" to mean "a physical or functional controller that controls, implements, or performs a DOCSIS function." It is not limited to a certain number or category of DOCSIS functions.

The question, then, is whether Petitioner has identified a DOCSIS controller, as that term has been construed, in Rabenko. We find that it has.

As noted, Petitioner contends that Rabenko's voice and data processor 136/213 is a DOCSIS controller. *See* Pet. 31. Petitioner asserts that "[l]ike the 'DOCSIS controller' of the '775 Patent, Rabenko's voice and data processor 136/213 is used for processing and transporting voice over packet-based networks." *Id.* (citing Ex. 1005 ¶ 74, 85, 87).

Patent Owner argues that "Rabenko's 'voice and data processor' simply has nothing to do with DOCSIS and therefore cannot be a 'DOCSIS controller.'" PO

Resp. 11. With respect to the embodiment shown in Rabenko's Figure 1b, we agree, because Rabenko describes how "[a]nalog voice signals from the POTS telephone 108 are transmitted to the voice and data processor" which "samples the analog voice signal, compresses the voice signals and packetizes the compressed voice into the internal packet format," after which "[t]he voice packets from the voice and data processor 136 are coupled to the proxy gateway 142 for processing." Rabenko ¶ 47. This does not appear to implicate DOCSIS, as it describes only processing the signal and converting it into an internal (i.e., not DOCSIS) packet format.

However, Rabenko's paragraph 74, which is cited in the Petition, explains that, in the embodiment shown in Figure 2, "the voice and data processor 213 includes the proxy gateway function described in connection with FIG. 1b." Rabenko ¶ 74. Rabenko further describes how, in that embodiment, "the applications layer includes an MTA call client 520 which provides overall control." *Id.* ¶ 97. And Rabenko further explains that the "exemplary embedded MTA call client 520," i.e., the one in the VDP, "may include MTA device provisioning logic 538 that *enables the embedded MTA call client 520 to register and provide subscriber services over the DOCSIS network 526*." *Id.* ¶ 101, 103 (emphasis added). We find this sufficient to make the VDP of this embodiment a controller that controls, implements, or performs a DOCSIS function, i.e., a DOCSIS controller as we have construed that term according to the parties' implicit agreement.[3]

[3] Because we find that the embedded MTA call client registers and provides services over the DOCSIS network, we need not consider Petitioner's arguments regarding VOIP generally or PacketCable.

Patent Owner argues that "Petitioner's argument fails for two reasons": first, that the "argument is contrary to the Petition's argument which relied upon the proxy gateway functions (allegedly including the MTA call client) being 'implemented by' MIPS core 228, rather than the VDP"; and, second, that "even if Petitioner could shift its theory to the proxy gateway being implemented by the VDP (rather than the MIPS core), Petitioner still cannot show that the MTA call client is part of Rabenko's VDP." PO Resp. 12–13.

We find Patent Owner's first argument unpersuasive because, although the Petition states that "[c]able modem functions implemented by the proxy gateway 142 would be implemented by core 228 using software," that is not required to satisfy any claim limitation. Cited paragraph 74 of Rabenko explains that "[i]n the described exemplary embodiment," i.e., the embodiment of Figure 2, "the voice and data processor 213 includes the proxy gateway function described in connection with FIG. 1b." To the extent there is any inconsistency in the Petition, we deem it immaterial to the analysis.

For the second argument, Patent Owner asserts that Rabenko "merely says that some proxy gateway functions and, more specifically, those relating to Fig. 1b (i.e., routing voice packets to the HomePNA controller or the POTS telephone) can be implemented in the VDP," and that those "functions do not include the MTA call client functions Petitioner alleges are DOCSIS functions." Sur-reply 14. We disagree. As explained above, Rabenko describes how, in the embodiment in which the voice and data processor 213 includes the proxy gateway function, "the applications layer includes an MTA call client 520 which provides overall control." Ex. 1005 ¶ 97.

Patent Owner relatedly argues that "Rabenko never says that the MTA call client may be implemented in either the VDP or the proxy gateway" but "merely

teaches that the 'proxy gateway function is implemented . . . at the applications layer'" and that "Rabenko does not state that the call client is a part of the proxy gateway." Sur-reply 14 (citing Ex. 1005 ¶ 97). We disagree. Rabenko states, in the first sentence of paragraph 97, that "the proxy gateway function can be implemented in the voice and data processor," that "[i]n the described exemplary embodiment, the proxy gateway function is implemented with embedded software at the applications layer," and that "the applications layer also includes an MTA call client 520 which provides overall control." We read this to mean that the call client is implemented at the applications layer in the voice and data processor.

For these reasons, having carefully considered the fully developed record, we conclude that the Petition establishes that Rabenko's voice and data processor 136/213 is a "DOCSIS controller."

b. a data networking engine and cable modem engine implemented in a "first circuit" and "second circuit"

For the requirement that the cable modem engine be implemented in a second circuit that that is "separate from the first circuit," Petitioner argues that "[a]s shown in Fig. 1b [as annotated by Petitioner and reproduced below], Rabenko discloses that DOCSIS MAC 134/212 (blue), proxy gateway 142, and voice/data processor 136/213 (red) ("second circuit") are separate components from HomePNA controller 138 and AFE 226 ("first circuit")." Pet. 23.

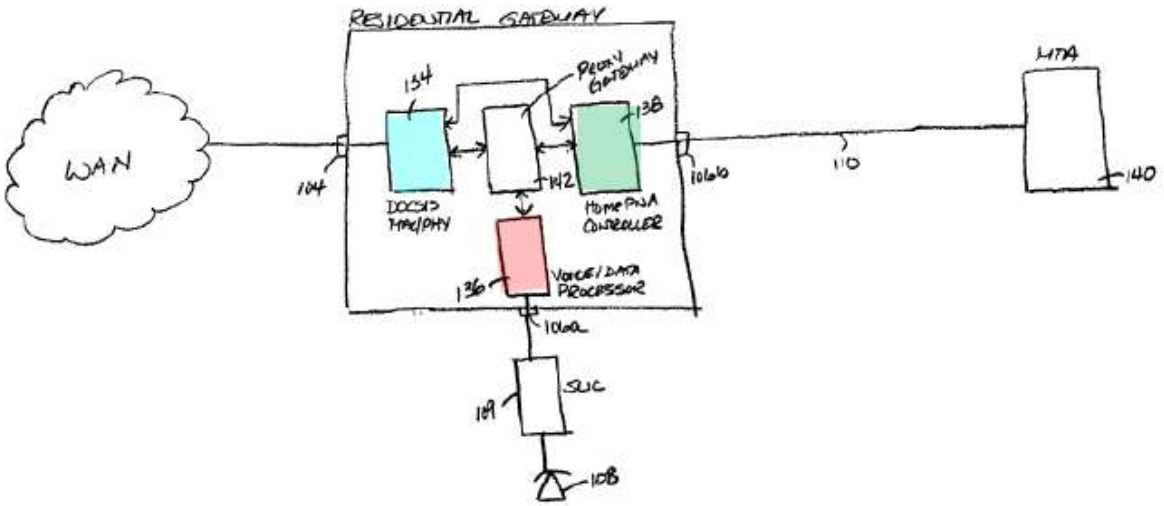

Petitioner's Annotated Version of Rabenko's Figure 1b

We agree that Rabenko discloses a first circuit (e.g., the HomePNA controller 138) and a second circuit (e.g., DOCSIS MAC 134/212, proxy gateway 142, and voice/data processor 136/213) that are separate, as shown in Figure 1b.

Patent Owner points to Figure 2 of the '775 patent and argues that "the specification describes a separate and partitioned DNE and CME that are further implemented in separate processors." PO Resp. 22 (citing Ex. 2008 ¶¶ 63–64). Patent Owner argues that "Rabenko, however, is another matter entirely and reveals no separation between the alleged DNE and the alleged CME." *Id.* at 23. Patent Owner further argues that "[b]ereft of any disclosures in Rabenko concerning a DNE in one circuit separate from a CME implemented in another circuit partitioned from the first, Petitioner resorts to arbitrarily identifying certain elements of Rabenko and proclaiming them to be a DNE and CME, respectively." *Id.* at 24. This not persuasive because the independent claims recite separate "circuits," not separate processors, and because Figures 1b clearly depicts these components as separate.

Patent Owner further argues that "Rabenko never identifies HomePNA controller 138 and AFE 226 as forming either a circuit or a data networking

engine," "[n]or does Rabenko identify the DOCSIS MAC 134/212, proxy gateway, and voice and data processor as forming a second circuit or a cable modem engine," and "Rabenko simply never mentions or suggests that these components are a part of any engine or are specific circuits." PO Resp. 24–25. This is not persuasive because the question is whether the circuits identified by Petitioner are, in fact, separate, not whether Rabenko happens to identify them as such.

Patent Owner also argues that "Petitioner [does not] provide a foundation upon which to reach its conclusions for it fails to provide any criteria by which it or its expert were able to identify which components comprise each "circuit," in violation of its obligations under 37 C.F.R. §§ 42.104(b)(1)-(5)," or "provide any coherent explanation for why a POSITA would identify the separate circuits Petitioner and [Petitioner's expert] insist are present." PO Resp. 25. And, according to Patent Owner, Petitioner's expert's explanation that certain components are part of "separate" "first" and "second circuits" is conclusory because the expert "never tells us what a circuit is beyond implying that circuits are separate when they have separate components." *Id.*

We are not persuaded that the separate circuits analysis is lacking. One of ordinary skill in this art would readily understand that a "circuit" is set of connected electrical components, and "separate" is applied according to its ordinary meaning. We find that Petitioner has met its burden by identifying the components in Rabenko alleged to comprise the two circuits.

Next, Patent Owner argues that "the notion that any ex post hoc identification of separate components could constitute a separate circuit would render the claim terms meaningless" because "each component, being already separate from the other components, could be its own circuit, separate from the other component-circuits in Rabenko's Figure 2" and "therefore, Rabenko's Figure

2 would depict thousands upon thousands of possible separate circuits," which "simply makes no sense and renders the recited 'separate' 'circuit[s] meaningless." PO Resp. 25–26 (quoting Ex. 1008 ¶ 68). We agree that the claim language could cover different circuits, but that is simply a result of claim drafting. The draftsman made a choice to recite separate first and second "circuits" instead of, for example, separate first and second "processors." We also find it unlikely that there could be "thousands upon thousands of possible separate circuits" because each circuit is limited in that it needs to meet other limitations of the claims.

Patent Owner next argues that "Rabenko's voice and data processor is not part of the second circuit but is rather part of yet another separate circuit" because "the voice and data processor does not perform any function in conjunction with the DOCSIS MAC/PHY." PO Resp. 26. This is not persuasive because, as explained above, the voice and data processor may include the proxy gateway and MTA call client with DOCSIS functionality.

Patent Owner then argues, with respect Figure 2 of Rabenko, that "[a]s Dr. Russ explains, there is no suggestion that the DOCSIS MAC/PHY and the voice and data processor form a circuit in Figure 2 and the two elements perform different functions on different signals." PO Resp. 29. We do not perceive a problem. Those two components are electrically connected via data bus 240 and DSP/ISB interface 266. Patent Owner does not propose a construction of "circuit" that might require more. Again, the drafter of the claims elected to use broad language. And Figure 2 is just one embodiment.

Patent Owner further argues that "[t]o the extent that Petitioner contends that a circuit is formed because a path may be drawn between the DOCSIS MAC/PHY and the voice and data processor, that logic suggests that the HomePNA controller is also part of the second circuit rather than the first circuit." PO Resp. 31. Dr.

Russ states that "[w]hile it is true that you can draw a path from the DOCSIS MAC to the voice and data processor, there is a more direct path from the DOCSIS MAC (allegedly part of the CME) to the HomePNA controller (allegedly part of the DNE)." *Id.* (quoting Ex. 2008 ¶¶ 75–76). This is not persuasive because it is not addressing the analysis laid out in the Petition. That one might identify other circuits in Rabenko does not tend to show that the two sets of components identified by Petitioner are not two separate circuits.

Patent Owner also argues that "Petitioner and Dr. Kiaei's reliance upon Figure 2 is even more inexplicable in view of Dr. Kiaei's apparent, material, misapprehension of Figure 2," because he testified that Figure 2 did not necessarily illustrate hardware and instead could represent "purely software," but, "as Dr. Russ explains, Dr. Kiaei's analysis is inconsistent with Figure 2, which plainly depicts hardware elements." PO Resp. 33 (citations omitted). This argument is not persuasive at least because "Dr. Kiaei's apparent, material, misapprehension of Figure 2" is, in fact, consistent with Rabenko's disclosures, which describe Figure 2 as "a system block diagram" and "schematic," and because the "purely software" testimony concerned the DOCSIS 1.1 MAC, not the entirely of Figure 2. *See* Ex. 1005 ¶¶ 9, 50; Ex. 2009, 39:15–20.[4] We agree with Dr. Kiaei that Figure 2 is "simply a system block diagram . . . showing the various different blocks," "not necessarily . . . showing the details of a circuit that is implemented," and that "[i]t could be hardware, it could be hardware and software, it could be a combination of hardware and software and algorithms, et cetera." Ex. 2009, 41:2–9.

[4] "Q. So is that enhanced DOCSIS 1.1 MAC itself a circuit? A. Not necessarily. I mean a -- sorry, is that a circuit. My answer is it could be a – a circuit combining hardware and software within that or it could be purely a software."

We are also unpersuaded by Patent Owner's citation to the institution denial in IPR2024-00579 (*see* PO Resp. 33–34) because, in this case, Rabenko's figures clearly show, in our view, separate circuits, and also because the "logical architecture" shown in the reference at issue in the 00579 case was at higher level than Rabenko's Figures 1B and 2. *See* IPR2024-00579, Paper 9, 12–15, 21–22.

Patent Owner further argues that Rabenko's Figure 1b does not disclose "a CME on one circuit and a DNE on another, separate, circuit" because "[a]s Dr. Russ explains, Figure 1b in fact reveals a direct connection between the DOCSIS MAC/PHY (allegedly a part of the CME) and the proxy gateway (allegedly a part of the DNE) and only an indirect connection between the DOCSIS MAC/PHY and the voice and data processor (which together allegedly form the CME) that run through the proxy gateway." PO Resp. 34. Dr. Russ questions why one would "conclude these elements are on separate circuits that are partitioned from one another in view of these direct connections." *Id.* (quoting Ex. 2008 ¶¶ 81–32). The claims, however, do not require that the circuits be "partitioned from one another," nor do they preclude direct connections between the two circuits. We note that the two separate circuits recited in the claims, the data networking engine and the cable modem engine, are shown as directly connected in Figure 1 of the '775 patent. That the concerns expressed by Dr. Russ apply equally to the '775 patent's own disclosure, suggests again that the real issue here is the breadth of the claim language, not Petitioner's analysis.

Finally, Patent Owner returns to the idea that Rabenko and the '775 patent address different problems, asserting that, because "Rabenko focuses upon 'supporting multiple voice channels' on 'a single wire pair,'" "Rabenko simply lacks the partitioning that is critical to the claimed inventions." PO Resp. 36 (citations omitted). This is not persuasive in view of the fact that Petitioner has

identified separate first and second circuits in Rabenko, and because the claims do not recite "partitioning."

For these reasons, having carefully considered the fully developed record, we conclude that the Petition has established that Rabenko discloses a data networking engine and cable modem engine implemented in separate circuits.

c. "the cable modem engine configured to enable upgrades to its software in a manner that is independent of upgrades to the software of the data networking engine"

Petitioner argues that "[a]lthough Rabenko does not explicitly teach that any of DOCSIS MAC 134/212, proxy gateway 142, or voice/data processor 136/213 is configured to enable upgrades to its software in a manner that is independent of upgrades to the software of the HomePNA controller 138 and AFE 226, Rabenko does teach that "[s]killed artisans recognize the interchangeability of hardware and software under these circumstances, and how best to implement the described functionality for each particular application." Petition 26–27. Petitioner contends that one of ordinary skill in the art would have understood that it would have been obvious to try [independently upgrading the cable modem engine] because, when faced with implementing the upgradability of Rabenko's data networking engine and cable modem engine, there are only a few finite options: to configure them to be updated together or separately." *Id.* at 27.

Dr. Kiaei testifies that one of ordinary skill, "recognizing [that they] are different, partitioned circuits, would have understood that upgrades to software of DOCSIS MAC/PHY 134/DOCSIS MAC 212, proxy gateway 142, or voice/data processor 136/213 would be independent of upgrades to software of the separate HomePNA controller 138 or AFE 226," particularly due to the "different protocols used and the separate functions performed by the two engines." Ex. 1002 ¶ 123.

Patent Owner argues that "[o]ther than asserting [the] obvious-to-try theory, Petitioner makes no assertions about what motivation a POSITA would have to modify Rabenko's purported engines to enable independent upgradability of their software, nor does it make any assertions as to what reasonable expectation of success a POSITA may have." PO Resp. 47. Patent Owner argues that "partitioning the CME and DNE and making the software of each independently upgradeable goes to the heart of the invention because it enhances 'flexibility' and 'performance' and is 'highly desirable.'" PO Resp. 49 (citing Ex. 1001, 1:30–47, 4:25–40; Ex. 2008 ¶ 102). Patent Owner also argues that "Rabenko describes its software as 'embedded software' which is generally not upgradeable." PO Resp. 50 (citing Ex. 2008 ¶¶ 104–107); *see* PO Resp. 52–53.

We do not agree with Petitioner's obvious to try theory because Petitioner does not show that the "few finite options" were known in the prior art. However, we nevertheless agree with Petitioner that it would have been obvious for the cable modem engine to have been configured to enable upgrades to its software in a manner that is independent of upgrades to the software of the data networking engine. This is primarily because this limitation appears to require little more than that a software update could change the cable modem functionality (e.g., the PacketCable or DOCSIS functionality) without changing the data networking engine functionality (e.g., the CableHome functionality). *See* Ex. 1001, 3:49–62.

Gaspar, for example, shows that one of ordinary skill would recognize that the evolution of standards in this field requires controller upgrades, and a software update addressing only a change in the PacketCable standard (because only that standard had changed, for example) would be an upgrade to the cable modem software that would be independent of any upgrades to data networking engine software. We credit Dr. Kiaei's testimony that one of ordinary skill "would have

understood that two different engines performing two different functions and using two different protocols (DOCSIS and PNA) should be separately upgradeable to address protocol changes independently." Ex. 1002 ¶ 123.

We are not persuaded by Patent Owner's arguments about "the heart of the invention," because this limitation does not recite "partitioning" and, as explained above, we find that the combination includes the recited first and second circuits. We also are not persuaded by Patent Owner's arguments about Rabenko's software being embedded because Rabenko describes "embedded software" as one of "a variety of technologies" that may be used to implement the invention, and because the record also shows that it is possible to update embedded software. *See* Ex. 1005 ¶ 74; Ex. 2008 ¶¶ 105–106; Ex. 2004, 8 ("Many modern embedded systems support over-the-air (OTA) updates, allowing for reprogramming without physical access to the device"); Ex. 2005, p. 4.

For these reasons, having carefully considered the fully developed record, we conclude that the Petition has established that Rabenko teaches or suggests a cable modem engine configured to enable upgrades to its software independent of upgrades to the software of the data networking engine.

5. Claim 2: "all DOCSIS functions are localized in the cable modem engine"

The Petition asserts that "[l]ike the 'DOCSIS controller' of the '775 Patent, Rabenko's voice and data processor 136/213 is used for processing and transporting voice over packet based networks" and that "Rabenko's HomePNA controller 138" performs no DOCSIS functions. Pet. 40 (citing Ex. 1005 ¶¶ 74, 85, 87).

Patent Owner argues that "Petitioner . . . fails to show 'all DOCSIS functions' are 'localized in' Rabenko's purported CME because Petitioner fails to account for Rabenko's QPSK out of band downstream demodulator 206 ('QPSK

demodulator'), which performs DOCSIS functions but is not even alleged to be a part of the CME." PO Resp. 58. Patent Owner further argues that "[t]o the extent that Petitioner attempts to argue in its Reply that Rabenko's QPSK out of band demodulator is part of the alleged CME, the Federal Circuit has repeatedly held that Petitioner must make its case in the petition." *Id.* at 61 (citing cases).

Petitioner responds that the Petition identified DOCSIS MAC 134/212 as the cable modem engine, that it specifically cited the QPSK out of band downstream demodulator 206, and that one of ordinary skill "would have known that DOCSIS MAC/PHY 134 in Figure 1b would include the physical layer components in Figure 2 and thus includes QPSK demodulator 206." Reply 25–26 (citing Pet. 21–22).

We agree with Petitioner. The passage from Rabenko cited in the Petition describes the "integrated functions for communicating with a cable head," including the "QPSK out of band downstream demodulator 206," and the Petition then states that the integrated functions for communicating with a cable head end are the "claimed 'cable modem functions'" that are performed by the cable modem engine. *See* Pet. 21–22 (citing Ex. 1005 ¶ 50). Patent Owner's assertion that "Petitioner simply did not identify the QPSK demodulator as part of the CME" (Sur-reply 31) is not correct.

For these reasons, having carefully considered the fully developed record, we conclude that the Petition has established that Rabenko teaches or suggests that all DOCSIS functions are localized in the cable modem engine.

6. Claim 12: "the DOCSIS MAC processor is an ARM9TDMI-based RISC processor" and "the DOCSIS controller is an ARM940-based RISC processor"

The Petition asserts that one of ordinary skill "would have found it obvious to implement the functions of the DOCSIS MAC processor and DOCSIS controller

using commonly-known and available processors, selected based upon cost, quality of service requirements, geographic impairments, reliability, programmability, interchangeability, and/or any of several other factors for a particular use." Pet. 56–57 (citing Ex. 1002 ¶ 227). Petitioner argues that "Rabenko does not explicitly disclose a ARM9TDMI-based RISC processor for DOCSIS MAC 134/212 or an ARM940-based RISC processor for voice/data processor 136/213," but that "these would have been an obvious design choice as would have been understood by a POSITA." *Id.* at 58. Petitioner contends that it would have been obvious to use "an ARM9TDMI-based RISC processor as taught by Klein and the DOCSIS controller functions of Rabenko using an ARM940-based RISC processor as taught by Kim '678," because they would be useful for "high computing performance at low size, cost and power consumption—demanded by shrinking portable, wireless and internet-connected devices," like Rabenko. *Id.* at 60 (citing Ex. 1016 ¶ 8; Ex. 1002 ¶ 233).

Patent Owner argues that "Petitioner simply fails to point to any DOCSIS MAC processor implemented as an ARM9TDMI-based RISC processor in the art" and "does not provide any evidence of a DOCSIS controller implemented as an ARM940-based RISC processor in the art." PO Resp. 63. Patent Owner further asserts that "[n]othing in Rabenko indicates that using an ARM9TDMI-based RISC processor for the DOCSIS MAC/PHY or an ARM940-based RISC processor for the DOCSIS controller would be an obvious design choice." *Id.* at 63–64. Patent Owner further argues that Klein and Kim '678 are not analogous art because they are in different fields and not reasonably pertinent to the problem the '775 patent seeks to address. *See id.* at 64–65.

The '775 patent only mentions the specific processors in passing, explaining that "[i]n one implementation, processor 114 is an ARM9TDMI-based RISC

processor" and that "[i]n one implementation, controller 116 is an ARM940-based RISC processor." Ex. 1001, 3:16–18, 23–24. There is nothing in the patent to suggest that the choices of these off-the-shelf processors provided any advantage specific to the system described in patent.

We agree with Petitioner that use of these ARM processors would have been an obvious design choice, given that they were known to be useful in applications "that demand the highest levels of performance with small size, low cost, and low power consumption." Ex. 1016 ¶ 8.[5] Put another way, we conclude that claims limiting an otherwise obvious system to off-the-shelf hardware of the type generally suitable for the purpose does not make the subject matter non-obvious. Regarding whether Klein and Kim '678 are analogous art, we find that they are pertinent to the problem confronting the '775 patent inventors who would have been looking for processors suitable for implementation of the invention, and Klein and Kim '678 indicate that these processors would be suitable in applications that, though different, also implicated similar size, cost, and power consumption considerations.

For these reasons, having carefully considered the fully developed record, we conclude that the Petition has established that the combination of Rabenko, Klein, and Kim '678 teaches or suggests use of the claimed ARM processors.

7. Obviousness Conclusion

In view of the prior art and arguments presented in the Petition, and having found Patent Owner's arguments unpersuasive, we conclude that Petitioner has

[5] Notably, Patent Owner does not dispute Petitioner's argument that it would have been an obvious design choice to use a "RISC processor," as recited in claims 1 and 14. *See* Pet. 42–45. The claimed ARM processors are RISC processors.

shown, by a preponderance of the evidence, that claims 1–20 of the ’775 patent are unpatentable.

III. CONCLUSION

For the reasons given, Petitioner has met its burden of showing that claims 1–20 of U.S. Patent 8,223,775 B2 are unpatentable.[6] The results are summarized below:

Claim(s)	35 U.S.C. §	Reference(s)	Claim(s) Shown Unpatentable	Claim(s) Not Shown Unpatentable
1–7, 10, 12, 14, 15, 18–20	103(a)	Rabenko, Gaspar, Kim	1–7, 10, 12, 14, 15, 18–20	
1–7, 10, 12, 14, 15	103(a)	Rabenko, Gaspar, Kim, Lu	1–7, 10, 12, 14, 15	
12	103(a)	Rabenko, Gaspar, Kim, Klein, Kim ’678	12	
8	103(a)	Rabenko, Gaspar, Kim, Koperda	8	

[6] Should Patent Owner wish to pursue amendment of the challenged claims in a reissue or reexamination proceeding, we draw Patent Owner’s attention to the April 2019 *Notice Regarding Options for Amendments by Patent Owner Through Reissue or Reexamination During a Pending AIA Trial Proceeding*. *See* 84 Fed. Reg. 16654 (Apr. 22, 2019). If Patent Owner chooses to file a reissue application or a request for reexamination of the challenged patent, we remind Patent Owner of its continuing obligation to notify the Board of any such related matters in updated mandatory notices. *See* 37 C.F.R. § 42.8(a)(3), (b)(2).

Claim(s)	35 U.S.C. §	Reference(s)	Claim(s) Shown Unpatentable	Claim(s) Not Shown Unpatentable
9	103(a)	Rabenko, Gaspar, Kim, Johnson	9	
11, 13, 16, 17	103(a)	Rabenko, Gaspar, Kim Johnson	11, 13, 16, 17	
Overall Outcome			1–20	

IV. ORDER

Accordingly, it is

ORDERED that Petitioner has shown by a preponderance of the evidence that claims 1–20 of the ’775 patent are unpatentable; and

FURTHER ORDERED that, because this is a Final Written Decision, parties to the proceeding seeking judicial review of the decision must comply with the notice and service requirements of 37 C.F.R. § 90.2.

FOR PETITIONER:

Frederic Meeker
Paul Qualey
John Fleming
Shambhavi Patel
Simon Lasker
BANNER & WITCOFF, LTD
fmeeker@bannerwitcoff.com
pqualey@bannerwitcoff.com
jfleming@bannerwitcoff.com
spatel@bannerwitcoff.com
slasker@bannerwitcoff.com
bwlitdocket@bannerwitcoff.com

FOR PATENT OWNER:

Jason Engel
Erik Halverson
Matthew Blair
K&L GATES LLP
jason.engel.ptab@klgates.com
erik.halverson@klgates.com
matthew.blair@klgates.com

Kenneth Weatherwax
Parham Hendifar
LOWENSTEIN & WEATHERWAX LLP
weatherwax@lowensteinweatherwax.com
hendifar@lowensteinweatherwax.com