US005682419A

# United States Patent [19]

Grube et al.

[11] Patent Number: 5,682,419

[45] Date of Patent: *Oct. 28, 1997

[54] **METHOD AND APPARATUS FOR PROVIDING INFRASTRUCTURE CALL SUPPORT**

[76] Inventors: **Gary W. Grube**, 561 Chateaux Bourne Dr., Barrington, Ill. 60010; **Timothy W. Markison**, 7506 Mifflin Kenedy Terr., Austin, Tex. 78749; **Matthew A. Pendleton**, 503 Bayberry Ct., Cedar Park, Tex. 78613; **Mathew A. Rybicki**, 10201 Kabar Tr., Austin, Tex. 78759

[*] Notice: The term of this patent shall not extend beyond the expiration date of Pat. No. 5,495,483.

[21] Appl. No.: **378,852**

[22] Filed: **Jan. 26, 1995**

[51] **Int. Cl.**[6] ..... **H04Q 7/22**; H04Q 7/24; H04Q 7/38

[52] **U.S. Cl.** ..... **379/60**; 379/58; 379/59; 379/60; 370/77; 370/79; 455/33.1; 455/34.1

[58] **Field of Search** ..... 379/58, 59, 60; 370/77, 79; 455/33.1, 34.1

[56] **References Cited**

U.S. PATENT DOCUMENTS

| | | | |
|---|---|---|---|
| 5,495,483 | 2/1996 | Grube et al. | 370/79 |
| 5,521,906 | 5/1996 | Grube et al. | 370/76 |
| 5,533,008 | 7/1996 | Grube et al. | 370/79 |
| 5,539,777 | 7/1996 | Grube et al. | 370/76 |

OTHER PUBLICATIONS

J.M. Cioffi; "DMT Information Bus for Multidrop Interface on Existing Wiring;" Amati Communications Corporation; pp. 1–6 (Jun. 6, 1994).

T. Starr, et al.; The TIE1.4 Working Group; "Asymmetric Digital Subscriber Line (ADSL) Metallic Interface;" pp. 1–170 (Unpublished).

Cable–Telco Report, "ADSL system backed by Northern Telecom offers capabilities extending well beyond the 1.5 mbps video rate claimed for other copper techniques" Apr. 1993.

*Primary Examiner*—Dwayne Bost
*Assistant Examiner*—Nay Maung
*Attorney, Agent, or Firm*—Daniel C. Crilly

[57] **ABSTRACT**

In a communication system that employs DMT technology to couple a primary site (**102**) to a plurality of secondary sites (**104–108**), call support infrastructure is obtained as follows. Having received a call request, the primary site (**102**) identifies targeted subscribers and target secondary sites, i.e., the secondary sites having a targeted subscriber affiliated therewith. Next, the primary site determines a call bit loading table from the site bit loading tables of the target secondary sites. Having done this, the primary site selects, based on bandwidth requirements of the call, at least one carrier channel to provide the infrastructure support for the call.

**24 Claims, 49 Drawing Sheets**

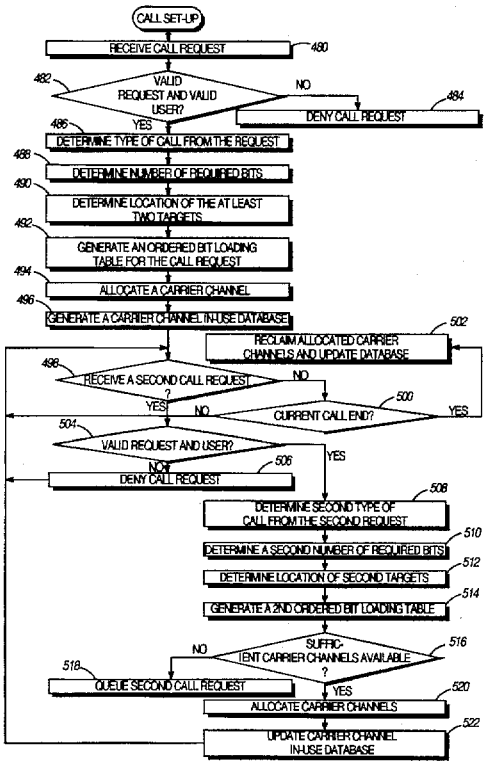




Comcast, Ex. 1009

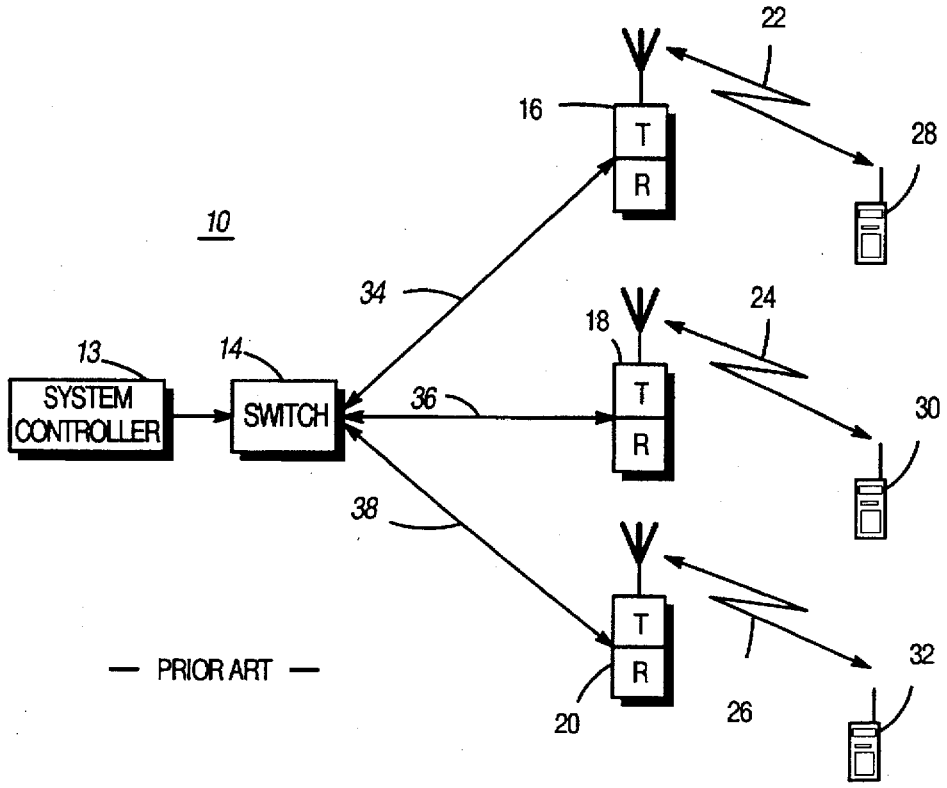
22
16
T
R
28
10
34
24
18
13
14
SYSTEM CONTROLLER
SWITCH
36
T
R
30
38
T
R
32
— PRIOR ART —
20
26

FIG.1

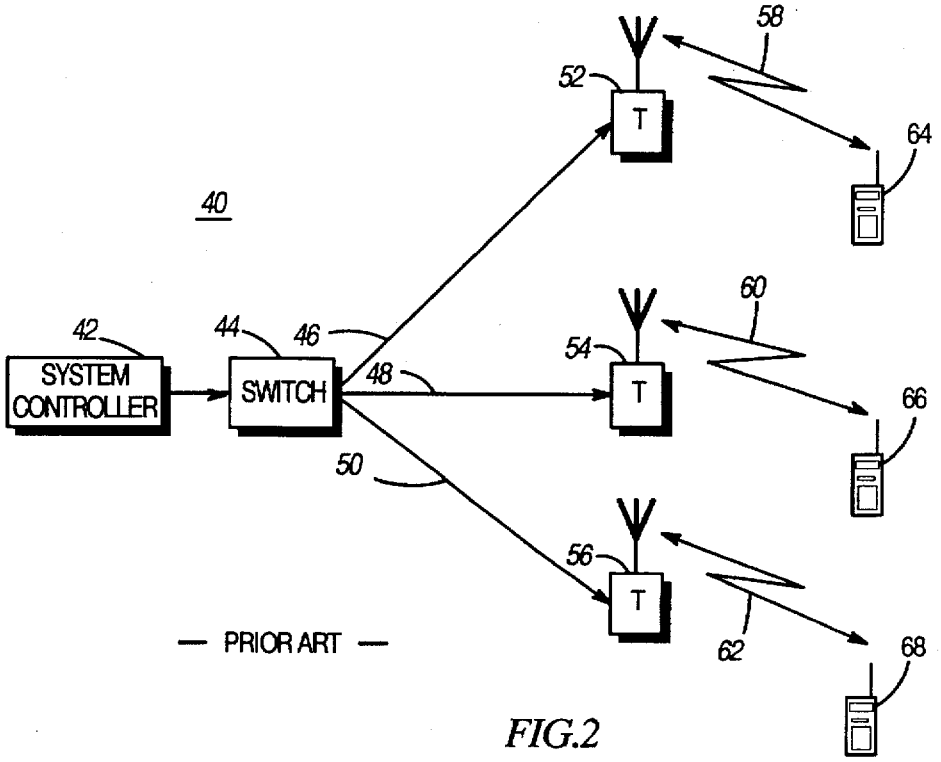
58
52
T
64
40
60
42
44
46
54
SYSTEM CONTROLLER
SWITCH
48
T
66
50
56
T
— PRIOR ART —
62
68

FIG.2

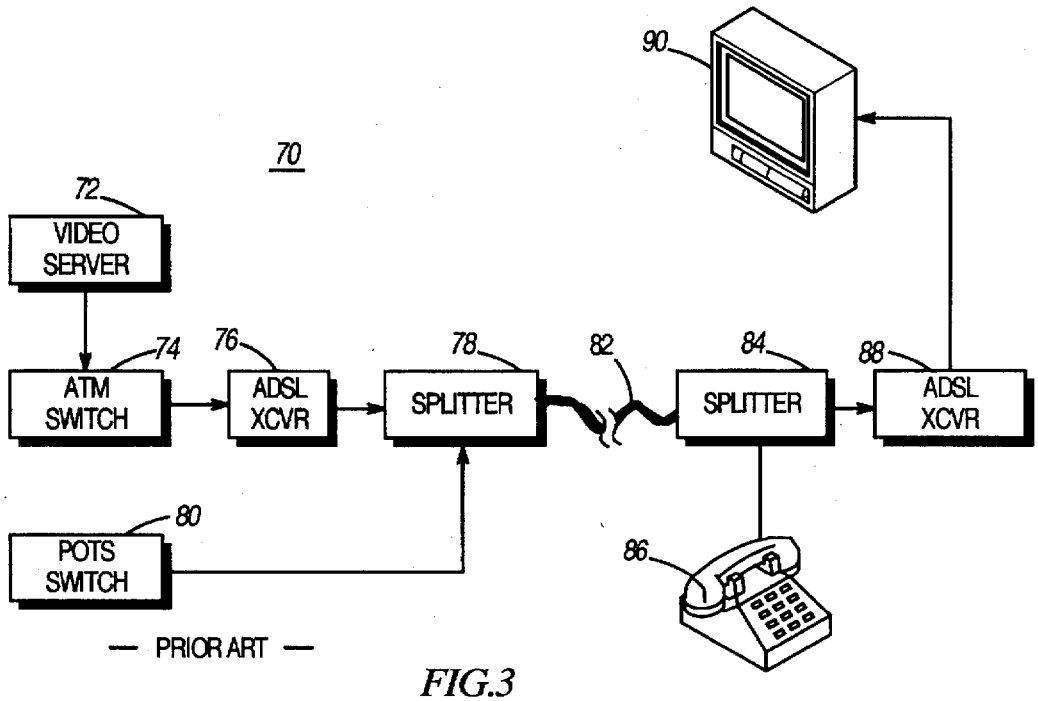


— PRIOR ART —

FIG.3

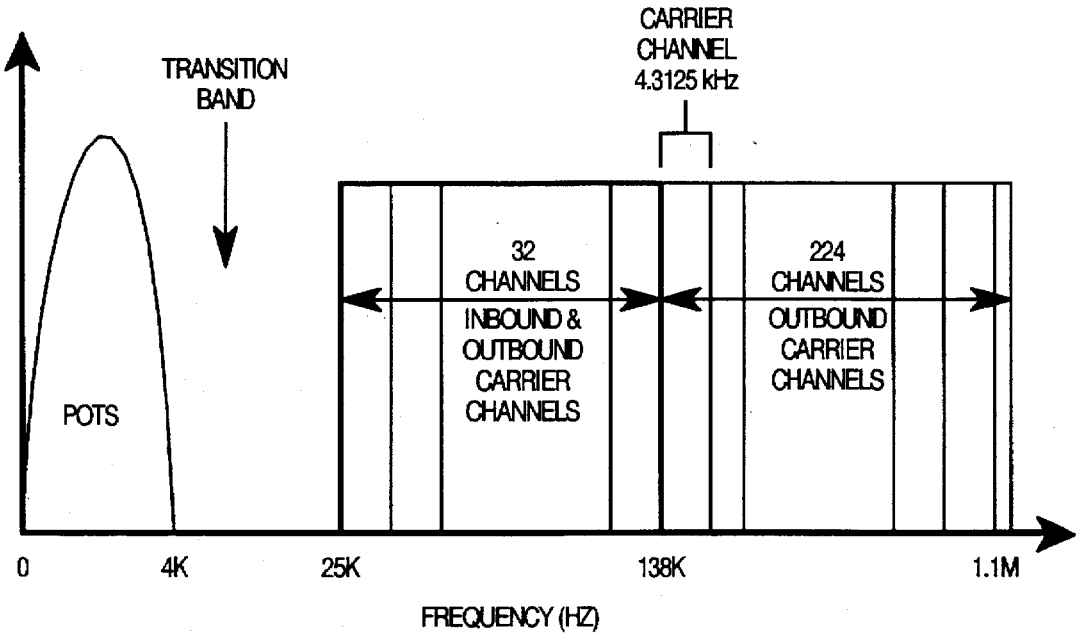


— PRIOR ART —

FIG.4

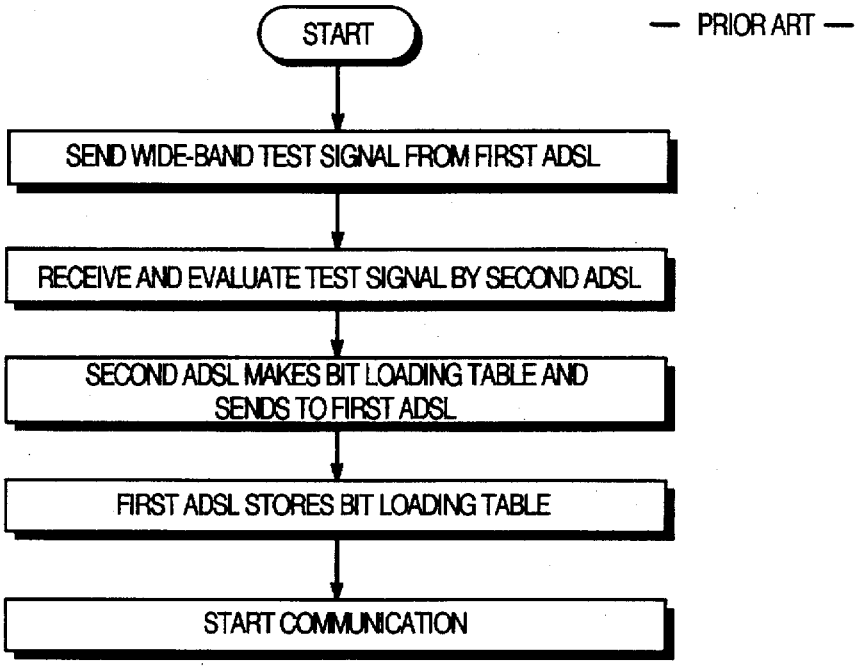
— PRIOR ART —
START
SEND WIDE-BAND TEST SIGNAL FROM FIRST ADSL
RECEIVE AND EVALUATE TEST SIGNAL BY SECOND ADSL
SECOND ADSL MAKES BIT LOADING TABLE AND SENDS TO FIRST ADSL
FIRST ADSL STORES BIT LOADING TABLE
START COMMUNICATION

*FIG.5*

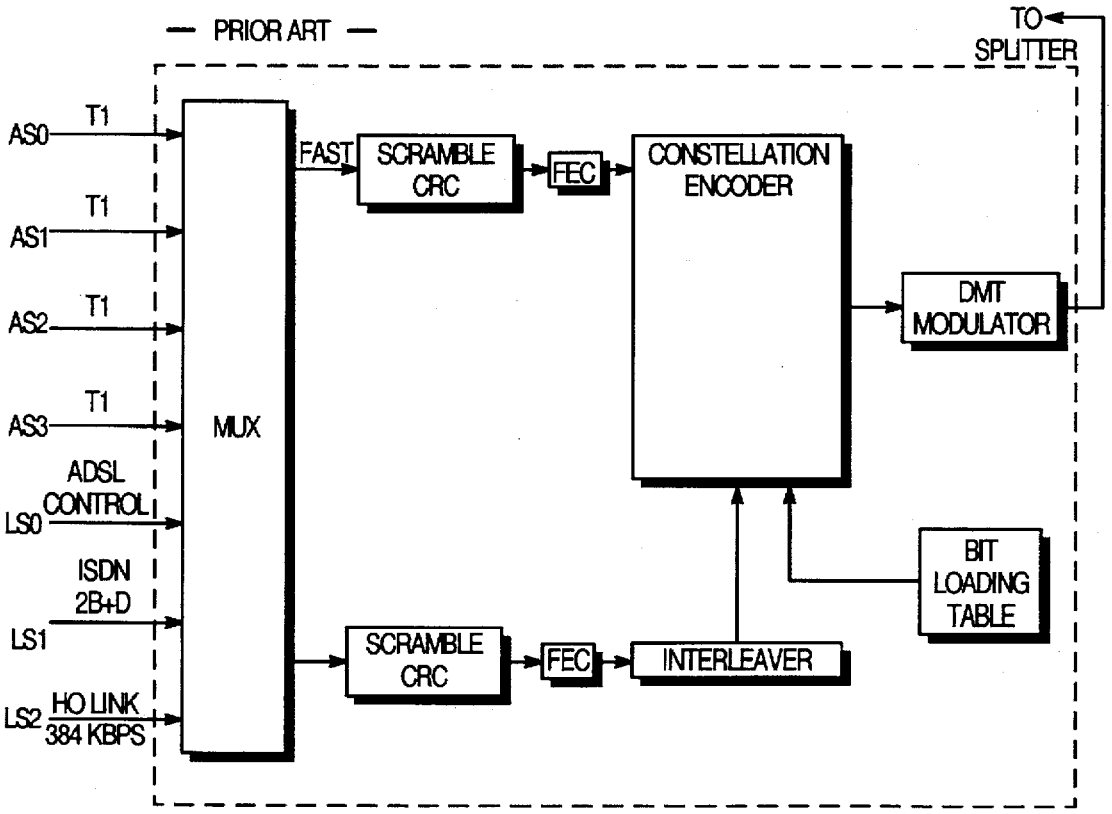
— PRIOR ART —
TO SPLITTER
AS0
T1
AS1
T1
AS2
T1
AS3
T1
ADSL CONTROL
LS0
ISDN 2B+D
LS1
HO LINK 384 KBPS
LS2
MUX
FAST
SCRAMBLE CRC
FEC
CONSTELLATION ENCODER
DMT MODULATOR
BIT LOADING TABLE
SCRAMBLE CRC
FEC
INTERLEAVER

*FIG.6*

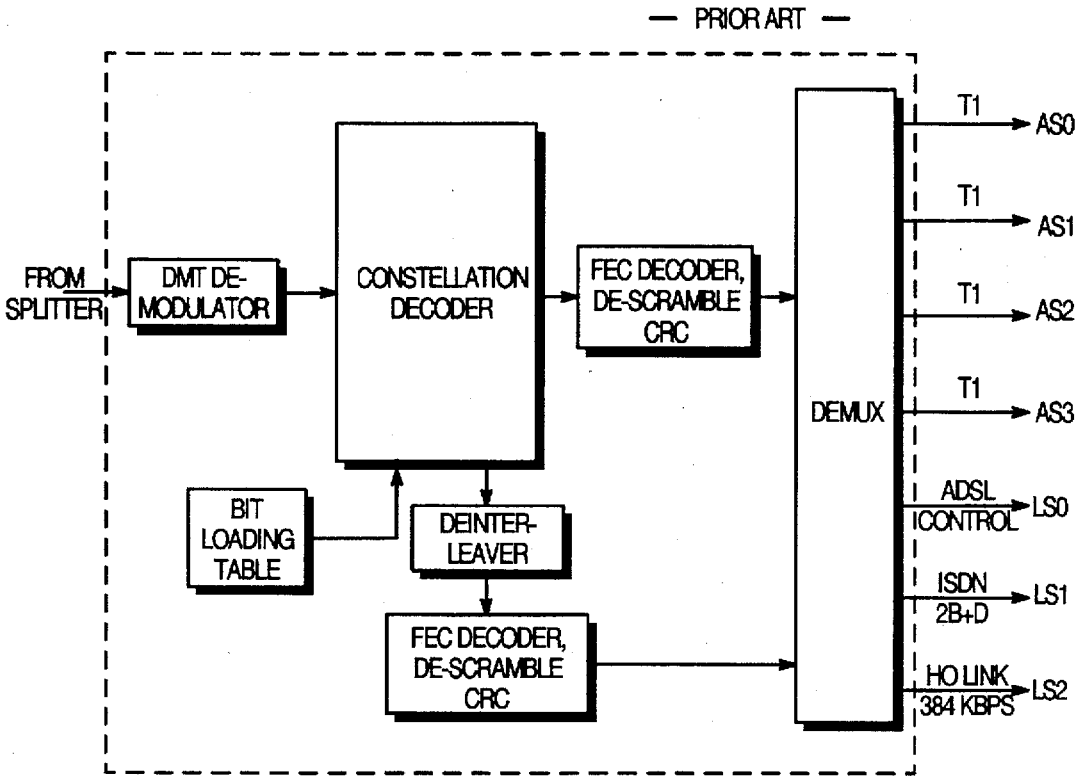
— PRIOR ART —
FROM SPLITTER
DMT DE-MODULATOR
CONSTELLATION DECODER
FEC DECODER, DE-SCRAMBLE CRC
DEMUX
T1
AS0
T1
AS1
T1
AS2
T1
AS3
ADSL CONTROL
LS0
ISDN 2B+D
LS1
HO LINK 384 KBPS
LS2
BIT LOADING TABLE
DEINTER-LEAVER
FEC DECODER, DE-SCRAMBLE CRC

*FIG.7*

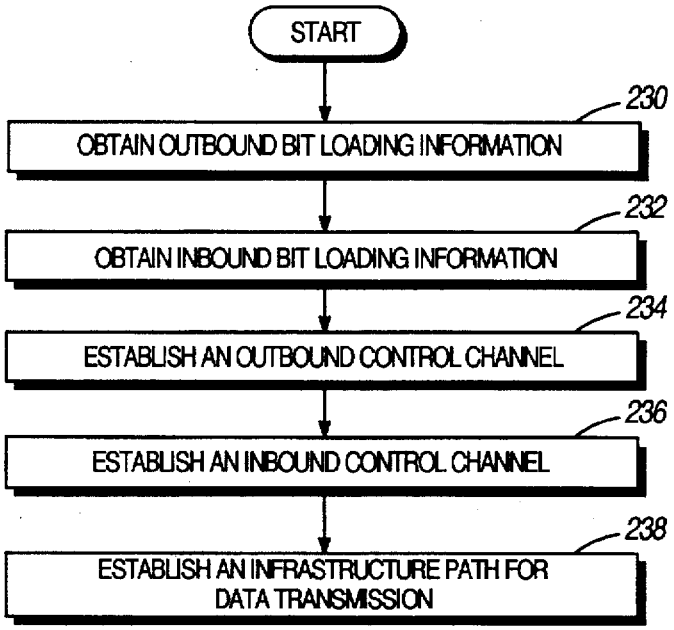
START
230
OBTAIN OUTBOUND BIT LOADING INFORMATION
232
OBTAIN INBOUND BIT LOADING INFORMATION
234
ESTABLISH AN OUTBOUND CONTROL CHANNEL
236
ESTABLISH AN INBOUND CONTROL CHANNEL
238
ESTABLISH AN INFRASTRUCTURE PATH FOR DATA TRANSMISSION

*FIG.12*

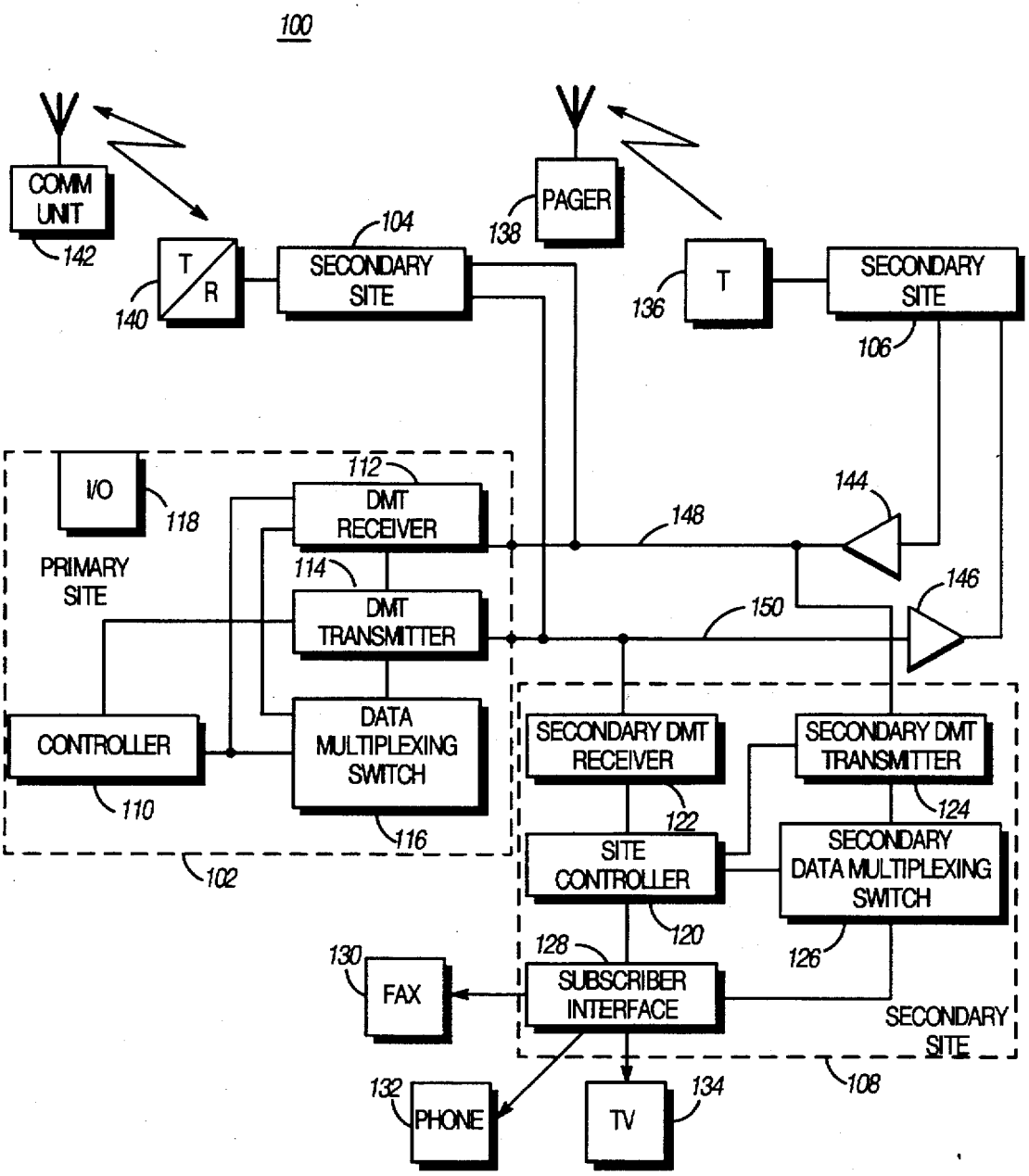
100
COMM UNIT
142
T
R
140
SECONDARY SITE
104
PAGER
138
T
136
SECONDARY SITE
106
I/O
118
PRIMARY SITE
112
DMT RECEIVER
114
DMT TRANSMITTER
DATA MULTIPLEXING SWITCH
116
CONTROLLER
110
102
148
150
144
146
SECONDARY DMT RECEIVER
122
SECONDARY DMT TRANSMITTER
124
SITE CONTROLLER
120
SECONDARY DATA MULTIPLEXING SWITCH
126
128
SUBSCRIBER INTERFACE
130
FAX
132
PHONE
TV
134
SECONDARY SITE
108

*FIG.8*

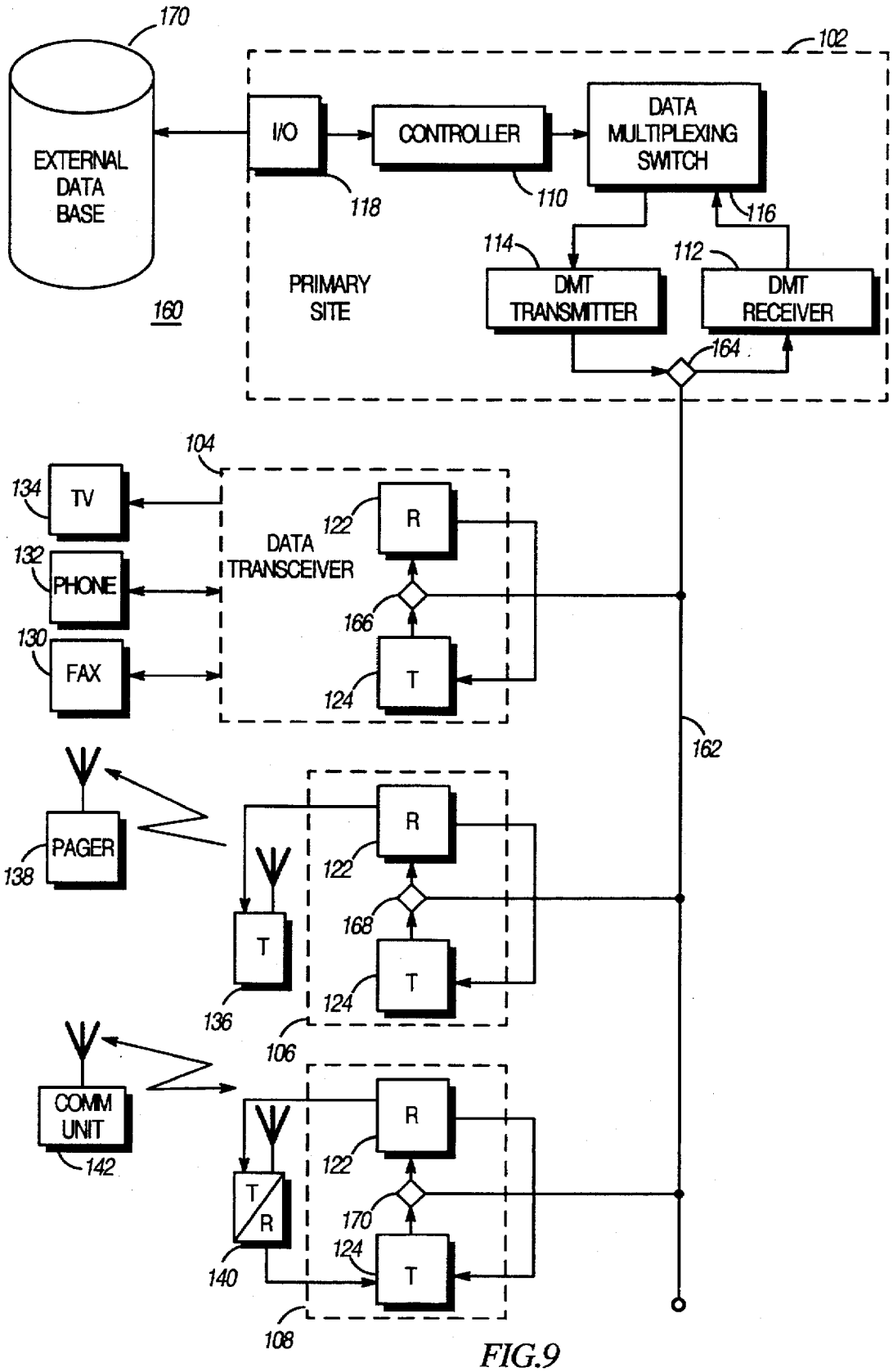
170
EXTERNAL DATA BASE
160
102
I/O
118
CONTROLLER
110
DATA MULTIPLEXING SWITCH
116
114
112
PRIMARY SITE
DMT TRANSMITTER
DMT RECEIVER
164
104
134
TV
132
PHONE
130
FAX
DATA TRANSCEIVER
122
R
166
T
124
162
PAGER
138
R
122
168
T
124
T
136
106
COMM UNIT
142
R
122
T/R
170
124
T
140
108

FIG.9

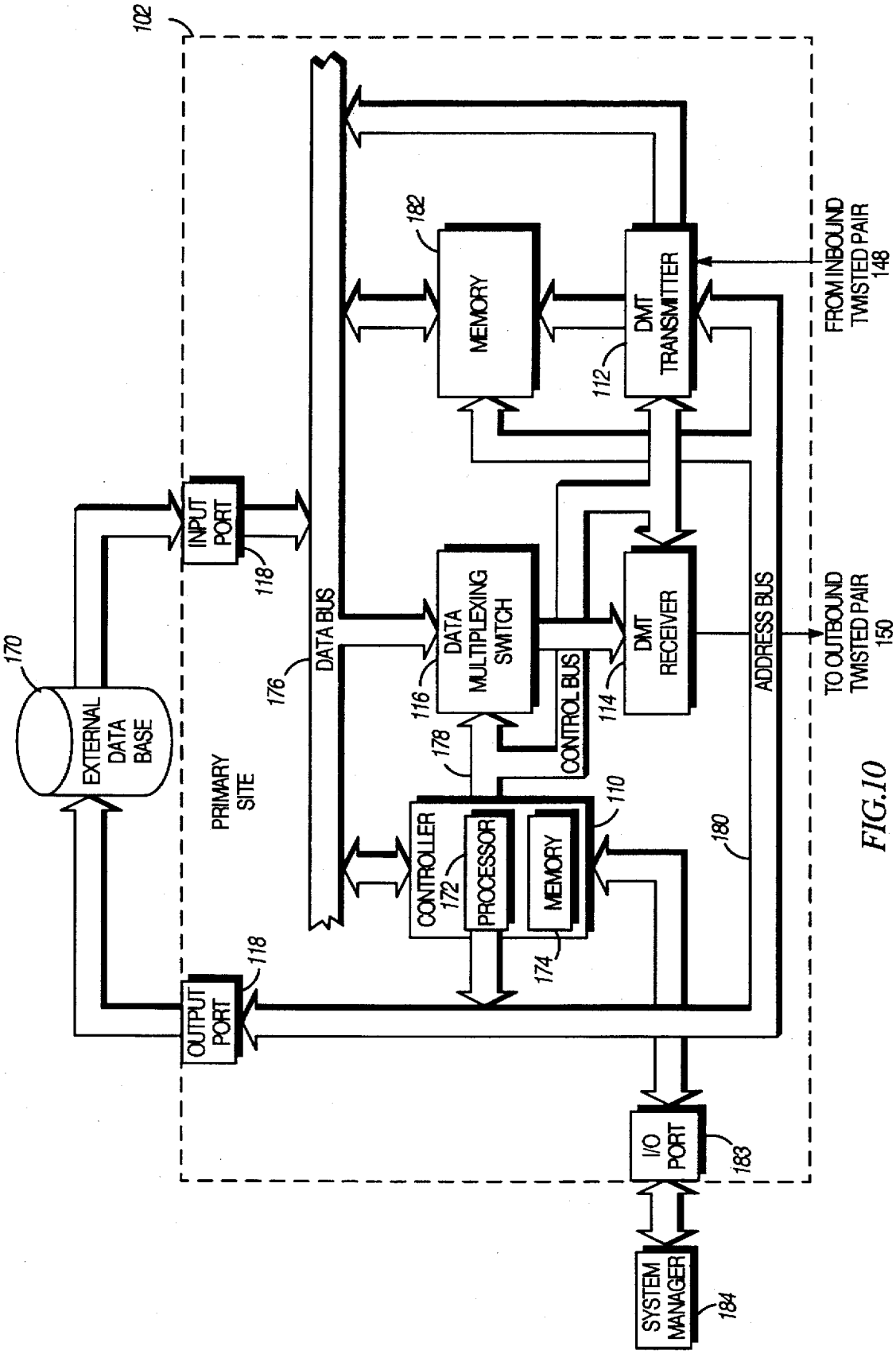
102
170
EXTERNAL DATA BASE
PRIMARY SITE
INPUT PORT
118
OUTPUT PORT
118
176
DATA BUS
182
MEMORY
DATA MULTIPLEXING SWITCH
116
178
CONTROLLER
172
PROCESSOR
MEMORY
174
110
CONTROL BUS
DMT TRANSMITTER
112
DMT RECEIVER
114
ADDRESS BUS
180
FROM INBOUND TWISTED PAIR 148
TO OUTBOUND TWISTED PAIR 150
I/O PORT
183
SYSTEM MANAGER
184

FIG.10

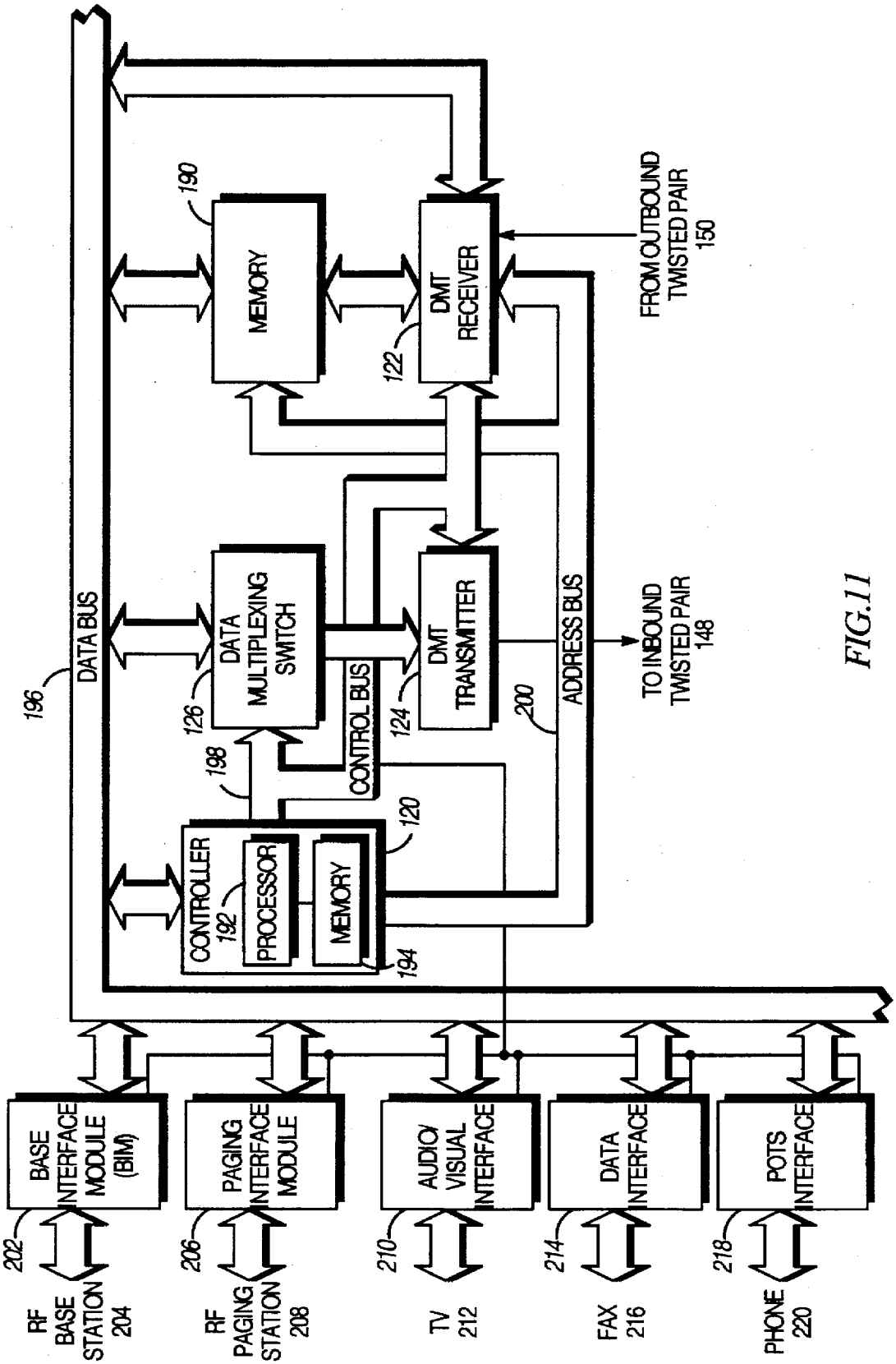
MEMORY
190
DMT RECEIVER
122
FROM OUTBOUND TWISTED PAIR 150
DATA BUS
196
DATA MULTIPLEXING SWITCH
126
DMT TRANSMITTER
124
CONTROL BUS
ADDRESS BUS
200
TO INBOUND TWISTED PAIR 148
198
CONTROLLER 192
PROCESSOR
MEMORY
194
120
BASE INTERFACE MODULE (BIM)
202
RF BASE STATION 204
PAGING INTERFACE MODULE
206
RF PAGING STATION 208
AUDIO/ VISUAL INTERFACE
210
TV 212
DATA INTERFACE
214
FAX 216
POTS INTERFACE
218
PHONE 220

FIG.11

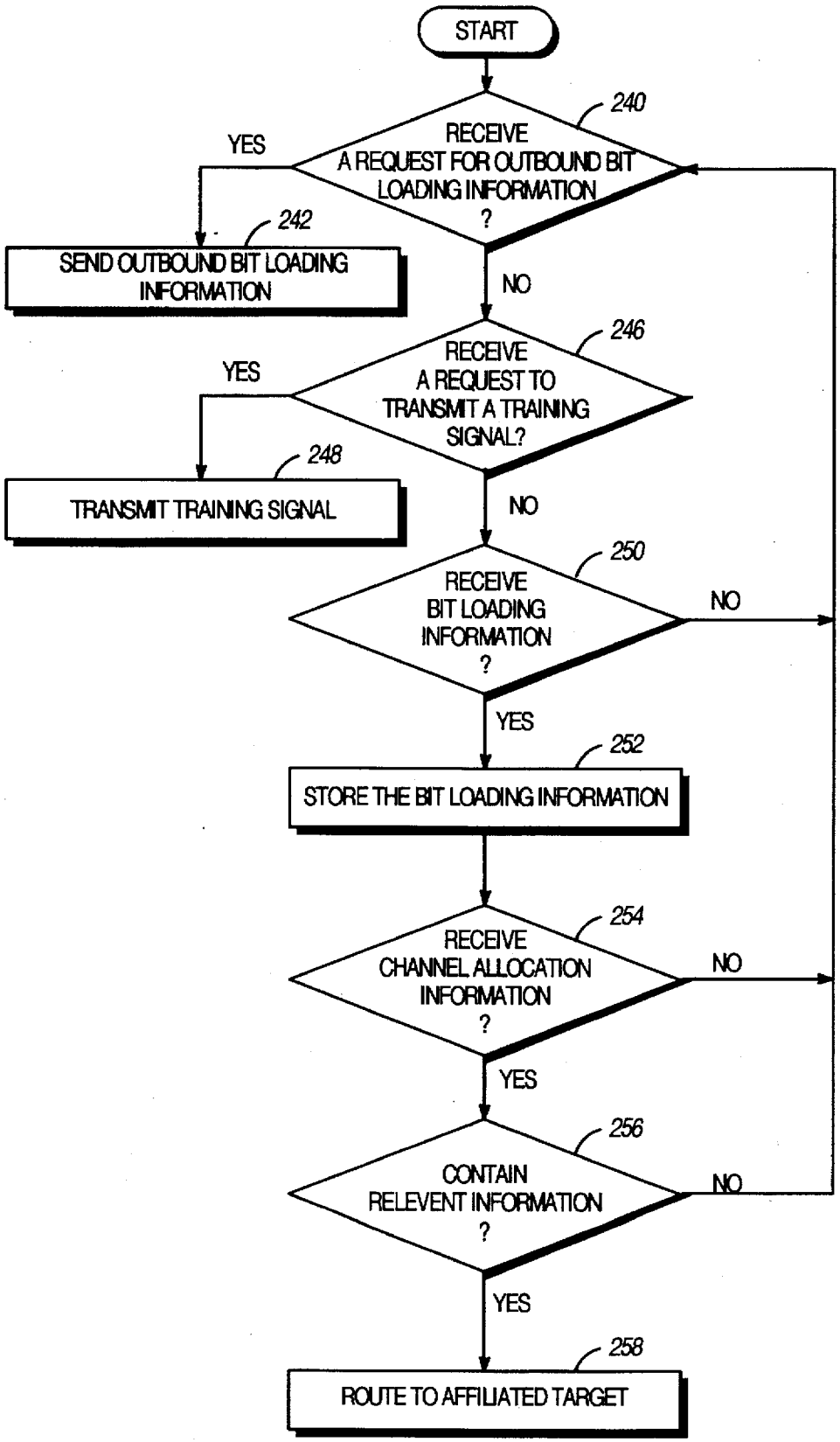
START
240
RECEIVE A REQUEST FOR OUTBOUND BIT LOADING INFORMATION ?
YES
242
SEND OUTBOUND BIT LOADING INFORMATION
NO
246
RECEIVE A REQUEST TO TRANSMIT A TRAINING SIGNAL?
YES
248
TRANSMIT TRAINING SIGNAL
NO
250
RECEIVE BIT LOADING INFORMATION ?
NO
YES
252
STORE THE BIT LOADING INFORMATION
254
RECEIVE CHANNEL ALLOCATION INFORMATION ?
NO
YES
256
CONTAIN RELEVENT INFORMATION ?
NO
YES
258
ROUTE TO AFFILIATED TARGET

*FIG.13*

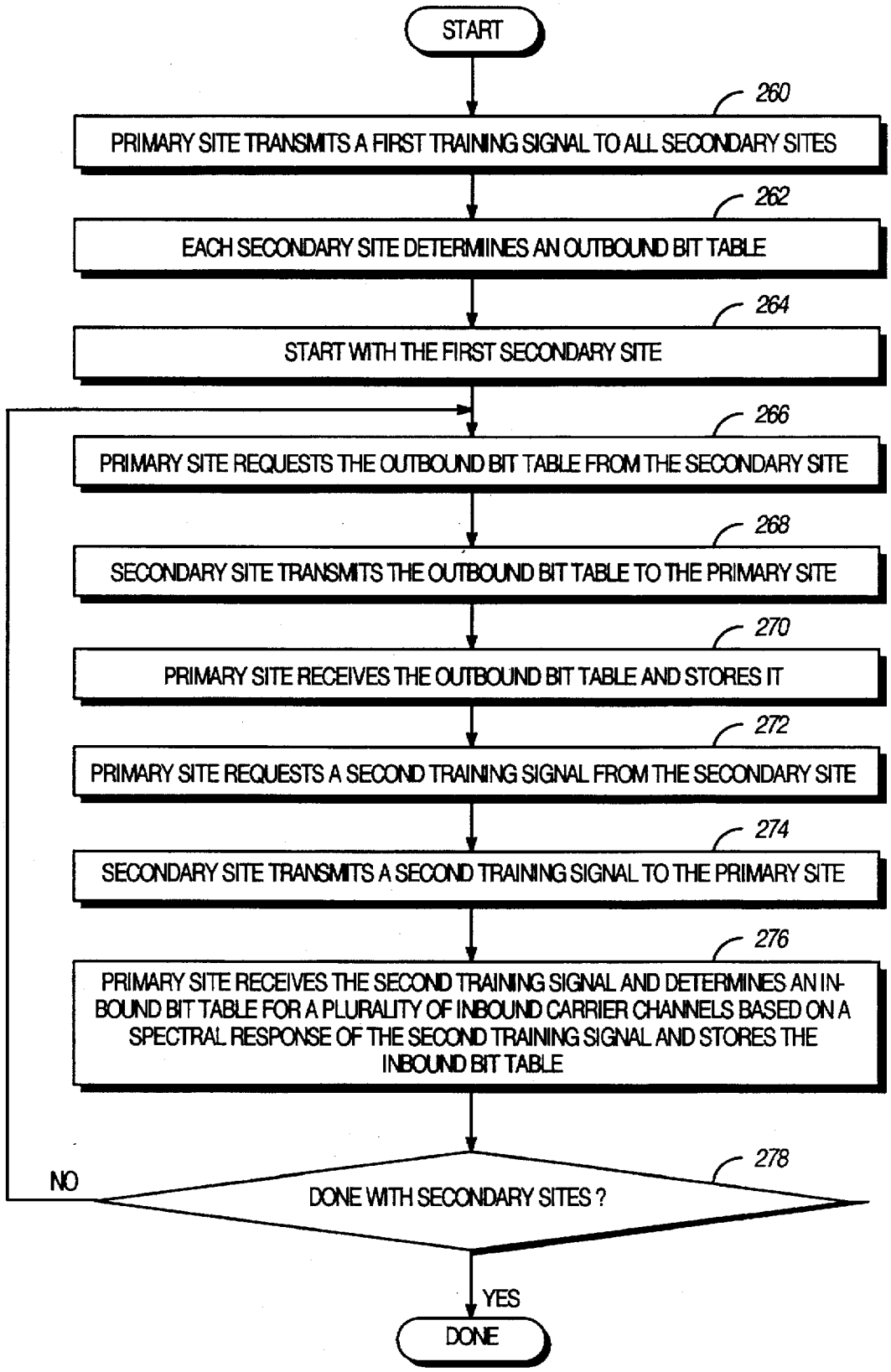
START
260
PRIMARY SITE TRANSMITS A FIRST TRAINING SIGNAL TO ALL SECONDARY SITES
262
EACH SECONDARY SITE DETERMINES AN OUTBOUND BIT TABLE
264
START WITH THE FIRST SECONDARY SITE
266
PRIMARY SITE REQUESTS THE OUTBOUND BIT TABLE FROM THE SECONDARY SITE
268
SECONDARY SITE TRANSMITS THE OUTBOUND BIT TABLE TO THE PRIMARY SITE
270
PRIMARY SITE RECEIVES THE OUTBOUND BIT TABLE AND STORES IT
272
PRIMARY SITE REQUESTS A SECOND TRAINING SIGNAL FROM THE SECONDARY SITE
274
SECONDARY SITE TRANSMITS A SECOND TRAINING SIGNAL TO THE PRIMARY SITE
276
PRIMARY SITE RECEIVES THE SECOND TRAINING SIGNAL AND DETERMINES AN IN-BOUND BIT TABLE FOR A PLURALITY OF INBOUND CARRIER CHANNELS BASED ON A SPECTRAL RESPONSE OF THE SECOND TRAINING SIGNAL AND STORES THE INBOUND BIT TABLE
278
NO
DONE WITH SECONDARY SITES ?
YES
DONE

*FIG.14*

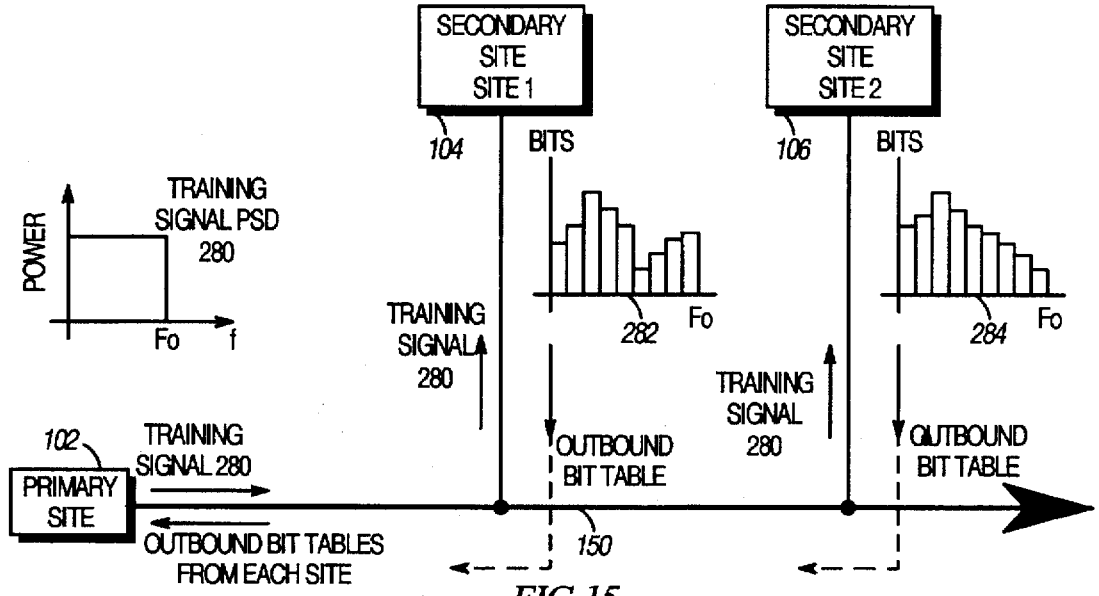


FIG.15

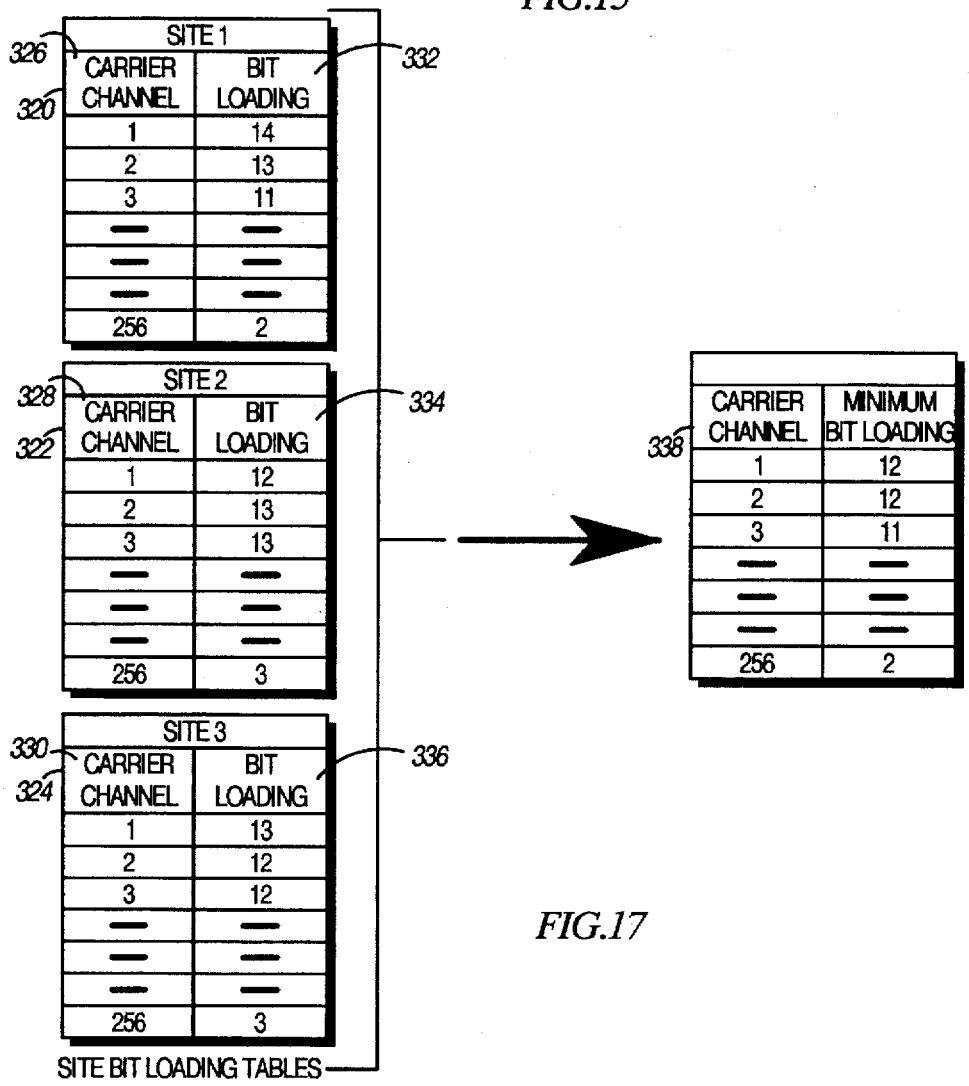

SITE 1 (326, 320, 332)

| CARRIER CHANNEL | BIT LOADING |
|---|---|
| 1 | 14 |
| 2 | 13 |
| 3 | 11 |
| — | — |
| — | — |
| — | — |
| 256 | 2 |

SITE 2 (328, 322, 334)

| CARRIER CHANNEL | BIT LOADING |
|---|---|
| 1 | 12 |
| 2 | 13 |
| 3 | 13 |
| — | — |
| — | — |
| — | — |
| 256 | 3 |

SITE 3 (330, 324, 336)

| CARRIER CHANNEL | BIT LOADING |
|---|---|
| 1 | 13 |
| 2 | 12 |
| 3 | 12 |
| — | — |
| — | — |
| — | — |
| 256 | 3 |

SITE BIT LOADING TABLES

(338)

| CARRIER CHANNEL | MINIMUM BIT LOADING |
|---|---|
| 1 | 12 |
| 2 | 12 |
| 3 | 11 |
| — | — |
| — | — |
| — | — |
| 256 | 2 |

FIG.17

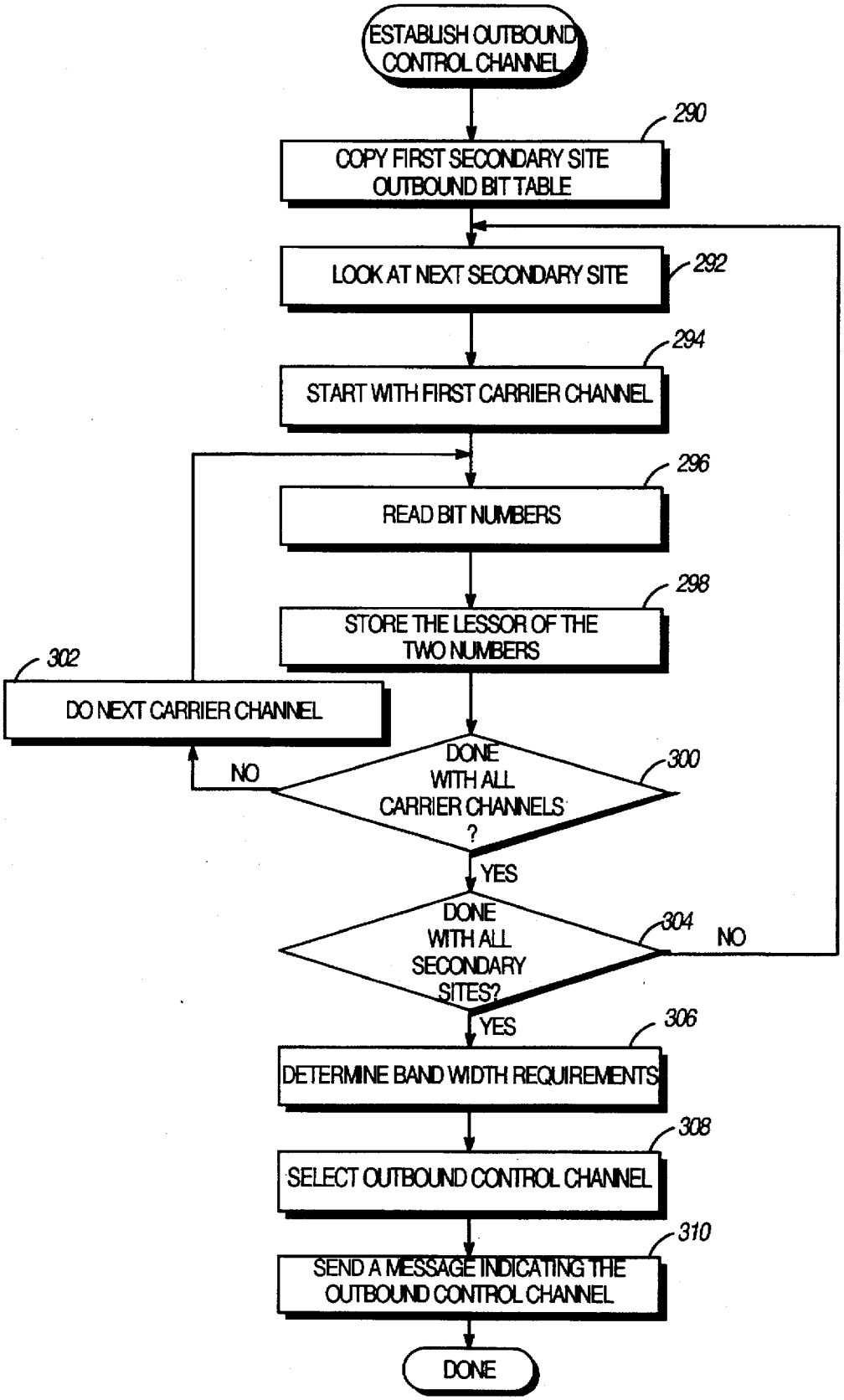
ESTABLISH OUTBOUND CONTROL CHANNEL
290
COPY FIRST SECONDARY SITE OUTBOUND BIT TABLE
LOOK AT NEXT SECONDARY SITE
292
294
START WITH FIRST CARRIER CHANNEL
296
READ BIT NUMBERS
298
STORE THE LESSOR OF THE TWO NUMBERS
302
DO NEXT CARRIER CHANNEL
NO
DONE WITH ALL CARRIER CHANNELS ?
300
YES
DONE WITH ALL SECONDARY SITES?
304
NO
YES
306
DETERMINE BAND WIDTH REQUIREMENTS
308
SELECT OUTBOUND CONTROL CHANNEL
310
SEND A MESSAGE INDICATING THE OUTBOUND CONTROL CHANNEL
DONE

FIG.16

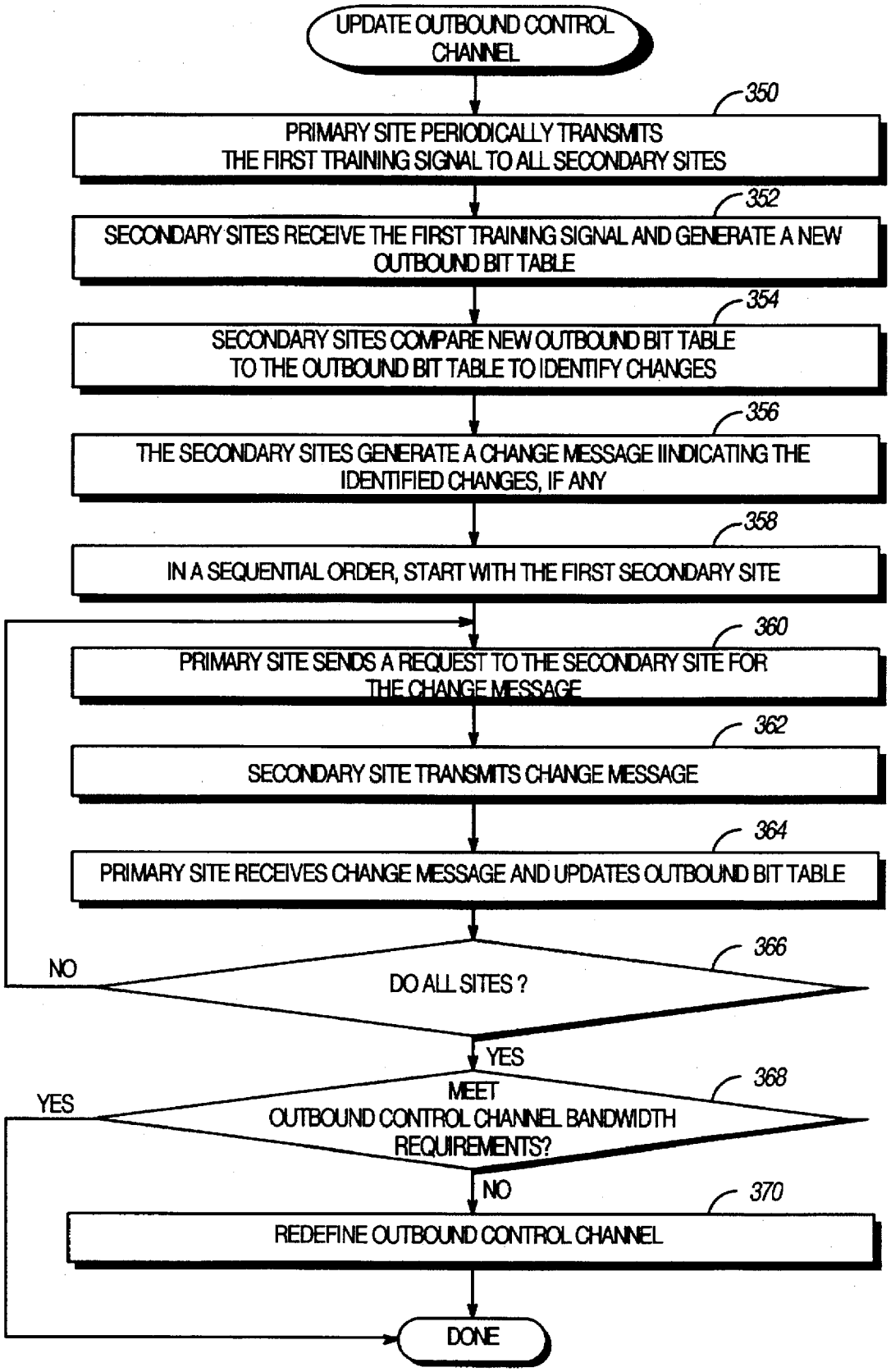
UPDATE OUTBOUND CONTROL CHANNEL
350
PRIMARY SITE PERIODICALLY TRANSMITS THE FIRST TRAINING SIGNAL TO ALL SECONDARY SITES
352
SECONDARY SITES RECEIVE THE FIRST TRAINING SIGNAL AND GENERATE A NEW OUTBOUND BIT TABLE
354
SECONDARY SITES COMPARE NEW OUTBOUND BIT TABLE TO THE OUTBOUND BIT TABLE TO IDENTIFY CHANGES
356
THE SECONDARY SITES GENERATE A CHANGE MESSAGE IINDICATING THE IDENTIFIED CHANGES, IF ANY
358
IN A SEQUENTIAL ORDER, START WITH THE FIRST SECONDARY SITE
360
PRIMARY SITE SENDS A REQUEST TO THE SECONDARY SITE FOR THE CHANGE MESSAGE
362
SECONDARY SITE TRANSMITS CHANGE MESSAGE
364
PRIMARY SITE RECEIVES CHANGE MESSAGE AND UPDATES OUTBOUND BIT TABLE
366
DO ALL SITES ?
NO
YES
368
MEET OUTBOUND CONTROL CHANNEL BANDWIDTH REQUIREMENTS?
YES
NO
370
REDEFINE OUTBOUND CONTROL CHANNEL
DONE

FIG.18

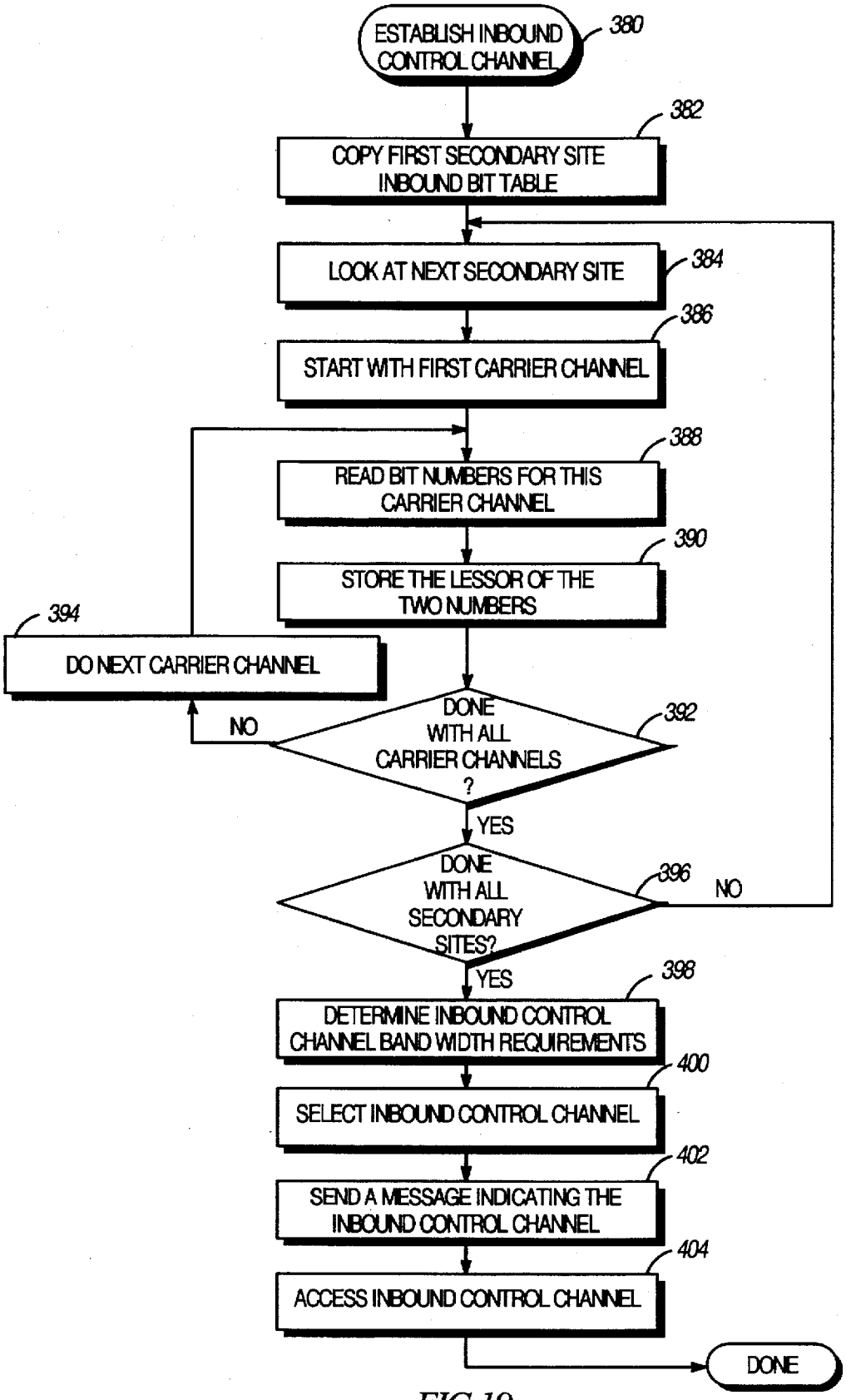
ESTABLISH INBOUND CONTROL CHANNEL
380
COPY FIRST SECONDARY SITE INBOUND BIT TABLE
382
LOOK AT NEXT SECONDARY SITE
384
START WITH FIRST CARRIER CHANNEL
386
READ BIT NUMBERS FOR THIS CARRIER CHANNEL
388
STORE THE LESSOR OF THE TWO NUMBERS
390
DO NEXT CARRIER CHANNEL
394
DONE WITH ALL CARRIER CHANNELS ?
392
NO
YES
DONE WITH ALL SECONDARY SITES?
396
NO
YES
DETERMINE INBOUND CONTROL CHANNEL BAND WIDTH REQUIREMENTS
398
SELECT INBOUND CONTROL CHANNEL
400
SEND A MESSAGE INDICATING THE INBOUND CONTROL CHANNEL
402
ACCESS INBOUND CONTROL CHANNEL
404
DONE

FIG.19

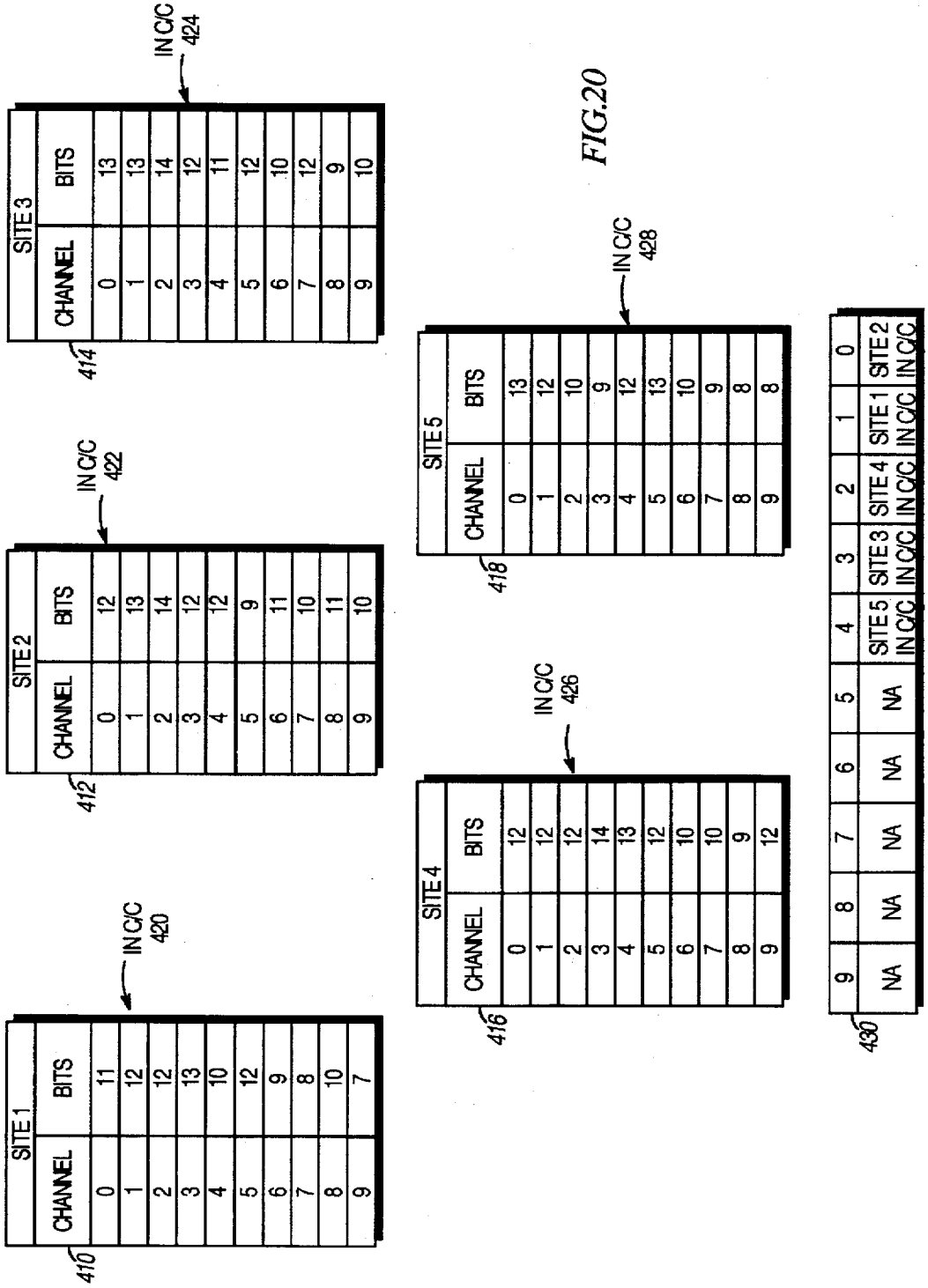
SITE 1
CHANNEL
BITS
410
IN C/C 420
SITE 2
CHANNEL
BITS
412
IN C/C 422
SITE 3
CHANNEL
BITS
414
IN C/C 424
SITE 4
CHANNEL
BITS
416
IN C/C 426
SITE 5
CHANNEL
BITS
418
IN C/C 428
SITE 1 IN C/C
SITE 2 IN C/C
SITE 3 IN C/C
SITE 4 IN C/C
SITE 5 IN C/C
NA
430

FIG.20

434

| SET "A" | |
|---|---|
| CHANNEL | BITS |
| 0 | 11 |
| 1 | 12 |
| 2 | 12 |
| 3 | 12 |
| 4 | 10 |
| 5 | 9 |
| 6 | 9 |
| 7 | 8 |
| 8 | 9 |
| 9 | 7 |

IN C/C "A" 438

436

| SET "B" | |
|---|---|
| CHANNEL | BITS |
| 0 | 12 |
| 1 | 12 |
| 2 | 10 |
| 3 | 9 |
| 4 | 12 |
| 5 | 12 |
| 6 | 10 |
| 7 | 9 |
| 8 | 8 |
| 9 | 8 |

IN C/C "B" 440

442

| 3 | 2 | 1 | 0 |
|---|---|---|---|
| NA | NA | IN C/C SET A SITE 1 | IN C/C SET B SITE 4 |

444

| 3 | 2 | 1 | 0 |
|---|---|---|---|
| NA | NA | IN C/C SET A SITE 2 | IN C/C SET B SITE 5 |

446

| 3 | 2 | 1 | 0 |
|---|---|---|---|
| NA | NA | IN C/C SET A SITE 3 | IN C/C SET B SITE 4 |

448

| 3 | 2 | 1 | 0 |
|---|---|---|---|
| NA | NA | IN C/C SET A SITE 1 | IN C/C SET B SITE 5 |

*FIG.21*

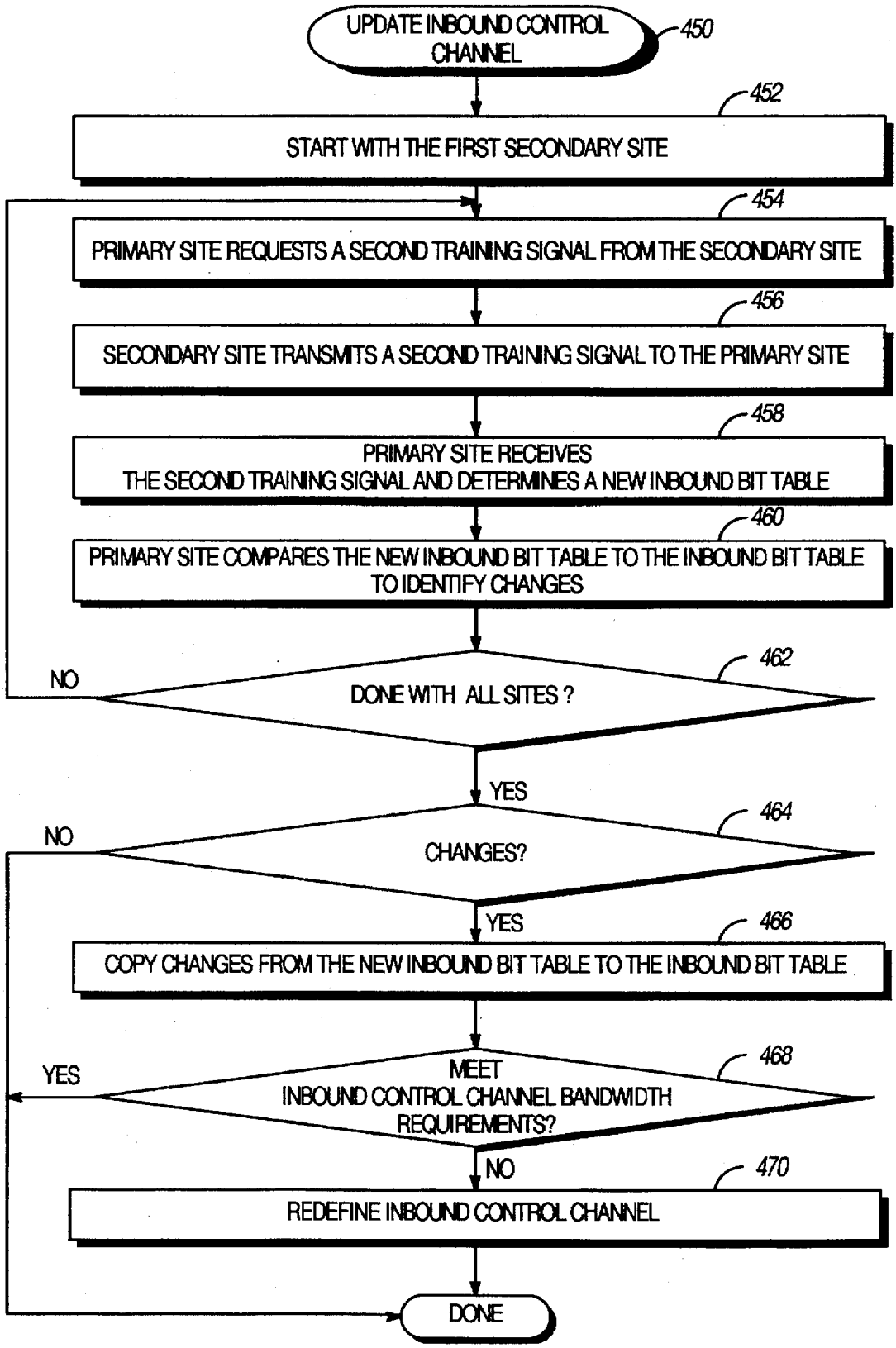
UPDATE INBOUND CONTROL CHANNEL
450
452
START WITH THE FIRST SECONDARY SITE
454
PRIMARY SITE REQUESTS A SECOND TRAINING SIGNAL FROM THE SECONDARY SITE
456
SECONDARY SITE TRANSMITS A SECOND TRAINING SIGNAL TO THE PRIMARY SITE
458
PRIMARY SITE RECEIVES THE SECOND TRAINING SIGNAL AND DETERMINES A NEW INBOUND BIT TABLE
460
PRIMARY SITE COMPARES THE NEW INBOUND BIT TABLE TO THE INBOUND BIT TABLE TO IDENTIFY CHANGES
462
DONE WITH ALL SITES ?
NO
YES
464
CHANGES?
NO
YES
466
COPY CHANGES FROM THE NEW INBOUND BIT TABLE TO THE INBOUND BIT TABLE
468
MEET INBOUND CONTROL CHANNEL BANDWIDTH REQUIREMENTS?
YES
NO
470
REDEFINE INBOUND CONTROL CHANNEL
DONE

*FIG.22*

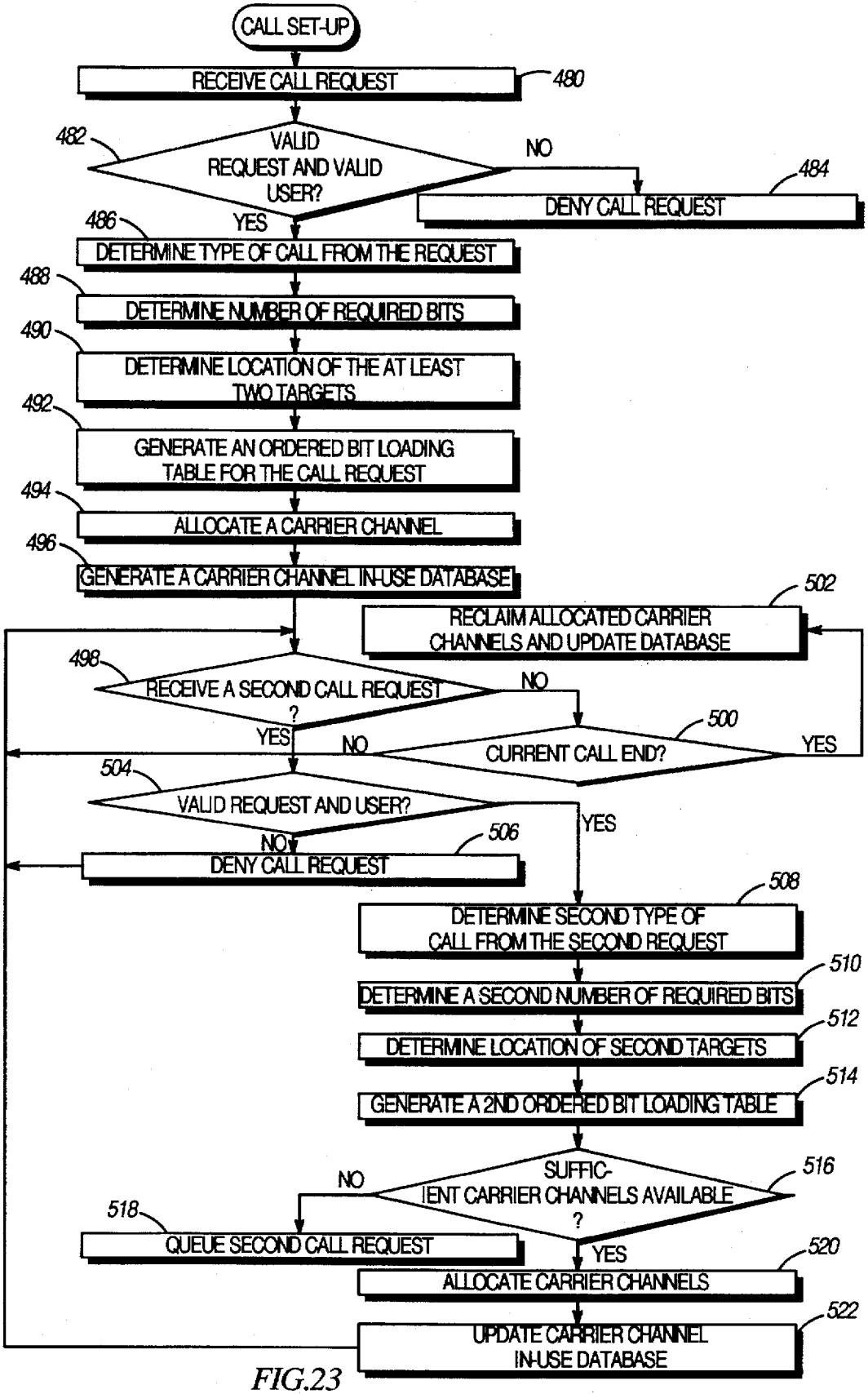
CALL SET-UP
RECEIVE CALL REQUEST
480
482
VALID REQUEST AND VALID USER?
NO
484
DENY CALL REQUEST
YES
486
DETERMINE TYPE OF CALL FROM THE REQUEST
488
DETERMINE NUMBER OF REQUIRED BITS
490
DETERMINE LOCATION OF THE AT LEAST TWO TARGETS
492
GENERATE AN ORDERED BIT LOADING TABLE FOR THE CALL REQUEST
494
ALLOCATE A CARRIER CHANNEL
496
GENERATE A CARRIER CHANNEL IN-USE DATABASE
502
RECLAIM ALLOCATED CARRIER CHANNELS AND UPDATE DATABASE
498
RECEIVE A SECOND CALL REQUEST ?
NO
YES
500
CURRENT CALL END?
NO
YES
504
VALID REQUEST AND USER?
YES
NO
506
DENY CALL REQUEST
508
DETERMINE SECOND TYPE OF CALL FROM THE SECOND REQUEST
510
DETERMINE A SECOND NUMBER OF REQUIRED BITS
512
DETERMINE LOCATION OF SECOND TARGETS
514
GENERATE A 2ND ORDERED BIT LOADING TABLE
516
SUFFICIENT CARRIER CHANNELS AVAILABLE ?
NO
518
QUEUE SECOND CALL REQUEST
YES
520
ALLOCATE CARRIER CHANNELS
522
UPDATE CARRIER CHANNEL IN-USE DATABASE

FIG.23

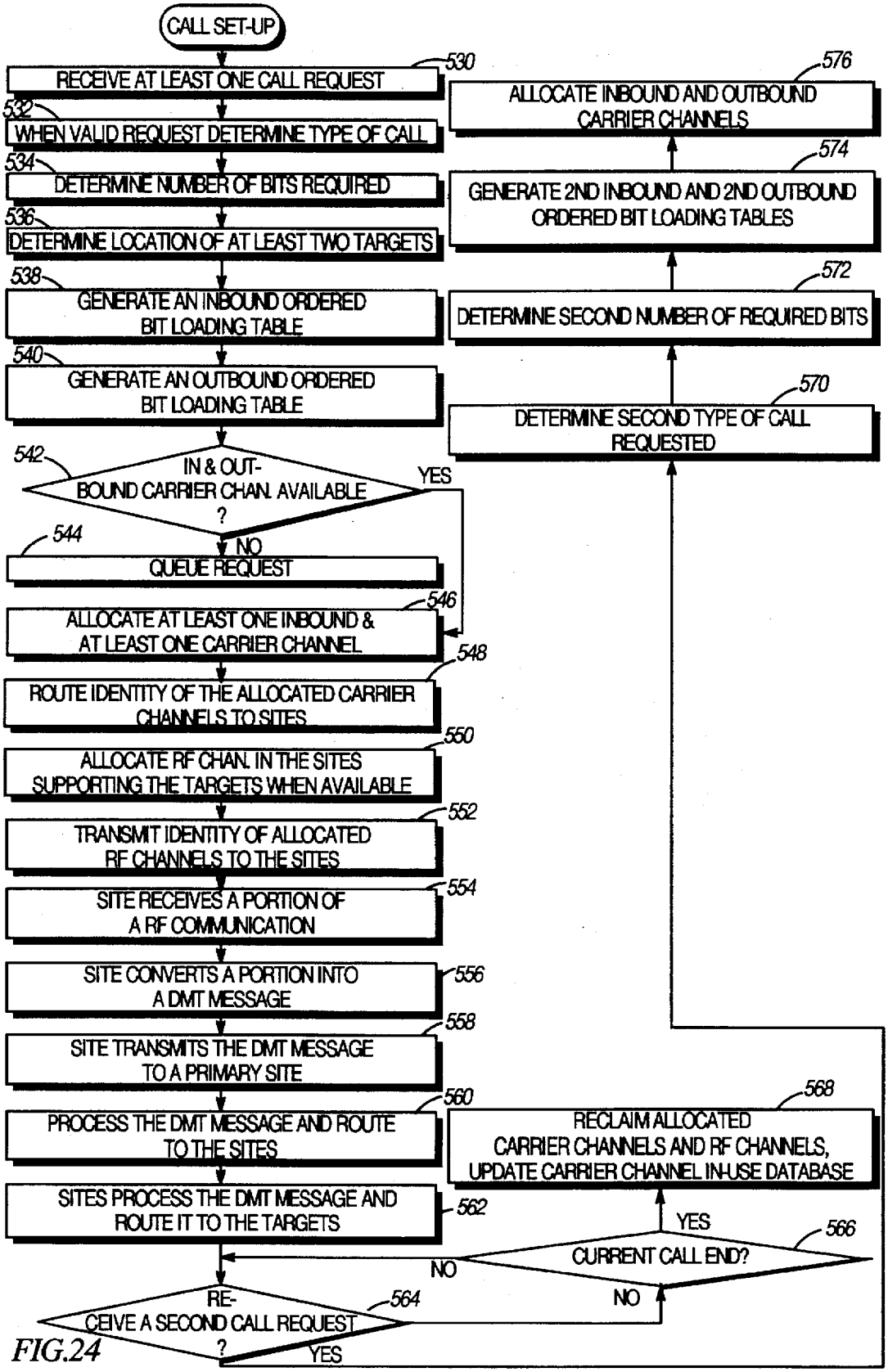
CALL SET-UP
530
RECEIVE AT LEAST ONE CALL REQUEST
532
WHEN VALID REQUEST DETERMINE TYPE OF CALL
534
DETERMINE NUMBER OF BITS REQUIRED
536
DETERMINE LOCATION OF AT LEAST TWO TARGETS
538
GENERATE AN INBOUND ORDERED BIT LOADING TABLE
540
GENERATE AN OUTBOUND ORDERED BIT LOADING TABLE
542
IN & OUT-BOUND CARRIER CHAN. AVAILABLE ?
YES
NO
544
QUEUE REQUEST
546
ALLOCATE AT LEAST ONE INBOUND & AT LEAST ONE CARRIER CHANNEL
548
ROUTE IDENTITY OF THE ALLOCATED CARRIER CHANNELS TO SITES
550
ALLOCATE RF CHAN. IN THE SITES SUPPORTING THE TARGETS WHEN AVAILABLE
552
TRANSMIT IDENTITY OF ALLOCATED RF CHANNELS TO THE SITES
554
SITE RECEIVES A PORTION OF A RF COMMUNICATION
556
SITE CONVERTS A PORTION INTO A DMT MESSAGE
558
SITE TRANSMITS THE DMT MESSAGE TO A PRIMARY SITE
560
PROCESS THE DMT MESSAGE AND ROUTE TO THE SITES
562
SITES PROCESS THE DMT MESSAGE AND ROUTE IT TO THE TARGETS
564
RE-CEIVE A SECOND CALL REQUEST ?
YES
NO
566
CURRENT CALL END?
YES
NO
568
RECLAIM ALLOCATED CARRIER CHANNELS AND RF CHANNELS, UPDATE CARRIER CHANNEL IN-USE DATABASE
570
DETERMINE SECOND TYPE OF CALL REQUESTED
572
DETERMINE SECOND NUMBER OF REQUIRED BITS
574
GENERATE 2ND INBOUND AND 2ND OUTBOUND ORDERED BIT LOADING TABLES
576
ALLOCATE INBOUND AND OUTBOUND CARRIER CHANNELS

FIG.24

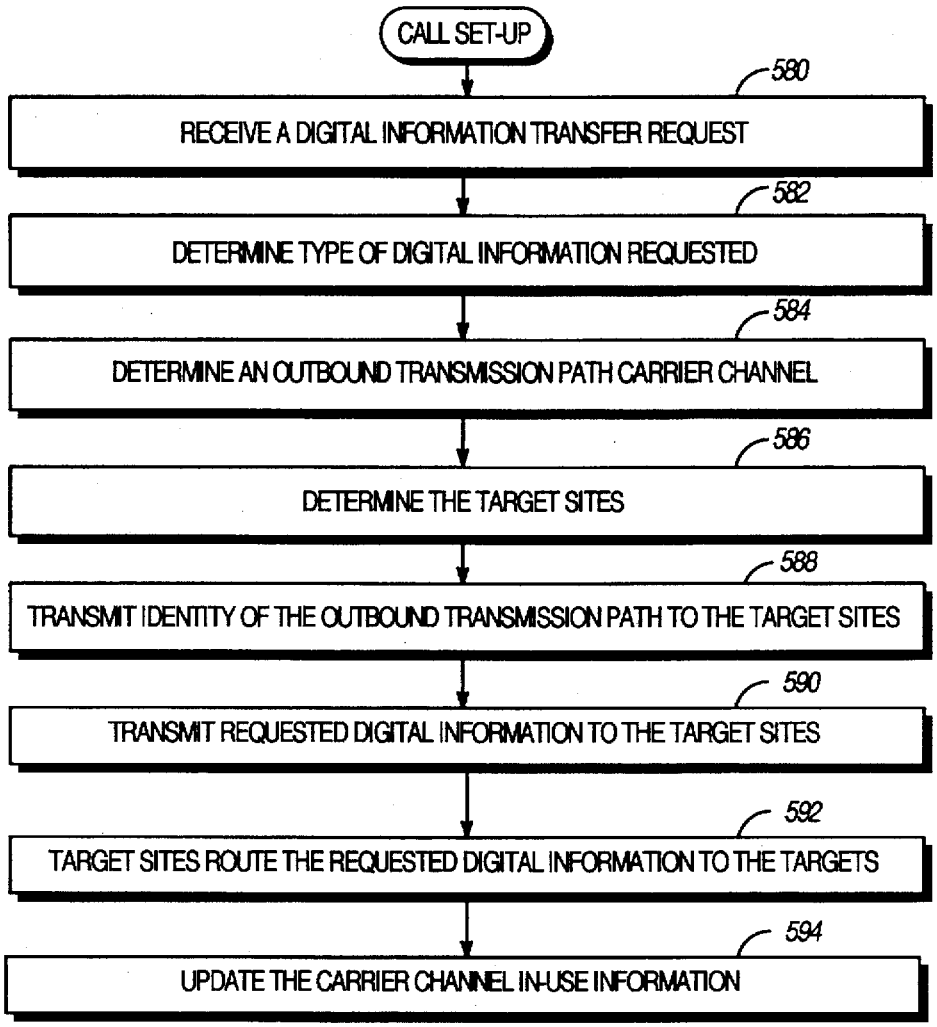
CALL SET-UP
580
RECEIVE A DIGITAL INFORMATION TRANSFER REQUEST
582
DETERMINE TYPE OF DIGITAL INFORMATION REQUESTED
584
DETERMINE AN OUTBOUND TRANSMISSION PATH CARRIER CHANNEL
586
DETERMINE THE TARGET SITES
588
TRANSMIT IDENTITY OF THE OUTBOUND TRANSMISSION PATH TO THE TARGET SITES
590
TRANSMIT REQUESTED DIGITAL INFORMATION TO THE TARGET SITES
592
TARGET SITES ROUTE THE REQUESTED DIGITAL INFORMATION TO THE TARGETS
594
UPDATE THE CARRIER CHANNEL IN-USE INFORMATION

*FIG.25*

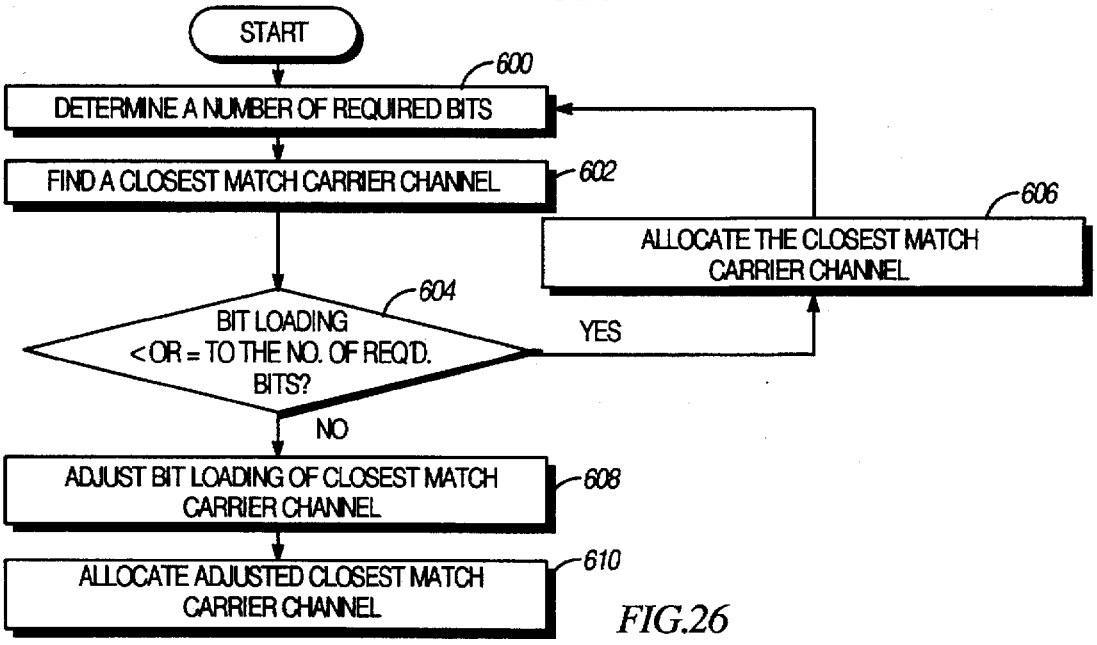
START
600
DETERMINE A NUMBER OF REQUIRED BITS
FIND A CLOSEST MATCH CARRIER CHANNEL
602
606
ALLOCATE THE CLOSEST MATCH CARRIER CHANNEL
604
BIT LOADING <OR = TO THE NO. OF REQ'D. BITS?
YES
NO
ADJUST BIT LOADING OF CLOSEST MATCH CARRIER CHANNEL
608
ALLOCATE ADJUSTED CLOSEST MATCH CARRIER CHANNEL
610

*FIG.26*

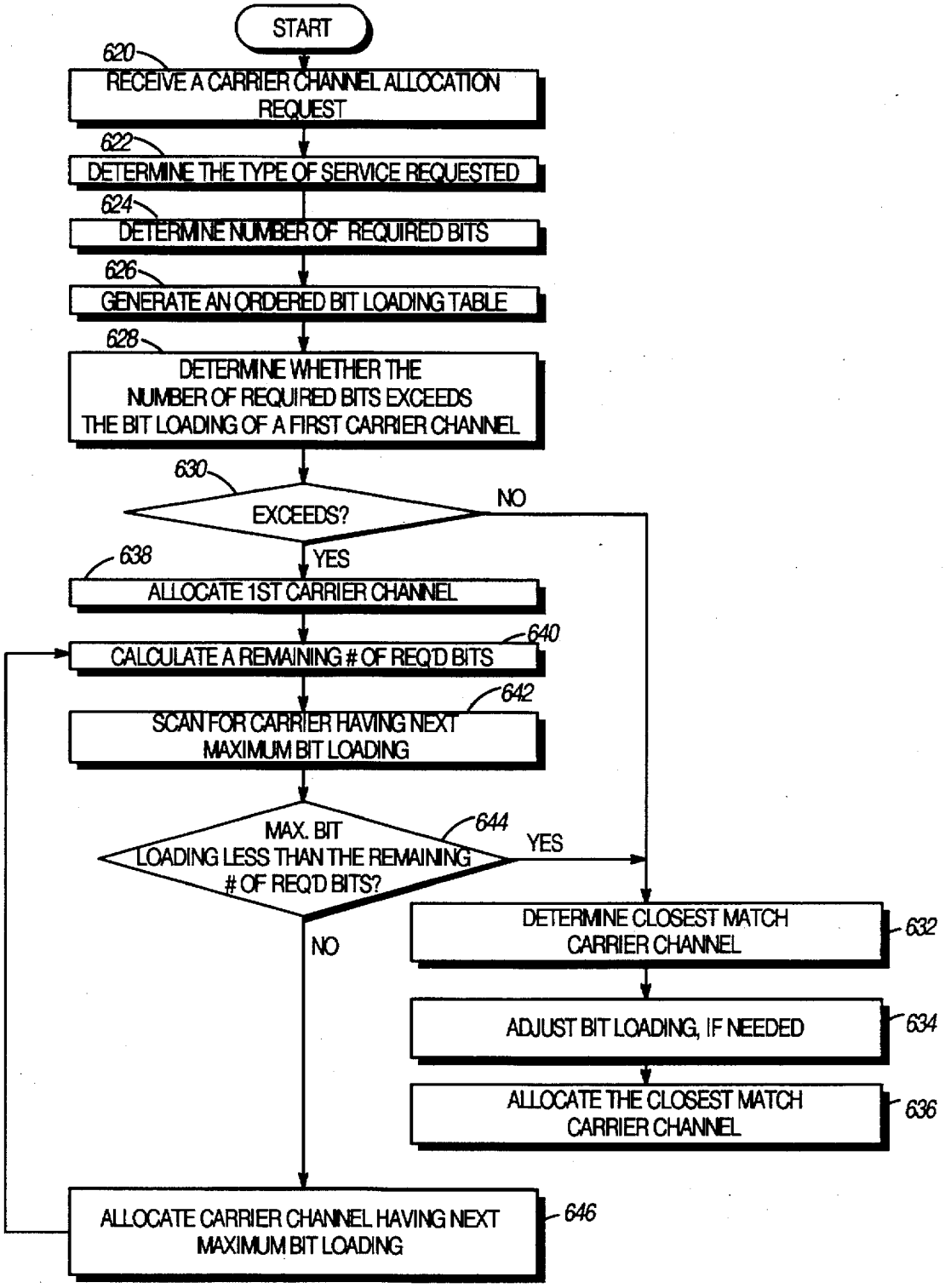
START
620
RECEIVE A CARRIER CHANNEL ALLOCATION REQUEST
622
DETERMINE THE TYPE OF SERVICE REQUESTED
624
DETERMINE NUMBER OF REQUIRED BITS
626
GENERATE AN ORDERED BIT LOADING TABLE
628
DETERMINE WHETHER THE NUMBER OF REQUIRED BITS EXCEEDS THE BIT LOADING OF A FIRST CARRIER CHANNEL
630
EXCEEDS?
NO
YES
638
ALLOCATE 1ST CARRIER CHANNEL
640
CALCULATE A REMAINING # OF REQ'D BITS
642
SCAN FOR CARRIER HAVING NEXT MAXIMUM BIT LOADING
644
MAX. BIT LOADING LESS THAN THE REMAINING # OF REQ'D BITS?
YES
NO
DETERMINE CLOSEST MATCH CARRIER CHANNEL
632
ADJUST BIT LOADING, IF NEEDED
634
ALLOCATE THE CLOSEST MATCH CARRIER CHANNEL
636
ALLOCATE CARRIER CHANNEL HAVING NEXT MAXIMUM BIT LOADING
646

*FIG.27*

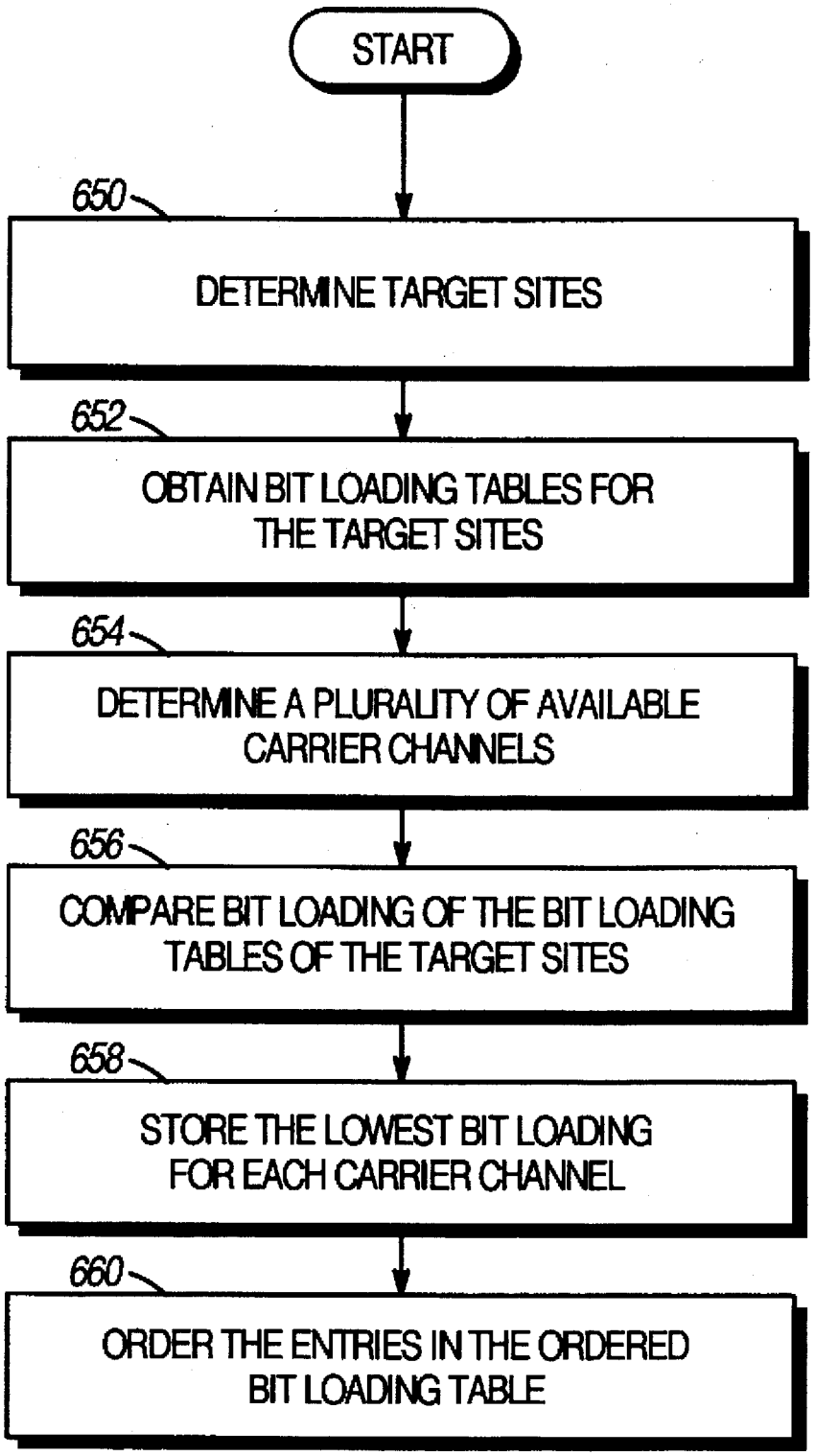
START
650
DETERMINE TARGET SITES
652
OBTAIN BIT LOADING TABLES FOR THE TARGET SITES
654
DETERMINE A PLURALITY OF AVAILABLE CARRIER CHANNELS
656
COMPARE BIT LOADING OF THE BIT LOADING TABLES OF THE TARGET SITES
658
STORE THE LOWEST BIT LOADING FOR EACH CARRIER CHANNEL
660
ORDER THE ENTRIES IN THE ORDERED BIT LOADING TABLE

*FIG.28*

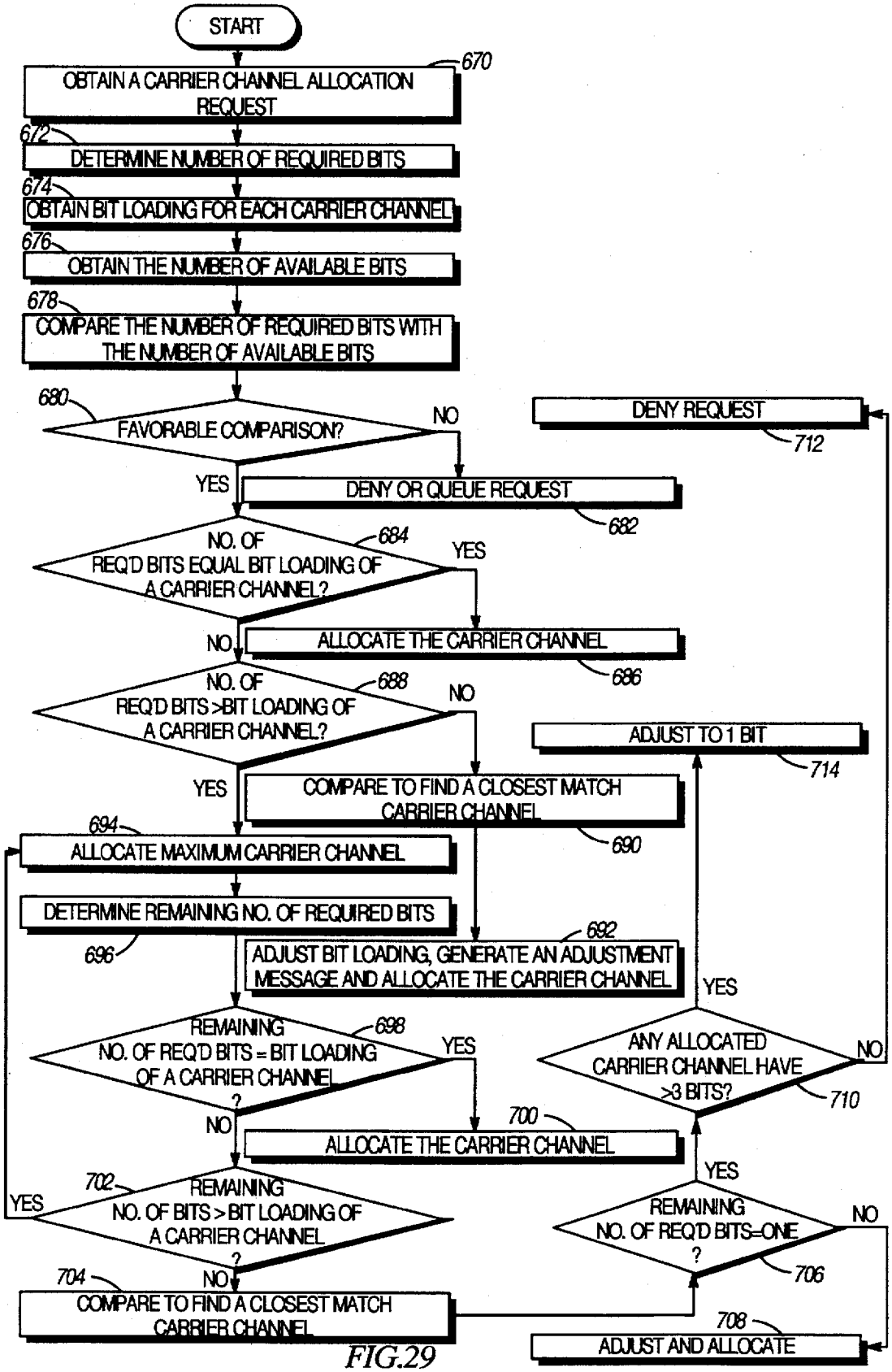
START
OBTAIN A CARRIER CHANNEL ALLOCATION REQUEST
670
DETERMINE NUMBER OF REQUIRED BITS
672
OBTAIN BIT LOADING FOR EACH CARRIER CHANNEL
674
OBTAIN THE NUMBER OF AVAILABLE BITS
676
COMPARE THE NUMBER OF REQUIRED BITS WITH THE NUMBER OF AVAILABLE BITS
678
FAVORABLE COMPARISON?
680
NO
YES
DENY REQUEST
712
DENY OR QUEUE REQUEST
682
NO. OF REQ'D BITS EQUAL BIT LOADING OF A CARRIER CHANNEL?
684
YES
NO
ALLOCATE THE CARRIER CHANNEL
686
NO. OF REQ'D BITS >BIT LOADING OF A CARRIER CHANNEL?
688
NO
YES
ADJUST TO 1 BIT
714
COMPARE TO FIND A CLOSEST MATCH CARRIER CHANNEL
690
ALLOCATE MAXIMUM CARRIER CHANNEL
694
DETERMINE REMAINING NO. OF REQUIRED BITS
696
ADJUST BIT LOADING, GENERATE AN ADJUSTMENT MESSAGE AND ALLOCATE THE CARRIER CHANNEL
692
YES
REMAINING NO. OF REQ'D BITS = BIT LOADING OF A CARRIER CHANNEL ?
698
YES
NO
ANY ALLOCATED CARRIER CHANNEL HAVE >3 BITS?
710
NO
ALLOCATE THE CARRIER CHANNEL
700
YES
REMAINING NO. OF BITS > BIT LOADING OF A CARRIER CHANNEL ?
702
YES
NO
REMAINING NO. OF REQ'D BITS=ONE ?
706
NO
COMPARE TO FIND A CLOSEST MATCH CARRIER CHANNEL
704
ADJUST AND ALLOCATE
708

FIG.29

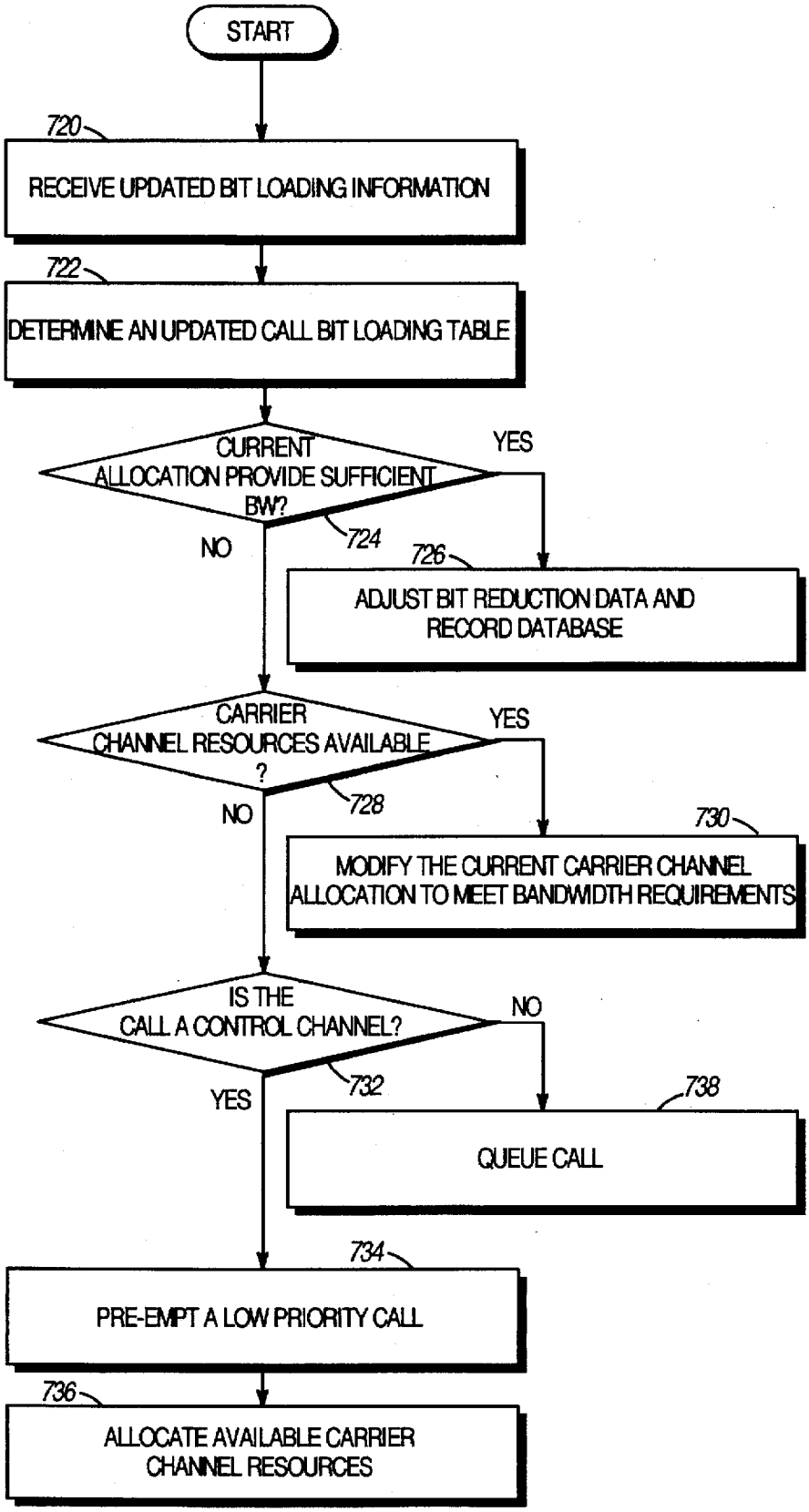
START
720
RECEIVE UPDATED BIT LOADING INFORMATION
722
DETERMINE AN UPDATED CALL BIT LOADING TABLE
CURRENT ALLOCATION PROVIDE SUFFICIENT BW?
YES
NO
724
726
ADJUST BIT REDUCTION DATA AND RECORD DATABASE
CARRIER CHANNEL RESOURCES AVAILABLE ?
YES
NO
728
730
MODIFY THE CURRENT CARRIER CHANNEL ALLOCATION TO MEET BANDWIDTH REQUIREMENTS
IS THE CALL A CONTROL CHANNEL?
NO
YES
732
738
QUEUE CALL
734
PRE-EMPT A LOW PRIORITY CALL
736
ALLOCATE AVAILABLE CARRIER CHANNEL RESOURCES

*FIG.30*

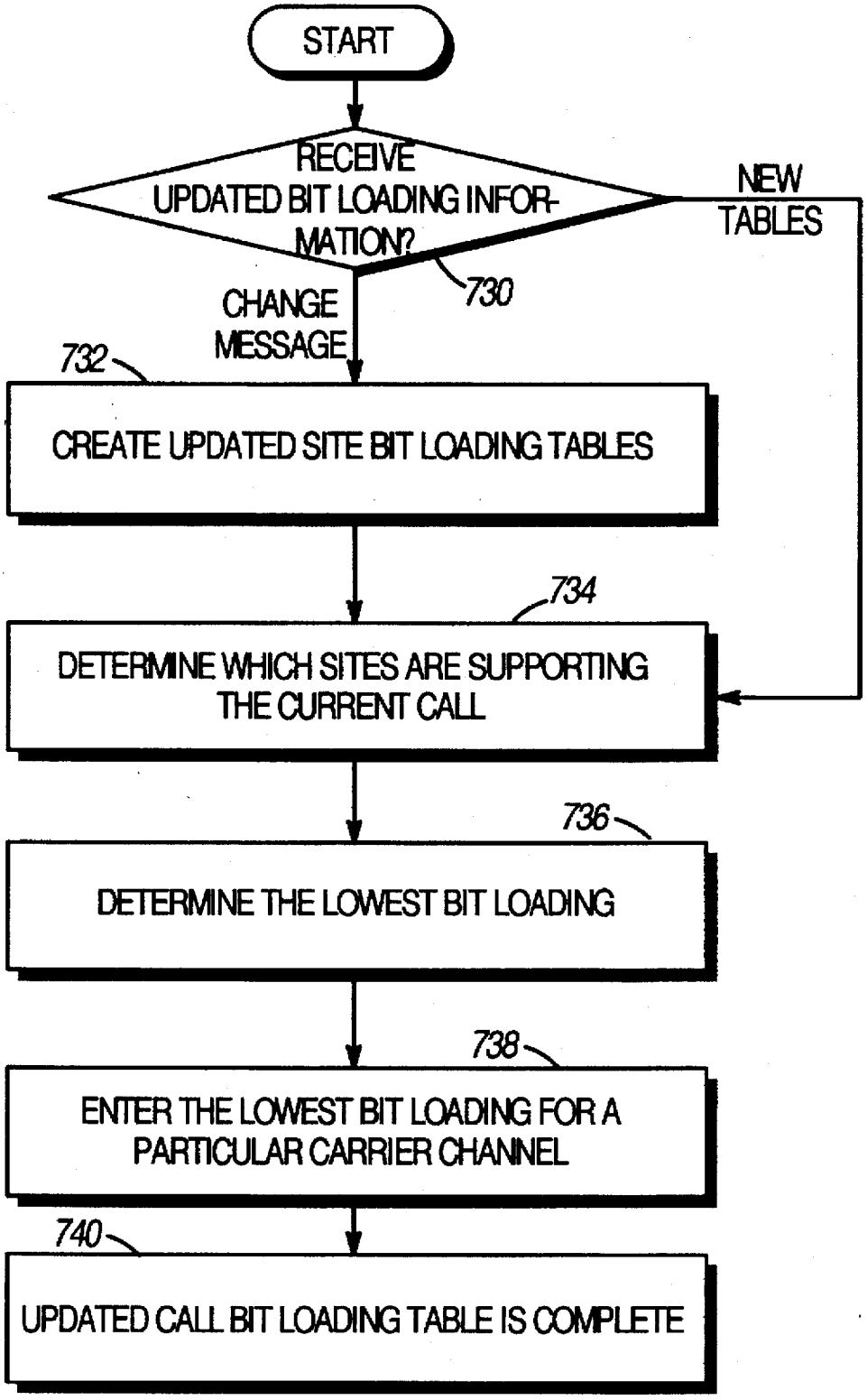
START
RECEIVE UPDATED BIT LOADING INFORMATION?
NEW TABLES
730
CHANGE MESSAGE
732
CREATE UPDATED SITE BIT LOADING TABLES
734
DETERMINE WHICH SITES ARE SUPPORTING THE CURRENT CALL
736
DETERMINE THE LOWEST BIT LOADING
738
ENTER THE LOWEST BIT LOADING FOR A PARTICULAR CARRIER CHANNEL
740
UPDATED CALL BIT LOADING TABLE IS COMPLETE

*FIG.31*

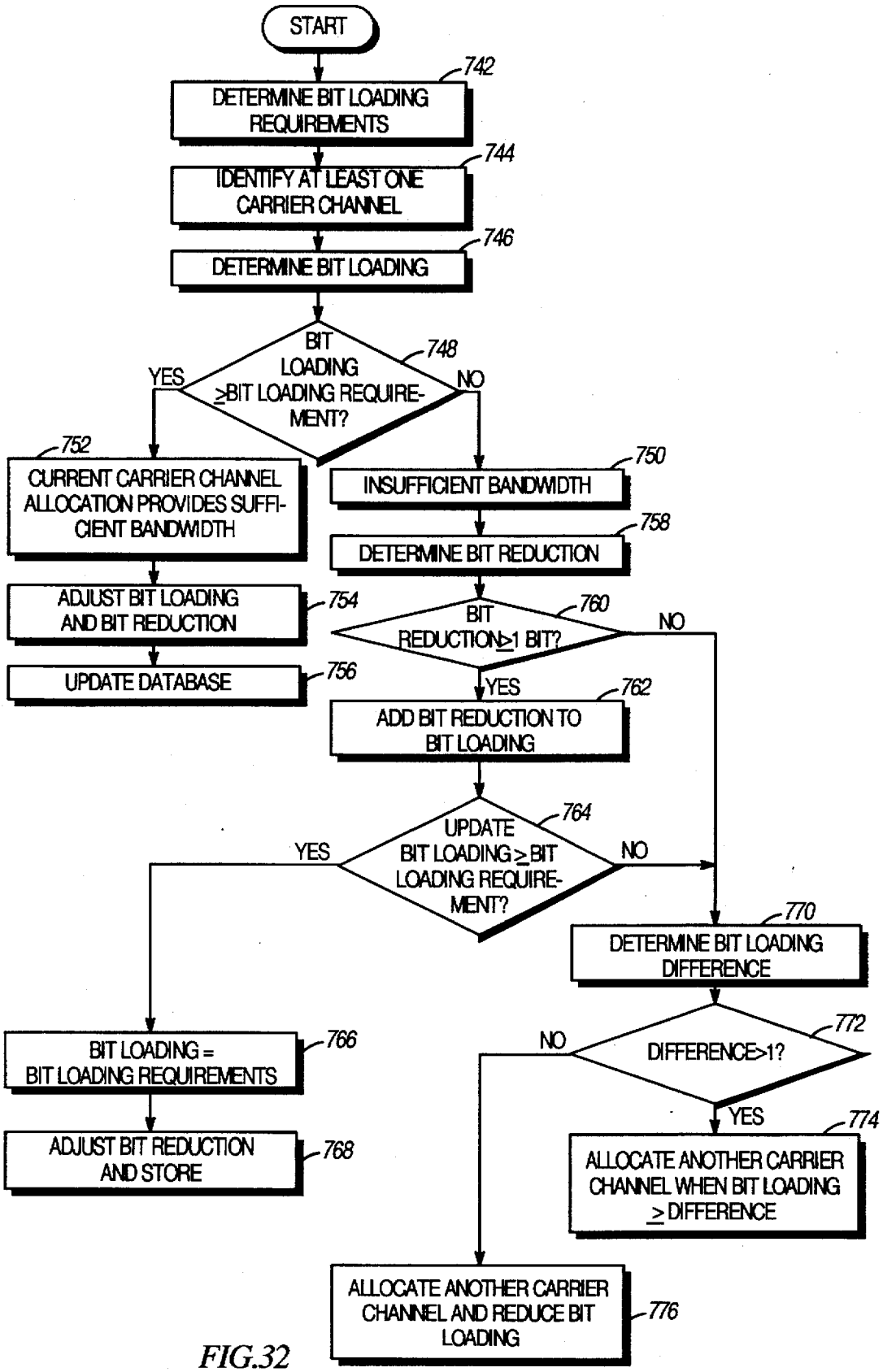
START
742
DETERMINE BIT LOADING REQUIREMENTS
744
IDENTIFY AT LEAST ONE CARRIER CHANNEL
746
DETERMINE BIT LOADING
748
BIT LOADING ≥BIT LOADING REQUIREMENT?
YES
NO
752
CURRENT CARRIER CHANNEL ALLOCATION PROVIDES SUFFICIENT BANDWIDTH
750
INSUFFICIENT BANDWIDTH
758
DETERMINE BIT REDUCTION
754
ADJUST BIT LOADING AND BIT REDUCTION
760
BIT REDUCTION≥1 BIT?
NO
756
UPDATE DATABASE
YES
762
ADD BIT REDUCTION TO BIT LOADING
764
UPDATE BIT LOADING ≥ BIT LOADING REQUIREMENT?
YES
NO
770
DETERMINE BIT LOADING DIFFERENCE
766
BIT LOADING = BIT LOADING REQUIREMENTS
NO
772
DIFFERENCE>1?
YES
768
ADJUST BIT REDUCTION AND STORE
774
ALLOCATE ANOTHER CARRIER CHANNEL WHEN BIT LOADING ≥ DIFFERENCE
776
ALLOCATE ANOTHER CARRIER CHANNEL AND REDUCE BIT LOADING

FIG.32

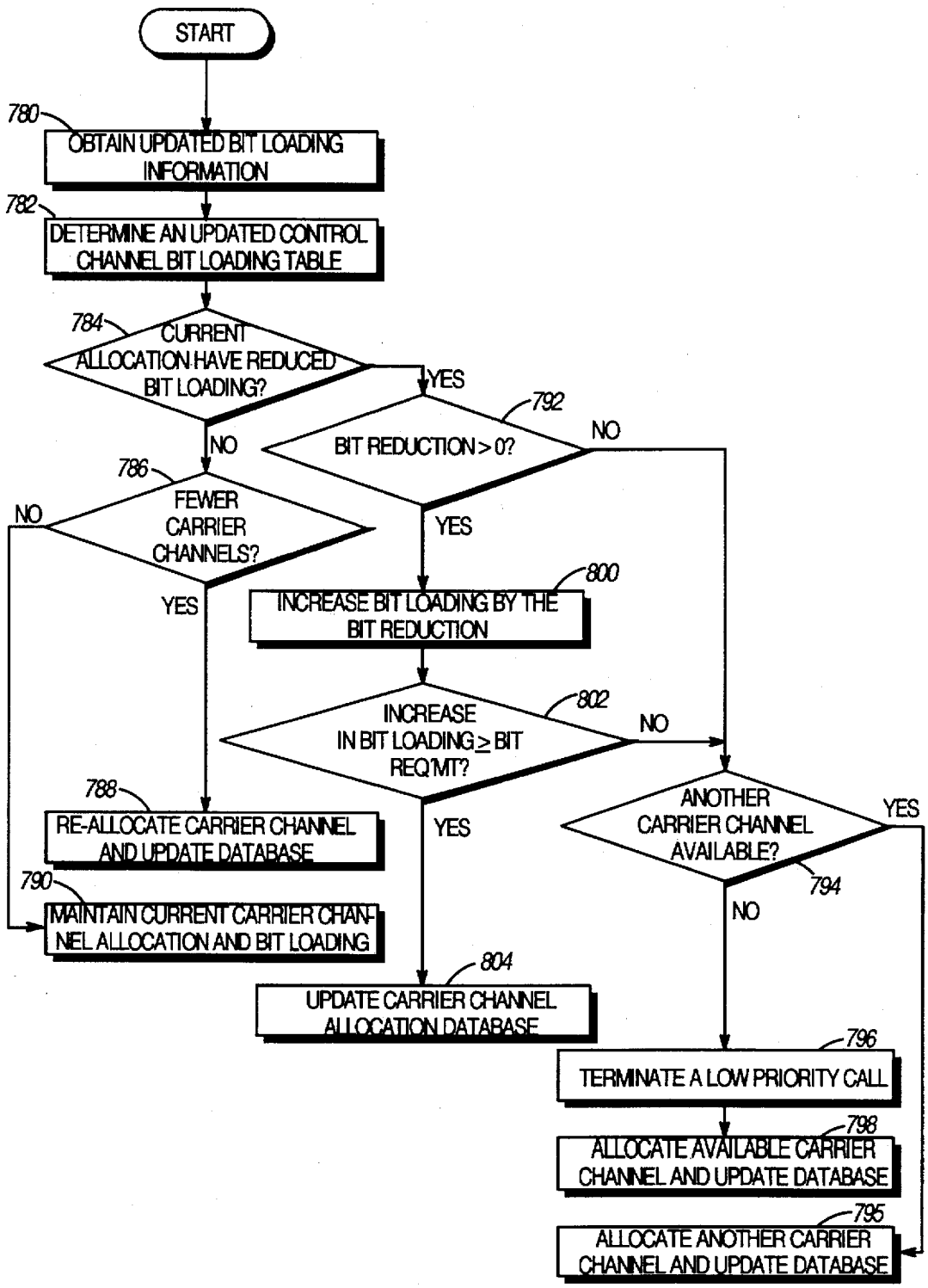
START
780
OBTAIN UPDATED BIT LOADING INFORMATION
782
DETERMINE AN UPDATED CONTROL CHANNEL BIT LOADING TABLE
784
CURRENT ALLOCATION HAVE REDUCED BIT LOADING?
YES
NO
792
BIT REDUCTION > 0?
NO
YES
786
FEWER CARRIER CHANNELS?
NO
YES
800
INCREASE BIT LOADING BY THE BIT REDUCTION
802
INCREASE IN BIT LOADING ≥ BIT REQ'MT?
NO
YES
788
RE-ALLOCATE CARRIER CHANNEL AND UPDATE DATABASE
790
MAINTAIN CURRENT CARRIER CHANNEL ALLOCATION AND BIT LOADING
ANOTHER CARRIER CHANNEL AVAILABLE?
YES
NO
794
804
UPDATE CARRIER CHANNEL ALLOCATION DATABASE
796
TERMINATE A LOW PRIORITY CALL
798
ALLOCATE AVAILABLE CARRIER CHANNEL AND UPDATE DATABASE
795
ALLOCATE ANOTHER CARRIER CHANNEL AND UPDATE DATABASE

*FIG.33*

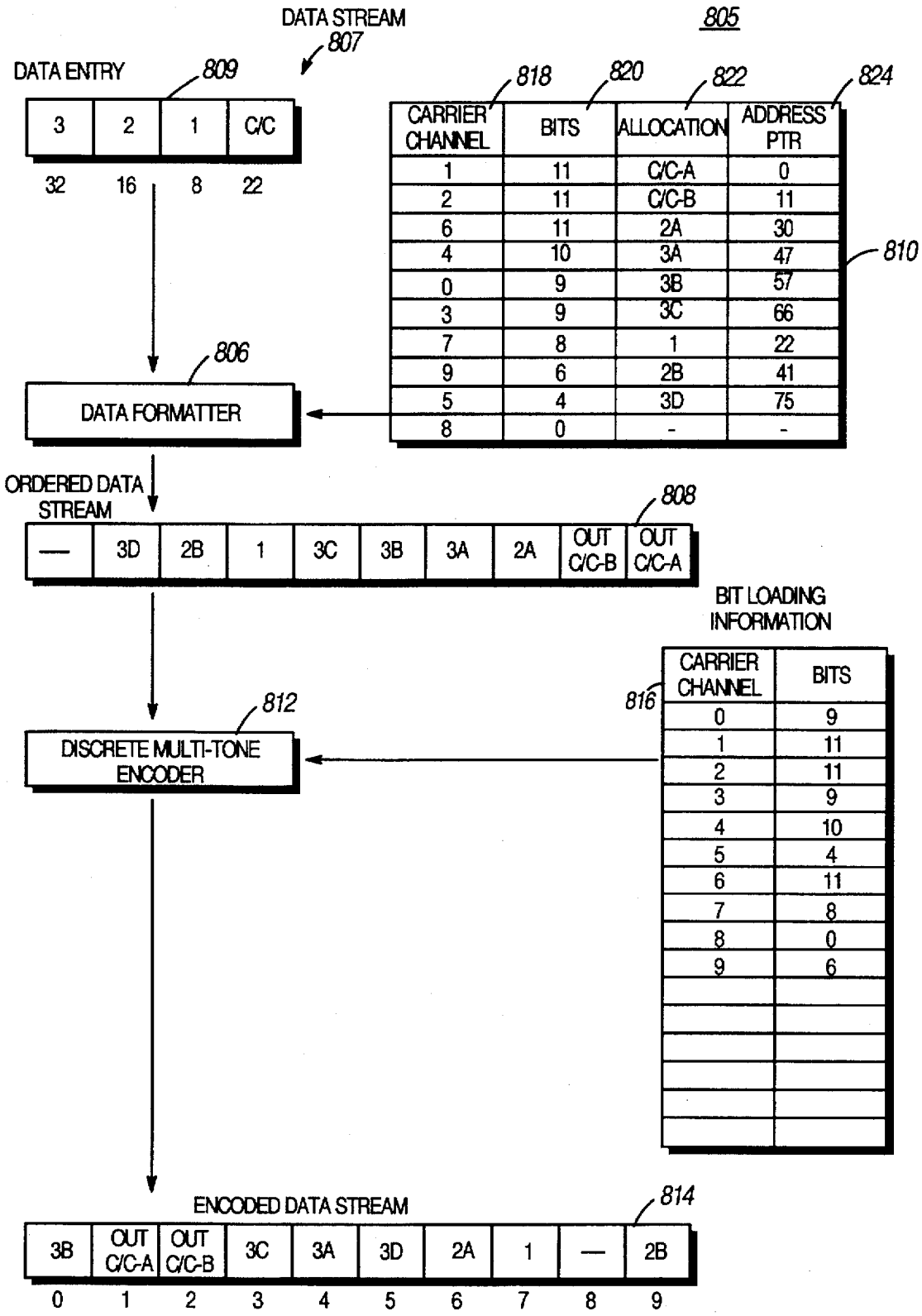
DATA STREAM
807
805
DATA ENTRY
809
3
2
1
C/C
32
16
8
22
818
820
822
824
CARRIER CHANNEL
BITS
ALLOCATION
ADDRESS PTR
1 11 C/C-A 0
2 11 C/C-B 11
6 11 2A 30
4 10 3A 47
0 9 3B 57
3 9 3C 66
7 8 1 22
9 6 2B 41
5 4 3D 75
8 0 - -
810
806
DATA FORMATTER
ORDERED DATA STREAM
808
— 3D 2B 1 3C 3B 3A 2A OUT C/C-B OUT C/C-A
BIT LOADING INFORMATION
816
CARRIER CHANNEL
BITS
0 9
1 11
2 11
3 9
4 10
5 4
6 11
7 8
8 0
9 6
812
DISCRETE MULTI-TONE ENCODER
ENCODED DATA STREAM
814
3B OUT C/C-A OUT C/C-B 3C 3A 3D 2A 1 — 2B
0 1 2 3 4 5 6 7 8 9

*FIG.34*

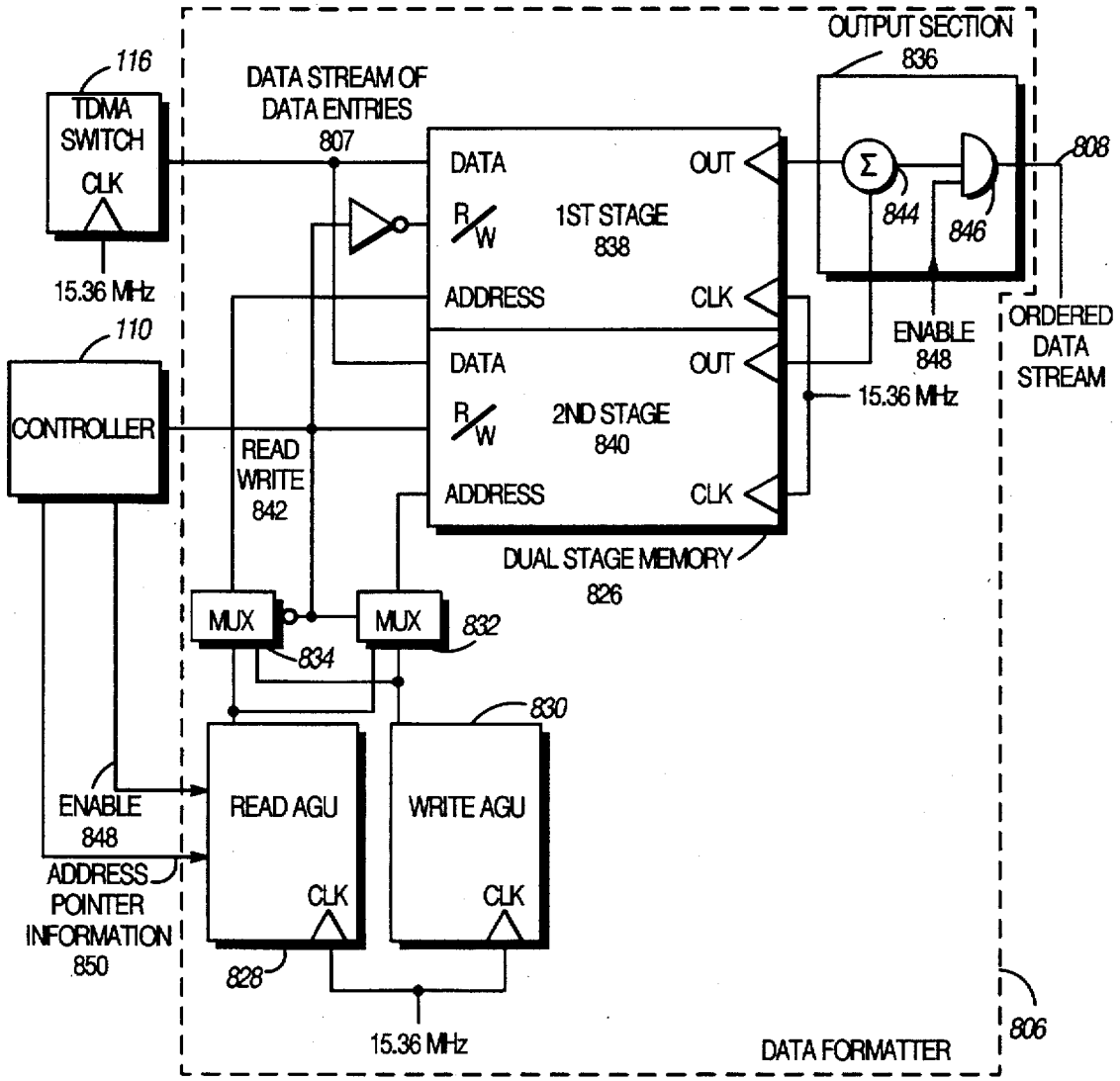
116
TDMA SWITCH
CLK
15.36 MHz
110
CONTROLLER
DATA STREAM OF DATA ENTRIES
807
DATA
R/W
1ST STAGE
838
ADDRESS
OUT
CLK
DATA
R/W
2ND STAGE
840
ADDRESS
OUT
CLK
DUAL STAGE MEMORY
826
OUTPUT SECTION
836
Σ
844
846
808
ENABLE
848
15.36 MHz
ORDERED DATA STREAM
READ WRITE
842
MUX
834
MUX
832
830
ENABLE
848
ADDRESS POINTER INFORMATION
850
READ AGU
CLK
WRITE AGU
CLK
828
15.36 MHz
DATA FORMATTER
806

*FIG.35*

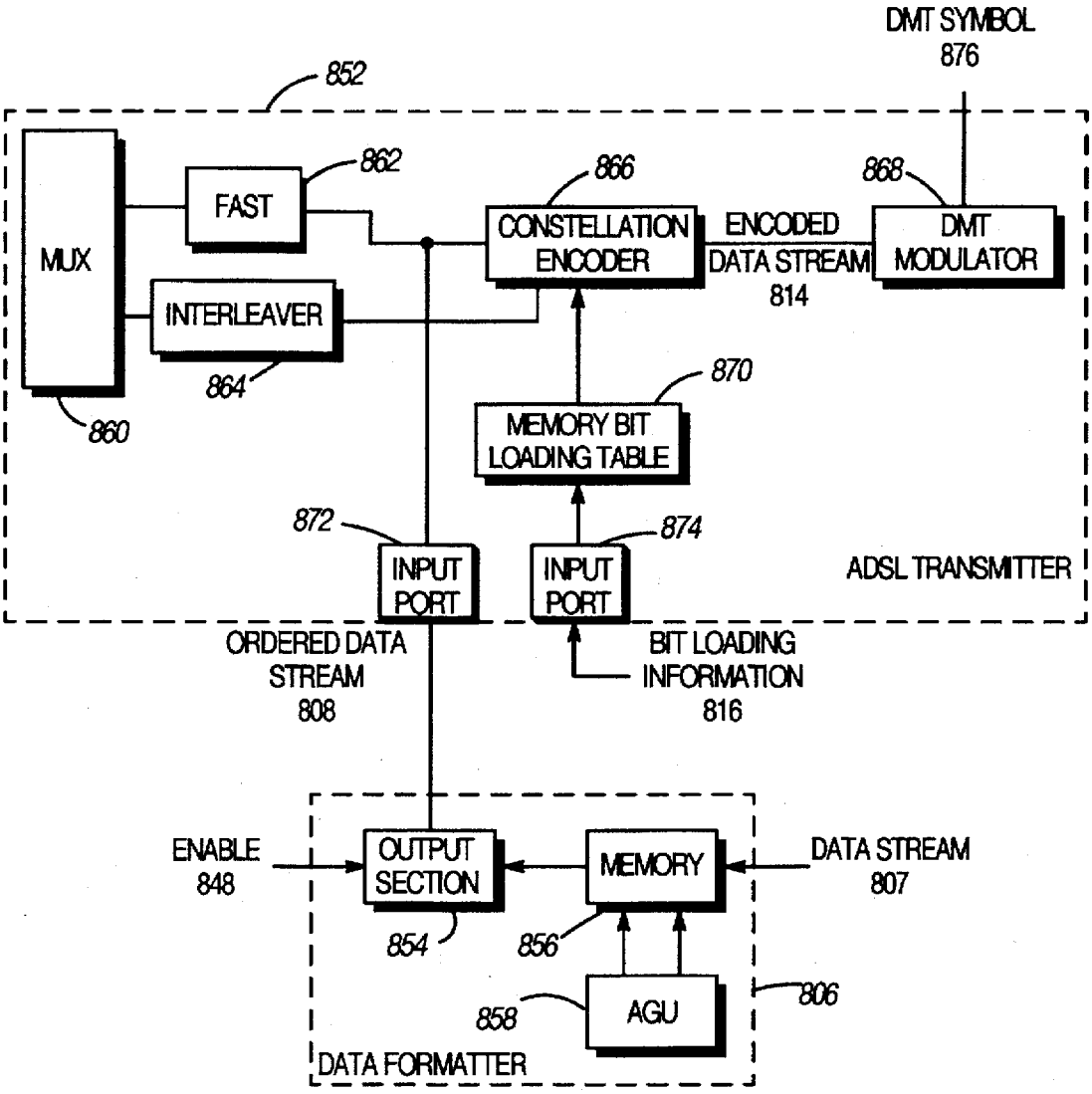
DMT SYMBOL
876
852
MUX
FAST
862
INTERLEAVER
864
860
CONSTELLATION ENCODER
866
ENCODED DATA STREAM
814
DMT MODULATOR
868
MEMORY BIT LOADING TABLE
870
872
INPUT PORT
874
INPUT PORT
ADSL TRANSMITTER
ORDERED DATA STREAM
808
BIT LOADING INFORMATION
816
ENABLE
848
OUTPUT SECTION
854
MEMORY
856
DATA STREAM
807
AGU
858
806
DATA FORMATTER

*FIG.36*

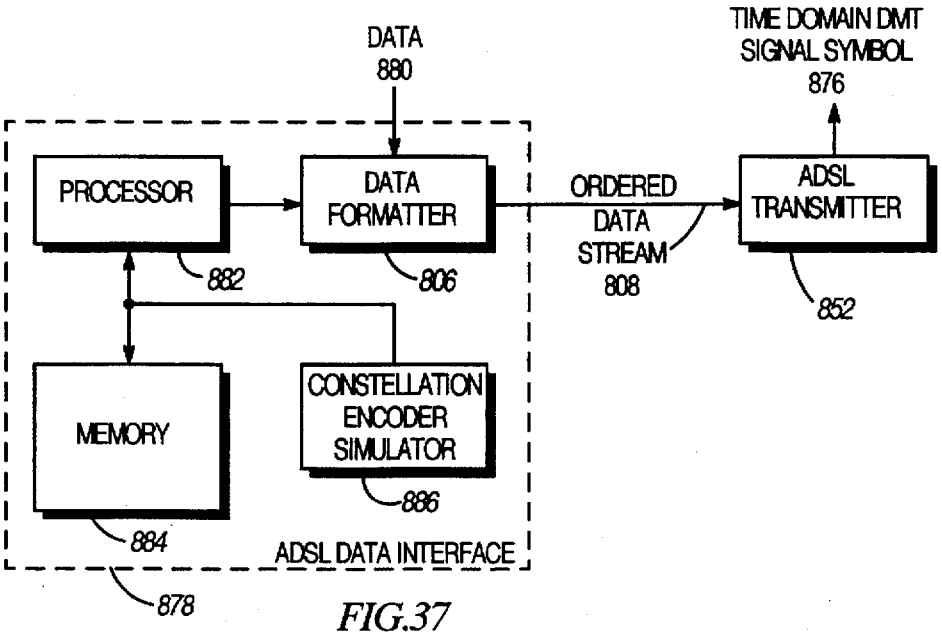


FIG.37

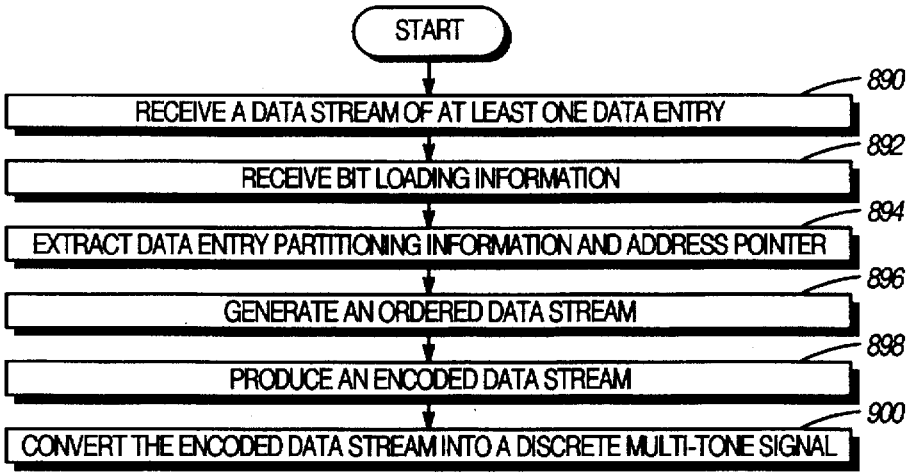


FIG.38

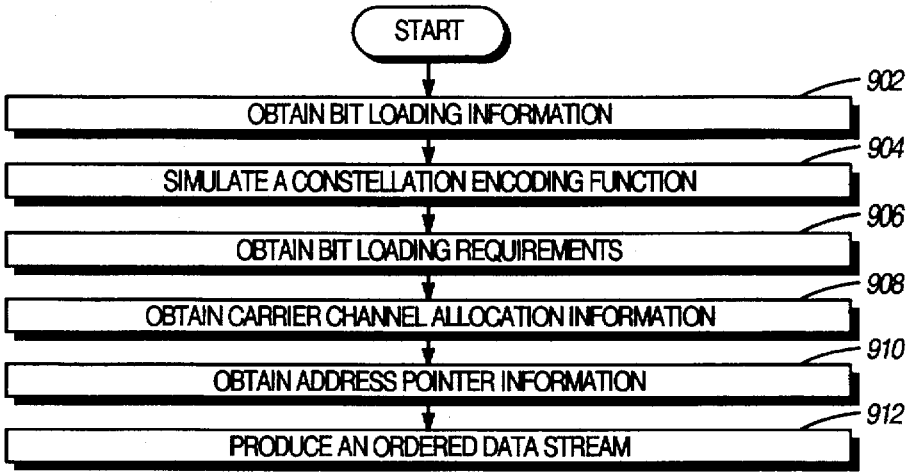


FIG.39

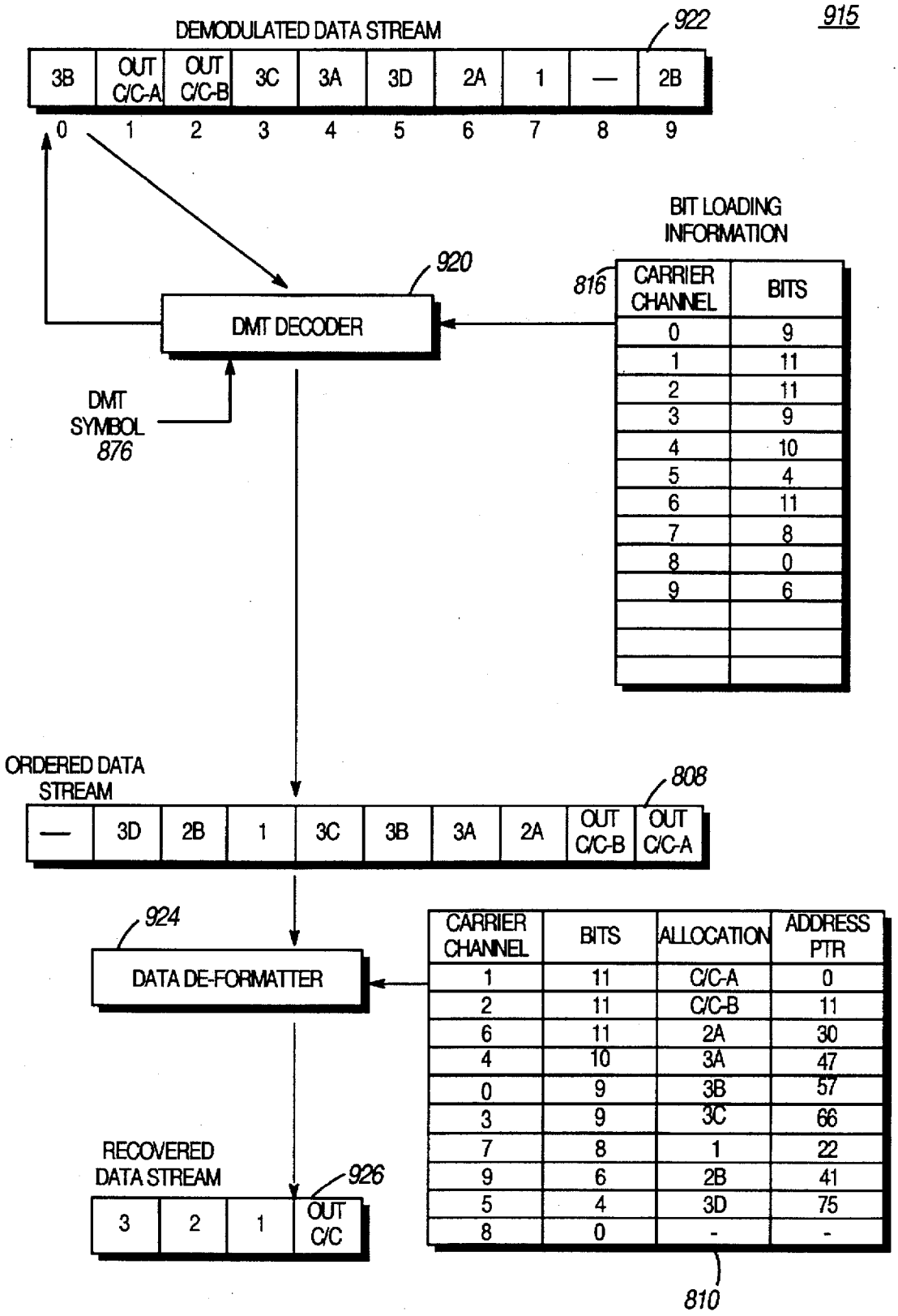


| CARRIER CHANNEL | BITS |
|---|---|
| 0 | 9 |
| 1 | 11 |
| 2 | 11 |
| 3 | 9 |
| 4 | 10 |
| 5 | 4 |
| 6 | 11 |
| 7 | 8 |
| 8 | 0 |
| 9 | 6 |

| CARRIER CHANNEL | BITS | ALLOCATION | ADDRESS PTR |
|---|---|---|---|
| 1 | 11 | C/C-A | 0 |
| 2 | 11 | C/C-B | 11 |
| 6 | 11 | 2A | 30 |
| 4 | 10 | 3A | 47 |
| 0 | 9 | 3B | 57 |
| 3 | 9 | 3C | 66 |
| 7 | 8 | 1 | 22 |
| 9 | 6 | 2B | 41 |
| 5 | 4 | 3D | 75 |
| 8 | 0 | - | - |

*FIG.40*

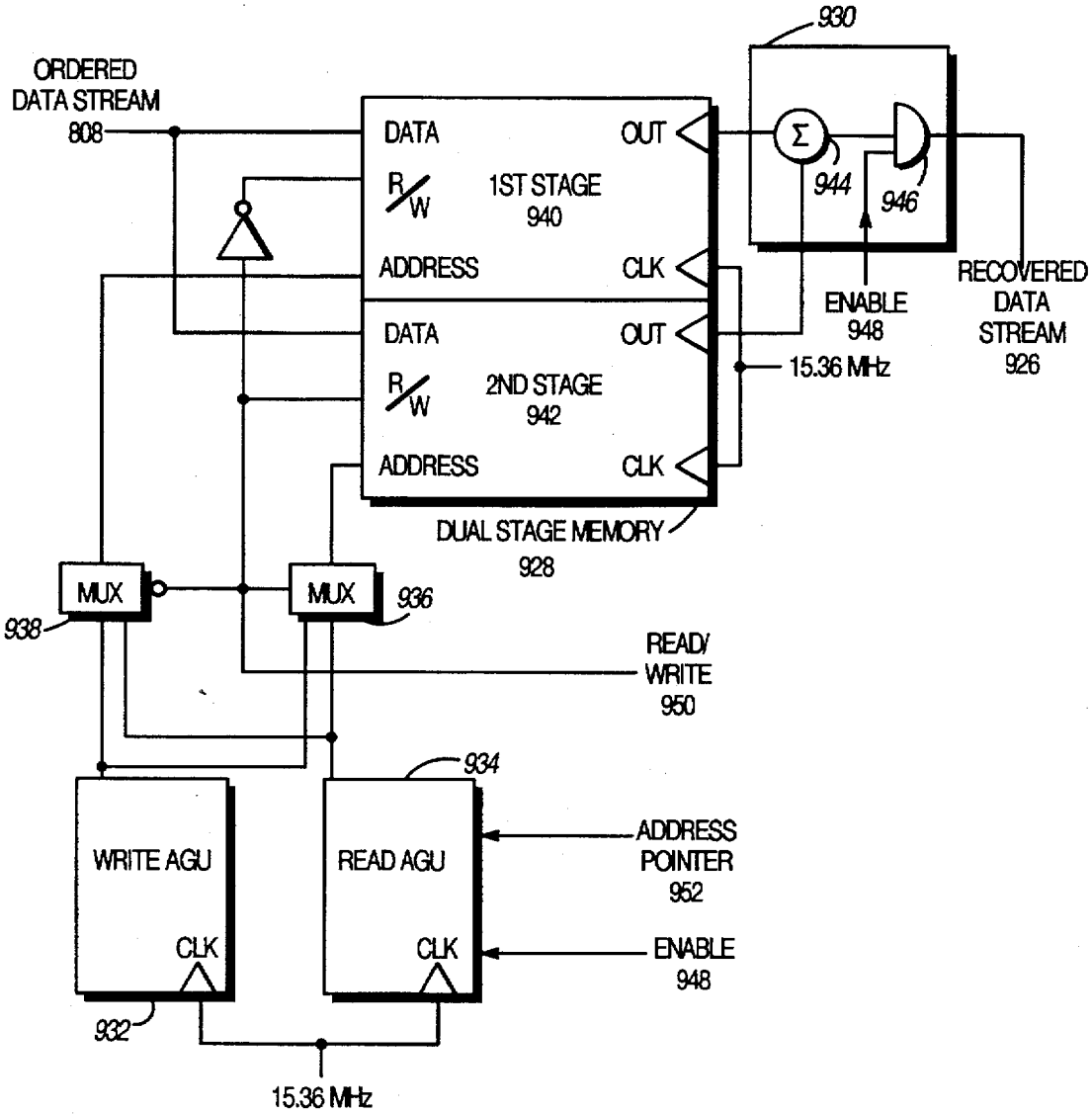
930
ORDERED
DATA STREAM
808
DATA
OUT
R/W
1ST STAGE
940
ADDRESS
CLK
944
946
ENABLE
948
RECOVERED
DATA
STREAM
926
DATA
OUT
R/W
2ND STAGE
942
15.36 MHz
ADDRESS
CLK
DUAL STAGE MEMORY
928
MUX
938
MUX
936
READ/
WRITE
950
934
WRITE AGU
READ AGU
ADDRESS
POINTER
952
CLK
CLK
ENABLE
948
932
15.36 MHz

FIG.41

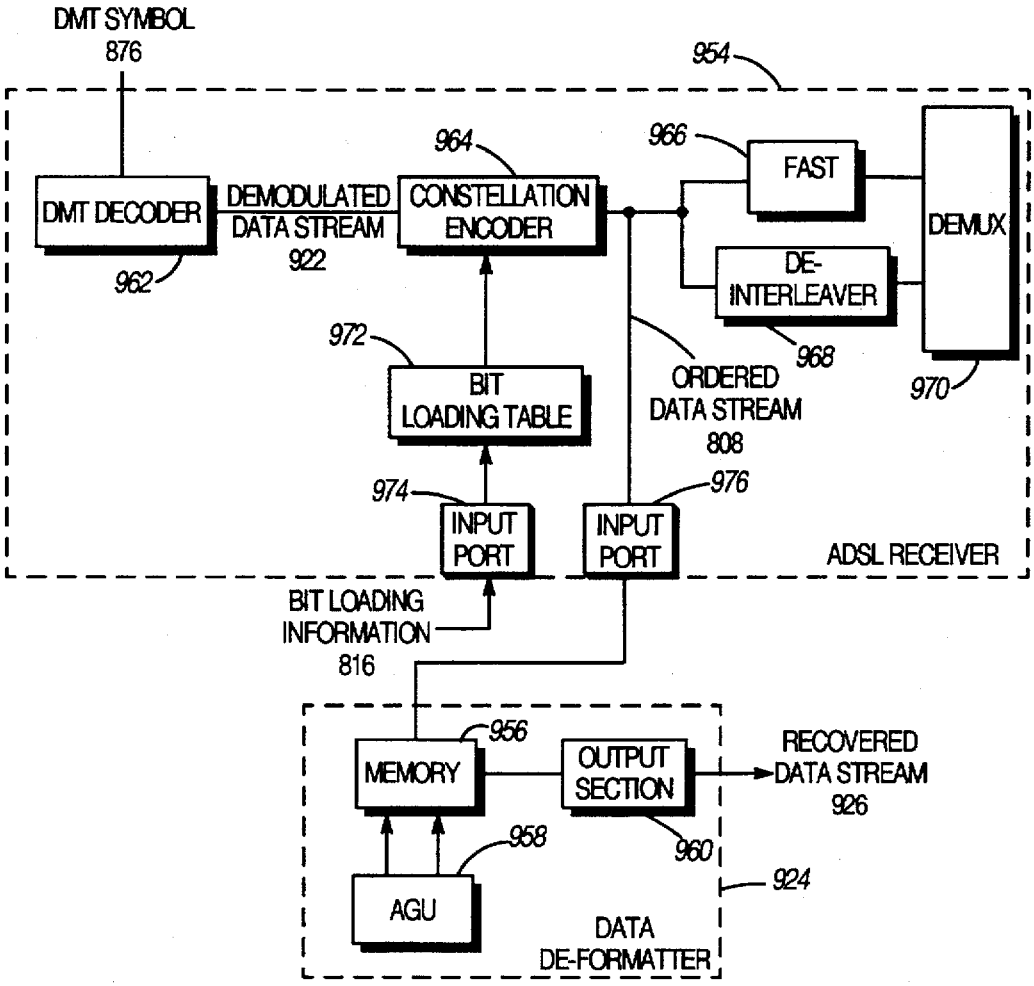
DMT SYMBOL
876
954
964
966
FAST
DMT DECODER
DEMODULATED
DATA STREAM
922
CONSTELLATION
ENCODER
DEMUX
DE-
INTERLEAVER
962
968
970
972
BIT
LOADING TABLE
ORDERED
DATA STREAM
808
974
976
INPUT
PORT
INPUT
PORT
ADSL RECEIVER
BIT LOADING
INFORMATION
816
956
MEMORY
OUTPUT
SECTION
RECOVERED
DATA STREAM
926
958
960
924
AGU
DATA
DE-FORMATTER

FIG.42

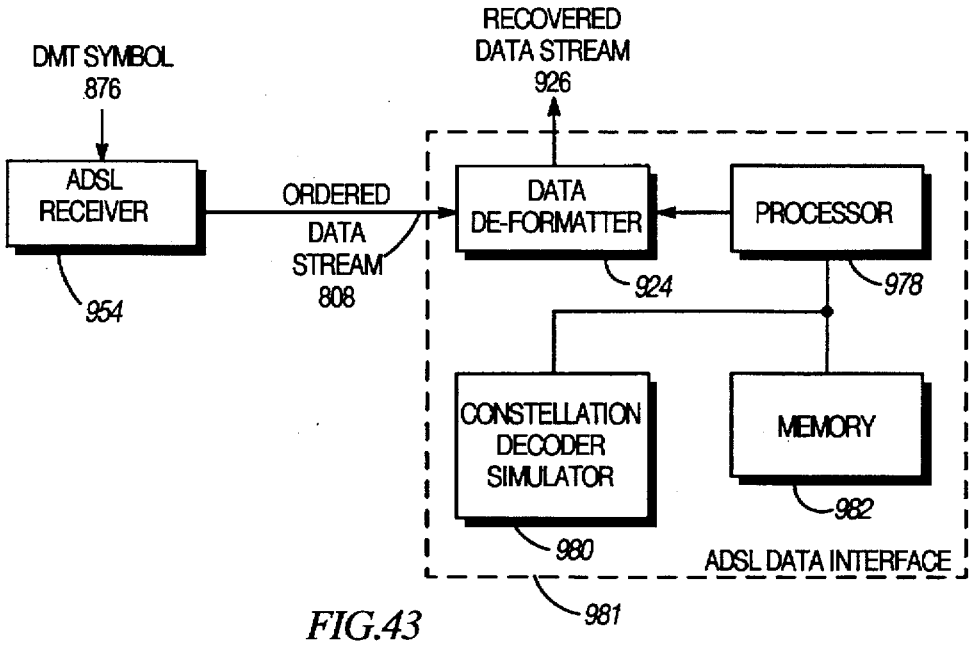
RECOVERED
DATA STREAM
926
DMT SYMBOL
876
ADSL
RECEIVER
ORDERED
DATA
STREAM
808
DATA
DE-FORMATTER
PROCESSOR
954
924
978
CONSTELLATION
DECODER
SIMULATOR
MEMORY
982
980
ADSL DATA INTERFACE
981

FIG.43

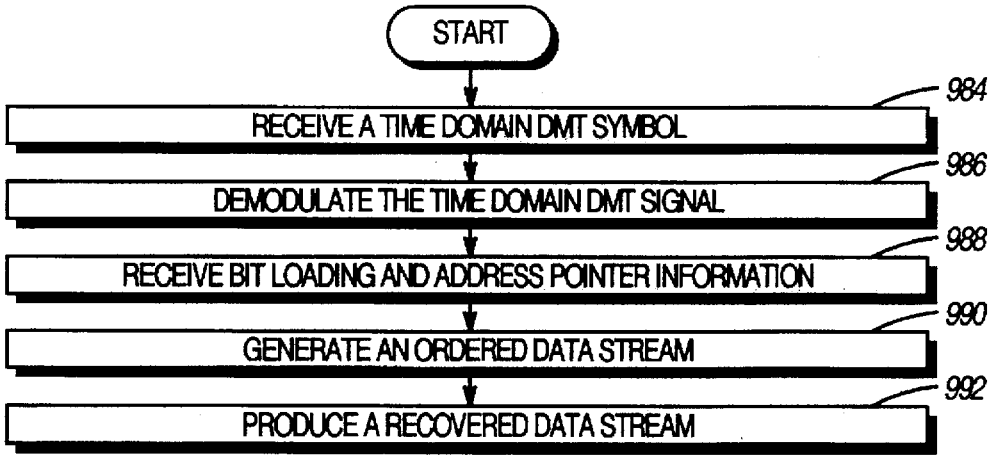


FIG.44

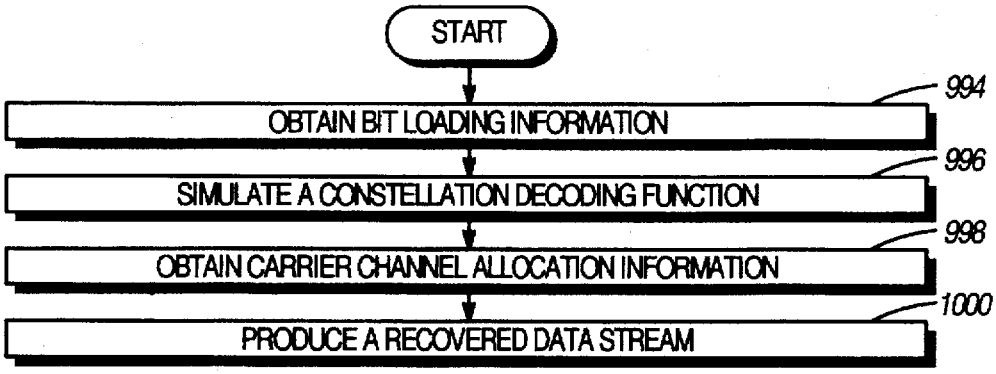


FIG.45

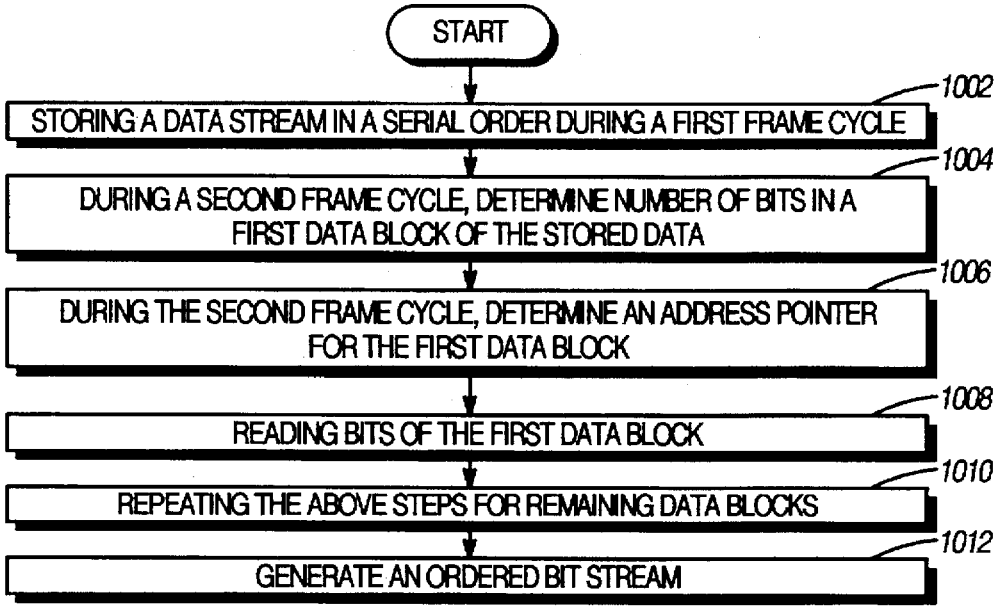


FIG.46

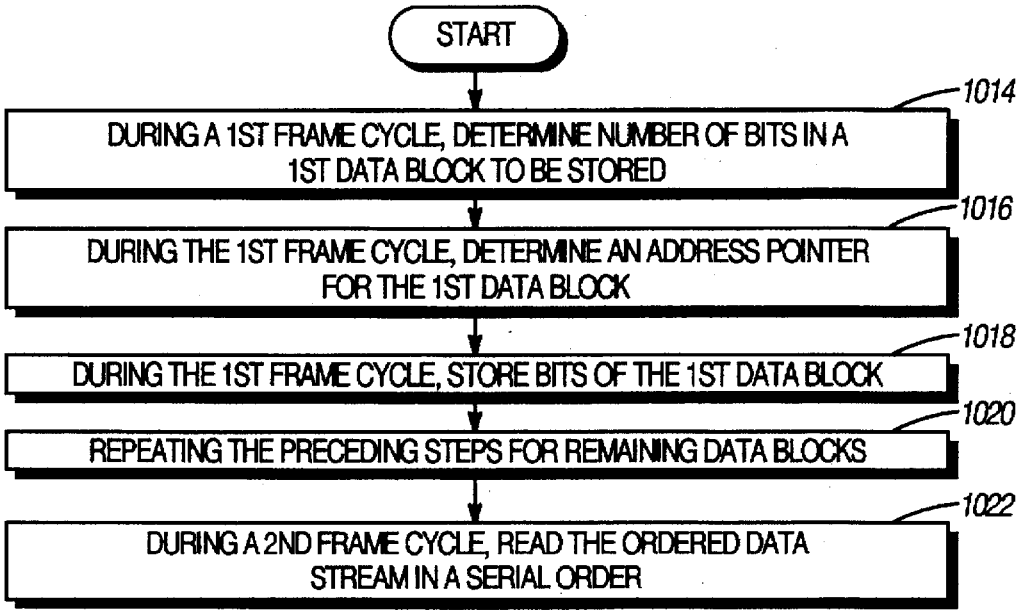
START
1014
DURING A 1ST FRAME CYCLE, DETERMINE NUMBER OF BITS IN A 1ST DATA BLOCK TO BE STORED
1016
DURING THE 1ST FRAME CYCLE, DETERMINE AN ADDRESS POINTER FOR THE 1ST DATA BLOCK
1018
DURING THE 1ST FRAME CYCLE, STORE BITS OF THE 1ST DATA BLOCK
1020
REPEATING THE PRECEDING STEPS FOR REMAINING DATA BLOCKS
1022
DURING A 2ND FRAME CYCLE, READ THE ORDERED DATA STREAM IN A SERIAL ORDER

*FIG.47*

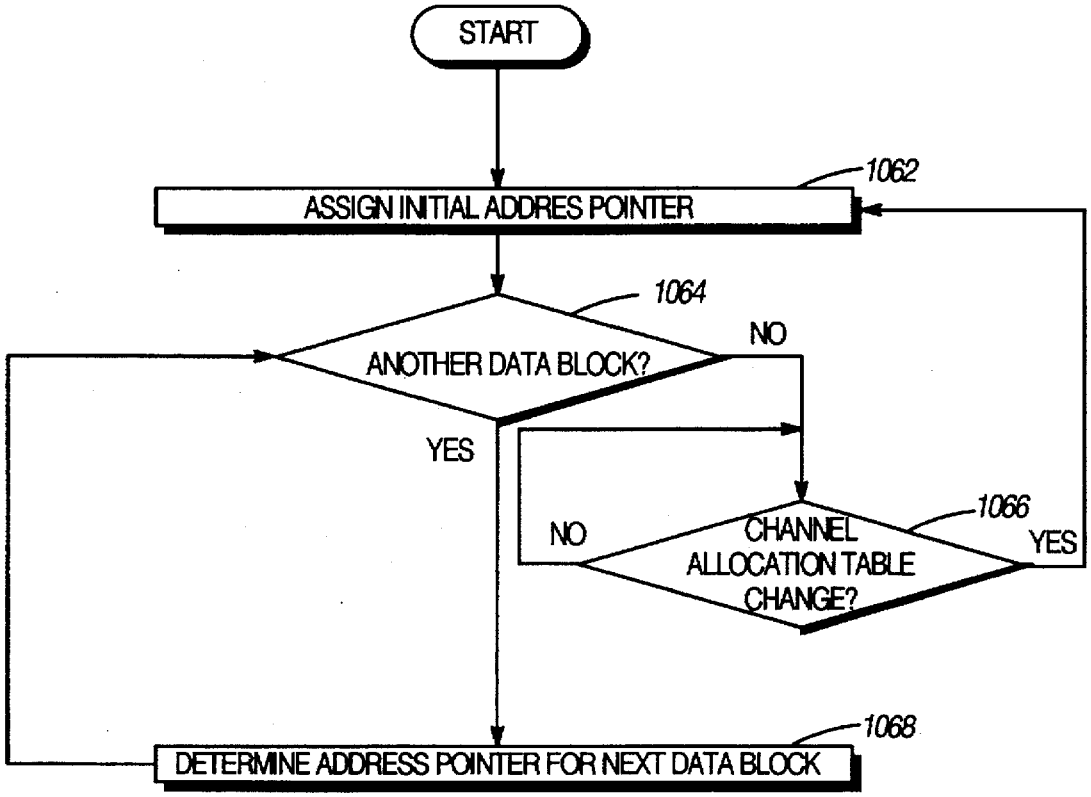
START
1062
ASSIGN INITIAL ADDRES POINTER
1064
ANOTHER DATA BLOCK?
NO
YES
1066
CHANNEL ALLOCATION TABLE CHANGE?
NO
YES
1068
DETERMINE ADDRESS POINTER FOR NEXT DATA BLOCK

*FIG.50*

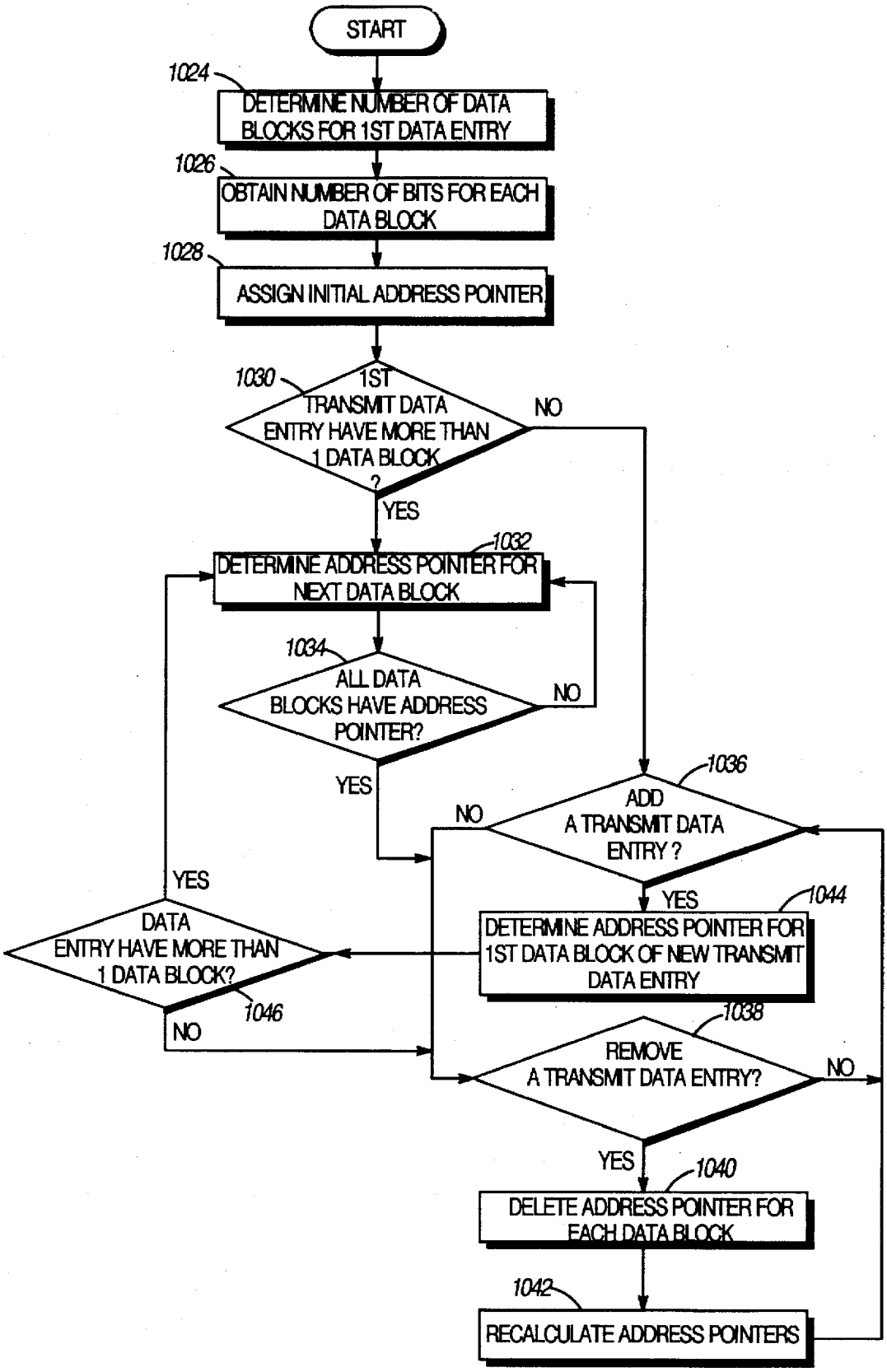
START
1024
DETERMINE NUMBER OF DATA BLOCKS FOR 1ST DATA ENTRY
1026
OBTAIN NUMBER OF BITS FOR EACH DATA BLOCK
1028
ASSIGN INITIAL ADDRESS POINTER
1030
1ST TRANSMIT DATA ENTRY HAVE MORE THAN 1 DATA BLOCK ?
NO
YES
1032
DETERMINE ADDRESS POINTER FOR NEXT DATA BLOCK
1034
ALL DATA BLOCKS HAVE ADDRESS POINTER?
NO
YES
1036
ADD A TRANSMIT DATA ENTRY ?
NO
YES
1044
DETERMINE ADDRESS POINTER FOR 1ST DATA BLOCK OF NEW TRANSMIT DATA ENTRY
YES
DATA ENTRY HAVE MORE THAN 1 DATA BLOCK?
1046
NO
1038
REMOVE A TRANSMIT DATA ENTRY?
NO
YES
1040
DELETE ADDRESS POINTER FOR EACH DATA BLOCK
1042
RECALCULATE ADDRESS POINTERS

*FIG.48*

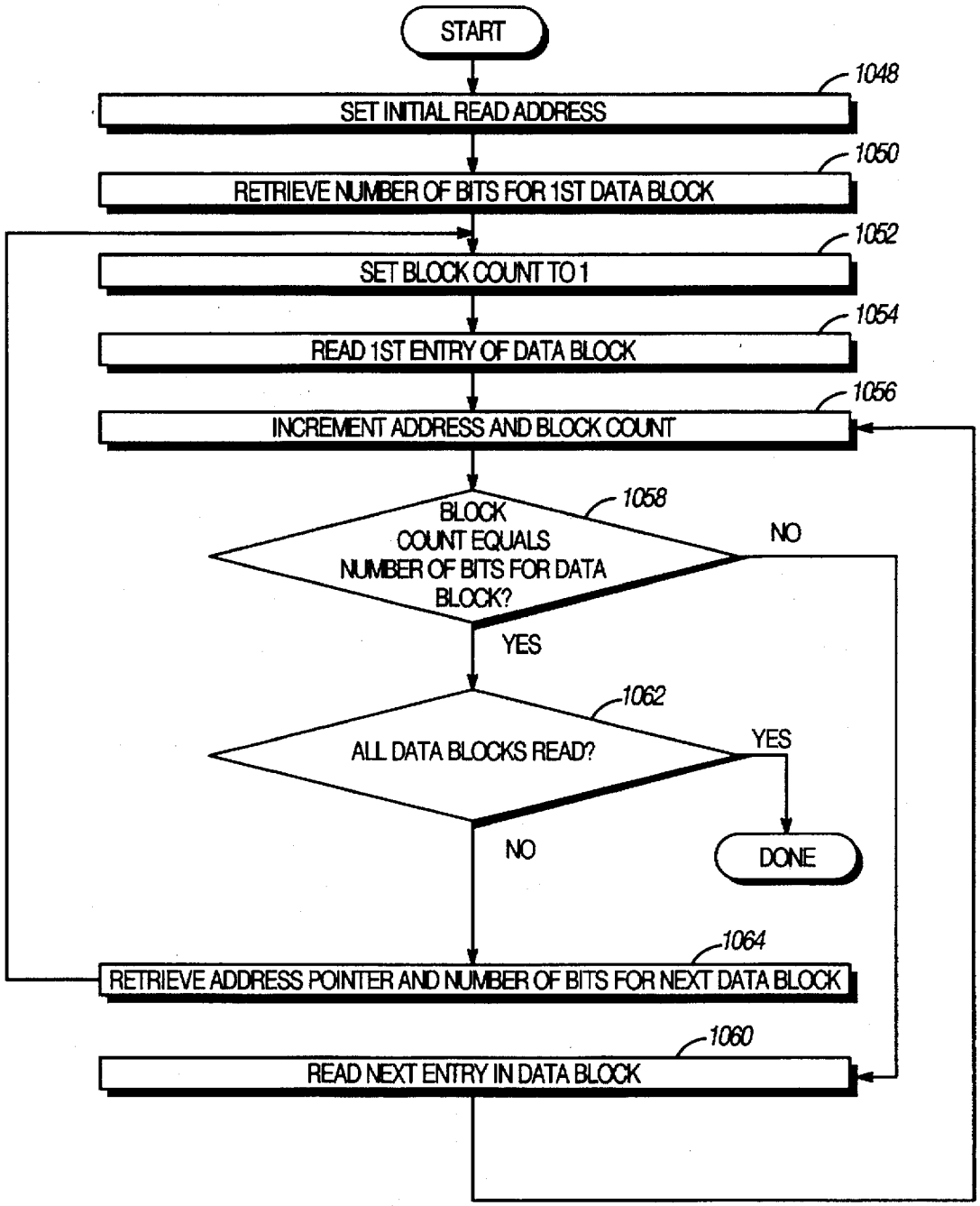
START
1048
SET INITIAL READ ADDRESS
1050
RETRIEVE NUMBER OF BITS FOR 1ST DATA BLOCK
1052
SET BLOCK COUNT TO 1
1054
READ 1ST ENTRY OF DATA BLOCK
1056
INCREMENT ADDRESS AND BLOCK COUNT
1058
BLOCK COUNT EQUALS NUMBER OF BITS FOR DATA BLOCK?
NO
YES
1062
ALL DATA BLOCKS READ?
YES
NO
DONE
1064
RETRIEVE ADDRESS POINTER AND NUMBER OF BITS FOR NEXT DATA BLOCK
1060
READ NEXT ENTRY IN DATA BLOCK

*FIG.49*

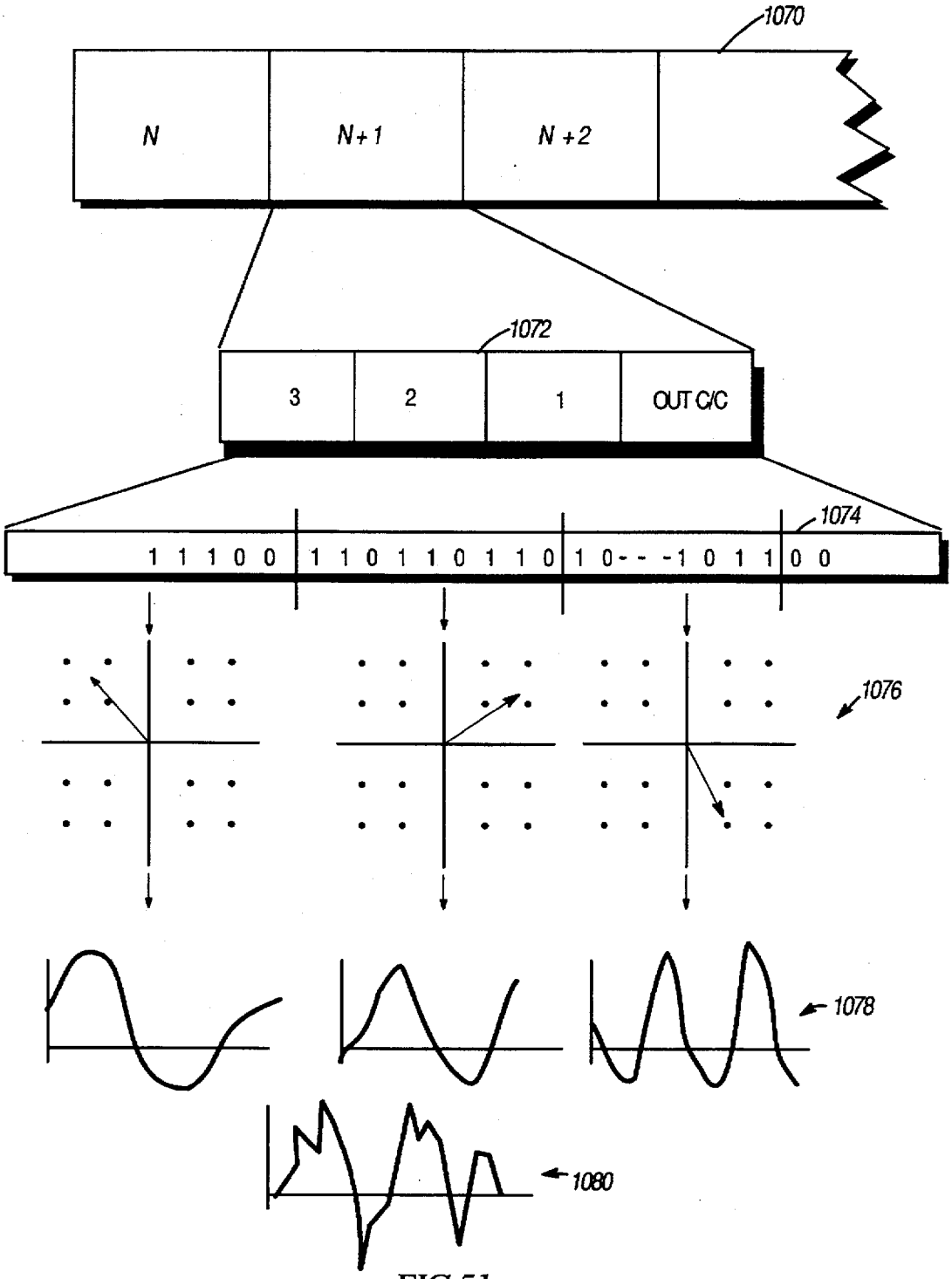
1070
N
N+1
N+2
1072
3
2
1
OUT C/C
1074
1 1 1 0 0 1 1 0 1 1 0 1 1 0 1 0- - -1 0 1 1 0 0
1076
1078
1080

FIG.51

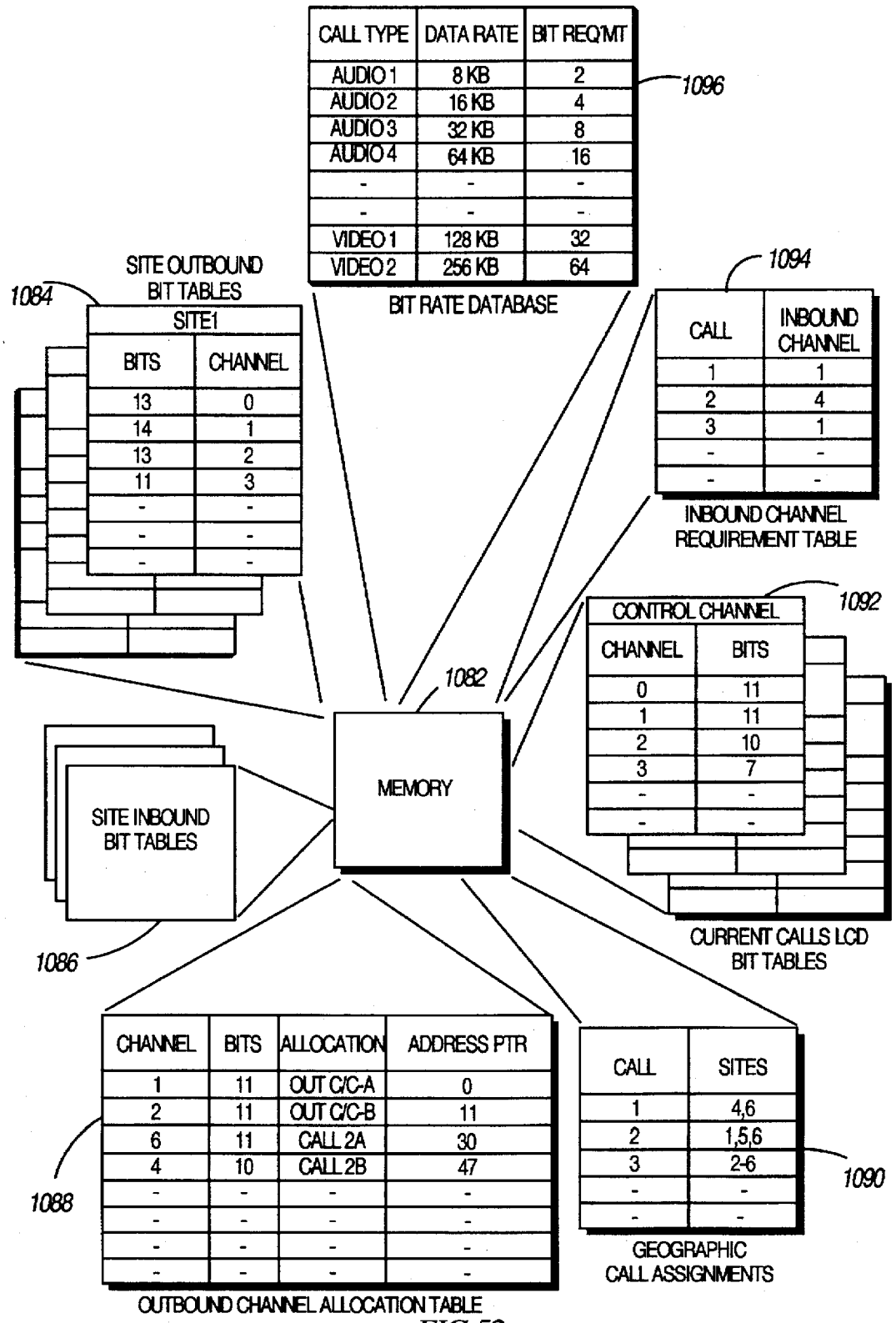
CALL TYPE | DATA RATE | BIT REQ'MT
AUDIO 1 | 8 KB | 2
AUDIO 2 | 16 KB | 4
AUDIO 3 | 32 KB | 8
AUDIO 4 | 64 KB | 16
VIDEO 1 | 128 KB | 32
VIDEO 2 | 256 KB | 64
BIT RATE DATABASE
1096
SITE OUTBOUND BIT TABLES
1084
SITE1
BITS | CHANNEL
13 | 0
14 | 1
13 | 2
11 | 3
1094
CALL | INBOUND CHANNEL
1 | 1
2 | 4
3 | 1
INBOUND CHANNEL REQUIREMENT TABLE
CONTROL CHANNEL
1092
CHANNEL | BITS
0 | 11
1 | 11
2 | 10
3 | 7
1082
MEMORY
SITE INBOUND BIT TABLES
1086
CURRENT CALLS LCD BIT TABLES
CHANNEL | BITS | ALLOCATION | ADDRESS PTR
1 | 11 | OUT C/C-A | 0
2 | 11 | OUT C/C-B | 11
6 | 11 | CALL 2A | 30
4 | 10 | CALL 2B | 47
1088
OUTBOUND CHANNEL ALLOCATION TABLE
CALL | SITES
1 | 4,6
2 | 1,5,6
3 | 2-6
1090
GEOGRAPHIC CALL ASSIGNMENTS

FIG.52

1098

| SITE 1 | |
|---|---|
| CHANNEL | BITS |
| 0 | 10 |
| 1 | 11 |
| 2 | 12 |
| 3 | 11 |
| 4 | 10 |
| 5 | 11 |
| 6 | 11 |
| 7 | 9 |
| 8 | 8 |
| 9 | 5 |

1100

| SITE 2 | |
|---|---|
| CHANNEL | BITS |
| 0 | 11 |
| 1 | 11 |
| 2 | 13 |
| 3 | 12 |
| 4 | 10 |
| 5 | 10 |
| 6 | 11 |
| 7 | 6 |
| 8 | 10 |
| 9 | 7 |

1102

| SITE 3 | |
|---|---|
| CHANNEL | BITS |
| 0 | 12 |
| 1 | 12 |
| 2 | 11 |
| 3 | 11 |
| 4 | 10 |
| 5 | 10 |
| 6 | 11 |
| 7 | 10 |
| 8 | 8 |
| 9 | 9 |

1104

| SITE 4 | |
|---|---|
| CHANNEL | BITS |
| 0 | 11 |
| 1 | 12 |
| 2 | 11 |
| 3 | 11 |
| 4 | 12 |
| 5 | 10 |
| 6 | 9 |
| 7 | 9 |
| 8 | 9 |
| 9 | 7 |

1106

| SITE 5 | |
|---|---|
| CHANNEL | BITS |
| 0 | 15 |
| 1 | 15 |
| 2 | 15 |
| 3 | 14 |
| 4 | 10 |
| 5 | 14 |
| 6 | 14 |
| 7 | 8 |
| 8 | 10 |
| 9 | 11 |

1108

| SITE 6 | |
|---|---|
| CHANNEL | BITS |
| 0 | 15 |
| 1 | 14 |
| 2 | 15 |
| 3 | 13 |
| 4 | 13 |
| 5 | 8 |
| 6 | 14 |
| 7 | 13 |
| 8 | 12 |
| 9 | 11 |

FIG.53

1110

| CHANNEL | BITS |
|---|---|
| 0 | 10 |
| 1 | 11 |
| 2 | 11 |
| 3 | 11 |
| 4 | 10 |
| 5 | 8 |
| 6 | 9 |
| 7 | 6 |
| 8 | 8 |
| 9 | 5 |

1112

| CHANNEL | BITS |
|---|---|
| 1 | 11 |
| 2 | 11 |
| 3 | 11 |
| 0 | 10 |
| 4 | 10 |
| 6 | 9 |
| 5 | 8 |
| 8 | 8 |
| 7 | 6 |
| 9 | 5 |

1114

| CHANNEL | BITS | ALLOCATION | ADDRESS PTR | BITS RED. |
|---|---|---|---|---|
| 1 | 11 | C/C | 0 | 0 |
| 2 | 11 | C/C | 11 | 0 |
| 3 | 0 | - | - | - |
| 0 | 0 | - | - | - |
| 4 | 0 | - | - | - |
| 6 | 0 | - | - | - |
| 5 | 0 | - | - | - |
| 8 | 0 | - | - | - |
| 7 | 0 | - | - | - |
| 9 | 0 | - | - | - |

*FIG.54*

1116

| CHANNEL | BITS | ALLOCATION |
|---|---|---|
| 0 | 15 | C/C |
| 1 | 14 | C/C |
| 2 | 15 | |
| 3 | 13 | |
| 4 | 10 | |
| 5 | 8 | |
| 6 | 14 | |
| 7 | 8 | |
| 8 | 10 | |
| 9 | 11 | |

1120

| CHANNEL | BITS |
|---|---|
| 0 | 15 |
| 6 | 14 |
| 3 | 13 |
| 5 | 12 |
| 4 | 11 |
| 9 | 11 |
| 8 | 10 |
| | |
| 7 | 8 |
| | |

1118

1122

| CHANNEL | BITS | ALLOCATION | ADDRESS PTR | BITS RED. |
|---|---|---|---|---|
| 1 | 11 | C/C | 0 | 0 |
| 2 | 11 | C/C | 11 | 0 |
| 7 | 8 | 1 | 22 | 0 |
| 0 | 2 | - | - | - |
| 6 | 2 | - | - | - |
| 3 | 2 | - | - | - |
| 5 | 2 | - | - | - |
| 4 | 2 | - | - | - |
| 9 | 2 | - | - | - |
| 8 | 2 | - | - | - |

1124

| | | | | | | | | | |
|---|---|---|---|---|---|---|---|---|---|
| OUT C/C | OUT C/C | 1 | | | | | | | |

*FIG.55*

1126

| CHANNEL | BITS | ALLOCATION |
|---|---|---|
| 0 | 10 | |
| 1 | 11 | C/C |
| 2 | 11 | C/C |
| 3 | 11 | |
| 4 | 10 | |
| 5 | 10 | |
| 6 | 11 | |
| 7 | 6 | 1 |
| 8 | 8 | |
| 9 | 5 | |

1128

1130

1132

| CHANNEL | BITS |
|---|---|
| 3 | 11 |
| | |
| 6 | 11 |
| 0 | 10 |
| 4 | 10 |
| 5 | 10 |
| 8 | 8 |
| | |
| 9 | 5 |
| | |

1134

| CHANNEL | BITS | ALLOCATION | ADDRESS PTR | BITS RED. |
|---|---|---|---|---|
| 1 | 11 | C/C | 0 | 0 |
| 2 | 11 | C/C | 11 | 0 |
| 3 | 11 | 2A | 30 | 0 |
| 7 | 8 | 1 | 22 | 0 |
| 9 | 5 | 2B | 41 | 0 |
| 6 | 2 | - | - | - |
| 0 | 2 | - | - | - |
| 4 | 2 | - | - | - |
| 5 | 2 | - | - | - |
| 8 | 2 | - | - | - |

1136

| | | | | | | | | | |
|---|---|---|---|---|---|---|---|---|---|
| OUT C/C | OUT C/C | 2A | 1 | 2B | | | | | |

*FIG.56*

1138

| CHANNEL | BITS | ALLOCATION |
|---|---|---|
| 0 | 10 | |
| 1 | 11 | C/C |
| 2 | 11 | C/C |
| 3 | 11 | 2A |
| 4 | 10 | |
| 5 | 8 | |
| 6 | 9 | |
| 7 | 6 | 1 |
| 8 | 8 | |
| 9 | 5 | 2B |

1150

| CHANNEL | BITS |
|---|---|
| 0 | 10 |
| 4 | 10 |
| 5 | 8 |
| 6 | 9 |
| 8 | ~~8~~ |
| | 4 |
| | |
| | |
| | |
| | |

1140 1142 1144 1146 1148

1152

| CHANNEL | BITS | ALLOCATION | ADDRESS PTR | BITS RED. |
|---|---|---|---|---|
| 1 | 11 | C/C-A | 0 | 0 |
| 2 | 11 | C/C-B | 11 | 0 |
| 3 | 11 | 2A | 30 | 0 |
| 0 | 10 | 3A | 46 | 0 |
| 4 | 20 | 3B | 56 | 0 |
| 5 | 8 | 3C | 66 | 0 |
| 7 | 8 | 1 | 22 | 0 |
| 9 | 5 | 2B | 41 | 0 |
| 8 | 4 | 3D | 74 | 4 |
| 6 | 0 | - | - | - |

1154

| | | | | | | | | | |
|---|---|---|---|---|---|---|---|---|---|
| OUT C/C | OUT C/C | 2A | 3A | 3B | 3C | 1 | 2B | 3D | |

*FIG.57*

1156

| CHANNEL | BITS | ALLOCATION | ADDRESS PTR |
|---|---|---|---|
| 1 | 11 | C/C-A | 0 |
| 2 | 11 | C/C-B | 11 |
| 0 | 10 | 3A | 30 |
| 4 | 10 | 3B | 40 |
| 5 | 8 | 3C | 50 |
| 7 | 6 | 1 | 22 |
| 8 | 4 | 3D | 58 |
| 3 | 0 | - | - |
| 9 | 0 | - | - |
| 6 | 0 | - | - |

1158

| | |
|---|---|
| 0 | OUT C/C A |
| 11 | OUT C/C B |
| 22 | DATA 1 |
| 30 | DATA 3A |
| 40 | DATA 3B |
| 50 | DATA 3C |
| 58 | DATA 3D |
| 62 | |

FIG.58

NEW LCD FOR CALL 1

| CHANNEL | BITS |
|---|---|
| 0 | 13 |
| 1 | 14 |
| 2 | 14 |
| 3 | 13 |
| 4 | 10 |
| 5 | 11 |
| 6 | 9 |
| 7 | 7 |
| 8 | 11 |
| 9 | 9 |

1180

CALL 1

ORDERED BIT TABLE

| CHANNEL | BITS |
|---|---|
| 0 | 13 |
| 3 | 13 |
| 5 | 11 |
| 8 | 11 |
| 4 | 10 |
| 6 | 9 |
| 9 | 9 |
| 7 | 7 |
| | |
| | |

1182

CHANNEL ALLOCATION TABLE

| CHANNEL | BITS | ALLOCATION | ADDRESS PTR | BITS RED. |
|---|---|---|---|---|
| 1 | 11 | C/C-A | 0 | 1 |
| 2 | 11 | C/C-B | 11 | 1 |
| 0 | 10 | 3A | 30 | 1 |
| 4 | 10 | 3B | 40 | 0 |
| 5 | 8 | 3C | 50 | 2 |
| 6 | 8 | 1 | 22 | 1 |
| 8 | 4 | 3D | 58 | 4 |
| 3 | 0 | - | - | - |
| 7 | 0 | - | - | - |
| 9 | 0 | - | - | - |

1184

1186 NEW ASSIGNMENT

FIG.61

1160

| SITE 1 | |
|---|---|
| CHANNEL | BITS |
| 0 | 12 |
| 1 | 12 |
| 2 | 13 |
| 3 | 11 |
| 4 | 11 |
| 5 | 10 |
| 6 | 10 |
| 7 | 9 |
| 8 | 8 |
| 9 | 7 |

1162

| SITE 2 | |
|---|---|
| CHANNEL | BITS |
| 0 | 13 |
| 1 | 13 |
| 2 | 12 |
| 3 | 11 |
| 4 | 11 |
| 5 | 10 |
| 6 | 10 |
| 7 | 9 |
| 8 | 10 |
| 9 | 9 |

1164

| SITE 3 | |
|---|---|
| CHANNEL | BITS |
| 0 | 11 |
| 1 | 12 |
| 2 | 13 |
| 3 | 13 |
| 4 | 10 |
| 5 | 12 |
| 6 | 9 |
| 7 | 11 |
| 8 | 11 |
| 9 | 7 |

1166

| SITE 4 | |
|---|---|
| CHANNEL | BITS |
| 0 | 13 |
| 1 | 14 |
| 2 | 14 |
| 3 | 13 |
| 4 | 12 |
| 5 | 12 |
| 6 | 11 |
| 7 | 11 |
| 8 | 10 |
| 9 | 11 |

1168

| SITE 5 | |
|---|---|
| CHANNEL | BITS |
| 0 | 13 |
| 1 | 14 |
| 2 | 14 |
| 3 | 13 |
| 4 | 10 |
| 5 | 11 |
| 6 | 9 |
| 7 | 7 |
| 8 | 11 |
| 9 | 10 |

1170

| SITE 6 | |
|---|---|
| CHANNEL | BITS |
| 0 | 15 |
| 1 | 15 |
| 2 | 14 |
| 3 | 14 |
| 4 | 11 |
| 5 | 11 |
| 6 | 12 |
| 7 | 12 |
| 8 | 10 |
| 9 | 9 |

FIG.59

1172

| ALL SITES | | |
|---|---|---|
| CHANNEL | BITS | |
| 0 | 11 | 3A |
| 1 | 12 | C/C-A |
| 2 | 12 | C/C-B |
| 3 | 11 | |
| 4 | 10 | 3B |
| 5 | 10 | 3C |
| 6 | 9 | |
| 7 | 7 | |
| 8 | 8 | 1 |
| 9 | 7 | 3D |

1174

| ORDERED BIT TABLE | |
|---|---|
| CHANNEL | BITS |
| 1 | 12 |
| 2 | 12 |
| 0 | 11 |
| 3 | 11 |
| 4 | 10 |
| 5 | 10 |
| 6 | 9 |
| 8 | 8 |
| 7 | 7 |
| 9 | 7 |

1176

| LCD FOR CALL 3 | | |
|---|---|---|
| CHANNEL | BITS | |
| 0 | 11 | 3A |
| 1 | 12 | C/C-A |
| 2 | 12 | C/C-B |
| 3 | 11 | |
| 4 | 10 | 3B |
| 5 | 10 | 3C |
| 6 | 9 | |
| 7 | 7 | |
| 8 | 8 | 1 |
| 9 | 7 | 3D |

1178

| CHANNEL | BITS |
|---|---|
| 0 | 11 |
| 3 | 11 |
| 4 | 10 |
| 5 | 10 |
| 6 | 9 |
| 8 | 8 |
| 9 | 7 |

*FIG.60*

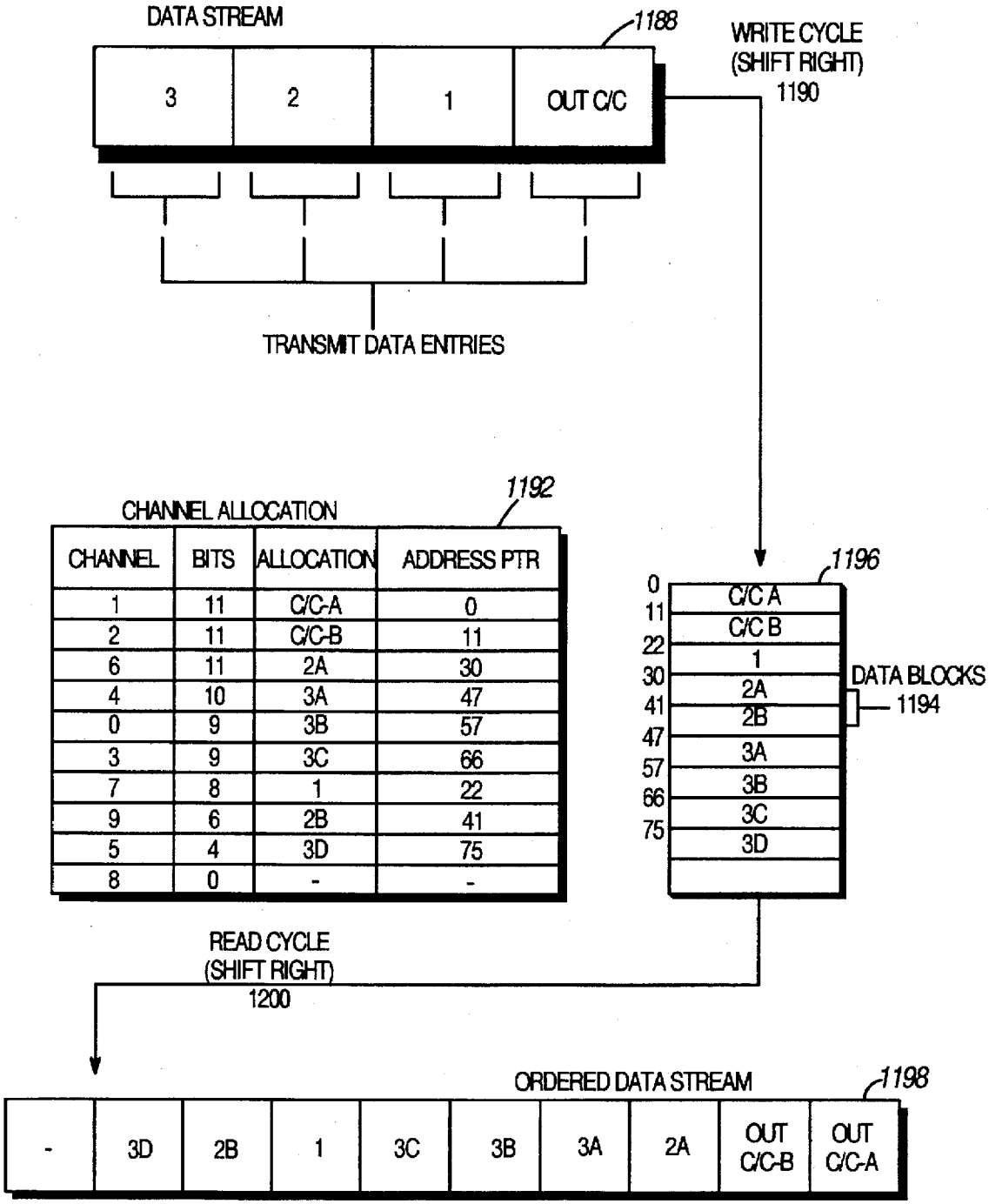


| CHANNEL | BITS | ALLOCATION | ADDRESS PTR |
|---|---|---|---|
| 1 | 11 | C/C-A | 0 |
| 2 | 11 | C/C-B | 11 |
| 6 | 11 | 2A | 30 |
| 4 | 10 | 3A | 47 |
| 0 | 9 | 3B | 57 |
| 3 | 9 | 3C | 66 |
| 7 | 8 | 1 | 22 |
| 9 | 6 | 2B | 41 |
| 5 | 4 | 3D | 75 |
| 8 | 0 | - | - |

*FIG.62*

# METHOD AND APPARATUS FOR PROVIDING INFRASTRUCTURE CALL SUPPORT

## CROSS REFERENCE TO RELATED U.S. APPLICATIONS

The present application is related to the following U.S. patent applications, all of which were filed on an even date herewith and are assigned to the assignee of the present application: Ser. No. 08/378,431 (now U.S. Pat. No. 5,539,777), entitled "Method And Apparatus For A DMT Receiver Having A Data De-formatter Coupled Directly To A Constellation Decoder"; Ser. No. 08/378,697, entitled "Method For Producing And Recovering A Data Stream For A DMT Transceiver"; Ser. No. 08/378,841 (now U.S. Pat. No. 5,495,483), entitled "Method and Apparatus For Allocating Carrier Channels"; Ser. No. 08/378,846 (now U.S. Pat. No. 5,521,906), entitled "Method And Apparatus For Updating Carrier Channel Allocations"; Ser. No. 08/378,847, entitled "Method And Apparatus For A DMT Transmitter Having A Data Formatter Coupled Directly To A Constellation Encoder"; Ser. No. 08/378,850, entitled "Method and Apparatus Of A Communications System Having A DMT Infrastructure"; and Ser. No. 08/381,602 (now U.S. Pat. No. 5,533,008), entitled "Method and Apparatus For Providing A Communication System Infrastructure".

## FIELD OF THE INVENTION

This invention relates generally to communication systems and more particularly to a communication system infrastructure.

## BACKGROUND OF THE INVENTION

The term "communication system" covers a variety of networks, devices, and systems that provide communication between a plurality of nodes. One such communication system is a two-way wireless communication system as shown in FIG. **1**. The two-way wireless communication system **10** includes a system controller **12**, a switch **14**, a plurality of base stations **16–20**, a plurality of communication resources **22–26**, and a plurality of communication units **28–32**. The plurality of base stations **16–20** are coupled to the switch **14** via wireline links **34–38**. These wireline links **34–38** are typically T1 links which have a bandwidth of approximately 1.5 megahertz and a capacity of 1.5 Mbps (mega-bits per second).

In operation, a communication unit transmits an inbound signaling word (ISW) via a wireless communication resource **22–26**, which has been designated as a control channel. One of the base stations **16–20** receives the ISW and transmits it via the T1 link **34–38** to the switch **14**. The switch provides the information to the system controller **12** which determines the validity of the request. For a valid request, the system controller grants the requested service, which may be a two-way wireless communication, a group call, a private call, or a telephone interface. Note that the communication units **28–32** may be any type of two-way wireless communication device, such as a mobile radio, a portable radio, a cellular telephone, or a cellular/mobile/portable radio telephone.

Having granted the request, the system controller **12** allocates a wireless communication resource **22–26** to the requesting communication unit. This information is sent out via the switch **14**, one of the T1 links **34–38**, and a base station **16–20**. With the allocation of a wireless communication resource, the requesting communication unit may perform its wireless, or RF (Radio Frequency), communication.



While the two-way wireless communication system **10** of FIG. **1** provides a variety of services to a communication unit, or subscriber unit, the infrastructure requires high bandwidth wireline transmission links between the switch **14** and the base stations **16–20**. As shown, these high bandwidth transmission links are typically T1 links which provides transmission capabilities of 1.5 Mbps. Alternatively, the links could be microwave links that provide an equivalent bandwidth as the T1 links.

Regardless of the type of link used, it must have a large bandwidth to convey large mounts of information between a base station and the switch. Because of the large amounts of information being conveyed, low frequency transmission lines, such as twisted pair copper telephone lines, cannot be used for these interconnections. Typically, a twisted pair copper wire telephone line has a bandwidth of 4 kilohertz. In two-way wireless communication systems, the intercoupling between the switch and base stations requires at least a 20 kilohertz bandwidth for a single data transfer. If multiple data transfers are occurring simultaneously, which is the typical case, the bandwidth requirements increase accordingly. Thus, based on these bandwidth requirements, the twisted pair copper telephone line does not provide adequate bandwidth.

Another type of communication system is illustrated in FIG. **2** as a one-way wireless communication system **40**. The one-way wireless system **40**, which may be a paging system, includes a system controller **42**, a switch **44**, wireline links **46–50**, a plurality of transmitters **52–56**, a plurality of communication resources **58–62**, and a plurality of communication units **64–68** or pagers. In operation, the system controller receives a request to transmit a page to at least one of the plurality of communication units **64–68**. Upon receiving this request, the system controller **42** generates a paging message which is transmitted to the switch **44** and subsequently routed via one of the wireline links **46–50** to the appropriate transmitter. Upon receiving the paging message, the transmitter transmits the message to the paging unit via one of the RF communication resources.

As with the two wire two-way wireless communication system **10** of FIG. **1**, the one way wireless system **40** requires a high bandwidth wireline link between the switch and the transmitters. Thus, a twisted pair copper telephone line, which has a bandwidth of approximately 4 kilohertz, will not provide the needed transmission capacity of the one-way wireless communication system **40**.

The two-way wireless system **10** and the one-way wireless system **40** each provide the communication unit with unique features. These unique features center around the fact that these wireless systems can transmit one communication to a plurality of receiving units. In other words, such wireless systems support one-to-many communications and/or many-to-one communications.

To enhance the transmit capabilities of a twisted pair copper telephone line, several techniques have been developed. For example Integrated Services Digital Network (ISDN) extends the bandwidth of a twisted pair copper telephone line from 4 kilohertz up to 200 kilohertz, which provides a transmission capability of 160 Kbps. Motorola part numbers MC145474, and MC145472 provide ISDN services. While these devices increase the bandwidth of a twisted pair telephone line, they are intended for one-to-one telephone communications. For example, the ISDN chips

may be used for video telephone conferencing, facsimile transmissions, and pair gain transmissions, where pair gain transmission is a multiplexing technique of several telephone calls on a single line.

Another technique which increases the transmission capabilities of a twisted pair copper telephone line is Asymmetrical Digital Subscriber Loop, or Link, (ADSL). An ADSL device increases the bandwidth of the twisted pair telephone line up to 1.1 megahertz, which provides transmission capabilities up to 9 Mbps. Similar to the ISDN technique, the ADSL technique is used for one-to-one communications and provides additional bandwidth over the ISDN devices.

FIG. **3** illustrates a typical ADSL two wire system. The ADSL two wire system **70** includes a video server **72**, which may be a camera, an asynchronous transfer mode (ATM) switch **74**, an ADSL transceiver **76**, a splitter **78**, a plain old telephone service (POTS) switch **80**, a twisted pair copper wire telephone line **82**, a second splitter **84**, a telephone **86**, a second ADSL transceiver **88**, and a television monitor **90**. In general, the first and second ADSL transceivers **76** and **88** communicate to establish a spectral response of the telephone line **82**. Having exchanged this information, a transmission can begin. In operation the video camera **72** will receive an image for teleconferencing and convert that image into digital information. The camera **72** routes the digital information to the ATM switch **74**, which, in turn, routes the digital information to the ADSL transceiver **76**. The ADSL transceiver converts the digital information into a Discrete Multi-Tone (DMT) symbol and conveys the DMT symbol to the other ADSL transceiver via the splitters **78**, **84** and the telephone line **82**. Upon receiving the DMT symbol, the second ADSL transceiver **88** recaptures the digital information and routes the digital information to the TV monitor **90**.

In addition to transmitting high bandwidth digital information, the ADSL two wire system **70** can also support regular telephone communications or POTS. This is done via the splitters **78** and **84** which route low frequency or POTS signals to the telephone **86** or the POTS switch **80** while routing the higher frequency signals to the ADSL transceivers.

FIG. **4** illustrates a frequency spectrum of carrier channels used in an ADSL system. The low frequency range, 0–4 kilohertz, is reserved for plain old telephone system (POTS) transmissions. The high frequency range, from 25 kilohertz to 1.1 megahertz, is used for ADSL transmissions. With this defined separation, the splitters **78**, **84** of FIG. **3** can easily separate the low frequency signals from the high frequency signals.

The high frequency range of FIG. **4** is divided into 256 carrier channels separated by approximately 4 kilohertz. The first 32 carrier channels in the range from 25 kilohertz to 138 kilohertz are full duplex channels while the 224 channels in the frequency range from 138 kilohertz to 1.1 megahertz are half duplex channels. For the 32 carrier channels in the full duplex range, echo cancellation must be incorporated in the splitters to ensure proper reception and transmission of the signals.

Each carrier channel can support up to 15 bits of QAM information. The actual amount of bits a carrier channel supports varies, however, due to the spectral response of the telephone line. For example, one carrier channel may be able to accommodate 15 bits while another may be only able to accommodate 4 bits. Due to ADSL requirements the minimum amount of bits a carrier channel can support, referred to as bit loading, is 2 bits and still carry data.

To determine the spectral response of the telephone line, the ADSL transceivers use an algorithm as shown in FIG. **5**. As shown, a first ADSL transceiver will transmit a wide band test signal to a second ADSL transceiver. Upon receipt, the second ADSL transceiver evaluates the received signal to determine the spectral response of the telephone line. Having the spectral response, the second ADSL generates a bit loading table and sends the bit loading table to the first ADSL transceiver. The bit loading table includes, for each carrier channel, a number of bits that the carrier channel can support.

FIG. **6** illustrates the transmit portion of the ADSL transceiver. As shown, the ADSL transmitter includes a multiplexer which receives a plurality of inputs via T1 links, ADSL control, an ISDN connection, and an HO link. Based on the ADSL control, the multiplexer provides one of the inputs to a constellation encoder via a fast path or an interleave path. The fast path includes a scramble cyclic redundancy check (CRC) block which is coupled to a forward error correction (FEC) block. The interleave path includes a scramble CRC, a forward error correction block, and an interleave block. The path selected depends on the level of burst error correction needed. If less error correction is needed, the fast path is selected, otherwise the interleave path is selected.

The constellation encoder encodes the received signals based on the bit loading table and an encoding sequence to produce an encoded data stream. The encoded data stream is then provided to the Discrete Multi-Tone (DMT) modulator which produces a DMT symbol from the encoded data stream. The DMT symbol is then transmitted to the receiver of the other ADSL transceiver via the telephone line.

FIG. **7** illustrates the receiver portion of the ADSL transceiver. As shown, the ADSL receiver includes a DMT demodulator which demodulates the DMT symbol to produce a demodulated signal. The demodulated signal is then provided to the constellation decoder which decodes the signal based on the bit loading information and a decoding sequence to recapture the transmitted data stream. The recaptured data stream is then provided to the demultiplexer via a fast path or deinterleave path. The de-multiplexer then provides recaptured data to the appropriate output line.

While the ADSL system increases the bandwidth of a telephone line, up to 1.1 megahertz, it is designed for one-to-one communications and not one-to-many or many-to-one communications. Therefore, a need exists for a one-to-many and/or many-to-one communication system infrastructure that utilizes existing telephone lines while providing the highly reliable service subscribers of wireless communication systems expect.

## BRIEF DESCRIPTION OF THE DRAWINGS

FIG. **1** illustrates a prior art two-way communication system;

FIG. **2** illustrates a prior art one-way wireless communication system;

FIG. **3** illustrates a prior art ADSL two wire communication system;

FIG. **4** illustrates a prior art representation of an ADSL frequency spectrum allocation;

FIG. **5** illustrates a prior art flow diagram for determination of bit loading information of a telephone line;

FIG. **6** illustrates a prior art schematic block of ADSL transmitter;

FIG. **7** illustrates a prior art schematic block diagram of ADSL receiver;

FIG. 8 illustrates a communication system in accordance with the present invention;

FIG. 9 illustrates a two-wire communication system in accordance with the present invention;

FIG. 10 illustrates a schematic block diagram of a primary site in accordance with the present invention;

FIG. 11 illustrates a secondary site in accordance with the present invention;

FIG. 12 illustrates a logic diagram for the overall operation of a primary site in accordance with the present invention;

FIG. 13 illustrates a flow diagram for an overall operation of a secondary site in accordance with the present invention;

FIG. 14 illustrates a logic diagram for obtaining bit loading information in accordance with the present invention;

FIG. 15 illustrates an exemplary process for obtaining bit loading information in accordance with the present invention;

FIG. 16 illustrates a logic diagram for determining an outbound control channel for the system of FIG. 8 in accordance with the present invention;

FIG. 17 illustrates an exemplary process for determining an outbound control channel in accordance with the present invention;

FIG. 18 illustrates a logic diagram for updating the outbound control channel in accordance with the present invention;

FIG. 19 illustrates a logic diagram for determining an inbound control channel for the system of FIG. 8 in accordance with the present invention;

FIG. 20 illustrates an exemplary allocation and utilization of an inbound control channel in accordance with the present invention;

FIG. 21 illustrates an alternative exemplary allocation and utilization of an inbound control channel in accordance with the present invention;

FIG. 22 illustrates a logic diagram for updating the inbound control channel in accordance with the present invention;

FIG. 23 illustrates a logic diagram for establishing an infrastructure for a call in accordance with the present invention;

FIG. 24 illustrates an alternative logic diagram for establishing a call in the system of FIG. 8 or FIG. 9 in accordance with the present invention;

FIG. 25 illustrates another alternative embodiment for establishing a call within the system of FIG. 8 or FIG. 9 in accordance with the present invention;

FIG. 26 illustrates a logic diagram that may be used to implement carrier channel allocations in accordance with the present invention;

FIG. 27 illustrates an alternate logic diagram that may be used to implement carrier channel allocations in accordance with the present invention;

FIG. 28 illustrates a logic diagram that may be used to generate an ordered bit loading table in accordance with the present invention;

FIG. 29 illustrates another alternate logic diagram that may be used to implement carrier channel allocations in accordance with the present invention;

FIG. 30 illustrates a logic diagram that may be used to update carrier channel assignments in accordance with the present invention;

FIG. 31 illustrates a logic diagram that may be used to update bit loading tables in accordance with the present invention;

FIG. 32 illustrates an alternate logic diagram that may be used to update carrier channel assignments in accordance with the present invention;

FIG. 33 illustrates a logic diagram that may be used to update carrier channel assignments for a control channel in accordance with the present invention;

FIG. 34 illustrates a functional block diagram of a DMT transmitter in accordance with the present invention;

FIG. 35 illustrates a schematic block diagram of a data formatter of the DMT transmitter in accordance with the present invention;

FIG. 36 illustrates a schematic block diagram of an ADSL transmitter coupled to a data formatter in accordance with the present invention;

FIG. 37 illustrates a schematic block diagram of an ADSL data interface coupled to an ADSL transmitter in accordance with the present invention;

FIG. 38 illustrates a logic diagram that may be used to implement a DMT transmitter in accordance with the present invention;

FIG. 39 illustrates an alternative logic diagram that may be used to implement a DMT transmitter in accordance with the present invention;

FIG. 40 illustrates a functional block diagram of a DMT receiver in accordance with the present invention;

FIG. 41 illustrates a schematic block diagram of a data deformatter of the DMT receiver in accordance with the present invention;

FIG. 42 illustrates a schematic block diagram of an ADSL receiver coupled to a data de-formatter in accordance with the present invention;

FIG. 43 illustrates a schematic block diagram of an ADSL data interface coupled to an ADSL receiver in accordance with the present invention;

FIG. 44 illustrates a logic diagram that may be used to implement a DMT receiver in accordance with the present invention;

FIG. 45 illustrates an alternative logic diagram that may be used to implement a DMT receiver in accordance with the present invention;

FIG. 46 illustrates a logic diagram that may be used to generate addresses for the data formatter and/or the data de-formatter in accordance with the present invention;

FIG. 47 illustrates an alternative logic diagram that may be used to generate addresses for the data formatter and/or the data de-formatter in accordance with the present invention;

FIG. 48 illustrates a logic diagram that may be used to generate address pointer information for the data formatter and/or the data de-formatter in accordance with the present invention;

FIG. 49 illustrates another alternative logic diagram that may be used to generate addresses for the data formatter and/or the data de-formatter in accordance with the present invention;

FIG. 50 illustrates an alternative logic diagram that may be used to generate address pointer information for the data formatter and/or the data de-formatter in accordance with the present invention;

FIG. 51 illustrates an example of a DMT symbol formation in accordance with the present invention;

FIG. 52 illustrates database information stored in memory in accordance with the present invention;

FIGS. 53–61 illustrate an example of carrier channel allocation in accordance with the present invention; and

FIG. 62 illustrates a data flow diagram in accordance with the present invention.

## DETAILED DESCRIPTION OF THE DRAWINGS

Generally, the present invention provides a method and apparatus for establishing a communication system infrastructure utilizing low pass transmission path, i.e. twisted pair telephone line. This may be accomplished by providing a primary site which includes a controller, a data multiplexing switch, a DMT transmitter and a DMT receiver. The primary site is coupled to a plurality of secondary sites via low pass transmission paths. Each of the secondary sites includes a secondary DMT receiver, a secondary DMT transmitter, a secondary DMT data multiplexing switch, a site controller and at least one subscriber interface.

The primary site communicates with the plurality of secondary sites via inbound and outbound low pass transmission paths. This is done via the respective DMT receivers and DMT transmitters, wherein the DMT transmitter transmits information over a plurality of carrier channels to a targeted DMT receiver. The information transmitted may be control information, i.e., the co-ordination information used by the primary site and the secondary sites to establish data transfers, or user information, i.e., the information intended for a subscriber of the communication system. To convey this information, the DMT transmitter formats the user information and then converts it into DMT symbols, which is the actual information transmitted over the low pass transmission path. The DMT receiver receives the DMT symbols, and deformats them to recapture the original information.

Before any information can be transmitted, an inbound control channel and an outbound control channel must be established over the low pass transmission paths. The inbound and outbound control channels established on the low pass transmission path are different than the control channels established in an RF communication system. The control channels of the RF communication system are used to convey communication system operational information to the subscribers of the system. For example, a request for a call, RF communication resource allocation, request deny, status inquiries and responses are all forms of communication system operational information that are transmitted over the RF control channels. The control channels established on the low pass transmission paths are used to convey system infrastructure information between the primary site and the secondary sites and to route the communication system operational information to the sites such that the operational information may be subsequently transmitted to the subscribers.

The outbound control channel for the system infrastructure is generally established when the primary site transmits a training signal to each of the plurality of secondary sites. Upon receiving the training signal, each of the secondary sites performs a spectral response analysis of the outbound low pass transmission path based on the training signal and then creates bit loading information. In a sequential order, the primary site requests and stores the bit loading information from each of the secondary sites, wherein the bit loading information is stored in a site bit loading table.

Having stored the bit loading information for all of the secondary sites, the primary site generates a lowest common denominator (LCD) bit loading table as a compilation of all of the site bit loading tables. From the LCD bit loading table and bandwidth requirements for the outbound control channel, the primary site selects at least one outbound carrier channel of the plurality of carrier channels to function as the outbound control channel.

The inbound control channel is established in a similar way as the outbound control channel except the primary site requests the training signal from the secondary sites. Upon receiving the request, each of the secondary sites responds in a sequential order. When the primary site receives the training signal from a secondary site, the primary site performs a spectral response on the inbound low pass transmission path based on the training signal. From the spectral response, the primary site generates a bit loading table for the site. Once a bit loading table for all of the secondary sites has been generated, the primary site generates an inbound control channel LCD bit loading table. From this table the primary site selects, based on bandwidth requirements, inbound carrier channels to function as the inbound control channel.

Once the control channels are established, the system may provide call services, where a call service includes the transmission of user information. When the primary site receives the call request, it determines the target sites involved in the requested call. Having identified the target sites, the primary site retrieves the site bit loading table for each target site and generates a lowest common denominator (LCD) call bit loading table for this particular call. From the call bit loading table and bandwidth requirements for this particular call, the primary site allocates carrier channels to provide the infrastructure for this particular call. In other words, the primary site is selecting which outbound carrier channels will convey the user information from the primary site to the targeted secondary sites and the inbound carrier channels that will convey the user dam from the targeted secondary sites to the primary site.

FIG. 8 illustrates a communications system **100** having a four wire infrastructure. The communication system **100** includes a primary site **102**, a plurality of secondary sites **104–108** interoperably coupled to the primary site via at least one inbound low pass transmission path **148** and at least one outbound low pass transmission path **150**. The primary site **102** includes a controller **110**, a DMT (Discrete Multi Tone) receiver **112**, a DMT transmitter **114**, a data multiplexing switch **116**, and an input/output port **118**. Note that, if the secondary sites are separated by more than a given geographic distance (12 Kft to 18Kft) from the primary site, repeaters **144**, **146** may be required.

Each of the secondary sites **104–108** include a secondary site controller **120**, a secondary DMT receiver **122**, a secondary DMT transmitter **124**, a secondary data multiplexing switch **126** and at least one subscriber interface **128**. The subscriber interface may be coupled to a radio frequency (RF) transceiver **140**, an RF transmitter **136**, a facsimile device **130**, a telephone **132**, or a television monitor **134**. A detailed discussion of the secondary site will be provided below with reference to FIG. **11**.

The general operation of communication system **100** begins by establishing an inbound control channel on the inbound low pass transmission path **148** and an outbound control channel on the outbound low pass transmission path **150**. Establishing the inbound and outbound control channels will be discussed in greater detail with reference to FIGS. **16–22**.

Once the infrastructure control channels (i.e., the inbound and outbound control channels) are established, user infor-

mation may be transmitted to a subscriber. This is accomplished when the primary site receives a call request that identifies a targeted subscriber. The targeted subscriber may be a communication unit **142**, a pager unit **138**, a facsimile unit **130**, a telephone **132**, a television **134**, or any other type of device that can receive digital information. Upon receipt of the call request, the primary site **102** determines the location of the target subscriber units. Having determined the targets locations, the primary site allocates carrier channels of the inbound and outbound low pass transmission paths **148**, **150** depending on the type of call requested and the bandwidth requirements for the call. For example, for a one way data transmission, the primary site only needs to allocate carrier channels on the outbound low pass transmission path **150**, while, for a two way data transmission, the primary site would need to allocate carrier channels in both the inbound and outbound low pass transmission paths **148**, **150**.

To allocate the carrier channels, the primary site generates an inbound call bit loading table from the inbound site bit loading tables of the target sites and an outbound call bit loading table from the outbound site bit loading tables of the target sites. From the call bit loading tables and the bandwidth requirements of the call, the primary site selects the carrier channels to support the call. Once the carrier channels have been selected, identity of the carrier channels are sent to the targeted secondary sites via the outbound carrier channels supporting the outbound control channel. Note that establishing carrier channels to support a particular call provides a temporarily designated communication path between the primary sites and the targeted secondary sites for this call. Thus, the infrastructure links of the present communication system are trunked to support a variety of calls which is in contrast to the dedicated links of prior art communication systems.

In addition to allocating carrier channels of the low pass transmission paths **148**, **150**, the primary site may need to allocate transmission resources within the secondary sites to provide a communication path between the subscriber and the secondary site. For example, in a two-way wireless communication system, the primary site will allocate an RF communication resource in each secondary site supporting a two-way wireless communication. The control information identifying which RE communication resources have been allocated will be transmitted to the secondary sites via the outbound carrier channels functioning as the outbound control channel.

Once the secondary sites have received and stored the carrier channel allocation information, and any RF communication resource allocation information, the primary site **102** may transmit user information to the targeted secondary sites via the allocated carrier channels. Upon receiving the user information, the secondary sites can route the data to the targeted subscriber via the allocated RF communication resource. Additionally, the primary site, for a two-way communication, may receive user information via the allocated inbound carrier channels. Upon receipt of this information, the primary site may retransmit this information to the targeted secondary sites via the allocated outbound carrier channels.

FIG. **9** illustrates a communication system **160** having a two-wire infrastructure. As shown, the primary site **102** is operably coupled to a plurality of secondary sites **104–108** via a twisted pair low pass transmission path **162**. The low pass transmission path is a twisted pair copper wire, which may be a telephone line. The basic interconnections of communication system **160** are very similar to the interconnections of communication system **100**. A difference arises in that communication system **160** includes only one low pass transmission path, while communication system **100** includes at least inbound and outbound low pass transmission paths. Because of this difference, the primary site **102** and each secondary site include a two-wire to four-wire conversion hybrid **164–170** to split inbound and outbound transmissions. In addition, the conversion hybrid provides echo cancellation such that data being transmitted via the DMT transmitter is removed from the data being received by the DMT receiver. The two-wire to four-wire conversion hybrids **164–170** may comprise a transformer having a primary winding and at least one secondary winding and echo cancellation circuitry.

FIG. **10** illustrates a schematic block diagram of the primary site **102**. The primary site **102** includes a controller **110**, data multiplexing switch **116**, the DMT transmitter **114**, the DMT receiver **112**, memory **182**, input/output port **118**, input/output port **183**, a data bus **176**, a control bus **178**, and an address bus **180**. The controller **110** includes a processor **172** and memory **174**. In practice, the controller **110** may be a micro-computer, a personal computer, a work station, or main frame computer. Whichever type of processing device is used as the controller **110**, it should have sufficient processing power and memory to execute the primary site functions described throughout this specification.

In operation, the primary site determines, for data transmissions (calls), inbound and outbound carrier channel allocations for the inbound and outbound control channels; determines inbound site bit loading information for the plurality of secondary sites, i.e., the bit loading table for sites based on the spectral response of the inbound low pass transmission path; determines call bit loading tables, i.e., the bit loading tables that are based on a set of targeted secondary sites; determines carrier channel updates; and determines data processing for the system. Each of these function will be discussed in greater detail below.

The primary site may receive a request for data transmission from a variety of sources within the communication system and/or a variety of sources external to the system. Requests from external sources may be for a page, a facsimile, a telephone interconnect, or any type of controlling data transfer such as a data distributor's request to send data to a particular subscriber. To receive requests from the external sources, the primary site would include additional input/output ports. For example, the primary site would include a public switched telephone network (PSTN) interconnection to support telephone interconnect operations and to transceive facsimiles.

For requests that are received from within the communication system, the requests are from the carrier channels designated as the inbound control channel of the inbound low pass transmission path **148** by the DMT receiver **112**. The DMT receiver **112** may provide, under the control of the controller **110**, the request to memory **182** or to the data bus **176**. The memory **182**, which may be RAM (Random Access Memory), disk drive, magnetic tape, reel-to-reel, or any other type of digital storage means, stores information received from the DMT transceiver or any other information which the controller **110** places within the memory. Note that if memory **174** is of a sufficient size, memory **182** may not be required. The DMT transceiver **112** will be discussed in greater detail below with reference to FIGS. **40–45**.

The controller **110** obtains the request either by reading the request directly from the data bus **176** or by reading the request from memory **182**. Once the request is obtained, the

controller **110** determines the type of service, or data transfer, being requested and the identity of the requesting subscriber. The request (or call request) may be for a two-way wireless communication, a paging request, a facsimile transmission, a POTS telephone call, a video data transfer, an audio data transfer, a data file transfer, or any other type of transmission of digital information that the communication system can support.

Having extracted the requesting unit's identity and the type of service being requested, the controller **110** determines whether the requesting unit is a valid user of the system. When the user has been validated the controller then determines whether this particular unit is authorized to receive the service requested. When the unit is authorized to receive the requested service, the controller **110** begins to process the request such that it may be fulfilled. In general, to fulfill the requested service, the controller **110** must first allocate carrier channels on the outbound low pass transmission path **150** (and the inbound transmission path **148** for two-way data transfers). Generally, carrier channel allocation is accomplished by retrieving the site bit loading tables for each site supporting one of the target units (i.e., target sites) and creating a call bit loading table for this particular call. Having created the call bit loading table, the controller determines, based on bandwidth requirements of the call (data transfer), the carrier channel allocations. A further discussion of carrier channel allocation will be presented below with reference to FIGS. **26–29**.

Once the carrier channels are allocated, the controller **110** sends a carrier channel allocation message to the target sites via the carrier channels designated as the outbound control channel for the infrastructure. After informing the targets sites of the carrier channel allocation, the controller **110** obtains the requested data. The requested data may be obtained from an external data base **170**, from an internal database, from the system manager **184**, or from a source within the communication system. The external database **170**, or the internal database, may store digital video information, digital audio information, data files, or any other type of digital information that may be of service to a subscriber. A source within the communication system may be one of the subscribers (e.g., a communication unit **142**, a pager unit **138**, a facsimile unit **130**, a telephone **132**, a television **134**, or any other type of device that can receive digital information) affiliated with the system. For example, the communication unit **142** may transmit a digitized audio message (or an analog audio message) via an RF communication resource to an RF transceiver (base station) affiliated with a secondary site. The secondary site processes the digitized audio message into a DMT symbol and places it on a carrier channel designated as the inbound control channel.

Regardless of how the requested data was obtained, the controller **110** routes the requested data to the data multiplexing switch **116**. The data multiplexing switch **116**, which may be a TDMA (Time Division Multiplexing Access) switch, processes the data into a time frame manner. For example, the data multiplexing switch processes the requested data as a data entry in a TDM frame. Generating a TDM frame of a plurality of data entries is a well known process to one skilled in the art, thus no further discussion will be presented except to further explain the present invention. The TDM frame, and subsequent series of frames, is provided to the DMT transmitter **114**. The DMT transmitter, which will be discussed in greater detail below with reference to FIGS. **34–39**, transmits the data in the carrier channels of the outbound low pass transmission path **150**.

To further illustrate the operations of the primary site **102**, assume that a two way wireless communication has been requested. For this example, the two way wireless communication request would be received via the inbound low pass transmission path **148** in the carrier channel(s) designated as the inbound control channel. The request is received by the DMT receiver **112** which routes the request directly to the controller **110** or indirectly to the controller **110** via memory **182**. Upon receiving the request, the controller **110** determines whether the requesting communication unit is authorized to access the system and, if so, whether the requesting communication unit is authorized to access this particular service. If both inquiries are answered positively, the controller **110** determines whether a sufficient number of inbound carrier channels and outbound carrier channels are available. If yes, the controller **110** determines whether there is a sufficient number of RF communication resources available to support the requested two way wireless communication. If this inquiry is answered positively, the controller **110** allocates the inbound and outbound carrier channels and the RF communication resources for this particular call request.

Having made these allocations, the controller **110** transmits the allocations, via the carrier channels designated as the outbound control channel, to the target secondary sites. Each target secondary site stores the carrier channel allocation information and data transmission begins. Data transmissions may begin when a communication unit transmits an audio message to an affiliated RF transceiver which, in ram, routes a digitized representation of the audio message to a secondary site. The secondary site converts the digitized representation into a DMT symbol, or a plurality of DMT symbols, and transmits the DMT symbols in the inbound carrier channels allocated to support this particular call. The primary site receives the DMT symbols, reconstructs digitized representations, combines the reconstructed digitized representations with other digitized representations. The combined digitized representations are then transmitted to the DMT transmitter which converts the combined digitized representations into DMT symbols. The DMT symbols are placed on the carrier channels of the outbound low pass transmission path allocated for this call. The targeted secondary sites receive the DMT symbols, reconstruct the digitized representations and route the digital representations to the targeted subscribers. This process continues until the call ends.

FIG. **11** illustrates a schematic block diagram of a secondary site **108**. The secondary site **108** includes a site controller **120**, a data multiplexing switch **126**, a DMT transmitter **124**, a DMT receiver **122**, memory **190**, a data bus **196**, a control bus **198**, an address bus **200**, and a plurality of subscriber interfaces **128**. As shown, the subscriber interfaces **128** may be a base interface module **202**, a paging interface module **206**, an audio/visual interface **210**, a data interface **214**, or a plain old telephone system interface **218**. In operation, the DMT receiver **122** receives information from an outbound twisted pair **150** and either places that information within the memory **190** or places it on the data bus **196**. Received control information is placed on the data bus **196** and routed to the site controller **120**. The site controller includes a processor **192** and memory **194** and may be a personal computer, a work station, or a main frame computer system. Note that if memory **194** is of sufficient size memory **190** may not be needed.

Upon receiving the control information, the site controller **120** interprets the control information and determines whether an action is required by the secondary site. For

example, the control information may indicate that one of the subscriber units affiliated with the secondary site may be required to participate in a communication. Alternately, the control information may indicate that a POTS call has been received, data is to be transferred, an audio/visual data sequence has been received, or a paging request has been received. Regardless of what the control information indicates, it is stored in memory such that the secondary site controller can process, for the secondary site, the service. Thus, when call information is transmitted on carrier channels of the outbound low pass transmission path, the site controller **120** extracts the data from the appropriate carrier channels and routes it to the targeted subscriber.

As mentioned, the subscriber interfaces **128** can be of a variety of different types of interfaces. With a variety of subscriber interfaces, a secondary site can provide a variety of services to affiliated subscribers. For example, the base interface module **202** allows the secondary site to interface with an RF base station **204** such that subscribers affiliate with the secondary site can access two-way wireless communications. The paging interface module **206** allows the secondary site to interface with an RF paging station **208**. The audio/visual interfaces **210** allows the secondary site **108** to interface with a television set **212**, a cable box, a VCR, a virtual VCR, a teleconferencing interface, etc. The data interface **214** allows the secondary site **108** to interface with a facsimile machine **216**, a modem, or another type of digital interface device. The POTS interface **218** allows the secondary site **108** to interface with a telephone **220**.

The site controller **120**, based on the control information, addresses the appropriate subscriber interface such that data may be received or transmitted via the subscriber interface **128**. For example, assume that the control information indicates a paging instruction. Upon receiving the control information, the site controller interprets the paging instruction to determine which carrier channels are being used to carry the paging message and which particular subscriber units are to receive the paging message. Having received and interpreted the control information, the DMT receiver **122** subsequently receives the paging message in the appropriate carrier channel and routes it, under the control of the site controller **120**, to the paging interface module **206** via the data bus **196**. Upon receiving the paging message, the paging interface module **206** converts the paging message into an RF paging signal and transmits the RF paging signal to the appropriate RF paging station **208**.

As an alternative example, assume that the control information indicates a two way RF communication and a POTS communication. In this example, the site controller **120** stores the control information indicating the types of calls and the carrier channel which is carrying the information. When the DMT receiver **120** receives the call, it routes the data to the base interface module **202** and the POTS interface **218** under the control of the system controller **120**. Thus, the two way RF communication information is prepared by the base interface module **202** and routed to the appropriate subscriber units affiliated therewith. Similarly, the POTS interface **218** prepares the data and routes it to the telephone **220**.

Information may also be transmitted from the secondary site **108**. In this mode, the DMT transmitter **124** places data on allocated carrier channels of the inbound twisted pair **148**. To do this, the DMT transmitter **124** receives a digital data stream from the data multiplexing switch **126**. The DMT transmitter **124** converts the digital data stream into a plurality of DMT symbols. The plurality of DMT symbols are placed on the allocated carrier channels. A detailed discussion of the DMT transmitter **124** will be provided below which reference to FIGS. **35–39**.

FIG. **12** illustrated a logic diagram that may be used by the primary site to perform an overall system operation function. At step **230**, the primary site obtains outbound bit loading information from a plurality of secondary sites. This is generally done by providing a training signal to each of the plurality of secondary sites. The training signal is a DMT symbol comprised of a plurality of signals modulated on the each of the carrier channels having a constant magnitude. Each of the secondary sites calculate the bit loading information from a spectral response of the output transmission path, wherein the bit loading information indicates, for each carrier channel, the number of bits that the carrier channel can support. Then, in a sequential manner, the plurality of secondary sites provide the outbound site bit loading information to the primary site. The sequential order may be determined by the primary site or by a predetermined polling algorithm.

At step **232**, the primary site obtains inbound bit loading information from the plurality of secondary sites. This is done by sequentially requesting a second training signal from each of the secondary sites. Upon receiving the second training signal from a secondary site via the inbound transmission path, the primary site determines a spectral response of the inbound transmission path. From the spectral response, the primary site determines the inbound site bit loading information for this particular secondary site. Once the bit loading information is obtained for this secondary site, the primary site determines the inbound bit loading information for the remaining secondary sites.

At step **234**, the primary site utilizes the outbound bit loading information to establish an outbound control channel. This is generally done by determining, for each carrier channel within the bit loading tables, a lowest bit loading value, having obtained the lowest value for each carrier channel, a lowest common denominator (LCD) outbound control channel bit loading table is generated. From this LCD outbound control channel bit table, the primary site selects, based on bandwidth requirements of the control channel, at least one carrier channel to act as the outbound control channel. The outbound control channel bandwidth may be determined based on the type of system employing the system infrastructure of the present invention. For example, if the system transmits a substantial amount of data between the sites, the bandwidth requirements will be much greater than the bandwidth requirements for a system that has little data transmission between sites.

At step **236**, the primary site utilizes the inbound bit loading information to establish an inbound control channel. The primary site chooses the inbound control channel in a similar fashion as it chooses the outbound control channel. Note that the inbound and outbound control channels are being selected for the infrastructure of the system. These are not the RF control channels used by the subscriber units in a two way communication system or the control channel used in a paging RF system.

At step **238**, the primary site utilizes the inbound and outbound bit loading information to establish an infrastructure for a data transmission. In general, this is accomplished by first determining the number of sites involved in the data transmission and retrieving their respective site bit loading tables. From the site bit loading tables, a lowest common denominator call bit loading table is determined. From the LCD bit loading table for the particular data transmission, inbound and outbound carrier channels are allocated to the

data transmission based on the bandwidth requirements. Note that for a system infrastructure having only an outbound transmission path, the primary site would not normally allocate inbound carrier channels to the data transmissions.

FIG. 13 illustrates a logic diagram which may be used by the secondary site to perform overall system operation functions. At step **240**, the secondary site determines whether it has received a request for outbound bit loading information. If the answer is yes, the process proceeds to step **242** wherein the secondary site sends secondary bit loading information. Generation of the outbound bit loading information is done upon receiving a training signal from the primary site and calculating a spectral response of the outbound transmission path. From the spectral response, bit loading for each carrier channel is determining and compiled into an outbound site bit loading table.

If the secondary site has not received a request for outbound bit loading information, it proceeds to step **246** where it is determined whether it has received a request to transmit a second training signal. If the answer is yes, the process proceeds to step **248** wherein the secondary site transmits a second training signal to the primary site. The second training signal is a DMT symbol comprised of a plurality of signals modulated on each of the carrier channels having a constant magnitude.

If the secondary site has not received a request to transmit a training signal, the process proceeds to step **250** where it determines whether it has received a bit loading table. If the answer is no, the process proceeds back to step **240** and waits in a continuous loop until a request for outbound bit loading information is received, a request to transmit a second training signal is received, or the secondary site receives bit loading information. When the secondary site receives bit loading information, the process proceeds to step **252** where the secondary site stores the bit loading information. The bit loading information is received from the primary site and typically comprises an LCD call bit loading table.

Having stored the bit loading information, the process proceeds to step **254** where the secondary site determines whether it has received channel allocation information. If the answer is no, the process proceeds back to step **240**. If, however, the answer is yes, the process proceeds to step **256** where the secondary site determines whether the channel allocation information contains any relevant information for the secondary site. The channel allocation information will contain relevant information for the secondary site when information is to be transmitted to one of the subscribers affiliated with this secondary site. For example, if a two way wireless cellular telephone is affiliated with the secondary site, and the channel allocation information has the cellular telephone involved in a communication, the channel allocation information will contain relevant information for the secondary site. Having determined that the channel allocation information contains relevant information for the secondary site, the process proceeds to step **258** where the relevant information is routed to an affiliated target or a subscriber unit.

FIG. 14 illustrates a logic diagram that the primary site may utilize to determine the inbound bit loading information and the outbound bit loading information. At step **260**, the primary site transmits a first training signal to all secondary sites. The training signal is a multi-frequency signal having a fixed amplitude. For example, the training signal may be a plurality of sinusoid signals having a constant amplitude wherein the frequency of each of the sinusoidal signals equates to a carrier channel frequency in the ADSL bandwidth. For example, one sinusoidal signal will have a frequency of 25 kilohertz, a second signal will have a frequency of approximately 29 kilohertz, a third signal will have a frequency of approximately 33 kilohertz, wherein each of the remaining sinusoidal signals will be increased by approximately four kilohertz up to approximately 1.1 megahertz. Thus, there will be up to 256 signals combined into a DMT symbol, which is transmitted as the training signal.

In step **262**, each of the secondary sites receives the first training signal and determines a spectral response of the outbound transmission path. From the spectral response, an outbound bit loading table for a plurality of outbound carrier channels is generated. The spectral response is determined by analyzing each of the plurality of sinusoidal signals of the training signal. In essence, the secondary site determines the magnitude, and/or phase of the received sinusoidal signal and compares it to the magnitude and phase of the known transmitted sinusoidal signal. From the differences that occur, a spectral response can be obtained for an individual sinusoidal signal of the training signal. The individual sinusoidal signal corresponds to a carrier channel. From the spectral response, the secondary site can then calculate the bit loading for this particular carrier channel. For example, if the sinusoidal signal for a particular carrier channel had very little degradation from its transmitted signal, the carrier channel can handle a maximum number of bits. For an ADSL system, the maximum bits a carrier channel can accommodate per frame is 15 bits. Thus, as the quality of the transmission path decreases, the number of bits of a particular carrier channel can accommodate, or bit loading, decreases. Per ADSL requirements, the minimum number of bits a channel can accommodate is two bits. Thus, if the spectral response of a particular carrier channel is so poor that it would only accommodate 1 bit, this particular carrier channel is set to a bit loading of zero.

At step **264**, the primary site begins collecting the outbound site bit loading tables from the sites by starting with a first secondary site. To retrieve the site bit loading table from the first secondary site, the primary site sends a request message to the secondary site wherein, upon receiving the request message, the secondary site responds with its bit loading table. Upon receiving the bit loading table from the first secondary site, the primary site stores it and then proceeds to step **266** where it requests the outbound bit loading table from another secondary site. At step **268**, the next secondary site transmits the outbound bit loading table to the primary site wherein the primary site stores the outbound bit loading table as shown in step **270**.

To collect inbound bit loading information from a secondary site, the primary site transmits a second training signal request to a secondary site. This is shown in step **272**. The second training signal is similar to the first training signal in that it contains a plurality of sinusoidal signals separated in frequency by approximately 4 kilohertz starting at 25 kilohertz up to a frequency of 1.1 megahertz.

Upon receiving this request, a secondary site transmits the second training signal to the primary site, which is shown at step **274**. Upon receiving the second training signal, the primary site determines an inbound bit loading table for a plurality of inbound carrier channels based on the spectral response of the secondary training signal, which is shown at step **276**. In addition, at step **276**, the primary site stores the inbound bit table for that particular secondary site. The primary site calculates the spectral response in a similar fashion as the secondary sites calculated the spectral

response of the first training signal. Having stored the inbound bit loading table and outbound bit loading table for a secondary site, the primary site determines at step **278** whether is has obtained the inbound and outbound bit loading tables for all of the secondary sites. If not, the process repeats at step **266** for a subsequent secondary site and continues in this loop fashion until the primary site has the inbound and outbound bit loading table for all of the secondary sites. Having done this, the process is complete.

FIG. **15** illustrates the process of obtaining the outbound bit loading tables from a plurality of secondary sites. As shown, the primary site **102** transmits a training signal **280** to a plurality of secondary sites **104–106**. The training signal **280** is shown in the frequency domain or spectral response. As mentioned above, the training signal **280** contains a plurality of sinusoidal signals having the same amplitude but separated in frequency by 4 kilohertz. The starting frequency of the training signals may be 4 kilohertz or 25 kilohertz and runs up to 1.1 megahertz.

The first secondary site **104**, upon receiving the training signal, generates a spectral response for each of the sinusoidal signals of the training signal **280**. From the spectral response, the secondary site determines a bit loading for each of the carrier channels to produce a bit loading table **282**. As shown, the bit loading table of the first secondary site **104** has some carrier channels having more bit loading capabilities while others have less. Lower bit loading capabilities result from the transfer function of the outbound transmission path at particular carrier channels having more attenuation than other carrier channels which have less attenuation.

The second secondary site **106** calculates a similar bit loading table and provides the bit loading table back to the primary site **102**. Note that the bit loading information from the first secondary site **104** is considerably different than the bit loading information from the second secondary site **106**. This occurs due to different characteristics in the transmission path between the primary site and the first secondary site **104** and the transmission path between the primary site and the second secondary site **106**. Typically, the first secondary site **104** and the second secondary site **106** will be separated by a significant amount or geographical difference such that the characteristic impedance of the transmission path connecting the particular secondary sites to the primary site will be different.

FIG. **16** illustrates a logic diagram which the primary site may utilize to select an outbound control channel. At step **290**, the primary site copies the outbound bit loading table of a first secondary site to an outbound control channel bit loading table. The outbound control channel bit loading channel at this stage is identical to the outbound bit loading table of the first secondary site, thus, it contains the number of bits that a particular carrier channel can accommodate for each of the plurality of carrier channels, which, for an ADSL system, is 256.

As step **292**, the primary site looks at a next secondary site's outbound bit loading table. At step **294**, the primary site starts with the first carrier channel entry in the outbound bit loading table of the next secondary site and the first carrier channel entry in the outbound control channel bit loading table. At step **296**, the bit loading, or bit numbers, for the first carrier channel entry in the respective outbound bit loading tables are compared. At step **298**, the lessor of the two bit numbers, or bit loading, is stored in the outbound control channel bit loading table. At step **300**, the primary site determines whether all of the carrier channel entries have been compared. When all of the carrier channels have not been compared, the process proceeds to step **302** where the next carrier channel entry in the outbound control channel bit loading table is compared with the corresponding entry in the next secondary site's bit loading table.

If, however, all of the carrier channels entries have been compared, the process proceeds to step **304** where the primary site determines whether it has compared the outbound control channel bit loading table with the outbound bit loading tables for all of the secondary sites. If the answer is no, the process proceeds to step **292** wherein the bit loading table of another secondary site is compared with an updated outbound control channel bit loading table.

If, however, the primary site has compared all of the bit loading tables of all of the secondary sites to obtain the outbound control channel bit loading table the process proceeds to step **306**. At step **306**, the primary site determines outbound control channel bandwidth requirements. As mentioned, each carrier channel may accommodate between 2 to 15 bits per frame. In an ADSL system, the frequency spectrum is transmitted once every 250 microseconds or at a 4 kilohertz rate. Thus, one particular carrier channel can accommodate a given bandwidth based on the frame duration. For example, assume that a particular carrier channel can accommodate 2 bits, at the 4 kilohertz rate, the carrier channel can support a call having a bandwidth of 8 Kbps (kilobits per second). Thus, if the outbound control channel requires a bandwidth of 32 kilobits per second, a carrier channel that can accommodate 8 bits is required, or a sum of carrier channels that can accommodate 8 bits is required, for the control channel.

Given the outbound carrier channel bandwidth requirements and accessing the outbound bit loading table, an outbound control channel is selected at step **308**. Having selected the outbound control channel, the primary site transmits a signal to all the secondary sites indicating the carrier channel allocations as the control channel. This is done at step **310**. In general, the outbound control channel is used to transmit control information from the primary site to the plurality of secondary sites. Having transmitted the control channel message to the secondary sites, the process is complete.

FIG. **17** is an illustrative example of how the outbound control channel bit loading table **338** is generated. Outbound bit loading tables for the plurality of sites are shown as outbound site bit loading tables **320–324**. Each of the outbound bit loading tables **320–324** contains a carrier channel field **326–330** and a bit loading field **332–336**. As mentioned, an ADSL system has 256 carrier channels such that each of the site bit loading tables **320–324** includes 256 carrier channel entries.

The outbound control channel bit loading table **338** is generated by comparing the bit loading, on a carrier channel by carrier channel basis, of all of the site bit loading tables. Thus, to begin producing the outbound control channel bit loading table **338**, the bit loading table for the first site **320** is copied as the outbound control channel bit loading table **338**. Next, a carrier channel by carrier channel comparison is made between the information stored in the outbound control channel bit loading table **338** and the outbound bit loading table of the remaining two sites **322**, **324**. Thus, comparing the bit loading of carrier channel **1** of site two with the bit loading information of carrier channel **1** in the outbound control channel bit loading table **338**, it is seen that the bit loading of carrier channel **1** in site two is less than the bit loading of channel **1** in site one. Thus, the outbound

control channel bit loading table **338** is updated with the lessor of the two bit loading values, or in this case, 12 bits as indicated in the site bit loading table **322** of site two.

Next, the bit loading for carrier channel **2** is compared between the site bit loading table **322** of site two and the outbound control channel bit loading table **338**. As seen, the bit loading for carrier channel **2** for the first and secondary sites is 13 bits. Note that from FIG. **17**, the outbound control channel bit loading table **338** has 12 bits for the bit loading of carrier channel **2**. This is due to the bit loading information of site three. As shown in site three, the bit loading for carrier channel **2** is **12**. This process continues on a carrier channel by carrier channel basis until the outbound control channel bit loading table **338** contains, for each carrier channel entry, the lowest bit loading value of all of the site bit loading tables.

Note that the comparison of bit loading information of all of the site bit loading tables may be done in a variety of ways. For example, all of the tables may be compared simultaneously to generate the outbound control channel bit loading table **338**. Alternately, the comparison may begin at control channel **256** or in any other manner. It should be readily apparent to one skilled in the art that there are a plurality of ways to generate the outbound control channel bit loading table **338** from the plurality of site bit loading tables **320–324**.

FIG. **18** illustrates a logic diagram that the primary site may utilize to update the outbound control channel. As is known, over time the transmission characteristics of the telephone line changes. Thus requiring the spectral response of the data line to be periodically updated. The ADSL standard dictates that once every 69 frames the training sequence be transmitted which may be used to update the bit loading. Thus, the spectral response of the transmission path is being updated every few hundred milliseconds.

At step **350**, the primary site begins the updating of the outbound control channel by periodically transmitting the first training signal to all of the secondary sites. As mentioned above the training signal comprises a plurality of sinusoidal signals having a similar amplitude but separated in frequency by approximately 4 kilohertz in the range of 25 kilohertz up to 1.1 megahertz. At step **352**, the secondary sites receive the first training signal and generate a new outbound bit loading table. The new outbound bit loading table may be separately stored from the existing outbound bit loading table or may overwrite the existing outbound bit loading table after changes are identified. Recall from the above discussion that the outbound bit loading table is generated from a spectral response of the transmission path as it receives the first training signal. The spectral response is then equated to the number of bits that a particular carrier channel can accommodate, which, in turn, is used to generate the outbound bit loading table.

At step **354**, each of the secondary sites compare the new outbound bit table to the old outbound bit loading table to identify any changes. At step **356**, the secondary sites generate a changed message indicating the identity of any changes. Note that the secondary site may generate a no change message if no changes have occurred or may simply omit generating a message entirely.

At step **358**, the primary site, in a sequential order, requests either the new bit loading table, or a change message from a first secondary site. At step **360**, the primary site sends a request to the secondary site for the change message which is transmitted by the secondary site at step **362**. At step **364**, the primary site receives the changes message and updates its outbound site bit loading table for the particular secondary site. At step **366**, the primary site determines whether it has updated the outbound bit loading tables for all of the secondary sites. If not, the process repeats at **360** until all of the outbound site bit loading tables have been updated. Once all of the outbound site bit loading tables have been updated, the primary site determines whether the outbound control channel bandwidth requirements are met by the current carrier channel allocations. This occurs at step **368**. If the bandwidth requirements are met the process is complete. If, however, the bandwidth requirements are not met the primary site reallocates carrier channel to redefine the outbound control channel. This occurs at step **370** and will be discussed in greater detail with reference to FIGS. **30–33**.

FIG. **19** illustrates a logic diagram that may be used to establish an inbound control channel **380**. At step **382**, a first inbound bit loading table of a secondary site is copied into an inbound bit loading table. This is a similar step as that done for the outbound control channel case described above. At step **384**, the bit loading table for a subsequent, or next, secondary site is retrieved. At step **386**, a comparison, which is done on a carrier channel by carrier channel basis, is made between the bit loading information of the inbound control channel bit loading table and the next secondary site bit loading table.

At step **388**, for the first carrier channel, the bit numbers, or bit loading, for this carrier channel is compared between the bit loading information in the inbound control channel bit loading table and the next secondary site bit loading table. At step **390**, the lessor of the two bit loading values is stored in the inbound control channel bit loading table. Thus, if the data already in the inbound bit control channel bit loading table is the lessor of the two values, that value remains, otherwise, the bit loading value for the next secondary site is stored in the inbound control channel bit loading table.

Having compared the bit loading of the first carrier channel entry in the inbound control channel bit loading table and the next secondary site bit loading table, the process proceeds to step **392**, where a determination is made as to whether all the carrier channel entries have been compared. When there are further carrier channel comparison to be made, the process proceeds to step **394** wherein the bit loading of the next carrier channel entry in the inbound control channel bit loading table and next secondary site bit loading table are compared as shown in step **388**. At step **390**, the lessor of the two bit loading values is stored in the inbound control channel bit loading table.

When the bit loading of all of the carrier channel entries of the next secondary site has been compared to the inbound control channel bit loading table, the process proceeds to step **396** where it is determined whether all of the secondary site bit loading tables have been compared to the inbound control channel bit loading table. If not, the process returns to step **384** where the next secondary site bit loading table is compared with the most current inbound control channel bit loading table.

If, however, all of the secondary site bit loading tables have been compared to the inbound control channel bit loading table, the process proceeds to step **398** where inbound control channel bandwidth requirements are determined. The inbound control channel bandwidth requirements can be determined by accessing a database where bandwidth requirements are stored, or inputted by a user of the communication system infrastructure. For example, if 32

kilohertz of bandwidth are needed, given that a frame cycle is 250 microseconds, or operating at a 4 KHz rate, the inbound control channel needs 8 bits per frame to meet the bandwidth requirements.

Once the bandwidth requirements have been obtained, the process proceeds to step **400** where at least one of a plurality of inbound carrier channels is selected as the inbound control channel from the inbound control channel bit loading table based on the bandwidth requirements. Having selected at least one of the plurality of inbound carrier channels to function as the inbound control channel, the primary site sends a message to all the secondary sites identifying the inbound carrier channel, or channels, functioning as the inbound control channel, this is done at step **402**. Once the inbound control channel has been identified, the secondary sites may access the inbound control channel in a variety of ways. For example, the secondary sites may access the inbound control channel in a time division multiplexing access manner (TDMA), a frequency division multiplexing accessing manner (FDMA), or a combination of TDMA and FDMA. This is depicted at step **404** and will be further described with reference to FIGS. **20** and **21**.

FIG. **20** illustrates an example of the secondary sites accessing the inbound control channel in an FDMA manner. For the purposes of this example, assume that the inbound transmission path of the communication system infrastructure includes **10** inbound carrier channels, the inbound control channel bandwidth is 12 bits, and the communication system includes 5 secondary sites. Given these assumptions, FIG. **20** illustrates five site bit loading tables **410–418**, one for each of the secondary sites. From each of the site bit loading tables, an individual inbound carrier channel has been identified to function as the inbound control channel for the respective site. Thus, the inbound control channel for site **1** is carrier channel one **420**; for site **2**, is carrier channel zero **422**; for site **3**, is carrier channel three **424**; for site **4**, is carrier channel two **426**; and for site **5**, is carrier channel four **428**.

As shown, in the FDMA accessing scheme, each secondary site is allocated a carrier channel to function as its own inbound control channel. As information is placed into frames, each frame is formatted to include the allocated carrier channels. An exemplary frame is shown with reference designation **430**, which has five of the available carrier channels allocated to the secondary sites for use as inbound control channels. Typically, not all of these secondary sites will not transmit information on its allocated inbound carrier channel during every frame. Thus, many of the carrier channels functioning as inbound control channels will not be carrying information. Note that when an FDMA approach is used to access the inbound control channel, the method of FIG. **19** is not required because each site is allocated a separate inbound carrier channel to function as the inbound control channel. The separate inbound carrier channels can be selected from the individual site bit loading tables, thus no inbound call bit loading table is generated.

As an alternative to the FDMA process, the communication infrastructure system may incorporate a TDMA process. Under the TDMA process, an inbound carrier channel, or channels, will be selected as described in FIG. **19**. With the inbound carrier channels selected, the sites would access the inbound control channel in a sequential order. Thus, for a first frame, site **1** would have exclusive access to the inbound control channel, during frame **2**, the second site would have exclusive access to the inbound control channel followed by sites **3**, **4** and **5**. This sequential accessing process continues in a round robin fashion.

The TDMA approach works well for a communication system having a few sites. With only a few sites, each site would not have to wait too long to obtain access to the inbound control channel. When there are numerous sites, however, the TDMA approach has excessive delays between allocation of the inbound control channel to a particular site.

As a compromise between the TDMA approach and FDMA approach, a combination of the TDMA and FDMA approach may be used. FIG. **21** illustrates an example of a **10** inbound carrier channel, **5** site system, where the inbound control channel bandwidth requirements are 12 bits. In addition, sites **1–5** are divided into two sets: sites **1–3** are in set A, while sites **4** and **5** are in set B. Having divided the sites into sets, a lowest common denominator (LCD) bit loading table for each set is determined. The LCD bit loading tables are generated in the same fashion as the inbound control channel bit loading table as described in FIG. **19**.

As shown, the LCD bit loading table for set A is bit loading table **434**, while the LCD bit loading table for set B is bit loading table **436**. From these bit loading tables **434**, **436**, a carrier channel or carrier channels is selected to support the inbound control channel for each set. As shown, carrier channel one **438** was selected to support set A, while carrier channel zero **440** was selected to support set B. Thus, for each frame, carrier channel **0** is dedicated for inbound control information for the set of sites B, while carrier channel **1** is dedicated for inbound control channel information for sites in set A. In this manner, the sets access the inbound control channel in an FDMA manner, while the sites of the sets access in the inbound carrier channel in a TDMA manner.

As shown in frame N **442**, site **1** of set A accesses the inbound control channel, while site **4** of set B accesses its respective inbound control channel. At frame N+1 **444**, site two access the inbound control channel for set A, while site **5** accesses the inbound control channel for set B. At frame N+2, **446**, site **3** is accessing the inbound control channel for set A while site **4** is again accessing the inbound control channel for set B. At frame N+3 **448**, site **1** is again accessing the inbound control channel for set A while site **5** is again accessing the inbound control channel for set B. This TDMA/FDMA process continues in such a round robin fashion for each frame.

From the descriptions of FIGS. **20** and **21** it should be readily apparent to one skilled in the art that the inbound control channel may be established and accessed in a variety of ways. The manner in which the sites access the inbound control channel will depend on the priority levels of the sites, and the frequency in which the sites have inbound control channel information to transmit. For example, if a particular site is supporting a dispatch station used by a municipality's police and/or emergency medical departments, this site would require constant access to the inbound control channel such that delays in obtaining emergency service are eliminated. Thus, this type of site would need FDMA access to the inbound control channel. In contrast, a site may be supporting a plurality of telephone users or video subscribers, wherein a few hundred millisecond delay is inconsequential. Thus, these sites could withstand a delay in accessing the inbound control channel where a TDMA approach would be sufficient. If both types of sites are affiliated with a communication system, the system would employ the FDMA/TDMA approach.

FIG. **22** illustrates a logic diagram that may be used to update allocations of inbound carrier channels to the

inbound control channel **450**. At step **452**, the process begins by selecting a first one of the secondary sites. The selection of a first secondary site may be done in a variety of ways. For example, the primary site may select the secondary sites in a round robin fashion according to one of the primary site's databases. Having selected the first secondary site, the process proceeds to step **454** where the primary site requests a second training signal from this particular secondary site. At step **456**, the secondary site transmits a second training signal to the primary site. At step **458**, the primary site receives the second training signal and determines a new inbound site bit loading table for the particular site. The process of receiving a training signal and determining a bit loading table was discussed above with reference to FIG. **14**. At step **460**, the primary site compares the new inbound bit loading table to the previously stored inbound bit loading table to identify changes, where changes may be in the form of bit loading increases for a particular carrier channel or bit loading decreases for a particular carrier channel.

Having identified the changes, the process proceeds to step **462** where it is determined whether all the sites have been updated. If not, the process returns to step **454** for the next site. If, however, all the sites have been tested for changes the process proceeds to step **464**. At step **464**, the process determines whether any changes have occurred between the new bit inbound site bit loading table for each of the secondary sites and the previously stored site bit loading table for each of the secondary sites. For each secondary site that did not have a change, the primary site maintains the previously stored site bit loading table as the updated bit loading table and using this information for future carrier channel allocations for the site.

If, however, a change has occurred between the new site bit loading table for a particular site and the previously stored site bit loading table for the particular site, the process proceeds to step **466** where the previously stored inbound site bit loading table is updated with the changes. In other words, the carrier channel entries having bit loading changes will be overwritten with the most current bit loading information for the particular carrier channel, which is the information contained in the new site bit loading table.

While the process shows testing all of the sites for changes before updating any of the individual site bit loading tables, one skilled in the art will readily recognize that a variety of updating techniques may be used. For example, the process may involve updating the individual site bit loading tables as changes are being identified for that site before testing for changes in other sites' bit loading tables. As another approach, the newly generated site bit loading table may be used as the updated inbound site bit loading table such that the previously stored site bit loading table is deleted or overwritten. Yet another approach may to change the carrier channel entries that have been identified as have a bit loading change without generating a new site bit loading table.

Returning to the discussion of the process, at step **466**, the inbound control channel bit loading table is updated based on the updated site bit loading tables. The inbound control channel bit loading table is updated as a compilation of all of the changes that occurred for each site. Recall that the inbound site bit loading table is a compilation of all of the inbound site bit loading tables and contains the lowest bit loading for each inbound carrier channel. Having updated the inbound control channel bit loading table, the process, at step **468**, determines whether the carrier channels currently functioning as the inbound control channel still meet the bandwidth requirements for the inbound control channel. If yes, the process is complete.

If, however, the carrier channels currently functioning as the inbound control channel do not meet the bandwidth requirements, the inbound control channel assignments must be redefined. This is determined at step **470**. The determination of new carrier channels to function as the inbound control channel will be discussed in greater detail with reference to FIGS. **30–33**.

FIG. **23** illustrates a logic diagram that may be used to establish a call within a communication system using the above described discrete multi-tone (DMT) infrastructure. For the purposes of this discussion, a call may be any form of data transfer that the communication system can support. For example, the call may be for a video data transfer, an audio data transfer, a page to a pager or pagers, a two-way RF communication, a facsimile, a plain old telephone service (POTS) call, a cellular telephone call, a data file transfer, status information requests and/or transfers, telephone interconnections, and other digital information transfers.

The process begins at step **480** where at least one call request is received from a user via a secondary site and an inbound control channel. As an alternative to receiving the call request from a user, the call request may be received from an external source. For example, the call request may be a facsimile request from a telephone user via a telephone interconnect, where the targeted recipient of the facsimile is affiliated with a secondary site (E.g. the recipient is a facsimile machine coupled to a cellular telephone or land mobile radio). As another example, the call request may be from the system manager which is requesting status information, is updating security codes with mobile radios, is changing service parameters of a mobile radio, pager, or cellular telephone, or other types of system managing functions. As yet another example, the call request may be from a dispatch station, where the dispatch station may be coupled to the primary site or a secondary site.

Regardless of the type of request, the process proceeds to step **482**, where the validity of the user and request are determined. The validity of the user is verified by the secondary site to determine if the user is an affiliated user, where an affiliated user is one that the secondary site can identify from a database as being registered with the secondary site. If not affiliated, the user is not validated. If verified by the secondary site, the primary site may also perform a validity check of the user to further insure that the user is valid. The request may be validated by the secondary site, the primary site, or both. To validate the request, the primary site-and, when the secondary site is validating the request, the secondary site-includes a database which stores the types of requests the user may validly transmit. In other words, the database contains a list of services the user may access via the communication system. If either the request or the user is not validated, i.e. the user is not authorized to make the particular request or the user is not authorized to access the system, the process proceeds to step **484** where the particular call request is denied.

In addition to validating the user and the request, the targeted units may also be validated. A targeted unit is validated in a similar manner as the requesting user. In other words, when the primary site has extracted the identity of the targeted unit, the primary site determines whether the targeted unit is affiliated with the communication system. If not, the request, at least for that targeted unit, is denied.

When the user and request are valid, the process proceeds to step **486** where the type of call is determined from the particular call request. Note that the call request includes the

identity of requesting unit, the type of call being requested, and a target destination. Having determined the call type, the process proceeds to step **488** where the number of required bits is determined by accessing a database of call types and corresponding bits required. As an example, the types of calls and their corresponding bit requirements stored in the database may be digital audio communications having a 64 kilobits per second (Kbps) requirement, 32 Kbps requirement, 16 Kbps requirement, or 8 Kbps requirement; digital video communications having, for example, a 100 Kbps requirements, a 1 Mbps requirements, or a 2 Mbps requirement; facsimile transmissions having a 4.8 Kbps, a 9.6 Kbps, or greater; or data file transfers having any data rate requirements.

Given the data rate requirements, and the frame rate of the DMT or ADSL system is 4 kilohertz, the digital audio having data rate requirement of 64 Kbps requires 16 bits per frame to be properly supported by the communication system infrastructure. The 16 bit requirement is determined by dividing the 64 Kbps data rate requirement by 4 KHz. Using similar calculations, the 32 Kbps digital audio would require 8 bits per frame, the 16 Kbps digital audio would require 4 bits per frame, and the 8 Kbps digital audio would require 2 bits per frame. The bit requirement per frame for other types of data transmissions, or transfers, would be calculated in an identical manner. Thus, the database of call types and corresponding bits required would be broken down to the particular call type (E.g. 64 KBPS audio) and the corresponding number of required bits per frame (E.g. 16 bits).

Having determined the number of required bits, the process proceeds to step **490** where the location of at least two targets are determined based on the particular call request. For example, if the call request is for a two-way RF communication, the targets may be other communication units located in different sites. Alternatively, the call request may be for a page of a number of particular pagers located in a plurality of sites. As yet a further alternative example, the call request may be to the same digital video information to a plurality of users. As one skilled in the art will readily appreciate, the call request could be for any digital information conveyance that the communication system can support.

Having identified the location of the targets, the process proceeds to step **492** where an ordered bit loading table for the call is generated. The ordered call bit loading table is generated by first accessing the database of site bit loading tables to retrieve a site bit loading table for each of the sites supporting one of the at least two targets, i.e., the sites that have at least one of the targets affiliated therewith. Having retrieved the site bit loading tables, the tables are compared, on a carrier channel by carrier channel basis, to determine the lowest bit loading for each carrier channel. Once the lowest bit loading for each carrier channel is identified, available carrier channels are identified from a carrier channel allocation information database. From this information, the carrier channel entries for the available carrier channels are arranged in an ordered fashion to create the ordered bit loading table.

The ordered fashion may be ordering the carrier channel entries —a carrier channel and it's associated bit loading-from the carrier channel having the lowest bit loading to the carrier channel having the highest bit loading. Alternatively, the table could be ordered from the carrier channel having the highest bit loading to the carrier channel having the lowest bit loading. The ordering of the order call bit loading table should coincide with a constellation encoding scheme. For example, if the constellation encoding scheme is loading data on to carrier channels having the highest bit loading first, the ordering of the ordered bit loading table should be the carrier channel having the highest bit loading to the carrier channel having the lowest bit loading. One skilled in the art will readily appreciate that the ordering of the ordered bit loading table may be done in a variety of ways other than the examples mentioned.

With the ordered bit loading table generated, at least one of the carrier channels is allocated to the call request as shown in step **494**. Allocations of carrier channels to a particular call request will be discussed in greater detail with reference to FIGS. **26–29**. Having done this, the process proceeds to step **496**, where a carrier channel in use database, or carrier channel allocation information database, is generated. This database, as the name implies, indicates which carrier channels are assigned to which particular call. This will be described in more detail below.

At step **498**, the process determines whether a second call request is received. When a second call request has not been received, the process proceeds to step **500** where it is determined whether the current call has ended. If not, the process waits until either a second call request is received or a current call ends. When a current call ends, the process proceeds to step **502** where the allocated carrier channels are reclaimed and the carrier channel in use database is updated. Having reclaimed the allocated carrier channels, they are available for allocation to another call.

When a second call is received, the process proceeds to step **504**, where the validity of the user and the requested service are tested. If not, the process proceeds to step **506** where the second call request is denied. Having denied the second call request, the process returns to step **498** where the process waits to receive either a second call request or for a current call to end.

When the request and the user of the second call request are valid, the process proceeds to step **508** where the type of call for the second call request is determined. (Recall that the type of call being requested can be directly determined from the call request.) Having determined the type of call request, the process proceeds to step **510** where the number of bits required for the second call are determined. (Recall that the number of required bit may be determined by accessing the call type to required bits table.) Having done this, the process proceeds to step **512**, where the locations of the targets for the second call are determined. (Recall that this is done by accessing a subscriber-location database within the primary site.) From this the process proceeds to step **514**, where a second ordered bit loading table is determined. Note that the second ordered bit loading table will be comprised of the lowest bit loading information for the plurality of sites involved in the second call less any carrier channels in use as identified in the carrier channel in use database. Thus the ordered bit loading table will include only an ordered representation of available carrier channels.

At step **516**, the process determines whether there are a sufficient number of carrier channels available to support the second call. This is generally accomplished by determining the total number of available bits by summing the bit loading of the available carrier channels. If the total number of available bits compares favorably (E.g. greater than) to the number of required bits for the call, then there are a sufficient number of carrier channels to support the call. If the process determines that there are not a sufficient number of available carrier channels, the process proceeds to step **518**, where the second call is queued, or denied.

If, however, there are a sufficient number of carrier channels available, the process proceeds to step **520** where carrier channels are allocated to the second call. (Allocation of carrier channels to a call will be discussed in greater detail with reference to FIGS. **26–29**). Having allocated the carrier channels, the process proceeds to step **522** where the carrier channel in use database, or carrier channel allocation information database, is updated to indicate the carrier channels that have been allocated to the second call. Once this is completed, the process returns to step **498** where is waits to receive another call request or for a current call to end.

FIG. **24** illustrates a logic diagram that may be used to implement carrier channel allocations for call requests in a four wire system, i.e. one that has a dedicated inbound transmission path and a dedicated outbound transmission path. At step **530**, the primary site receives at least one call request. The process then proceeds to step **532** where it determines whether the user and the call request are valid. If either the user or the call request is invalid, the primary site denies the requested service and the process ends for this call request. If the user and call request are valid, step **532** further determines the type of call from the call request.

At step **534**, the process determines the number of bits required for this particular call. (Recall that this is done by accessing a call type-to-required bit database stored within the primary site.) At step **536**, the process identifies the sites in which at least two targets are located. From this, the process proceeds to steps **538** and **540** where the primary site generates an inbound ordered bit loading table and an outbound ordered bit loading table. Note that steps **538** and **540** may be done simultaneously, or in a sequential fashion as shown or in inverse sequential fashion. A detailed discussion for the generation of the inbound and outbound ordered bit loading tables will be done below with reference FIG. **28**.

Having generated the inbound and outbound ordered bit loading tables, the process proceeds to step **542** and determines whether each of the inbound and outbound transmission paths have sufficient carrier channels available. In other words, the process determines if there is a sufficient number of inbound carrier channels and a sufficient number of outbound carrier channels to support the requested call. If not, the process proceeds to step **544** and queues the particular call request. Alternatively, the process, via the primary site, may deny the particular call request. If, however, there are a sufficient number of inbound and outbound carrier channels, the process proceeds to step **546**.

At step **546**, the process allocates at least one inbound and at least one outbound carrier channel to the particular call request. (The allocation of carrier channels to a particular call will be discussed in greater detail below with reference to FIGS. **26–29**.) At step **548**, the primary site transmits the identity of the allocated inbound and outbound carrier channels to the sites supporting the targets via the outbound control channel. In practice, each of the secondary sites will receive the control information (i.e., the identity of the allocated inbound and outbound carrier channels), but the control information will contain an address identifying the targeted sites (i.e., the sites supporting the target units) such that only the addressed sites will process the control information.

After allocating the carrier channels, the process proceeds to step **550** where the primary site determines, for a one-way or two-way wireless communication call request, whether each target site has an available RF communication resource, or channel. When each site has an available RF communication resource, the primary site allocates the RF communication resources to the particular call. At step **552**, the primary site transmits control information, via the outbound control channel, to the target sites, wherein the control information identifies the allocated RF communication resources.

One skilled in the art will appreciate that the present invention, for one-way RF communications (E.g.. paging) and two-way RF communications (E.g.. land mobile and/or cellular telephone) has two layers of resource trunking. The first layer, which is done in prior art communication systems, is the trunking of RF communication resources. As is known, by trunking RF communication resources, as opposed to dedicated RF communication resources to particular users, a communication system is able to support more users because the RF communication resources are better utilized. The second type of trunking, which is provided by the present invention, is the trunking of infrastructure resources. Thus, instead of the dedicated **T1** links, fiber-optic links, or microwave links coupling the secondary sites to a primary site, or central controller, the present invention trunks the infrastructure resources based on call requests. By using infrastructure trunking, expensive **T1** links, expensive fiber optic links, and expensive microwave links can be replaced with inexpensive twisted pair copper wire telephone lines. This is of added benefit in newly emerging industrialized nations that have a limited communication infrastructure of twisted pair copper wire telephone lines and little, if any, of the more expensive transmission links.

Returning to the discussion of the logic diagram of FIG. **24** at step **554**, where at least one of the target sites receives a portion of an RF communication. For the purposes of this discussion, a portion of an RF communication may be, for a two-way RF communication, an audio or data transmission by a first RF communication device where a subsequent portion of the RF communication would be an audio or data transmission in connection with the first portion of the RF communication. For example, assume that the two-way RF communication is between a police officer and a dispatch operator at a police station, where the first portion of the RF communication is the dispatcher requesting the police officer to identify his or her location. The second portion of the RF communication would be the police officer's response.

Alternatively, the RF communication may be for a one-way RF communication. In this situation, the portion may constitute the entire RF communication. For example, the RF communication may be used for data transmissions from remote data collection sites, where the data site transmits its data at given time intervals without prompting from the primary site.

After the site receives the portion of the RF communication the process proceeds to step **556** wherein the site converts the RF communication into a discrete multi-tone (DMT) message. This conversion process was generally discussed with reference to FIGS. **8–13** and will be more detailedly discussed with reference to FIGS. **34–39**. Having converted the RF communication into a DMT message, the site transmits the DMT message to the primary site via the allocated inbound carrier channel, or channels, for this particular call. This is depicted at step **558**.

At step **560**, the primary site processes the DMT message and routes the processed DMT message to the target sites. (The processing of DMT messages was generally discussed with reference to FIGS. **8–13** and will be discussed in greater detail with reference to FIGS. **40–46**.) The processed

DMT message, which may be a summation of several RF communication portions, is routed to the target sites via the outbound carrier channel or channels allocated to this particular call. Having received the processed DMT message, the sites convert the processed DMT message into a digital message and route the digital message to the target units via the allocated RF communication channels. This is depicted at step **562**.

While the first, or another, call is active, the process determines whether a second call request has been received which is shown in step **564**. Note that at any point during the process, a call could be received and processed as described herein. If a second call has not been received, the process proceeds to step **556** and determines whether a current call has ended. If a current call has not ended, the process waits for another call request or for a current call to end. If a current call ends, the process proceeds to step **568** where the allocated carrier channels of the inbound and outbound transmission paths are reclaimed and the carrier channel in use database, or carrier channel allocation information database, is updated.

When a second call request is received, the process proceeds to step **570** where the process determines the type of call requested. Having determined the type of call, the process proceeds to step **572** where the process determines the number of required bits for the call. Knowing the number of required bits, the process proceeds to step **576** where the primary site generates inbound and outbound ordered bit loading tables. From the inbound and outbound ordered bit loading tables, the process proceeds to step **576** and allocates inbound and outbound carrier channels to the second call request when such carrier channels are available.

FIG. **25** illustrates an alternate logic diagram for establishing an infrastructure to support a call. At step **580**, the primary site receives, via an inbound carrier channel, a digital information transfer request. For the purposes of this discussion, the digital information transfer request may be a request for transmission of digital audio information, digital video information, data files, a one-way RF communication, a two-way RF communication, or any other type of conveyance of digital information the communication system can support.

At step **582** the process determines the particular type of digital information being requested. Having determined the type of digital information, the process proceeds to step **584** where the primary site identifies at least one carrier channel of a plurality of carrier channels to function as an outbound transmission path for this digital information transfer. The primary site selects the carrier channel based on the type of digital information being requested and a carrier channel in use database, or carrier channel allocation information database. Allocation of carrier channels will be discussed in greater detail with reference to FIGS. **26–29**.

Having allocated carrier channels for the outbound transmission path, the process proceeds to step **586** where the primary site determines target sites. The target sites are the sites that have a subscriber affiliated therewith and where that subscriber is targeted to receive the requested digital information. Typically, the digital information transfer request will include the type of data being requested and the identity of the targeted subscribers. Thus, the primary site can readily determine the target sites given the identity of the targeted subscribers by accessing a subscriber unit-location database. Such a database is well known in the RF communication system art, thus no further discussion will be presented except to further illustrate the present invention.

At step **588**, the primary site transmits the identity of carrier channels functioning as the outbound transmission path to the target sites via an outbound control channel. Recall that the outbound control channel is one, or more, of the plurality of carrier channels which has been dedicated to function as the outbound control channel. At step **590**, the primary site transmits, via the outbound transmission path, the requested digital information to the target sites. At step **592**, the target sites route the requested digital information to the targeted subscribers. At step **594**, the process updates the carrier channel in use database to include the allocation of the carrier channels to the outbound transmission path. Note that the updating of the carrier channel in use information may be done simultaneously with step **584**.

FIG. **26** illustrates a method for allocating a carrier channel to a particular call. This process assumes that the call bit loading table has already been established. Recall that the call bit loading channel is a compilation of the lowest bit loading of each carrier channel from a plurality of site bit loading tables. Given this, the process begins at step **600** by determining the number of bits required for the particular call. Recall that the required number of bits may be determined by accessing a call type and required bits database. For example, a 64 Kbps digital audio transmission requires 16 bits per frame.

Having identified the number of required bits, the process proceeds to step **602** where the process scans the call bit loading channel to find a closest match carrier channel. For the purposes of this discussion, a closest match carrier channel is one that has a bit loading most closely matching the number of required bits. At step **604**, the bit loading of the closest match carrier channel is compared to the number of required bits. If the bit loading of the closest match carrier channel is less than or equal to the number of required bits, the process proceeds to step **606** and allocates the closest match carrier channel to the particular call.

When the bit loading of the closest match carrier channel is less than the number of required bits, a remaining number of required bits is calculated by subtracting the bit loading of the closest match carrier channel from the number of required bits. Next, the call bit loading table is scanned to find a second closest match carrier channel for the remaining number of required bits. If the bit loading of the second closest match carrier channel is less than or equal to the remaining number of required bits, the process allocates the second closest match carrier channel to the particular call. If the bit loading of the second closest match carrier channel is less than the remaining number of required bits, a second remaining number of required bits is determined by subtracting the bit loading of the second closest match carrier channel from the remaining number of required bits. This process continues in this loop until the bit loading of the next closest match carrier channel is greater than or equal to the last remaining number of required bits.

When the bit loading of the closest match carrier channel, or the next closest match carrier channel, is greater than the number of required bits, the process proceeds to step **608** and adjusts the bit loading of the closest match carrier channel, or the next closest match carrier channel, is adjusted to equal the number of required bits, or remaining number of required bits. Having done this the process proceeds to step **610** wherein the adjusted closest match carrier channel is allocated to the particular call. Note that the closest match carrier channel is being adjusted to match the number of required bits such that only relevant data is being transmitted. As an alternative to adjusting the bit loading of the closest match carrier channel, the primary site

could inject null data into the excess bits, i.e., the bits which exceed the number of required bits.

FIG. **27** illustrates an alternate method for allocating a carrier channel to a particular call request. At step **620**, the primary site receives a carrier channel allocation request, wherein the carrier channel allocation request may request allocations of outbound carrier channels separately or with inbound carrier channels for a particular call. Having received the carrier channel allocation request, the process proceeds to step **622**, where the primary site determines the type of service being requested from the carrier channel allocation request. The type of service being requested may be transfer of digital audio, digital video, establishing a one-way wireless communication path, establishing a two-way wireless communication path, or any other service that may be supported by a communication system.

At step **624**, a service type-to-bit requirement database is accessed to determine the number of required bits for this particular requested service. For the purposes of this discussion, the service type-to-bit requirement database stores, for a particular service, the number of bits required per frame. The number of bits per frame is calculated based on a data rate requirement of the requested service and the operating rate of the infrastructure. For an infrastructure that uses ADSL technology, the number of required bits equals the data rate requirement divided by 4,000 (the frame rate for ADSL). Thus, for a service having a 64 Kbps data rate requirement, the number of required bit will require 16 bits per frame (64,000/4,000=16).

At step **626**, the primary site generates an ordered bit loading table based on the carrier channel allocation request. Recall that an ordered bit loading table is a compilation of target site bit loading tables that includes available carrier channels ordered in a given manner. Determination of the target sites is performed by the primary site by interpreting the request to identify targeted subscribers. From the targeted subscribers, the primary site accesses a subscriber-location database to determine the sites having the targeted subscribers affiliated therewith.

At step **628**, the primary site scans the ordered bit loading table to determine whether the number of required bits exceeds the bit loading of a first channel carrier having a maximum bit loading. At step **630**, the process determines whether the number of required bits exceeds the bit loading of the first carrier channel. When it does, the process proceeds to step **638**, where the primary site allocates the first carrier channel to the particular request. Having made this allocation, the process proceeds to step **640** and calculates a remaining number of required bits based on the number of required bits and the bit loading of the first carrier channel. As an example, assume that the number of required bits is 30 and the bit loading of the first carrier channel is 14 bits. The remaining number of required bits (**16**) is determined by subtracting the bit loading (**14**) from the number of required bits (**30**).

Having determined the remaining number of bits, the process proceeds to step **642**, where the primary site scans the ordered bit loading table for a second carrier channel having the next maximum bit loading. Note that when a carrier channel is allocated to the particular call it is flagged within the ordered bit loading table, such that it will not be reallocated.

At step **644**, the primary site determines whether the maximum bit loading of the next available carrier channel is less than the remaining number of required bits. If the remaining number of bits exceeds the bit loading of the next carrier channel, the process proceeds to step **646** where the primary site allocates the next carrier channel to the particular call request. Having done this, the process repeats at steps **640** through **644** until the remaining number of required bits is less than the bit loading of an available carrier channel having a maximum bit loading. Continuing with the example of step **640**, where the number of required bits is 30 and the first carrier channel has a bit loading 14 bits, the first remaining number of required bits is **16**. Assume that the bit loading of the next carrier channel is 13 bits such that the second remaining number of bits is 3 (16−13=3). Further assume that the carrier channel having the next maximum bit loading has a bit loading of 12 bits. Thus, the condition for the "do loop" has been met and the process moves on to step **632**.

At step **632**, which may be arrived at from a negative decision at step **630** or a positive decision at step **644**, the process determines a closest match carrier channel. The primary site determines the closest match carrier channel by scanning the ordered bit loading table to find a carrier channel that has a bit loading that matches, or most closely matches, the number of required bits or remaining number of required bits. For example, with the example given above, the last remaining number of required bits is 3. Thus the first carrier channel having a bit loading of 3 will be allocated by the primary site to the particular call. If not, a carrier channel having a bit loading greater than three but as close to 3 as possible, i.e., a carrier channel having a bit loading of 4 bits, will be allocated.

At step **634**, the bit loading of the closest match carrier channel is adjusted if needed. As mentioned in the preceding example, when the closest match carrier channel has a bit loading of 4 bits but only 3 bits are required, the bit loading of the particular carrier channel is adjusted down to the 3 bits. Having made this adjustment, the process proceeds to step **636** where the closest match carrier channel is allocated to the particular request. As an alternative to reducing the bit loading of the carrier channel, the excessive bits may be filled with null information or the excessive bits may be used for another call request.

FIG. **28** illustrates a logic diagram that may be used to generate an ordered bit loading table. At step **650**, the primary site determines target sites from a channel allocation request. Recall that target sites are sites that have a targeted subscriber unit affiliated therewith. Having determined the target site, the process proceeds to step **652** and accesses a site bit loading database to obtain site bit loading tables for each of the target sites. Having done this, the process proceeds to step **654** and accesses a carrier channel in use database, or carrier channel allocation database, to determine a plurality of available carrier channels. Having gathered this information, the process proceeds to step **656** where, for each carrier channel of the plurality of available carrier channels, a comparison is made between the bit loading in each of the site bit loading tables of the target sites. From this comparison, the lowest bit loading value, for each carrier channel, is stored in a call bit loading table, which is depicted at step **658**.

Having compared the bit loading of each carrier channel entry in the site bit loading tables, the process proceeds to step **660** where the primary site orders the carrier channel entries in the call bit loading table to produce the ordered bit loading table. The ordering of the bit loading table may be done to simulate how an ADSL encoder and decoder function. For example, in a typical ADSL encoder, the encoder allocates data to carrier channels having the largest number of bit loading before allocating data to carrier channels

having lower bit loading. Thus, the ordered bit loading table will generally be ordered from the carrier channel having the largest bit loading to the carrier channel having the lowest bit loading.

FIG. **29** illustrates an alternative method for allocating carrier channels to call requests in the system as shown in either FIG. **8** or FIG. **9**. At step **670**, the primary site obtains a carrier channel allocation request. The request may be obtained by generating the request within the primary site, or may be received from an external source. An external source may be one of the plurality of sites or from a system manager. Regardless of how the carrier channel allocation request is obtained, the process proceeds to step **672** where the process determines a number of required bits. As previously mentioned, the primary site determines the number of required bits by accessing a call type-to-bit requirement database.

At step **674**, the primary site accesses an ordered bit loading table to obtain bit loading for each carrier channel. The ordered bit loading table may be generated as previously described with reference to FIG. **28**. Having obtained the bit loading for each carrier channel, the process proceeds to step **676**, wherein the process sums the bit loading of the carrier channels to obtain a number of available bits. At step **678**, the process compares the number of required bits with the number of available bits calculated in step **676**. As step **680**, the process branches depending on whether the comparison of step **678** was favorable, a favorable comparison occurs when the number of available bits matches or exceeds the number of required bits.

If the comparison at step **680** was unfavorable, the process proceeds to step **682** where the process queues or denies the request and transmits a system busy or denied message to the requesting subscriber. If, however, the comparison was favorable, the process proceeds to step **684** where the process determines whether the number of required bits equals the bit loading of a carrier channel. This determination is done by scanning the ordered bit loading table to see if the bit loading of any of the carrier channels matches the number of required bits. If the scan finds a match, the process proceeds to step **686** where the process allocates the carrier channel having the bit loading which matches the number of required bits to the carrier channel request. If, however, a match is not found in step **684**, the process proceeds to step **688** where a determination is made as to whether the number of required bits is greater than the bit loading of a carrier channel having the maximum bit loading in the ordered bit loading table.

When the answer to the comparison to step **688** is no, at step **690**, the process compares the bit loading of each carrier channel with the number of required bits to find a closest match carrier channel. A closest match carrier channel is one that has bit loading greater than the number of required bits, but is closest to the number of required bits. For example, if the number of required bits is 4 and the only two carrier channels available have a bit loading of 6 bits and 8 bits, the carrier channel having the bit loading of 6 bits will be the closest match. At step **692**, the process adjusts the bit loading of the closest match carrier channel to equal the number of required bits, an adjustment message is generated, and the closest match carrier channel is allocated to the call request.

Adjusting the bit loading of the closest match carrier channel is done by changing the bit loading to match the number of required bits, thus in the mini example presented above, the carrier channel having a bit loading of 6 bits will be adjusted to 4 bits. This adjustment is used to prevent unnecessary data being transmitted. As one skilled in the art can readily appreciate, this adjustment may be alleviated by injecting null information into the extra 2 bits. If such an approach is taken, a null indication is generated such that the receiving end knows which particular bits are carrying the null information. Alternatively, the extra two bits could be used to carry data for another data transfer request.

When the number of required bits is greater than the bit loading of any carrier channel, at step **694**, the process allocates the carrier channel having the maximum bit loading, i.e., the maximum carrier channel, to the carrier channel request. Having done this, the process proceeds to step **696** where the process determines a remaining number of required bits from the number of required bits and the bit loading of the maximum carrier channel. As an example, the remaining number of required bits may be determined by subtracting the bit loading of the maximum carrier channel from the number of required bits.

At step **698**, the process determines whether the remaining number of required bits equals the bit loading of any available carrier channel. If yes, the process proceeds to step **700** where the particular carrier channel is allocated to the carrier channel request. Having done this, the particular carrier channel allocation request has been allocated a sufficient number of carrier channels to fulfill the bandwidth requirements of the service being requested. Thus, concluding the process for this particular carrier channel allocation request.

If, however, the remaining number of bits does not equal the bit loading of a carrier channel the process proceeds to step **702** where the process determines whether the remaining number of bits is greater than the bit loading of any available carrier channel. If the answer is yes, the process reverts back to step **694** where the carrier channel having the maximum bit loading is allocated to the particular carrier channel request then a second remaining number of required bits is calculated.

If, however, the remaining number of required bits is less than the bit loading of a carrier channel having a maximum bit loading the process proceeds to step **704**. At step **704**, the bit loading of each carrier channel is compared with the remaining number of required bits to find a closest match carrier channel. Having found a closest match carrier channel, the process proceeds to step **706** where a determination is made as to whether the remaining number of required bits is equal to **1**. If the answer to step **706** is no, the process proceeds to step **708** where the closest match carrier channel has its bit loading adjusted to match the remaining number of required bits and the closest match carrier channel is allocated to the carrier channel allocation. Having done this, the carrier channel allocation request has been supplied with a sufficient number of carrier channels to meet the bandwidth requirements for the call.

If, however, the remaining number of required bits is equal to 1, the process proceeds to step **710** where an inquiry is made as to whether any of the allocated carrier channels has a bit allocation greater than 3. If not, the process proceeds to step **712** where the request is denied. If, however, the answer to step **710** is yes, the closest match carrier channel has its bit loading adjusted to 2 bits and a previously allocated carrier channel has its bit loading reduced by 1 bit. For example, assume that an allocation to a particular request has already allocated a carrier channel having a bit loading of 7 bits. A remaining number of bits is calculated to be 1, a closest match carrier channel is found to have 3 bits. Thus, the closest match carrier channel will

have its bit loading adjusted to 2 bits and the bit loading of the previously allocated carrier channel will have its bit loading reduced to 6 bits.

The previous step is required due to ADSL requirements. Per the ADSL requirements, the minimum bit loading a carrier channel can have is 2 bits. With two bits, the quadrature amplitude modulation (QAM) signal generated from the two bits will have a single constellation point in each quadrant. Having one constellation point in each quadrant is the minimum amount of constellation points that a QAM signal can represent.

FIG. **30** illustrates a logic diagram that may be used to perform carrier channel allocation updates. At step **720**, the primary site receives updated bit loading information from a plurality of sites. In an ADSL system, bit loading information is updated on a regular basis. Typically updating occurs every 69th frame by transmitting a training signal to the plurality of sites. The frequency in which the updating needs to take place may be adjusted based on the environment in which the twisted pair copper wire telephone line exists. For example, the transfer characteristics of the twisted pair copper wire telephone line change due to temperature, wind, humidity, and other environmental variations.

Having received the updated bit loading information from the plurality of sites, the process proceeds to step **722** where, for each active call, an updated call bit loading table is determined. As previously mentioned, a call bit loading table is a compilation of site bit loading tables wherein the site bit loading tables are determined by the particular sites having a target unit located within their boundaries. Thus, the process at step **722** is a similar process as described above other than the function at step **722** utilizes the updated bit loading information from the sites obtained in step **720**.

Having generated the updated call bit loading tables, the process proceeds to step **724** where the primary site determines whether the current carrier channel allocation for the particular call provides sufficient bandwidth. This determination is made by comparing the updated bit loading of the carrier channel(s) allocated to a particular call with the previous bit loading of the carrier channel(s). If the bit loading for the allocated carrier channels remain the same or increase, the answer to step **724** will be yes. If, however, the bit loading goes down, the answer to step **724** is no.

As an example, assume that two carrier channels have been allocated to a particular call. The bit loading for these two carrier channels is 7 bits and 6 bits, respectively, and the bandwidth requirements is 13 bits. After a bit loading update, the bit loading of these two carrier channels has changed to 8 bits and 5 bits, respectively. Thus, the bandwidth requirements are still met even though the distribution of the data will be different. If, however, the updated bit loading for the two carrier channels is 7 bits and 5 bits, respectively, the current carrier channel allocation does not provide sufficient bandwidth.

If the answer to step **724** was yes, the process proceeds to step **726** where, for a carrier channel having a bit loading increase, bit reduction data is adjusted within the carrier channel allocation database. For the purposes of this discussion, the bit reduction information indicates the number of bits that a carrier channel has been reduced to match the bandwidth requirements. For example, a carrier channel has a bit loading of 12 bits, but, the call bandwidth requirements only needs 10 bits. Thus, in the carrier channel allocation database, the bit loading of the carrier channel will be adjusted to 10 bits and the bit reduction data will be 2 bits.

If the answer to the inquiry of step **724** was no, the process proceeds to step **728**. At step **728**, an inquiry is made as to whether addition carrier channel resources are available. Additional carrier channel resources may be in the form of available carrier channels or available bits due to a previous bit reduction. If the answer to the inquiry of step **728** is yes, the process proceeds to step **730** wherein the current carrier channel allocation is modified to meet the bandwidth requirements. This may be done by adjusting the bit loading of allocated carrier channels or by allocating addition carrier channels to the call. If, the modification is done by adjusting the bit loading of allocated carrier channels, the bit reduction information is added to the bit loading of the carrier channel to generate new bit loading information and the bit reduction data is reduced to zero. For example, assume that one carrier channel was allocated to a particular call and the carrier channel has an adjusted bit loading of 10 bits and a bit reduction of 2 bits. After an update, the bit loading of the channel was reduced to 10, thus the 2 bits of bit reduction would be deleted to meet the required bandwidth.

If the answer to step **728** was no, the process proceeds to step **732** where an inquiry is made as to whether the particular call is a control channel. If the answer to step **732** is no, the process proceeds to step **738** where the call is queued until carrier channel resources become available, or the call is terminated.

If, however, the answer to step **732** is yes, the process proceeds to step **734**. At step **734**, a low priority call is pre-empted to produce available carrier channel resources. Having made carrier channel resources available, these carrier channel resources are allocated to the control channel, which is depicted at step **736**.

FIG. **31** illustrates a logic diagram for producing an updated call bit loading table. At step **730**, updated bit loading information is received as either new site bit loading tables or as a bit loading change message. As indicated by this inquiry, the updated bit loading information may be received as new site bit loading tables, wherein a site, after receiving the update training signal, transmits a new, or updated, site bit loading table to the primary site. Alternately, the site could compare the new bit loading table with the previous bit loading table for any differences. When the site detected a difference, the site generates a change message indicating which carrier channels had a bit loading change and the type of change. Having done this, the site sends the change message.

When the bit loading information is transmitted as a change message, the process proceeds to step **732** where the primary site creates an updated site bit loading table from the change message. This is accomplished by taking the existing site bit loading table and interpreting the change messages to create the updated site bit loading table. Having done this the process proceeds to step **734**.

At step **734**, a site location database is accessed to determine which sites are supporting a current call to produce a set of sites. The process then proceeds to step **736** wherein, for each carrier channel entry in the set of sites bit loading tables, the lowest bit loading is determined. Thus, if a call is being supported by three sites and carrier channel **1** has a bit loading of 12 bits in site **1**, 11 bits in site **2**, and 13 bits in site **3**, the lowest bit loading for carrier channel **1** is 11 bits. This 11 bits will be entered into the updated call bit loading table. This is depicted at step **738**, wherein the lowest bit loading for a particular carrier channel is entered into the updated call bit loading table. Next, the process proceeds to step **740** where each of the particular carrier

channels in the set of site bit loading tables are compared to determine the lowest bit loading. Then, the lowest bit loading is entered into the updated call bit loading table. Once each of the carrier channels has been compared, the updated call bit loading table is complete.

FIG. **32** illustrates an alternative embodiment for updating carrier channel allocations. At step **742**, the process accesses a carrier channel allocation database to determine bit loading requirements for a particular call. Having obtained this information, the process proceeds to step **744** where the carrier channel allocation database is again accessed to identify at least one carrier channel. Having done this, the process proceeds to step **746**, wherein bit loading of the at least one carrier channel is determined from the updated call bit loading table. With this information, a comparison is made at step **748** to determine whether the bit loading of the carrier channel is greater than or equal to the bit loading requirements.

If the bit loading of the carrier channel indicated in the updated call bit loading table is greater than or equal to the bit loading requirements, the process proceeds to step **752** where the process indicates that the current carrier channel allocation provides sufficient bandwidth. In other words, when the bit loading remains the same or increases for the allocated carrier channel, the bandwidth requirements are met, thus the carrier channel provides sufficient bandwidth. Having made this determination the process proceeds to step **754**.

At step **754**, the process first determines whether the bit loading of the allocated carrier channel increases, or is greater than the bit requirements. If not, the process is complete for this updating process. If, however, the bit loading has increased, the carrier channel's bit loading is adjusted to met the bandwidth requirements. In addition, the bit reduction data is updated to indicate the number of bits the allocated carrier channel has been reduced. Having done this, the process proceeds to step **756** where the carrier channel allocation database is updated with the carrier channel's bit loading and bit reduction data.

If the updated bit loading of the carrier channel is less than the bit loading requirements, the process proceeds to step **750** where it is determined that the current carrier channel allocation does not provide sufficient bandwidth. In other words, when the bit loading of the allocated carrier channel is reduced as a result of the updating, the carrier channel cannot support the bandwidth, or meet the bit requirement of the particular call. Having made this determination, the process proceeds to step **758**.

At step **758**, the process accesses the carrier channel allocation database to determine bit reduction data for the at least one carrier channel. This is done to determine whether the previous bit loading of the carrier channel had been bit reduced to match the bandwidth requirements for the call. Note that when the updated call bit loading table is generated, the bit loading for a carrier channel will be the maximum bit loading for that carrier channel less the number of bits indicated by the bit reduction dam. For example, assume that initially a carrier channel had a bit loading of 12 bits. The bandwidth requirement for the particular call it is supporting is only 10 bits. Thus, the bit loading in the call bit loading table would be 10 bits and the bit reduction data would be 2 bits. When the carrier channel bit loading is updated, it is determined that its new maximum bit loading is 10 bits. When the call bit loading table is updated, it will be updated to 8 bits (10 minus 2) due to the 2 bits in the bit reduction field of the carrier channel allocation database.

Having accessed the carrier channel allocation database at step **758**, the process proceeds to step **760** where it is determined whether the bit reduction data is greater than or equal to 1 bit. If the bit reduction data is greater than or equal to 1, the process proceeds to step **762** where the bit reduction data is added to the bit loading of the carrier channel to get further updated bit loading information. Having generated the updated bit loading, the process proceeds to step **764** where it is determined whether the updated bit loading is greater than or equal to the bit loading requirements.

If the updated bit loading is not greater than or equal to the bit loading requirements, or the bit reduction data is 0 bits, the process proceeds to step **770** where a determination is made to identify a bit loading difference. The bit loading difference can be determined by subtracting the current bit loading capabilities of the carrier channel from the bit loading requirements. At step **772**, the process determines whether the bit loading difference is greater than 1. If the bit loading difference is greater than 1, the process proceeds to step **774** where another carrier channel is allocated to the current call. Having done this, the carrier channel allocation database is updated.

If, however, the bit loading difference as determined in step **772** is not greater than 1, the process proceeds to step **776**. At step **776**, another carrier channel having a bit loading of at least 2 bits is allocated to the particular call. Having done this, the previously allocated carrier channel has its bit loading reduced by 1. Having reduced the bit loading by 1, the bit reduction dam for this carrier channel is updated.

When the updated bit loading is greater than or equal to the bit loading requirements as determined at step **764**, the process proceeds to step **766**. At step **766**, the bit loading of the carrier channel is set equal to the bit loading requirements. Having done this, the process proceeds to step **768** where the bit reduction data is updated to reflect the number of bits the bit loading has been reduced and this value is stored in the carrier channel allocation database.

FIG. **33** illustrates a logic diagram that may be used for updating carrier channels that have been allocated to a control channel. At step **780**, updated bit loading information is obtained from a plurality of sites. Having obtained this information the process proceeds to step **782** where an updated control channel bit loading table is determined. Recall that a control channel bit loading table is a compilation of all of the site bit loading tables wherein the control channel bit loading table stores the lowest bit loading for each carrier channel.

At step **784**, the process determines whether the current carrier channel allocation for the control channel had a total bit reduction. A total bit reduction is determined by summing the bit loading for each carrier channel allocated to the control channel. If a total bit reduction did not occur, the process proceeds to step **786** where an inquiry is made as to whether the control channel can be fulfilled with fewer carrier channels. This determination is based on comparing the bit loading of the allocated carrier channels to the control channel in comparison to the number of required bits for the control channel. If the bit loading of one of the carrier channels can be removed and the bit requirements for the control channel can be met, then the control channel can be fulfilled with fewer carrier channels.

If the control channel cannot be fulfilled with fewer carrier channels, the process proceeds to step **790**. At step **790**, the current carrier channel allocations are maintained and bit loading may be adjusted accordingly. Note that the bit loading may be adjusted to meet the bandwidth require-

ments and, if done, the bit reduction will be stored in a carrier channel allocation database.

When the current carrier channel allocation for the control channel has undergone a bit reduction, the process proceeds to step **792**. At step **792**, an inquiry is made as to whether any of the carrier channels allocated to the control channel have bit reduction data greater than 0. In other words, the inquiry at step **792** determines whether a carrier channel allocated to the control channel had its bit loading reduced to match the bandwidth requirements. If the inquiry to **792** is yes, the process proceeds to step **800**. At step **800**, the bit loading of the particular carrier channel is increased by the bit reduction data. Having done this, the process proceeds to step **802**, where an inquiry is made as to whether the bit loading increase provides sufficient bit loading to meet the bit requirements. If the answer to **802** is yes, the process proceeds to step **804** where the carrier channel allocation database is updated to reflect the change.

If the answer to step **792** or the answer to step **802** is no, the process proceeds to step **794**. At step **794** an inquiry is made as to whether another carrier channel is available. If yes, the process proceeds to step **795** where the other carrier channel is allocated to the control channel and the carrier channel allocation database is updated to reflect this change. If, however, another carrier channel is not available the process proceeds to step **796**.

At step **796**, a low priority call is terminated to produce an available carrier channel. Prioritization of calls has not been discussed in great detail, but to one skilled in the art, prioritization is a well known technique. Thus, a detailed description of call prioritization is not necessary for the understanding of this invention.

Having terminated a low priority call, the process proceeds to step **798** where the carrier channel made available is allocated to the control channel. Having made this allocation, the carrier channel allocation database is updated.

FIG. **34** illustrates a function block diagram of a discreet multi-tone transmitter **805**. As shown, a stream of data entries **807**, which includes a plurality of data entries **809**, is received by a data formatter **806**. In addition to receiving the data stream **807**, the data formatter also receives carrier channel allocation information **810**. From the data stream **807**, the data formatter produces an ordered data stream **808** based on the carrier channel allocation information **810**. The ordered data stream **808** is then received by a discreet multi-tone encoder **812**, which also receives bit loading information **816**. Based on the bit loading information **816**, the discrete multi-tone encoder **812** produces an encoded data stream **814**.

The illustration of FIG. **34** depicts a system having only ten carrier channels. In a typical ADSL system, however, there are **256** carrier channels, or separate frequencies. The present invention contemplates using the ADSL system techniques, nevertheless, for the sake of illustration, the remainder of the discussion for this figure will deal with a system having only ten carrier channels. As shown, the data stream **807** includes an outbound control channel data entry, a first data entry, a second data entry, and a third data entry. The order in which the data entries are placed in the data stream are determined upon receipt of the calls or some other determination mechanism. This determination is made by the TDMA switch of FIGS. **10** and **11**, wherein the TDMA switch produces the data stream **807**. Note that the data stream **807** is shown with a number under each data entry, where the number represents the number of required bits per frame. Thus, the outbound control channel requires 22 bits, while the first data entry requires 8 bits, the second data entry requires 16 bits, and the third data entry requires 32 bits.

The carrier channel allocation information table **810** includes a carrier channel field **818**, a bits field **820**, an allocation field **822**, and an address pointer field **824**. The generation of the address pointer information will be described later with reference to FIGS. **46–50**. As shown, carrier channel **1** and carrier channel **2** each have a bit loading of 11 bits and are allocated to the outbound control channel. Carrier channel **7** is allocated to data entry, or call, **1**. Carder channels **6** and **9** are allocated to data entry, or call, **2**. Carrier channels **0**, **3**, **4**, and **5** are allocated to data entry, or call, **3**. The determination of carrier channel allocation was done in accordance with the logic diagrams of FIGS. **26–29**.

The data formatter **806** utilizes the carrier channel allocation information **810** to generate the ordered data stream **808**. The ordered data stream **808** is needed to insure that the discrete multi-tone encoder **812** will affiliate the appropriate portions of the data entries with the allocated carrier channels. For example, as mentioned, carrier channels **1** and **2** have been allocated to the outbound control channel. The discreet multi-tone encoder **812**, assuming a constellation encoding pattern of loading data into a carrier channel having the greatest bit loading to carrier channels having the smallest bit loading, will place the data it receives in the carrier channels having the largest bit loading first. Thus, as shown in the carrier channel allocation information table **810**, the first carrier channel that the discrete multi-tone encoder will place data in is carrier channel **1**. Having filled carrier channel **1**, the encoder will then sequentially fill carrier channels **2**, **6**, **4**, etc.. Thus, the data formatter **806** must organize the data stream of data entries **807** into the ordered data stream such that the data blocks of the data entries will be affiliated with the appropriate carrier channel.

While the discreet multi-tone encoder **812** will load particular carrier channels based on their bit loading, the encoded data stream will be organized in a sequential manner based on the bit loading information. The sequential manner is based on the carrier channel numbering. As shown, the encoded data stream **814** is organized from carrier channel **0** to carrier channel **9**. The bit loading information informs the DMT encoder **812** as to how much of the ordered data stream is to be placed on to each of the carrier channels. The DMT encoder **812** will essentially use the ADSL encoding scheme, thus no further discussion will be presented except to further illustrate the present invention.

FIG. **35** illustrates a more detailed schematic block diagram of the data formatter **806**. As shown, the data formatter **806** includes a dual stage memory **826**, an output section **836**, a read address generation unit (AGU) **828**, a write address generation unit **830**, a first multiplexer **834**, and a second multiplexer **832**. The dual stage memory **826**, which may be a Manchester encoder, includes a first stage **838** and a second stage **840**. The output section **836** includes an adder **844** and an AND gate **846**.

In operation, the data stream of entries **807** are received in a shift right serial manner into the data input port of either the first stage **838** or the second stage **840** and read out in the ordered data stream **808**. The controller **110**, which may be the controller within the primary site or any one of the secondary sites as illustrated in FIG. **10** or **11**, provides a read-write signal **842**, an enable signal **848**, and address pointer information **850** to the data formatter **806**. The

read-write signal **842** indicates which of the stages of the dual stage memory **826** will be providing the ordered data stream **808** and which will be storing the data stream **807**. In addition, the read-write signal **842** enables the mutliplexers **834**, **836** to provide the addresses generated by the read AGU **828** or the write AGU **830** to the first or second stage of the dual stage memory **826**. The read-write signal **842** is toggled on a frame cycle basis. In other words, for one frame (250 μSec for an ADSL frame) the read-write signal **842** is providing a logic "1" signal to the second stage **840** and to multiplexer **832**, such that the second stage **840** is in the read mode and receiving addresses from the read AGU **828**. During this frame cycle, an inversion of the read-write signal **842** (logic "0") is provided to the first stage **838** and multiplexer **834** such that the first stage is in the write mode and receiving addresses from the write AGU. For the next frame cycle, the read-write signal provides a logic "0" signal such that the second stage is now in the write mode while the first stage is in the read mode. To one skilled in the art, the logic value of the read-write signal may be altered and still achieve the desired results.

The address pointer information **850** is used by the read AGU to allow the stages to be read out in a fragmented manner to produce the ordered data stream. This will be discussed in greater detail below with reference to FIG. **62**. Alternatively, the address pointer information **850** could be utilized by the write AGU **830** to write in the information in a staggered manner, such that the data stream **807** is stored as the ordered data stream **808** and read out serially. Generation of the address pointer information **850** will be discussed below with reference to FIGS. **48–50**.

Note that the data formatter **806** is clocked at a rate of 15.36 MHz. This frequency is chosen based on the maximum bit rate for an ADSL system. (Note that the clock rate may be chosen to be a different value depending on the needs of the system, or the clock rate may be variable based on the data rate.) Recall that an ADSL system has 256 carrier channels, with each carrier channel being able to carry up to 15 bits. Also recall that the ADSL frame rate, or frame cycle, is 4 KHz. Thus, the maximum bit rate is 256*15*4K which equals 15.36M. While the maximum bit rate is 15.36 Mbps, the practical maximum bit rate will be 6 Mbps to 9 Mbps based on the gauge of wire used and the length of wire. Thus, there will be a sufficient number of clocks cycles in which no data is being stored or sourced. To prevent dataless entries into the ordered data stream **808**, the controller **110** provides the enable signal **848** to the output section **838** and the read AGU **828**. The enable signal **848** is logic "1" when actual data is being read from the dual stage memory **826** and a logic "0" thereafter for a frame cycle. For example, if bits are read from the dual stage memory **826** in a serial manner and there are 1,000,000 bits of data stored, the enable signal will be logic "1" for the first 1,000,000 clock cycles within a frame cycle and will be logic "0" for the remaining 14,360,000 clock cycles of the frame cycle. Thus, to one skilled in the art, the enable signal **848** may be generated by a variety of digital circuits, such as a counter and latch, a sub-routine within a microprocessor, etc.

In operation, the write AGU **830** produces a circular buffer addressing scheme wherein the bits of the data stream **807** are serially shifted right into the first or second stage **838**, **840**, depending on which stage is in the write mode. Thus, the first bit in the data stream **807** will be stored in the first storage location of either the first stage **838** or the second stage **840**. The next bit in the data stream **807** will be stored in the second storage location, the third bit in the third storage location, and so on until all of the bits of the data stream **807** have been stored for this frame cycle.

Once a frame's worth of data has been stored, the write AGU **830** resets, or circles around, such that, for the next frame, the write AGU **830** provides the same addresses in the same order as it did for the previous frame. Note that the enable signal **848** may also be provided to the write AGU **830**, such that, when all the bits of a frame of the data stream **807** have been stored, the write AGU **830** stops generating addresses for this frame.

The read AGU **828** provides addresses to the first or second stage, depending on which stage is in the read mode, in a staggered manner. The staggered manner is determined based on the address pointer information **850** such that the data is read out as the ordered data stream. To illustrate, refer back to FIG. **34**. As shown in FIG. **34**, the carrier channel allocation information **810** includes an address pointer field **824**. The address pointer information **850** indicates the beginning address for a data block of a data entry **809** of the data stream **807**. From the carrier channel allocation database **810**, it can be seen that the data entry **809** entitled outbound control channel is allocated carrier channels **1** and **2**; the first data entry is allocated carrier channel **7**; the second data entry is allocated carrier channels **6** and **9**; and the third data entry is allocated carrier channels **4**, **0**, **3**, and **5**.

For each data entry that is allocated two or more carrier channels, the data entry is divided into data blocks, where the number of data blocks equals the number of allocated carrier channels. Further note that the ordering of the data blocks is based on the bit loading of the allocated carrier channels. For example, data entry three is allocated carrier channels **4**, **0**, **3**, and **5**, where carrier channel **4** has the greatest bit loading (10 bits), then carrier channel **0** (9 bits), carrier channel **3** (9 bits) and carrier channel **5** (4 bits). Thus, data block "a" of data entry three is allocated carrier channel **4**, data block "b" is allocated carrier channel **0**, data block "c" is allocated carrier channel **3**, and data block "d" is allocated carrier channel **5**.

While data entries are broken down into data blocks for carrier channel allocation, the data entries are stored as data entries, but are read out as data blocks to produce the ordered data stream. As an example of this refer to FIG. **62** which illustrates an exemplary process for storing the transmit data stream **1188** in a write section **1196** of the dual stage memory (**826** of FIG. **35**) and subsequently reading the stored data to produce the ordered data stream **1198**. As shown, the data stream **1188** comprises a plurality of transmit data entries. In particular, outbound control channel, data call **1**, data call **2**, and data call **3**. During the write cycle **1190**, which comprises a shift right operation, the dual stage memory sequentially stores the first data entry followed by data call **1**, data call **2**, and data call **3**.

From the carrier channel allocation table **1192**, it can be seen that only data call **1** is allocated a single carrier channel. The other data entries are allocated two or more carrier channels and, as a result, are broken down into data blocks **1194**. As shown, the outbound control channel data entry has two data blocks, wherein the first data block is allocated carrier channel **1** and the second data block is allocated carrier channel **2**. Data call **1** is allocated carrier channel **7**; data call **2** has two data blocks, where the first data block (**2*a***) is allocated carrier channel **6** and the second data block (**2*b***) is allocated carrier channel **9**; and data call **3** has four data blocks, where data block **3*a*** is allocated carrier channel **4**, **3*b*** is allocated carrier channel **0**, **3*c*** is allocated carrier channel **3**, and **3*d*** is allocated carrier channel **5**. Given the data block breakdown and the constellation encoding pattern used by a constellation encoder (discussed in FIG. **36** below), the ordered data stream **1198** can be generated.

For purposes of this discussion, assume that the constellation encoder loads data into the carrier channels having the largest bit loading capabilities first. From the carrier channel allocation database **1192**, the carrier channel order, based on greatest bit loading to least bit loading, is **1**, **2**, **6**, **4**, **0**, **3**, **7**, **9**, **5**, and **8**. Thus, the first 11 bits of data the constellation encoder receives will be placed in carrier channel **1**, the next 11 bits in carrier channel **2**, the next 11 bits in carrier channel **6**, the next 10 bits of data in carrier channel **4**, the next 9 bits of data in carrier channel **0**, and so on. To ensure that the data blocks are allocated the appropriate carrier channels, the ordered data stream **1198** supplies the data to the constellation encoder in the right order. Thus, the ordered data stream **1198**, for this example, contains, in a serial order, the data affiliated with carrier channel **1** first, followed by the data affiliated with carrier channel **2**, then **6**, **4**, **0**, **3**, **7**, **9**,**5**, and **8**.

As shown, the first data block that is read from the dual stage memory during the read cycle **1200**, is the first data block of the outbound control channel data entry. The initial read address for this data block is set equal to the address pointer for this data block. The read address is then incremented at clock cycle intervals up to the number of bits in the data entry. For the first data block of the outbound control channel, this is 11 bits, thus, the read address is incremented 11 times from the address pointer for this data block. Having produced the 11 addresses, the read cycle retrieves the address pointer for the data allocated to the next greatest bit loading carrier channel. In this example, the address pointer for the second data block of the outbound control channel is retrieved and addresses are produced to read this data block. After this data block has been read, the next data block affiliated with the carrier channel having the next greatest bit loading is read. In this example, that is the first data block of data call **2**. This process continues until all the data blocks have been read in an order based on the bit loading of the respective allocated carrier channel. For a given frame cycle, the ordered data stream will have an order of outbound control channel data block "a", outbound control channel data block "b", data call **2** data block **2***a*, data block **3***a*, **3***b*, **3***c*, data call **1**, **2***b*, and **3***d*, which corresponds to the constellation encoding of greatest bit loading to least bit loading carrier channels.

Referring back to the discussion of FIG. **34**, the ordered data stream **814** is read on a data block basis, while the data stream **807** is stored on a data entry basis. As discussed, the reading of the data is further based on the constellation encoding scheme used by the constellation encoder. Given, this information, the ordered data stream **808** is produced. From the ordered data stream, the DMT encoder **812**, which utilizes the constellation encoding scheme, generates the encoded data stream **814**. As shown, the encoded data stream is sequentially organized by carrier channel number, but the data contained within each carrier channel is as defined in the carrier channel allocation database **810**.

While the above discussion focused on storing the data stream **807** on a data entry by data entry basis and reading on a data block by data block basis to produced the ordered data stream **808**, the process could be reversed. For example, the data stream could be stored on a data block by data block basis and retrieved in a sequential order to produce the ordered data stream **808**. Under this approach, the addressing technique that was used for the read AGU would now be used for the write AGU. Similarly, the addressing technique that was used for the write AGU would now be used for the read AGU.

FIG. **36** illustrates an alternate embodiment of a DMT transmitter of FIG. **10** or **11**. As shown, the DMT transmitter includes an ADSL transmitter **852** and a data formatter **806**. The data formatter includes an address generation unit **858**, memory **856**, and an output section **854**. The address generation unit provides a first addressing scheme to the memory to store data and a second addressing scheme to read the data. As mentioned above, the first addressing scheme may be a circular buffer approach, while the second addressing scheme utilizes the address pointer information and the bit loading information such that the data is read out to produce the ordered data stream **808**. The output section **854** provides the ordered data stream **808** to the ADSL transmitter **852** when an enable signal **848** is active.

The ADSL transmitter **852** includes an input MUX **860**, a fast path **862**, an interleave path **864**, a constellation encoder **866**, a DMT modulator **868**, memory that stores a bit loading table **870**, and two input ports **872** and **874**. The first input port **872** allows the ADSL transmitter **852** to receive an ordered data stream **808** and directly provide the data to the constellation encoder **866**. The constellation encoder **866** can then, based on the bit loading table **870**, convert the ordered data stream into an encoded data stream **814** and subsequently covert it into a time domain DMT symbol **876** by the DMT modulator **868**. The bit loading information in memory **870** may be provided from an external source via the second input port **874**.

Up to this point, the data provided to the ADSL transmitter **852**, or the DMT encoder **812**, has been generated without consideration to error correction. As one skilled in the art will readily appreciate, the data-formatter **806** may include error correction techniques, to ensure a more reliable data transmission. For example, the data formatter **806** may include an interleave technique, an encryption technique, cycle redundancy checks (CRC), forward error correction, or any other type of error correction. Note that when error correction techniques are used by the data formatter **806**, a data de-formatter must include the inverse error correction techniques.

As an alternative to incorporating error correction into the data formatter **806**, the error correction within the ADSL transmitter **852** could be used. In this embodiment, the data formatter **806** would provide the ordered data stream to the inputs of the MUX **860**. The data formatter **806** would include another layer in creating the ordered data stream **808** due to the four T1 inputs of the MUX **860**.

FIG. **37** illustrates an ADSL data interface **878** coupled to an ADSL transmitter **852**. As shown, the ADSL data interface **878** includes a data formatter **806**, a processor **882**, memory **884**, and a constellation encoder simulator **886**. The memory **884** stores bit loading information, carrier channel allocation information, and bit loading requirements. The memory **884** may also store call type information, call bit requirements, call bit loading tables, and site bit loading tables. The processor **882** generates the carrier channel allocation information based on the bit loading requirements and the bit loading information and provides control signals to the data formatter **806**. Such control signals are the address pointer information, the enable signal, and the read-write signal. Thus, the processor **882** is similar in function as the processor shown in FIGS. **10** and **11**, which are included in the controller **110**.

The constellation encoder simulator **886** simulates the manner in which the constellation encoder of the ADSL transmitter encodes the data. As previously mentioned, the constellation encoder will load the data in the carrier channel having the largest bit loading first followed by carrier channels with sequentially less bit loading capabilities.

Thus, the constellation encoder provides information to the processor **882** indicating the order in which carrier channels will be loaded with data. From this information, an ordered bit loading table may be created such that the ordered data stream may subsequently be generated. Note that the constellation encoder simulator **886** may be incorporated as part of the processor **882**, but for the purposes of this drawing, is shown separately.

FIG. **38** illustrates a logic diagram that may be used to emulate a DMT transmitter. At step **890**, a transmit data stream is received wherein the data stream includes at least one data entry. Having received the data stream, the process proceeds to step **892** where bit loading information is received. Next, the process proceeds to step **894** where the process receives address pointer information for the data stream. From the address pointer information, the process extracts data entry partitioning information and an address pointer for each data entry portion.

At step **896**, an ordered data stream is generated from the transmit data stream based on the address pointer information. This may be done by storing the transmit data stream in a sequential order and reading the stored data based on the data entry partitioning information. Alternatively, the transmit data stream may be stored based on the data entry partitioning information and read in a sequential order to produce the ordered data stream. Having done this, the process proceeds to step **898** wherein an encoded data stream is produced from the ordered data stream based on the bit loading information. Having done this, the process proceeds to step **900** where the encoded data stream is converted into a discreet multi-tone signal or symbol. Note that the process described above for FIG. **38** is done for each frame.

FIG. **39** illustrates an alternative logic diagram for implementing a DMT transmitter. At step **902**, bit loading information is obtained as either a site bit loading table or a call bit loading table. A call bit loading table, as previously mentioned, is a compilation of a plurality of site bit loading tables. The manner in which this information is obtained may be done by receiving it from a controller, or acquiring it by querying the secondary sites for bit loading information and compiling the bit loading information. At step **904**, a constellation encoding function of an ADSL transmitter is simulated by arranging carrier channels based on the bit loading information of each carrier channel and a constellation encoding function. This produces a simulated encoded order of carrier channels, which may be depicted as an ordered bit loading table. Having done this, the process proceeds to step **906** where bit loading requirements for the data are obtained by accessing a bit rate requirement data base. The manner in which this data is obtained may be done by receiving it from a controller within a primary site or secondary site, or may be generated by receiving data from users of the system or from a system manager.

The process proceeds at step **908** where carrier channel allocation information is obtained. The carrier channel allocation information may be received from a controller of a primary site or secondary site, or may be individually generated within an ADSL data interface unit. Next, the process proceeds to step **910** where address pointer information is obtained. Again, this information may be internally generated in an ADSL interface unit, or received from a controller within a primary site or secondary site. Once all the necessary information has been generated or received, the process proceeds to step **912** where an ordered data stream is generated based on the carrier channel allocation information.

FIG. **40** illustrates a functional block diagram of a DMT receiver **915**. The DMT receiver **915** receives a time domain DMT symbol **876** via a DMT decoder **920**. The DMT decoder **920** produces a demodulated data stream **922** and subsequently generates an ordered data stream **808** via bit loading information **816**. The ordered data stream is then provided to a data deformatter **924**. The data deformatter **924** converts the ordered data stream **808** into a recovered data stream **926** based on carrier channel allocation information **810**.

The DMT decoder **920** produces the demodulated data stream **922** from the time domain DMT signal **876**. This is a typical ADSL, or DMT, inverse function, thus will not be discussed in great detail. In addition, the DMT decoder **920**, based on the bit loading information, subsequently converts the demodulated data stream **922** into the ordered data stream **808**. In essence, the DMT decoder **920** is performing the inverse function of the DMT encoder **812** (of FIG. **34**) to recapture the data supplied to the DMT encoder of the DMT transmitter (FIG. **34**).

Similarly, the data deformatter **924** is performing an inverse function of the data formatter **806** of the DMT transmitter (FIG. **34**). Thus, by using the carrier channel allocation information **810** on the ordered data stream **808**, the recovered dam stream **926** is obtained. Note that the recovered data stream **926** is identical to the data stream **807** inputted into the data formatter **806** of the DMT transmitter (FIG. **34**).

FIG. **41** illustrates a schematic block diagram of the data deformatter **924**. The data deformatter **924** includes a dual stage memory **928**, an output section **930**, a write address generation unit **932**, a read address generation unit **934**, and two mutliplexers, **936 938**. The dual stage memory **928** includes a first memory stage **940** and a second memory stage **942**. The output section **930** includes an adder **944** and an AND gate **946**.

In operation, the ordered data stream **808** is written into either the first stage **940** or the second stage **942** during a frame cycle. On the next frame cycle, the ordered data stream **808** is written into the other stage and read out of the previous stage. This is accomplished via the read-write signal **950** which may be supplied by a controller of a primary site or secondary site. During a first frame cycle, the read-write signal is a logic "1" such that the first stage **940** is in a write mode and the second stage **942** is in the mad mode. The read-write signal **950** is also applied to MUX **936** and MUX **938** which controls the MUXes to provide the appropriate addresses to the first and second stages **940**, **942**. For example, when the read-write signal is logic "1", MUX **938** provides the write addresses to the first stage and MUX **936** provides the read addresses to the second stage. On the next frame cycle, the read-write signal is a logic "0" such that the first and second stages switch modes, and MUX **938** and MUX **936** provide the appropriate addresses.

When in a write mode, the write AGU **932** provides the addressing information to the particular stage of the dual stage memory **928**. During the read stage, the mad AGU **934** provides the address information to the appropriate stage of the dual stage memory **928**. Note that the dual stage memory **928** may be a Manchester encoder. The write address generation unit **932** may employ a circular buffer addressing scheme such that the data of the ordered data stream is stored in a serial fashion. The read AGU **934** may employ a unique addressing scheme that utilizes the address pointer information **952** to read out data blocks such that the recovered data stream **926** may be reconstructed. Note that adder **944** may be a summing node, or just a direct coupling into the AND gate.

FIG. 42 illustrates a schematic block diagram of an alternate DMT receiver. As shown, the DMT receiver includes an ADSL receiver **954** and a data deformatter **924**. The ADSL receiver **954** includes a DMT decoder **962**, a constellation decoder **964**, a fast path **966**, a de-interleave path **968**, and a DEMUX **970**. In addition, the ADSL receiver **954** includes a first input port **974**, which allows bit loading information **816** to be directly written into a bit loading table **972**. Further, the ADSL receiver includes an output port **976**, which allows the output of the constellation decoder **964** to be directly outputted to the data deformatter **924**.

In general, the ADSL receiver **954** receives a time domain DMT symbol **876** via the DMT decoder **962**. The DMT decoder **962** converts the DMT symbol **876** into a demodulated data stream **922**. The constellation decoder **964** converts this data stream **922** into an ordered data stream **808**. The ordered data stream is outputted via the output port **976** to the data deformatter **924**. The data deformatter, which includes memory **956**, an AGU **958**, and an output section **960**, produces the recovered data stream **926**. This may be accomplished by storing the ordered data stream under a first addressing scheme during a first frame cycle, and then reading the stored data out under a second addressing scheme to produce the recovered data stream **926**. Note that the data deformatter **924** is performing the inverse function of the data formatter **806** (of FIGS. **34–39**) to recover the data that was supplied to the data formatter.

FIG. 43 illustrates an ADSL receiver **954** coupled to an ADSL data interface **981**. The ADSL data interface **981** includes the data deformatter **924**, a processor **978**, memory **982**, and a constellation decoder simulator **980**. The processor **978** provides the control signals to the data deformatter such that the data deformatter **924** can convert the ordered data stream **808** into the recovered data stream **926**. In particular, the processor **978** generates the address pointer information, the enable signal, and the rewrite signal. Recall that the read-write signal is toggled for every frame cycle. Such that for a first frame cycle, one stage of memory within the data deformatter is writing information while the second stage is reading and in the next frame cycle the first stage is reading data while the second stage is writing data.

The constellation decoder simulator **980** simulates the manner in which the constellation decoder and the ADSL receiver extract data from the DMT symbol **876** that it receives. As mentioned, data will be extracted in the opposite manner in which it was encoded. Thus, the first data out will be the data contained within the carrier channels having the largest bit loading. Thus, the constellation decoder simulator **980** simulates that process such that appropriate information can be provided to the data deformatter to accurately recover the data stream. Note that the constellation decoder simulator **980** may be incorporated in the processor **978**. In essence, the processor **978** performs the functions to generate the carrier channel allocation data base, the address pointer information, call type to bit loading requirement information, and bit loading information.

FIG. 44 illustrates a logic diagram that may be used to implement a DMT receiver. At step **984**, a time domain DMT symbol is received. At step **986**, the time domain DMT symbol is demodulated to produce a demodulated data stream. At step **988**, bit loading information and address pointer information is received. This information may be received from a controller of a primary site or a secondary site, or maybe internally generated within an ADSL interface unit.

Having obtained the appropriate information, the process proceeds to step **990** where an ordered data stream is generated from the demodulated data stream. As previously mentioned, this is performed by a constellation decoder with an ADSL receiver. Having generated the demodulated data stream, the process proceeds to step **992** where a recovered data stream is produced from the ordered data stream based on the bit loading information and address pointer information. This may be accomplished by writing the ordered data stream into memory in a serial fashion and reading it out in a fragmented fashion based on the bit loading information and address pointer information.

FIG. 45 illustrates an alternative logic diagram that may be used to simulate a DMT receiver. At step **994**, bit loading information is obtained. Bit loading information may be obtained by receiving it from a controller of a primary site or a secondary site. Alternatively, the bit loading information may be obtained by querying a plurality of secondary sites to obtain site bit loading information and generating a call bit loading table from the appropriate site bit loading tables.

At step **996**, a constellation decoder function of an ADSL receiver is simulated to produce a simulated decoded order of carrier channels. This simulated function may be performed based on the manner in which data is read from the carrier channels. Typically, this will be the inverse function of the ADSL constellation encoder such that the carrier channels having the largest bit loading will be encoded first and subsequently read first.

Having produced the simulated decoded order of carrier channels, which may be contained in an ordered bit loading table, carrier channel allocation information is obtained, which is depicted at step **998**. The carrier channel allocation information may be received from a controller of a primary site or secondary site, or may be generated by a processor of an ADSL data interface unit.

Having obtained the appropriate information, the process proceeds to step **1000** where a recovered data stream is produced from the ordered data stream based on the carrier channel allocation information.

FIG. 46 illustrates a logic diagram that may be used to generate an address pointer for either the DMT receiver or the DMT transmitter. At step **1002**, a data stream is storm in a serial order during a first frame cycle. Next, at step **1004**, during a second frame cycle, the process determines a number of bits for a first data block of the stored data. For example, if the data stored contains three data entries, wherein each of the data entries include three data blocks, step **1004** is directed towards the first data block of the first data entry. Next, the process proceeds to step **1006** wherein during the second frame cycle, the process determines an address pointer for the first data block. The address pointer for the first data block will typically be the first, or initial, address within the memory storing the data.

Next, the process proceeds to step **1008** and reads the bits of the first data block during a number of clock cycles, wherein the number of clock cycles corresponds to the number of bits within the first block. For example, assume that the first data block contains 11 bits, thus, the first 11 clock cycles of the second frame cycle will be dedicated to reading the 11 bits of data from the first data block.

At step **1010**, the above steps are repeated for the remaining data blocks of each of the data entries. Thus, assume that the second data block of the first data entry also contains 11 bits and has an address pointer of 11. Thus, during the twelfth through twenty-second clock cycle of the second frame cycle, the data will be read from the second data block. Having read all of the data in this manner, the ordered bit stream is generated as shown in step **1012**.

FIG. **47** illustrates a logic diagram that may be used to generate address pointer information as utilized by both the DMT receiver and the DMT transmitter. At step **1014**, a number of bits contained within a first data block of a data entry, which is to be stored, is determined during a first frame cycle. For example, if the data to be stored is a data stream which has three data entries wherein the first data entry has three data blocks, step **1014** is determining the number of bits in the first data block of the first data entry.

Having done this, the process proceeds to step **1016** where an address pointer is determined for the first data block during the first frame cycle. Note that the first frame cycle is the time that corresponds to when one frame of information is being transmitted. In an ADSL system, this equates to 250 microseconds. The address pointer for the first data block typically will be the first address within the receiver or transmitter memory section.

The process proceeds to step **1018** where the process stores the bits of the first data block during a number of clock cycles, wherein the number of clock cycles equate to the number of bits of the first data block. This occurs during the first framing cycle. For example, assume that the first data block contains 11 bits. Thus, the first 11 clock cycles of the first frame cycle will be dedicated to storing the data of the first data block.

In step **1020**, the preceding steps, **1014–1018**, are repeated for the remaining data blocks of the data to be stored. Thus, the second data block of the first data entry will have an address pointer determined for it, then the second data block is stored in memory during the number of clock cycles equal to the number of bits in the second data entry. Once all the data is stored, the process proceeds to step **1022** wherein, during a second frame cycle, the data is read out in a serial order to produce the recapture data stream. Thus, this particular logic diagram stores the data in the recovered data stream manner based on the address pointer information and bit loading information and then reads it out in a serial, or a circular buffer, manner.

FIG. **48** illustrates an alternative logic diagram for generating address pointer information for use by a DMT receiver or a DMT transmitter. At step **1024**, a number of data blocks for a first transmit data entry is determined from the carrier channel allocation data base. Next, the process moves to step **1026**, wherein the number of bits for each data block for the first transmit data entry is obtained. Note that a transmit data entry may be a call, such as the transmission of video data, audio data, a data file, a one-way RF communication, or a two-way RF communication.

Having obtained this information, the process proceeds to step **1028**, wherein for a first data block of the first transmit data entry, an address pointer is assigned to be the initial address of the write section of the dual stage memory, or Manchester encoder. If the dual stage memory is used exclusively for the data formatter or data deformatter, the initial address of the write section will typically be the fast address of the write section. Note that during a first frame cycle, the first stage of the dual stage memory is the write section and during a second frame cycle, the second stage is the write section.

Having assigned an address pointer to the first data block of the first transmit data entry, the process proceeds to step **1030**, where a determination is made as to whether the first transmit data entry has more than one data block. If yes, the process proceeds to step **1032**, where an address pointer for the next data block of the first data entry is determined by adding the number of bits for the previous data block to the address pointer of the previous data block. For example, if the first data block had an address pointer of zero and contained 11 bits, the address pointer for the second data block would be 11 (number of bits of the preceding data block) plus zero (address pointer of the preceding data block) which equals an address pointer for the second data block of 11.

Having determined the next address pointer, the process proceeds to step **1034** where a determination is made as to whether all of the data blocks of the transmit data entry has been assigned an address pointer. If not, the process reverts back to **1032** wherein the address pointer for the next data block is generated by adding the number of bits for the previous data block to the address pointer of the previous data block. This process continues until all of the data blocks for the transmit data entry have an address pointer. Once this occurs, the process proceeds to step **1038**.

If the inquiry into whether the first transmit data entry has more than one data block produces a negative response, the process proceeds to step **1036**. At step **1036**, a decision is made as to whether another transmit data entry exists or whether one has recently been added. If either of these inquiries are answered positively, the process proceeds to step **1044**. At step **1044**, an address pointer for a first data block of the new transmit data entry is calculated by adding the address pointer of the last data block to the number of bits of the last data block of the immediately proceeding transmit data entry. Having done this, the process proceeds to step **1046** where a determination is made as to whether the new transmit data entry has more than one data block. If the inquiry produces a negative response, the process continues at step **1038**. If, however, the inquiry produces a positive response, the process reverts to step **1032** wherein the remaining data blocks of the transmit data entry are assigned address pointers.

When the inquiry to step **1036** is negative, the process proceeds to step **1038** where the process determines whether a transmit data entry has been removed. If not, the process waits for either a new transmit data entry to be added or one to be removed.

Upon detecting the removal of a transmit data entry, the process proceeds to step **1040** where the address pointer for each data block of the deleted transmit entry is deleted from the carrier channel allocation database. When this is completed, the process proceeds to step **1042** wherein, for each transmit data entry subsequent to the deleted transmit data entry, the address pointers for the data blocks of the subsequent transmit data entries are recalculated.

The address pointers for data blocks of transmit data entries that occur subsequent in the data stream to the deleted transmit data entry need to be recalculated because the data blocks will not be stored in a similar place as they were prior to the deletion. The recalculation process will proceed identical to step **1030** as if the removed or deleted transmit data entry had never occurred for each of the subsequent transmit data entries.

FIG. **49** illustrates a logic diagram that may be used to read the data from the memory in the DMT transmitter or used to store the data in a DMT receiver. At step **1048**, the process begins by setting an initial read address equal to the initial address in the Manchester encoder, or dual stage memory, upon receipt of an enable signal. Having done this, the process proceeds to step **1050** wherein a number of bits for a first data block is retrieved from the carrier channel allocation table or database. Next, the process proceeds to step **1052** wherein a block count is set to one.

At **1054**, at a clock cycle, a first entry of the first data block is read. In other words, the first bit, or first byte, of the first data block is read. This occurs on a clock cycle by clock cycle basis. Having read the data, the process proceeds to step **1056** wherein the address and the block count are incremented by one.

At step **1058**, a determination is made as to whether the newly incremented block count equals the number of bits for the data block being read. If not, the process proceeds to step **1060** wherein, at a subsequent clock cycle, the next entry, or bit, in the data block is read. Having done this, the address and block count are incremented by one and a subsequent determination is made at step **1058**.

When the block count equals the number of bits of the data block, the process proceeds to step **1062** where a determination is made as to whether all of the data blocks have been read. If all the data blocks have been read, the process is complete for this frame cycle. If not, the process proceeds to step **1064** by retrieving the address pointer and number of bits for the next data block. Having retrieved this information, the process reverts to step **1052** and follows the logic flow as previously described.

FIG. **50** illustrates a logic diagram which may be utilized by the DMT receiver to generate an address pointer. At step **1062**, for a first data block allocated to the first carrier channel allocation entry of the carrier channel allocation table, or database, an address pointer is assigned to be the initial address of the write section of the Manchester encoder, or dual stage memory. As mentioned with the previous figure, the write section is the first stage of the dual stage memory during the first frame cycle and the second stage during the second frame cycle. Next, the process proceeds to step **1064** where a determination is made as to whether there is another carrier channel allocation entry in the carrier channel allocation table. If not, the process proceeds to step **1066** where a determination is made as to whether a change occurs in the carrier channel allocation table. If not, the process waits at step **1066** for a change in the carrier channel allocation table to occur.

Once the carrier channel allocation table has changed, the process reverts back to step **1062** wherein all of the carrier channel allocation entries receive a new address pointer, starting with the first carrier channel allocation entry, which corresponds to the first data block, in the carrier channel allocation table.

If the answer to step **1064** is yes, the process proceeds to step **1068** where an address pointer is determined for the next data block, or next carrier channel allocation entry, by adding the number of bits for the previous data block to the address pointer of the previous data block. Thus, if the previous data block had 10 bits and its address pointer of the previous data block was **20**, the address pointer for the new data block, or carrier channel allocation entry, would be **30**. Having made this calculation, the process reverts back to **1064**.

FIGS. **51–61** illustrate examples of the operation of the present invention. FIG. **51** illustrates a data stream **1070**, which includes a plurality of frames. Frame (n+1 ) **1072** is shown in greater detail to include a plurality of data entries. As shown, the first data entry contains outbound control channel information, a second data entry includes a first data call, a third data entry includes a second data call, and a fourth data entry includes a third data call. The actual information contained within the frame **1072** is a data stream as depicted in **1074**.

As previously described, when a data entry cannot be supported by a single carrier channel, the data entry is broken down into data blocks, wherein a data block is allocated to a particular carrier channel. As shown, the partitioning of the data entry into data blocks equates data blocks of the third data call to particular carrier channels. As is known in the ADSL art, a carrier channel can be represented as a vector **1076**, wherein the magnitude and phase of the vector is based on the data which the carrier channel is carrying and the bit loading of the carrier channel. The bit loading of a carrier channel indicates the number of constellation points, i.e., the number of magnitude and phase combinations for the vector. For example, if the bit loading of a carrier channel is 2, the number of constellation points is 4 (22) which can be equated to a binary numbering system. Thus one constellation point equates to the binary number 00, a second point to binary number 01, etc. From this, one skilled in the art will readily appreciate how the bit loading of a carrier channel equates to the number of bits the carrier channel can support, or carry.

FIG. **51** further illustrates three carrier channels shown as a vector **1076**, each representing a particular data block of the third data call. Thus, the data block on the far left of the data entry equates to the carrier channel vector on the far left. The second data block equates to the second carrier channel vector and the third data block equates to the third carrier channel vector. Each of these carrier channel vectors may be used to produce a particular quadrature amplitude modulated (QAM) signal **1078** at a given frequency. As previously mentioned, the ADSL system incorporates 256 carrier channels, beginning at 25 kilohertz up to 1.1 MHz at increments of 4 kilohertz.

The final illustration of FIG. **51** is a time domain DMT symbol **1080**. As mentioned, the ADSL transmitter includes a DMT modulator. The DMT modulator takes the digital representations of the constellation encoding **1076**, or the vector representations of the carrier channels, and produces the time domain DMT symbol **1080**. In essence, the time domain DMT signal is the summation of the carrier channels **1078** to produce the resultant DMT symbol. Note that the DMT symbol **1080** is depicted for one frame. Thus, for each frame, a new DMT symbol is generated in a like fashion.

FIG. **52** illustrates memory **1082**, which may be incorporated in the controller's memory of the primary site, in the controller's memory of the secondary site, or in an ADSL data interface unit. The memory, as shown, stores a plurality of site outbound bit loading tables **1084**, wherein each of the site outbound bit loading tables contains a channel field and a corresponding bit loading field. Thus, as shown, carrier channel zero has a bit loading of 13 bits, carrier channel **1** has a bit loading of 14 bits, etc.. The memory further stores a plurality of site inbound bit loading tables **1086**. The site inbound bit loading tables are based on an inbound transmission path wherein the site outbound bit loading tables **1084** are based on an outbound transmission path.

The memory **1082** further stores a bit rate data base **1096**. The bit rate data base includes a call type field, a data rate field, and a bit requirement field. For example, the first entry is an audio type **1**, which has a bit rate requirement of 8 Kbps. For the ADSL system, this translates to a 2 bit per frame requirement. Recall that the frame rate of the ADSL system is 4 KHz, thus the bits per frame requirement is the result of the bit rate requirement divided by the 4 KHz rate.

The memory **1082** further stores an inbound carrier channel requirement table **1094**. This table indicates for each call the number of inbound channels in use. Although not shown, the memory also includes an outbound carrier channel requirement table which stores the number of outbound

carrier channels used for a particular call. In addition, this information is used to generate the carrier channel allocation database.

Memory **1082** further stores the current call lowest common denominator bit loading tables **1092**. For example, one current call bit table is an outbound control channel bit loading table which is shown to have carrier channel zero having 11 bits, carrier channel one having 11 bits, carrier channel two having 10 bits, etc. The creation of a call bit loading table was previously described to be a compilation of a set of site outbound bit loading tables for the outbound transmission path and a compilation of a set of site inbound bit loading tables for an inbound transmission path.

The next portion of memory **1082** includes a geographical call assignment database **1090**. This call assignment database includes, for each call, the sites that are supporting the call. Recall that a site is supporting a call when a targeted subscriber is affiliated with the site.

The memory **1082** also stores an outbound carrier channel allocation table **1088** and an inbound carrier channel allocation table (not shown). The inbound and outbound channel allocation tables contain the same fields, i.e. a carrier channel field, a bit loading field, an allocation field, and an address pointer field. The outbound carrier channel allocation table **1088** shows that the first carrier channel has 11 bits, is allocated to the first data block of outbound control, and has an address pointer of zero. The second carrier channel has 11 bits, is allocated to the second data block of the outbound control channel, and has an address pointer of 11. The data for the remaining carrier channels has similar type data. From these tables, the controller that has access to them can perform any of the functions previously described.

To further illustrate the operation of the present invention, refer to FIG. **53** which illustrates, for a 10 carrier channel system that includes six sites, a plurality of site bit loading tables. The site bit loading tables are generated by transmitting a training signal to the respective site over a particular transmission path, i.e., the inbound path or the outbound path, and determining a spectral response of the transmission path based on the training signal. Thus, the site bit loading for site **1**, **1098**, has the 10 carrier channels and their corresponding bit loading. For example, carrier channel zero has a bit loading of 10 bits, carrier channel **1** has a bit loading of 11 bits, etc. The site bit loading tables for sites **2–6** **1100–1108** are shown to include a variety of bit loadings for the corresponding carrier channels.

From the plurality of site bit loading tables shown in FIG. **53**, a control channel bit loading table **1110**, as shown in FIG. **54**, may be generated. The generation of this table requires both FIG. **53** and FIG. **54** to be reviewed simultaneously. To create a control channel bit loading table, each of the site bit loading tables needs to be compared simultaneously on a carrier channel by carrier channel basis. For carrier channel zero, the bit loading in each of the site bit loading tables **1098–1108** is compared to identify the lowest bit loading. Reviewing, for carrier channel zero, the bit loading in site **1** is 10 bits, in site **2** it's 11, in site **3** it's 12, in site **4** it's 11, in site **5** it's 15, in site **6** it's 15. Thus, the lowest bit loading for carrier channel zero appears in the site bit loading table **1098** for site **1**. This value is stored in the control channel LCD bit table or control channel bit loading table **1110** for carrier channel zero. A similar comparison is done for the remaining channels.

Having generated the LCD bit loading table, the table is ordered based on the constellation encoding function used within the DMT transmitter. The exemplary constellation encoding function depicted is a largest bit loading carrier channel to smallest bit loading carrier channel. Thus, the ordered bit loading table **1112** has the carrier channels arranged by their bit loading. The first entry in the ordered bit loading table is carrier channel **1**, which has 11 bits, then carrier channel **2**, which also has 11 bits, then carrier channel **3**, which also has 11 bits, and so on. The ordered bit loading table is achieved by scanning the LCD bit table **1110** from a top-down fashion. Thus, the first largest bit loading is the first entry in the bit loading table. The ordered bit loading continues by scanning the bit loading table and even if it finds a bit loading that matches a carrier channel, it would be a subsequent entry in the ordered bit loading table. For example, as shown, carrier channels **1**, **2** and **3** all have a bit loading of 11 bits. But, from the scan, carrier channel **1** is detected first followed by carrier channel **2**, then carrier channel **3**. The remaining order of the carrier channels is followed in a similar manner.

Having created the ordered bit loading table **1112**, the bit requirements for the control channel is determined. For this example, it was determined that 22 bits per frame were required. Thus, utilizing the channel allocation procedures described herein, the ordered bit loading table is scanned from a top-down approach. The first inquiry is whether the required number of bits exceeds the maximum bit loading of the first entry in the ordered bit table. In this case, the number of required bits is 22, which exceeds the 11 bits of carrier channel **1**. Thus, in this case, the first carrier channel is allocated to a first portion, or first data block of the data entry designated as the outbound control channel. Next, a remaining number of bits is calculated by subtracting the bit loading for carrier channel one from the number of required bits. Thus, for this example, that equation is 22–11, which yields 11 remaining bits.

The 11 remaining bits are then used to scan the ordered bit loading table, less the first carrier channel which has already been allocated. Thus, the scanning determines that the remaining number of required bits does not exceed the maximum bit loading of a carrier channel within the ordered bit loading table. Having made this decision, the process determines whether a match occurs between a bit loading of a particular carrier channel and the remaining number of required bits. As shown, carrier channel **2** has a bit loading of 11 bits which matches the remaining number of required bits, which is the first match found in a top-down scan. Therefore, carrier channel **2** is allocated to the second data block of the data entry designated outbound control channel.

Having made these allocations, address pointers are determined based on the manner in which the data will be stored within the write section of the dual stage memory. Because the outbound control channel is the fast data entry, the first data block of the outbound control channel will have an address pointer of zero. The second data block of the outbound control channel will have its address pointer at **11**. This is calculated by adding the address pointer of the first data block to the number of bits in the first data block. In this case, the address pointer is zero plus 11 (the number of bits) thus providing the address pointer of 11.

Having determined this information, the carrier channel allocation table **1114** is generated showing the carrier channels in the ordered bit loading fashion. The table includes the number of corresponding bits, the allocation to the particular data block, address pointer information, and bit reduction information. The bit reduction information will be discussed below.

FIG. **55** illustrates an example of when a first data call is added to the data being transmitted. For this call, assume that

8 bits are required and only sites **5** and **6** are supporting this particular call. Given this information, an LCD call bit loading table **1116** is generated from the site bit loading tables **1006** and **1008**. As shown in FIG. **53**, the bit loading for channel zero in site **5** is 15 and the bit loading for channel zero in site **6** is 15. Thus, the lowest bit loading between these two sites is 15, which is the value entered into the table **1116**. The bit loading for carrier channel **1** of site **5** is 15 bits and the bit loading for carrier channel 1 of site **6** is 14 bits. Fourteen, being the lesser of the two values, is entered into the bit loading table **1116** and the process continues for each of the carrier channels in sites **5** and **6** to create a completed LCD bit loading table **1116**. In addition to generating the table, allocation information is added as an addendum to the call table, indicating that carrier channels one and two are already allocated to the outbound control channel. Thus, when generating the ordered bit table of available carrier channels, carrier channel **1** and **2** are omitted from table **1120**.

Having generated the order bit loading table **1120**, the carrier channel allocation process first determines whether the bit requirements is greater than the maximum number of bits available in a given carrier channel. In this case, the bit requirements are 8 bits, while the maximum bit loading for a carrier channel is 15 bits. Thus, the answer to this inquiry is negative such that the next step is to find a carrier channel that has a bit loading which matches the bit requirements. In this case, the match occurs **1118** at carrier channel **7**, which has a bit loading of 8 bits.

Having identified carrier channel **7** as the appropriate carrier channel, the carrier channel allocation table **1122** is updated to include the allocation of carrier channel **7** to data call **1**. The updated carrier channel allocation table **1122** indicates that carrier channel **7** has 8 bits, is allocated to call **1**, has an address pointer of 22, and has zero bit reductions. The address pointer is generated by realizing that the data block for call **1** will follow the second data block of the outbound control channel in the data stream being transmitted to the data formatter. Thus, the address pointer for call **1** is determined by adding the address pointer for the second data block of the outbound control channel, which is 11, to the number of bits for that data block, which is also 11. Thus producing the address pointer **22**. Note that the remaining carrier channels have been reduced to 2 bits and have not been allocated. Thus they will be filled with null information. Note that as an alternative, the remaining bits that are not allocated to a call may be assigned a bit loading of zero bits, thus no information will be transmitted other than the information corresponding to a data entry.

FIG. **56** illustrates when a second data call is added to the system while the first call is still active. Assume that the bit requirement for the second data call is 16 bits and that the sites **1**, **2** and **3** are supporting the second data call. Given this information, an LCD bit loading table for call **2** is generated **1126**. In addition, the carrier channels that have already been allocated to a particular call are flagged, such that, when the ordered bit loading table **1132** is created, it is created using only available carrier channels.

To allocate carrier channels to the second data call, the process first determines whether the bit requirements exceed the maximum bit loading of the first carrier channel entry in the ordered bit loading table **1132**. In this case, the bit requirements are **16** while the maximum bit loading for a carrier channel is 11. Thus, the first carrier channel will be allocated to the call which is carrier channel **3**, and a remaining number of bits is determined. In this case remaining number of bits is 16 minus 11 which equals 5. Having done this, the process looks for a remainder match **1130** which is found in carrier channel **9**. Having made the carrier channel allocations as described in **1128** and **1130**, the carrier channel allocation table **1134** is updated to include the allocations for data call two.

FIG. **56** also illustrates a formatted data stream **1136** or an ordered data stream **1136**. The ordered data stream **1136** is based upon the carrier channel bit loading table wherein the first entry in the table is the first data block of the formatted data stream followed by the second data block and so on. Note that the address pointer information for call **2A** and call **2B** are also included in the carrier channel allocation table **1134**. The address pointer for call **2A** is determined by adding the address pointer of the previous data block, in this case call **1**, to the number of bits in the previous data block. In this case, the previous address was **22** and the number of bits in the previous block is **8**. Thus, the address pointer for call **2A** is **30**. The address pointer for call **2B** is calculated in a similar manner.

FIG. **57** illustrates the situation when a third call is added to the system with calls **1** and **2** still being active. In this case, it is assumed that the bit requirements for call **3** is 32 bits and sites **1–5** are involved in the call. An LCD bit loading table and in-use table for call **3** is generated **1138**. The LCD bit loading portion is based upon the site bit loading tables **1098–1106**. Once the bit loading table is generated for this particular call, an ordered bit loading table of available carrier channels **1150** is generated. From the ordered bit loading table **1150**, carrier channels are allocated based upon the bit requirements. At **1140**, the first available carrier channel is allocated to the call. Having allocated carrier channel zero to this call, a remaining bit value is calculated. For this case, the remaining bit value is 32 minus 10 which equals 22. At **1142**, due to the remaining number of required bits being greater than the maximum bit loading of a carrier channel, the next available carrier channel is allocated to the call. In this case, carrier channel **4**, which has a bit loading of **10**, is allocated to data call **3**.

Having made two data block allocations to call **3** a remaining number of bits is again calculated. In this case, the remaining number of bits is 22 minus 10 which equals 12. Again, the remaining number of bits exceeds the maximum bit loading of the remaining channels in the ordered bit loading table **1150** thus, at **1144**, the next available channel is allocated. In this case, carrier channel **5**, which has a bit loading of 8, is allocated the third data block of call **3**.

Given the three data block allocations, a remaining number of required bits is subsequently determined. The previous number of required bits was 12, subtracting the bit loading of carrier channel **5**, which is 8 bits, leaves a remainder of 4 bits. At this stage, remaining carrier channels have bit loading in excess of the remainder number of bits. Thus, the process looks for an exact match, which does not occur in this case. Without an exact match, the process then looks for a closest match. In this case, at **1146**, an overflow assignment is created by allocating carrier channel **8**, which has a bit loading of 8 bits, to the data call. In this case however, only 4 bits are required. Thus, the bit loading for carrier channel **8** is reduced to 4 bits. This is shown as **1148**. Thus, by allocating **4** data blocks to data call **3**, the bit requirements of the call can be met. Having made these carrier channel allocations, the carrier channel allocation bit loading table **1152** is updated to reflect the changes in the call assignments and the address pointer information. The ordered data stream or formatted data stream is depicted as **1154**.

FIG. **58** illustrates call **2** ending while call **1** and call **3** are still active. Given these parameters, the carrier channel

allocation table and address pointer information are updated in the carrier channel allocation table **1156**. To update the allocation field, the allocation of carrier channels to call **2**A and B are simply deleted. The updating of the address pointer information, however, is a little more difficult. To update address pointer information, the address pointers for call **3** need to be recalculated. With the deletion of call **2**, the first data block to be received after the data block for call **1** will be data block **3**A. Thus, the address pointer for **3**A will be 30. Address pointers for the remaining data blocks of calls **3** will be calculated as previously described by adding the address pointer of the previous data block to the number of bits of the previous data block.

Memory **1158** depicts how the data entries and their corresponding data blocks will be stored in the write section of the dual stage memory. Thus, the first data block will be stored at address **0**, the second data block at address **11**, and so on.

FIG. **59** illustrates the process of updating the site bit loading tables. Recall that the site bit loading information is updated on a periodic basis within the ADSL system or DMT system. This is required because the transfer function of the transmission paths regularly change due to weather variations. A comparison of the updated bit loading table for site **11160** and the site bit loading table **1098** in FIG. **53** shows that carrier channel **0** has increased its bit loading capabilities from 10 bits to 12 bits, carrier channel **1** has increased its bit loading capabilities from 11 bits to 12 bits, etc. A similar comparison may be made for sites **2**, **3**, **4**, **5**, and **6**. Given the updated site bit loading table, the call bit loading tables for current calls must be updated to determine whether the current carrier channel allocations provide sufficient bandwidth for the types of calls being supported.

FIG. **60** illustrates an updated control channel bit loading table. As shown, the new control channel bit loading table **1172** indicates the bit loading capabilities for each channel. Note that carrier channels **1** and **2** now have 12 bit capacity, respectively. In the previous carrier channel allocation they each had 11 bits. Thus, carrier channels **1** and **2** will still provide the required band width requirements for the control channel. Thus, even though the bit loading capabilities have increase, the bit loading table for these will be reduced by one bit such that carrier channel **1** and carrier channel **2** remain at 11 bits each. This will be reflected in the carrier channel allocation table and each carrier channel will have a bit reduction of 1 bit.

FIG. **60** also illustrates the updated call bit loading table for call **3**. Having generated this table the ordered bit loading table **1178** is generated and a determination is made as to whether the previously allocated channels provide a sufficient number of bits. As shown, the bits for the allocated carrier channels equals 39 which exceeds the 32 bit requirement. Thus, the updated bit loading for these carrier channels will provide adequate bandwidth and will be reduced to the previous values to maintain performance as achieved prior to the update.

FIG. **61** illustrates the updated call bit loading table **1180** for call **1**. The figure also illustrates the updated ordered bit loading table **1182** for call **1**. Note that the bit loading for carrier channel **7** has been reduced to seven bits. The seven bits is less than the required eight bits; thus, carrier channel **7** can no longer support call **1**. Given this, the available channels in the ordered bit loading table are scanned to determine if another carrier channel can support the call. In this case, carrier channel **6** which has a bit loading of nine bits has the closest match. Therefore, carrier channel **6** is allocated to call **1** and the information is updated in the carrier channel allocation table **1184**. Note that the bit reduction is also updated in the table.

The present invention provides a communication system infrastructure that utilizes DMT technology and twisted pairs as the interconnection medium. With such an apparatus and method, communication system infrastructure may be placed in areas where it was not achievable before. Typically, communication infrastructure required high data rate transmission infrastructure connections such as T1 links or microwave links. These high data rate transmission path requirements are eliminated by the present invention, thereby expanding the usefulness and areas in which communication systems may be established.

We claim:

**1**. A method for establishing an infrastructure for supporting a call on a wireline path to at least two targets, wherein the wireline path supports a plurality of carrier channels, the method comprising the steps of:

a) receiving a call request;

b) when the call request is valid, determining type of call requested based on the call request;

c) determining number of required bits based on the type of call requested;

d) determining location of the at least two targets based on the call request;

e) generating an ordered bit loading table for the call request; and

f) allocating at least one of the plurality of carrier channels to the call request when the at least one of the plurality of carrier channels is available.

**2**. The method of claim **1** further comprises routing identity of the at least one of the plurality of carrier channels to sites supporting the at least two targets.

**3**. The method of claim **1**, wherein step (a) further comprises receiving the call requested via an inbound control channel, wherein the inbound control channel includes a carrier channel of the plurality of carrier channels.

**4**. The method of claim **1**, wherein step (c) further comprises accessing a database of call type and corresponding bits required to determine the number of required bits.

**5**. The method of claim **1**, wherein step (e) further comprises:

accessing a database of site bit loading tables to retrieve site bit loading tables for sites supporting the at least two targets; and

determining, on a carrier channel by carrier channel basis, least bits per channel from the site bit loading tables of the sitessupporting the at least two targets to generate the ordered bit loading table.

**6**. The method of claim **1**, wherein step (a) further comprises requesting a call for at least one of video transmission, audio transmission, plain old telephone call, data file transfer, two way radio frequency communication, or radio frequency paging transmission.

**7**. The method of claim **1** further comprises, while processing the call request,

receiving a second call request;

when the second call request is valid, determining a second type

of call requested based on the second call request;

determining a second number of required bits based on the second type of call requested;

determining location of second targets based on the second call request;

generating a second ordered bit loading table for the second call request; and

allocating at least one other of the plurality of carrier channels to the second call request when the at least one other of the plurality of carrier channels is available.

**8**. The method of claim **1** further comprises generating a carrier channel in-use data base when the at least one of the plurality of carrier channels is allocated to the call request.

**9**. A method for establishing an infrastructure for supporting a call on an inbound wireline path and an outbound wireline path to at least two targets, wherein the inbound wireline path supports a plurality of inbound carrier channels and the outbound wireline path supports a plurality of outbound carrier channels, the method comprising the steps of:

a) receiving a call request;

b) when the call request is valid, determining type of call requested based on the call request;

c) determining number of required bits based on the type of call requested;

d) determining location of the at least two targets based on the call request;

e) generating an inbound ordered bit loading table for the call request;

f) generating an outbound ordered bit loading table for the call request; and

g) allocating at least one of the plurality of inbound carrier channels and at least one of the plurality of outbound carrier channels to the call request when the at least one of the plurality of inbound carrier channels and the at least one of the plurality of outbound carrier channels are available.

**10**. The method of claim **9** further comprises routing identity of the at least one of the plurality of inbound carrier channels and identity of the at least one of the plurality of outbound carrier channels to sites supporting the at least two targets.

**11**. The method of claim **10**, wherein the step of routing further comprises routing the identity of the at least one of the plurality of inbound carrier channels and the identity of the at least one of the plurality of outbound carrier channels to sites supporting the at least two targets via an outbound control channel, wherein the outbound control channel includes a carrier channel of the plurality of outbound carrier channels.

**12**. The method of claim **9**, wherein steps (e) and (f) further comprise:

accessing a database of site inbound bit loading tables to retrieve the site inbound bit loading tables for the sites supporting the at least two targets;

determining, on a carrier channel by carrier channel basis, least bits per channel from the site inbound bit loading tables of the sites supporting the at least two targets to generate the inbound ordered bit loading table;

accessing a database of site outbound bit loading tables to retrieve the site outbound bit loading tables for the sites supporting the at least two targets; and

determining, on a carrier channel by carrier channel basis, least bits per channel from the site outbound bit loading tables of the sites supporting the at least two targets to generate the outbound ordered bit loading table.

**13**. The method of claim **9** further comprises, while processing the call request, receiving a second call request;

when the second call request is valid, determining a second type of call requested based on the second call request;

determining a second number of required bits based on the second type of call requested;

generating a second inbound ordered bit loading table for the second call request;

generating a second outbound ordered bit loading table for the second call request; and

allocating at least one other of the plurality of inbound carrier channels and at least one other of the plurality of outbound carrier channels to the second call request when the at least one other of the plurality of inbound carrier channels and the at least one other of the plurality of outbound carrier channels are available.

**14**. The method of claim **9** further comprises generating an inbound carrier channel in-use data base when the at least one of the plurality of inbound carrier channels is allocated to the call request and generating an outbound carrier channel in-use data base when the at least one of the plurality of outbound carrier channels is allocated to the call request.

**15**. The method of claim **9** further comprises:

allocating radio frequency channels in the sites supporting the at least two targets when the call request is for a radio frequency communication; and

transmitting identity of the radio frequency channels to the sites supporting the at least two targets via an outbound carrier channel functioning as an outbound control channel.

**16**. The method of claim **15** further comprises:

receiving a portion of the radio frequency communication via one of the radio frequency channels;

converting the portion of the radio frequency communication into a discrete multi-tone formatted message; and

transmitting the discrete multi-tone formatted message via the at least one of the plurality of inbound carrier channels to a primary site.

**17**. The method of claim **16** further comprises:

receiving the discrete multi-tone formatted message by the primary site;

processing the discrete multi-tone formatted message to produce a processed discrete multi-tone message; and

routing the processed discrete multi-tone message to the sites supporting the at least two targets.

**18**. A method for transmitting digital information via a wireline path to at least two targets, wherein the wireline path supports a plurality of carrier channels, the method comprising the steps of:

a) receiving a digital information transfer request via an inbound control channel, wherein the inbound control channel includes a carrier channel of the plurality of carrier channels;

b) determining, from the digital information transfer request, type of digital information requested;

c) determining, based on the type of digital information requested and carrier channel in-use information, at least one available carrier channel of the plurality of carrier channels as an outbound transmission path;

d) transmitting identity of the outbound transmission path to target sites via an outbound control channel, wherein the outbound control channel includes another carrier channel of the plurality of carrier channels and wherein a target site of the target sites is affiliated with at least one of the at least two targets;

e) transmitting requested digital information, as identified by the digital information transfer request, to the target sites via the outbound transmission path; and

f) routing the requested digital information by the target sites to the at least two targets.

**19**. The method of claim **18**, wherein step (a) further comprises receiving, as the digital information transfer request, at least one of a video data transfer request, an audio data transfer request, a data file transfer request, an radio frequency paging request, a radio frequency two way communication request, or a plain old telephone request.

**20**. The method of claim **18**, wherein step (d) further comprises, prior to transmitting, determining the target sites from the digital information transfer request.

**21**. The method of claim **18** further comprises updating the carrier channel in-use information to include the outbound transmission path.

**22**. An apparatus for establishing infrastructure support for a call, the apparatus comprising:

an input that receives at least one call request;

memory that stores call type information and carrier channel allocation information; and

processor that is operably coupled to the input and the memory, wherein the processor allocates a carrier channel of a plurality of carrier channels to support the call based on the at least one call request and the carrier channel allocation information.

**23**. The apparatus of claim **22**, wherein the processor further comprises additional processing to determine, based on the at least one call request, bandwidth requirements for the call from the call type information.

**24**. The apparatus of claim **22**, wherein the processor further comprises additional processing to determine sites supporting the call and to determine a call bit loading table from bit loading tables of the sites supporting the call.

* * * * *