US008624844B2

(12) **United States Patent**
Behar et al.

(10) **Patent No.: US 8,624,844 B2**
(45) **Date of Patent: *Jan. 7, 2014**

(54) **PORTABLE COMPUTER WITH MULTIPLE DISPLAY CONFIGURATIONS**

(75) Inventors: **Yves Behar**, Oakland, CA (US); **Joshua Morenstein**, San Francisco, CA (US); **Christopher Hibmacronan**, Oakland, CA (US); **Naoya Edahiro**, San Francisco, CA (US); **Matthew David Day**, San Francisco, CA (US)

(73) Assignee: **LITL LLC**, Boston, MA (US)

(*) Notice: Subject to any disclaimer, the term of this patent is extended or adjusted under 35 U.S.C. 154(b) by 494 days.

This patent is subject to a terminal disclaimer.

(21) Appl. No.: **12/170,951**

(22) Filed: **Jul. 10, 2008**

(65) **Prior Publication Data**

US 2009/0244012 A1 Oct. 1, 2009

Related U.S. Application Data

(60) Provisional application No. 61/041,365, filed on Apr. 1, 2008.

(51) **Int. Cl.**
G06F 3/02 (2006.01)

(52) **U.S. Cl.**
USPC **345/169**; 345/168; 345/173; 345/184; 361/679.27; 455/575.3

(58) **Field of Classification Search**
USPC 345/184, 168–169, 156, 173; 361/679.3, 679.21, 679.26–679.27; 455/575.3
See application file for complete search history.

(56) **References Cited**

U.S. PATENT DOCUMENTS

3,468,576	A	9/1969	Beyer et al.	
4,939,514	A	7/1990	Miyazaki	
D333,636	S	3/1993	Issa	
5,200,913	A	4/1993	Hawkins et al.	
5,268,817	A	12/1993	Miyagawa et al.	
5,436,954	A *	7/1995	Nishiyama et al.	455/566

(Continued)

FOREIGN PATENT DOCUMENTS

CN	1292112 A	4/2001
DE	19952486	5/2001
EP	0588210	3/1993
EP	0588210 A1	3/1994
JP	5-197507 A	8/1993

(Continued)

OTHER PUBLICATIONS

http://laptop.org/en/laptop/start/ebook.shtml accessed on Sep. 29, 2008.

(Continued)

Primary Examiner — Lun-Yi Lao
Assistant Examiner — Sosina Abebe
(74) *Attorney, Agent, or Firm* — Lando & Anastasi, LLP

(57) **ABSTRACT**

A portable computer that is configurable between a laptop mode (in which the portable computer has a conventional laptop appearance) and an easel mode in which the base of the computer and its display component stand vertically forming an inverted "V." The portable computer includes a hinge assembly that couples the display component to the base of the computer, and allows the display component to be rotated about an axis along an interface between the display component and the base to configure the portable computer between a closed position, the laptop mode and the easel mode. The portable computer further comprises a scroll wheel and optional navigation buttons.

22 Claims, 25 Drawing Sheets

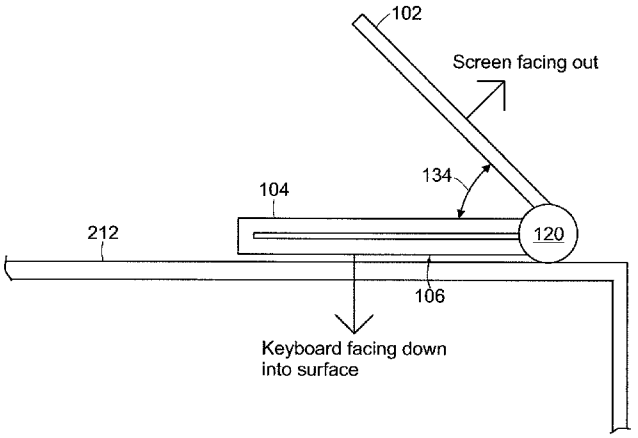

(56) **References Cited**

U.S. PATENT DOCUMENTS

5,515,345 A 5/1996 Barreira et al.
5,547,698 A 8/1996 Lansbergen et al.
5,712,760 A 1/1998 Coulon
D391,927 S 3/1998 Faranda
D392,944 S 3/1998 Issa
D395,868 S 7/1998 Iino
5,790,371 A 8/1998 Latocha et al.
5,793,355 A 8/1998 Youens
5,796,575 A * 8/1998 Podwalny et al. 361/679.27
D399,526 S 10/1998 Brady
5,825,352 A 10/1998 Bisset et al.
5,841,631 A 11/1998 Shin et al.
5,847,698 A 12/1998 Reavey et al.
5,900,848 A 5/1999 Haneda et al.
5,926,364 A 7/1999 Karidis
5,949,643 A 9/1999 Batio
D416,003 S 11/1999 Sciefer et al.
5,987,704 A 11/1999 Tang
6,005,767 A 12/1999 Ku
6,067,224 A 5/2000 Nobuchi
6,097,389 A 8/2000 Morris et al.
6,144,358 A 11/2000 Narayanaswamy et al.
6,222,507 B1 4/2001 Gouko
6,223,393 B1 5/2001 Knopf
6,262,885 B1 7/2001 Emma et al.
6,266,236 B1 7/2001 Ku
6,275,376 B1 8/2001 Moon
6,295,038 B1 9/2001 Rebeske
6,302,612 B1 10/2001 Fowler
6,323,846 B1 11/2001 Westerman et al.
D452,238 S 12/2001 Sugano
6,327,482 B1 12/2001 Miyashita
6,341,061 B1 1/2002 Eisbach et al.
6,343,006 B1 1/2002 Moscovitch
6,377,444 B1 4/2002 Price et al.
D462,069 S 8/2002 Gatto
6,437,974 B1 * 8/2002 Liu 361/679.27
D463,797 S 10/2002 Andre
6,464,195 B1 10/2002 Hildebrandt
6,492,974 B1 * 12/2002 Nobuchi et al. 345/156
6,510,049 B2 1/2003 Rosen
D476,326 S 6/2003 Tanimura
D479,708 S 9/2003 Hwang
6,628,267 B2 9/2003 Karidis
6,642,909 B1 11/2003 Oliva
6,659,516 B2 12/2003 Wang
6,661,426 B1 12/2003 Jetha
6,665,175 B1 12/2003 deBoer et al.
6,693,652 B1 2/2004 Barrus et al.
6,697,055 B1 2/2004 Bullister
D491,177 S 6/2004 Andre
D491,936 S 6/2004 Jao
D494,162 S 8/2004 Kondo
6,771,494 B2 8/2004 Shimano
D495,674 S 9/2004 Yoo
D495,694 S 9/2004 Chase
6,788,527 B2 9/2004 Doczy et al.
6,819,304 B2 11/2004 Branson
6,829,140 B2 12/2004 Shimano
6,859,219 B1 2/2005 Sall
D504,128 S 4/2005 Maskatia
6,882,335 B2 4/2005 Saarinen
6,944,012 B2 9/2005 Doczy et al.
6,963,485 B2 11/2005 Hong
D512,997 S 12/2005 Lee
6,972,752 B2 12/2005 Nako et al.
D513,509 S 1/2006 Kawa
D516,552 S 3/2006 Iseki
D517,541 S 3/2006 Maskatia
D518,042 S 3/2006 Kanayama
7,035,665 B2 * 4/2006 Kido et al. 455/566
D523,429 S 6/2006 Lin
7,061,472 B1 * 6/2006 Schweizer et al. 345/168
7,072,179 B1 7/2006 Curran et al.
D528,541 S 9/2006 Maskatia
D528,993 S 9/2006 Wilson
7,138,962 B2 11/2006 Koenig
D534,531 S 1/2007 Ogasawara
D535,292 S 1/2007 Shi
D544,846 S 6/2007 Kindle
7,239,508 B2 7/2007 Ferrucei
7,250,207 B1 7/2007 Heal et al.
7,366,994 B2 4/2008 Loui
7,428,142 B1 9/2008 Ligtenberg
D581,371 S 11/2008 Richmond
7,467,356 B2 * 12/2008 Gettman et al. 715/850
7,522,946 B2 4/2009 Im
D593,085 S 5/2009 Behar
D593,086 S 5/2009 Behar
D593,091 S 5/2009 Behar
D605,635 S 12/2009 Edahiro
7,698,407 B2 4/2010 Mattox, Jr. et al.
7,756,928 B1 7/2010 Meenan et al.
7,869,834 B2 * 1/2011 Seol et al. 455/567
2001/0032320 A1 10/2001 Abdelnur et al.
2002/0005818 A1 1/2002 Bruzzone
2002/0010707 A1 1/2002 Chang et al.
2002/0021258 A1 2/2002 Koenig
2003/0048595 A1 3/2003 Hsieh
2003/0107603 A1 * 6/2003 Clapper 345/784
2003/0109232 A1 6/2003 Park
2004/0001049 A1 1/2004 Oakley
2004/0203535 A1 10/2004 Kim
2004/0207568 A1 10/2004 Ooshima et al.
2004/0212602 A1 10/2004 Nako et al.
2004/0228076 A1 11/2004 Clapper
2005/0018396 A1 1/2005 Nakajima
2005/0041378 A1 2/2005 Hamada
2005/0063145 A1 3/2005 Homer et al.
2005/0083642 A1 * 4/2005 Senpuku et al. 361/681
2005/0091596 A1 4/2005 Anthony et al.
2005/0128695 A1 6/2005 Han
2005/0134717 A1 6/2005 Misawa
2005/0146845 A1 7/2005 Moscovitch
2005/0210399 A1 9/2005 Filner et al.
2005/0221865 A1 10/2005 Nishiyama et al.
2005/0257400 A1 11/2005 Sommerer
2005/0282596 A1 12/2005 Park et al.
2006/0126284 A1 6/2006 Moscovitch
2006/0238439 A1 * 10/2006 Fuller et al. 345/1.1
2006/0264243 A1 * 11/2006 Aarras 455/566
2006/0268500 A1 11/2006 Kuhn
2007/0138806 A1 6/2007 Ligtenberg et al.
2007/0182663 A1 8/2007 Biech
2007/0240076 A1 10/2007 Astala et al.
2007/0242421 A1 10/2007 Goschin et al.
2007/0247446 A1 * 10/2007 Orsley et al. 345/184
2008/0024388 A1 1/2008 Bruce
2008/0024465 A1 1/2008 Hawkins et al.
2008/0042987 A1 2/2008 Westerman et al.
2008/0062625 A1 3/2008 Batio
2008/0158795 A1 7/2008 Aoki et al.
2008/0174570 A1 7/2008 Jobs et al.
2008/0235594 A1 9/2008 Bhumkar et al.
2008/0284738 A1 11/2008 Hovden et al.
2009/0019383 A1 1/2009 Riley et al.
2009/0150826 A1 6/2009 Lyndersay et al.
2009/0190295 A1 7/2009 Chin et al.
2009/0244012 A1 10/2009 Behar et al.
2009/0244832 A1 10/2009 Behar et al.
2009/0275366 A1 11/2009 Schilling
2009/0300511 A1 12/2009 Behar
2009/0303676 A1 12/2009 Behar
2009/0322790 A1 12/2009 Behar
2010/0174993 A1 7/2010 Pennington

FOREIGN PATENT DOCUMENTS

JP 6090200 A 3/1994
JP 6-242853 A 9/1994
JP 6-259166 A 9/1994
JP 8-179851 A 7/1996
JP 10-111658 A 4/1998
JP 11-296259 10/1999

(56) **References Cited**

FOREIGN PATENT DOCUMENTS

JP	2001-167211	A	6/2001
JP	2004-302179	A	10/2004
JP	2005-159741	A	6/2005
JP	2005-242436	A	9/2005
JP	2006-227409		8/2006
KR	10-2000-0036647	A	7/2000

OTHER PUBLICATIONS

Miller, M., "Creating a Digital Home Entertainment System with Windows Media Center", Apr. 2006, Que.

Japanese Office Action mailed Dec. 4, 2012 from national phase entry of the corresponding PCT application.

Partial translation of Japanese Office Action from national phase examination of the Corresponding PCT application. (Letter dated Dec. 7, 2012 including English partial translation of JP OA dated Dec. 4, 2012).

Search Report from corresponding International Application PCT/US2009/038599 dated Mar. 6, 2009.

International Search Report from a commonly owned PCT application PCT/US09/39117, dated Sep. 29, 2009.

Final Office Action for Japanese Application No. 2011-503058 mailed Apr. 16, 2013, 3 pages.

* cited by examiner

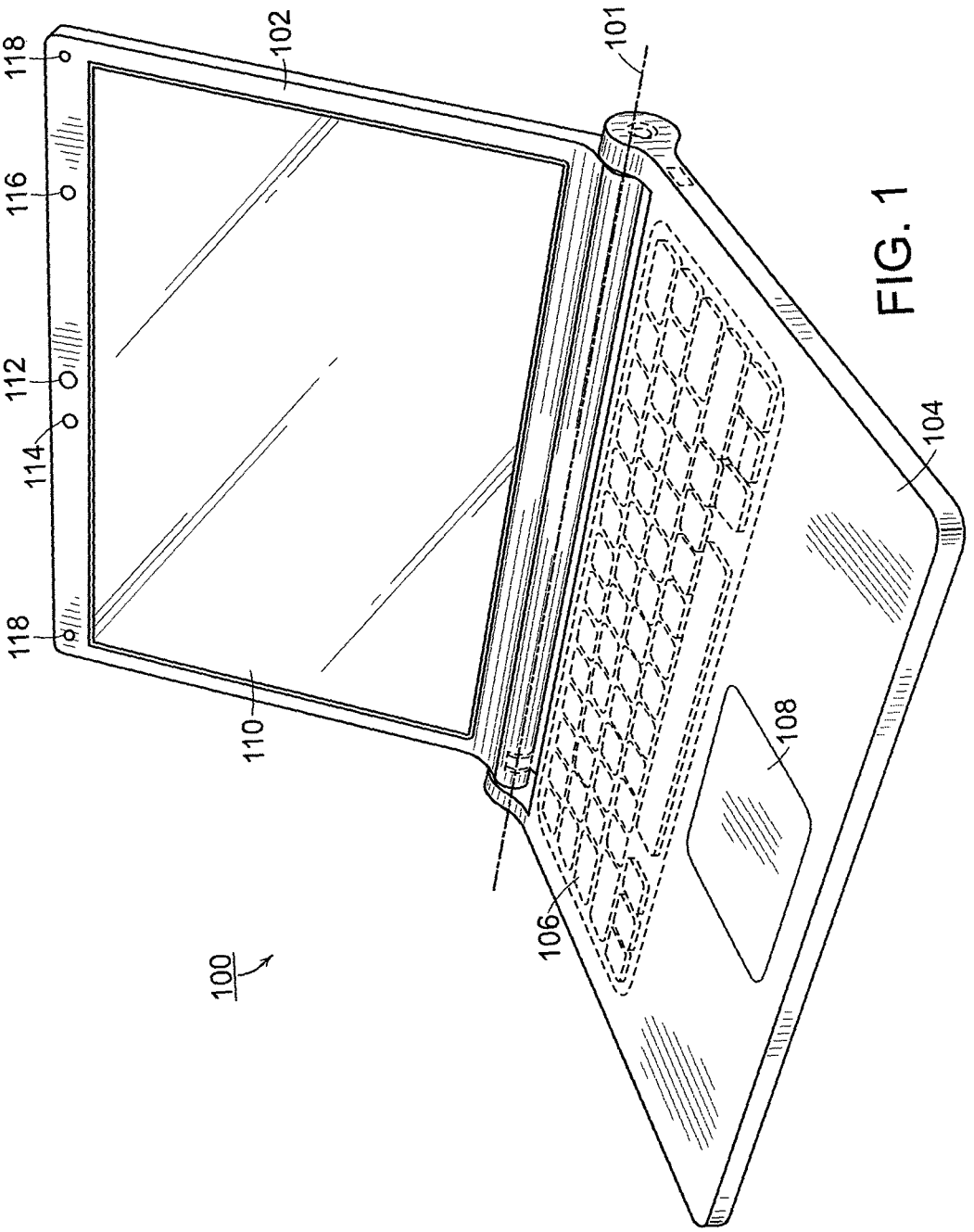

FIG. 1

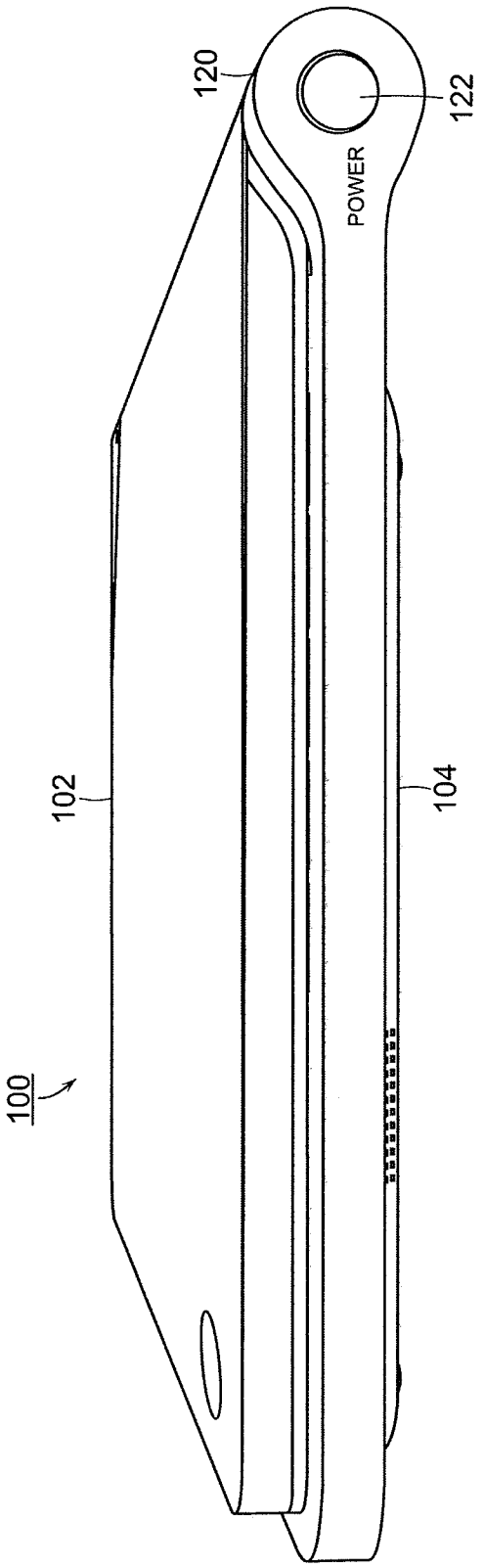

FIG. 2

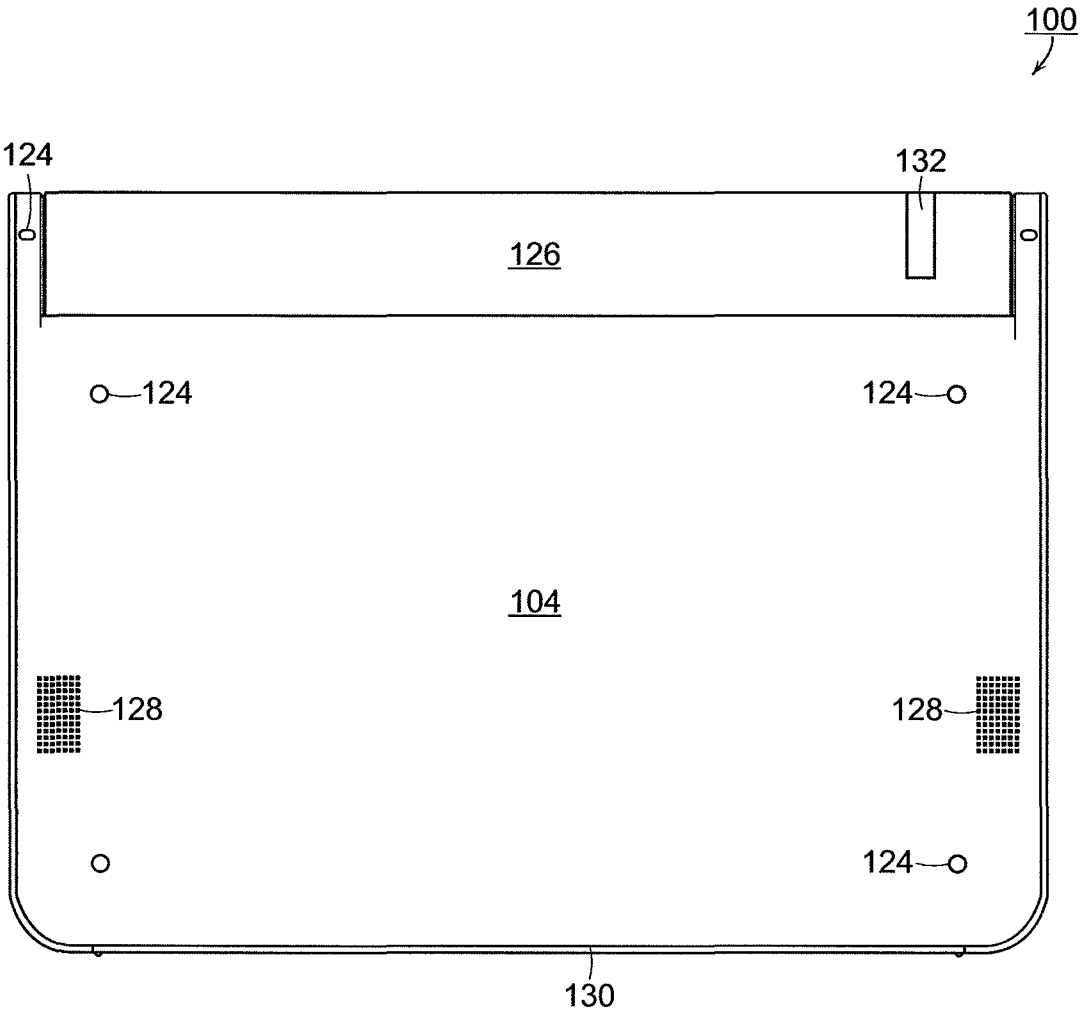

FIG. 3

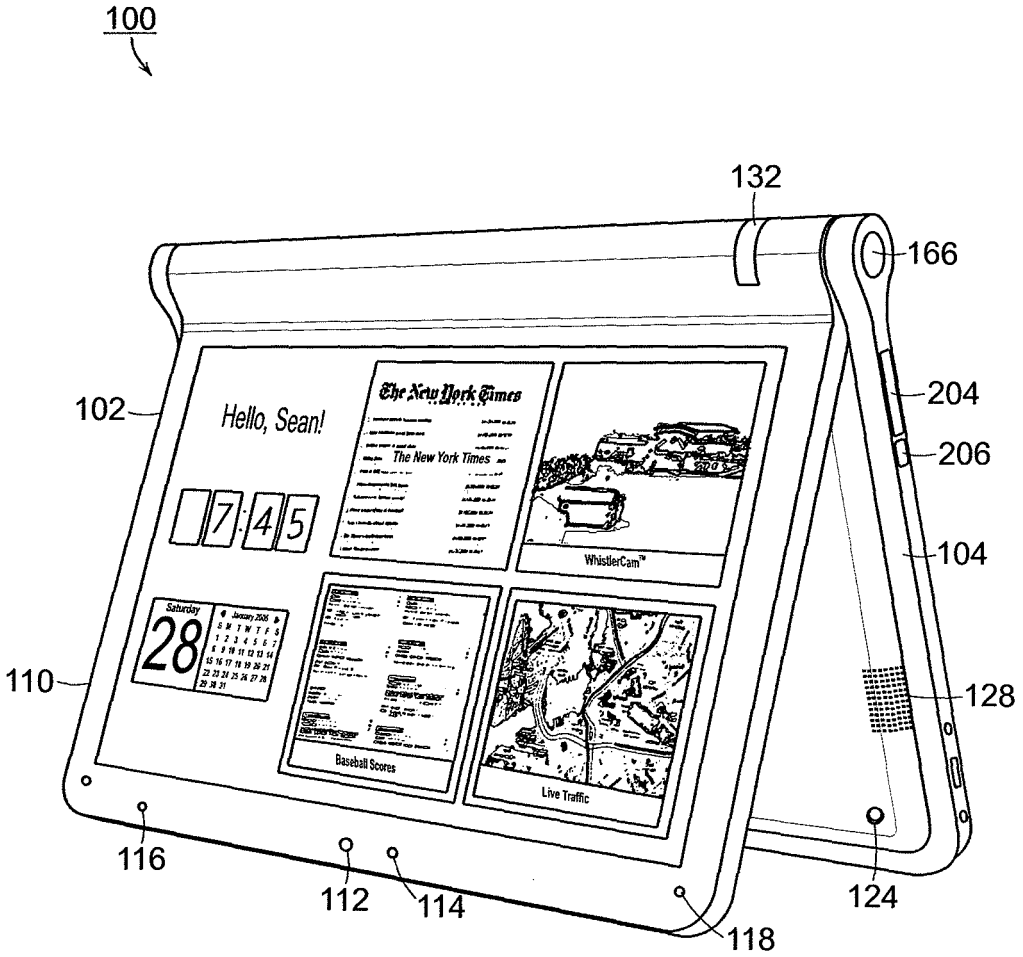
100
132
166
204
206
102
Hello, Sean!
The New York Times
The New York Times
7:45
WhistlerCam™
104
Saturday
28
January 2006
110
128
Baseball Scores
Live Traffic
116
112
114
124
118

FIG. 4

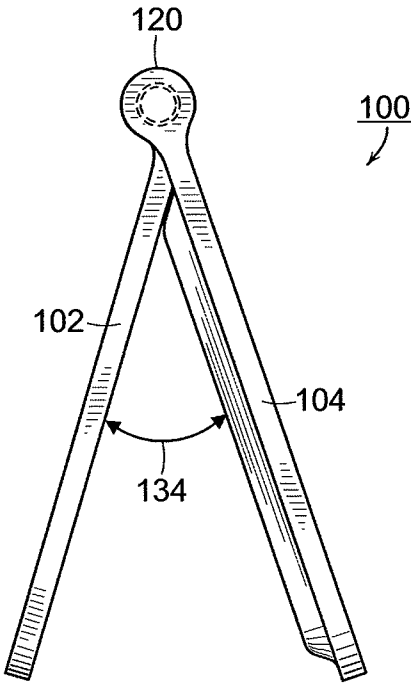

FIG. 5

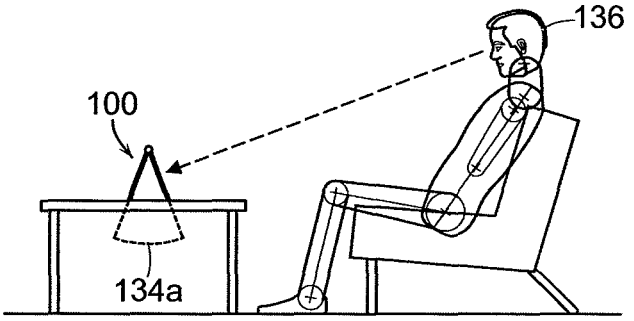

FIG. 6A

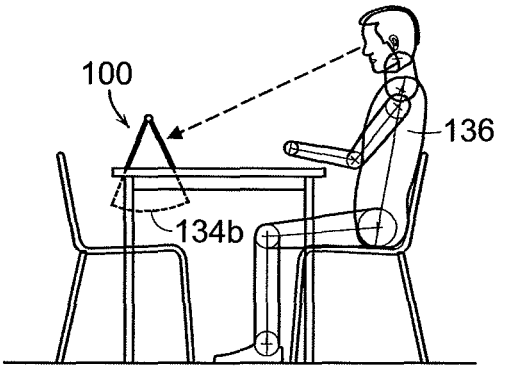

FIG. 6B

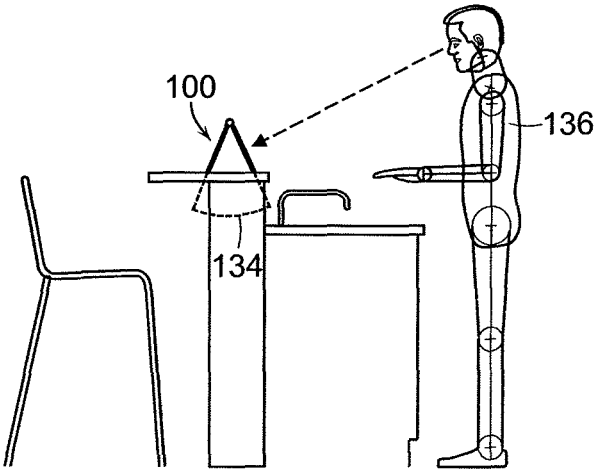

FIG. 6C

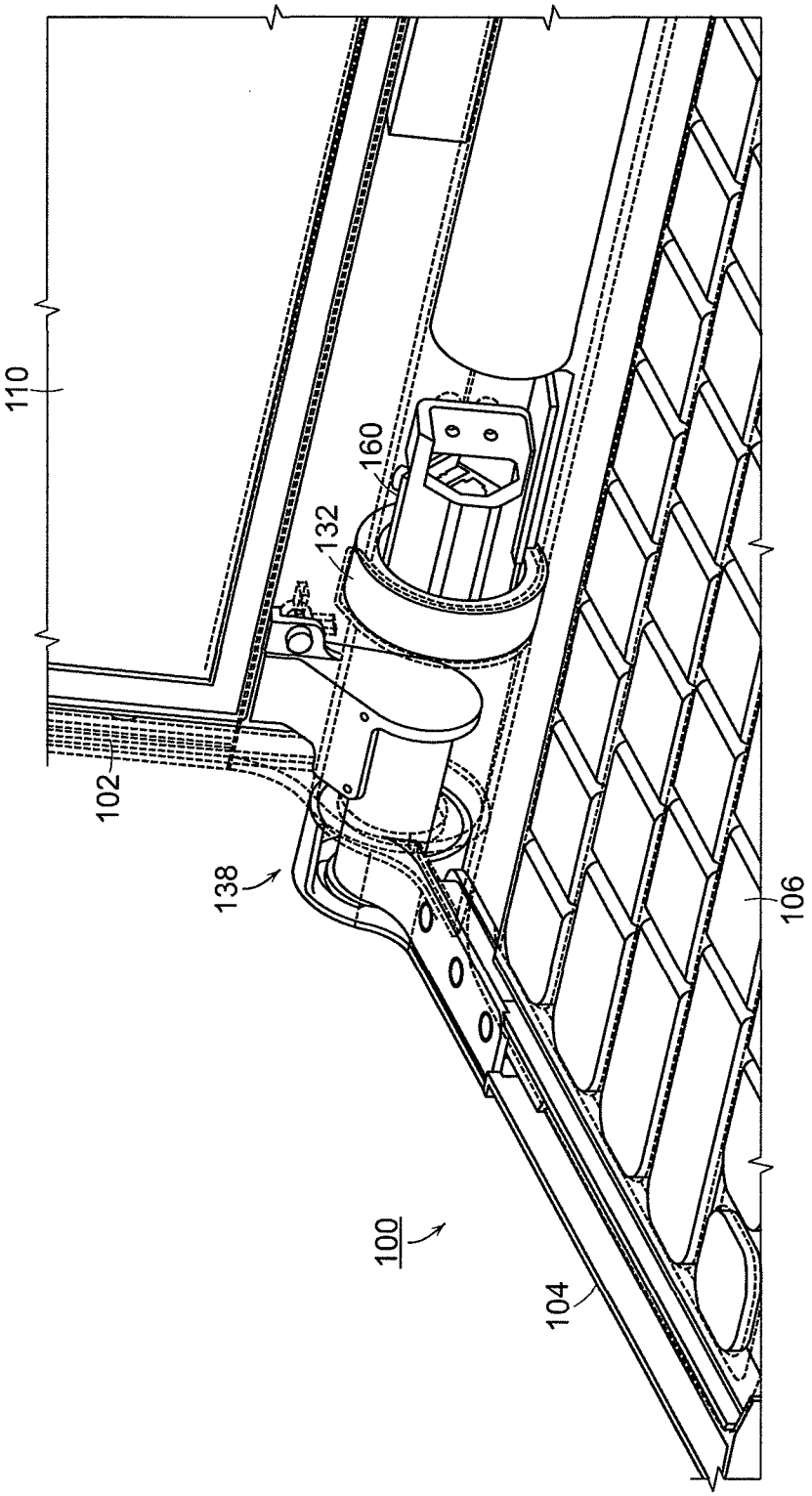

FIG. 7A

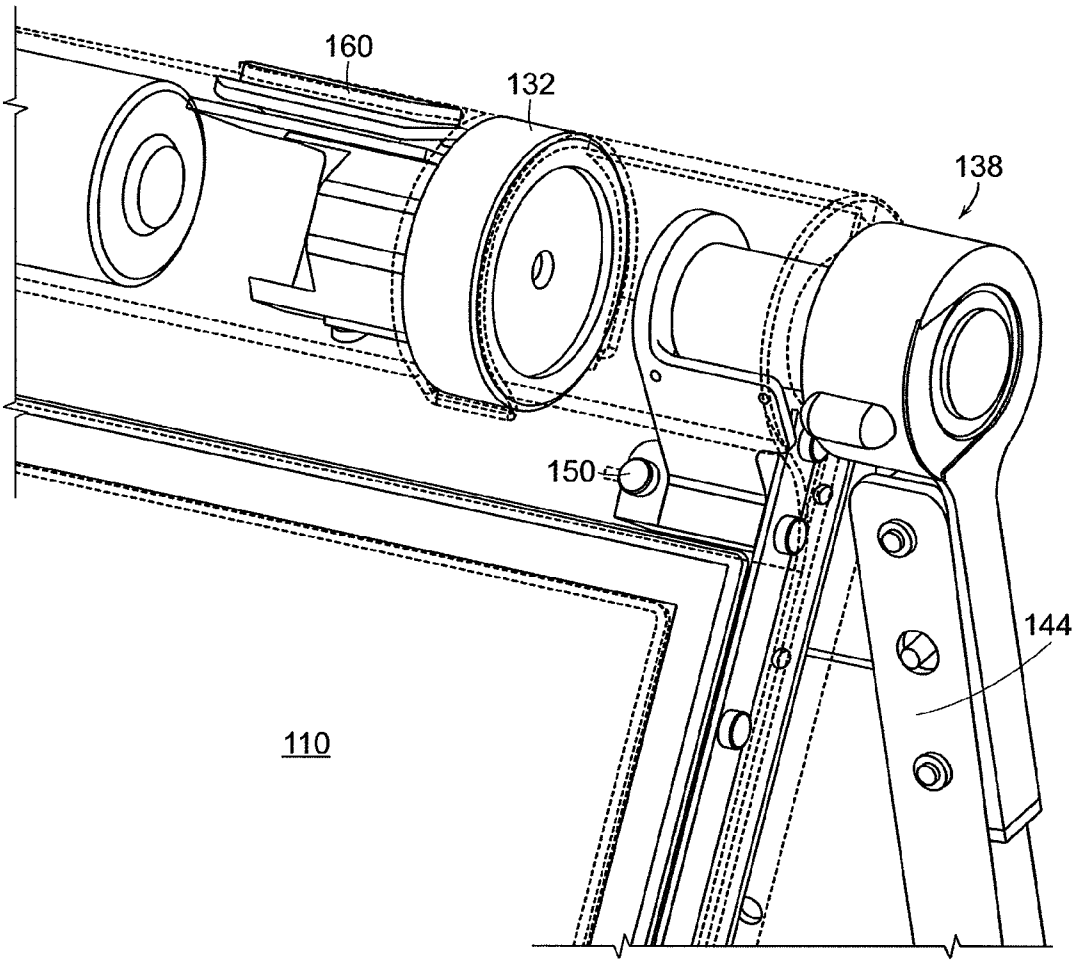

FIG. 7B

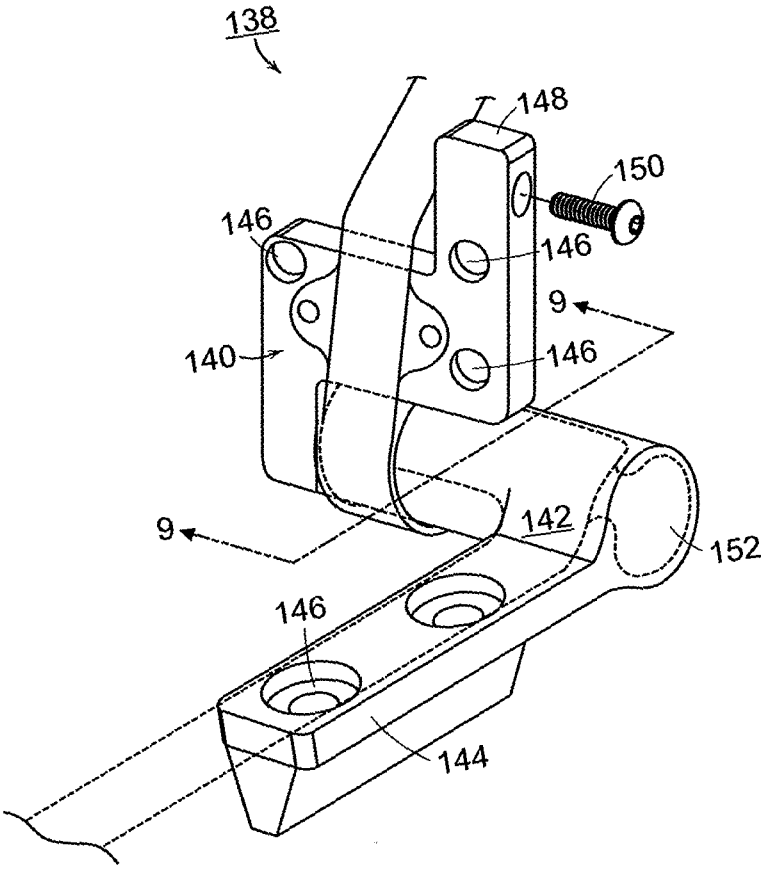

FIG. 8

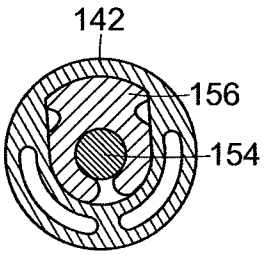

FIG. 9

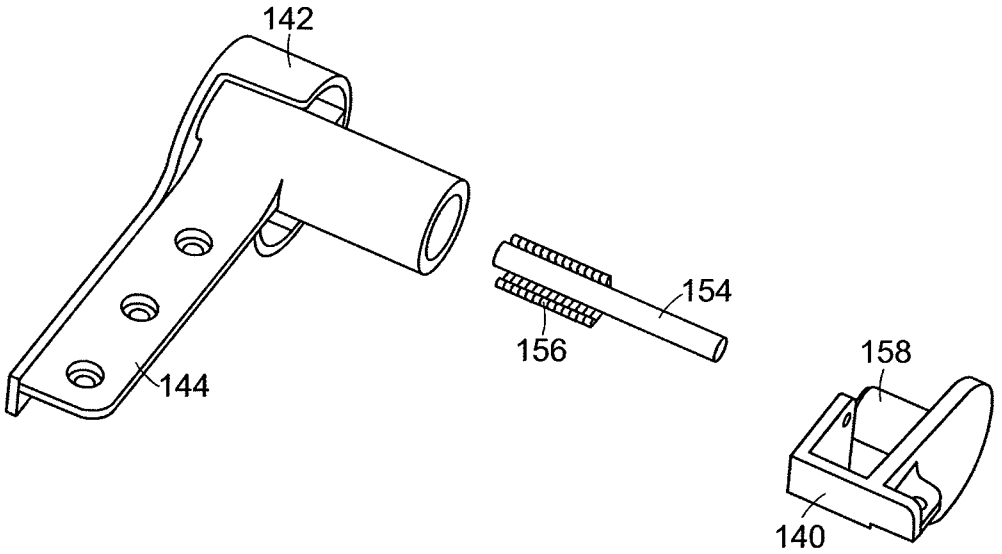

FIG. 10

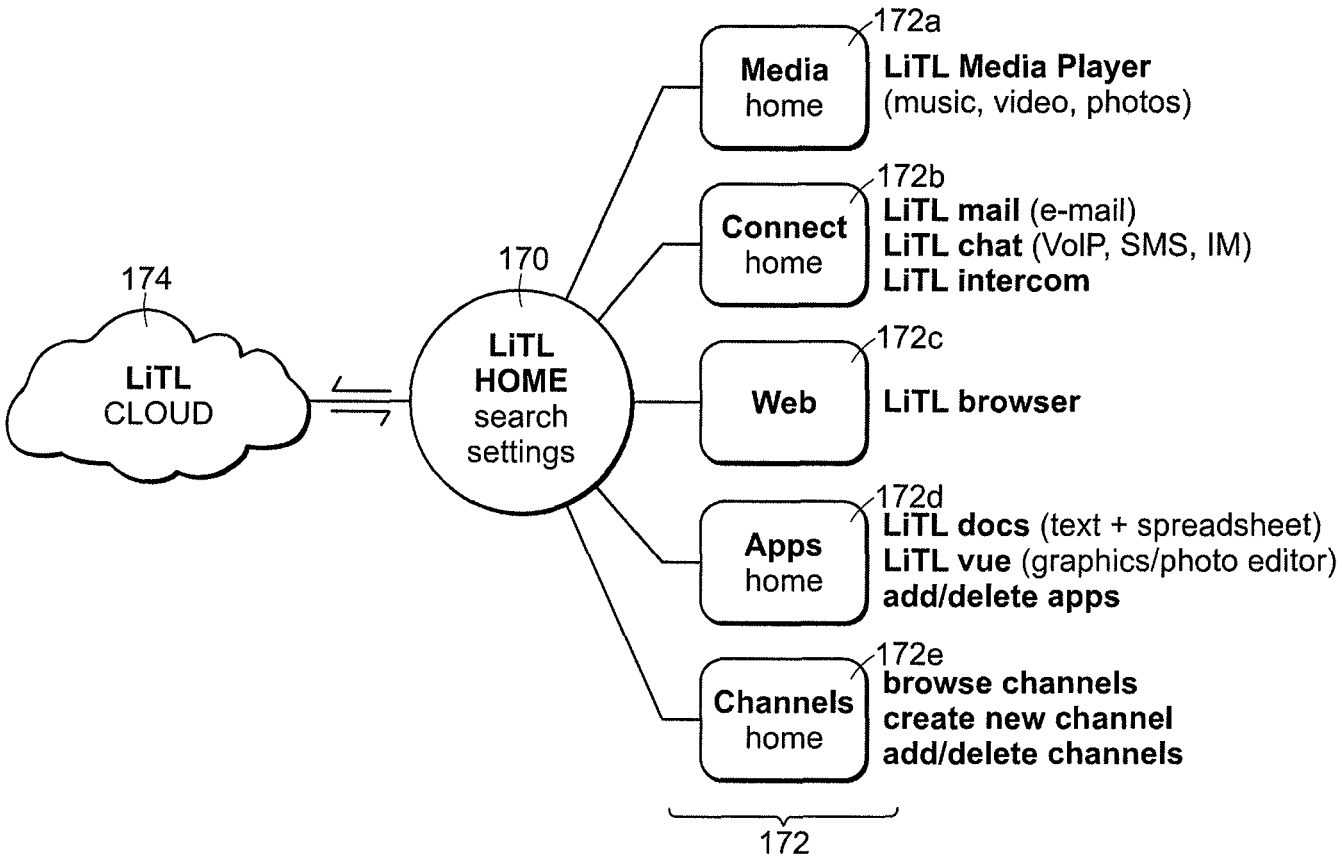
174
LiTL
CLOUD
170
LiTL
HOME
search
settings
Media
home
172a
LiTL Media Player
(music, video, photos)
Connect
home
172b
LiTL mail (e-mail)
LiTL chat (VoIP, SMS, IM)
LiTL intercom
Web
172c
LiTL browser
Apps
home
172d
LiTL docs (text + spreadsheet)
LiTL vue (graphics/photo editor)
add/delete apps
Channels
home
172e
browse channels
create new channel
add/delete channels
172

FIG. 11

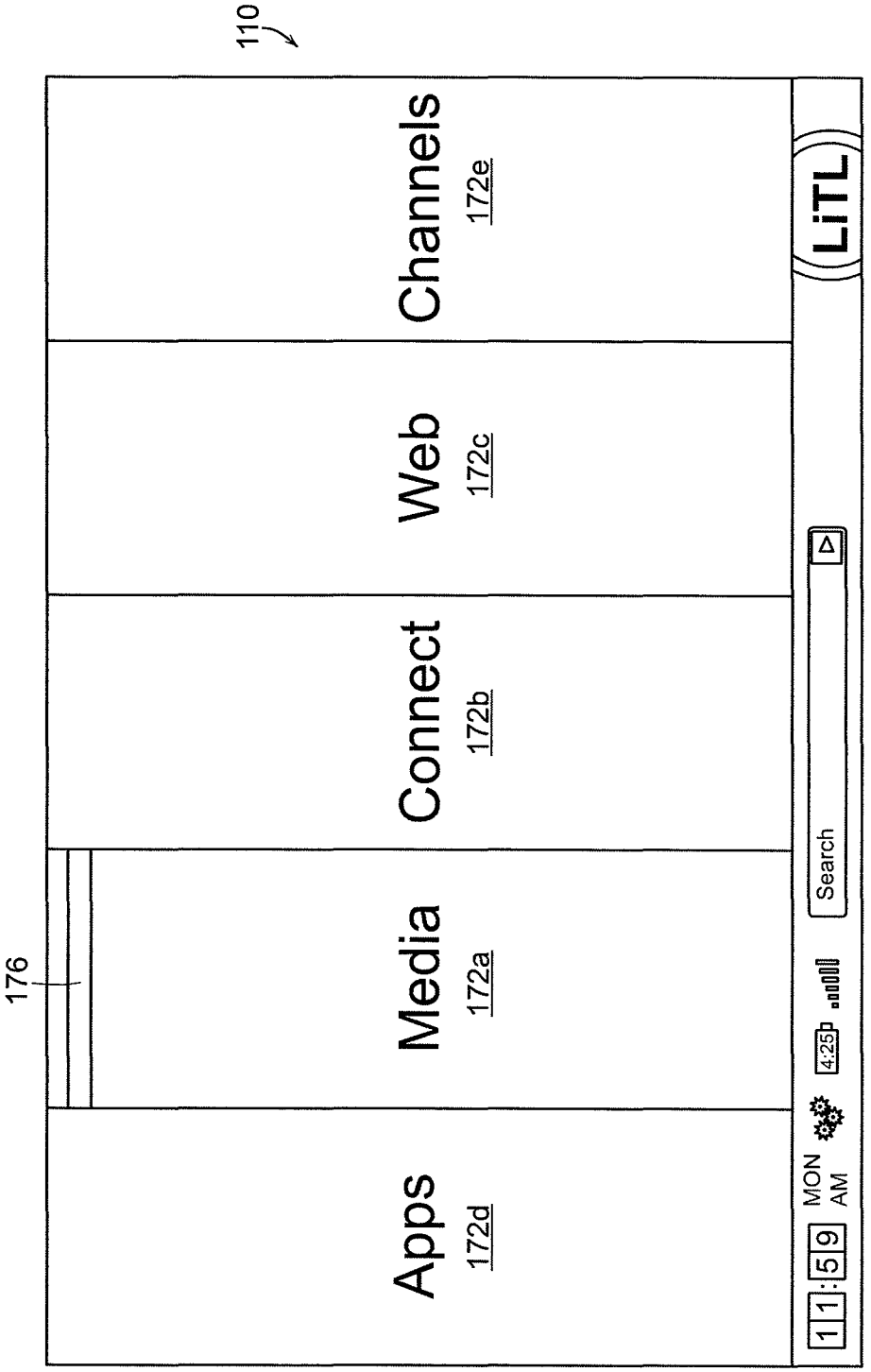
110
176
Apps
172d
Media
172a
Connect
172b
Web
172c
Channels
172e
11:59
MON
AM
4:25
Search
LiTL

FIG. 12

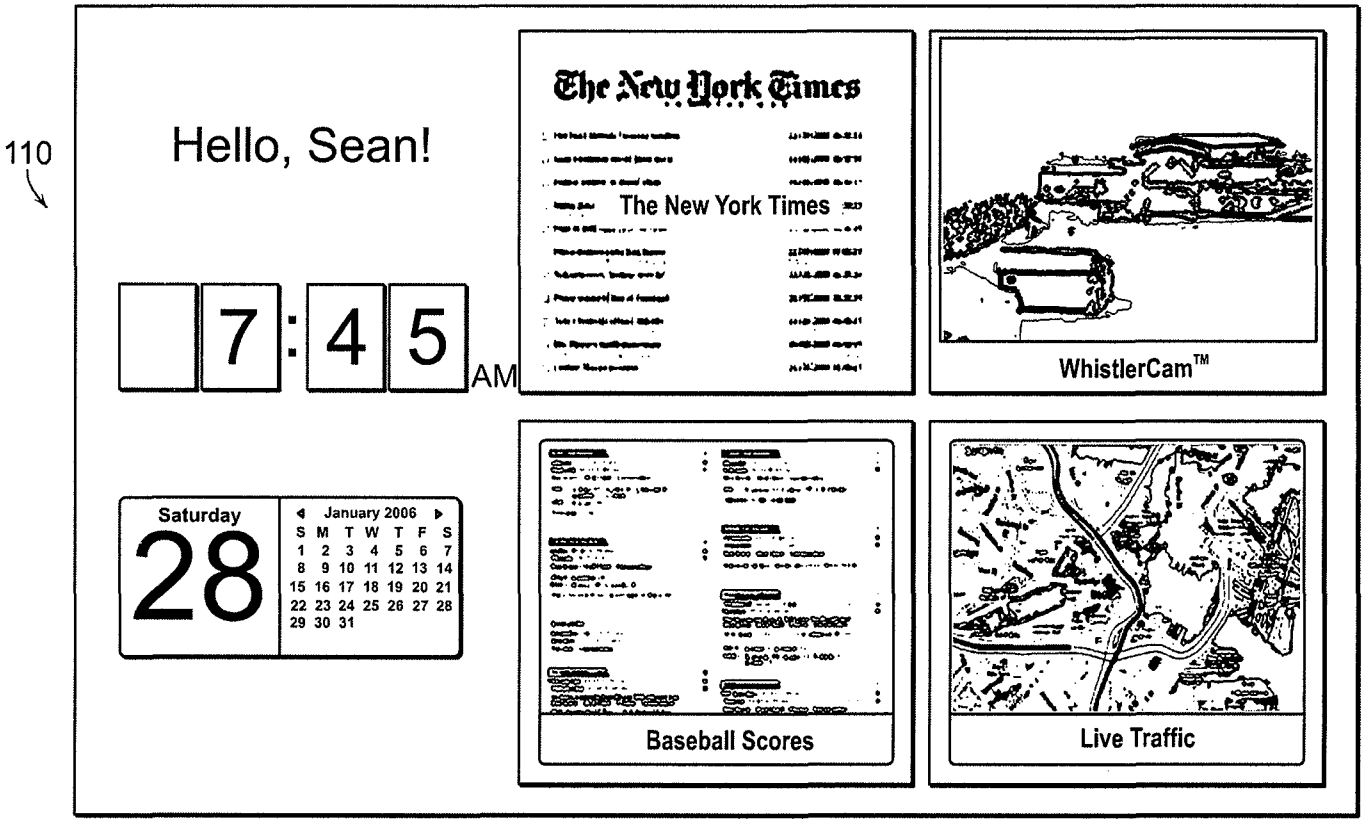
110
Hello, Sean!
7:45 AM
Saturday
28
January 2006
S M T W T F S
1 2 3 4 5 6 7
8 9 10 11 12 13 14
15 16 17 18 19 20 21
22 23 24 25 26 27 28
29 30 31
The New York Times
The New York Times
WhistlerCam™
Baseball Scores
Live Traffic

FIG. 13

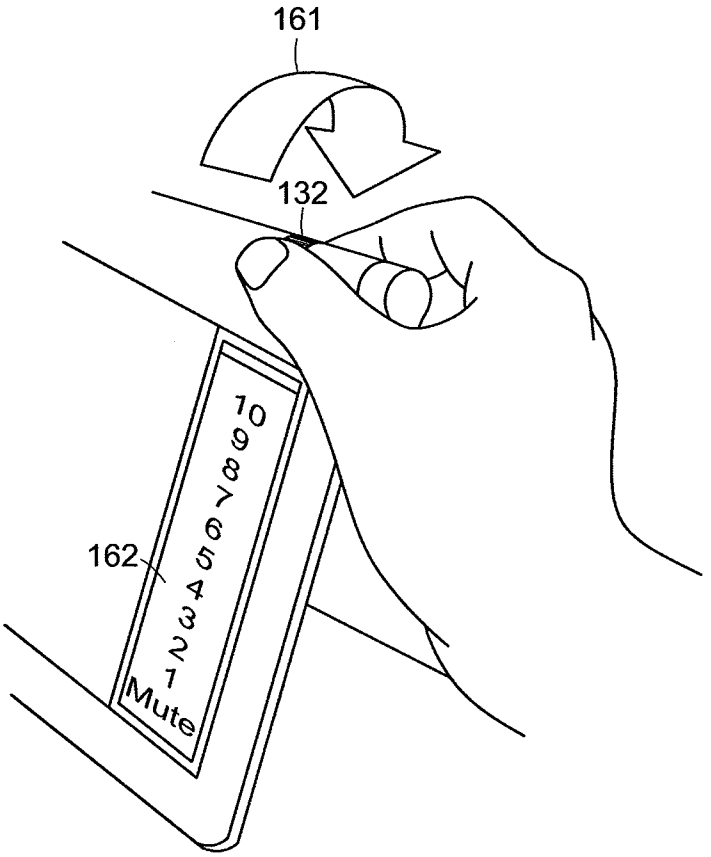

FIG. 14

FIG. 15

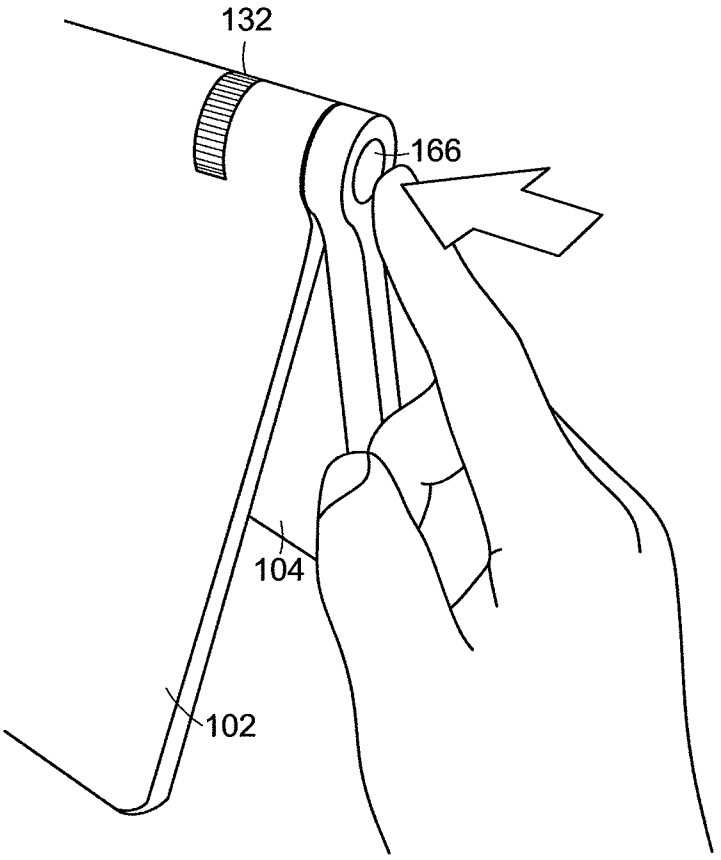

FIG. 16

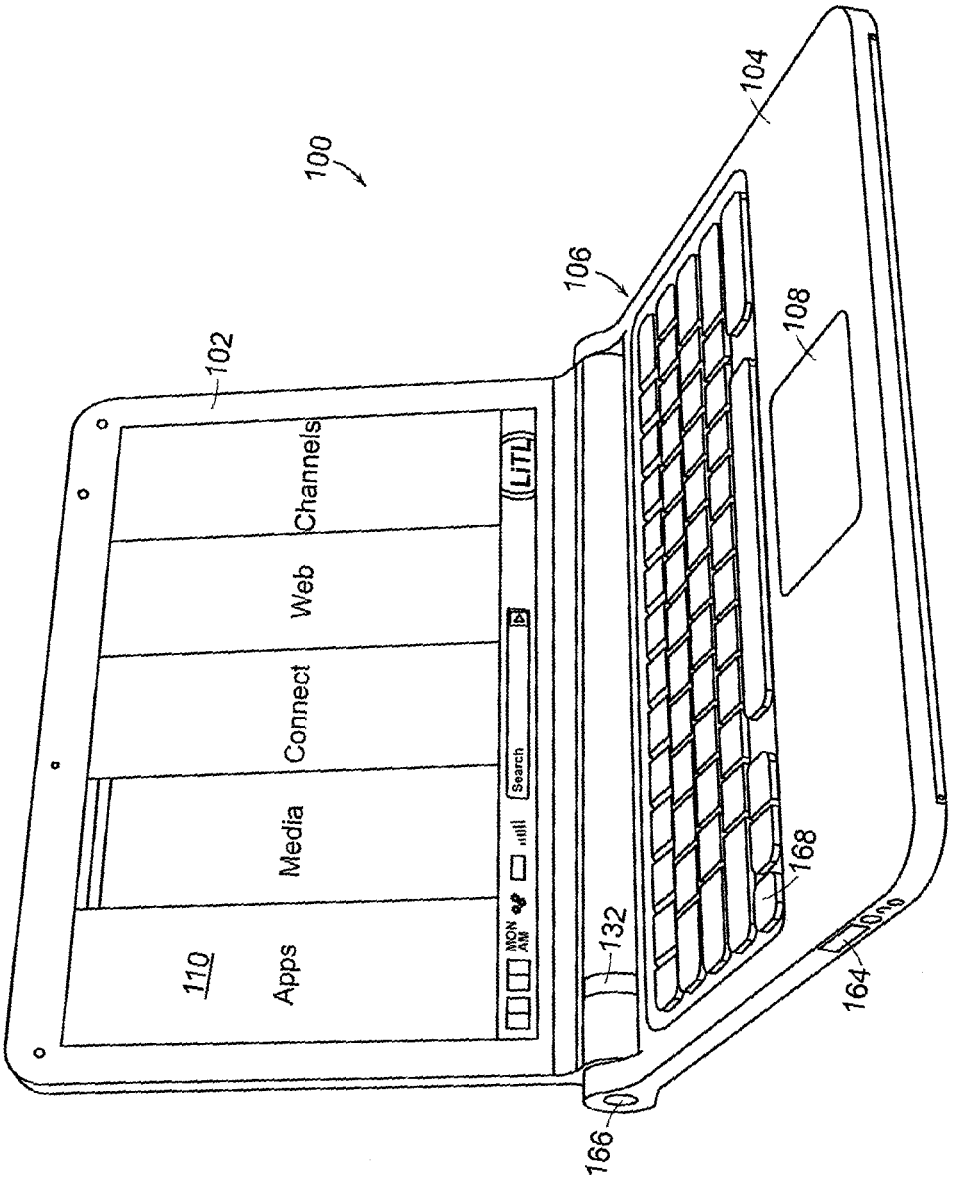
100
102
104
106
108
110
Apps
Media
Connect
Web
Channels
Search
LITL
MON
AM
132
164
166
168

FIG. 17

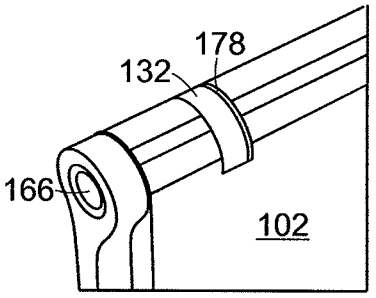

FIG. 18

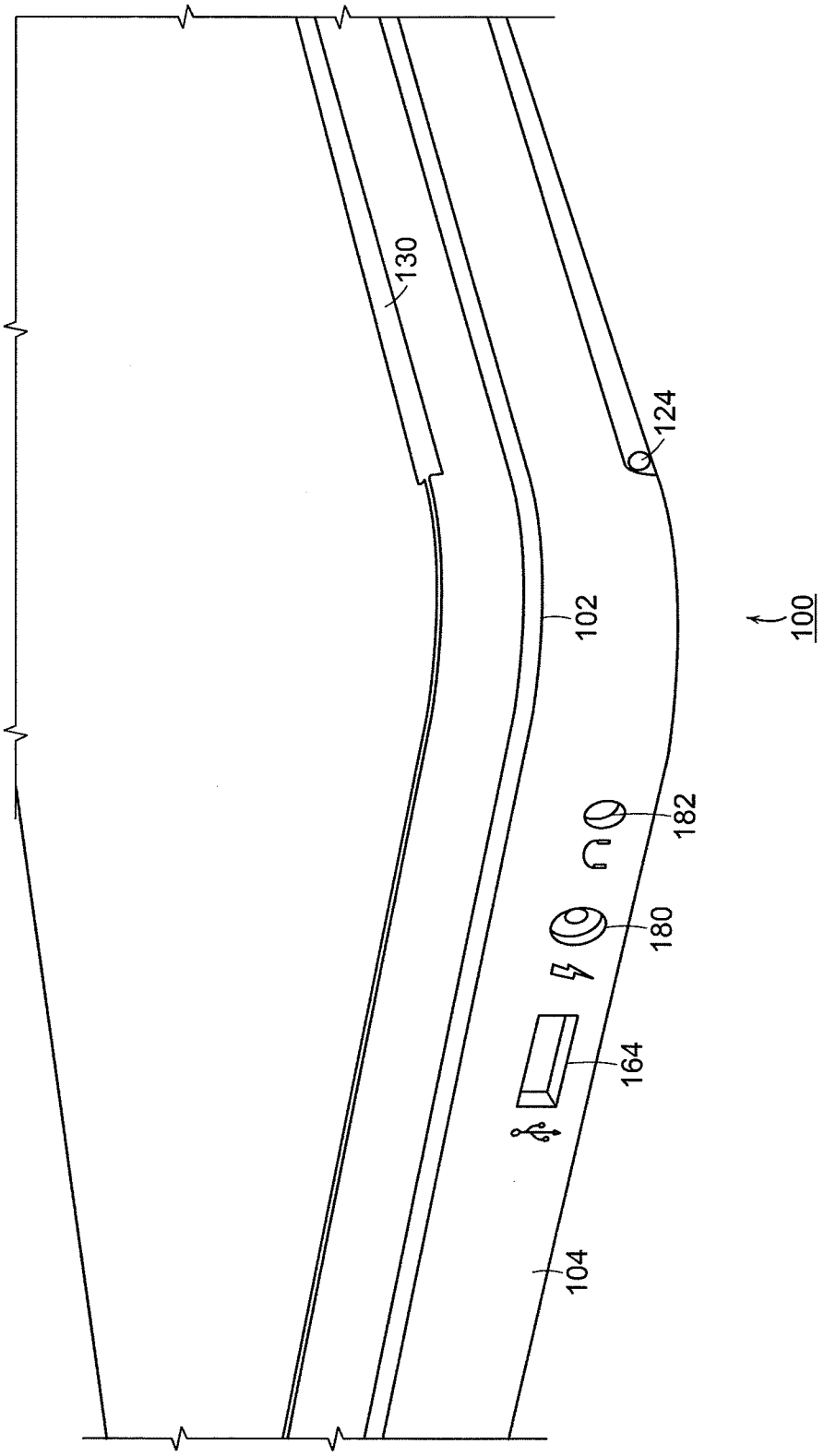

FIG. 19

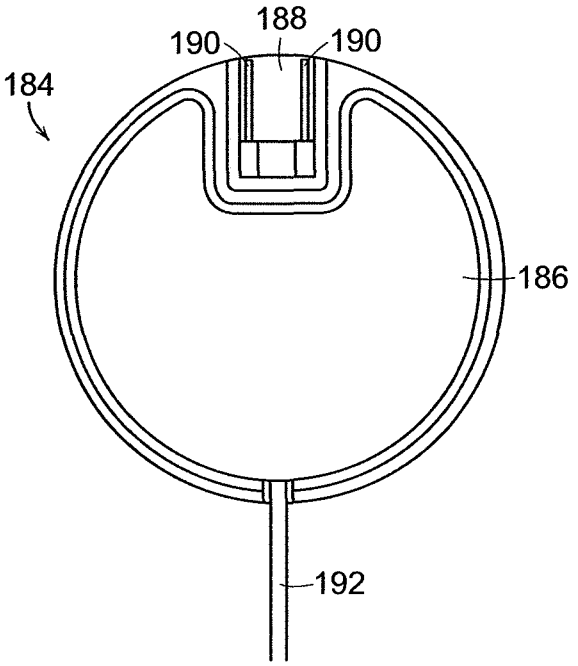

FIG. 20

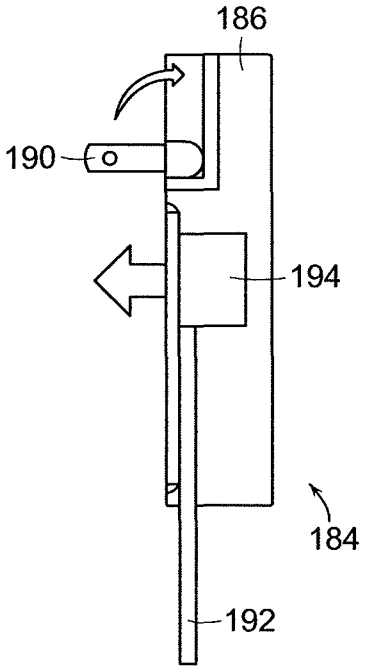

FIG. 21

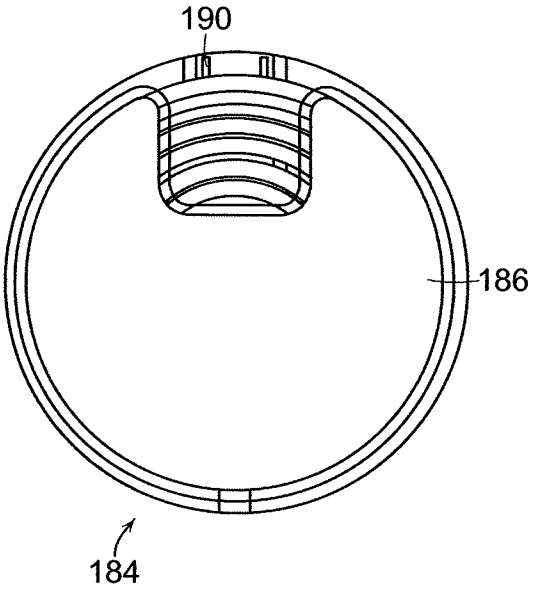

FIG. 22A

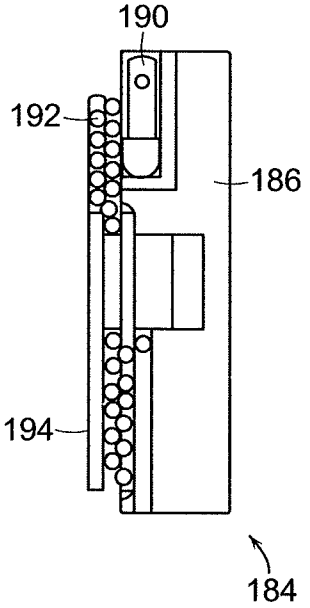

FIG. 22B

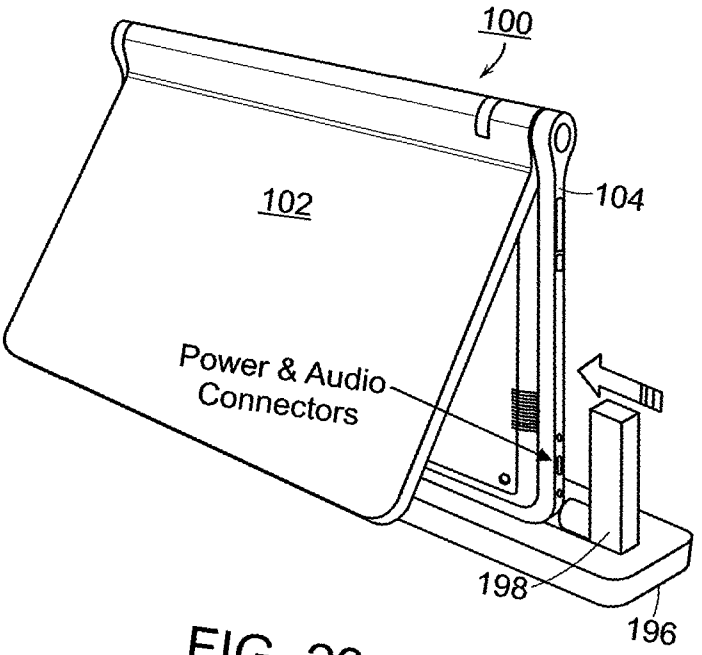

FIG. 23

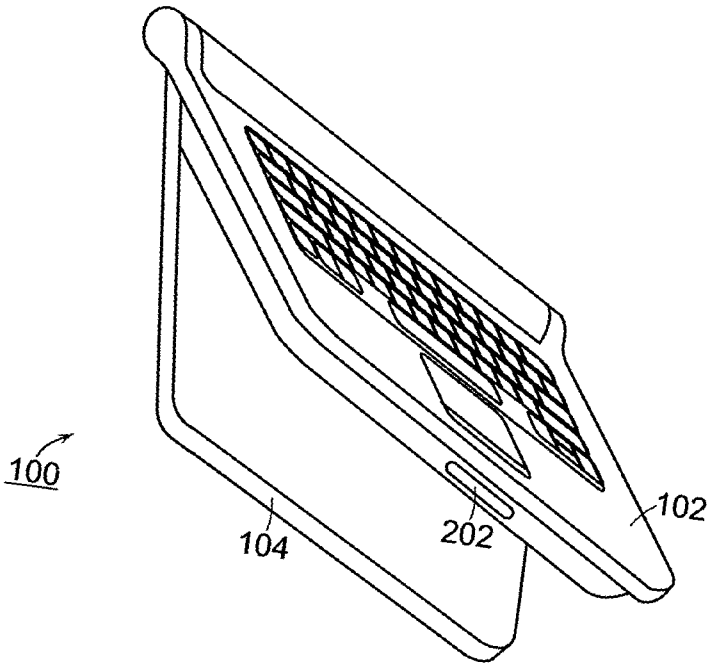

FIG. 24

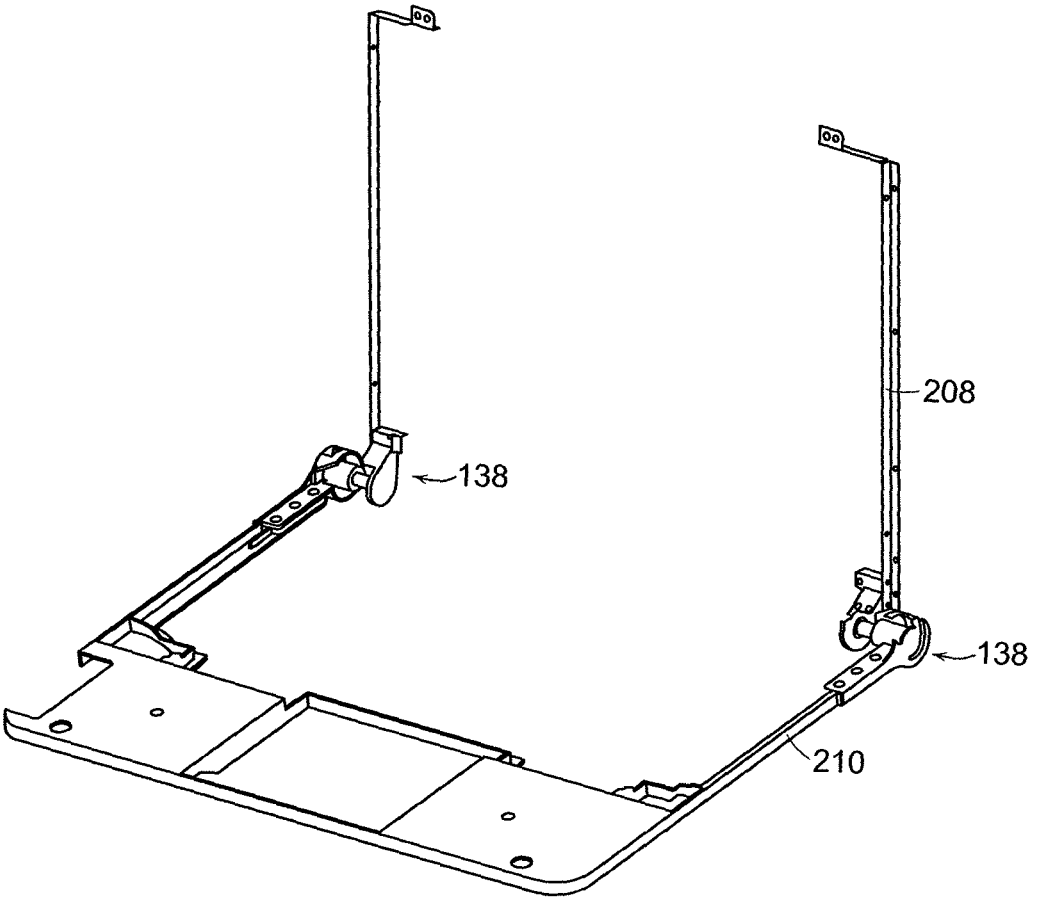

FIG. 25

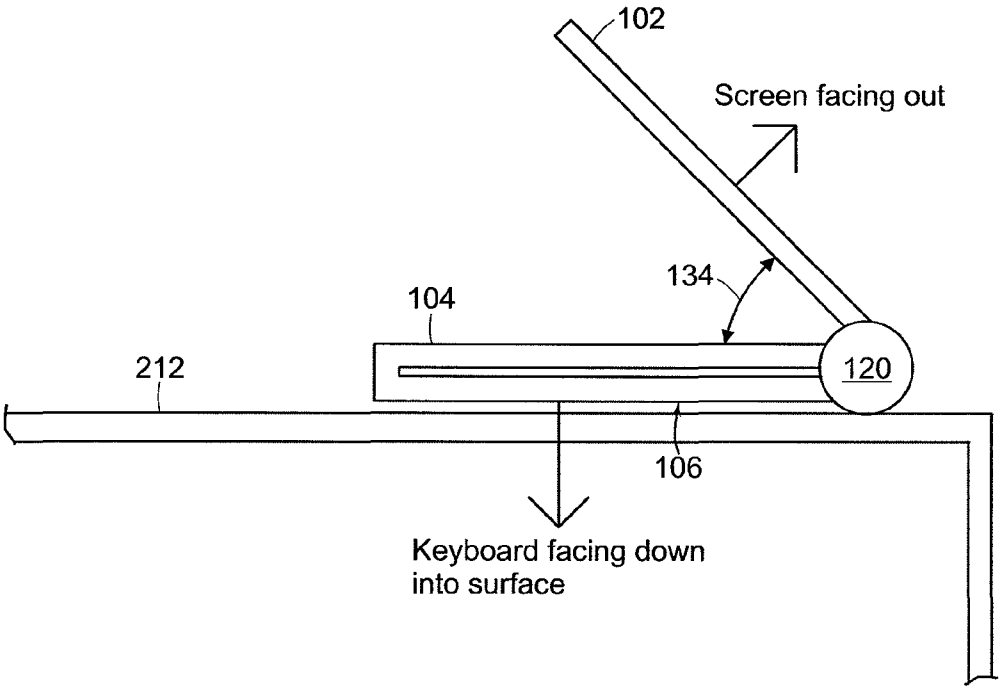
102
Screen facing out
134
104
212
120
106
Keyboard facing down
into surface

FIG. 26

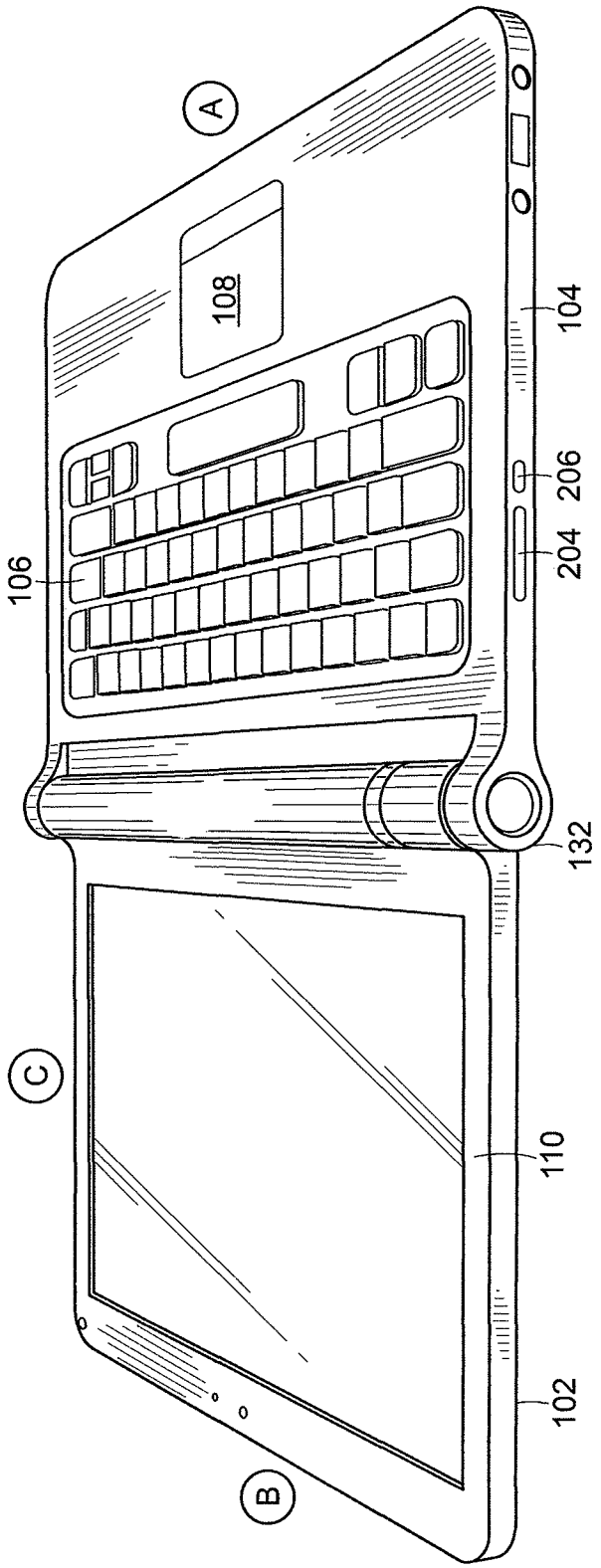

FIG. 27

PORTABLE COMPUTER WITH MULTIPLE DISPLAY CONFIGURATIONS

RELATED APPLICATIONS

This application claims priority under 35 U.S.C. §119(e) to U.S. Provisional Patent Application No. 61/041,365 filed Apr. 1, 2008, entitled "PORTABLE COMPUTER WITH MULTIPLE DISPLAY CONFIGURATIONS," which is incorporated herein by reference in its entirety.

BACKGROUND

1. Field of Invention

The present invention relates generally to portable computers and, more particularly, to a portable computer that is configurable into different functional and positional modes.

2. Discussion of Related Art

Portable computers, such as laptop computers or notebook computers, have become increasingly popular and ubiquitous in the home and workplace. Conventional portable computers most commonly have a "clam-shell" configuration, with a base including the keyboard, various ports, connectors and/or inputs (e.g., for power and connecting peripheral devices), and the majority of the electrical components (e.g., the central processing unit and memory), and a display component pivotably coupled to the base by a hinge. The display component is movable about the hinge between a closed position, with the display screen positioned adjacent the keyboard, and an open position, with the display screen inclined at a desired viewing angle.

Some portable computers are able to accept user inputs via a touch screen in addition to via conventional tools, such as a keyboard or mouse. The use of a touch screen to input data is sometimes referred to as operating in "tablet mode" because the computer is being used in a manner similar to a tablet of paper. U.S. Pat. No. 6,771,494 discloses a hybrid tablet-type portable computer that is capable of operating either as a normal laptop computer receiving user input via a keyboard ("laptop mode"), or as a tablet computer receiving user input via a touch screen. The '494 patent further discloses that the display component of the computer is attached to the base of the computer by hinges that allow the display to be tilted relative to the base (for laptop mode), and to be rotated and folded against the base to configure the computer into tablet mode.

Another variation of a portable computer with a moveable display is disclosed in U.S. Pat. No. 6,266,236. The '236 patent discloses a computer including a base, a display member and an arm assembly coupling the display member to the base. According to the '236 patent, the arm assembly allows pivotable movement of the display member between a plurality of positions, including a notebook mode configuration, a tablet mode configuration, a presentation mode configuration, and a closed mode.

SUMMARY OF INVENTION

Aspects and embodiments of the present invention are directed to a portable computer that is configurable between a laptop mode (in which the portable computer has a conventional laptop appearance) and an easel mode in which the base of the computer and its display component stand upright forming an inverted "V," as discussed further below. The display component is pivotably coupled to the base of the portable computer by a hinge that allows the display component to be rotated or tilted about a longitudinal axis running

along an interface between the base and the display component. Unlike the computers discussed in U.S. Pat. Nos. 6,266,236 and 6,771,494 above, the portable computer according to embodiments of the invention does not require an arm assembly, nor multiple, different hinge assemblies to be configured into the different modes. Furthermore, the portable computer according to embodiments of the invention is capable of different display modes and different functionality in the different configurations, as discussed below.

Further aspects and embodiments are directed to a portable computer having an embedded scroll wheel that can be configured to allow a user to control various features and functionality of the portable computer. For example, as discussed further below the scroll wheel can be used to navigate among information displayed on the portable computer's display and/or to alter operating modes of the portable computer, and/or to control features such as volume, display brightness, etc.

According to one embodiment, a portable computer is configurable between various modes, including a closed mode, a laptop mode, an easel mode, a flat mode and a frame mode. The portable computer may comprise a display component including a display screen, a base, and a hinge assembly at least partially housed within the base and configured to pivotably couple the display component to the base. The display component may be rotatable about a longitudinal axis running along an interface between the display component and the base. In the closed mode, the display screen may be disposed substantially against the base, and rotating the display component about the longitudinal axis up to approximately 180 degrees from the closed mode may configure the portable computer into the laptop mode. Rotating the display component about the longitudinal axis beyond approximately 180 degrees axis from the closed mode may configure the portable computer into the easel mode.

In one example of the portable computer, the display component is rotatable about the longitudinal axis up to approximately 320 degrees from the closed mode. In another example, the portable computer comprises a display orientation module that displays content on the display screen in one of a plurality of orientations relative to the longitudinal axis. The orientation of the displayed content may be dependent on the current display mode of the portable computer, or may be configurable responsive to a user input. The portable computer may further comprise a mode sensor which detects a current display mode of the portable computer, and the display orientation module may display content on the display screen in an orientation dependent on the current display mode detected by the mode sensor. Depending on the hinge assembly used, the longitudinal axis may comprises multiple parallel axes, and the hinge assembly may be configured to permit rotation of the display component about any of the multiple parallel axes to configure the portable computer between the plurality of display modes.

Another embodiment is directed to a portable computer comprising a base, a display component rotatably coupled to the base, and means for rotating the display component in a single direction relative to the base to configure the portable computer between a laptop mode and an easel mode.

In another embodiment of a portable computer configurable between multiple modes including a laptop mode and an easel mode, the portable computer comprises a display component, a base, and a hinge assembly configured to rotatably couple the display component to the base. The hinge assembly may be configured to permit rotation of the display component about a single axis to configure the portable computer between the laptop mode and the easel mode. In one

example, the single axis is a longitudinal axis running along an interface between the display component and the base. The portable computer may further comprise a scroll wheel disposed at least partially about the longitudinal axis. In one example, the display component comprises a display screen, and the scroll wheel is configured to permit a user to manipulate content displayed on the display screen.

Another embodiment is directed to a method of automatically orienting content displayed on a portable computer. The method comprises rotating a display component of the portable computer about a longitudinal axis running along an interface between the display component and a base of the portable computer, detecting a degree of rotation of the display component relative to the base, providing a signal representative of the degree of rotation of the display component, and automatically configuring an orientation, relative to the longitudinal axis, of the content displayed on the portable computer responsive to the signal.

According to another embodiment, a portable computer comprises a base unit, a display unit including a display screen configured to display content, an orientation sensor which detects an orientation of the display unit relative to the base unit, and a display orientation module which orients the content displayed on the display screen responsive to the orientation detected by the orientation sensor.

Another embodiment of a portable computer comprises a base, a display component rotatably coupled to the base such that the display component and the base are rotatable with respect to one another about a longitudinal axis running along an interface between the display component and the base, the display component including a display screen, and a scroll wheel disposed at least partially within the base and rotatable about the longitudinal axis, the scroll wheel configured to permit a user to control at least one of operating parameters of the portable computer and content displayed on the display screen. In one example, the scroll wheel is configured to permit the user to adjust a volume of sound produced by the portable computer. In another example, the screen is configured to display at least one of a plurality of modes of content, and the scroll wheel is configured to permit the user to select a mode of content for display by the portable computer. The portable computer may further comprise one or more navigation buttons that may be used in conjunction with the scroll wheel to control aspects of the portable computer and displayed content.

According to another embodiment, a portable computer is configurable between a plurality of display modes including a laptop mode and an easel mode, the portable computer comprising a base, a display component rotatably coupled to the base and including a screen which displays content, and a scroll wheel accessible in each of the plurality of display modes and configured to permit a user to manipulate at least one of operating parameters of the portable computer and the content displayed on the screen. In one example, the scroll wheel is disposed at leas partially about an axis of rotation of the display component relative to the base.

In another embodiment, a portable computer comprises a base, a display component including a screen configured to display content, a hinge assembly configured to rotatably couple the display component to the base and to permit rotation of the display component about a longitudinal axis running along an interface between the display component and the base, and a scroll wheel disposed at least partially about the longitudinal axis.

Still other aspects, embodiments, and advantages of these exemplary aspects and embodiments, are discussed in detail below. Moreover, it is to be understood that both the foregoing information and the following detailed description are merely illustrative examples of various aspects and embodiments, and are intended to provide an overview or framework for understanding the nature and character of the claimed aspects and embodiments. Any embodiment disclosed herein may be combined with any other embodiment in any manner consistent with the objects, aims, and needs disclosed herein, and references to "an embodiment," "some embodiments," "an alternate embodiment," "various embodiments," "one embodiment" or the like are not necessarily mutually exclusive and are intended to indicate that a particular feature, structure, or characteristic described in connection with the embodiment may be included in at least one embodiment. The appearances of such terms herein are not necessarily all referring to the same embodiment. The accompanying drawings are included to provide illustration and a further understanding of the various aspects and embodiments, and are incorporated in and constitute a part of this specification. The drawings, together with the remainder of the specification, serve to explain principles and operations of the described and claimed aspects and embodiments.

BRIEF DESCRIPTION OF THE DRAWINGS

Various aspects of at least one embodiment are discussed below with reference to the accompanying figures, which are not intended to be drawn to scale. Where technical features in the figures, detailed description or any claim are followed by references signs, the reference signs have been included for the sole purpose of increasing the intelligibility of the figures, detailed description, and claims. Accordingly, neither the reference signs nor their absence are intended to have any limiting effect on the scope of any claim elements. In the figures, each identical or nearly identical component that is illustrated in various figures is represented by a like numeral. For purposes of clarity, not every component may be labeled in every figure. The figures are provided for the purposes of illustration and explanation and are not intended as a definition of the limits of the invention. In the figures:

FIG. **1** is an illustration of one example of a portable computer, according to aspects of the invention, in a "laptop" configuration;

FIG. **2** is a view of the portable computer of FIG. **1** in the closed position;

FIG. **3** is a plan view of the exterior of the bottom of the portable computer of FIG. **1**;

FIG. **4** is a perspective view of the portable computer of FIG. **1** in the easel mode;

FIG. **5** is a side view of the portable computer of FIG. **4**, illustrating the adjustable angle of the easel mode;

FIGS. **6**A-C are diagrams illustrating different positions of the portable computer of FIG. **4** in easel mode;

FIG. **7**A is an illustration of a portion of the portable computer of FIG. **1** in the laptop mode, illustrating a hinge assembly according to aspects of the invention;

FIG. **7**B is an in illustration of a portion of the portable computer of FIG. **1** in the easel mode, illustrating the hinge assembly according to aspects of the invention;

FIG. **8** is a diagram of one example of the hinge assembly of FIGS. **7**A and **7**B;

FIG. **9** is a cross-sectional diagram of a portion of the hinge assembly of FIG. **8**, taken along line **9-9** in FIG. **8**;

FIG. **10** is an exploded view of the hinge assembly of FIG. **8**;

FIG. **11** is a block diagram of one example of a portable computer user interface architecture, according to aspects of the invention;

FIG. **12** is a screen shot illustrating one example of a graphical user interface, according to aspects of the invention;

FIG. **13** is a screen shot illustrating another example of a graphical user interface according to aspects of the invention;

FIG. **14** is an illustration of a user adjusting the scroll wheel on a portable computer in the easel mode, according to aspects of the invention;

FIG. **15** is an illustration of a user pressing the scroll wheel on a portable computer, according to aspects of the invention;

FIG. **16** is an illustration of a user pressing a navigation button on the portable computer, according to aspects of the invention;

FIG. **17** is an illustration of an example of the portable computer in the laptop mode, according to aspects of the invention;

FIG. **18** is a view of a portion of the portable computer illustrating a wireless signal indicator feature, according to aspects of the invention;

FIG. **19** is a view of a portion of the portable computer in the closed position, according to aspects of the invention;

FIG. **20** is a plan view of one example of a power adaptor, according to aspects of the invention;

FIG. **21** is a side view of the power adaptor of FIG. **20**;

FIG. **22**A is another side view of the power adaptor of FIG. **20**, illustrating the power cord would around a cord spool, according to aspects of the invention;

FIG. **22**B is a plan view of the power adaptor of FIG. **22**A

FIG. **23** is an illustration of the portable computer coupled to a docking station, according to aspects of the invention;

FIG. **24** is an illustration of the portable computer showing one example of a docking connector, according to aspects of the invention;

FIG. **24** is an illustration of a hinge assembly coupled to a computer frame, according to aspects of the invention;

FIG. **26** is an illustration of the portable computer configured into a "frame" mode, according to aspects of the invention; and

FIG. **27** is an illustration of the portable computer configured into a "flat" mode, according to aspects of the invention.

DETAILED DESCRIPTION

Aspects and embodiments are directed to a portable computer that is configurable between different operating modes, including a laptop mode (in which the portable computer has a conventional laptop appearance), a flat mode, a frame mode, and an easel mode in which the base of the computer and its display component stand vertically forming an inverted "V," as discussed further below. The portable computer is capable of different display formats and functionality in the different modes, and includes a graphical user interface that may work seamlessly with the computer hardware to provide a unified, comfortable, holistic user experience. In particular, the portable computer may provide access to a wide array of functions, both those traditionally provided by computing devices and those traditionally provided by other passive information devices. For example, the hardware and software, including the graphical user interface, of the portable computer may be focused toward providing access to entertainment media, such as audio and video (e.g., playing music, streaming video, viewing photographs, etc.), email, and internet, while also providing state-of-the-art computer processing capability.

It is to be appreciated that embodiments of the methods and apparatuses discussed herein are not limited in application to the details of construction and the arrangement of components set forth in the following description or illustrated in the accompanying drawings. The methods and apparatuses are capable of implementation in other embodiments and of being practiced or of being carried out in various ways. Examples of specific implementations are provided herein for illustrative purposes only and are not intended to be limiting. In particular, acts, elements and features discussed in connection with any one or more embodiments are not intended to be excluded from a similar role in any other embodiments. Also, the phraseology and terminology used herein is for the purpose of description and should not be regarded as limiting. Any references to embodiments or elements or acts of the systems and methods herein referred to in the singular may also embrace embodiments including a plurality of these elements, and any references in plural to any embodiment or element or act herein may also embrace embodiments including only a single element. References in the singular or plural form are not intended to limit the presently disclosed systems or methods, their components, acts, or elements. The use herein of "including," "comprising," "having," "containing," "involving," and variations thereof is meant to encompass the items listed thereafter and equivalents thereof as well as additional items. References to "or" may be construed as inclusive so that any terms described using "or" may indicate any of a single, more than one, and all of the described terms.

Referring to FIG. **1**, there is illustrated one example of a portable computer according to aspects of the invention. In FIG. **1**, the portable computer **100** is illustrated in the "laptop" mode, with the display component **102** inclined at a viewing angle from the base **104**. The display component **102** is pivotably coupled to the base **104** by a hinge assembly (not shown) that allows the display component to be rotated with respect to the base. The hinge assembly may include a single or multiple hinges, which may be any of a variety of hinge types, including, but not limited, to single-axis hinges, multiple-axis hinges, geared hinges, etc. In one example, the hinge assembly allows the display component **102** to be rotated (or tilted) about a longitudinal axis **101** running along an interface between the display component and the base **104**, as illustrated in FIG. **1** and discussed further below. The base **104** includes a keyboard **106** and internal electronic components (not shown), such as a central processing unit, memory, and other components necessary to operate the portable computer, as known to those skilled in the art. In some embodiments, the base **104** may also include a touch pad **108** or trackball (not shown) for receiving user commands, as known to those skilled in the art.

Still referring to FIG. **1**, the display component **102** includes a display screen **110**, and may also include a camera **112**, microphone **114**, and infrared receiver **116**, as discussed further below. It is to be appreciated that the locations of the camera **112**, microphone **114** and infrared receiver **114** are not limited to the example illustrated in FIG. **1**, and may be placed in other locations on the display component **102** and/or base **104**, as would be recognized by those skilled in the art. The display component **102** may also include cushions **118** that provide soft contact points between the base **104** and the display component **102** when the portable computer is closed. In one example, the cushions **118** are made of rubber. However, it is to be appreciated that the invention is not so limited, and the cushions **118** may comprise materials other than rubber, including, for example, a polymer, felt, or other suitable materials as would be recognized by those skilled in the art.

Referring to FIG. **2**, there is illustrated a side view of the portable computer **100** of FIG. **1** in the closed configuration. As is the case for conventional clam-shell type portable computers, when the portable computer **100** is closed, the display screen is disposed "face down" against the keyboard of the

base **104**. In the illustrated embodiment, the base **104** includes a rounded portion **120** that houses the hinge (not shown) that pivotably couples the display component **102** to the base, as discussed further below. It is to be appreciated that the rounded portion **120** is not limited to having a round shape, but may instead have another shape, which may be dependent on the type of hinge used. In one embodiment, a power button **122**, configured to turn the portable computer ON and OFF, may also be provided on the rounded portion **120**, as illustrated in FIG. **2**. However, it is to be appreciated that the invention is not so limited, and the power button **122** may be located elsewhere on the base **104**. In one example, the power button **122** may be slightly recessed relative to the surface of the base **104**, so as decrease the potential for the power button to be accidentally pressed.

An exterior view of the bottom of the base **104** (the underside of the portable computer **100**) is illustrated in FIG. **3**. As can be seen in FIG. **3**, in one embodiment, the base **104** includes a plurality of feet **124**. In one example, the feet **124** are made of rubber; however, it is to be appreciated that the invention is not so limited and the feet may be made of another material, such as, for example, a polymer or felt. A ventilation slit **126** may be provided near an interface between the base **104** and the display component **102**, as illustrated, or elsewhere as may be desired, to allow heat to dissipate from the internal electronic components in the base. The base **104** may also include one or more speakers **128**. In one example, the base **104** includes two stereo speakers **128**, positioned at either side of the base, as illustrated in FIG. **3**; however, it is to be appreciated that the portable computer **100** may comprise more or fewer speakers which may be placed at any location on the base **104**. A scroll wheel **132** may be provided to allow a user to control certain functionality of the portable computer **100**, such as navigating web pages, controlling speaker volume, selecting programs, etc., as discussed further below.

According to one embodiment, the base **104** may comprise a cushioning strip **130** disposed along an edge of the base **104** opposite to the interface between the display component **102** and the base, as illustrated in FIG. **3**. The cushioning strip **130**, which may comprise rubber, a polymer, or another suitable material, may serve as a "foot" when the portable computer is configured into the easel mode, as discussed further below. In one embodiment, the display component **102** may be provided with a similar cushioning strip that may serve as a second supporting foot when the portable computer is configured into the easel mode.

Referring to FIG. **4**, there is illustrated an example of the portable computer **100** configured into the easel mode. To convert the portable computer **100** from the laptop mode (or closed position) into the easel mode, the display component **102** may be folded away from the base **104**, in the same direction as to open the computer (i.e., to configure the computer from the closed position into the laptop mode) such that the base **104** and the display component **102** form an inverted "V" shape with the bottom of the base and the back of the display component face another, as illustrated in FIG. **4**. In the easel mode, the display screen **110** is visible and accessible on one side of the portable computer **100** and the keyboard **106** (not shown in FIG. **4**) is visible and accessible on the other side.

As illustrated in FIG. **4**, in one embodiment, the portable computer may comprise integrated hardware volume controls, including a volume control button **204** and a mute button **206**. In one example, the volume control button **204** may be a rocker switch that allows a user to easily increase or decrease the volume of audio played through the speakers **128**. When the user presses the volume control button **204**, a volume indicator may temporarily appear on the display screen **110**, to provide a visual indication of the amount by which the volume is being increased or decreased. Similarly, pressing the mute button **206** may cause a visual indication that the volume is muted to appear on the display screen **110**.

According to one embodiment, when the portable computer **100** is configured into the easel mode, the visual display on the display screen **110** is automatically rotated 180 degrees such that the information appears "right-way-up," even through the display screen is upside-down compared to when the portable computer is in the laptop mode. Thus, a user may simply "flip" the portable computer **100** into the easel mode and immediately be able to comfortably view information on the display screen **110**, without having to access display screen controls to adjust the orientation of the visual display. In one embodiment, the portable computer **100** includes an orientation (or mode) sensor that is configured to detect whether the portable computer is in the laptop mode or the easel mode, and to adjust the display accordingly. The orientation sensor may be incorporated into the base component **104**, for example, underneath the keyboard **106**, or into the display component. In one example, locating the orientation sensor in the display component **102**, rather than the base **104**, may provide more robust detection and therefore, may be presently preferred in some embodiments. The orientation sensor may be used to determine a precise relative orientation of the base component **104** with respect to the display component **102**, or vice versa, for example, to determine whether the device is in the laptop mode, easel mode, or some point in between the two modes. In one example, the orientation sensor includes an accelerometer whose output is fed to the computer operating system (or to dedicated logic circuitry) which then triggers a display inversion as appropriate.

Accelerometers have been used in portable devices such as cellular phones, media players or computers, as sudden motion sensors, or "drop detectors," to protect against hard drive crashes in the event that the device is dropped. By contrast, however, the accelerometer in the portable computer according to an embodiment of the invention is not used to detect motion of the overall computer, but rather to detect a configuration of the portable computer **100** (e.g., laptop mode or easel mode), particularly, to detect an orientation of the display component **102** relative to the base component **104**. In one example, information from the accelerometer is provided to a display controller in the portable computer and used to switch the display between portrait or landscape mode, as is done in some conventional devices.

Referring to FIG. **5**, when the portable computer **100** is in the easel mode, the base **104** is disposed at an angle **134** to the display component **102**. This angle **134** is adjustable, for example, to allow a comfortable viewing angle to the display screen **110** to be maintained for different positions of a user **136** and of the portable computer **100**, as illustrated in FIGS. **6**A, **6**B and **6**C. For example, when the user **136** is further from the portable computer, the angle **134**a (FIG. **6**A) may be made smaller than the angle **134**b when the user is closer to the portable computer (FIG. **6**B). As discussed above, in one example, the orientation sensor (not shown) may be used to detect, either approximately or precisely, the angle **134** and to provide the information to the computer operating system.

According to one embodiment, the display component **102** is pivotably coupled to the base **104** by a hinge that allows the display component to be moved relative to the base so as to allow the portable computer **100** to be configured into the closed position, the laptop mode or the easel mode. As discussed above, in conventional "clamshell" type portable com-

puters, the hinges that couple the display component to the base generally do not permit more than about 180 degrees of rotation of the display component. Thus, these conventional portable computers can be in a closed position or open, laptop configuration, but cannot be configured into an easel mode because the conventional hinges do not permit sufficient movement of the display component. Similarly, the tablet-type portable computers discussed above have displays that can be opened, rotated and folded such that they lie flat against the keyboard on the base, but cannot be configured into an easel mode. Although, as discussed above, U.S. Pat. No. 6,266,236 discloses a computer that is configurable into a presentation mode, this requires a complex arm assembly. By contrast, the portable computer according to embodiments of the present invention may be configured into the easel mode by simply continuing to tilt or rotate the display component past the "laptop positions" until a desired easel angle **134** is reached.

Referring to FIGS. **7**A and **7**B, there is illustrated a portion of the portable computer **100** illustrating a hinge assembly **138** that allows the portable computer to be configured into either the laptop mode (FIG. **7**A) or the easel mode (FIG. **7**B), according to aspects of the invention. According to one embodiment, the hinge assembly **138** accommodates 0-320 degrees of rotation, allowing a minimum angle **134** (see FIG. **5**) of 40 degrees. However, it is to be appreciated that the hinge assembly **138** may allow greater or fewer degrees of rotation, provided only that sufficient rotation is allowed so as to configure the portable computer **100** into either the laptop mode or the easel mode. As discussed above, in one embodiment the portable computer **100** includes an orientation sensor (not shown) that is configured to detect a relative orientation of the display component **102** and the base component **104**. In one example, the orientation sensor may be an accelerometer incorporated into the base component **104**, as discussed above. Alternatively, the orientation sensor may be incorporated into the hinge assembly **138** and may be used to detect movement of the hinge assembly, and to translate that movement into an information about the relative orientation of the display component **102** and the base component **104** (for example, a size of the angle **134**). It is also to be appreciated that the orientation sensor may include electronic or mechanical components, or a combination thereof. For example, the hinge assembly may be provide with detents that provide an indication of the mode of the portable computer.

As discussed above, and also illustrated in FIGS. **7**A and **7**B, the portable computer may also comprise a scroll wheel **132** that allows a user to adjust, control and/or select various aspects of the portable computer (e.g., wireless capability or speaker volume) or items displayed on the display screen **110**. A housing **160** may contain or support various mechanical and/or electronic components (not shown) that are coupled to the scroll wheel **132** and are configured to convert physical movement of the scroll wheel into electrical signals. These electrical signals may be provided to the central processing unit of the portable computer **100** which processes the electrical signals so as to translate movement of the scroll wheel into control of a selected feature, for example, adjusting the volume of the speaker(s) or selecting a particular item displayed on the display screen, as discussed further below.

One embodiment of the hinge assembly **138** is illustrated in FIG. **8**. The hinge assembly includes a bracket **140** rotatably coupled to a housing **142**. The housing **142** may include a first flange **144** that may be fastened to an internal frame in the base **104**, as illustrated in FIG. **7**A. The first flange **144** may include holes **146** to allow the first flange to be fastened to the base **104** using fasteners, such as, for example, screws, rivets or bolts. The bracket **140** may include a second flange **148** that may be similarly coupled to the display component **102** using fasteners **150**. In one embodiment, the display screen **110** (see FIG. **1**) may be an LCD screen. As known to those skilled in the art, an LCD screen generally comprises a frame and plastic housing. In one example, the second flange **148** may be fastened to either or both of the display screen frame and the screen's plastic housing. Referring to FIG. **25**, there is illustrated an example of two hinge assemblies **138** coupled to the display frame **208** of the display component, and to the base frame **210** of the base component **104**. According to one embodiment, the bracket **140** and/or housing **142** may be formed of cast zinc. However, it is to be appreciated that other materials, including other metals, may be used, and the bracket **140** and/or housing **142** may be formed using a procedure other than casting, such as, for example, machining or molding.

Referring again to FIG. **8**, in one embodiment, the hinge assembly **138** may also incorporate an area **152** for locating the power button (FIG. **2**, **122**) or a navigation control button (FIG. **4**, **166**), as discussed further below.

Referring to FIG. **9**, there is illustrated a cross-sectional view of a portion of the hinge assembly **138** taken along line A-A in FIG. **8**. As shown in FIG. **9**, in one embodiment the hinge assembly **138** comprises a shaft **154** located within the hinge housing **142**. The shaft **154** may be held in position within the hinge housing **142**, and rotatably coupled to the housing, by torsion elements, such as springs **156**. In one example, the springs **156** may be formed by stamping; however, it is to be appreciated that other methods of manufacture may be used. In one example, the hinge assembly may accommodate about 320 degrees of rotation, as discussed above, and may provide about 6.5 in-lbs in symmetric torque.

FIG. **10** is an exploded view of the hinge assembly of FIGS. **8** and **9**. As shown in FIG. **10**, the shaft **154** is coupled to a member **158**. This member **158** may be integral with or coupled to the bracket **140** which is, in turn, fastened to the display component, as discussed above. Thus, the shaft **154** and springs **156** provide a rotatable coupling between the fixed elements of the hinge assembly, namely, the hinge housing **142** and bracket **140** which are fastened to the base **104** and display component **102** of the portable computer. In this manner, the hinge assembly allows the display component **102** to be moved relative to the base **104**, thereby allowing the portable computer to be easily and quickly configured into any of the closed position, laptop mode or easel mode. For example, simply rotating or tilting the display component about the longitudinal axis **101** (see FIG. **1**) up to approximately 180 degrees from the closed mode configures the portable computer into the laptop mode, and rotating the display component about the longitudinal axis **101** beyond approximately 180 degrees axis from the closed mode configures the portable computer into the easel mode.

According to one embodiment, the portable computer may include integrated "navigation" hardware that allows a user to easily and comfortable control various features and functions of the portable computer, and to manipulate content displayed on the portable computer. For example, as discussed above, the portable computer **100** may comprise a scroll wheel **132** that allows a user to control, adjust and/or select various functionality of the portable computer. According to another embodiment, the scroll wheel **132** may be used to provide "hardware navigation" through information, such as menus, icons, etc., displayed on the display screen **110**, as discussed further below with reference to FIG. **17**. A common display configuration used in conventional computers is a "desktop" view in which multiple icons representing links to various

programs or applications are displayed over a background image. Navigation is conventionally performed using a mouse, touch pad or trackball, as known to those skilled in the art. In one embodiment, the portable computer **100** may display information on the display screen **110** in the conventional desktop configuration, and navigation may be performed using either conventional tools, such as a touchpad **108**, trackball (not shown) or peripheral, for example, a mouse, that is connected to the portable computer **100** via a port **164**, or the scroll wheel **132**, or a combination thereof. According to another embodiment, the portable computer **100** includes a streamlined graphical user interface that supports "map" navigation. The map user interface provides a clear overview of the entire computing environment and searching capability within the environment that may be accessed using the scroll wheel **132** and, optionally, one or navigation buttons **166**, **168** that may be provided on the base **104** of the portable computer **100** (button **166**) and/or in the keyboard **106** (button **168**), illustrated in FIG. **17**. In one embodiment, the map mode of navigation is a hierarchical mode that reduces the number of items to select amongst at any stage of navigation, thereby facilitating user access with the scroll wheel **132** and, optionally, the navigation button(s) **166**, **168**. Of course, it is to be appreciated that the map user interface may also be navigated using conventional tools, such as a trackball, touchpad, mouse or arrow keys.

Referring to FIG. **11**, there is illustrated a block diagram of one example of an architecture of the portable computer including a map user interface. The user interface "home" screen **170** that displays a plurality of modes of content **172**. In the illustrated example, the home screen **170** contains five modes of content **172**; however, it is to be appreciated that the home screen may include more or fewer than five modes of content and that the modes of content may differ from the examples discussed below. According to one example, the modes of content **172** accessible via the home screen **170** may include "media" **172***a*, "connect" **172***b*, "web" **172***c*, "applications" **172***d*, and "channels" **172***e*. Using the map user interface, information, programs, features and applications may be grouped into the various modes of content **172**. By selecting any mode of content **172**, for example, by using the scroll wheel **132** and/or navigation buttons **166**, **168**, as discussed further below, the user may access the content organized within that mode. For example, the media mode **172***a* may provide access to a medial player to play, view, search and organize media such as music, video, photos, etc. The connect mode **172***b* may provide access to features such as, for example, email, voice-over-IP, instant messaging, etc., and the web mode **172***c* may provide access to internet browsing and searching. The application mode **172***d* may provide access to, for example, computer applications or programs, such as word processor, spreadsheet, calculator, etc. In one example, these applications or programs may be provided as web-based services rather than programs or applications residing on the portable computer **100**. The channels mode **172***e* may provide access to different functionality of the portable computer, with the different functions or features defined as different channels. For example, a channel may include an alarm clock channel in which the portable computer is configured to display a clock and can be programmed to activate an alarm, e.g., a sound, piece of music, etc., at a predetermined time. Another example of a channel may include a "photo frame" channel in which the portable computer may be configured to display a pre-selected image or set of images, etc. Another example of a channel is a "television" channel, in which the portable computer is configured to stream Internet television. In one example, a user may configure particular Internet television channels (e.g., a news channel, a movie channel, a home and garden channel, etc.) into sub-channels within the channels mode of content **172**(*e*). Some or all of the modes of content **172** may access, retrieve and/or store information on the Internet **174**.

According to one embodiment, the different modes of content **172** may be displayed as a series of bars across the display screen **110**, as illustrated in FIG. **12**. The following discussion of various features, including hardware navigation through the map user interface may refer primarily to the display configuration illustrated in FIG. **12**. However, it is to be appreciated that the invention is not so limited, and the modes of content may be displayed in other configurations, including, for example, a "desktop" and icon configuration, a "dashboard" type display, as illustrated in FIG. **13**, or another configuration, as would be recognized by those skilled in the art. Similarly, navigation is discussed below primarily with reference to the scroll wheel **132** and navigation buttons **166**, **168**; however, it is to be appreciation that navigation may also be accomplished using any of the conventional tools discussed above or known to those skilled in the art.

As discussed above, according to one embodiment, the scroll wheel **132** and, optionally, the navigation buttons **166**, **168** may be used to navigate the user interface. Referring again to FIG. **12**, scrolling the scroll wheel may sequentially highlight different ones of the modes of content **172**. In one example, the highlighting may be achieved by changing the color of the selected mode, and/or by providing a visual indicator, such as a colored bar **176**. A highlighted mode **172** may be selected by pressing the scroll wheel, thereby bringing up a new "page" or screen on the user interface corresponding to the selected mode. Once within a selected mode of content **172**, the scroll wheel may similarly be used to select particular functions, features or applications within that mode. In one embodiment, the default action for the scroll wheel **132** may vary depending on whether the portable computer **100** is in the laptop mode or the easel mode. For example, in easel mode, the default action for the scroll wheel may be channel selection within the channels mode **172**(*e*).

As discussed above, in one embodiment volume control for the speakers **128** may be provided by the volume control button **204** and mute button **206**. Alternatively, according to another embodiment, volume control may be provided using the scroll wheel **132**. Thus, as a user scrolls the scroll wheel **132**, as illustrated in FIG. **14** by arrow **161**, a volume indicator may appear on the display screen **110**. In one example, the volume indicator may comprise a transparent, or partially transparent, box **162** containing volume level indicators that may appear directly below the scroll wheel **132** on the display screen **110**. In this example, as the user scrolls the scroll wheel **132**, different volume levels in the volume box **162** may be successively highlighted, to indicate to the user that the volume is increasing or decreasing.

In one embodiment, the scroll wheel **132** may be depressible as well as scrollable. Thus, pressing the scroll wheel **132**, as illustrated in FIG. **15**, may allow further control, such as, for example, selecting a channel onto which the user has scrolled, or "play" and "pause" of audio or video being played through the portable computer **100**.

As discussed above, according to one embodiment, one or more navigation buttons may be used in conjunction with the scroll wheel. In particular, in one embodiment, the navigation button(s) may be used to change the action of the scroll wheel. As discussed above, in one example, the default action of the scroll wheel is volume control. This action may be changed by pressing the navigation button **166**, as illustrated in FIG. **16**, for example, from volume control to menu navigation in

the user interface, and vice versa. According to one embodiment, the effect of pressing the navigation button **166** may vary depending on active the mode of content of the portable computer **100**. For example, if a user is in the media mode using a photo viewing application, pressing the navigation button **166** may change the action of the scroll wheel **132** from mode navigation to slideshow controls for the photos. When the navigation button **166** is pressed, an control indicator box (similar to the volume indicator box **162** discussed above with reference to FIG. **14**) may appear containing different actions for the photo slideshow, such as "play," "next," "back," "skip," "full screen view," etc., and scrolling the scroll wheel **132** may allow a user to select one of these actions. Pressing the navigation button **166** again may return the scroll wheel action to menu navigation, to allow the user to, for example, move to a different feature or application within the active mode, or to select a different mode.

As can be seen in FIG. **16**, the navigation button **166** may be easily accessed when the portable computer **100** is in the easel mode, providing a convenient navigation tool for this configuration. A similar navigation button **168** may be provided on the keyboard **106**, as illustrated in FIG. **17**. In one example, the functionality of the two navigation buttons **166**, **168** may be the same, with the different locations providing easy, comfortable access in the different configuration modes (i.e., laptop or easel) of the portable computer **100**. Thus, a user may use either navigation button **166** or navigation button **168**, depending on personal preference. In another example, the two navigation buttons may have different functionality. For example, the navigation button **166** may be used to alter the action of the scroll wheel **132**, as discussed above, while the navigation button **168** is used to navigate "up" or "down" a level within the map user interface. For example, pressing the navigation button **168** while within a given mode of content may allow the user to "back up" to the home screen; or pressing the navigation button **168** while within a selected channel (in the channel mode of the content **172***e*) may allow the user to "back-up" to the channel mode main page.

It is to be appreciated that numerous variations on the functionality of the navigation buttons **166**, **168** is possible, as would be recognized by those skilled in the art, and the above examples are given for illustration only and are not intended to be limiting. In addition, any functions described with reference to one navigation button (**166** or **168**) may be instead (or additionally) implemented with the other navigation button. In one example, the function of the navigation buttons **166**, **168** may vary depending on whether the portable computer **100** is configured into the laptop mode or the easel mode. For example, only the navigation button **166** may be active in the easel mode, and only the navigation button **168** may be active in the laptop mode. Alternatively, both navigation buttons **166**, **168** may be usable in either the laptop mode or the easel mode, but their functionality may vary. For example, when the portable computer **100** is in the easel mode, the default action for the navigation button **166** may be channel selection whereas the default action for the navigation button **168** is to access the "home" screen. Furthermore, the portable computer **100** is not limited to the use of two navigation buttons and may instead comprise only a single navigation button or more than two navigation buttons, any of which may be disposed in the locations described above (e.g., on the rounded portion **120** of the base **104** or on the keyboard **106**), or in other locations on the portable computer.

As discussed above, according to one embodiment, the function or display content and/or display orientation of the portable computer may vary when the portable computer is configured from the laptop mode into the easel mode, or vice versa. For example, as discussed above, when the portable computer **100** is configured into the easel mode, the visual display on the display screen **110** is automatically rotated 180 degrees such that the information appears "right-way-up," even through the display screen is upside-down compared to when the portable computer is in the laptop mode. In another example, for at least some activities within at least some modes of content (e.g., viewing a photograph or video), when the portable computer **100** is configured into the easel mode, the display may automatically adjust to "full screen view" (i.e., the displayed image or video is displayed on the full screen size, rather than in a window) to allow for comfortable viewing.

In addition, as discussed above, the ability to configure the portable computer **100** into either the laptop mode or the easel mode provides enhanced functionality. For example, when the portable computer **100** is not being actively used, the user may configure the portable computer into the easel mode, and program the portable computer to act as a digital photo frame, displaying one or more photos of the user's choice. In the easel mode, the portable computer **100** may occupy a smaller footprint on a surface than in the laptop or closed modes because the base **104** and display component **102** are upright, as illustrated in FIGS. **4** and **5**. In addition, because the portable computer can act as a passive information and/or entertainment device, such as a photo frame or clock, as discussed above, the portable computer may provide a useful function even when not being actively used by the user, and may do so (in the easel mode) without taking up much surface area.

According to another embodiment, the portable computer **100** may further comprise a wireless signal indicator **178**, as illustrated in FIG. **18**. The wireless signal indicator **178** may indicate the availability and/or strength of a wireless signal to which the portable computer **100** is connected, or is attempting to connect to. In one example, the color of the wireless signal indicator **178** may provide information regarding the strength of a detected wireless signal. For example, green may indicate a "good" signal; yellow may indicate a "poor" or "low" signal; and red may indicate that there is no signal available. In one example, the wireless signal indicator **178** may be ON or active whenever the portable computer **100** is powered up. Alternatively, the wireless signal indicator **178** may be activated by a user action, for example, by pressing the navigation button **166** or another button or key provided on the portable computer **100**, and may remain active for a predetermined time period (e.g., for 2 seconds, 10 seconds, one minute, etc.). As discussed above, the functionality of the navigation button **166** may vary depending on the configuration mode of the portable computer **100**. In one example, when the portable computer **100** is in the closed position, but still powered up, the default action for the navigation button **166** may be to activate the wireless signal indicator **178**.

According to one embodiment, the portable computer **100** may be provided with power cord and adapter to allow the portable computer to be plugged into a wall supply. Referring to FIG. **19**, there is illustrated a view of a portion of the portable computer **100**, showing a power jack **180** to which the power adaptor can be connected. As discussed above, the portable computer **100** may also include a port **164** to which peripheral devices, such as mouse, external keyboard, portable flash drive, memory stick, etc. may be connected. In one example, the port **164** is a USB port; however, it is to be appreciated that the port may accommodate protocols other than USB. In addition, although only one port **164** is illustrated in FIG. **19**, the portable computer **100** may comprise multiple ports that may accommodate multiple protocols. In one example, the portable computer **100** may also comprise a

headphone jack **182**. It is to be appreciated that the location of any or all of the power jack **180**, port(s) **164**, and headphone jack **182** are not limited to the example shown in FIG. **19**, but may be anywhere convenient or desirable on the portable computer **100**.

Referring to FIG. **20**, there is illustrated a top down view one example of a power adaptor **184** that may be used with the portable computer **100** and connected via the power jack **180**. As known to those skilled in the art, the power adaptor **184** comprises a transformer (not shown) that converts the wall power to a level acceptable for use by the portable computer **100**. In one embodiment, the power adaptor **184** comprises a substantially round body **186** that houses the transformer and other necessary components. A connector **188** may allow the power adaptor **184** to be connected to a wall outlet or extension cord. In one example, the connector **188** may include foldable prongs **190** that can be folded against the connector **188** for storage, and folded out for connection, as illustrated in FIG. **21**. A cord **192** may be slidably accommodated within the body **186**, such that the cord may be stored within the body and flexibly extended (up to its maximum length) by a user.

According to one embodiment, the cord **192** may be wound around a cord spool **194** located within, or partially within, the body **186** of the power adaptor **184**. As illustrated in FIG. **21**, the cord spool **194** may be configured to slide out from the body **186** of the power adaptor **184**, such that the cord **192** can be wound around the cord spool **194**, as illustrated in FIGS. **22**A and **22**B.

According to another embodiment, the portable computer **100** may be configured to connect to a docking station **196**, as illustrated in FIG. **23**. In one embodiment, a connector **198** on the docking station **196** may be configured to slidably connect to connectors **200** on the portable computer **100**, as illustrated in FIG. **23**. In one example, the connectors **200** may include power and audio connectors, such that the portable computer **100** may receive power from the docking station and receive and/or provide audio signals from/to the docking station, respectively. For example, the docking station may be coupled to external speakers, and the portable computer may provide audio signals to the docking station to be played through the external speakers. In another example, the docking station **196** may also be coupled to an audio device (not shown), such as an MP3 player, which may provide audio signals and data to the portable computer **100**, for example, to update an audio library on the portable computer. It is to be appreciated that many other variations of communication between the portable computer **100** and devices coupled to the docking station **196** are possible, as would be recognized by those skilled in the art, and such variations are intended to be within the scope of this disclosure. Furthermore, numerous variations on the connector(s) **198**, **200** that couple the docking station **196** to the portable computer **100** are also possible, as would be recognized by those skilled in the art. For example, the portable computer **100** may include a multi-pin connector **202** located on the base **104**, as illustrated in FIG. **24**. Such and other variations are intended to be within the scope of this disclosure and the above-mentioned examples are provided for illustration only and are not intended to be limiting.

In addition, it is to be appreciated that although the above discussion refers primarily to the portable computer **100** being in either the laptop mode or easel mode, other modes or configurations are also possible. For example, as discussed above, because the portable computer **100** can be configured from the closed position, through the laptop mode into the easel mode by rotating the display component **102**, a number of configurations are possible in between "true" laptop mode and "true" easel mode. In another example, the portable computer **100** may be configured into a "frame" mode, as illustrated in FIG. **26**, in which the portable computer is placed on a surface **212** with the keyboard **106** "face down" on the surface **212** and the display **110** facing upward. In the frame mode, the display component **102** may be at a similar orientation, and angle **134**, with respect to the base component **104** as in the easel mode. However, rather than the base component **104** and display component **102** being oriented vertically with respect to the surface **212**, as in the easel mode (in which the portable computer forms an inverted "V" as discussed above), in the frame mode, the base component **104** may lie flat on the surface **212**, as shown in FIG. **26**. In one example, software and/or hardware protection may be provided for the keyboard to prevent keys from being pressed (or to prevent the portable computer from responding to pressed keys) when the portable computer is in the frame mode.

Similarly, referring to FIG. **27**, there is illustrated another configuration of the portable computer **100**, referring to as the "flat" mode. In the flat mode, the display component **102** may be rotated (or opened) to approximately 180 degrees with respect to the base component **104**, such that the base component and display component lay flat on a surface, with the keyboard **106** and display screen **110** exposed, as shown in FIG. **27**. Unlike the easel and frame modes, in which the keyboard may be concealed and not easily accessible, in the flat mode, the keyboard is accessible and usable. In addition, as discussed above, the visual display on the display screen **110** may be automatically rotated to accommodate comfortable viewing of information by persons located in different positions relative to the base component **104** or display component **102**. The visual display on the display screen **110** may also be manually adjusted by a user using, for example, the keyboard **106**, touch pad **108** or mouse (not shown), scroll wheel **132** or navigation buttons (not shown). For example, if a user (located at position A) wishes to display information for a person located opposite the user (at position B), the visual display may be rotated (automatically or manually) 180 degrees such that the information appears "right-way-up," to the person at location B, even through the display screen **110** is upside-down for that person. Similarly, in another example, the visual display may be rotated (automatically or manually) 90 degrees such that the information appears "right-way-up," for a person at location C. In one example, a user can "toggle" the visual display among various orientations. For example, a user at location A may have the visual display facing themselves while using the keyboard **106** or other controls to change or access information on the display, then toggle the display orientation 180 or 90 degrees to display the information for persons at locations B or C.

In summary, various aspects and embodiments provide a portable computer that is configurable between different operating modes, including a laptop mode and an easel mode, and that is capable of different display formats and functionality in the different modes. The ability to view and operate the portable computer in the different laptop and easel modes, and to incorporate features and functions such as an alarm clock, digital photograph frame, voice-over-IP, etc, may provide enhanced flexibility and usefulness. In addition, the portable computer may include a graphical user interface that may work seamlessly with the computer hardware to provide an enjoyable, holistic user experience.

Having thus described several aspects of at least one embodiment, it is to be appreciated various alterations, modifications, and improvements will readily occur to those skilled in the art. For example functionality or features that have been described herein in connection with hardware may

instead be implemented in software, or vice versa. For example, the wireless signal indicator discussed above may instead (or in addition) be provided as a software application. Such alterations, modifications, and improvements are intended to be part of this disclosure and are intended to be within the scope of the invention. Accordingly, the foregoing description and drawings are by way of example only.

What is claimed is:

1. A portable computer configurable between a plurality of display modes including a laptop mode and an easel mode wherein transitions between the plurality of display modes allows an operator to interact with a single display screen in each of the plurality of display modes, the portable computer comprising:

a base including a keyboard;

a main display component rotatably coupled to the base such that the main display component and the base are rotatable with respect to one another about a longitudinal axis running along an interface between the main display component and the base to transition between at least the laptop mode and the easel mode, the main display component including the single display screen, wherein the transition between the laptop mode and the easel mode allows the operator to operate the portable computer while viewing the single display screen in each of the plurality of display modes, wherein

the laptop mode is configured to display to a user on the main display component a first content mode having a first content display orientation with the main display component oriented towards the user and the keyboard oriented to receive input from the user;

the easel mode is configured to display to the user on the main display component a second content mode having a second content display orientation with the main display component oriented towards the user and the keyboard oriented away from the user, wherein the first and second content display orientations are 180 degrees relative to each other, and wherein the portable computer is operable in the easel mode to enable the user to interact with displayed content without interacting with the keyboard; and

a navigation control disposed at least partially within the base and rotatable about the longitudinal axis, the navigation control configured to permit a user to control at least one of operating parameters of the portable computer and content displayed on the single display screen wherein the plurality of modes includes a frame in which the main display component is oriented towards the operator, the base contacts a substantially horizontal surface, and the keyboard faces the substantially horizontal surface.

2. The portable computer of claim **1**, where the navigation control includes a scroll wheel configured to permit the user to adjust a volume of sound produced by the portable computer.

3. The portable computer of claim **1**, further comprising a first navigation button disposed on one of the base and the display component and configured to permit the user to manipulate selected content displayed on the screen.

4. The portable computer of claim **3**, wherein the screen is configured to display at least one of a plurality of modes of content; and

wherein the navigation button is configured to permit the user to select for display one of the plurality of modes of content.

5. The portable computer of claim **3**, further comprising a second navigation button;

wherein the first navigation button is disposed on a major surface of the base; and

wherein the second navigation button is disposed on a minor surface of the base.

6. The portable computer of claim **1**, wherein the navigation control includes a scroll wheel configured to permit the user to select a mode of content for display by the portable computer.

7. The portable computer of claim **1**, wherein rotating either the display component or the base about the longitudinal axis up to approximately 180 degrees from a closed mode in which the display screen is disposed substantially against the base configures the portable computer into the laptop mode; and

wherein rotating either the display component or the base about the longitudinal axis beyond approximately 180 degrees from the closed mode configures the portable computer into the easel mode.

8. The portable computer of claim **1**, wherein the frame mode is configured to display to a user on the main display component the first content mode having the first content display orientation.

9. The portable computer of claim **1**, wherein the portable computer is configured to prevent the portable computer from responding to keyboard input when the portable computer is in the frame mode.

10. A portable computer configurable between a plurality of display modes including a laptop mode and an easel mode wherein transitions between the plurality of display modes permit an operator to interact with a single display screen in each of the plurality of display modes, the portable computer comprising:

a base including a keyboard;

a main display component rotatably coupled to the base and including the single display screen which displays content;

a hinge assembly disposed at least partially within the base and the main display component that defines an axis of rotation about which both the base and the main display component are rotatable to transition the portable computer between at least the laptop mode and the easel mode, wherein the transition between the laptop mode and the easel mode allows the operator to operate the portable computer while viewing the single display screen in each of the plurality of display modes, wherein

the laptop mode is configured to display to a user on the main display component a first content mode having a first content display orientation with the main display component oriented towards the user and the keyboard oriented to receive input from the user;

the easel mode is configured to display to the user on the main display component a second content mode having a second content display orientation with the main display component oriented towards the user and the keyboard oriented away from the user, wherein the first and second content display orientations are 180 degrees relative to each other, and wherein the portable computer is operable in the easel mode to enable the user to interact with displayed content without interacting with the keyboard; and

a navigation control accessible in each of the plurality of display modes and configured to permit a user to manipulate at least one of operating parameters of the portable computer and the content displayed on the single display screen wherein the plurality of modes includes a frame mode in which the main display component is oriented towards the operator, the base con-

tacts a substantially horizontal surface, and the keyboard faces the substantially horizontal surface.

11. The portable computer of claim **10**, wherein the navigation control includes a scroll wheel disposed at least partially about the axis of rotation of the display component relative to the base.

12. The portable computer of claim **11**, wherein the scroll wheel provides a default action which effects manipulation of the at least one of the operating parameters of the portable computer, wherein the default action is defined differently responsive to a display mode of the portable computer.

13. The portable computer of claim **10**, further comprising a first navigation button user-accessible in each of the laptop mode and the easel mode, and configured to permit the user to manipulate selected content displayed on the screen.

14. The portable computer of claim **13**, wherein the screen is configured to display at least one of a plurality of modes of content; and

wherein the first navigation button is configured to permit the user to select for display one of the plurality of modes of content.

15. The portable computer of claim **13**, further comprising a second navigation button that is not user-accessible when the portable computer is in the easel mode.

16. The portable computer of claim **10**, wherein an operating display mode is selected from the plurality of display modes based on a physical orientation of the portable computer.

17. The portable computer of claim **10**, wherein an operating display mode is selected from the plurality of display modes in response to operation of the navigation control.

18. A portable computer configurable between a plurality of display modes including a laptop mode and an easel mode wherein transitions between the plurality of display modes allow an operator to interact with a single display screen in each of the plurality of display modes, the portable computer comprising:

a base including a keyboard;

a main display component including the single display screen configured to display content;

a hinge assembly disposed at least partially within the base configured to rotatably couple the main display component to the base, the hinge assembly defining a longitudinal axis running along an interface between the display component and the base about which the display component and the base are rotatable to transition the portable computer between at least the laptop mode and the easel mode, wherein the transition between the laptop mode and the easel mode allows the operator to operate the portable computer while viewing the single display screen in each of the plurality of display modes, wherein

the laptop mode is configured to display to a user on the main display component a first content mode having a first content display orientation with the main display component oriented towards the user and the keyboard oriented to receive input from the user;

the easel mode is configured to display to the user on the main display component a second content mode having a second content display orientation with the main display component oriented towards the user and the keyboard oriented away from the user, wherein the first and second content display orientations are 180 degrees relative to each other, and wherein the portable computer is operable in the easel mode to enable the user to interact with displayed content without interacting with the keyboard; and

a navigation control disposed at least partially about the longitudinal axis wherein the plurality of modes includes a frame mode in which the main display component is oriented towards the operator, the base contacts a substantially horizontal surface, and the keyboard faces the substantially horizontal surface.

19. The portable computer of claim **18**, wherein the navigation control includes a scroll wheel configured to permit a user to manipulate the content displayed on the screen.

20. The portable computer of claim **18**, wherein the navigation control includes a scroll wheel configured to permit a user to control a volume of sound played by the portable computer.

21. The portable computer of claim **18**, wherein the navigation control includes a scroll wheel disposed at least partially within the hinge assembly.

22. The portable computer of claim **18**, further comprising at least one navigation button disposed on one of the base and the display component.

* * * * *

UNITED STATES PATENT AND TRADEMARK OFFICE

CERTIFICATE OF CORRECTION

PATENT NO. : 8,624,844 B2
APPLICATION NO. : 12/170951
DATED : January 7, 2014
INVENTOR(S) : Yves Behar et al.

It is certified that error appears in the above-identified patent and that said Letters Patent is hereby corrected as shown below:

In the Claims:

Column 17, Claim 1, Line 47, insert -- mode -- after the word "frame".

Signed and Sealed this
First Day of April, 2014

Michelle K. Lee

Michelle K. Lee
Deputy Director of the United States Patent and Trademark Office