IN THE UNITED STATES DISTRICT COURT
FOR THE DISTRICT OF DELAWARE

LITL LLC, Plaintiff, v. DELL TECHNOLOGIES INC., and DELL INC., Defendants.	Civil Action No. 23-cv-00121-RGA **JURY TRIAL DEMANDED**

FIRST AMENDED COMPLAINT

Pursuant to Federal Rule of Civil Procedure 15(a)(1), Plaintiff LiTL LLC ("Plaintiff" or "LiTL") files this First Amended Complaint, which amends LiTL's complaint for patent infringement (D.I. 1, the "Original Complaint") against Defendants Dell Technologies Inc. and Dell Inc. (collectively, "Defendants" or "Dell").

INTRODUCTION

1. This is a civil action for patent infringement under the laws of the United States, 35 U.S.C. § 1, et seq.

2. Defendants have infringed and continue to infringe one or more claims of U.S. Patent Nos. 8,289,688 ("the '688 patent"); 8,624,844 ("the '844 patent"); 9,563,229 ("the '229 patent "); 10,289,154 ("the '154 patent"); 9,003,315 ("the '315 patent"); 9,880,715 ("the '715 patent"); 10,564,818 ("the '818 patent"); and 8,612,888 ("the '888 patent") (collectively, the "Asserted Patents") at least by making, using, selling, offering for sale, and importing into the United States computing devices that infringe one or more claims of each of the Asserted Patents.

LiTL Exhibit 2029
MSFT v. LiTL
IPR2024-00456

3. LiTL is the legal owner by assignment of the entire right, title, and interest in and to the Asserted Patents, which were duly and legally issued by the United States Patent and Trademark Office ("USPTO"). LiTL seeks monetary damages and injunctive relief to address past and ongoing infringement of its valuable patent portfolio.

THE PARTIES

4. Plaintiff LiTL LLC is a Delaware company, having its principal place of business at 501 Boylston Street, Boston, Massachusetts 02116.

5. Defendant Dell Technologies Inc. is a corporation organized under the laws of the State of Delaware, with a place of business at One Dell Way, Round Rock, Texas 78682.

6. Defendant Dell Inc., a subsidiary of Dell Technologies Inc., is a corporation organized under the laws of the State of Delaware, with a place of business at One Dell Way, Round Rock, Texas 78682.

JURISDICTION AND VENUE

7. This action arises under the patent laws of the United States, Title 35 of the United States Code. This Court has subject matter jurisdiction over this action pursuant to 28 U.S.C. §§ 1331 and 1338(a).

8. This Court has personal jurisdiction over Dell. Defendants are subject to general personal jurisdiction in the State of Delaware because they are incorporated in the State of Delaware.

9. Venue is proper in this District under 28 U.S.C. §§ 1391 and 1400(b). Defendants are incorporated in this District. Upon information and belief, Defendants have transacted business in this District and have committed acts of direct and indirect infringement in this District by, among other things, making, using, offering to sell, selling, and/or importing products that infringe the Asserted Patents.

FACTUAL BACKGROUND

LiTL's Patented Technologies

10. In 2007, John Chuang had a vision for a new type of computer. He recognized that traditional computers are designed to meet the needs of everyone from a six year old to the largest employers on earth. Mr. Chuang set out to build a computer for the home that offered a simplified operating environment. Mr. Chuang founded LiTL and assembled a team of hardware and software engineers and user interface designers to achieve his vision.

11. LiTL developed a webbook, a portable computing device, which launched in 2009. LiTL focused on how a family typically uses the Internet in the home, and optimized the webbook's user interface for consuming Internet content.

http://web.archive.org/web/20091204052449/http://www.litl.com/essays/hardware.htm

12. The webbook provided multiple display modes. In laptop mode, users access a keyboard and touchpad to browse the Internet and access apps that can be arranged as a set of cards.

http://web.archive.org/web/20091204052449/http://www.litl.com/essays/hardware.htm

13. Rotating the webbook display into "easel mode" allows users to easily consume content from the Internet via a streamlined, intuitive interface.

http://web.archive.org/web/20091201114605/http://www.litl.com/easy-to-use/intuitive-interface.htm

14. In easel mode the webbook's keyboard faces away from the user, and content is enlarged on the display for easier viewing from further away.

http://web.archive.org/web/20130420102239/http://litl.com/webbook/meet-webbook/more-fun.htm

15. The webbook can also be configured in "frame mode," in which the keyboard faces down into the surface on which the webbook rests.

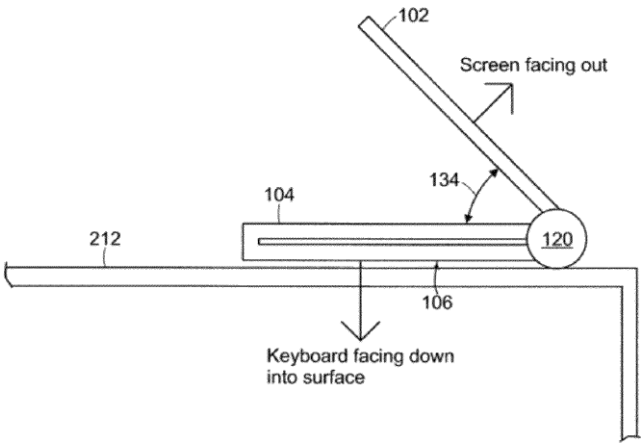

’688 patent, Figure 26.

16. The webbook delivers content from a user’s favorite websites via “channels” to provide an experience that resembles watching television.

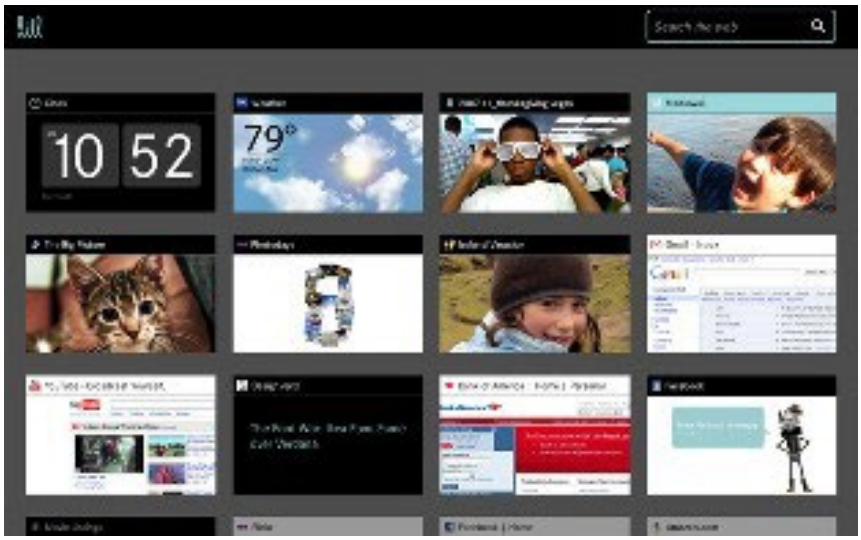

http://web.archive.org/web/20091204052453/http://www.litl.com/essays/software.htm

17. LiTL's investment in innovation has produced a portfolio that includes over 30 patents in the United States as well as additional patents in other countries across the globe.

LiTL's Asserted Patents

18. This First Amended Complaint focuses on eight LiTL patents directed to various aspects of computing devices that can be used in multiple display modes.

19. LiTL is the current owner by assignment of the entire right, title, and interest in and to the '688 patent titled "Portable computer with multiple display configurations." The '688 patent was duly and legally issued on October 16, 2012. The patent is generally directed to portable computers configurable between a plurality of display modes. A copy of the '688 patent is attached as Exhibit A.

20. LiTL is the current owner by assignment of the entire right, title, and interest in and to the '844 patent titled "Portable computer with multiple display configurations." The '844 patent was duly and legally issued on January 7, 2014. The patent is generally directed to portable computers configurable between a plurality of display modes. A copy of the '844 patent is attached as Exhibit B.

21. LiTL is the current owner by assignment of the entire right, title, and interest in and to the '229 patent titled "Portable computer with multiple display configurations." the '229 patent was duly and legally issued on February 7, 2017. The patent is generally directed to portable computers configurable between a plurality of display modes. A copy of the '229 patent is attached as Exhibit C.

22. LiTL is the current owner by assignment of the entire right, title, and interest in and to the '154 patent titled "Portable computer with multiple display configurations." The '154 patent was duly and legally issued on May 14, 2019. The patent is generally directed to portable

computers configurable between a plurality of display modes. A copy of the ’154 patent is attached as Exhibit D.

23. LiTL is the current owner by assignment of the entire right, title, and interest in and to the ’315 patent titled “System and method for streamlining user interaction with electronic content.” The ’315 patent was duly and legally issued on April 7, 2015. The patent is generally directed to a user interface configured to display a plurality of views of computer content. A copy of the ’315 patent is attached as Exhibit E.

24. LiTL is the current owner by assignment of the entire right, title, and interest in and to the ’715 patent titled “System and method for streamlining user interaction with electronic content.” The ’715 patent was duly and legally issued on January 30, 2018. The patent is generally directed to a user interface configured to display a plurality of views of computer content. A copy of the ’715 patent is attached as Exhibit F.

25. LiTL is the current owner by assignment of the entire right, title, and interest in and to the ’818 patent titled “System and method for streamlining user interaction with electronic content.” The ’818 patent was duly and legally issued on February 18, 2020. The patent is generally directed to a user interface configured to display a plurality of views of computer content. A copy of the ’818 patent is attached as Exhibit G.

26. LiTL is the current owner by assignment of the entire right, title, and interest in and to the ’888 patent titled “Method and apparatus for managing digital media content.” The ’888 patent was duly and legally issued on December 17, 2013. The patent relates generally to accessing and managing digital media libraries on streamlined computing devices with a plurality of selectable I/O profiles. A copy of the ’888 patent is attached as Exhibit H.

27. LiTL has complied with its obligations under 35 U.S.C. § 287 for each of the Asserted Patents.

28. The Asserted Patents are well-known to personal computing companies because the Asserted Patents and their published applications have been frequently cited during prosecution of patent applications owned by personal computing companies.

29. The Asserted Patents belong to a family whose members have been cited in over 1,000 third-party patents and published applications.

30. The ’688 patent and its corresponding published application have been cited in over 250 patents or patent applications, including many that are assigned to major players in the personal computing space such as Dell. The ’844 patent and its corresponding published application have been cited in over 100 patents or patent applications, including many that are assigned to major players in the personal computing space such as Dell.

31. The ’229, ’154, ’315, ’715, ’818 and ’888, patents are descendants of the ’688 patent.

32. Given the numerous patents directed to Dell’s convertible (also referred to as “2-in-1”) laptops, the citations to the ’688 patent and corresponding published applications in Dell’s own patent applications, on information and belief Dell was aware of at least the ’688 patent and the ’844 patent, before the filing of the Original Complaint, Dell was aware of each of the Asserted Patents and knew that Dell’s convertible design infringes the Asserted Patents since at least the filing of the Original Complaint.

Dell’s Incorporation of LiTL’s Patented Technologies into Its Computing Devices

33. The allegations provided below are exemplary and without prejudice to LiTL’s infringement contentions. In providing these allegations, LiTL does not convey or imply any

particular claim constructions or the precise scope of the claims. LiTL's claim construction contentions regarding the meaning and scope of the claim terms will be provided under the Court's scheduling order and local rules.

34. The infringing products include, but are not limited to, Latitude 3120 2-in-1; Latitude 3189 2-in-1; Latitude 3190 2-in-1; Latitude 3310 2-in-1; Latitude 3330 2-in-1; Latitude 3379 2-in-1; Latitude 3390 2-in-1; Latitude 5289 2-in-1; Latitude 5300 2-in-1; Latitude 5310 2-in-1; Latitude 5320 2-in-1; Latitude 5330 2-in-1; Latitude 7310 2-in-1; Latitude 7330 2-in-1; Latitude 7389 2-in-1; Latitude 7390 2-in-1; Latitude 7400 2-in-1; Latitude 7410 2-in-1; Latitude 7420 2-in-1; Latitude 7430 2-in-1; Latitude 9330 2-in-1; Latitude 9410 2-in-1; Latitude 9420 2-in-1; Latitude 9430 2-in-1; Latitude 9510 2-in-1; Latitude 9520 2-in-1; Inspiron 3153 2-in-1; Inspiron 3158 2-in-1; Inspiron 3168 2-in-1; Inspiron 3169 2-in-2; Inspiron 3179 2-in-1; Inspiron 3185 2-in-1; Inspiron 3195 2-in-1; Inspiron 5368 2-in-1; Inspiron 5378 2-in-1; Inspiron 5379 2-in-1; Inspiron 5400 2-in-1; Inspiron 5406 2-in-1; Inspiron 5410 2-in-1; Inspiron 5481 2-in-1; Inspiron 5482 2-in-1; Inspiron 5485 2-in-1; Inspiron 5491 2-in-1; Inspiron 5568 2-in-1; Inspiron 5578 2-in-1; Inspiron 5579 2-in-1; Inspiron 5582 2-in-1; Inspiron 5591 2-in-1; Inspiron 7300 2-in-1; Inspiron 7306 2-in-1; Inspiron 7353 2-in-1; Inspiron 7359 2-in-1; Inspiron 7368 2-in-1; Inspiron 7373 2-in-1; Inspiron 7375 2-in-1; Inspiron 7378 2-in-1; Inspiron 7386 2-in-1; Inspiron 7390 2-in-1; Inspiron 7391 2-in-1; Inspiron 7405 2-in-1; Inspiron 7415 2-in-1; Inspiron 7420 2-in-1; Inspiron 7425 2-in-1; Inspiron 7500 2-in-1; Inspiron 7506 2-in-1; Inspiron 7568 2-in-1; Inspiron 7569 2-in-1; Inspiron 7573 2-in-1; Inspiron 7579 2-in-1; Inspiron 7586 2-in-1; Inspiron 7590 2-in-1; Inspiron 7591 2-in-1; Inspiron 7620 2-in-1; Inspiron 7706 2-in-1; Inspiron 7773 2-in-1; Inspiron 7778 2-in-1; Inspiron 7779 2-in-1; Inspiron 7786 2-in-1; Inspiron 7791 2-in-1; XPS 13 7390 2-in-1; XPS 13 9310 2-in-1; XPS 13 9365 2-in-1; and XPS 15 9575 2-in-1

("Accused Products"). The Accused Products are non-limiting examples that were identified based on publicly available information, and LiTL reserves the right to identify additional infringing activities, products and services, including, for example, on the basis of information obtained during discovery.

35. Dell distinguishes between their conventional laptops and convertible models by including the "2-in-1" designation in the product name. Dell's support website, https://www.dell.com/support/home/en-us, provides literature, service manuals, product specifications, user guides, and other materials that encourage customers to purchase the Accused Products and depict their multi-mode functionality. Dell provides a Service Manual and a Setup and Specifications documents that describe the convertible configurations of its Latitude, Inspiron and XPS products.

36. For example, the Setup and Specifications document for the Latitude 5330 covers both the conventional and convertible versions of this device, and describes the differences between the two configurations. The document depicts four user modes (i.e., notebook, tablet, tent, and stand) for the convertible configuration of the Latitude 5330.

Stand	Tent

See, e.g., https://dl.dell.com/content/manual29903967-latitude-5330-latitude-5330-2in1-setup-and-specifications.pdf, pp. 10-12.

Table 3. Dimensions and weight

Description	Values
Height:	
Front height	16.92 mm (0.67 in.)
Rear height	18.43 mm (0.73 in.)
Width	305.70 mm (12.04 in.)
Depth	207.50 mm (8.17 in.)
Weight (minimum)	• Laptop: 1.20 kg (2.65 lb) • 2-in-1: 1.32 kg (2.91 lb) **NOTE:** The weight of your computer depends on the configuration ordered and manufacturing variability.

Id., p. 13 (distinguishing between the minimum weight between the "Laptop" and "2-in-1" configuration).

Table 20. Display specifications

Description		Option one	Option two	Option three	Option for 2-in-1 only
Display type		Full High Definition (FHD)	Full High Definition (FHD), low blue light	Full High Definition (FHD)	Full High Definition (FHD)
Display-panel technology		Wide Viewing Angle (WVA)	Wide-Viewing Angle (WVA)	Wide Viewing Angle (WVA)	Wide-Viewing Angle (WVA)
Display-panel dimensions (active area):					
	Height	165.24 mm (6.51 in.)	165.24 mm (6.51 in.)	165.24 mm (6.51 in.)	165.24 mm (6.51 in.)
	Width	293.76 mm (11.57 in.)	293.76 mm (11.57 in.)	293.76 mm (11.57 in.)	293.76 mm (11.57 in.)
	Diagonal	337.08 mm (13.27 in.)	337.08 mm (13.27 in.)	337.08 mm (13.27 in.)	337.08 mm (13.27 in.)
Display-panel native resolution		1920 x 1080	1920 x 1080	1920 x 1080	1920 x 1080
Luminance (typical)		250 nits	400 nits	300 nits	270 nits
Megapixels		2073600	2073600	2073600	2073600
Color gamut		45% NTSC typ.	100% sRGB typ.	72% NTSC typ.	100% sRGB typ.
Pixels Per Inch (PPI)		166	166	166	166
Contrast ratio (typical)		800:1	1000:1	700:1	600:1
Response time (max)		35 ms	35 ms	35 ms	35 ms
Refresh rate		60 Hz	60 Hz	60 Hz	60 Hz
Horizontal view angle		80/80 min. 85/85 typ. +/- degrees	80/80 min. 85/85 typ. +/- degrees	80/80 min. 85/85 typ. +/- degrees	80/80 min. 85/85 typ. +/- degrees
Vertical view angle		80/80 min. 85/85 typ. +/- degrees	80/80 min. 85/85 typ. +/- degrees	80/80 min. 85/85 typ. +/- degrees	80/80 min. 85/85 typ. +/- degrees
Pixel pitch		0.153 x 0.153 mm	0.153 x 0.153 mm	0.153 x 0.153 mm	0.153 x 0.153 mm

Id., pp. 22-23 (distinguishing between the display specifications, the final column corresponding to a "2-in-1" configuration).

Table 22. Sensor

Sensor support
Ambient Light Sensor on the hinge-up (optional)
P-sensor on the hinge-up (optional)
1 Accelerometer in the base (system board) for both Clamshell and 2-in-1
1 Accelerometer (Accelerometer + Gyro) in the hinge-up sensor board (Upsell on clamshell with Proximity/ALS/IR camera and 100% attached on 2-in-1)

Id., p. 23 (distinguishing between the sensor configuration and number of accelerometers in the "Clamshell" and "2-in-1" configuration).

37. As another example, the Setup and Specifications document for the Inspiron 7391 2-in-1 describes the Accused Product's four display modes (i.e., notebook, tablet, stand, and tent mode).

See, e.g., https://dl.dell.com/topicspdf/inspiron-13-7391-2-in-1-laptop_users-guide_en-us.pdf, pp. 9-10.

38. As another example, the Setup and Specifications document for the XPS 13 7390 2-in-1 describes the Accused Product's four display modes (i.e., notebook, tablet, stand, and tent mode).

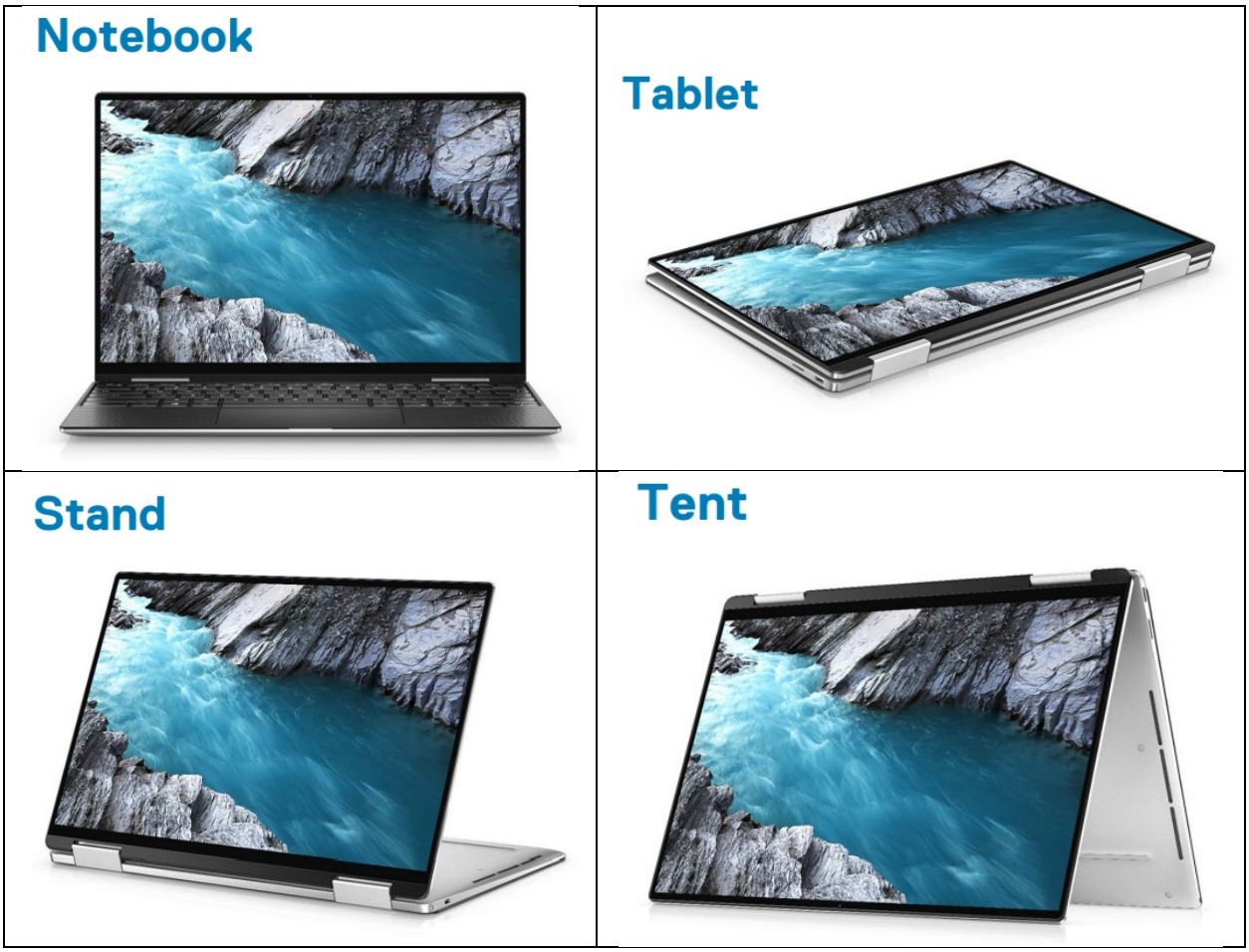

See, e.g., https://dl.dell.com/topicspdf/xps-13-7390-2-in-1-laptop_setup-guide_en-us.pdf, pp. 9-10.

39. Dell's website describes "the differences between a laptop and a 2-in-1" and touts the superior portability, versatility, and battery power of convertible (2-in-1) devices circa 2014:

> **Portability** – A laptop may not exactly be an anchor, but it still requires more muscle to lug around than your typical 2-in-1, which offers both laptop and tablet functionality at a surprisingly low weight (roughly 2.5 pounds). Flip-screen hybrids are also thinner than traditional convertibles, making them that much easier to move around. And let's not even get started on the amount of effort needed to tote both a laptop and a tablet. *Edge: 2-in-1*
>
> **Versatility** – A 2-in-1 with a flip-screen design offers four-way flexibility: tablet mode, laptop mode, stand mode (perfect for watching TV or a movie) and tent mode (a V-shaped easel stable enough for full touch-screen interaction). Designed

> to be handled, a 2-in-1's soft-touch exterior also makes it more durable. Simply put, a laptop and its traditional clamshell design cannot compete. *Edge: 2-in-1*
>
> **Power** – The longest-lasting laptops can reach the 12-hour mark, with the average clocking at eight to nine hours per charge. But the best flip-screen 2-in-1's are getting more and more powerful, with the newest on the market offering roughly 9.5 hours per charge. *Edge: 2-in-1*

https://www.dell.com/en-us/blog/laptop-vs-2-in-1-which-is-better/.

40. Dell makes, uses, sells, offers for sale and imports the Latitude 5330 2-in-1, which is described on Dell's website:

- https://www.dell.com/en-us/shop/dell-laptops/latitude-5330-laptop-or-2-in-1/spd/latitude-13-5330-laptop ("Latitude 5330 2-in-1 Webpage")
- https://dl.dell.com/content/manual29903967-latitude-5330-latitude-5330-2in1-setup-and-specifications.pdf ("Latitude 5330 2-in-1 Specifications")
- https://dl.dell.com/content/manual27461876-latitude-5330-latitude-5330-2in1-service-manual.pdf ("Latitude 5330 2-in-1 Service Manual")
- https://www.dell.com/support/kbdoc/en-us/000132403/how-to-enable-or-disable-tablet-mode-on-your-notebook-in-windows-10 ("Dell 2-in-1 Tablet Mode Support")

41. Dell's website discusses the benefits of convertible notebook configurations and describes at least four operating modes: Laptop mode, Tent mode, Stand mode, and Tablet mode. According to Dell, the convertible laptop configurations present "key advantages over standard laptops" allowing users to "easily switch from typing up an email in laptop mode, to reading an e-book in tablet mode, to video chatting in tent mode," and to "adjust between tent or stand mode to watch movies, video chat, or consume content in general." *See* https://www.dell.com/en-us/lp/best-2-in-1-laptops.

42. On information and belief, the Accused Products identified in the table below are convertible laptops, which are capable of operating in four operating modes (i.e., notebook, tablet, stand, and tent mode):

Latitude 3120 2-in-1	https://dl.dell.com/content/manual33593571-latitude-3120-latitude-3120-2-in-1-setup-and-specifications.pdf
Latitude 3189 2-in-1	https://dl.dell.com/topicspdf/latitude-11-3189-2-in-1-laptop_owners-manual_en-us.pdf
Latitude 3190 2-in-1	https://dl.dell.com/topicspdf/latitude-11-3190-2-in-1-laptop_owners-manual_en-us.pdf
Latitude 3310 2-in-1	https://dl.dell.com/topicspdf/latitude-13-3310-2-in-1-laptop_owners-manual_en-us.pdf
Latitude 3330 2-in-1	https://dl.dell.com/content/manual53282019-latitude-3330-latitude-3330-2-in-1-setup-and-specifications.pdf
Latitude 3379 2-in-1	https://dl.dell.com/topicspdf/latitude-13-3379-2-in-1-laptop_owners-manual_en-us.pdf
Latitude 3390 2-in-1	https://dl.dell.com/topicspdf/latitude-13-3390-2-in-1-laptop_owners-manual5_en-us.pdf
Latitude 5289 2-in-1	https://dl.dell.com/content/manual34591402-latitude-5289-2-in-1-owner-s-manual.pdf?language=en-us&ps=true
Latitude 5300 2-in-1	https://dl.dell.com/topicspdf/latitude-13-5300-2-in-1-laptop_owners-manual_en-us.pdf
Latitude 5310 2-in-1	https://dl.dell.com/topicspdf/latitude-13-5310-2-in-1-laptop_owners-manual_en-us.pdf
Latitude 5320 2-in-1	https://dl.dell.com/content/manual40442222-latitude-5320-latitude-5320-2in1-setup-and-specifications-guide.pdf
Latitude 5330 2-in-1	https://dl.dell.com/content/manual29903967-latitude-5330-latitude-5330-2in1-setup-and-specifications.pdf
Latitude 7310 2-in-1	https://dl.dell.com/topicspdf/latitude-13-7310-2-in-1-laptop_owners-manual2_en-us.pdf
Latitude 7330 2-in-1	https://dl.dell.com/content/manual34811490-latitude-7330-latitude-7330-2-in-1-setup-and-specifications.pdf
Latitude 7389 2-in-1	https://dl.dell.com/topicspdf/latitude-13-7389-2-in-1-laptop_owners-manual_en-us.pdf
Latitude 7390 2-in-1	https://dl.dell.com/topicspdf/latitude-13-7390-2-in-1-laptop_owners-manual3_en-us.pdf

Latitude 7400 2-in-1	https://dl.dell.com/topicspdf/latitude-14-7400-2-in-1-laptop_owners-manual2_en-us.pdf
Latitude 7410 2-in-1	https://dl.dell.com/topicspdf/latitude-14-7410-2-in-1-laptop_owners-manual2_en-us.pdf
Latitude 7420 2-in-1	https://dl.dell.com/content/manual43859724-latitude-7420-latitude-7420-2-in-1-setup-and-specifications.pdf
Latitude 7430 2-in-1	https://dl.dell.com/content/manual46425537-latitude-7430-latitude-7430-2-in-1-setup-and-specifications.pdf
Latitude 9330 2-in-1	https://dl.dell.com/content/manual39084778-latitude-9330-setup-and-specifications.pdf
Latitude 9410 2-in-1	https://dl.dell.com/topicspdf/latitude-14-9410-2-in-1-laptop_owners-manual_en-us.pdf
Latitude 9420 2-in-1	https://dl.dell.com/content/manual20845082-latitude-9420-latitude-9420-2-in-1-setup-and-specifications.pdf
Latitude 9430 2-in-1	https://dl.dell.com/content/manual48581782-latitude-9430-latitude-9430-2-in-1-setup-and-specifications.pdf
Latitude 9510 2-in-1	https://dl.dell.com/topicspdf/latitude-15-9510-2-in-1-laptop_owners-manual5_en-us.pdf
Latitude 9520 2-in-1	https://dl.dell.com/content/manual23879139-latitude-9520-latitude-9520-2-in-1-setup-and-specifications.pdf
Inspiron 3153 2-in-1	https://downloads.dell.com/manuals/all-products/esuprt_laptop/esuprt_inspiron_laptop/inspiron-11-3153
Inspiron 3158 2-in-1	https://dl.dell.com/manuals/all-products/esuprt_laptop/esuprt_inspiron_laptop/inspiron-11-3158
Inspiron 3168 2-in-1	https://dl.dell.com/manuals/all-products/esuprt_laptop/esuprt_laptop_inspiron/esuprt_laptop_inspiron_3000/
Inspiron 3169 2-in-1	https://dl.dell.com/manuals/all-products/esuprt_laptop/esuprt_laptop_inspiron/esuprt_laptop_inspiron_3000/
Inspiron 3179 2-in-1	https://dl.dell.com/topicspdf/inspiron-11-3179-2-in-1-laptop_specifications_en-us.pdf
Inspiron 3185 2-in-1	https://dl.dell.com/topicspdf/inspiron-11-3185-2-in-1-laptop_setup-guide_en-us.pdf
Inspiron 3195 2-in-1	https://dl.dell.com/topicspdf/inspiron-11-3195-2-in-1-laptop_setup-guide_en-us.pdf

Inspiron 5368 2-in-1	https://dl.dell.com/manuals/all-products/esuprt_laptop/esuprt_inspiron_laptop/
Inspiron 5378 2-in-1	https://dl.dell.com/topicspdf/inspiron-13-5378-2-in-1-laptop_service-manual_en-us.pdf
Inspiron 5379 2-in-1	https://dl.dell.com/topicspdf/inspiron-13-5379-2-in-1-laptop_specifications_en-us.pdf
Inspiron 5400 2-in-1	https://dl.dell.com/topicspdf/inspiron-14-5400-2-in-1-laptop_users-guide_en-us.pdf
Inspiron 5406 2-in-1	https://dl.dell.com/topicspdf/inspiron-14-5406-2-in-1-laptop_users-guide_en-us.pdf
Inspiron 5410 2-in-1	https://dl.dell.com/topicspdf/inspiron-14-5410-2-in-1-laptop_setup-guide_en-us.pdf
Inspiron 5481 2-in-1	https://dl.dell.com/topicspdf/inspiron-14-5481-2-in-1-laptop_users-guide_en-us.pdf
Inspiron 5482 2-in-1	https://dl.dell.com/topicspdf/inspiron-14-5482-2-in-1-laptop_users-guide_en-us.pdf
Inspiron 5485 2-in-1	https://dl.dell.com/topicspdf/inspiron-14-5485-2-in-1-laptop_users-guide_en-us.pdf
Inspiron 5491 2-in-1	https://dl.dell.com/topicspdf/inspiron-14-5491-2-in-1-laptop_users-guide_en-us.pdf
Inspiron 5568 2-in-1	https://dl.dell.com/topicspdf/inspiron-15-5568-2-in-1-laptop_setup-guide_en-us.pdf
Inspiron 5578 2-in-1	https://dl.dell.com/topicspdf/inspiron-15-5578-2-in-1-laptop_setup-guide_en-us.pdf
Inspiron 5579 2-in-1	https://dl.dell.com/topicspdf/inspiron-15-5579-2-in-1-laptop_setup-guide_en-us.pdf
Inspiron 5582 2-in-1	https://dl.dell.com/topicspdf/inspiron-15-5582-2-in-1-laptop_users-guide_en-us.pdf
Inspiron 5591 2-in-1	https://dl.dell.com/topicspdf/inspiron-15-5591-2-in-1-laptop_users-guide_en-us.pdf
Inspiron 7300 2-in-1	https://dl.dell.com/topicspdf/inspiron-13-7300-2-in-1-laptop_users-guide_en-us.pdf
Inspiron 7306 2-in-1	https://dl.dell.com/topicspdf/inspiron-13-7306-2-in-1-laptop_users-guide_en-us.pdf
Inspiron 7353 2-in-1	https://dl.dell.com/topicspdf/inspiron-13-7353-laptop_service-manual_en-us.pdf

Inspiron 7359 2-in-1	https://dl.dell.com/manuals/all-products/esuprt_laptop/esuprt_inspiron_laptop/
Inspiron 7368 2-in-1	https://dl.dell.com/topicspdf/inspiron-13-7368-2-in-1-laptop_service-manual_en-us.pdf
Inspiron 7373 2-in-1	https://dl.dell.com/topicspdf/inspiron-13-7373-2-in-1-laptop_specifications_en-us.pdf
Inspiron 7375 2-in-1	https://dl.dell.com/topicspdf/inspiron-13-7375-2-in-1-laptop_setup-guide_en-us.pdf
Inspiron 7378 2-in-1	https://dl.dell.com/topicspdf/inspiron-13-7378-2-in-1-laptop_service-manual_en-us.pdf
Inspiron 7386 2-in-1	https://dl.dell.com/topicspdf/inspiron-13-7386-2-in-1-laptop_users-guide_en-us.pdf
Inspiron 7390 2-in-1	https://dl.dell.com/topicspdf/inspiron-13-7390-2-in-1-laptop_setup-guide_en-us.pdf
Inspiron 7391 2-in-1	https://dl.dell.com/topicspdf/inspiron-13-7391-2-in-1-laptop_users-guide_en-us.pdf
Inspiron 7405 2-in-1	https://dl.dell.com/topicspdf/inspiron-14-7405-2-in-1-laptop_users-guide_en-us.pdf
Inspiron 7415 2-in-1	https://dl.dell.com/topicspdf/inspiron-14-7415-2-in-1-laptop_setup-guide_en-us.pdf
Inspiron 7500 2-in-1	https://dl.dell.com/topicspdf/inspiron-15-7500-2-in-1-silver-laptop_users-guide_en-us.pdf
Inspiron 7506 2-in-1	https://dl.dell.com/topicspdf/inspiron-15-7506-2-in-1-laptop_users-guide2_en-us.pdf
Inspiron 7568 2-in-1	https://dl.dell.com/topicspdf/inspiron-15-7568-laptop_service-manual_en-us.pdf
Inspiron 7569 2-in-1	https://dl.dell.com/topicspdf/inspiron-15-7569-2-in-1-laptop_setup-guide_en-us.pdf
Inspiron 7573 2-in-1	https://dl.dell.com/topicspdf/inspiron-15-7573-2-in-1-laptop_specifications_en-us.pdf
Inspiron 7579 2-in-1	https://dl.dell.com/topicspdf/inspiron-15-7579-2-in-1-laptop_setup-guide_en-us.pdf
Inspiron 7586 2-in-1	https://dl.dell.com/topicspdf/inspiron-15-7586-2-in-1-laptop_users-guide_en-us.pdf
Inspiron 7590 2-in-1	https://dl.dell.com/topicspdf/inspiron-15-7590-2-in-1-laptop_setup-guide_en-us.pdf

Inspiron 7591 2-in-1	https://dl.dell.com/topicspdf/inspiron-15-7591-2-in-1-laptop_users-guide_en-us.pdf
Inspiron 7706 2-in-1	https://dl.dell.com/topicspdf/latitude-11-3189-2-in-1-laptop_owners-manual_en-us.pdf
Inspiron 7773 2-in-1	https://dl.dell.com/topicspdf/inspiron-17-7773-2-in-1-laptop_users-guide_en-us.pdf
Inspiron 7778 2-in-1	https://dl.dell.com/topicspdf/inspiron-17-7778-2-in-1-laptop_service-manual_en-us.pdf
Inspiron 7779 2-in-1	https://dl.dell.com/topicspdf/inspiron-17-7779-2-in-1-laptop_service-manual_en-us.pdf
Inspiron 7786 2-in-1	https://dl.dell.com/topicspdf/inspiron-17-7786-2-in-1-laptop_users-guide_en-us.pdf
Inspiron 7791 2-in-1	https://dl.dell.com/topicspdf/inspiron-17-7791-2-in-1-laptop_users-guide_en-us.pdf
XPS 13 7390 2-in-1	https://dl.dell.com/topicspdf/xps-13-7390-2-in-1-laptop_setup-guide_en-us.pdf
XPS 13 9310 2-in-1	https://dl.dell.com/content/manual40030076-xps-13-2-in-1-9310-2n1-setup-and-specifications.pdf
XPS 13 9365 2-in-1	https://www.dell.com/support/home/en-us/product-support/product/xps-13-9365-2-in-1-laptop/drivers
XPS 15 9575 2-in-1	https://dl.dell.com/topicspdf/xps-15-9575-2-in-1-laptop_specifications_en-us.pdf

43. As detailed below, each element of at least one claim of each of the Asserted Patents is literally present in the Accused Products, or is literally practiced by Dell personnel, agents or customers who use the Accused Products. To the extent that any element is not literally present or practiced, each such element is present or practiced under the doctrine of equivalents.

44. Dell has made extensive use of LiTL's patented technologies, including the technology described and claimed in the Asserted Patents. LiTL is committed to defending its proprietary and patented technology. LiTL requests that this Court award it damages sufficient to compensate for Dell's infringement of the Asserted Patents, find this case exceptional and

award LiTL its attorneys' fees and costs, and grant an injunction against Dell to prevent ongoing infringement of the Asserted Patents.

COUNT I

(Infringement of U.S. Patent No. 8,289,688)

45. LiTL incorporates by reference and realleges all the foregoing paragraphs of the First Amended Complaint as if fully set forth herein.

Dell's Direct Infringement

46. Dell has directly infringed and continues to directly infringe, literally and/or equivalently, one or more claims of the '688 patent, including at least claim 19, including by importing, using, selling, and offering for sale in the United States the Accused Products.

47. The Accused Products (*e.g.*, the Latitude 5330 2-in-1) are portable computers that include a base unit comprising an integrated keyboard and a single display unit including a single display screen configured to display content. For example:

48. The Accused Products (*e.g.*, the Latitude 5330 2-in-1) include an orientation sensor which detects a physical orientation of the single display unit relative to the base unit and a display orientation module which orients the content displayed on the single display screen

responsive to the physical orientation detected by the orientation sensor between at least a first content display orientation and a second content display orientation, the second content display orientation being 180 degrees relative to the first content display orientation. For example:

Table 22. Sensor

Sensor support
Ambient Light Sensor on the hinge-up (optional)
P-sensor on the hinge-up (optional)
1 Accelerometer in the base (system board) for both Clamshell and 2-in-1
1 Accelerometer (Accelerometer + Gyro) in the hinge-up sensor board (Upsell on clamshell with Proximity/ALS/IR camera and 100% attached on 2-in-1)

See, e.g., Latitude 5330 2-in-1 Specifications, p. 23.

First content display orientation in laptop mode

Second content display orientation in easel mode

49. The Accused Products (*e.g.*, the Latitude 5330 2-in-1) include a display orientation module that is configured to detect a change between a laptop mode, an easel mode, and a frame mode based on the detected physical orientation of the single display unit relative to the base unit. For example:

Laptop mode

Easel mode

Frame mode

50. The Accused Products (*e.g.*, the Latitude 5330 2-in-1) include a display orientation module further configured to trigger a display inversion from one of the first and second content display orientations to the other of the first and second content display orientations responsive to the orientation sensor detecting the change between the laptop mode and the easel mode. For example:

First content display orientation in laptop mode

Second content display orientation in easel mode

51. The Accused Products (*e.g.*, the Latitude 5330 2-in-1) include a display orientation module further configured to trigger a display inversion from one of the first and second content display orientations to the other of the first and second content display

orientations responsive to the orientation sensor detecting the change between the easel mode and the frame mode. For example:

Easel mode

Frame mode

Dell's Knowledge of the Patents Owned by Its Subsidiary Dell Products L.P.

52. In each of Dell's 10-K statements from 2017 through 2022, Dell has reported the number issued patents and patent applications that it owns.

53. On information and belief, the vast majority of Dell's patents and patent applications are assigned to Dell Products, L.P. ("Dell Products").

54. Dell Products is a wholly-owned subsidiary of Dell Inc. *See REC Software USA, Inc. v. Dell Inc. et al*, No. 2:14-cv-01048, D.I. 20 (Aug. 19, 2014 W.D. Wash.); *Trustees of Boston University v. Dell Inc. et al*, No. 1:13-cv-12330, D.I. 15 (Nov. 4, 2013 D. Mass.).

55. Dell Products and Dell Inc. have had overlapping officers. For example, in a Second Amended and Restated Certificate of Formation for Dell Products dated January 27, 2020, Richard Rothberg was identified as General Counsel for Dell Products and Robert Potts was identified as Senior Vice President and Assistant Secretary. Mr. Rothberg's LinkedIn profile identifies him as General Counsel of Dell Inc. https://www.linkedin.com/in/richard-rothberg-99623645/ A Dell Inc. submission to the SEC dated May 31, 2019 identifies Robert Potts as Senior Vice President and Assistant Secretary at that time. https://www.sec.gov/Archives/edgar/data/1468666/000146866619000054/exhibit101q1fy200-0605.htm

56. On information and belief, Dell Inc. patent attorneys have been involved in prosecuting patent applications owned by Dell Products.

57. On information and belief, Chad Anson is a patent attorney who worked for Dell. Mr. Anson's LinkedIn profile states that he was "Legal Director, Intellectual Property / Patents" at "Dell Inc." where "he led a team that engages with all of Dell's development and technologist teams around the world to protect the inventions that matter most to Dell and its customers" and also "provided IP-related guidance across all of Dell's business units, and supported Dell's patent litigation activity." https://www.linkedin.com/in/chad-anson-2161452/

58. Mr. Anson has been identified as "Legal Director, Intellectual Property / Patents" for both Dell Inc. and Dell Products on patent applications owned by Dell Products.

59. For example, U.S. Patent Application No. 13/747,696 ("the '696 Application") is owned by Dell Products. Mr. Anson signed a Power of Attorney ("POA") dated September 24, 2012 that Dell Products filed with the '696 Application on January 23, 2013. In the "Title and Company" line in the POA signature block, Mr. Anson is identified as "Legal Director, Intellectual Property / Patents DELL INC."

60. As another example, U.S. Patent Application No. 13/839,873 ("the '873 Application") is owned by Dell Products. Mr. Anson signed a POA dated January 31, 2013 that Dell Products filed with the '873 Application on October 20, 2015. In the "Title and Company" line in the POA signature block, Mr. Anson is identified as "Legal Director, Intellectual Property / Patents Dell Products L.P."

61. Mr. Anson also signed POAs in U.S. Patent Application Nos. 15/226,023 and 15/872,969, both of which are owned by Dell Products. As detailed below, all four of the patent applications containing a POA signed by Mr. Anson cite to at least one of the LiTL patents (or their published applications) that LiTL asserts against Dell in this action.

62. On information and belief, Anthony Peterman is a patent attorney who works for Dell.

63. According to the State Bar of Texas website, Mr. Peterman is part of "Dell Inc. Legal Department." https://www.texasbar.com/AM/Template.cfm?Section=Find_A_Lawyer&template=/Customsource/MemberDirectory/MemberDirectoryDetail.cfm&ContactID=151600

64. According to Mr. Peterman's LinkedIn profile, he is currently "Vice President, IP & IP Litigation at Dell Technologies." https://www.linkedin.com/in/anthony-peterman-59b202.

65. Mr. Peterman signed a POA dated May 24, 2019 in U.S. Patent Application No. 16/422,842, which is owned by Dell Products. In the "Title" line in the POA signature block, Mr. Peterman is identified as "Director – Intellectual Property, Patents – Dell Products, LP."

66. Mr. Peterman also signed POAs in U.S. Patent Application Nos. 16/744,658 and 17/081,266, both of which are owned by Dell Products. As detailed below, all three of the patent applications containing a POA signed by Mr. Peterman cite to at least one of the LiTL patents (or their published applications) that LiTL asserts against Dell in this action.

67. Each of Dell's 10-K statements from 2017 through 2022 states: "The inventions claimed in our patents and patent applications cover aspects of our current and possible future computer system and software products, manufacturing processes, and related technologies."

68. On information and belief, Dell Products permits Dell Inc. to practice the subject matter claimed in the patents and patent applications owned by Dell Products.

69. On information and belief, Dell Inc. has prosecuted and is prosecuting patents and patent applications owned by Dell Products, including because: (1) Mr. Anson has been identified as an attorney for both Dell Inc. and Dell Products, and has been involved in prosecution of Dell's patent applications, including Dell patent applications that cite to LiTL's asserted patents or their published applications; (2) Mr. Peterman has been identified as an attorney for Dell Inc., Dell Technologies, and Dell Products, and has been involved in prosecution of Dell's patent applications, including Dell patent applications that cite to LiTL's asserted patents or their published applications; and (3) on information and belief, Dell Products has authorized Dell Inc. to practice its patents, including its patents directed to convertible devices such as the Accused Products.

Dell's Knowledge of the '688 Patent

70. On information and belief, Dell has known of the '688 patent since at least 2013.

71. The ’688 patent and its published application were cited during prosecution of several patents and patent applications owned by Dell Products that relate to Dell’s convertible devices.

The Dell ’873 Application

72. For example, on March 15, 2013, Dell Products filed U.S. Patent Application No. 13/839,873 (“the Dell ’873 Application”), entitled “Information Handling System Housing Lid With Synchronized Motion.”

73. The Dell ’873 Application is directed to a convertible laptop that “converts from a closed position to a table position by rotating a lid with a display 360 degrees about a hinge having synchronized and continuous motion.” Dell ’873 Application, Abstract.

74. The Dell ’873 Application depicts a convertible laptop in Figure 2A (closed configuration), Figure 2B (clamshell configuration), and Figure 2C (tablet configuration).

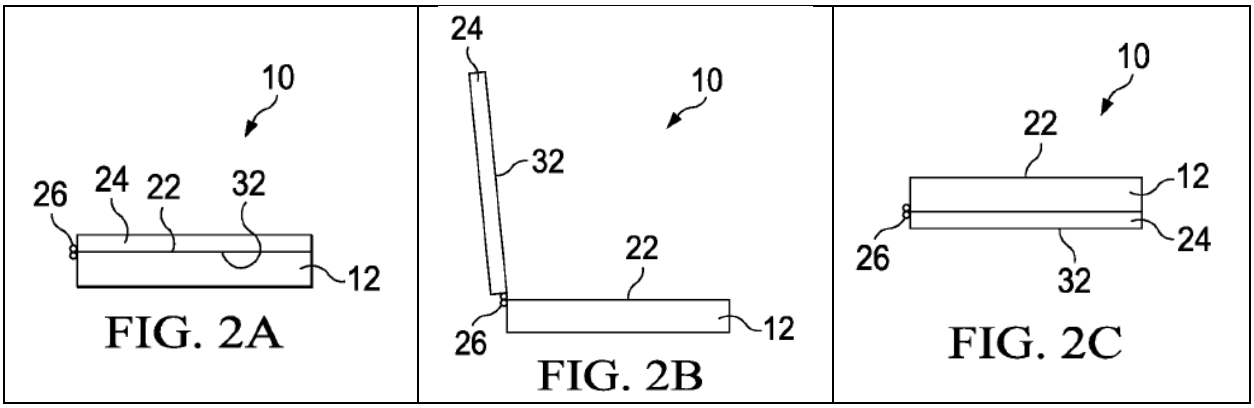

75. On March 27, 2013, Dell Products submitted an Information Disclosure Statement (“IDS”) that identifies four U.S. patents, the first of which is the ’688 patent.

76. On October 20, 2015, Dell Products filed a POA dated January 31, 2013 signed by Dell Inc.’s patent attorney, Mr. Anson.

77. On December 1, 2015, the Dell ’873 Application issued as U.S. Patent No. 9,201,465 (“the Dell ’465 patent”), which identifies the ’688 patent under the “References Cited” section.

The Dell ’023 Application

78. As another example, on August 2, 2016, Dell Products filed U.S. Patent Application No. 15/226,023 (“the Dell ’023 Application”), entitled “Antenna Solution For Narrow Bezel System.”

79. On August 2, 2016, Dell Products filed a POA signed by Dell Inc.’s patent attorney, Mr. Anson.

80. The Dell ’023 Application is directed to a convertible laptop that can be configured into closed, clamshell, tablet, stand and tent configurations by rotating a lid from 0 to 360 degrees. Dell ’023 Application, Specification [0038].

81. On October 5, 2017, the examiner rejected the pending claims as obvious and in the Notice of References Cited listed the ’688 patent along with five other prior art references.

Notice of References Cited	Application/Control No. 15/226,023	Applicant(s)/Patent Under Reexamination BOLOGNA ET AL.	
	Examiner HUEDUNG MANCUSO	Art Unit 2845	Page 1 of 1

U.S. PATENT DOCUMENTS

*		Document Number Country Code-Number-Kind Code	Date MM-YYYY	Name	CPC Classification	US Classification
*	A	US-6,829,140 B2	12-2004	Shimano; Kenji	G06F1/162	248/919
*	B	US-8,312,991 B2	11-2012	Diebel; Markus	A45C11/00	206/305
*	C	US-8,289,688 B2	10-2012	Behar; Yves	G06F1/162	361/679.27
*	D	US-2011/0260919 A1	10-2011	Montag; Bruce C.	H01Q3/24	342/374
*	E	US-8,896,487 B2	11-2014	Chiang; Bing	G06F1/1616	343/700MS
*	F	US-3,611,063 A	10-1971	Neale; Ronald George	H01L45/04	257/4
	G	US-				

82. On April 3, 2018, the Dell ’023 Application issued as U.S. Patent No. 9,935,357 (“the Dell ’357 patent”), which identifies the ’688 patent under the “References Cited” section.

The Dell ’969 Application

83. As another example, on January 16, 2018, Dell Products filed U.S. Patent Application No. 15/872,969 (“the Dell ’969 Application”), entitled “Method And Apparatus For An Accelerometer Assisted Control System For A Reconfigurable Antenna Communication Device.”

84. On January 16, 2018, Dell Products filed a POA signed by Dell Inc.’s patent attorney, Mr. Anson.

85. The Dell ’969 Application is directed to a convertible laptop that can be configured into at least four positions by rotating the display about the base, as depicted in Figure 3.

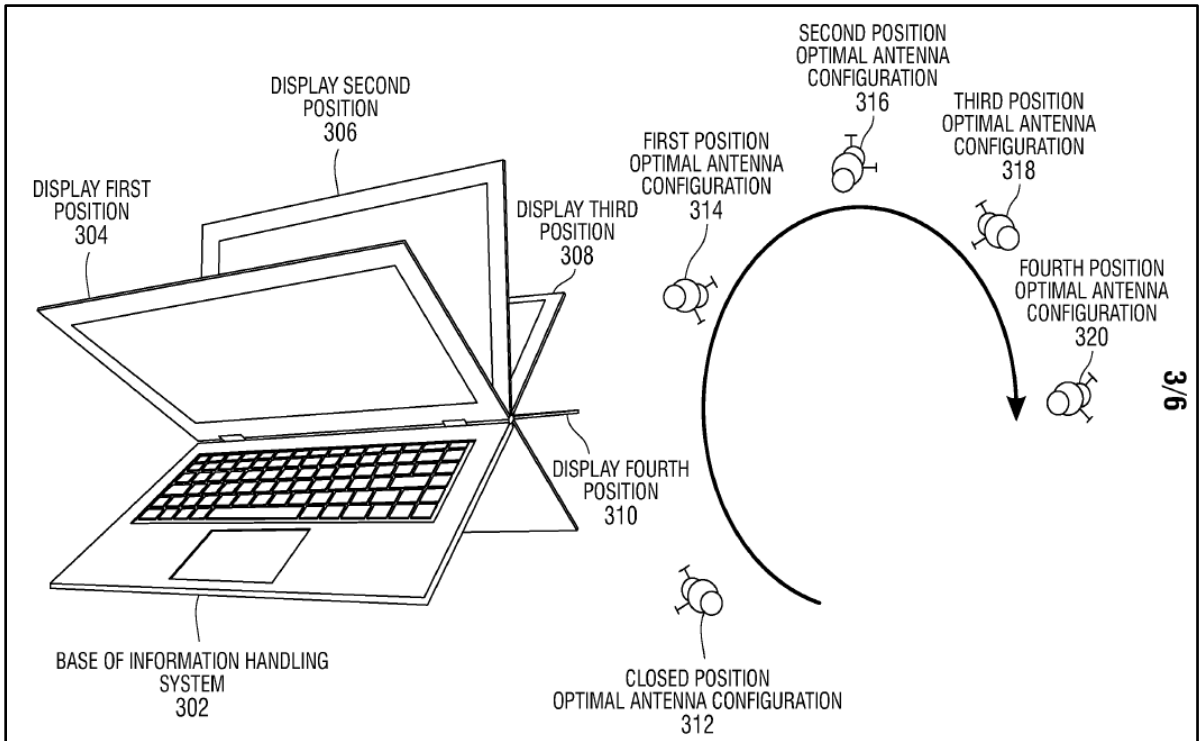

FIG. 3

86. On January 15, 2019, Dell Products submitted an IDS that identifies four U.S. patent documents, one of which is the ’688 patent.

87. On June 11, 2019, the Dell '969 Application issued as U.S. Patent No. 10,321,463 ("the Dell '463 patent"), which identifies the '688 patent under the "References Cited" section.

The Dell '842 Application

88. As another example, on May 24, 2019, Dell Products filed U.S. Patent Application No. 16/422,842 ("the Dell '842 Application"), entitled "Method And Apparatus For An Accelerometer Assisted Control System For A Reconfigurable Antenna Communication Device." The Dell '842 Application is a continuation of the Dell '969 Application, which is directed to a convertible laptop that can be configured into at least four positions by rotating the display about the base.

89. On May 24, 2019, Dell Products filed a POA signed by Dell Inc.'s patent attorney, Mr. Peterman.

90. Dell Products submitted as part of the initial application an IDS that identifies the '688 patent.

91. After filing a terminal disclaimer to overcome an obviousness-type double-patenting over the earlier-issued Dell '463 patent, the Dell '842 Application issued as U.S. Patent No. 10,736,118 ("the Dell '118 patent") on August 4, 2020, which identifies the '688 patent under the "References Cited" section.

The Dell '707 Application

92. As another example, on September 30, 2016, Dell Products filed U.S. Patent Application No. 15/282,707 ("the Dell '707 Application"), entitled "Systems And Methods For Mechanically Interfacing Camera To Hinge Of Information Handling System."

93. The Dell ’707 Application includes embodiments involving a convertible laptop that can be configured into clamshell or tablet configuration by rotating a lid from 0 to 360 degrees. Dell ’707 Application, Specification, p. 15.

94. On July 31, 2017, the examiner rejected the pending claims as obvious and in the Notice of References Cited listed U.S. Pub. No. 2009/0244832 (“the ’832 Publication”), which is the published application that matured into the ’688 patent.

95. On July 3, 2018, the Dell ’707 Application issued as U.S. Patent No. 10,013,031 (“the Dell ’031 patent”), which identifies the ’832 Publication under the “References Cited” section.

96. On information and belief, Dell Inc. and Dell Technologies Inc. became aware that the ’832 Publication matured into the ’688 patent before the filing of the Original Complaint given Dell’s substantial intellectual property department, Dell’s procedures for performing freedom-to-operate analyses, and the fact that Dell subsequently cited the ’688 patent in IDSs during prosecution of the Dell ’969 and ’842 Applications.

97. The ’688 patent was well-known to personal computing companies because the ’688 Patent and its published application are frequently cited during prosecution of patent applications owned by personal computing companies.

98. The ’688 patent and its corresponding published application have been cited at least 308 times in patents and patent applications assigned to major players in the personal computing space, as depicted below. Dell Inc. is in the list of assignees whose patents and patent applications have cited the ’688 patent and its published application.

Ultimate Parent of Assignee	**Citations to '688 Patent**	**Citations to '688 Published App.**	**Total Citations**
Microsoft Corp.	38	56	94
Apple Inc.	13	16	29
Intel Corp.	20	9	29
Google Inc.	14	2	16
Lenovo Group Ltd.	8	3	11
HP Inc.	6	2	8
Dell Inc.	4	2	6
ASUSTeK Computer Inc.	2	2	4
Other (excluding LiTL)	35	76	111
Total	140	168	308

99. On information and belief, Dell Inc. and Dell Technologies Inc. have known of the '688 patent since at least 2013 at least because: (1) Mr. Anson has been identified as an attorney for both Dell Inc. and Dell Products; (2) Mr. Peterman has been identified as an attorney for Dell Inc., Dell Technologies, and Dell Products; (3) during prosecution of the Dell '873 Application, Dell Products identified the '688 patent in an IDS filed in 2013, and Dell Inc.'s patent attorney, Mr. Anson, was involved in prosecution of the Dell '873 Application; (4) during prosecution of the Dell '023 Application, the '688 patent was cited in an Office Action in 2017, and Dell Inc.'s patent attorney, Mr. Anson, was involved in prosecution of the Dell '023 Application; (5) during prosecution of the Dell '969 Application, Dell Products cited the '688 patent in an IDS in 2019, and Dell Inc.'s patent attorney, Mr. Anson, was involved in prosecution of the Dell '969 Application; (6) during prosecution of the Dell '842 Application, Dell Products cited the '688 patent in an IDS in 2019, and Dell Inc.'s patent attorney, Mr. Peterman, was involved in prosecution of the Dell '842 Application; (7) during prosecution of the Dell '707 Application, the published application that matured into the '688 patent was cited in an Office Action in 2017; (8) the frequency with which the '688 patent, and related patents and patent application publications, has been cited by the USPTO during prosecution of patent

applications owned by major players in the personal computing space, including Dell, Inc.; (9) Dell Products is a wholly-owned subsidiary of Dell Inc. and the two entities have shared overlapping officers; (10) on information and belief (including Dell's 10-K statements), the subject matter disclosed in Dell's patents and patent applications relate to aspects of the Accused Products made and sold by Dell Inc.; and (11) on information and belief, Dell Products has authorized Dell Inc. to practice its patents, including its patents relating to 2-in-1 devices such as the Accused Products, which cite the '688 patent and its published application.

Dell's Knowledge of Infringement of the '688 Patent

100. As detailed in the foregoing subsections of this Amended Complaint entitled "Dell's Incorporation of LiTL's Patented Technologies into Its Computing Devices" (in the Factual Background) and "Dell's Direct Infringement" (in Count I), since at least 2017 (by which time Dell had knowledge of the '688 patent) the Accused Products have performed in a manner similar to the invention of claim 19 of the '688 patent, Dell has provided literature that teaches customers how to use the Accused Products in a manner similar to the invention of claim 19 of the '688 patent, and Dell has intended that the Accused Products perform in a manner similar to those of the invention of claim 19 of the '688 patent.

101. For example, since at least 2017 Dell has provided customers with literature that describes Accused Products (e.g., Inspiron 5368 2-in-1) with user modes that include a notebook mode, tent mode, and stand mode, which modes perform in a manner similar to the laptop mode, easel mode, and frame mode of claim 19 of the '688 patent, respectively.

Modes

Notebook

Stand

Tablet

Tent

https://dl.dell.com/topicspdf/inspiron-13-5368-2-in-1-laptop_setup-guide_en-us.pdf, pp. 13-14

Copyright © 2017 Dell Inc. or its subsidiaries. All rights reserved. Dell, EMC, and other trademarks are trademarks of Dell Inc. or its subsidiaries. Other trademarks may be trademarks of their respective owners.

2017-02

Rev. A02

https://dl.dell.com/topicspdf/inspiron-13-5368-2-in-1-laptop_setup-guide_en-us.pdf, p. 2

102. As another example, since at least 2017 Dell has touted the 2-in-1 capabilities of the Accused Products. For example, a 2017 article on Dell's website announced the launch of 2-

in-1 laptops under its XPS brand, noting that the new product line "delivers a satisfying experience in every operational mode," including the notebook mode, tent mode, and stand mode:

You Asked, We Listened – XPS 13 2-in-1 Now Adapted for Business

By Raza Haider | March 21, 2017

https://www.dell.com/en-us/blog/dell-xps-13-2-in-1-now-adapted-for-business/

103. Dell's product literature and marketing of its 2-in-1 devices – with operational modes that perform similar to the claimed laptop, easel, and frame modes – evidence Dell's intent that the Accused Products be used in a manner similar to and perform in a manner similar to the invention in claim 19 of the '688 patent.

Dell's Induced Infringement

104. On information and belief, Dell Inc. and Dell Technologies Inc. have known that the Accused Products infringe the '688 patent since at least 2017, by which time the Accused Products were being offered for sale, sold, imported, and used in the United States. *See*, *e.g.*, https://www.dell.com/en-us/blog/7-dell-products-named-2017-ces-innovation-award-honorees/.

105. Since at least 2017, Dell Inc. and Dell Technologies Inc. knew that the Accused Products infringe at least claim 19 of the '688 patent when used by customers or other users,

when imported by others, and when sold or offered for sale by Dell Inc. and resellers such as Best Buy.

106. Since at least 2017, Dell Technologies Inc. has induced infringement and continues to induce infringement by actively encouraging Dell Inc. to directly infringe at least claim 19 of the ’688 patent by facilitating Dell Inc.’s sales, offers for sale, and use of the Accused Products.

107. Since at least 2017, Dell Inc. has induced infringement and continues to induce infringement by actively encouraging resellers to directly infringe at least claim 19 of the ’688 patent by facilitating resellers’ sales and offers for sale of the Accused Products and by having the Accused Products manufactured and imported. On information and belief, Dell resellers include Best Buy. https://www.dell.com/en-us/lp/reseller_store_locator

108. Since at least 2017, Dell Inc. has induced infringement and continues to induce infringement by actively encouraging customers or other users to directly infringe at least claim 19 of the ’688 patent. Dell Inc. has provided with the Accused Products and on Dell’s website, user manuals, product documentation, and advertising materials that induce customers or others to use the Accused Products in a manner that infringes at least claim 19 of the ’688 patent. For example, Dell’s website touts the availability of four display modes on its Latitude, Inspiron, and XPS 2-in-1 notebooks. *E.g.*, https://dl.dell.com/content/manual29903967-latitude-5330-latitude-5330-2in1-setup-and-specifications.pdf (pp. 10-12); https://dl.dell.com/topicspdf/inspiron-13-7391-2-in-1-laptop_users-guide_en-us.pdf (pp. 9-10); and https://dl.dell.com/topicspdf/xps-13-7390-2-in-1-laptop_setup-guide_en-us.pdf (pp. 9-10).

Dell's Willful Infringement

109. Dell has willfully infringed at least claim 19 of the '688. Dell's offers for sale, sales, and uses of the Accused Products with provision of manuals and instruction to purchasers that encourage use it knows will infringe the '688 patent demonstrate the willful nature of Dell's infringement.

110. On information and belief, since at least 2017 Dell has had the specific intent to infringe claim 19 of the '688 patent because, as alleged above, since at least 2017 Dell knew of the '688 patent, encouraged its customers to use the Accused Devices in a manner that infringes claim 19 of the '688 patent, and knew that its customers actions would infringe claim 19 of the '688 patent.

111. According to job descriptions for positions for Dell intellectual property legal counsel, such attorneys provide "freedom-to-operate analysis." https://dell.talentify.io/job/legal-counsel-intellectual-property-ip-round-rock-texas-dell-r175339; https://www.legal.io/jobs/5197926/Intellectual-Property-IP-Attorney

112. In a statement that a Dell intellectual property attorney submitted to the USPTO on May 6, 2015, Dell stated that "Dell is a frequent customer of the USPTO." According to Dell's 2022 10-K statement, as of 2022, Dell "held a worldwide portfolio of 18,570 granted patents and 7,619 pending patent applications." https://investors.delltechnologies.com/static-files/e8323060-4838-4901-b341-e6798bd367fb, p. 11. According to a 2021 study, Dell obtained over 2,000 patents from the USPTO in 2021, placing it 16th on a list of organizations that receive the most U.S. utility patents. https://ipo.org/wp-content/uploads/2022/01/2021-Patent-300%C2%AE-IPO-Top-Patent-Owners-List-FINAL.pdf On information and belief, Dell's intellectual property department has a substantial head count and resources, which would be necessary to support Dell's substantial patent prosecution activities before the USPTO.

113. Given job descriptions for Dell's attorneys involving procedures for performing freedom-to-operate analyses, given Dell's substantial intellectual property department, and given Dell's knowledge of the '688 patent since at least 2013, if Dell did not investigate whether the Accused Products infringe the '688 patent, then Dell was willfully blind to a reasonable likelihood that the Accused Products infringe the '688 patent.

114. The foregoing description of Dell's infringement is based on publicly available information. LiTL reserves the right to modify this description, including, for example, on the basis of information about the Accused Products that it obtains during discovery.

115. LiTL has been and is being irreparably harmed, and has incurred and will continue to incur damages, as a result of Dell's infringement of the '688 patent.

116. Dell's infringement of the '688 patent has damaged and continues to damage LiTL in an amount yet to be determined, of no less than a reasonable royalty.

COUNT II

(Infringement of U.S. Patent No. 8,624,844)

117. LiTL incorporates by reference and realleges all the foregoing paragraphs of this First Amended Complaint as if fully set forth herein.

Dell's Direct Infringement

118. Dell has directly infringed and continues to directly infringe, literally and/or equivalently, one or more claims of the '844 patent, including at least claims 10 and 17, including by importing, using, selling, and offering for sale in the United States the Accused Products.

119. The Accused Products (*e.g.*, the Latitude 5330 2-in-1) are portable computers that are configurable between a plurality of display modes including a laptop mode and an easel mode wherein transitions between the plurality of display modes permit an operator to interact with a single display screen in each of the plurality of display modes. For example:

Laptop mode

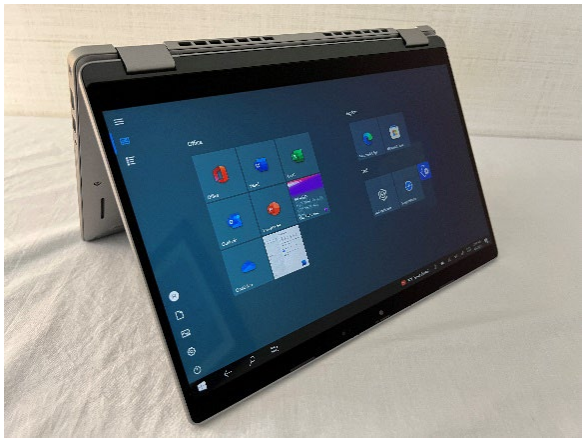

Easel mode

120. The Accused Products (*e.g.*, the Latitude 5330 2-in-1) are portable computers that include a base including a keyboard, a main display component rotatably coupled to the base and including the single display screen which displays content. For example:

121. The Accused Products (*e.g.*, the Latitude 5330 2-in-1) include a hinge assembly disposed at least partially within the base. For example:

See, e.g., Latitude 5330 2-in-1 Webpage.

122. The Accused Products (*e.g.*, the Latitude 5330 2-in-1) include a main display component that defines an axis of rotation about which both the base and the main display component are rotatable to transition the portable computer between at least the laptop mode and the easel mode, wherein the transition between the laptop mode and the easel mode allows the operator to operate the portable computer while viewing the single display screen in each of the plurality of display modes. For example:

Laptop mode

Easel mode

123. The Accused Products (*e.g.*, the Latitude 5330 2-in-1) include a laptop mode that is configured to display to a user on the main display component a first content mode having a first content display orientation with the main display component oriented towards the user and the keyboard oriented to receive input from the user. For example:

Laptop mode configured to display a first content mode

124. The Accused Products (*e.g.*, the Latitude 5330 2-in-1) include an easel mode that is configured to display to the user on the main display component a second content mode having a second content display orientation with the main display component oriented towards the user and the keyboard oriented away from the user. For example:

Easel mode configured to display a second content mode

125. The Accused Products (*e.g.*, the Latitude 5330 2-in-1) include first and second content display orientations that are 180 degrees relative to each other. For example:

Laptop mode displaying first content display orientation

Easel mode displaying second content display orientation

126. The Accused Products (*e.g.*, the Latitude 5330 2-in-1) include portable computers that are operable in the easel mode to enable the user to interact with displayed content without interacting with the keyboard. For example:

Easel mode

127. The Accused Products (*e.g.*, the Latitude 5330 2-in-1) include a navigation control accessible in each of the plurality of display modes and configured to permit a user to manipulate at least one of operating parameters of the portable computer and the content displayed on the single display screen. For example, the Latitude 5330 2-in-1 includes a touchscreen that is accessible in any mode.

> **Display**
> 2-in-1, 13.3" FHD (1920x1080) AG, Touch, WVA, 300 nit, HD Cam, WLAN, Pen support, Gorilla Glass

See, e.g., Latitude 5330 2-in-1 Webpage.

128. The Accused Products (*e.g.*, the Latitude 5330 2-in-1) include a plurality of modes that includes a frame mode in which the main display component is oriented towards the operator, the base contacts a substantially horizontal surface, and the keyboard faces the substantially horizontal surface.

Frame mode

129. The Accused Products (*e.g.*, the Latitude 5330 2-in-1) include an operating display mode which is selected from the plurality of display modes in response to operation of the navigation control. For example:

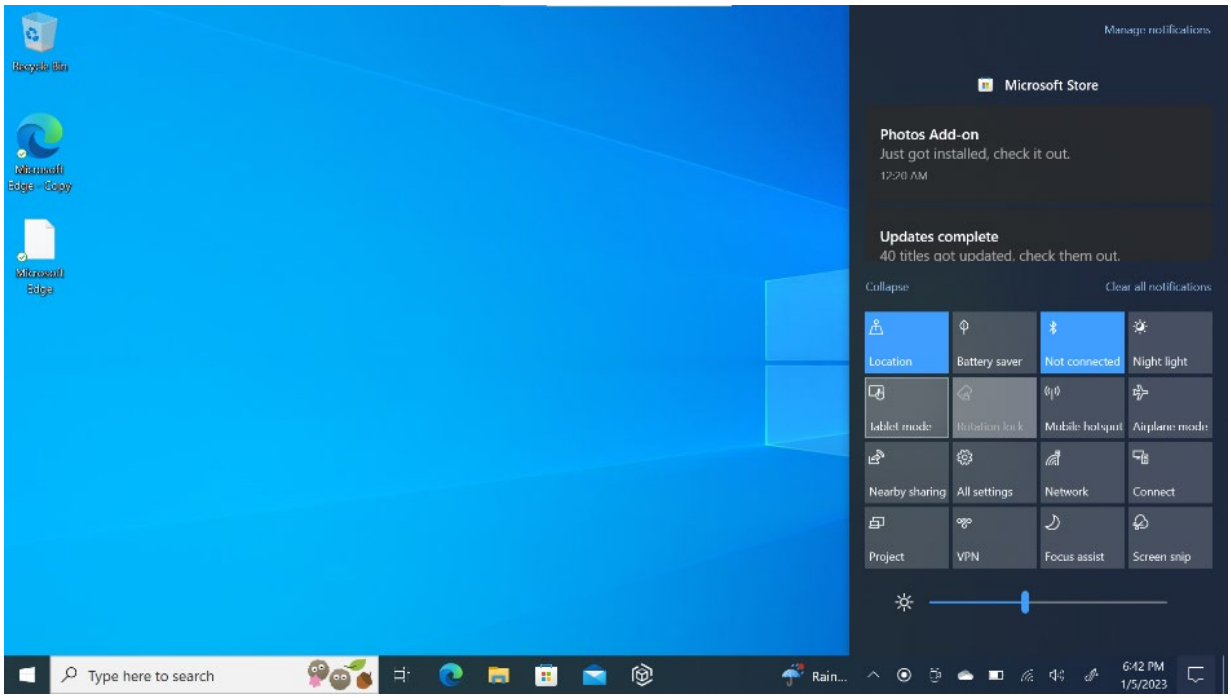

First operating display mode

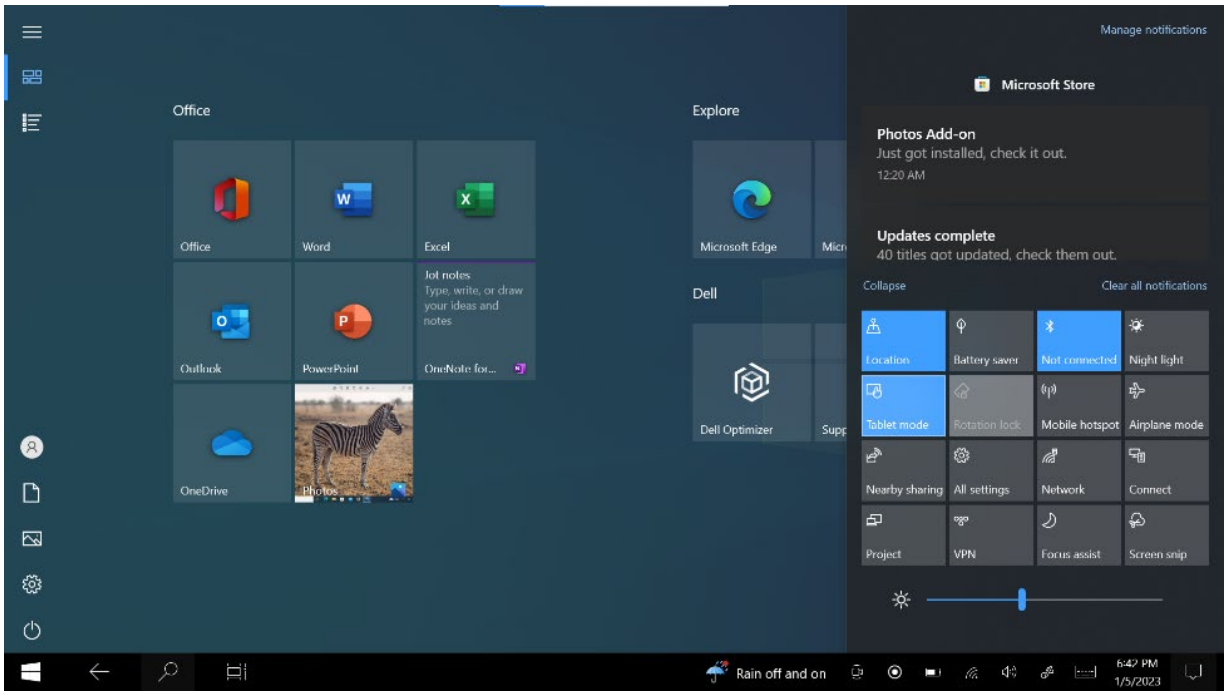

Second operating display mode

Dell's Knowledge of the '844 Patent

130. On information and belief, Dell knew of the '844 patent since at least 2017.

131. The '844 patent and its published application were cited during prosecution of several patent applications owned by Dell Products.

<u>The Dell '887 Application</u>

132. For example, on January 21, 2014, Dell Products filed U.S. Patent Application No. 14/159,887 ("the Dell '887 Application"), entitled "Convertible Information Handling System Input Device Surface and Support." The Dell '887 Application is directed to a convertible laptop that provides support in tablet and stand configurations. Dell '887 Application, Paragraphs [007]-[008].

133. On January 21, 2014, Dell Products filed a POA signed by Dell Inc.'s patent attorney, Mr. Anson.

134. In an office action dated February 25, 2016, the examiner rejected pending claim 6 as obvious over, inter alia, U.S. Pub. No. 2009/0244012 ("the '012 Publication"), which is the published application that matured into the '844 patent.

> 7) **Claim 6 is rejected under 35 U.S.C. 103 as being unpatentable over Whitt 2013/0228435 in view of Behar 2009/0244012**.
>
> Regarding **claim 6**, Whitt discloses the information handling system of claim 1 except for disclosing explicitly wherein the second position comprises a tablet stand configuration having the keyboard in contact with the support surface to hold the lid elevated relative to the chassis. Behar however teaches wherein a second position comprises a tablet stand configuration having a keyboard in contact with a support surface to hold a lid elevated relative to the chassis **(see Fig 26)**. It would have been obvious to one of ordinary skill in the art at the time the invention was made to modify the structure of Whitt to accomplish this configuration as shown by Behar since it was known in the art to allow for a clam shell position which is quite common in order to appease user preference with such devices hence enhancing functionality.

135. On May 18, 2016, Dell amended the pending claims and attempted to distinguish the prior art. On September 9, 2016, the examiner issued a final rejection that repeated the obviousness rejection of claim 6 based on Whitt and the '012 Publication. On September 28, 2016, Dell again attempted to distinguish the prior art. In a response dated September 27, 2016, the examiner stated that Dell's arguments were not persuasive.

136. On January 13, 2017, the examiner issued a Notice of Allowance ("NOA") that included an examiner's amendment. According to the NOA, during an interview on December 15, 2016, Dell had agreed to cancel claim 6, which stood rejected as obvious over Whitt and the '012 Publication.

137. The ’887 Application file wrapper includes the examiner’s search notes that bear a footer indicating they were printed on December 27, 2016. The search notes disclose that the examiner searched for the ’844 patent (search S44).

138. On May 23, 2017, the Dell ’887 Application issued as U.S. Patent No. 9,658,652, which identifies the ’844 patent under the “References Cited” section.

(56) **References Cited**

U.S. PATENT DOCUMENTS

8,390,255	B1 *	3/2013	Fathollahi	H02J 7/0045 206/308.3
8,624,844	B2 *	1/2014	Behar	G06F 1/162 345/168
8,724,302	B2 *	5/2014	Whitt, III	G06F 1/1618 361/679.09
8,803,816	B2 *	8/2014	Kilpatrick, II	G06F 1/1616 345/173
9,176,538	B2 *	11/2015	Boulanger	G06F 1/1684
9,223,344	B2 *	12/2015	Wang	G06F 1/1632
9,426,405	B2 *	8/2016	Sathya	H04N 5/602
2003/0142469	A1 *	7/2003	Ponx	G06F 1/1616 361/679.04
2009/0201254	A1 *	8/2009	Rais	G06F 1/1613 345/168
2012/0106047	A1 *	5/2012	Chu	G06F 1/166 361/679.01
2013/0154941	A1 *	6/2013	Moser	G06F 1/1626 345/168
2013/0194741	A1 *	8/2013	Uchiyama	G06F 1/1681 361/679.26
2013/0228435	A1 *	9/2013	Whitt, III	H01H 13/704 200/5 A
2013/0346636	A1 *	12/2013	Bathiche	G06F 13/102 710/8
2014/0160654	A1 *	6/2014	Yoo	G06F 1/1637 361/679.12
2014/0340840	A1 *	11/2014	Han	G06F 1/1632 361/679.43
2014/0376145	A1 *	12/2014	Zhang	G06F 1/1679 361/143
2015/0193009	A1 *	7/2015	Sharma	G06F 1/1616 345/169

* cited by examiner

The Dell ’696 Application

139. As another example, on January 23, 2013, Dell Products filed U.S. Patent Application No. 13/747,696 (“the Dell ’696 Application”), entitled “Articulating Information Handling System Housing Wireless Network Antennae Supporting Beamforming.”

140. On January 23, 2013, Dell Products filed a POA signed by Dell Inc.’s patent attorney, Mr. Anson, which identified Mr. Anson as “Legal Director, Intellectual Property / Patents DELL INC.”

141. The Dell ’696 Application is directed to a convertible laptop having antennae that can be used in clamshell or tablet configurations. Dell ’696 Application, Abstract.

142. Figure 2 of the Dell ’696 Application depicts a convertible laptop in multiple configurations.

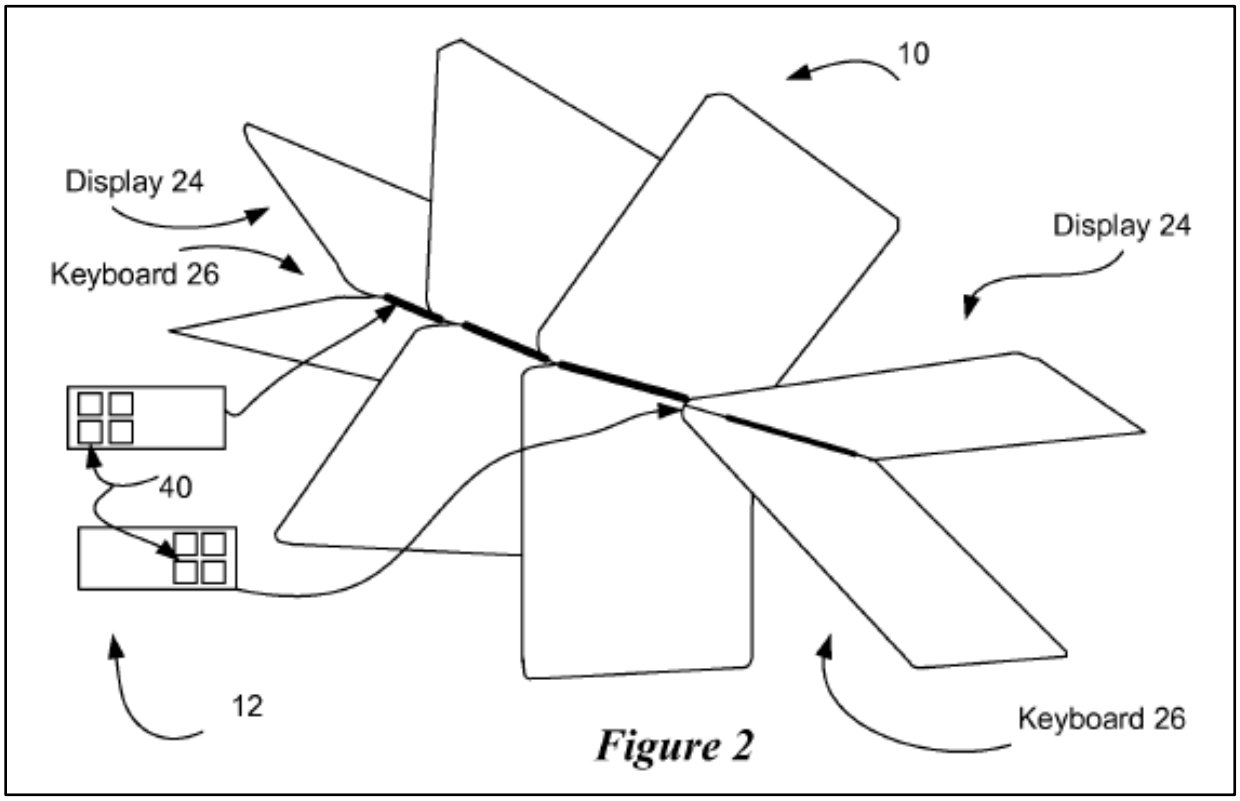

Figure 2

143. In an office action dated October 13, 2017, the examiner rejected pending claim 3 as obvious over several references including U.S. Pub. No. 2009/0244012 ("the '012 Publication"), which is the published application that matured into the '844 patent. The examiner stated that "Behar [the '012 Publication] teaches an accelerometer is a known configuration detector for determining the configuration between a display portion and a main portion of an information handling system (Fig. 4; ¶60, lines 4-10).

144. On July 24, 2018, the Dell '696 Application issued as U.S. Patent No. 10,033,087 ("the Dell '087 patent"), which identifies the '012 Publication under the "References Cited" section.

145. On information and belief, Dell Inc. and Dell Technologies Inc. became aware that the '012 Publication matured into the '844 patent before the filing of the Original Complaint given that the '844 patent was cited on the face of Dell's U.S. Patent No. 9,658,652 after the '012 Publication was applied as the basis of an obvious rejection during the prosecution of that patent, and given Dell's substantial intellectual property department and Dell's procedures for performing freedom-to-operate analyses.

<u>The Dell '658 Application</u>

146. As another example, on January 16, 2020, Dell Products filed U.S. Patent Application No. 16/744,658 ("the Dell '658 Application"), entitled "Managing Peripherals Of A Dual-Body Information Handling System."

147. On January 16, 2020, Dell Products filed a POA signed by Dell Inc.'s patent attorney, Mr. Peterman.

148. The Dell '658 Application is directed to a convertible laptop (which Dell calls a "dual-body information handling system") capable of "identifying contextual data associated

with contextual inputs … the contextual data including i) a hinge angle … and ii) a posture mode." Dell '658 Application, Specification, [0004]. Paragraph [0006] of the specification further states that "identifying contextual data includes identifying the posture mode of the dual-body information handling system from a table-top posture mode, a book posture mode, and a tent posture mode." Figures 5, 6, and 7 depict the table-top posture mode, book posture mode, and tent posture mode, respectively. Dell '658 Application, Specification, [0012]-[0014].

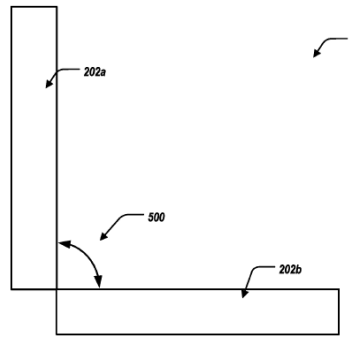 FIG. 5	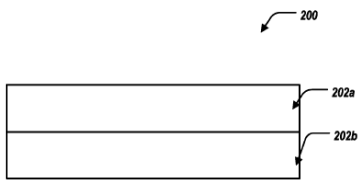 FIG. 6	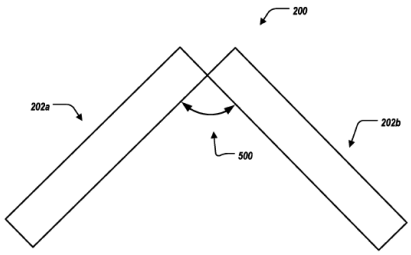 FIG. 7
Table-top posture mode	Book posture mode	Tent posture mode

149. In an office action dated October 16, 2020, the examiner rejected several pending claims as obvious over several references including the '012 Publication.

150. In a response dated January 13, 2021, Dell Products cancelled the claims rejected based on the '012 Publication.

151. On June 8, 2021, the Dell '658 Application issued as U.S. Patent No. 11,029,771 ("the Dell '771 patent"), which identifies the '012 Publication under the "References Cited" section with an asterisk to indicate that it was cited by the examiner.

152. The '844 patent and its corresponding published application have been cited at least 120 times in patents or patent applications assigned to major players in the personal computing space. Dell Inc. is in the list of assignees whose patents and patent applications have cited the '844 patent and its published application.

Ultimate Parent of Assignee	**Citations to '844 Patent**	**Citations to '844 Published App.**	**Total Citations**
Microsoft Corp.	16	1	17
Samsung Elec. Co. Ltd.	7	7	14
Apple Inc.	0	12	12
Lenovo Group Ltd.	1	8	9
Google Inc.	3	5	8
Dell Inc.	2	2	4
Intel Corp.	2	2	4
Toshiba Corp.	0	6	6
Other (excluding LiTL)	20	26	46
Total	51	69	120

153. On information and belief, Dell Inc. and Dell Technologies Inc. became aware that the '012 Publication matured into the '844 patent before the filing of the Original Complaint given that the '844 patent was searched by the examiner during prosecution of the Dell '887 Application and was cited on the face of the Dell patent that issued from that application, the frequency with which the '844 patent and its published application, has been cited by the USPTO during prosecution of patent applications owned by major players in the personal computing space (including Dell Inc.), Dell's substantial intellectual property department, and given job descriptions for Dell's attorneys involving procedures for performing freedom-to-operate analyses.

154. On information and belief, Dell Inc. and Dell Technologies Inc. have known of the '844 patent since at least 2017 at least because: (1) Mr. Anson has been identified as an attorney for both Dell Inc. and Dell Products; (2) Mr. Peterman has been identified as an attorney for Dell Inc., Dell Technologies, and Dell Products; (3) the '844 patent is listed on the face of the Dell '652 patent that issued in May 2017, (4) during prosecution of the Dell '887 Application, the USPTO search results in the file wrapper disclose that the examiner searched for the '844 patent, (5) Dell Inc.'s patent attorney, Mr. Anson, was involved in prosecution of the Dell '887

Application, which issued as the Dell ’652 patent, (6) during prosecution of the Dell ’696 Application, the ’012 Publication was cited in an Office Action in 2017, and Dell Inc.’s patent attorney, Mr. Anson, was involved in prosecution of the Dell ’696 Application; (7) during prosecution of the Dell ’658 Application, the ’012 Publication was cited in an Office Action in 2020, and Dell Inc.’s patent attorney, Mr. Peterman, was involved in prosecution of the Dell ’658 Application; (8) the frequency with which the ’844 patent, and related patents and patent application publications, has been cited by the USPTO during prosecution of patent applications owned by major players in the personal computing space, including Dell, Inc.; (9) Dell Products is a wholly-owned subsidiary of Dell Inc. and the two entities have shared overlapping officers; (10) on information and belief (including Dell’s 10-K statements), the subject matter disclosed in Dell’s patents and patent applications relate to aspects of the Accused Products made and sold by Dell Inc.; (11) on information and belief, Dell Products has authorized Dell Inc. to practice its patents, including its patents relating to convertible devices such as the Accused Products, which cite the ’012 Publication; and (12) on information and belief, before the filing of the Original Complaint Dell Inc. and Dell Technologies Inc. were aware that the ’012 Publication matured into the ’844 patent.

Dell’s Knowledge of Infringement of the ’844 Patent

155. As detailed in the foregoing subsections of this Amended Complaint entitled “Dell’s Incorporation of LiTL’s Patented Technologies into Its Computing Devices” (in the Factual Background) and “Dell’s Direct Infringement” (in Count II), since at least 2017 (by which time Dell had knowledge of the ’844 patent) the Accused Products have performed in a manner similar to the invention of claims 10 and 17 of the ’844 patent, Dell has provided literature that teaches customers how to use the Accused Products in a manner similar to the invention of claims 10 and 17 of the ’844 patent, and Dell has intended that the Accused

Products perform in a manner similar to those of the invention of claims 10 and 17 of the ’844 patent.

156. For example, since at least 2017 Dell has provided customers with literature that describes Accused Products (e.g., Inspiron 5368 2-in-1) with user modes that include a notebook mode and a tent mode, which modes perform in a manner similar to the laptop mode and easel mode of claims 10 and 17 of the ’844 patent, respectively.

Modes

Notebook

Tent

https://dl.dell.com/topicspdf/inspiron-13-5368-2-in-1-laptop_setup-guide_en-us.pdf, pp. 13-14

Copyright © 2017 Dell Inc. or its subsidiaries. All rights reserved. Dell, EMC, and other trademarks are trademarks of Dell Inc. or its subsidiaries. Other trademarks may be trademarks of their respective owners.

2017-02

Rev. A02

https://dl.dell.com/topicspdf/inspiron-13-5368-2-in-1-laptop_setup-guide_en-us.pdf, p. 2

157. As another example, since at least 2017 Dell has touted the 2-in-1 capabilities of the Accused Products. For example, a 2017 article on Dell’s website announced the launch of 2-in-1 laptops under its XPS brand, noting that the new product line “delivers a satisfying

experience in every operational mode," including the notebook mode and tent mode:

You Asked, We Listened – XPS 13 2-in-1 Now Adapted for Business

By Raza Haider | March 21, 2017

https://www.dell.com/en-us/blog/dell-xps-13-2-in-1-now-adapted-for-business/

158. Dell's product literature and marketing of its 2-in-1 devices – with operational modes that perform similar to the claimed laptop and easel modes – evidence Dell's intent that the Accused Products be used in a manner similar to and perform in a manner similar to the invention in claim 10 of the '844 patent.

Dell's Induced Infringement

159. On information and belief, Dell Inc. and Dell Technologies Inc. have known that the Accused Products infringe the '844 patent since at least 2017, by which time the Accused Products were being offered for sale, sold, imported, and used in the United States.

160. Since at least 2017, Dell Inc. and Dell Technologies Inc. knew that the Accused Products infringe at least claims 10 and 17 of the '844 patent when used by customers or other users, when imported by others, and when sold or offered for sale by Dell Inc. and resellers such as Best Buy.

161. Since at least 2017, Dell Technologies Inc. has induced infringement and continues to induce infringement by actively encouraging Dell Inc. to directly infringe at least claims 10 and 17 of the '844 patent by facilitating Dell Inc.'s sales, offers for sale, and use of the Accused Products.

162. Since at least 2017, Dell Inc. has induced infringement and continues to induce infringement by actively encouraging resellers to directly infringe at least claims 10 and 17 of the '844 patent by facilitating resellers' sales and offers for sale of the Accused Products and by having the Accused Products manufactured and imported. On information and belief, Dell resellers include Best Buy. https://www.dell.com/en-us/lp/reseller_store_locator

163. Since at least 2017, Dell Inc. has induced infringement and continues to induce infringement by actively encouraging customers or other users to directly infringe at least claims 10 and 17 of the '844 patent. Dell Inc. has provided with the Accused Products and on Dell's website, user manuals, product documentation, and advertising materials that induce customers or others to use the Accused Products in a manner that infringes at least claims 10 and 17 of the '844 patent. For example, Dell's website touts the availability of four display modes on its Latitude, Inspiron, and XPS 2-in-1 notebooks. *E.g.*, https://dl.dell.com/content/manual29903967-latitude-5330-latitude-5330-2in1-setup-and-specifications.pdf (pp. 10-12); https://dl.dell.com/topicspdf/inspiron-13-7391-2-in-1-laptop_users-guide_en-us.pdf (pp. 9-10); and https://dl.dell.com/topicspdf/xps-13-7390-2-in-1-laptop_setup-guide_en-us.pdf (pp. 9-10).

Dell's Willful Infringement

164. Dell has willfully infringed at least claims 10 and 17 of the '844 patent. Dell's offers for sale, sales, and uses of the Accused Products with provision of manuals and instruction

to purchasers that encourage use it knows will infringe the ’844 patent demonstrates the willful nature of Dell’s infringement.

165. On information and belief, since at least 2017 Dell has had the specific intent to infringe claims 10 and 17 of the ’844 patent because, as alleged above, since at least 2017 Dell knew of the ’844 patent, encouraged its customers to use the Accused Devices in a manner that infringes claims 10 and 17 of the ’844 patent, and knew that its customers actions would infringe claims 10 and 17 of the ’844 patent.

166. On information and belief, as alleged above, Dell’s intellectual property department performs freedom-to-operate analyses and has a substantial head count and resources.

167. On information and belief, given job descriptions for Dell’s attorneys involving procedures for performing freedom-to-operate analyses, given Dell’s substantial intellectual property department, and given Dell’s knowledge of the ’688 patent and the related ’844 patent since before the filing of the Original Complaint, if Dell did not investigate whether the Accused Products infringe the ’844 patent, then Dell was willfully blind to a reasonable likelihood that the Accused Products infringe the ’844 patent.

168. The foregoing description of Dell’s infringement is based on publicly available information. LiTL reserves the right to modify this description, including, for example, on the basis of information about the Accused Products that it obtains during discovery.

169. LiTL has been and is being irreparably harmed, and has incurred and will continue to incur damages, as a result of Dell’s infringement of the ’844 patent.

170. Dell’s infringement of the ’844 patent has damaged and continues to damage LiTL in an amount yet to be determined, of no less than a reasonable royalty.

COUNT III

(Infringement of U.S. Patent No. 9,563,229)

171. LiTL incorporates by reference and realleges all the foregoing paragraphs of the First Amended Complaint as if fully set forth herein.

Dell's Direct Infringement

172. Dell has directly infringed and continues to directly infringe, literally and/or equivalently, one or more claims of the '229 patent, including at least claim 1, including by importing, using, selling, and offering for sale in the United States the Accused Products.

173. The Accused Products (*e.g.*, the Latitude 5330 2-in-1) are portable computers that are configurable between a plurality of display modes including at least a laptop mode, a frame mode, and an easel mode. For example:

Laptop mode

Frame mode

Easel mode

174. The Accused Products (*e.g.*, the Latitude 5330 2-in-1) are portable computers comprising a display component and a base. For example:

175. The Accused Products (*e.g.*, the Latitude 5330 2-in-1) include an accelerometer configured to generate orientation information indicative of a current display mode among the plurality of display modes of the portable computer. For example:

Table 22. Sensor

Sensor support
Ambient Light Sensor on the hinge-up (optional)
P-sensor on the hinge-up (optional)
1 Accelerometer in the base (system board) for both Clamshell and 2-in-1
1 Accelerometer (Accelerometer + Gyro) in the hinge-up sensor board (Upsell on clamshell with Proximity/ALS/IR camera and 100% attached on 2-in-1)

See, e.g., Latitude 5330 2-in-1 Specifications, p. 23.

176. The Accused Products (*e.g.*, the Latitude 5330 2-in-1) include a display manager configured to display computer content on the display component and vary the computer content displayed responsive to the orientation information indicating a transition between at least the laptop and easel modes. For example:

Display content in laptop mode

Display content in easel mode

177. The Accused Products (*e.g.*, the Latitude 5330 2-in-1) include a display manager configured to enlarge the computer content displayed on the display component responsive to a transition from the laptop mode to the easel mode. For example:

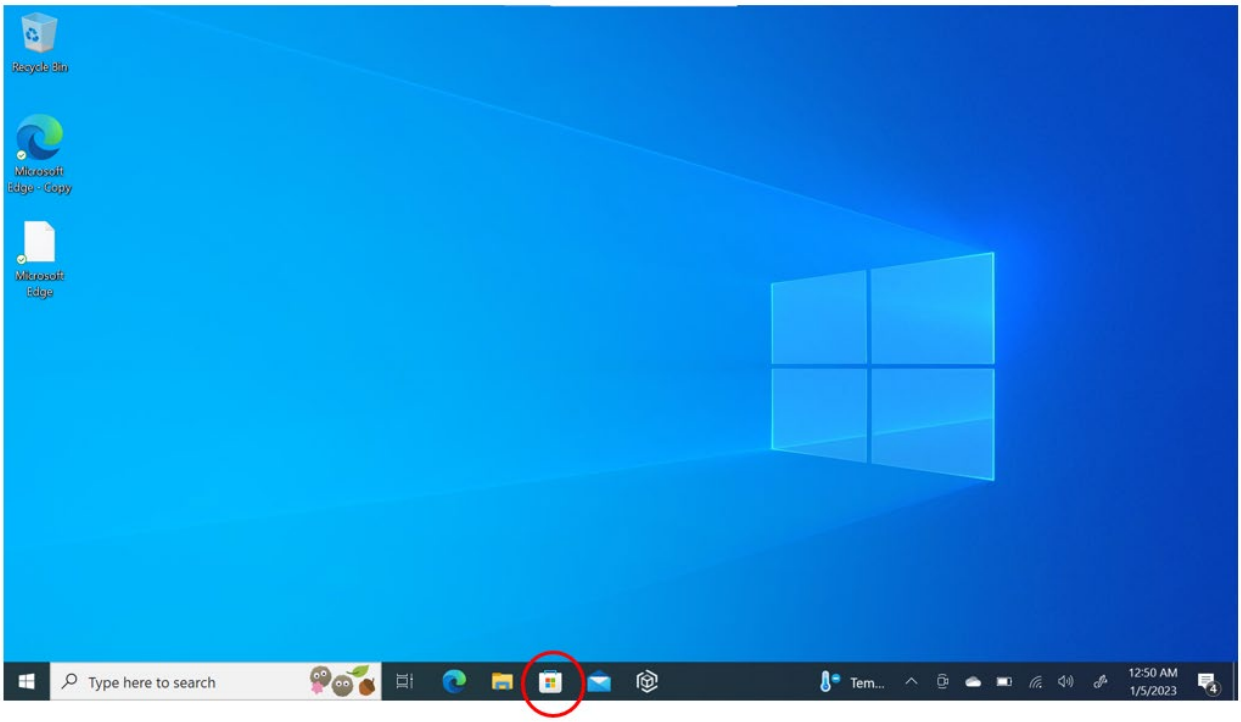

Computer content displayed in laptop mode

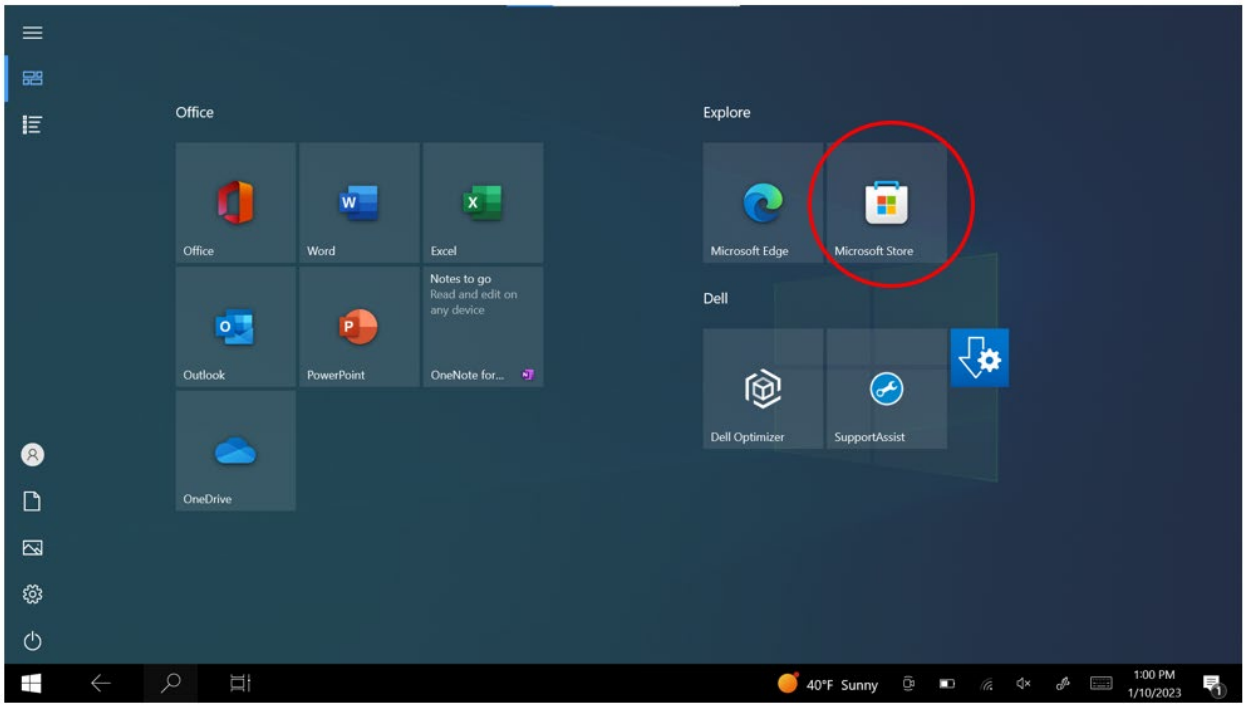

Computer content displayed in easel mode

178. The Accused Products (*e.g.*, the Latitude 5330 2-in-1) include an interface between the display component and the base defining a longitudinal axis running along the display component and the base about which the display component and the base are rotatable. For example:

See, e.g., Latitude 5330 2-in-1 Webpage.

Computer rotated along longitudinal axis

179. The Accused Products (*e.g.*, the Latitude 5330 2-in-1) include an interface constructed and arranged such that rotating either the display component or the base about the longitudinal axis up to approximately 180 degrees from a closed mode configures the portable computer into the laptop mode. For example:

Laptop mode at approximately 180 degrees

180. The Accused Products (*e.g.*, the Latitude 5330 2-in-1) include an interface with the laptop mode having a display component oriented towards an operator and a keyboard disposed within the base oriented to receive input from the operator. For example:

Laptop mode

181. The Accused Products (*e.g.*, the Latitude 5330 2-in-1) include an interface constructed and arranged such that rotating either the display component or the base about the longitudinal axis beyond approximately 270 degrees from the closed mode transitions the portable computer for viewing in the frame mode or the easel mode. For example:

Frame mode

Easel mode

182. The Accused Products (*e.g.*, the Latitude 5330 2-in-1) include an interface with the display component positioned toward the operator in frame mode, while the base contacts a substantially horizontal surface, and the keyboard is directed towards the substantially horizontal surface. For example:

Frame mode

183. The Accused Products (*e.g.*, the Latitude 5330 2-in-1) include an interface with the display component positioned toward the operator in easel mode, with the keyboard oriented away from the operator. For example:

Easel mode

184. The Accused Products (*e.g.*, the Latitude 5330 2-in-1) comprise a portable computer configured to detect a transition to at least the easel mode and the frame mode based on the orientation information, automatically determine a display orientation of content, and disable the keyboard when the portable computer is in the frame mode. For example:

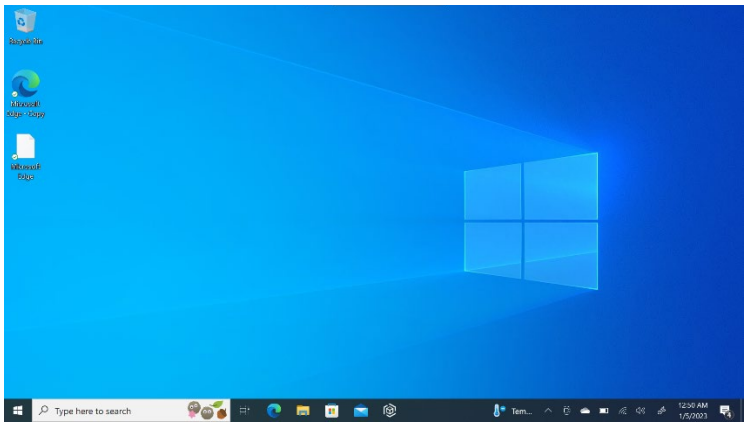

Laptop mode display orientation

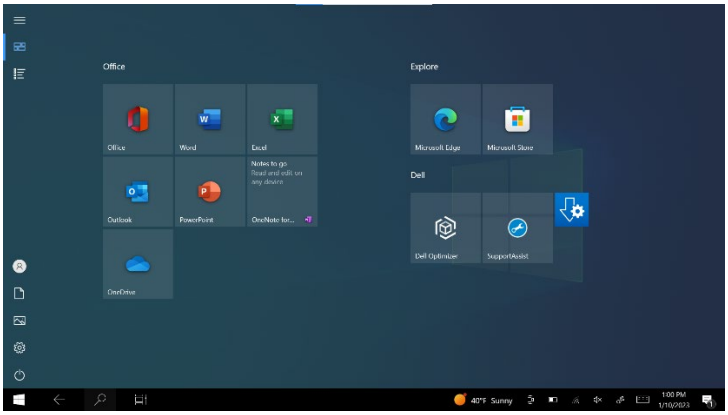

Frame/easel mode display orientation

When you open your 2-in-1 laptop screen more than 225 degrees the Keyboard and Touchpad are disabled by default.

See, e.g., Dell 2-in-1 Tablet Mode Support.

Dell's Knowledge of the '229 Patent

185. On information and belief, Dell knew of the '229 patent before the filing of the Original Complaint.

186. The '229 patent was cited during prosecution of a patent application owned by Dell Products that relates to Dell's convertible devices.

The Dell ’266 Application

187. For example, on October 27, 2020, Dell Products filed U.S. Patent Application No. 17/081,266 (“the Dell ’266 Application”), entitled “Information Handling System Transparent OLED Display And Method Of Control Thereof.”

188. On October 27, 2020, Dell Products filed a POA signed by Dell Inc.’s patent attorney, Mr. Peterman.

189. The Dell ’266 Application discusses problems associated with convertible laptops having clamshell and tablet configurations. Dell ’266 Application, Specification, [003].

190. On July 22, 2022, the examiner rejected the pending claims as anticipated and obvious, and in the Notice of References Cited listed the ’229 patent along with five other prior art references.

191. On information and belief, Dell’s knowledge of the ’688 patent by at least 2013 would have caused Dell to investigate, become aware of, and consider LiTL’s related patents, including the ’229 patent, before the filing of the Original Complaint.

192. On information and belief, Dell Inc. and Dell Technologies Inc. have known of the ’229 patent since before the filing of the Original Complaint at least because: (1) Mr. Peterman has been identified as an attorney for Dell Inc., Dell Technologies, and Dell Products; (2) during prosecution of the Dell ’266 Application, the ’229 patent was cited in an Office Action in 2022, and Dell Inc.’s patent attorney, Mr. Peterman, was involved in prosecution of the Dell ’266 Application; (3) Dell Products is a wholly-owned subsidiary of Dell Inc. and the two entities have shared overlapping officers; (4) on information and belief (including Dell’s 10-K statements), the subject matter disclosed in Dell’s patents and patent applications relate to aspects of the Accused Products made and sold by Dell Inc.; and (5) on information and belief,

Dell Products has authorized Dell Inc. to practice its patents, including its patents relating to convertible devices such as the Accused Products, which cite the ’229 patent.

Dell’s Induced Infringement

193. On information and belief, since at least the filing of the Original Complaint Dell Inc. and Dell Technologies Inc. knew that the Accused Products infringe the ’229 patent.

194. On information and belief, since at least the filing of the Original Complaint Dell Inc. and Dell Technologies Inc. knew that the Accused Products infringe at least claim 1 of the ’229 patent when used by customers or other users, when imported by others, and when sold or offered for sale by Dell Inc. and by resellers such as Best Buy.

195. Since at least the filing of the Original Complaint, Dell Technologies Inc. has induced infringement and continues to induce infringement by actively encouraging Dell Inc. to directly infringe at least claim 1 of the ’229 patent by facilitating Dell Inc.’s sales, offers for sale, and use of the Accused Products.

196. Since at least the filing of the Original Complaint, Dell Inc. has induced infringement and continues to induce infringement by actively encouraging resellers to directly infringe at least claim 1 of the ’229 patent by facilitating resellers’ sales and offers for sale of the Accused Products and by having the Accused Products manufactured and imported. On information and belief, Dell resellers include Best Buy. https://www.dell.com/en-us/lp/reseller_store_locator

197. Since at least the filing of the Original Complaint, Dell Inc. has induced infringement and continues to induce infringement by actively encouraging customers or other users to directly infringe at least claim 1 of the ’229 patent. Dell Inc. has provided with the Accused Products and on Dell’s website, user manuals, product documentation, and advertising

materials that induce customers or others to use the Accused Products in a manner that infringes at least claim 1 of the ’229 patent. For example, Dell’s website touts the availability of four display modes on its Latitude, Inspiron, and XPS 2-in-1 notebooks. *E.g.*, https://dl.dell.com/content/manual29903967-latitude-5330-latitude-5330-2in1-setup-and-specifications.pdf (pp. 10-12); https://dl.dell.com/topicspdf/inspiron-13-7391-2-in-1-laptop_users-guide_en-us.pdf (pp. 9-10); and https://dl.dell.com/topicspdf/xps-13-7390-2-in-1-laptop_setup-guide_en-us.pdf (pp. 9-10).

Dell’s Infringement

198. The foregoing description of Dell’s infringement is based on publicly available information. LiTL reserves the right to modify this description, including, for example, on the basis of information about the Accused Products that it obtains during discovery.

199. LiTL has been and is being irreparably harmed, and has incurred and will continue to incur damages, as a result of Dell’s infringement of the ’229 patent.

200. Dell’s infringement of the ’229 patent has damaged and continues to damage LiTL in an amount yet to be determined, of no less than a reasonable royalty.

COUNT IV

(Infringement of U.S. Patent No. 10,289,154)

201. LiTL incorporates by reference and realleges all the foregoing paragraphs of the First Amended Complaint as if fully set forth herein.

Dell’s Direct Infringement

202. Dell has directly infringed and continues to directly infringe, literally and/or equivalently, one or more claims of the ’154 patent, including at least claim 1, including by importing, using, selling, and offering for sale in the United States the Accused Products.

203. The Accused Products (*e.g.*, the Latitude 5330 2-in-1) are portable computers configurable between a plurality of display modes comprising a first mode and a second mode. For example:

First mode

Second mode

204. The Accused Products (*e.g.*, the Latitude 5330 2-in-1) include a display component comprising a display screen and a base comprising a keyboard and a touchpad. For example:

205. The Accused Products (*e.g.*, the Latitude 5330 2-in-1) include a hinge assembly that rotatably couples the base to the display component, the hinge assembly being configured to permit the display component to rotate relative to the base up to at least 270 degrees from a closed position where the display screen faces the keyboard. For example:

See, e.g., Latitude 5330 2-in-1 Webpage.

206. The Accused Products (*e.g.*, the Latitude 5330 2-in-1) include an orientation sensor configured to generate orientation information indicative of an orientation of at least part of the portable computer. For example:

Table 22. Sensor

Sensor support
Ambient Light Sensor on the hinge-up (optional)
P-sensor on the hinge-up (optional)
1 Accelerometer in the base (system board) for both Clamshell and 2-in-1
1 Accelerometer (Accelerometer + Gyro) in the hinge-up sensor board (Upsell on clamshell with Proximity/ALS/IR camera and 100% attached on 2-in-1)

See, e.g., Latitude 5330 2-in-1 Specifications, p. 23.

207. The Accused Products (*e.g.*, the Latitude 5330 2-in-1) include a display manager configured to detect a current display mode from among the plurality of display modes based at least in part on the orientation information and enlarge at least some computer content displayed on the display screen when the current display mode transitions from the first mode to the second mode. For example:

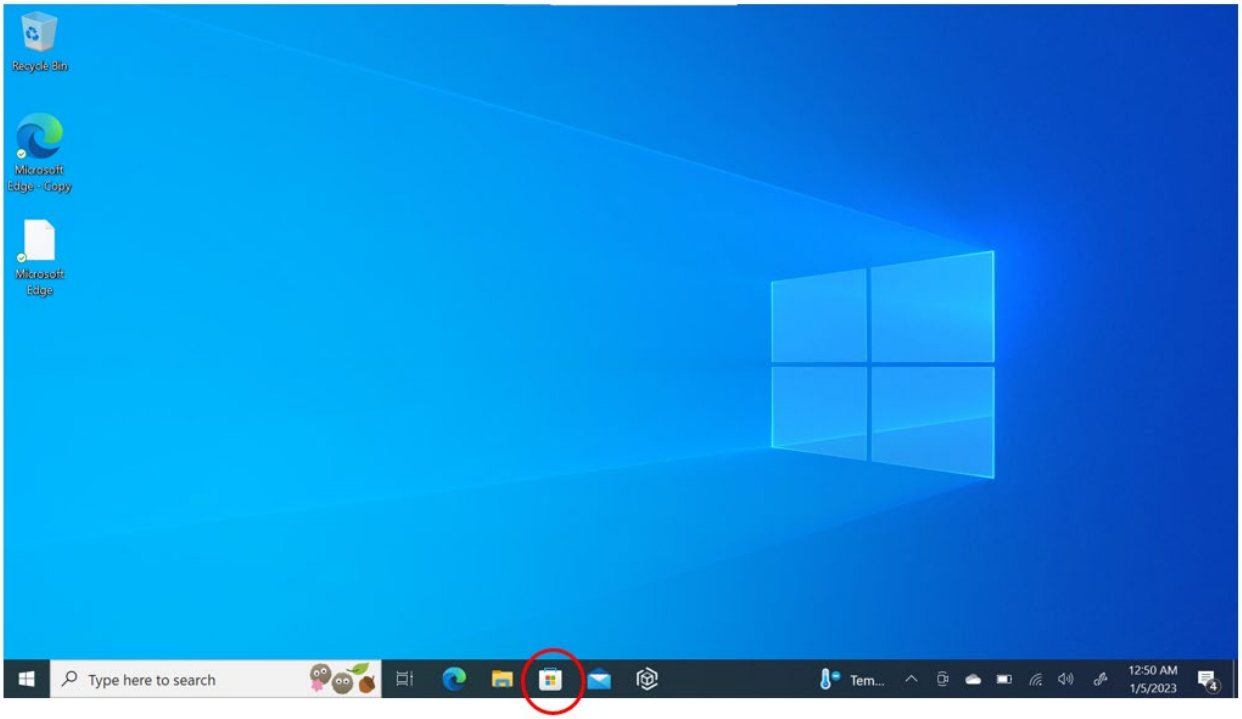

Computer content displayed in first mode

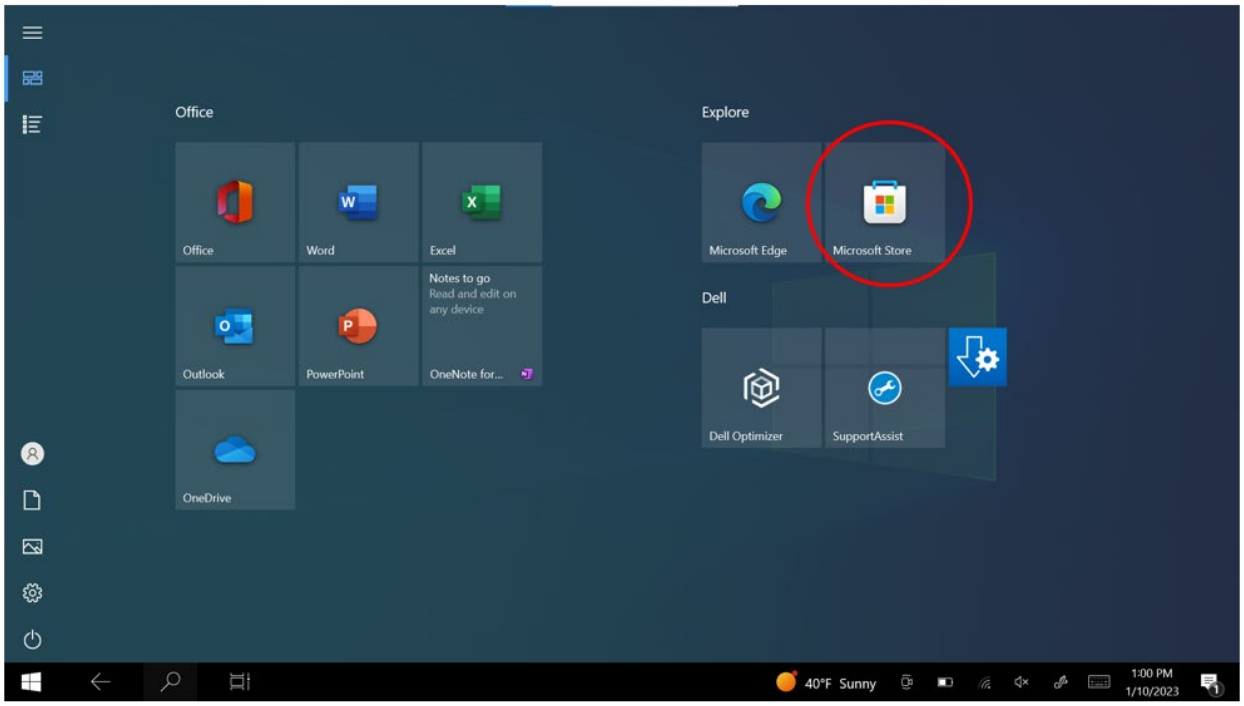

Computer content displayed in second mode

208. The Accused Products (*e.g.*, the Latitude 5330 2-in-1) include a display component in a first position, relative to the base in the first mode, and a second position relative to the base that is different from the first position in the second mode. For example:

First position in first mode

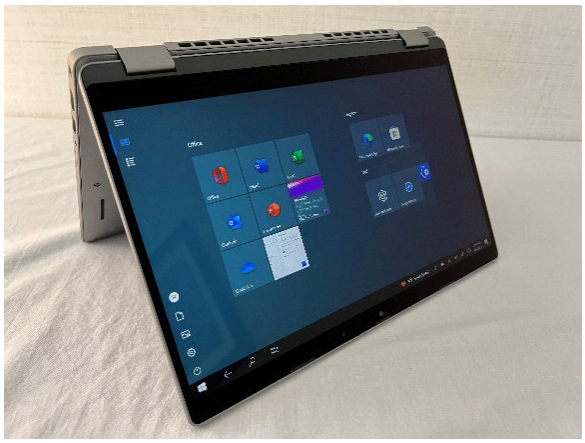

Second position in second mode

Dell's Induced Infringement

209. Since at least the filing of the Original Complaint, Dell knew of the '154 patent.

210. Since at least the filing of the Original Complaint, Dell knew that the Accused Products infringe at least claim 1 of the '154 patent when used by customers or other users, when imported by others, and when sold or offered for sale by Dell Inc. and resellers such as Best Buy.

211. Since at least the filing of the Original Complaint, Dell Technologies Inc. has induced infringement by actively encouraging Dell Inc. to directly infringe at least claim 1 of the ’154 patent by facilitating Dell Inc.’s sales, offers for sale, and use of the Accused Products.

212. Since at least the filing of the Original Complaint, Dell Inc. has induced infringement by actively encouraging resellers to directly infringe at least claim 1 of the ’154 patent by facilitating resellers’ sales and offers for sale of the Accused Products and by having the Accused Products manufactured and imported. On information and belief, Dell resellers include Best Buy. https://www.dell.com/en-us/lp/reseller_store_locator

213. Since at least the filing of the Original Complaint, Dell Inc. has induced infringement by actively encouraging customers or other users to directly infringe at least claim 1 of the ’154 patent. Dell Inc. has provided with the Accused Products and on Dell’s website, user manuals, product documentation, and advertising materials that induce customers or others to use the Accused Products in a manner that infringes at least claim 1 of the ’154 patent. For example, Dell’s website touts the availability of four display modes on its Latitude, Inspiron, and XPS 2-in-1 notebooks. *E.g.*, https://dl.dell.com/content/manual29903967-latitude-5330-latitude-5330-2in1-setup-and-specifications.pdf (pp. 10-12); https://dl.dell.com/topicspdf/inspiron-13-7391-2-in-1-laptop_users-guide_en-us.pdf (pp. 9-10); and https://dl.dell.com/topicspdf/xps-13-7390-2-in-1-laptop_setup-guide_en-us.pdf (pp. 9-10).

Dell’s Infringement

214. The foregoing description of Dell’s infringement is based on publicly available information. LiTL reserves the right to modify this description, including, for example, on the basis of information about the Accused Products that it obtains during discovery.

215. LiTL has been and is being irreparably harmed, and has incurred and will continue to incur damages, as a result of Dell's infringement of the '154 patent.

216. Dell's infringement of the '154 patent has damaged and continues to damage LiTL in an amount yet to be determined, of no less than a reasonable royalty.

COUNT V

(Infringement of U.S. Patent No. 9,003,315)

217. LiTL incorporates by reference and realleges all the foregoing paragraphs of the First Amended Complaint as if fully set forth herein.

Dell's Direct Infringement

218. Dell has directly infringed and continues to directly infringe, literally and/or equivalently, one or more claims of the '315 patent, including at least claim 1, including by importing, using, selling, and offering for sale in the United States the Accused Products.

219. The Accused Products (*e.g.*, the Latitude 5330 2-in-1) comprise a customized user interface for a computer system with a plurality of selectable I/O profiles configured to present computer operations to a user in a format configured to a selected I/O profile on a display component of the computer system, the user interface comprising. For example:

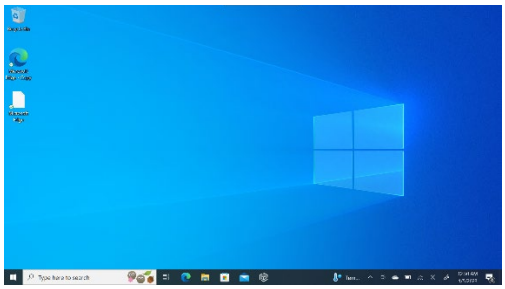

First customized user interface for an organizational view in a first computer system configuration

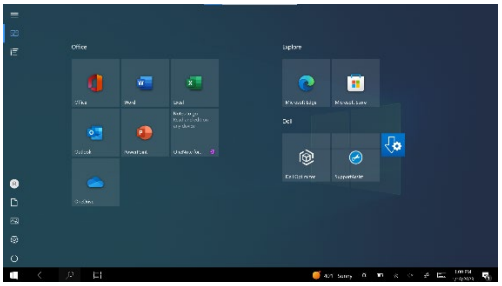

Second customized user interface for an organizational view in a second computer system configuration

220. The Accused Products (*e.g.*, the Latitude 5330 2-in-1) include at least one processor and a map based graphical user interface, executing on the at least one processor operatively connected to a memory of the computer system. The map based graphical user interface, when executing, is configured to display information on the display component of the computer system. For example:

Processor
12th Gen Intel® Core™ i5-1235U, vPro® Essentials (12MB, 10 core, 12 thread, up to 4.40 GHz Turbo)

Memory ⓘ
8 GB, DDR4, 3200 MHz, integrated

Processor and Memory Specifications

See, e.g., Latitude 5330 2-in-1 Webpage.

221. The Accused Products (*e.g.*, the Latitude 5330 2-in-1) include a map based user interface further configured to display a plurality of views of a plurality of visual representations of computer content on the computer system, wherein the computer content includes at least one of selectable digital content, executable computer applications, configurable computer settings, selectable computer operations and passive digital content. For example:

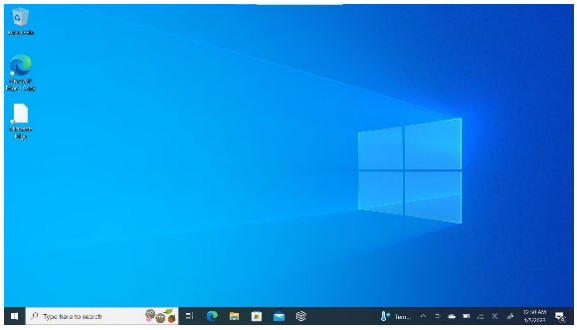

Visual representations of computer content in a first organizational view

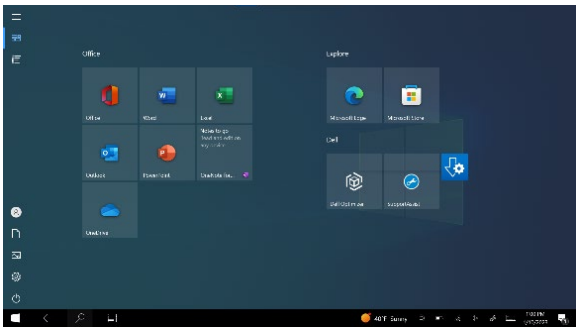

Visual representations of computer content in a second organizational view

222. The Accused Products (*e.g.*, the Latitude 5330 2-in-1) display the plurality of visual representations of computer content rendered on the display component, wherein the plurality of visual representations of computer content include an association to a first home view of the plurality of views. For example:

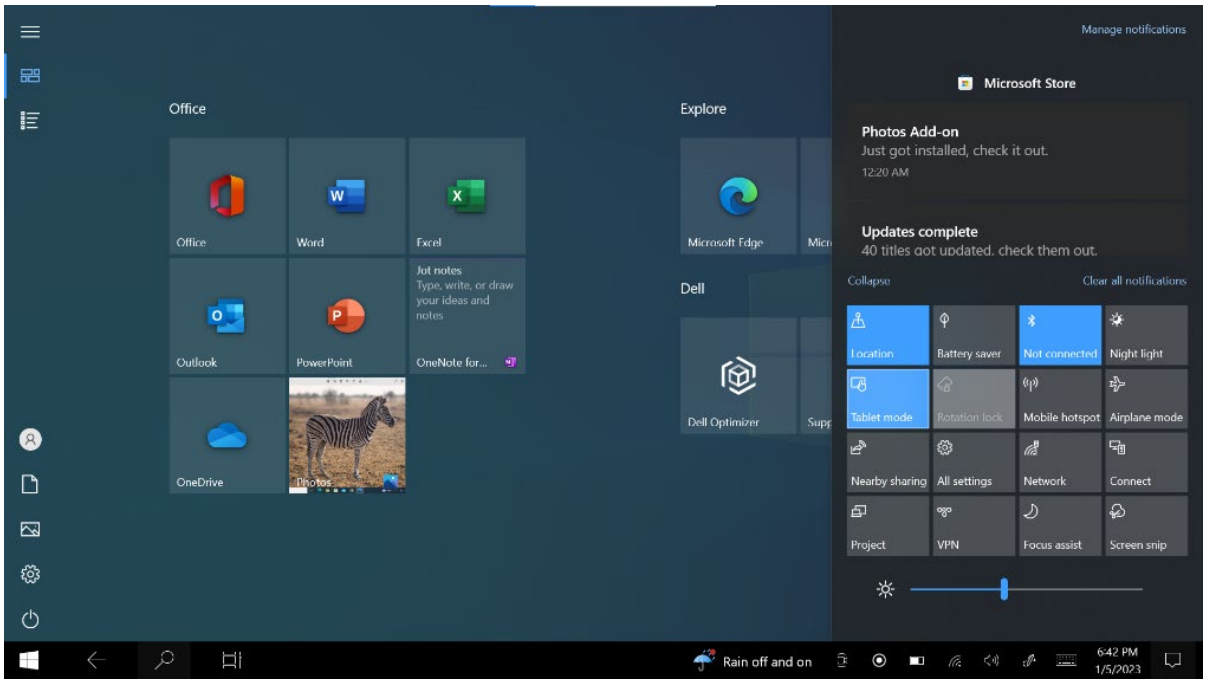

Second organizational view (showing Tablet Mode selected)

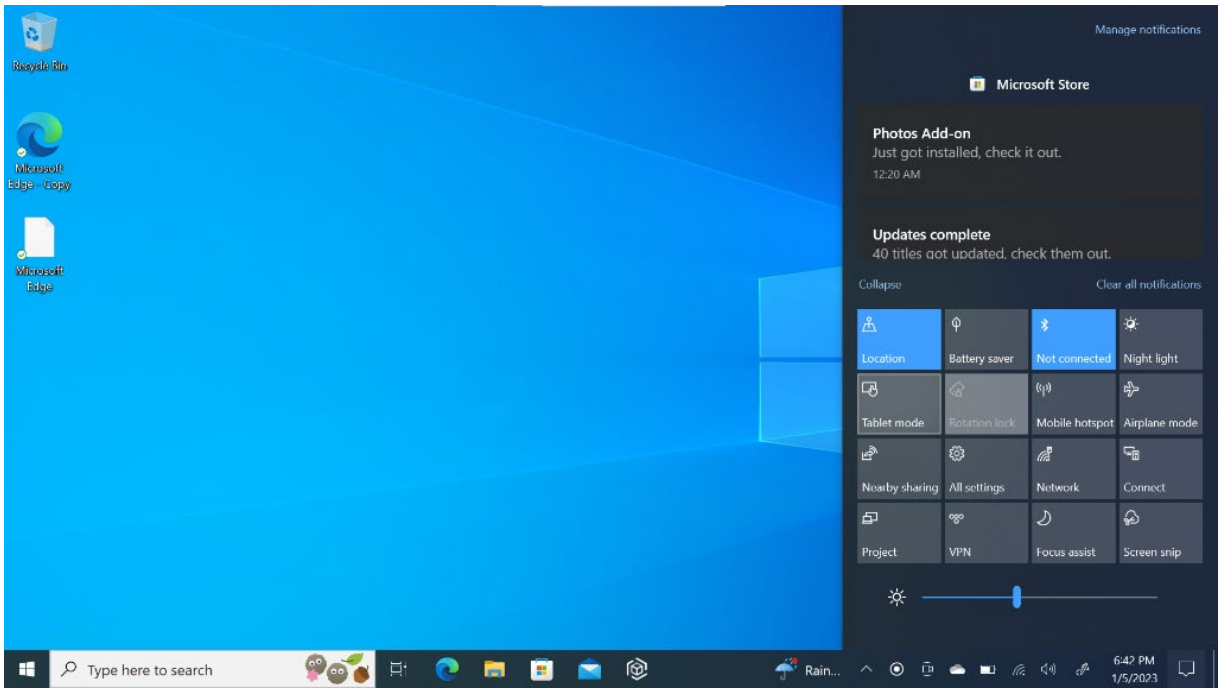

First home view (showing view after Tablet Mode is de-selected)

223. The Accused Products (*e.g.*, the Latitude 5330 2-in-1) display the first home view including a display of the computer content, and wherein the each of the plurality of visual

representations is responsive to focus and execution, wherein execution includes selecting the visual representation. For example:

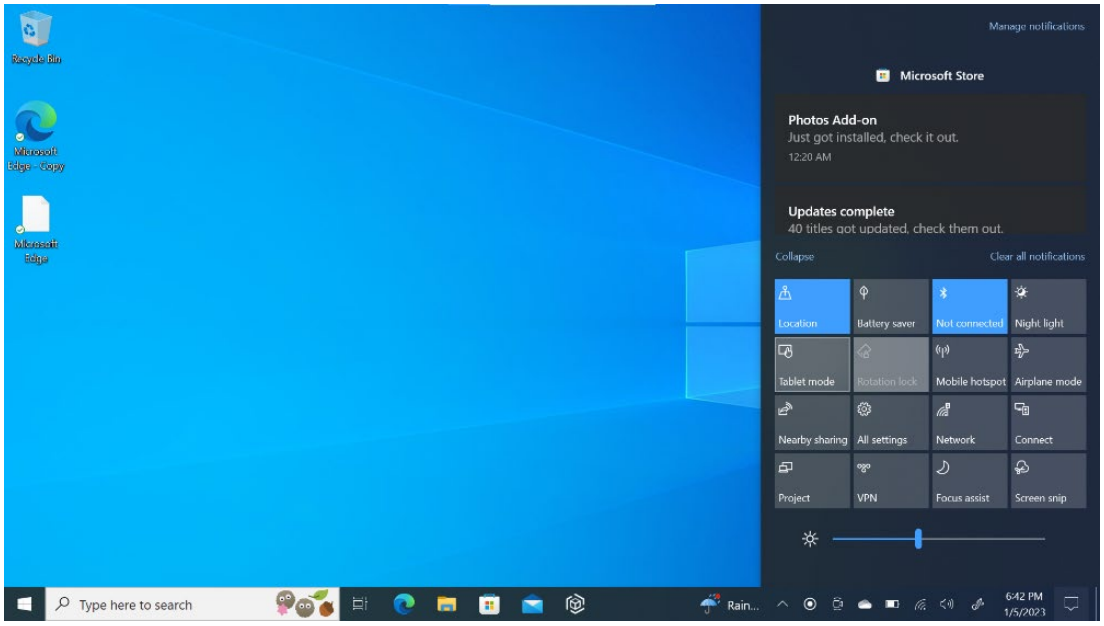

Plurality of visual representations in the first home view
(showing Tablet Mode button responsive to focus)

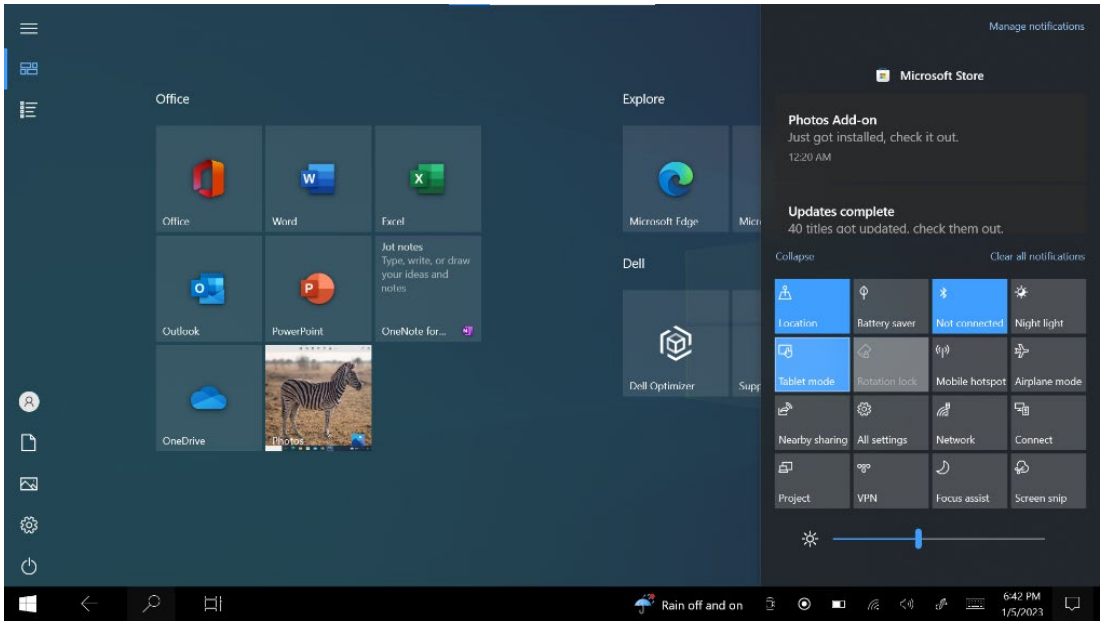

Second organizational view (which is transitioned to after
Tablet Mode button is selected)

224. The Accused Products (*e.g.*, the Latitude 5330 2-in-1) include the first home view as a first organizational view of at least one application and computer content displayed responsive to activation of the system. For example:

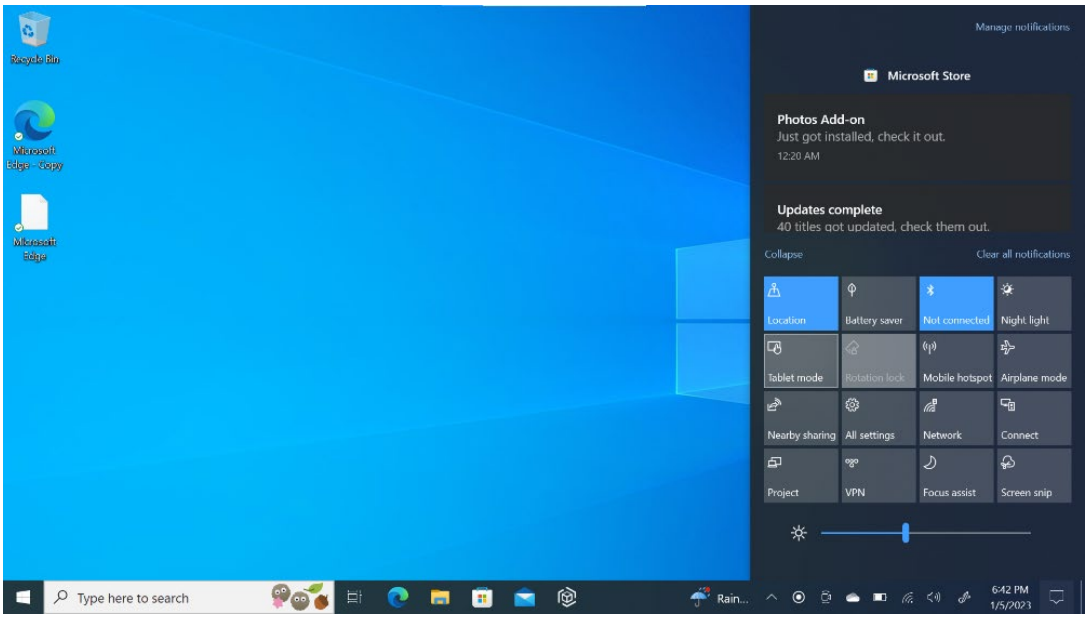

First home view

225. The Accused Products (*e.g.*, the Latitude 5330 2-in-1) include an execution component, executing on the at least one processor, configured to identify at least a first and a second computer system configuration based on sensor input indicating a position of the display component relative to a base component. For example:

First computer system configuration

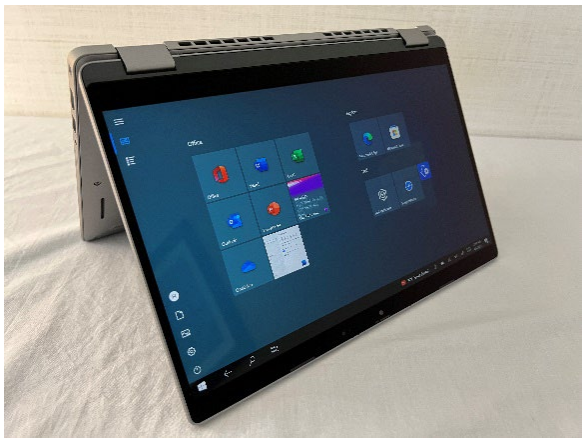

Second computer system configuration

226. The Accused Products (*e.g.*, the Latitude 5330 2-in-1) include an execution component configured to select, responsive to the sensor input, a first home view from the plurality of views for the first computer system configuration, wherein the first home view is configured to organize a first set of the plurality of visual representations. The execution component is further configured to filter the first set of visual representations to present content that is optimized for viewing in the second system configuration at least in part by identifying content to filter, removing the identified content from the first set of visual representations, and generating a second set of visual representations based on the filtered first set of visual representations, wherein the second set of visual representations includes at least one different member than the first set of visual representations. For example:

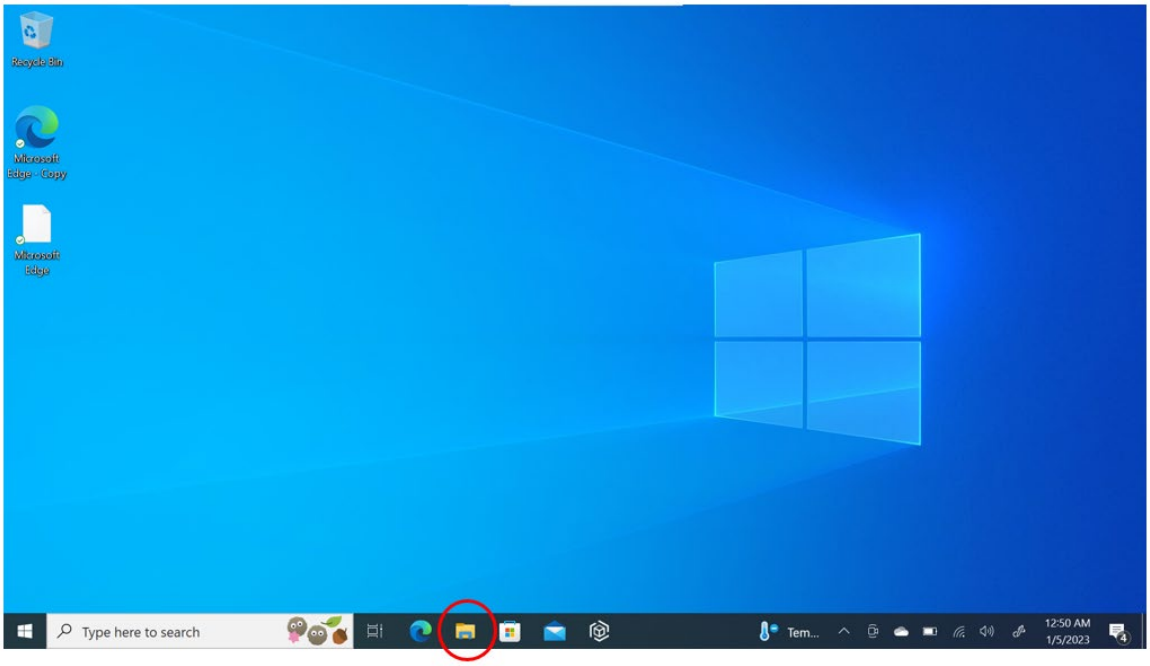

First home view for a first computer system configuration

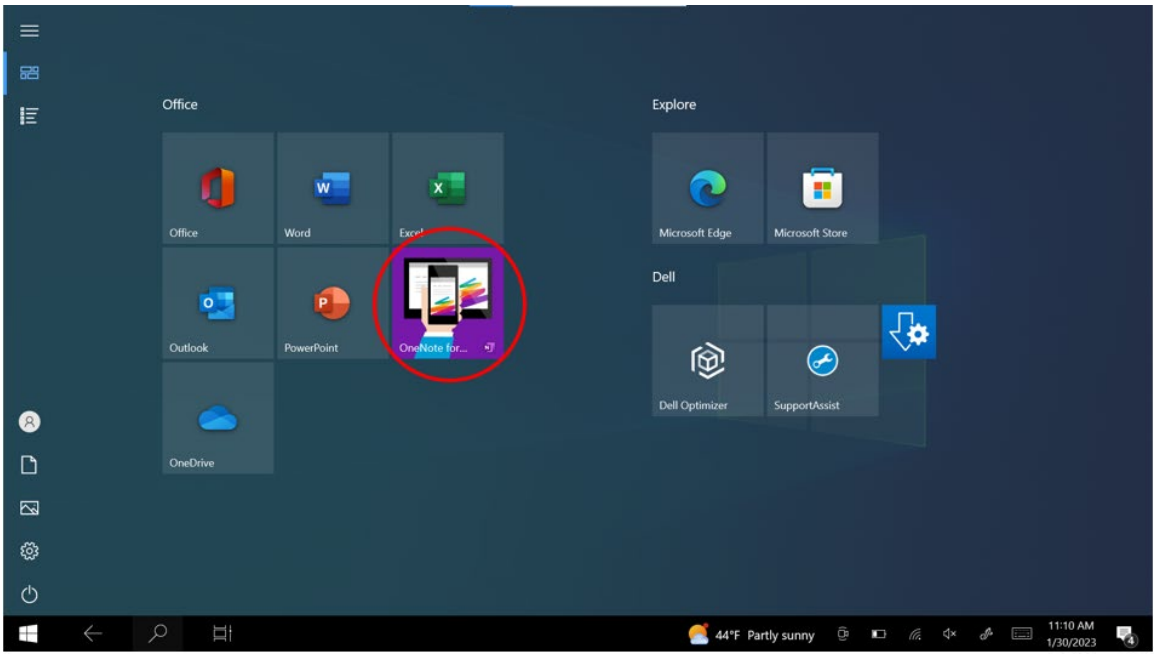

Second organizational view for a second computer system configuration

227. The Accused Products (*e.g.*, the Latitude 5330 2-in-1) include an execution component configured to transition, automatically in response to the sensor input, the display component between at least the first home view of the plurality of views and a second default content view of the plurality of views, wherein the second default content view is configured to

organize the second set of visual representations, wherein the second default content view is a second organizational view of at least one application and computer content, and wherein the sensor input indicates a transition to the second computer system configuration. For example:

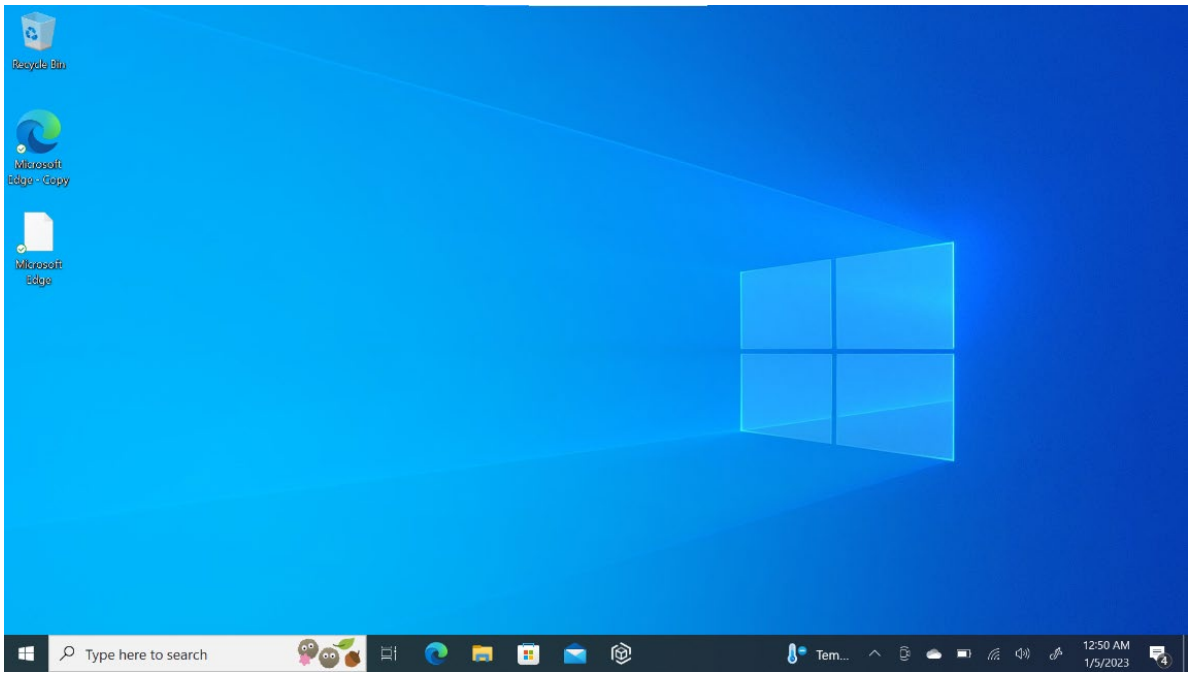

First home view

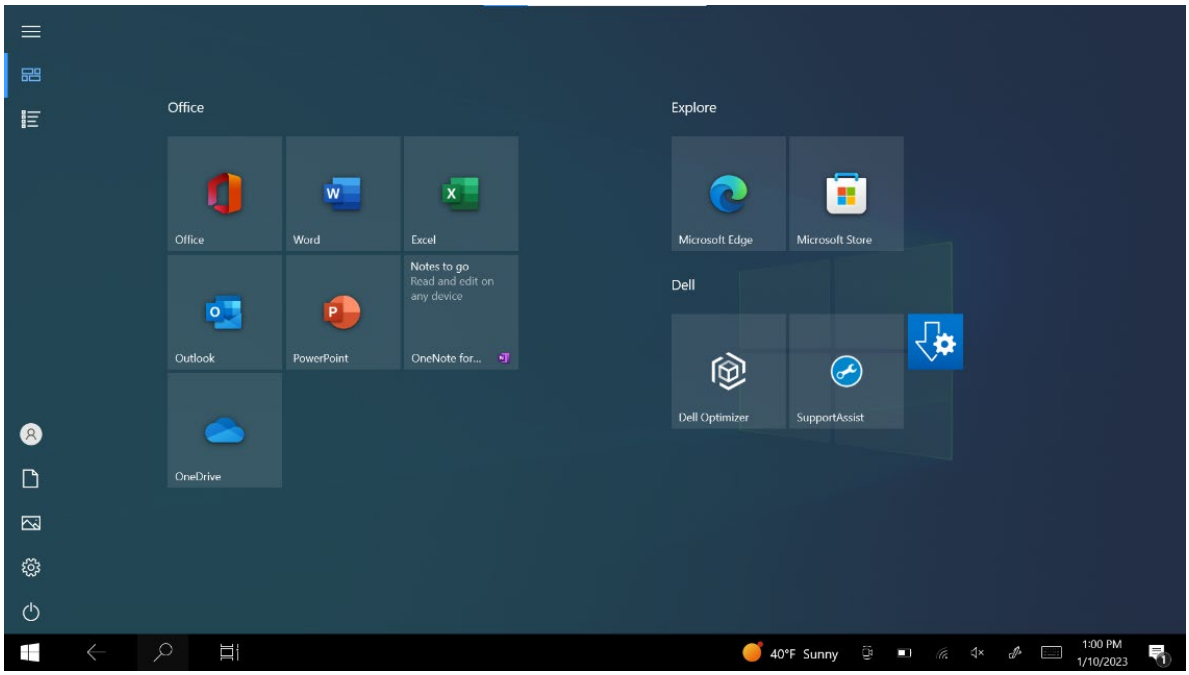

Second default content view

Dell's Induced Infringement

228. Since at least the filing of the Original Complaint, Dell knew of the '315 patent.

229. Since at least the filing of the Original Complaint, Dell knew that the Accused Products infringe at least claim 1 of the '315 patent when used by customers or other users, when imported by others, and when sold or offered for sale by Dell Inc. and resellers such as Best Buy.

230. Since at least the filing of the Original Complaint, Dell Technologies Inc. has induced infringement by actively encouraging Dell Inc. to directly infringe at least claim 1 of the '315 patent by facilitating Dell Inc.'s sales, offers for sale, and use of the Accused Products.

231. Since at least the filing of the Original Complaint, Dell Inc. has induced infringement by actively encouraging resellers to directly infringe at least claim 1 of the '315 patent by facilitating resellers' sales and offers for sale of the Accused Products and by having the Accused Products manufactured and imported. On information and belief, Dell resellers include Best Buy. https://www.dell.com/en-us/lp/reseller_store_locator

232. Since at least the filing of the Original Complaint, Dell Inc. has induced infringement by actively encouraging customers or other users to directly infringe at least claim 1 of the '315 patent. Dell Inc. has provided with the Accused Products and on Dell's website, user manuals, product documentation, and advertising materials that induce customers or others to use the Accused Products in a manner that infringes at least claim 1 of the '315 patent. For example, Dell's website touts the availability of four display modes on its Latitude, Inspiron, and XPS 2-in-1 notebooks. *E.g.*, https://dl.dell.com/content/manual29903967-latitude-5330-latitude-5330-2in1-setup-and-specifications.pdf (pp. 10-12); https://dl.dell.com/topicspdf/inspiron-13-7391-2-in-1-laptop_users-guide_en-us.pdf (pp. 9-10); and https://dl.dell.com/topicspdf/xps-13-7390-2-in-1-laptop_setup-guide_en-us.pdf (pp. 9-10).

Dell's Infringement

233. The foregoing description of Dell's infringement is based on publicly available information. LiTL reserves the right to modify this description, including, for example, on the basis of information about the Accused Products that it obtains during discovery.

234. LiTL has been and is being irreparably harmed, and has incurred and will continue to incur damages, as a result of Dell's infringement of the '315 patent.

235. Dell's infringement of the '315 patent has damaged and continues to damage LiTL in an amount yet to be determined, of no less than a reasonable royalty.

COUNT VI

(Infringement of U.S. Patent No. 9,880,715)

236. LiTL incorporates by reference and realleges all the foregoing paragraphs of this First Amended Complaint as if fully set forth herein.

Dell's Direct Infringement

237. Dell has directly infringed and continues to directly infringe, literally and/or equivalently, one or more of the claims of the '715 patent, including at least claim 1, including by importing, using, selling, and offering for sale in the United States the Accused Products.

238. The Accused Products (*e.g.*, the Latitude 5330 2-in-1) include a customized user interface to display computer content on a display component of a computer system including a keyboard. For example:

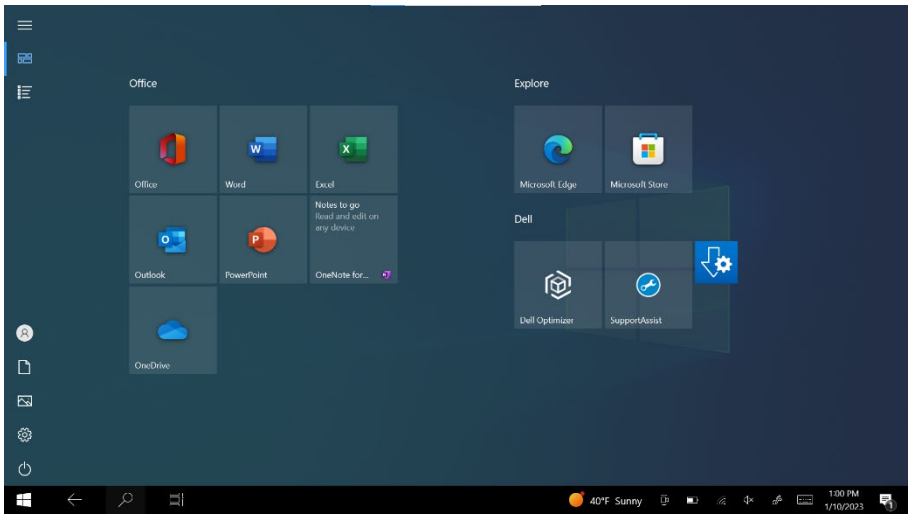

Screenshot from Latitude 5330 2-in-1, home screen in tablet mode.

239. The Accused Products (*e.g.*, the Latitude 5330 2-in-1) include a user interface comprising at least one processor operatively connected to a memory of the computer system. For example:

Processor
12th Gen Intel® Core™ i5-1235U, vPro® Essentials (12MB, 10 core, 12 thread, up to 4.40 GHz Turbo)

Memory ⓘ
8 GB, DDR4, 3200 MHz, integrated

Processor and Memory Specifications

See, e.g., Latitude 5330 2-in-1 Webpage.

240. The Accused Products (*e.g.*, the Latitude 5330 2-in-1) include a graphical user interface, executing on the at least one processor, configured to display the computer content on the display component of the computer system. For example:

241. The Accused Products (*e.g.*, the Latitude 5330 2-in-1) include a graphical user interface configured to display a plurality of views of a plurality of visual representations of computer content. For example, the Latitude 5330 2-in-1 is configured to display a home screen in laptop mode and a home screen in tablet mode:

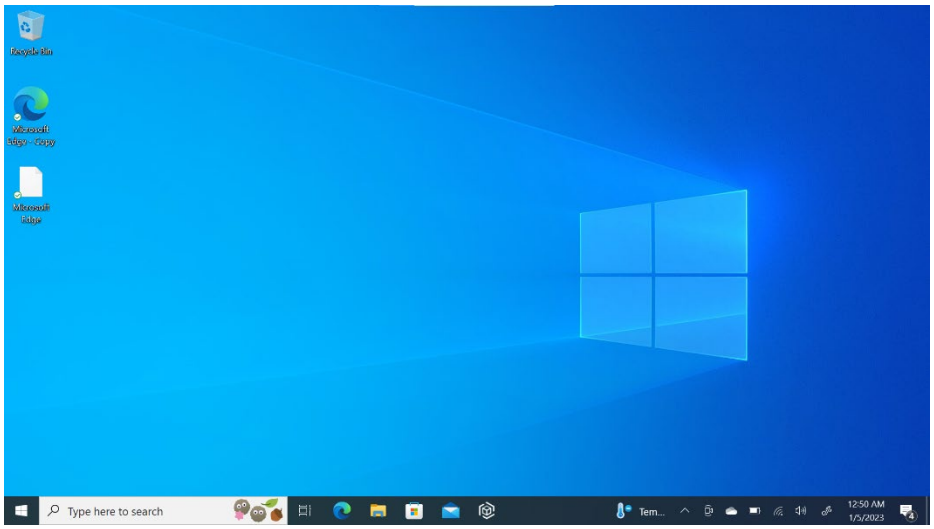

First view

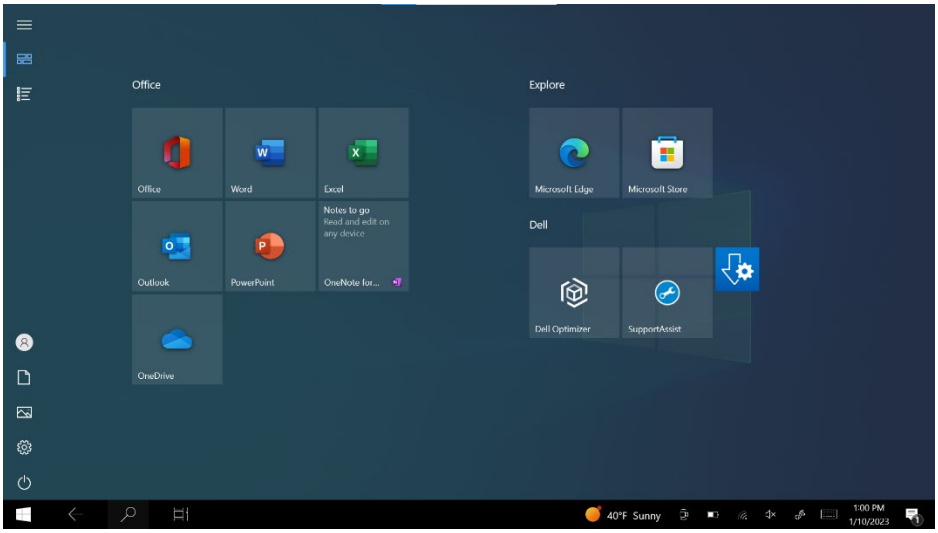

Second view

242. The Accused Products (*e.g.*, the Latitude 5330 2-in-1) include computer content that includes at least one of selectable digital content, selectable computer operations and passive digital content. For example, the Microsoft Store app can be selected from the task bar in laptop mode and in tablet mode:

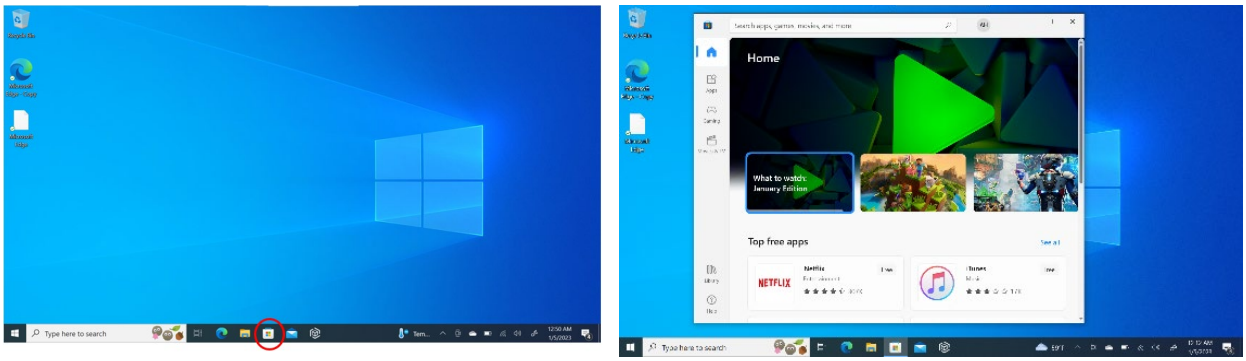

Microsoft Store selected in first view

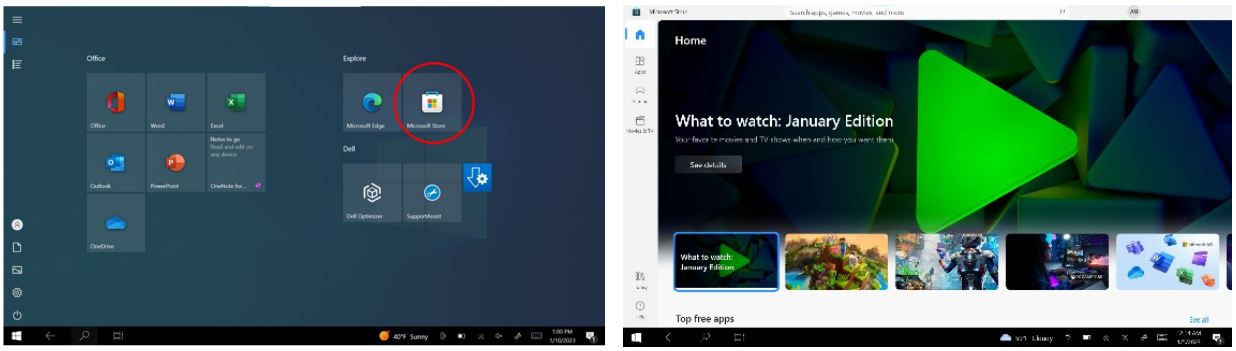

Microsoft Store selected in second view

243. The Accused Products (*e.g.*, the Latitude 5330 2-in-1) include an execution component, executing on the at least one processor, configured to detect a current computer system configuration from at least a first computer system configuration where the keyboard is operable to receive input from an operator of the computer system to control the computer system and a second computer system configuration where the keyboard is inoperable to receive input from the operator of the computer system to control the computer system; select one of the plurality of views for display on the computer system in response to the detected current computer system configuration; and transition the display component to the selected one of the plurality of views. For example, the keyboard in the Latitude 5330 2-in-1 is operable in clamshell mode and inoperable in tent/stand/tablet mode:

First computer system configuration

Second computer system configuration

When you open your 2-in-1 laptop screen more than 225 degrees the Keyboard and Touchpad are disabled by default.

See, e.g., Dell 2-in-1 Tablet Mode Support.

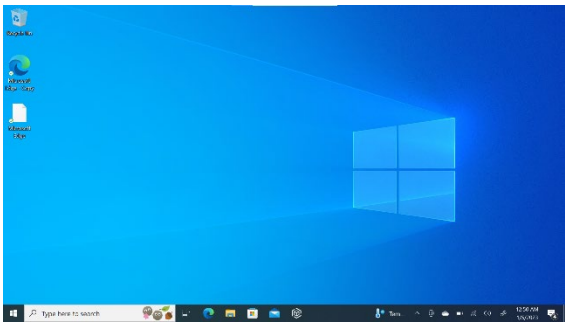

First view

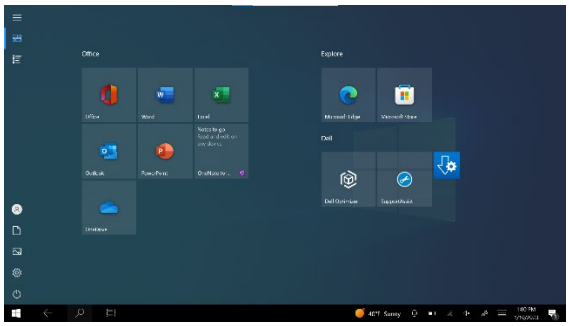

Second view

Dell's Induced Infringement

244. Since at least the filing of the Original Complaint, Dell knew of the '715 patent.

245. Since at least the filing of the Original Complaint, Dell knew that the Accused Products infringe at least claim 1 of the ’715 patent when used by customers or other users, when imported by others, and when sold or offered for sale by Dell Inc. and resellers such as Best Buy.

246. Since at least the filing of the Original Complaint, Dell Technologies Inc. has induced infringement by actively encouraging Dell Inc. to directly infringe at least claim 1 of the ’715 patent by facilitating Dell Inc.’s sales, offers for sale, and use of the Accused Products.

247. Since at least the filing of the Original Complaint, Dell Inc. has induced infringement by actively encouraging resellers to directly infringe at least claim 1 of the ’715 patent by facilitating resellers’ sales and offers for sale of the Accused Products and by having the Accused Products manufactured and imported. On information and belief, Dell resellers include Best Buy. https://www.dell.com/en-us/lp/reseller_store_locator

248. Since at least the filing of the Original Complaint, Dell Inc. has induced infringement by actively encouraging customers or other users to directly infringe at least claim 1 of the ’715 patent. Dell Inc. has provided with the Accused Products and on Dell’s website, user manuals, product documentation, and advertising materials that induce customers or others to use the Accused Products in a manner that infringes at least claim 1 of the ’715 patent. For example, Dell’s website touts the availability of four display modes on its Latitude, Inspiron, and XPS 2-in-1 notebooks. *E.g.*, https://dl.dell.com/content/manual29903967-latitude-5330-latitude-5330-2in1-setup-and-specifications.pdf (pp. 10-12); https://dl.dell.com/topicspdf/inspiron-13-7391-2-in-1-laptop_users-guide_en-us.pdf (pp. 9-10); and https://dl.dell.com/topicspdf/xps-13-7390-2-in-1-laptop_setup-guide_en-us.pdf (pp. 9-10).

Dell's Infringement

249. The foregoing description of Dell's infringement is based on publicly available information. LiTL reserves the right to modify this description, including, for example, on the basis of information about the Accused Products that it obtains during discovery.

250. LiTL has been and is being irreparably harmed, and has incurred and will continue to incur damages, as a result of Dell's infringement of the '715 patent.

251. Dell's infringement of the '715 patent has damaged and continues to damage LiTL in an amount yet to be determined, of no less than a reasonable royalty.

COUNT VII

(Infringement of U.S. Patent No. 10,564,818)

252. LiTL incorporates by reference and realleges all the foregoing paragraphs of this First Amended Complaint as if fully set forth herein.

Dell's Direct Infringement

253. Dell has directly infringed and continues to directly infringe, literally and/or equivalently, one or more of the claims of the '818 patent, including at least claim 1, including by importing, using, selling, and offering for sale in the United States the Accused Products.

254. The Accused Products (*e.g.*, the Latitude 5330 2-in-1) include one non-transitory computer-readable storage medium storing processor-executable instructions that, when executed by at least one processor in a computer system comprising a display and a keyboard and being configurable between a plurality of computer system configurations, cause the at least one processor to perform a method. For example:

Processor 12th Gen Intel® Core™ i5-1235U, vPro® Essentials (12MB, 10 core, 12 thread, up to 4.40 GHz Turbo)

Memory ⓘ 8 GB, DDR4, 3200 MHz, integrated

Processor and Memory Specifications

See, e.g., Latitude 5330 2-in-1 Webpage.

First computer system configuration

Second computer system configuration

255. The Accused Products (*e.g.*, the Latitude 5330 2-in-1) include a processor to perform a method displaying a plurality of views of a plurality of visual representations of computer content. For example:

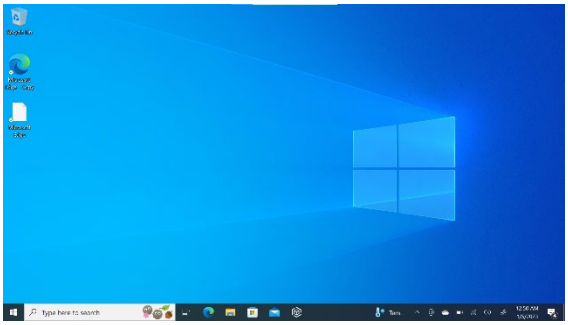

First view in a first configuration

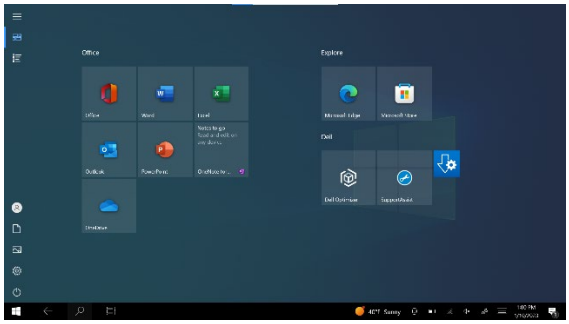

Second view in a second configuration

256. The Accused Products (*e.g.*, the Latitude 5330 2-in-1) include a processor to perform a method detecting a current computer system configuration from at least a first computer system configuration of the plurality of computer system configurations where the keyboard is operable to receive input from an operator of the computer system to control the computer system and a second computer system configuration of the plurality of computer

system configurations where the keyboard is inoperable to receive input from the operator of the computer system to control the computer system. For example:

First computer system configuration

Second computer system configuration

When you open your 2-in-1 laptop screen more than 225 degrees the Keyboard and Touchpad are disabled by default.

See, e.g., Dell 2-in-1 Tablet Mode Support.

257. The Accused Products (*e.g.*, the Latitude 5330 2-in-1) include a processor to perform a method selecting one of the plurality of views for display on the computer system in response to the detected current computer system configuration; transitioning to the selected one of the plurality of views; and displaying the selected one of the plurality of views. For example:

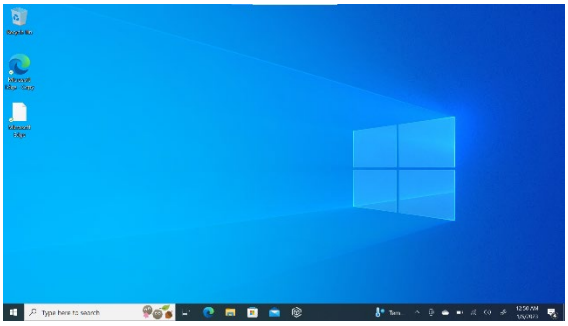

First view in a first configuration

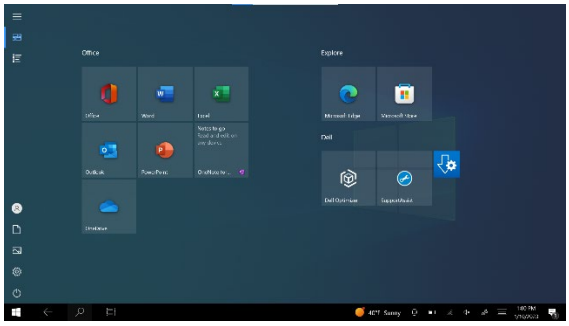

Second view in a second configuration

Dell's Induced Infringement

258. Since at least the filing of the Original Complaint, Dell knew of the '818 patent.

Dell's Induced Infringement

259. Since at least the filing of the Original Complaint, Dell knew that the Accused Products infringe at least claim 1 of the '818 patent when used by customers or other users, when imported by others, and when sold or offered for sale by Dell Inc. and resellers such as Best Buy.

260. Since at least the filing of the Original Complaint, Dell Technologies Inc. has induced infringement by actively encouraging Dell Inc. to directly infringe at least claim 1 of the '818 patent by facilitating Dell Inc.'s sales, offers for sale, and use of the Accused Products.

261. Since at least the filing of the Original Complaint, Dell Inc. has induced infringement by actively encouraging resellers to directly infringe at least claim 1 of the '818 patent by facilitating resellers' sales and offers for sale of the Accused Products and by having the Accused Products manufactured and imported. On information and belief, Dell resellers include Best Buy. https://www.dell.com/en-us/lp/reseller_store_locator

262. Since at least the filing of the Original Complaint, Dell Inc. has induced infringement by actively encouraging customers or other users to directly infringe at least claim 1 of the '818 patent. Dell Inc. has provided with the Accused Products and on Dell's website, user manuals, product documentation, and advertising materials that induce customers or others to use the Accused Products in a manner that infringes at least claim 1 of the '818 patent. For example, Dell's website touts the availability of four display modes on its Latitude, Inspiron, and XPS 2-in-1 notebooks. *E.g.*, https://dl.dell.com/content/manual29903967-latitude-5330-latitude-5330-2in1-setup-and-specifications.pdf (pp. 10-12); https://dl.dell.com/topicspdf/inspiron-13-7391-2-in-1-laptop_users-guide_en-us.pdf (pp. 9-10); and https://dl.dell.com/topicspdf/xps-13-7390-2-in-1-laptop_setup-guide_en-us.pdf (pp. 9-10).

Dell's Infringement

263. The foregoing description of Dell's infringement is based on publicly available information. LiTL reserves the right to modify this description, including, for example, on the basis of information about the Accused Products that it obtains during discovery.

264. LiTL has been and is being irreparably harmed, and has incurred and will continue to incur damages, as a result of Dell's infringement of the '818 patent.

265. Dell's infringement of the '818 patent has damaged and continues to damage LiTL in an amount yet to be determined, of no less than a reasonable royalty.

COUNT VIII

(Infringement of U.S. Patent No. 8,612,888)

266. LiTL incorporates by reference and realleges all the foregoing paragraphs of this First Amended Complaint as if fully set forth herein.

Dell's Direct Infringement

267. Dell has directly infringed and continues to directly infringe, literally and/or equivalently, one or more of the claims of the '888 patent, including at least claim 27, including by importing, using, selling, and offering for sale in the United States the Accused Products.

268. The Accused Products (*e.g.*, the Latitude 5330 2-in-1) include a system for accessing and managing digital media libraries with a plurality of selectable I/O profiles. For example, the Latitude 5330 2-in-1 includes the Microsoft Photos app, which can be accessed in a first and second view:

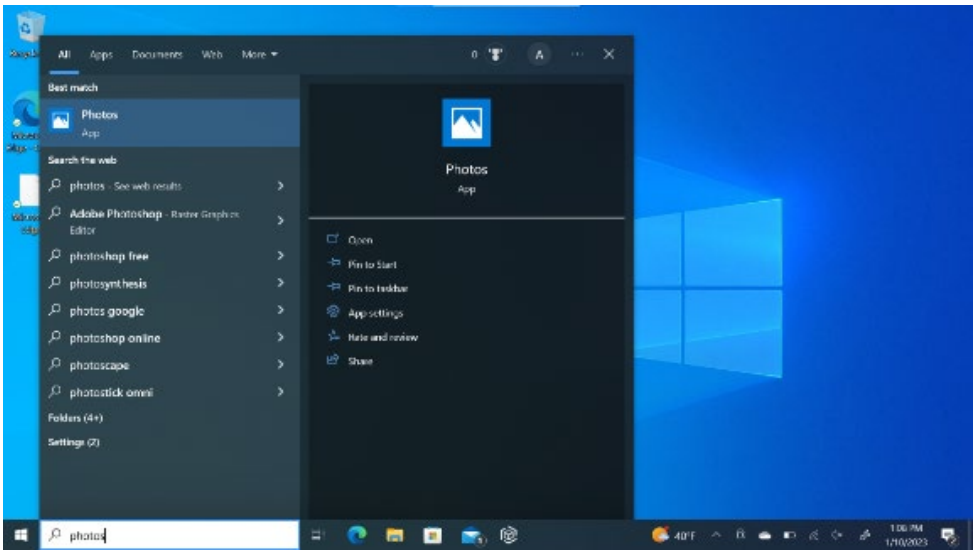

Microsoft Photos app in a first I/O profile

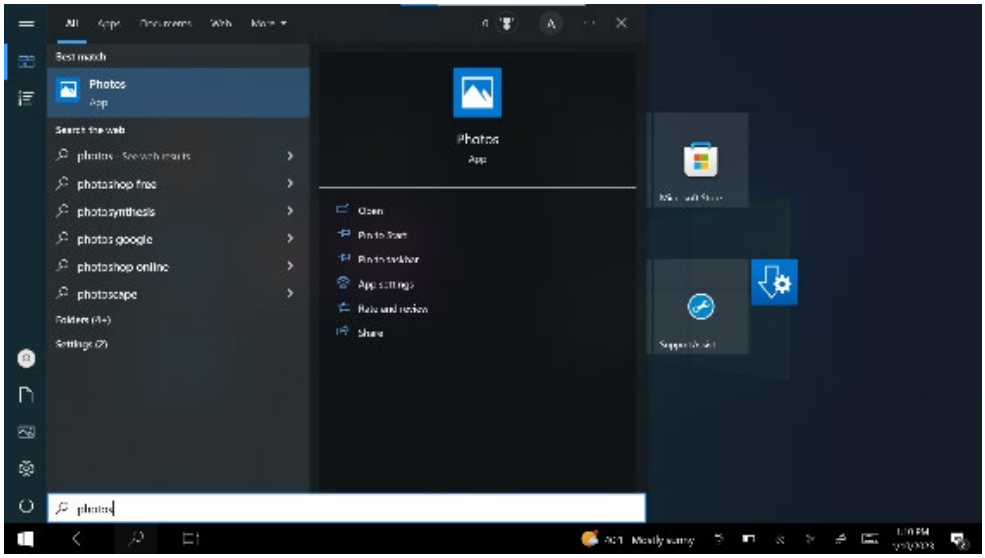

Microsoft Photos app in a second I/O profile

269. The Accused Products (*e.g.*, the Latitude 5330 2-in-1) include a display component configured to display a graphical user interface on a computing device, wherein the graphical user interface comprises at least a plurality of views of digital media content, wherein the plurality of views include at least one of a plurality of visual representations. For example, the Latitude 5330 2-in-1 includes a laptop mode and a tablet mode, and a different view

associated with each of the different I/O profiles, and each of these views has a plurality of visual representations of digital content:

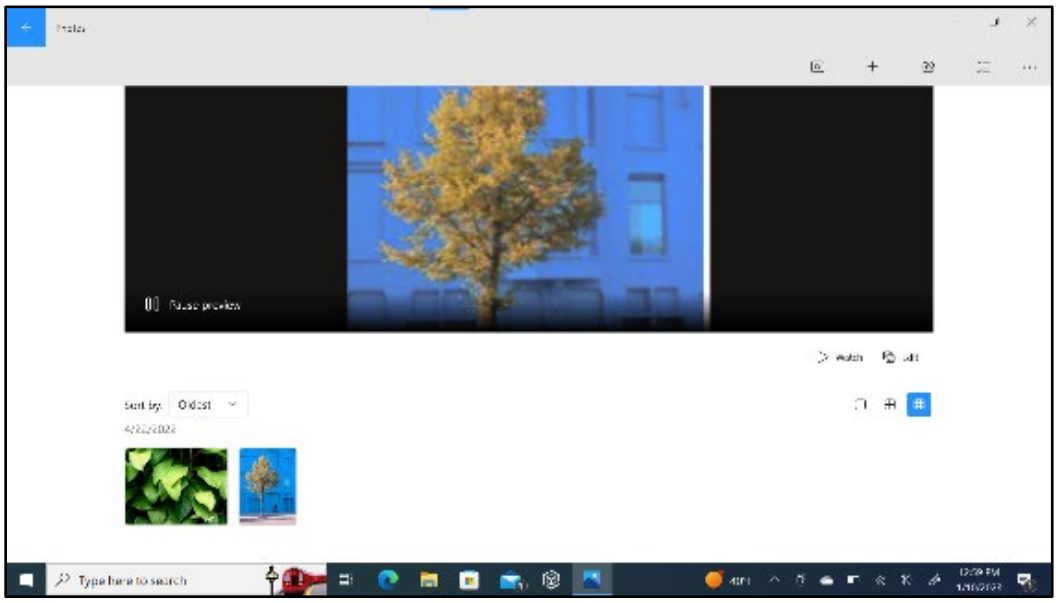

Microsoft Photos app in a first I/O profile with a first view

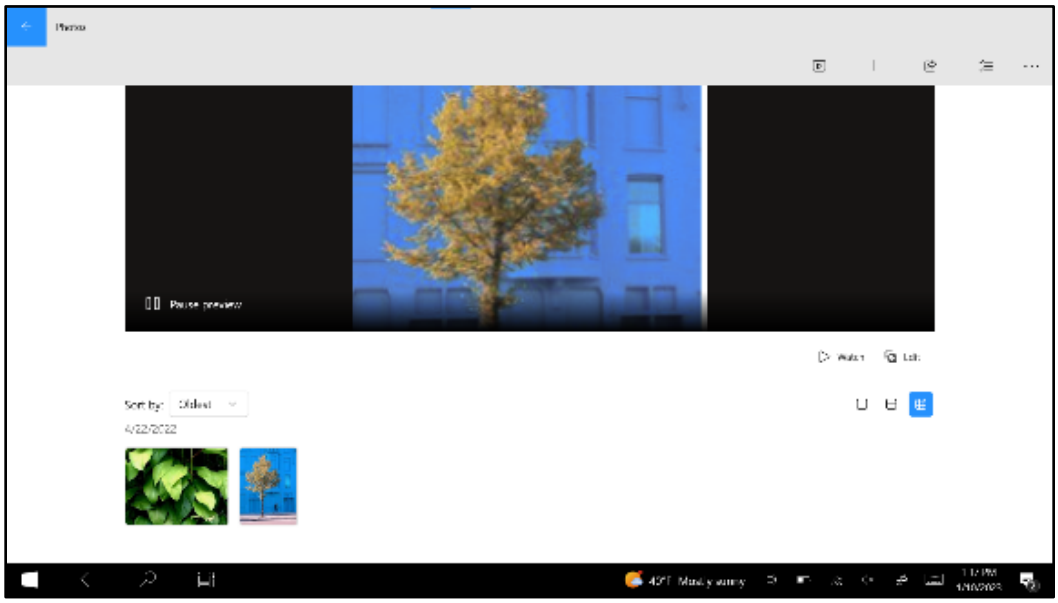

Microsoft Photos app in a second I/O profile with a second view

270. The Accused Products (*e.g.*, the Latitude 5330 2-in-1) include an execution component configured to transition the graphical user interface between the plurality of views in

response to selection of an I/O profile. For example, the Latitude 5330 2-in-1 is configured to transition between a plurality of views in response to selection of laptop and tablet modes:

First physical configuration

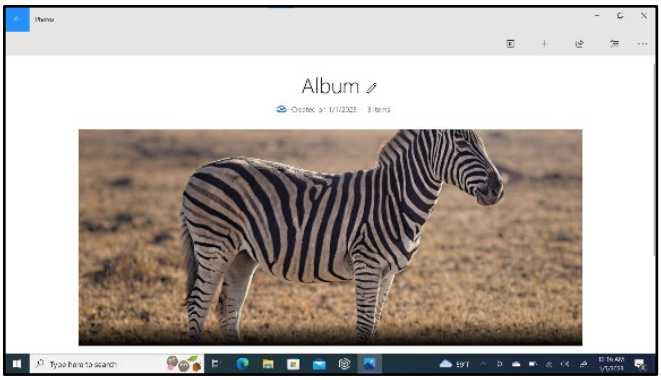

First I/O profile with a first view

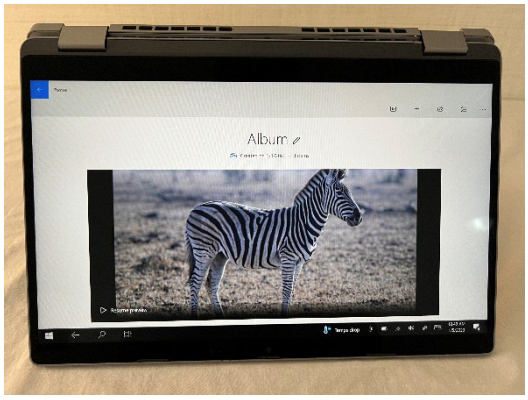

Second physical configuration

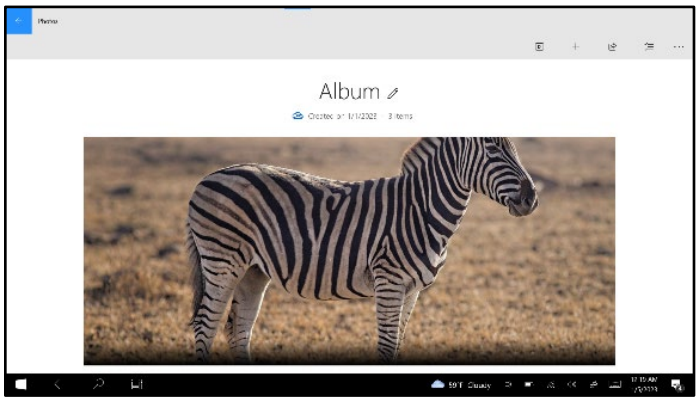

Second I/O profile with a second view

271. Selecting the I/O profile within the Accused Products (*e.g.*, the Latitude 5330 2-in-1) includes responding to user rotation of a display component of the computing device about a longitudinal axis running along an interface between the display component and a base of the streamlined computing device; responding to rotation of the display component about the longitudinal from a closed mode to a first physical orientation configures the computing device into a laptop mode having a first physical configuration of the display component and the base with one of the plurality of views as a default display; and responding to rotation of the display component about the longitudinal axis from the closed

mode to a second physical orientation configures the computing device into another display mode having a second physical configuration of the display component and the base with another one of the plurality of views as the default display. For example, the Latitude 5330 2-in-1 can display a laptop mode when rotated from a closed mode to a notebook mode, and can further display a tablet mode when rotated from a notebook mode to an easel mode.

First physical configuration with a first view

Second physical configuration with a second view

272. The Accused Products (*e.g.*, the Latitude 5330 2-in-1) include a view selector component configured to transition between the plurality of views in response to activation. For example:

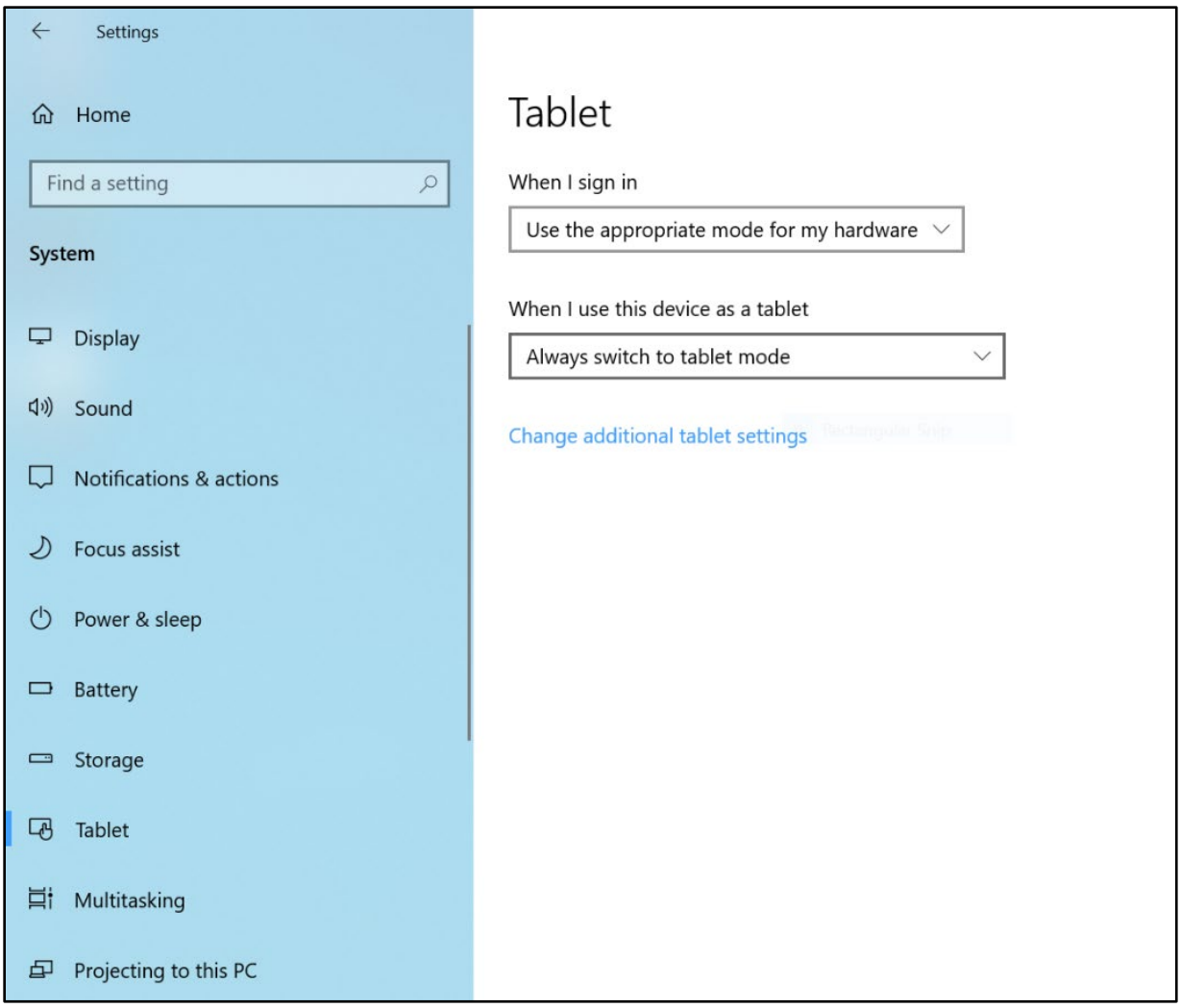

273. The Accused Products (*e.g.*, the Latitude 5330 2-in-1) include a storage component configured to store an association between at least one of a plurality of visual representations and digital media content. For example, the Latitude 5330 2-in-1 includes the Microsoft Photos app, which is configured to store an association between thumbnail previews of content and digital media content:

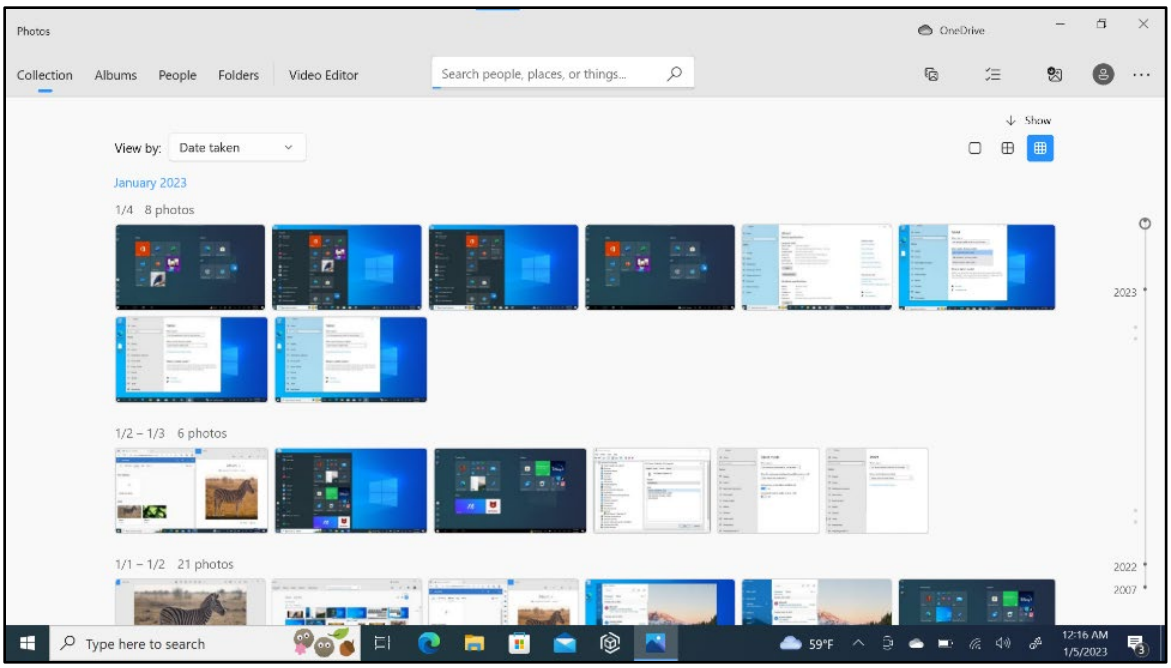

Microsoft Photos app

274. The Accused Products (*e.g.*, the Latitude 5330 2-in-1) include an execution component further configured to execute the association with the at least one of the plurality of visual representations with digital media content in response to selection and transition the display to a view of the digital media content in response to the act of executing the association. For example, selecting a thumbnail preview in the Microsoft Photos app transitions to a view of the digital media content:

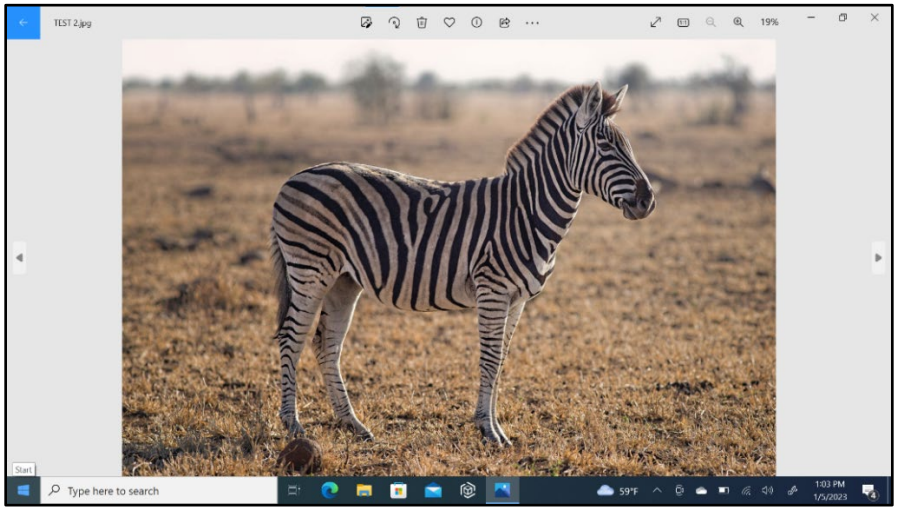

Digital media content in Microsoft Photos app

275. The Accused Products (*e.g.*, the Latitude 5330 2-in-1) include a display component configured to display user digital media content and referenced digital media content in the view of the digital media content. For example, the Latitude 5330 2-in-1 includes the Microsoft Photos app, which is configured to permit users to manage digital media content libraries (*e.g.*, in an album located locally or in a remote location such as OneDrive):

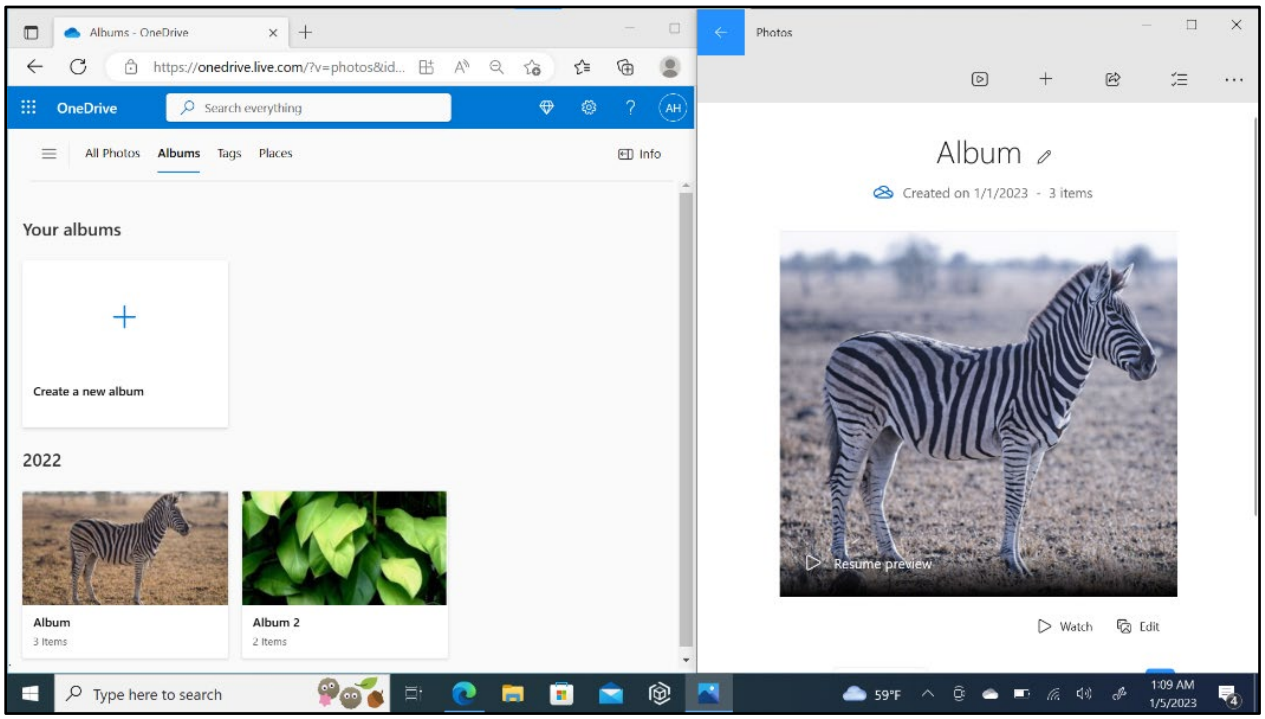

OneDrive album in Microsoft Photos app

Dell's Induced Infringement

276. Since at least the filing of the Original Complaint, Dell knew of the '888 patent.

277. Since at least the filing of the Original Complaint, Dell knew that the Accused Products infringe at least claim 27 of the '888 patent when used by customers or other users, when imported by others, and when sold or offered for sale by Dell Inc. and resellers such as Best Buy.

278. Since at least the filing of the Original Complaint, Dell Technologies Inc. has induced infringement by actively encouraging Dell Inc. to directly infringe at least claim 27 of the ’888 patent by facilitating Dell Inc.’s sales, offers for sale, and use of the Accused Products.

279. Since at least the filing of the Original Complaint, Dell Inc. has induced infringement by actively encouraging resellers to directly infringe at least claim 27 of the ’888 patent by facilitating resellers’ sales and offers for sale of the Accused Products and by having the Accused Products manufactured and imported. On information and belief, Dell resellers include Best Buy. https://www.dell.com/en-us/lp/reseller_store_locator

280. Since at least the filing of the Original Complaint, Dell Inc. has induced infringement by actively encouraging customers or other users to directly infringe at least claim 27 of the ’888 patent. Dell Inc. has provided with the Accused Products and on Dell’s website, user manuals, product documentation, and advertising materials that induce customers or others to use the Accused Products in a manner that infringes at least claim 27 of the ’888 patent. For example, Dell’s website touts the availability of four display modes on its Latitude, Inspiron, and XPS 2-in-1 notebooks. *E.g.*, https://dl.dell.com/content/manual29903967-latitude-5330-latitude-5330-2in1-setup-and-specifications.pdf (pp. 10-12); https://dl.dell.com/topicspdf/inspiron-13-7391-2-in-1-laptop_users-guide_en-us.pdf (pp. 9-10); and https://dl.dell.com/topicspdf/xps-13-7390-2-in-1-laptop_setup-guide_en-us.pdf (pp. 9-10).

Dell’s Infringement

281. The foregoing description of Dell’s infringement is based on publicly available information. LiTL reserves the right to modify this description, including, for example, on the basis of information about the Accused Products that it obtains during discovery.

282. LiTL has been and is being irreparably harmed, and has incurred and will continue to incur damages, as a result of Dell's infringement of the '888 patent.

283. Dell's infringement of the '888 patent has damaged and continues to damage LiTL in an amount yet to be determined, of no less than a reasonable royalty.

REQUEST FOR RELIEF

WHEREFORE, Plaintiff LiTL respectfully requests that this Court enter judgment as follows:

a. Declaring that Dell has infringed the '688, '844, '229, '154, '315, '715, '818, and '888 patents;

b. Granting a permanent injunction, enjoining Dell and its officers, agents, employees, attorneys, and all other persons acting in concert or participation with them, from further infringement of the '688, '844, '229, '154, '315, '715, '818, and '888 patents, including but not limited to the enjoining the manufacture, sale, offer for sale, importation or use of the Accused Products and any further development of the Accused Products;

c. Awarding LiTL damages adequate to compensate it for Dell's infringing activities, including supplemental damages for any post-verdict infringement up until entry of the final judgment with an accounting as needed, together with pre-judgment and post-judgment interest on the damages awarded;

d. Finding Dell's infringement of the '688 patent and '844 patent to be willful and awarding enhanced damages in an amount up to treble the amount of compensatory damages as justified under 35 U.S.C. § 284;

e. Finding this to be an exceptional case and awarding LiTL its attorneys' fees and costs under 35 U.S.C. § 285 as a result of Dell's willful infringement of the asserted patents; and

f. Awarding LiTL any such other and further relief as the Court deems just and proper.

DEMAND FOR JURY TRIAL

LiTL hereby demands a trial by jury on all issues so triable.

Date: May 8, 2023

OF COUNSEL:

Michael A. Albert
Eric J. Rutt
Gerald B. Hrycyszyn
Suresh S. Rav
Jason W. Balich
Jie Xiang
WOLF, GREENFIELD & SACKS, P.C.
600 Atlantic Avenue
Boston, MA 02210
617.646.8000 Phone
617.646.8646 Fax

YOUNG CONAWAY STARGATT
& TAYLOR, LLP

/s/Adam W. Poff
Adam W. Poff (#3990)
Robert M. Vrana
(#5666) Rodney Square
1000 North King Street
Wilmington, DE 19801
(302) 571-6600
apoff@ycst.com
rvrana@ycst.com

Counsel for LiTL LLC

30356126.1

EXHIBIT A

US008289688B2

(12) **United States Patent**
Behar et al.

(10) **Patent No.: US 8,289,688 B2**
(45) **Date of Patent: Oct. 16, 2012**

(54) **PORTABLE COMPUTER WITH MULTIPLE DISPLAY CONFIGURATIONS**

(75) Inventors: **Yves Behar**, Oakland, CA (US); **Joshua Morenstein**, San Francisco, CA (US); **Christopher Hibmacronan**, Oakland, CA (US); **Naoya Edahiro**, San Francisco, CA (US); **Matthew David Day**, San Francisco, CA (US)

(73) Assignee: **LiTL, LLC**, Boston, MA (US)

(*) Notice: Subject to any disclaimer, the term of this patent is extended or adjusted under 35 U.S.C. 154(b) by 182 days.

(21) Appl. No.: **12/170,939**

(22) Filed: **Jul. 10, 2008**

(65) **Prior Publication Data**

US 2009/0244832 A1 Oct. 1, 2009

Related U.S. Application Data

(60) Provisional application No. 61/041,365, filed on Apr. 1, 2008.

(51) **Int. Cl.**
G06F 1/16 (2006.01)
H05K 5/00 (2006.01)
H05K 7/00 (2006.01)

(52) **U.S. Cl.** **361/679.3**; 361/679.27; 455/575.3

(58) **Field of Classification Search** 361/679.21, 361/679.26, 679.27; 455/575.1–575.4; 345/168
See application file for complete search history.

(56) **References Cited**

U.S. PATENT DOCUMENTS

3,468,576	A		9/1969	Beyer et al.
4,939,514	A		7/1990	Miyazaki
D333,636	S		3/1993	Issa
5,200,913	A		4/1993	Hawkins et al.
5,268,817	A		12/1993	Miyagawa et al.
5,436,954	A		7/1995	Nishiyama et al.
5,515,345	A		5/1996	Barreira
5,712,760	A		1/1998	Coulon
D391,927	S		3/1998	Faranda
D392,944	S		3/1998	Issa
D395,868	S		7/1998	Iino
5,790,371	A	*	8/1998	Latocha et al. 361/679.32
5,793,355	A		8/1998	Youens
5,796,575	A		8/1998	Podwalny et al.

(Continued)

FOREIGN PATENT DOCUMENTS

DE 19952486 5/2001

(Continued)

OTHER PUBLICATIONS

http://laptop.org/en/laptop/start/ebook.shtml accessed on Sep. 29, 2008.

(Continued)

Primary Examiner — Adrian S Wilson

(57) **ABSTRACT**

A portable computer that is configurable between a plurality of display modes including a laptop mode (in which the portable computer has a conventional laptop appearance) and an easel mode in which the base of the computer and its display component stand vertically forming an inverted "V." The portable computer includes a hinge assembly that couples the display component to the base of the computer, and allows the display component to be rotated about an axis along an interface between the display component and the base to configure the portable computer between a closed position, the laptop mode and the easel mode. The portable computer further comprises a scroll wheel and optional navigation buttons that permit a user to control or manipulate various aspects of operation of the portable computer (such as volume or display brightness) and/or content displayed the computer.

32 Claims, 25 Drawing Sheets

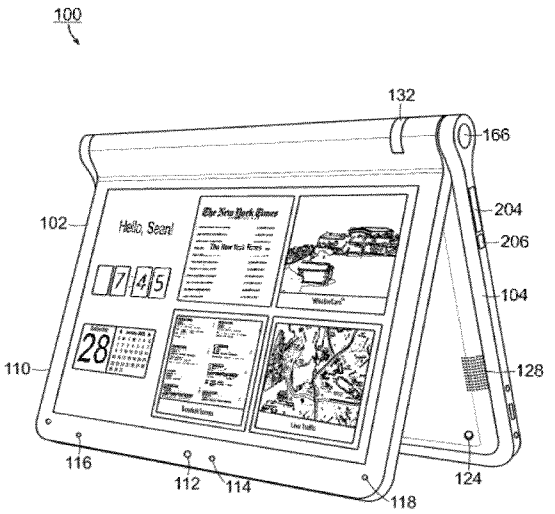

U.S. PATENT DOCUMENTS

D399,526	S	10/1998	Brady	
5,825,352	A	10/1998	Bisset et al.	
5,841,631	A	11/1998	Shin et al.	
5,847,698	A	12/1998	Reavey	
5,900,848	A *	5/1999	Haneda et al.	345/1.1
5,926,364	A *	7/1999	Karidis	361/679.27
5,949,643	A	9/1999	Batio	
D416,003	S	11/1999	Schiefer et al.	
5,987,704	A *	11/1999	Tang	16/354
6,005,767	A *	12/1999	Ku et al.	361/679.27
6,067,224	A	5/2000	Nobuchi	
6,144,358	A *	11/2000	Narayanaswamy et al.	345/102
6,222,507	B1 *	4/2001	Gouko	345/1.1
6,223,393	B1	5/2001	Knopf	
6,262,885	B1	7/2001	Emma et al.	
6,266,236	B1 *	7/2001	Ku et al.	361/679.27
6,275,376	B1 *	8/2001	Moon	361/679.06
6,295,038	B1 *	9/2001	Rebeske	345/1.1
6,302,612	B1 *	10/2001	Fowler et al.	403/76
6,323,846	B1	11/2001	Westerman et al.	
D452,238	S	12/2001	Sugano	
6,327,482	B1 *	12/2001	Miyashita	455/566
6,341,061	B1 *	1/2002	Eisbach et al.	361/679.46
6,343,006	B1 *	1/2002	Moscovitch et al.	361/679.04
6,377,444	B1	4/2002	Price et al.	
D462,069	S	8/2002	Gatto	
6,437,974	B1 *	8/2002	Liu	361/679.27
D463,797	S	10/2002	Andre	
6,464,195	B1	10/2002	Hildebrandt	
6,492,974	B1 *	12/2002	Nobuchi et al.	345/156
6,510,049	B2	1/2003	Rosen	
D476,326	S	6/2003	Tanimura	
D479,708	S	9/2003	Hwang	
6,628,267	B2 *	9/2003	Karidis et al.	345/168
6,642,909	B1	11/2003	Oliva	
6,659,516	B2 *	12/2003	Wang et al.	292/251.5
6,661,426	B1	12/2003	Jetha	
6,665,175	B1	12/2003	deBoer	
6,697,055	B1	2/2004	Bullister	
D491,177	S	6/2004	Andre	
D491,936	S	6/2004	Jao	
D494,162	S	8/2004	Kondo	
6,771,494	B2 *	8/2004	Shimano	361/679.06
D495,674	S	9/2004	Yoo	
D495,694	S	9/2004	Chase	
6,788,527	B2	9/2004	Doczy et al.	
6,819,304	B2 *	11/2004	Branson	345/1.3
6,829,140	B2 *	12/2004	Shimano et al.	361/679.09
6,859,219	B1 *	2/2005	Sall	345/1.1
D504,128	S	4/2005	Maskatia	
6,882,335	B2 *	4/2005	Saarinen	345/156
6,944,012	B2	9/2005	Doczy et al.	
6,963,485	B2	11/2005	Hong	
D512,997	S	12/2005	Lee	
D513,509	S	1/2006	Kawa	
D516,552	S	3/2006	Iseki	
D517,541	S	3/2006	Maskatia	
D518,042	S	3/2006	Kanayama	
7,035,665	B2	4/2006	Kido et al.	
D523,429	S	6/2006	Lin	
7,061,472	B1 *	6/2006	Schweizer et al.	345/168
7,072,179	B1	7/2006	Curran et al.	
D528,541	S	9/2006	Maskatia	
D528,993	S	9/2006	Wilson	
7,138,962	B2 *	11/2006	Koenig	345/1.3
D534,531	S	1/2007	Ogasawara	
D535,292	S	1/2007	Shi	
D544,846	S	6/2007	Kindle	
7,239,508	B2	7/2007	Ferrucei	
7,250,207	B1	7/2007	Heal et al.	
7,428,142	B1 *	9/2008	Ligtenberg et al.	361/679.55
D581,371	S	11/2008	Richmond	
7,467,356	B2	12/2008	Gettman et al.	
7,522,946	B2	4/2009	Im	
D593,085	S	5/2009	Behar et al.	
D593,086	S	5/2009	Behar et al.	
D593,091	S	5/2009	Behar et al.	
D605,635	S	12/2009	Edahiro et al.	
7,698,407	B2	4/2010	Mattox, Jr. et al.	
7,869,834	B2	1/2011	Seol et al.	
2002/0005818	A1 *	1/2002	Bruzzone	345/6
2002/0010707	A1	1/2002	Chang	
2002/0021258	A1 *	2/2002	Koenig	345/1.1
2003/0048595	A1	3/2003	Hsieh	
2003/0107603	A1	6/2003	Clapper	
2003/0109232	A1	6/2003	Park	
2004/0001049	A1	1/2004	Oakley	
2004/0203535	A1	10/2004	Kim	
2004/0228076	A1	11/2004	Clapper	
2005/0018396	A1	1/2005	Nakajima	
2005/0041378	A1	2/2005	Hamada	
2005/0063145	A1	3/2005	Homer	
2005/0083642	A1	4/2005	Senpuku et al.	
2005/0128695	A1	6/2005	Han	
2005/0146845	A1 *	7/2005	Moscovitch	361/681
2005/0210399	A1	9/2005	Filner	
2005/0221865	A1	10/2005	Nishiyama et al.	
2005/0257400	A1	11/2005	Sommerer	
2005/0282596	A1	12/2005	Park	
2006/0126284	A1 *	6/2006	Moscovitch	361/681
2006/0238439	A1	10/2006	Fuller et al.	
2006/0264243	A1 *	11/2006	Aarras	455/566
2006/0268500	A1 *	11/2006	Kuhn	361/683
2007/0138806	A1	6/2007	Ligtenberg et al.	
2007/0182663	A1 *	8/2007	Biech	345/1.1
2007/0242421	A1 *	10/2007	Goschin et al.	361/681
2007/0247446	A1	10/2007	Orsley et al.	
2008/0024388	A1 *	1/2008	Bruce	345/1.1
2008/0024465	A1	1/2008	Hawkins et al.	
2008/0042987	A1	2/2008	Westerman et al.	
2008/0062625	A1 *	3/2008	Batio	361/680
2008/0158795	A1 *	7/2008	Aoki et al.	361/681
2008/0284738	A1 *	11/2008	Hovden et al.	345/173
2009/0190295	A1 *	7/2009	Chin et al.	361/679.27
2009/0244012	A1	10/2009	Behar	
2009/0275366	A1 *	11/2009	Schilling	455/566
2009/0300511	A1	12/2009	Behar	
2009/0303676	A1	12/2009	Behar	
2009/0322790	A1	12/2009	Behar	
2010/0174993	A1	7/2010	Pennington	

FOREIGN PATENT DOCUMENTS

EP	0588210		3/1993
EP	0588210	A1	3/1994
KR	10-2000-0036647	A	7/2000

OTHER PUBLICATIONS

Office Action L2039-700111 dated Apr. 4, 2011, U.S. Appl. No. 12/170,951.

Miller, M., "Creating a Digital Home Entertainment System with Windows Media Center", Apr. 2006, Que.

Office Action dated Apr. 4, 2011, U.S. Appl. No. 12/170,951.

* cited by examiner

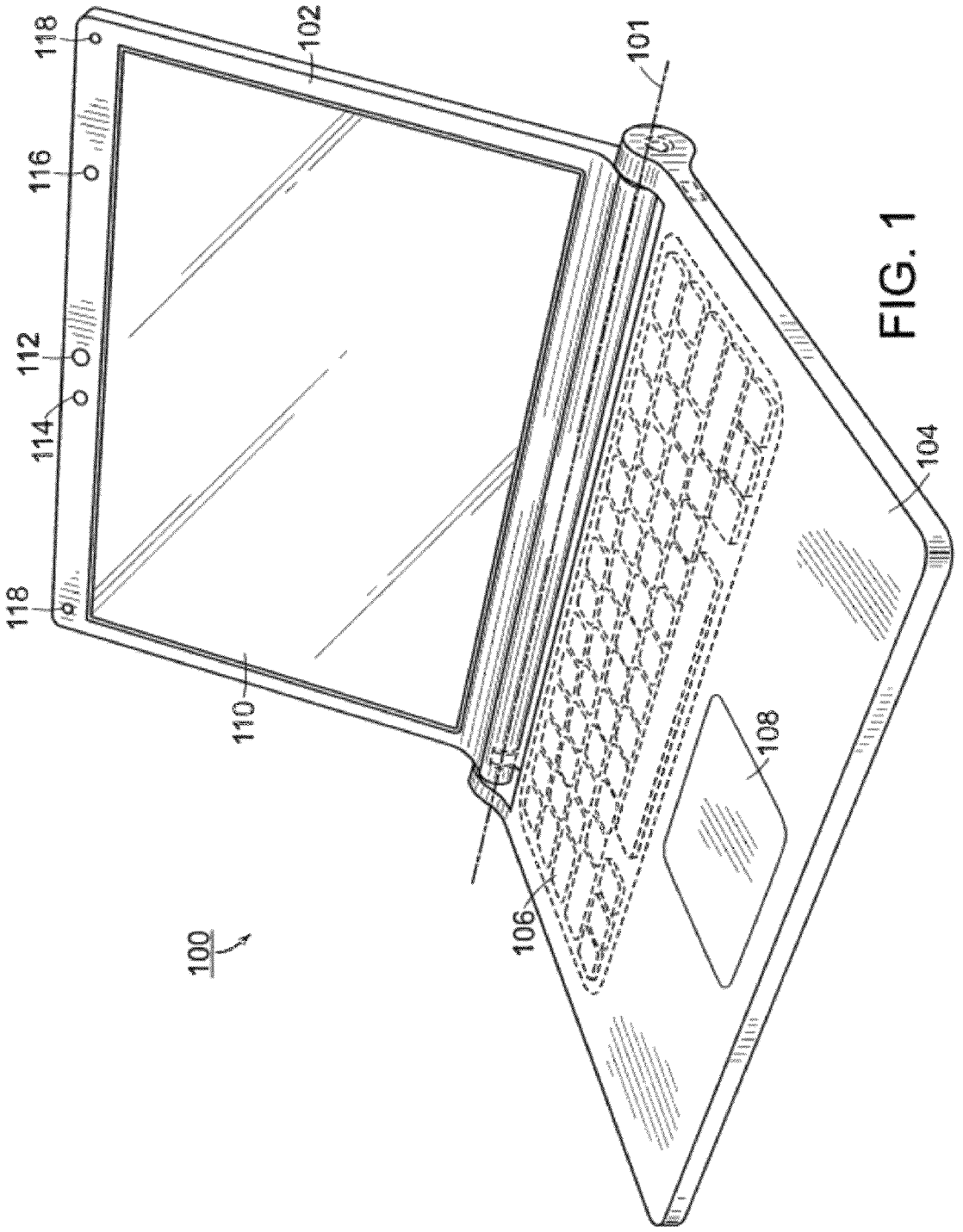

FIG. 1

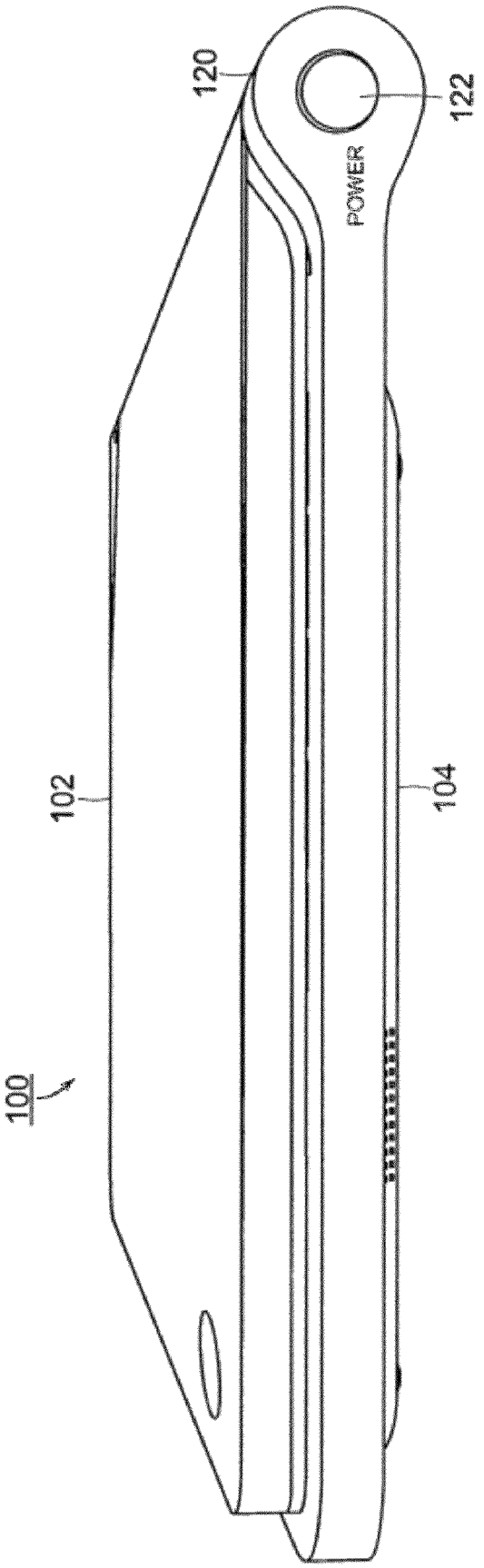

FIG. 2

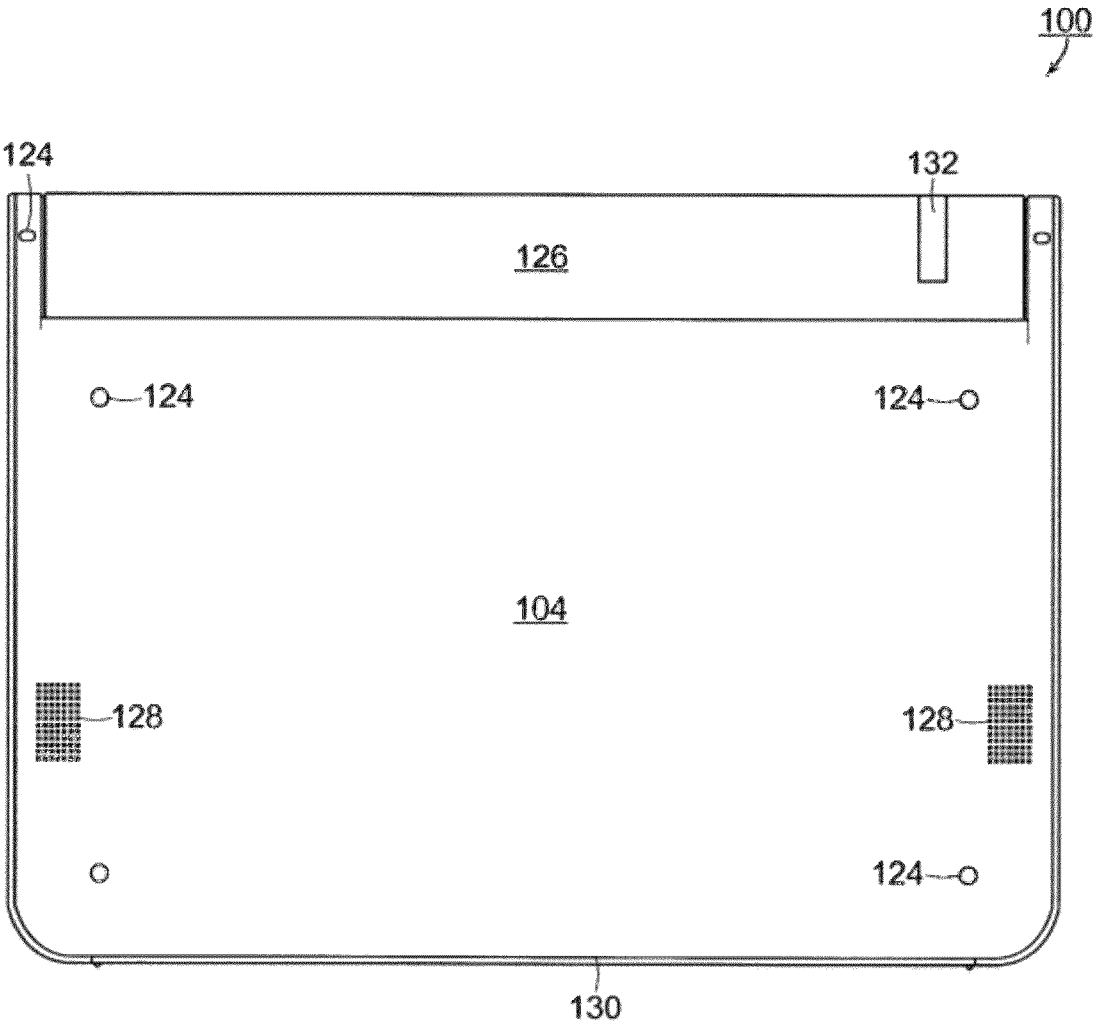

FIG. 3

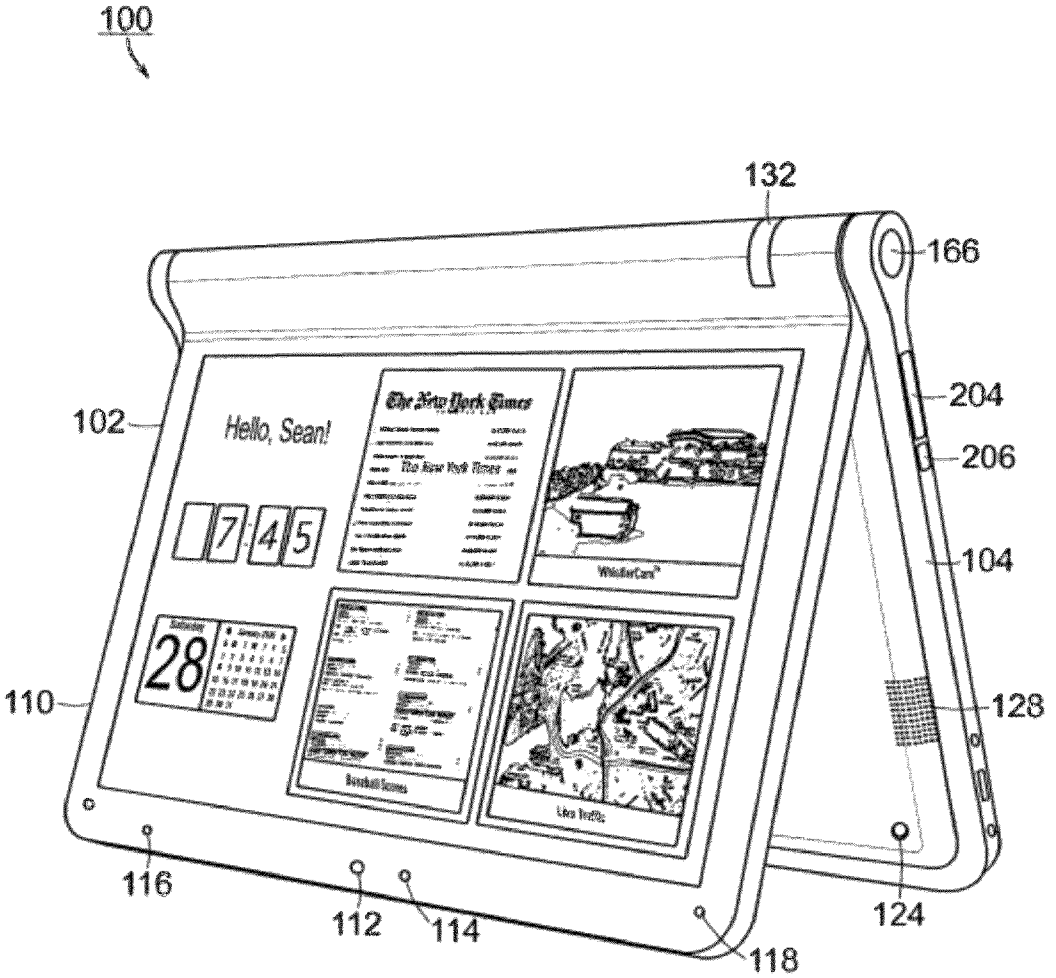
100
132
166
102
Hello, Sean!
The New York Times
7
4
5
28
204
206
104
110
128
116
112
114
124
118

FIG. 4

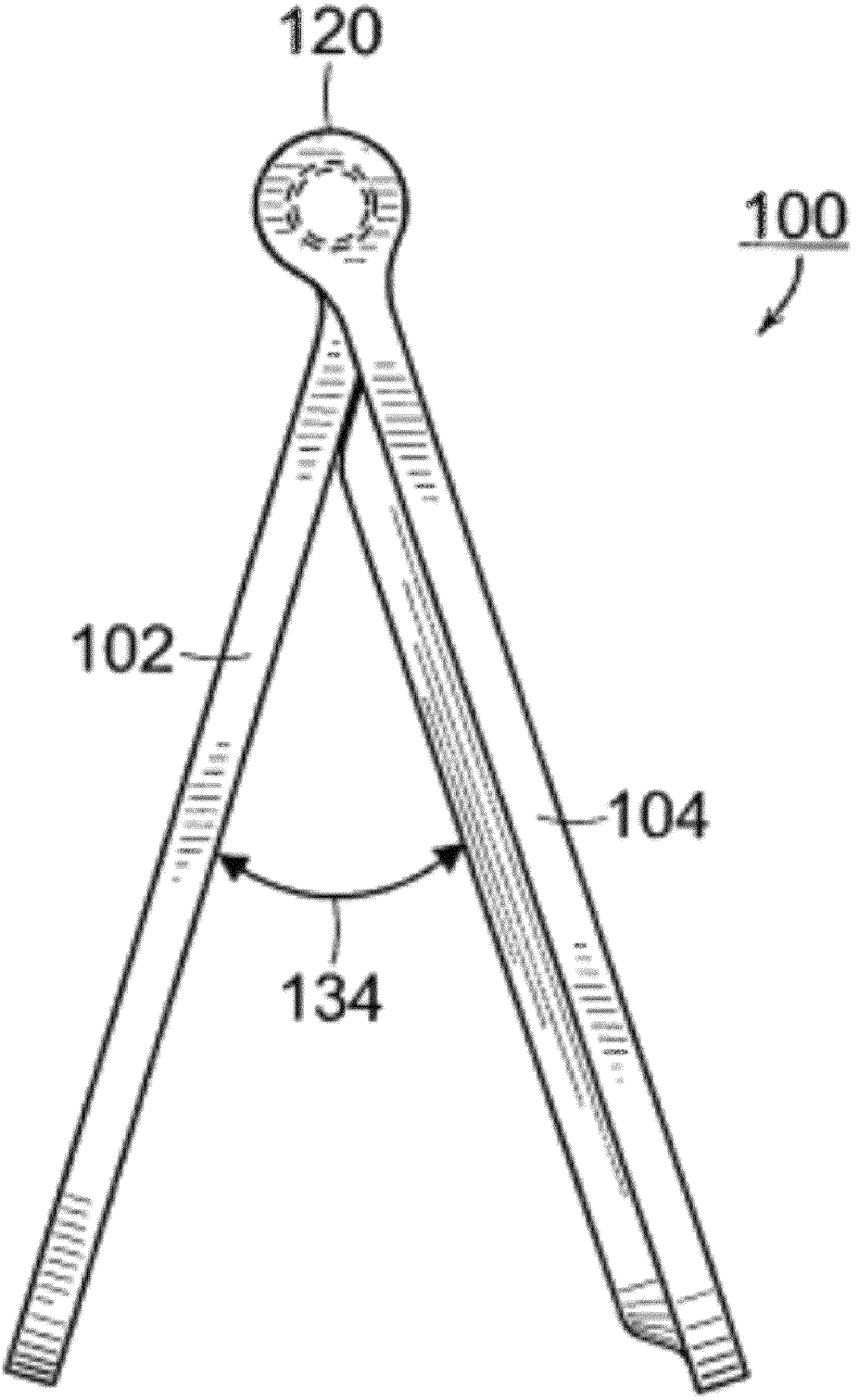

FIG. 5

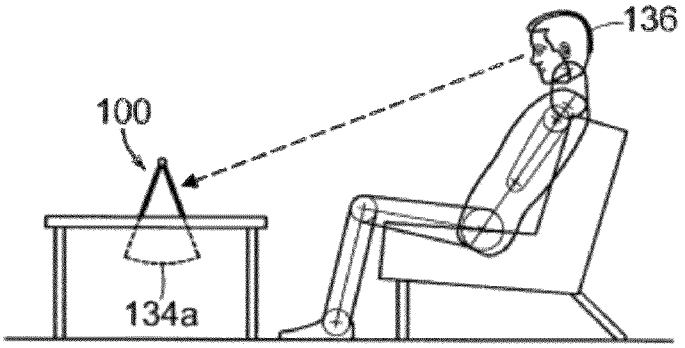

FIG. 6A

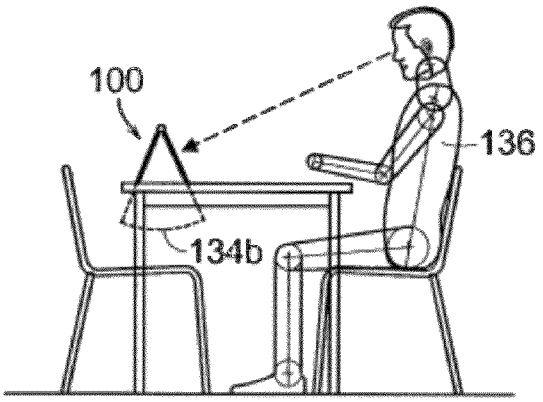

FIG. 6B

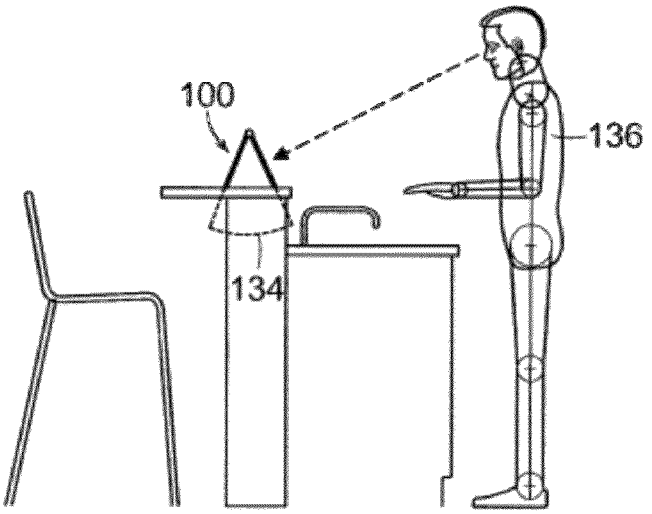

FIG. 6C

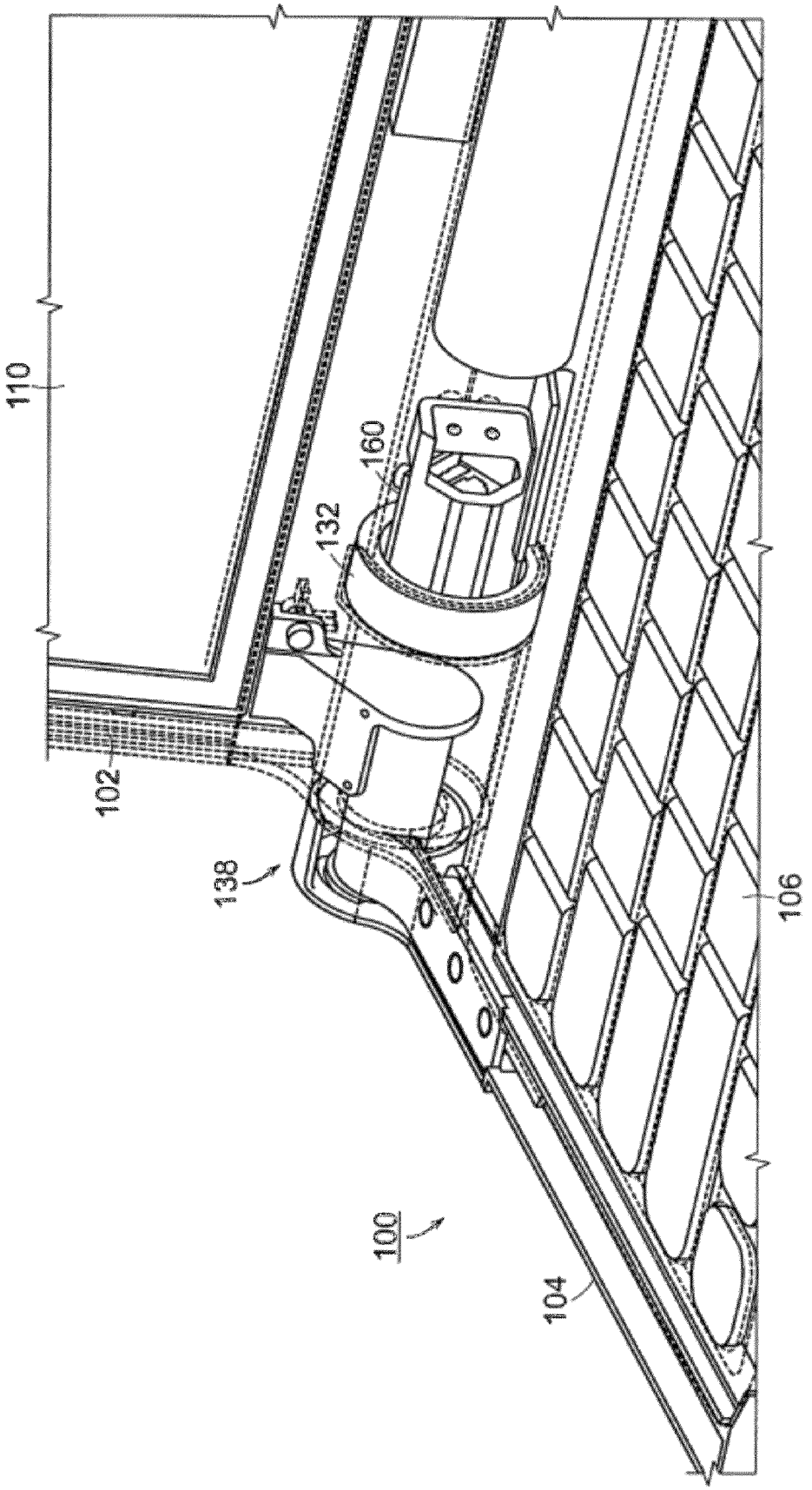

FIG. 7A

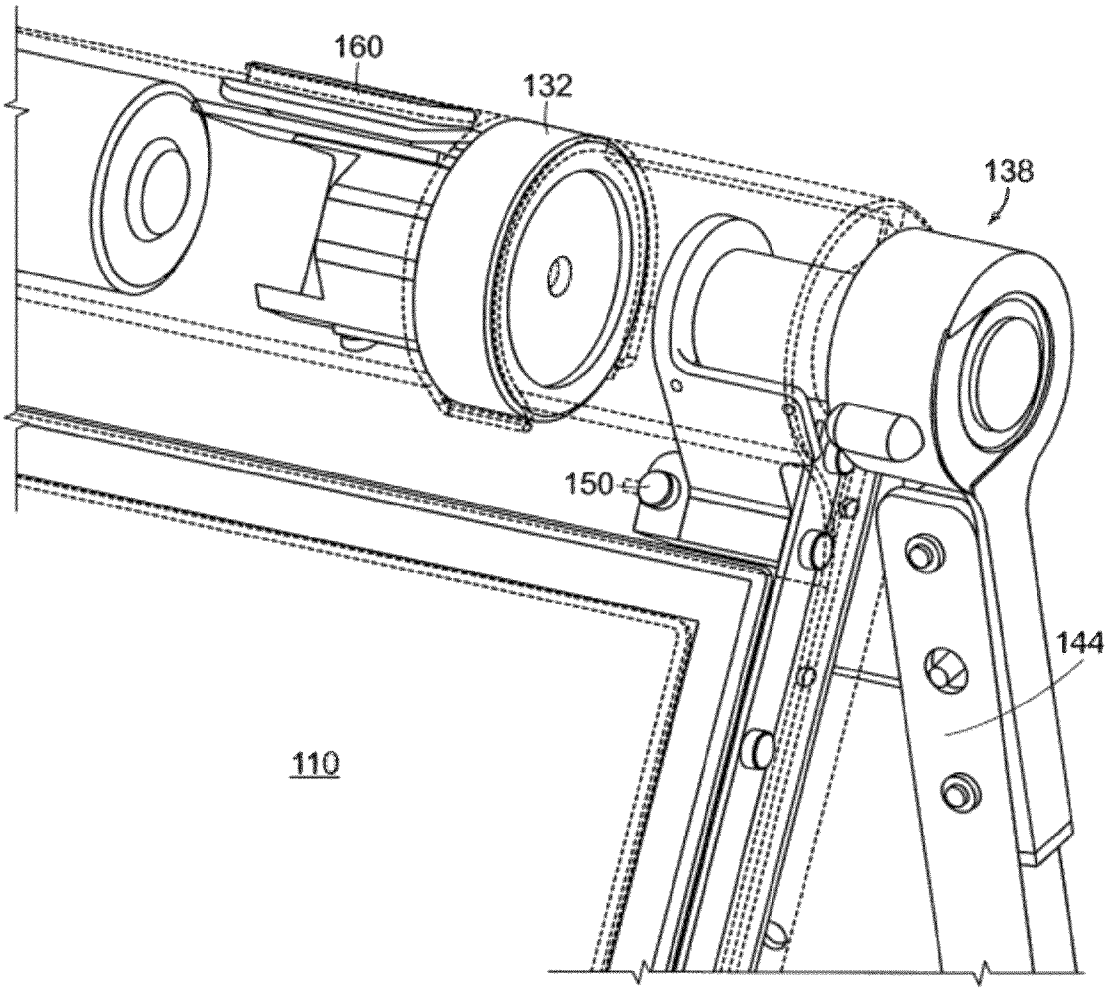

FIG. 7B

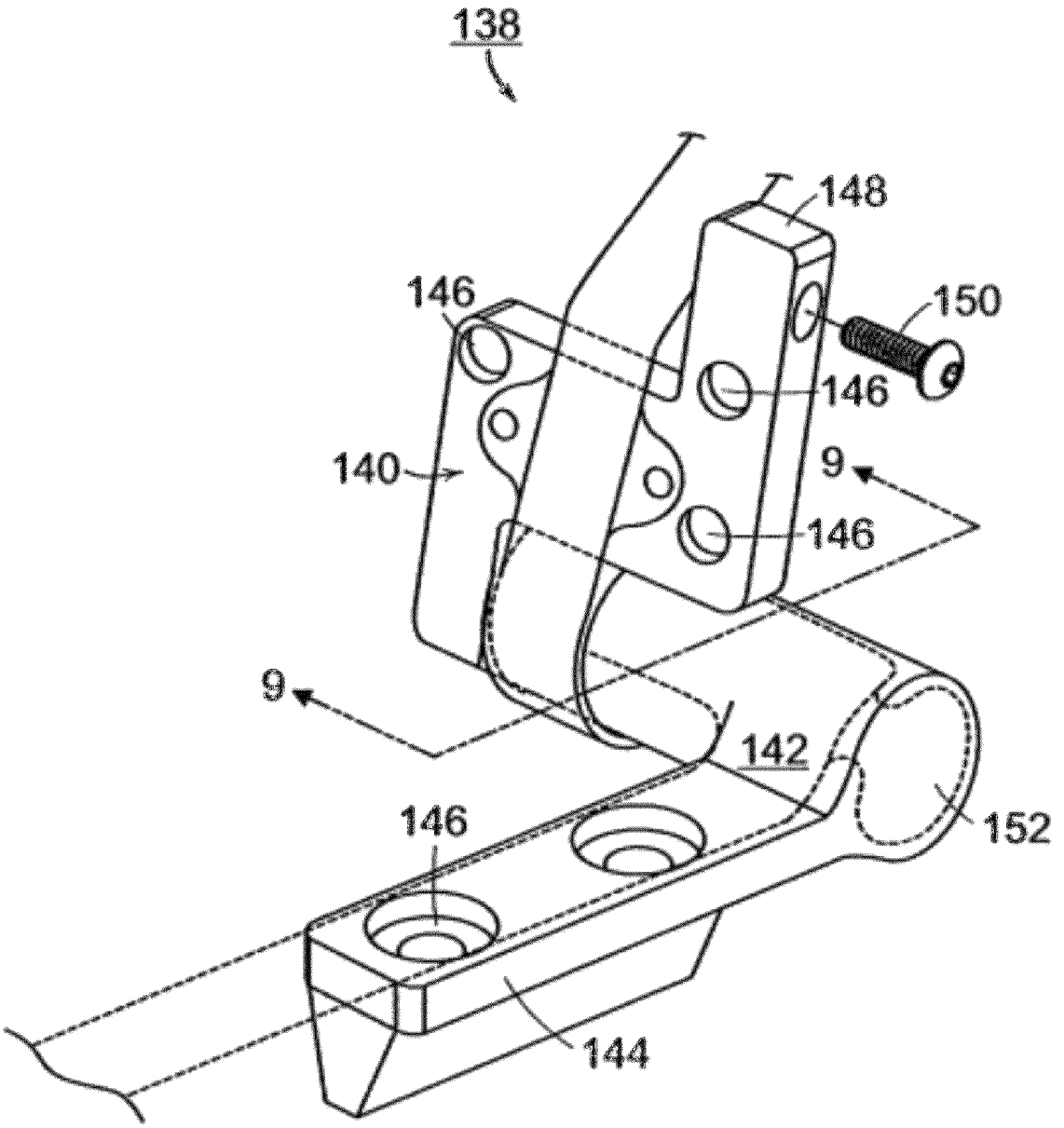

FIG. 8

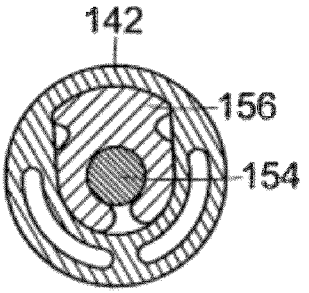

FIG. 9

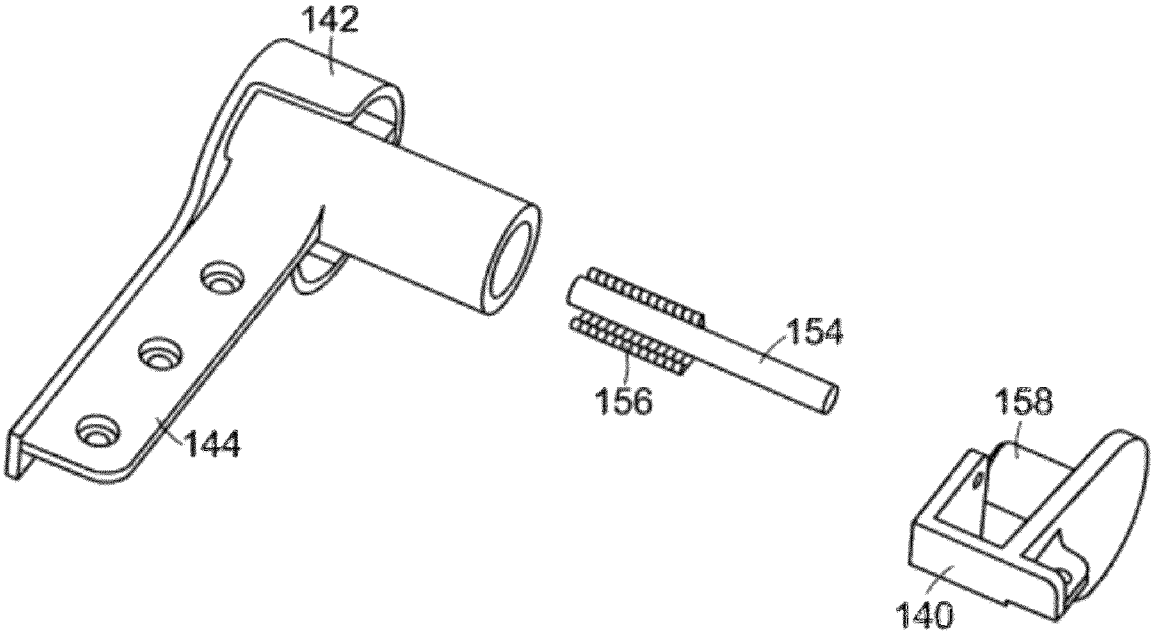

FIG. 10

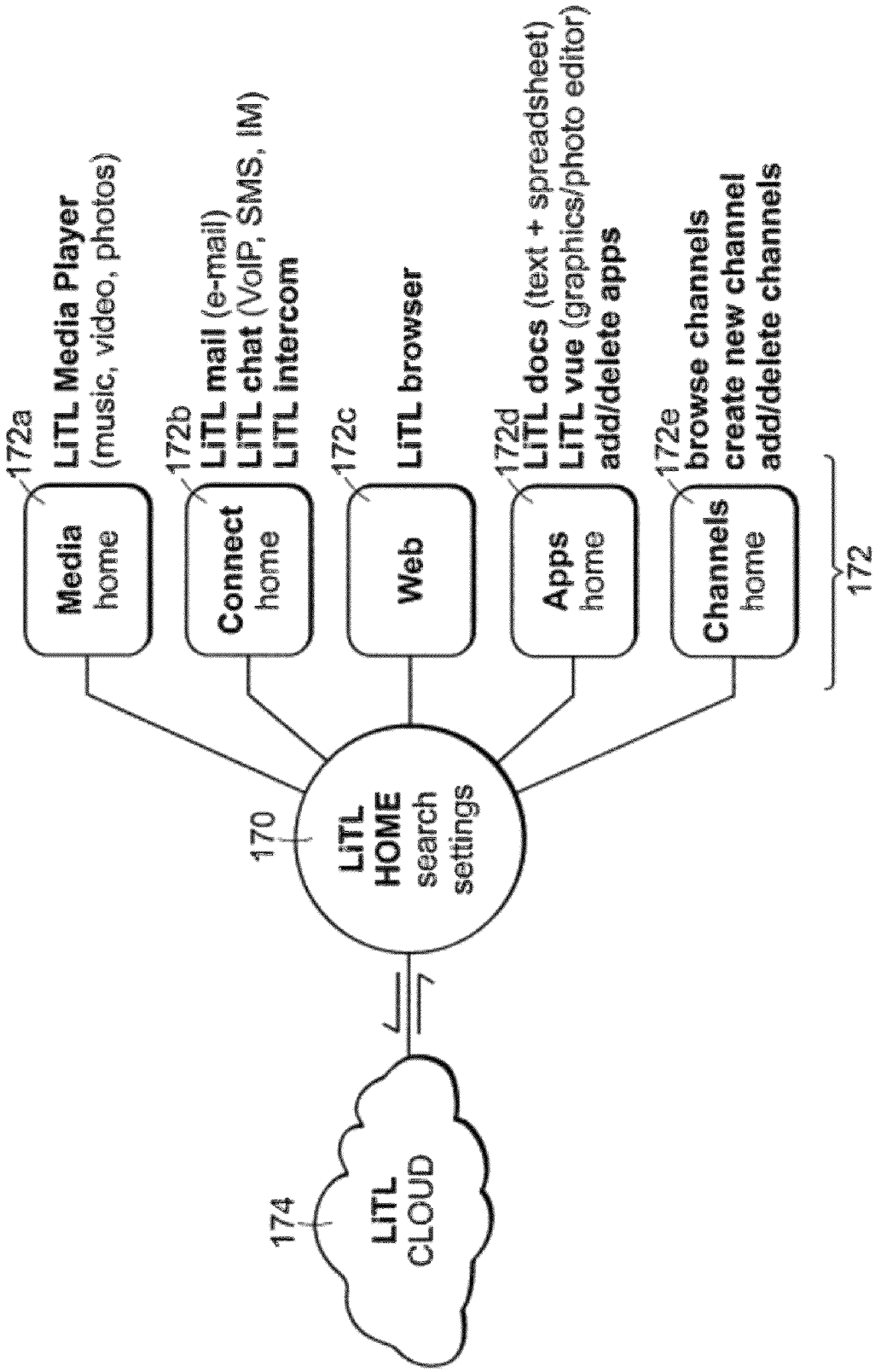
172a
LiTL Media Player
(music, video, photos)
Media
home
172b
LiTL mail (e-mail)
LiTL chat (VoIP, SMS, IM)
LiTL intercom
Connect
home
172c
LiTL browser
Web
172d
LiTL docs (text + spreadsheet)
LiTL vue (graphics/photo editor)
add/delete apps
Apps
home
172e
browse channels
create new channel
add/delete channels
Channels
home
172
170
LiTL
HOME
search
settings
174
LiTL
CLOUD

FIG. 11

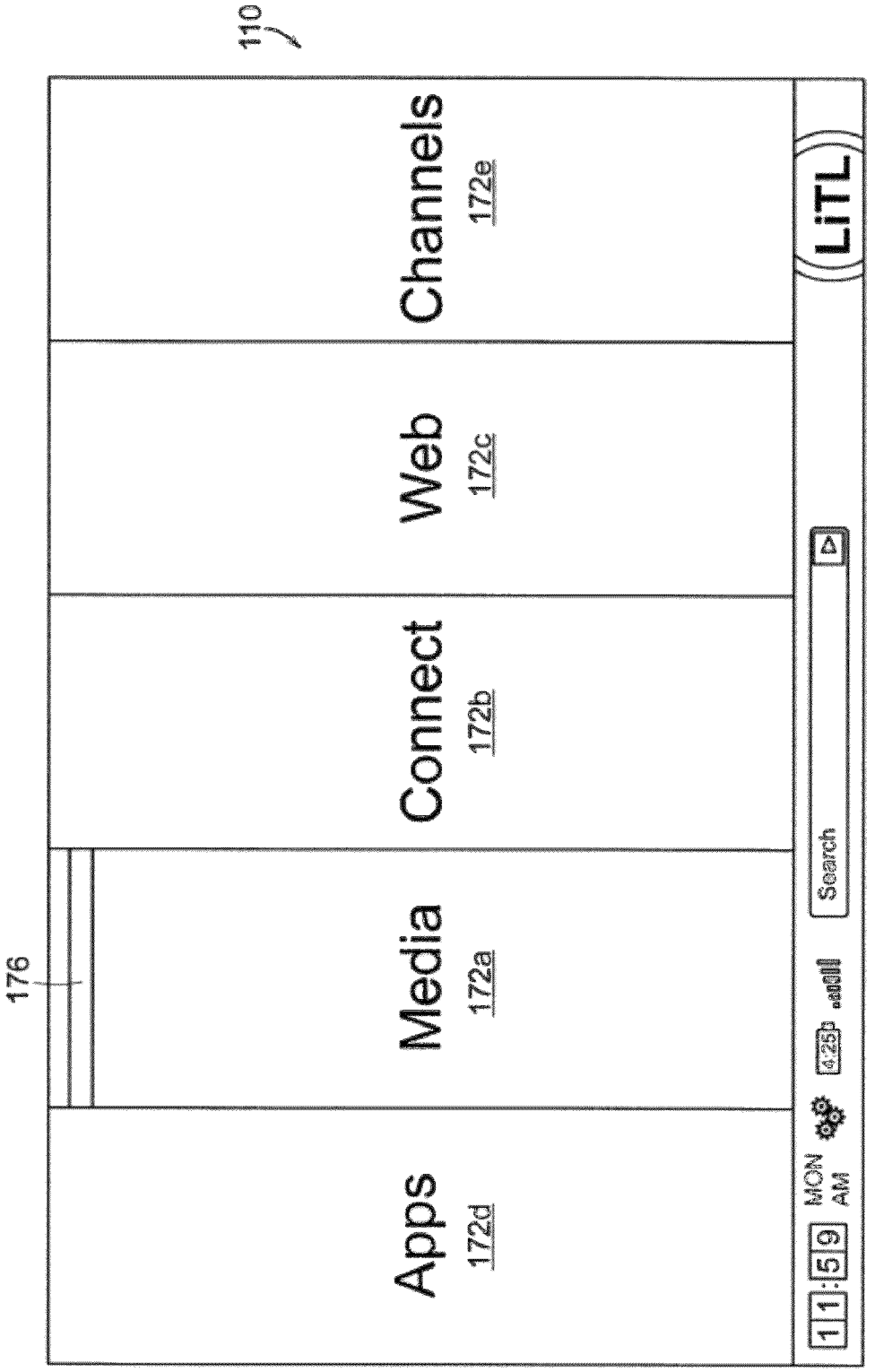
110
176
Apps
172d
Media
172a
Connect
172b
Web
172c
Channels
172e
11:59
MON
AM
4:25p
Search
LiTL

FIG. 12

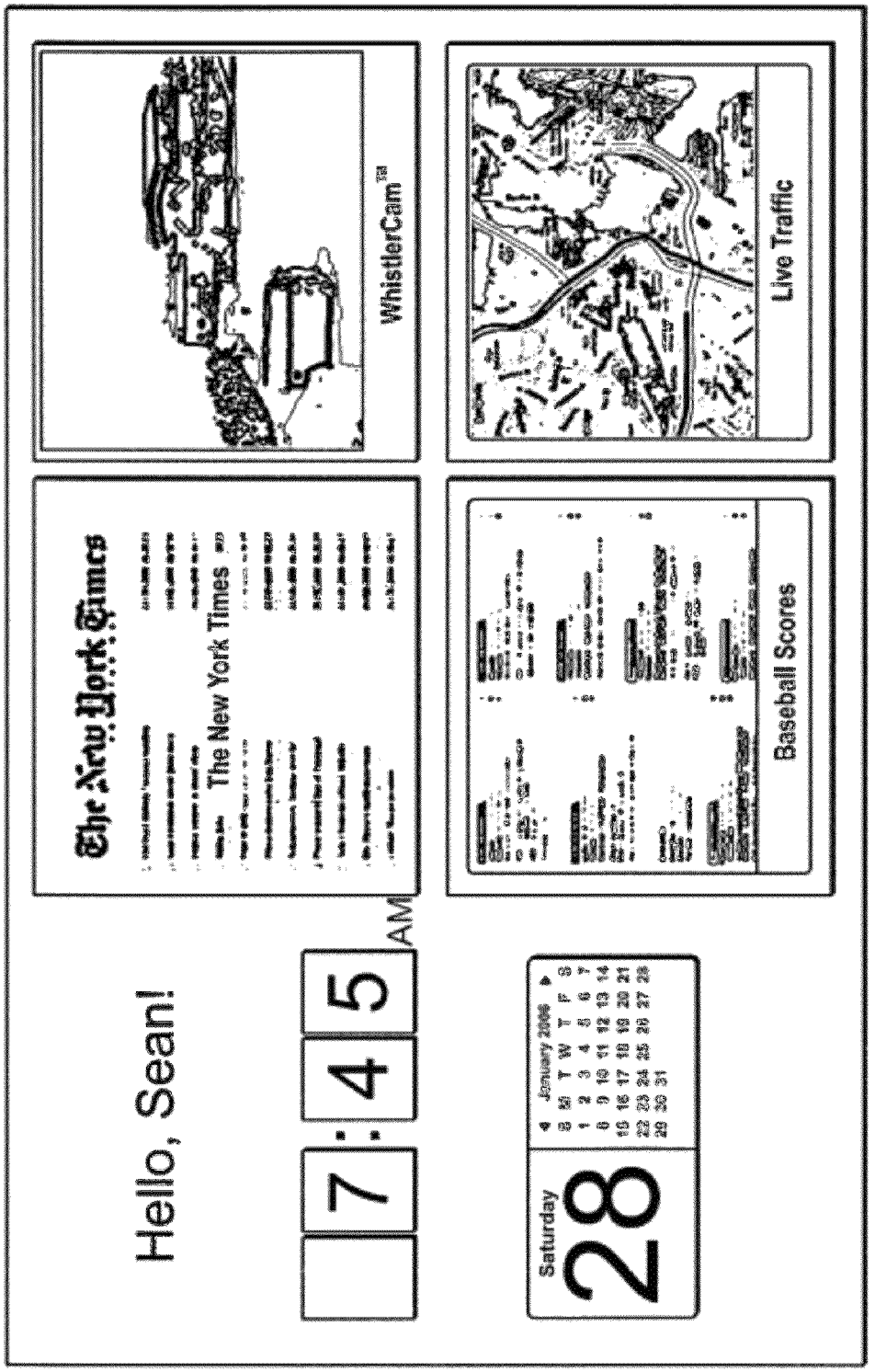
Hello, Sean!
7 : 4 5 AM
Saturday
28
January 2006
The New York Times
WhistlerCam™
Baseball Scores
Live Traffic

110

FIG. 13

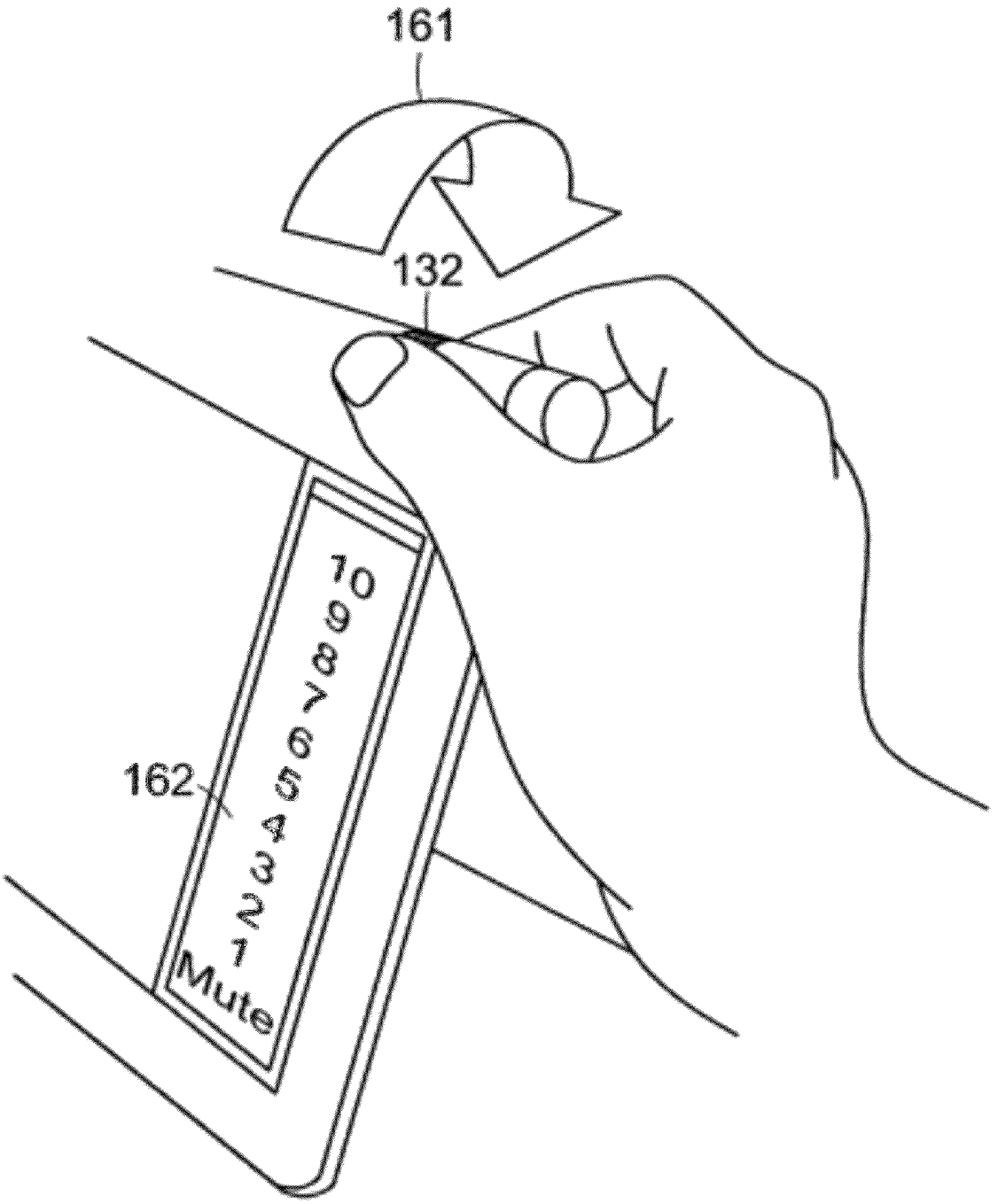

FIG. 14

FIG. 15

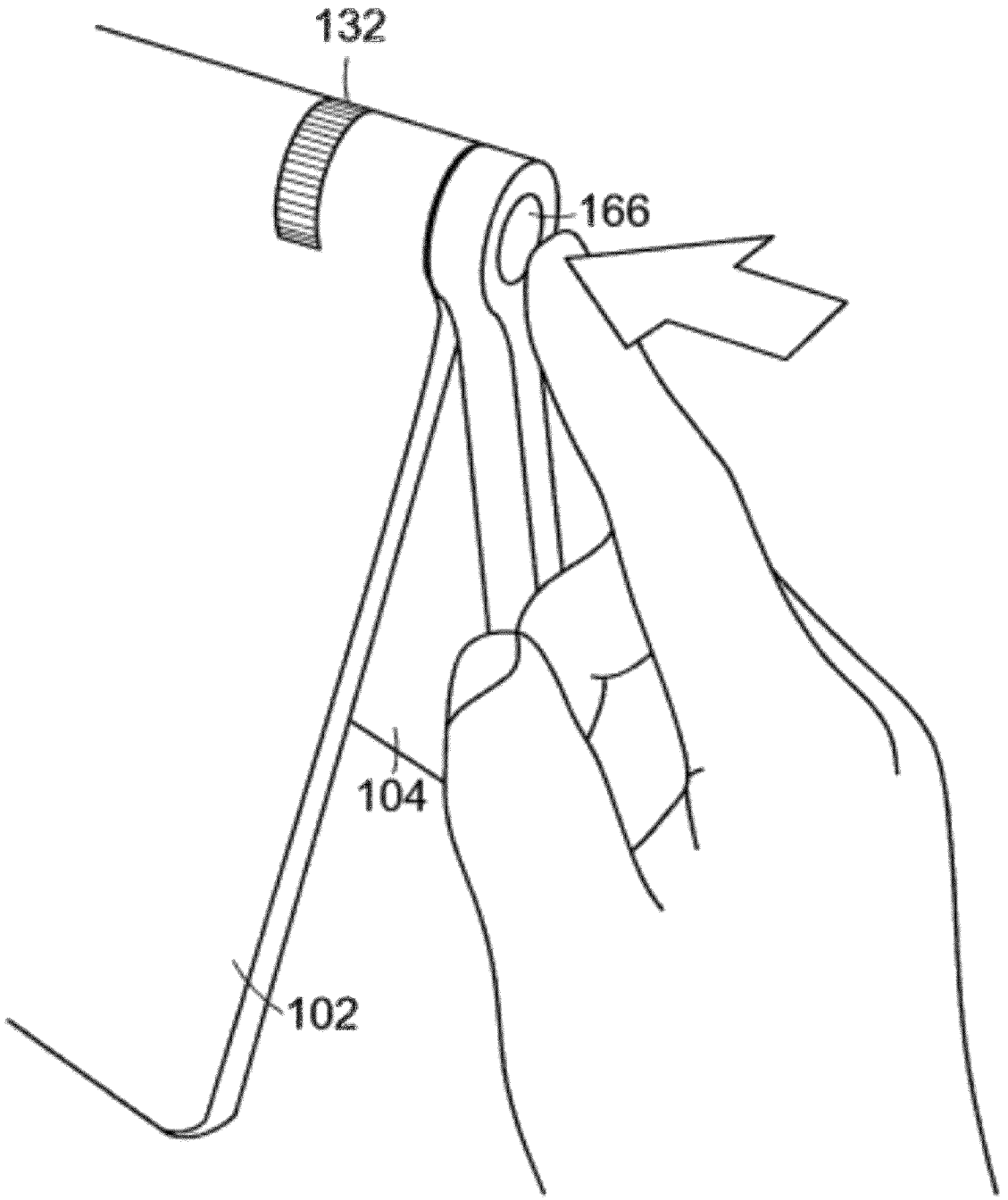

FIG. 16

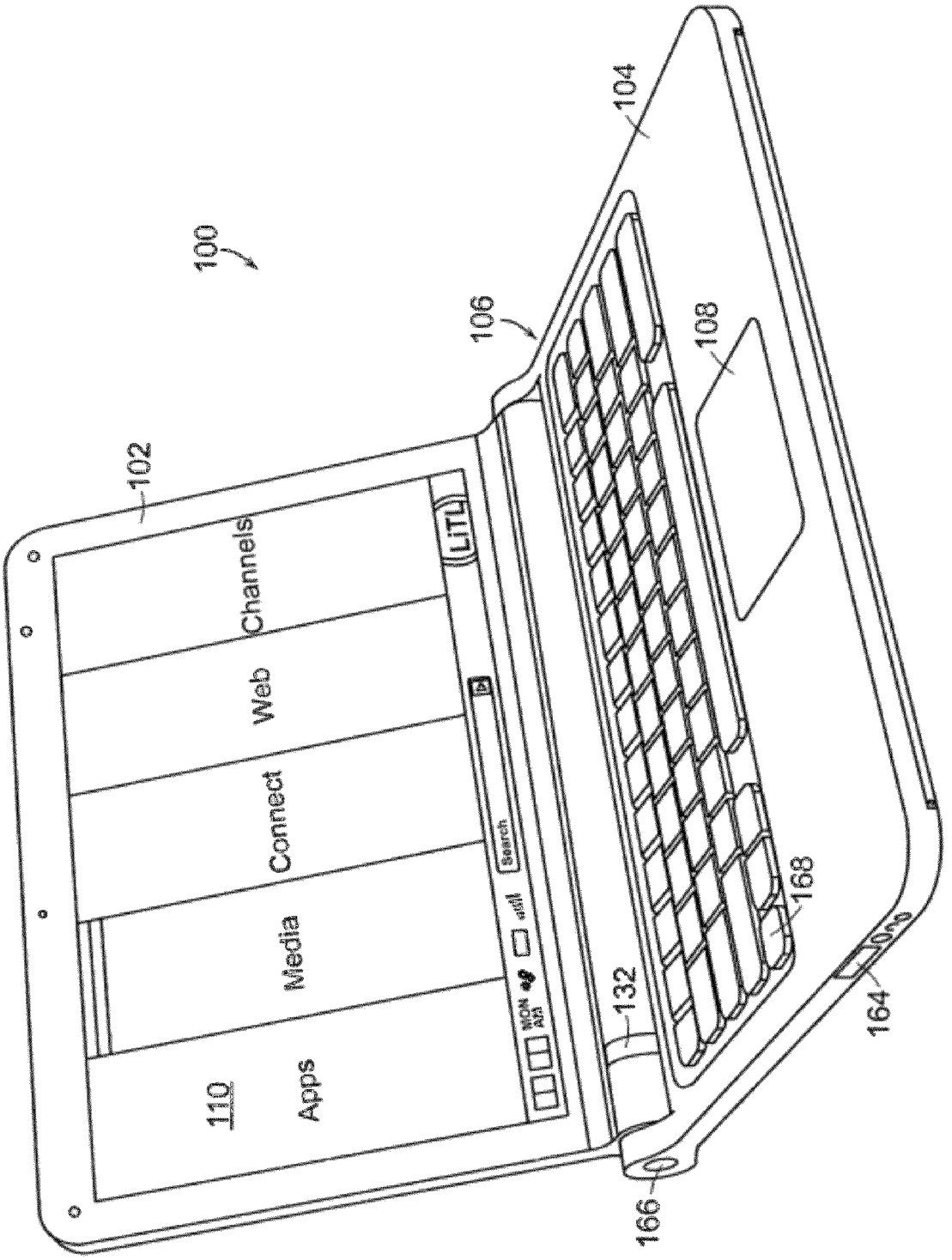
100
102
104
106
108
110
Apps
Media
Connect
Web
Channels
LiTL
Search
132
164
166
168

FIG. 17

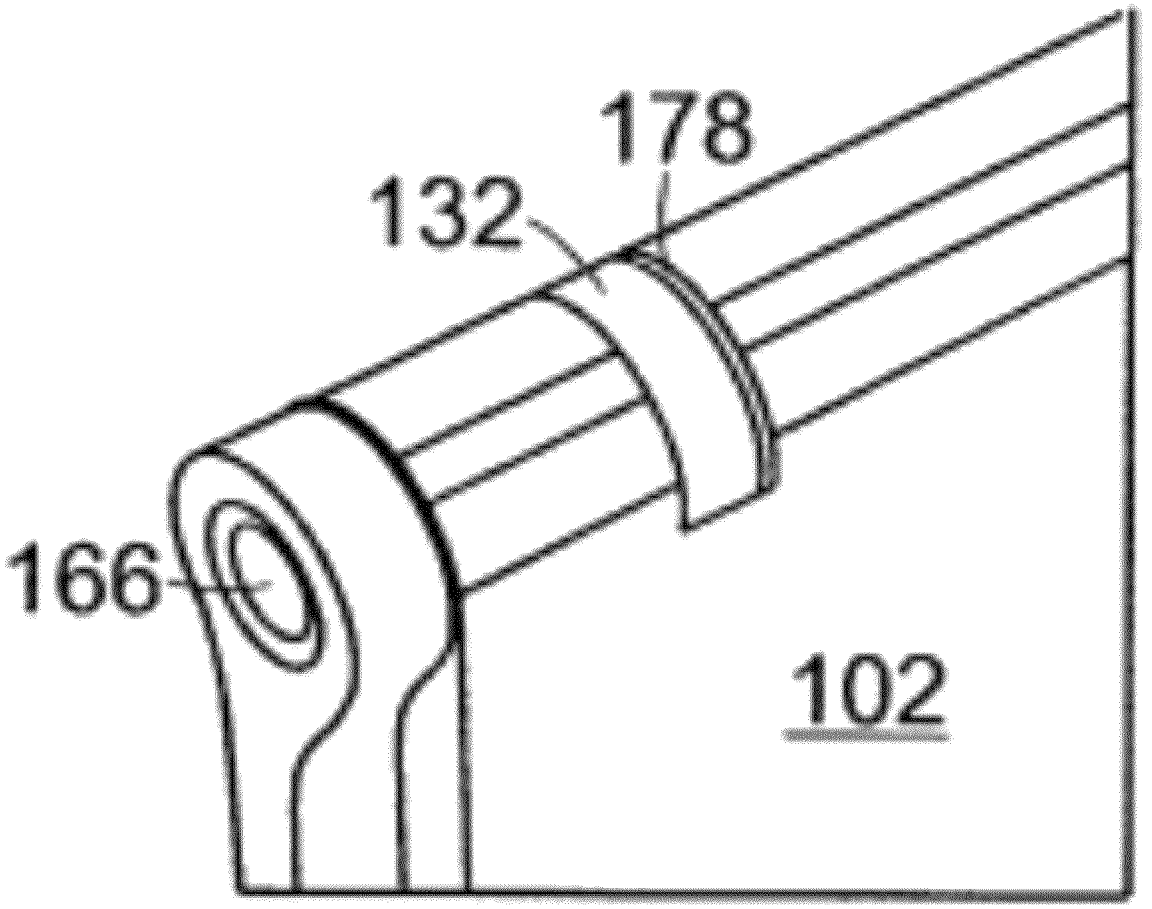

FIG. 18

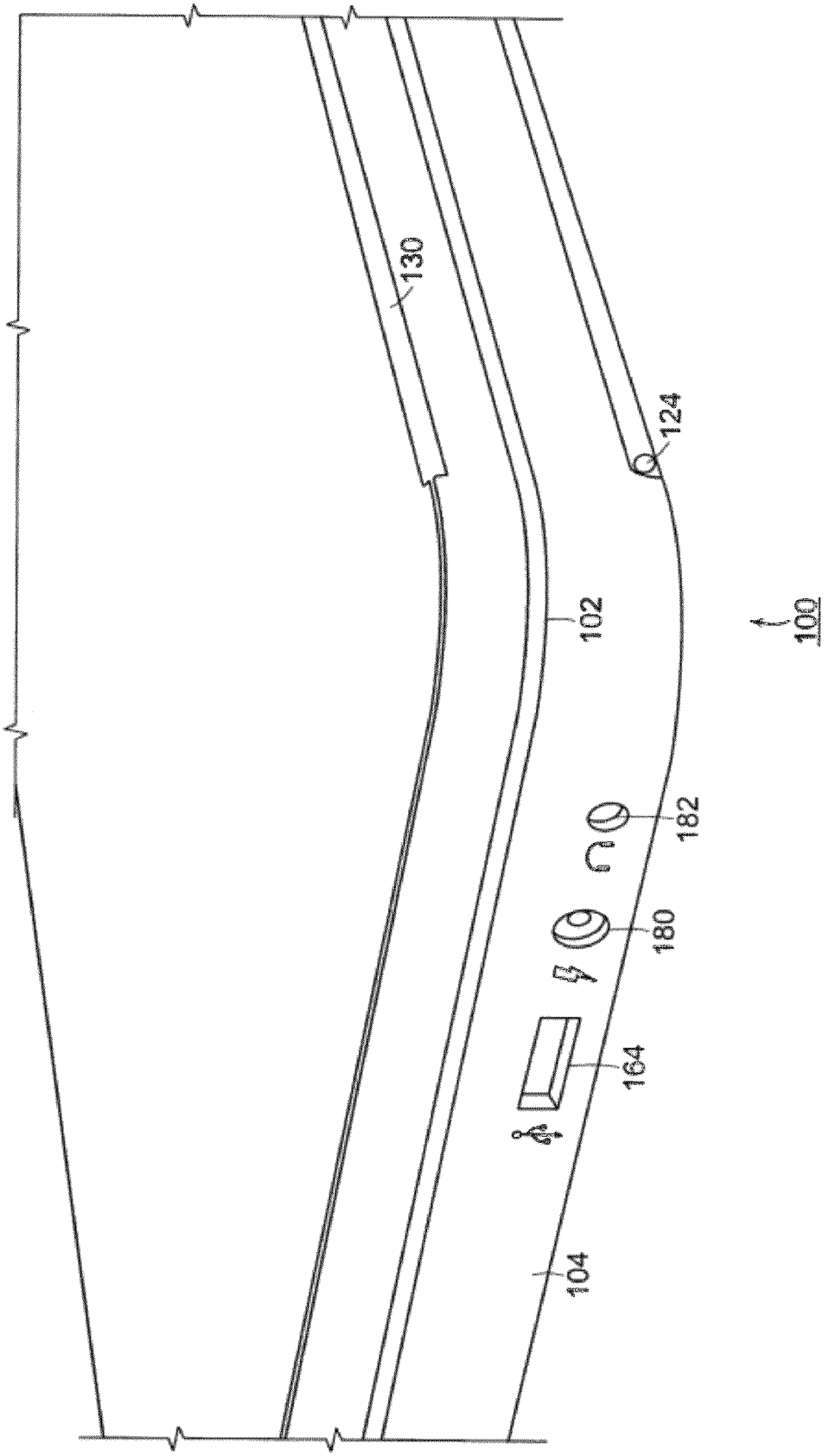

FIG. 19

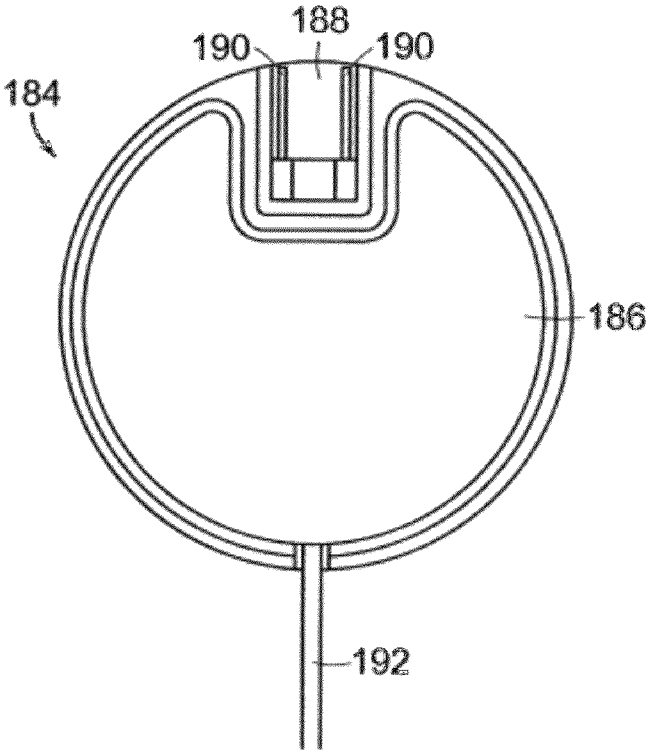

FIG. 20

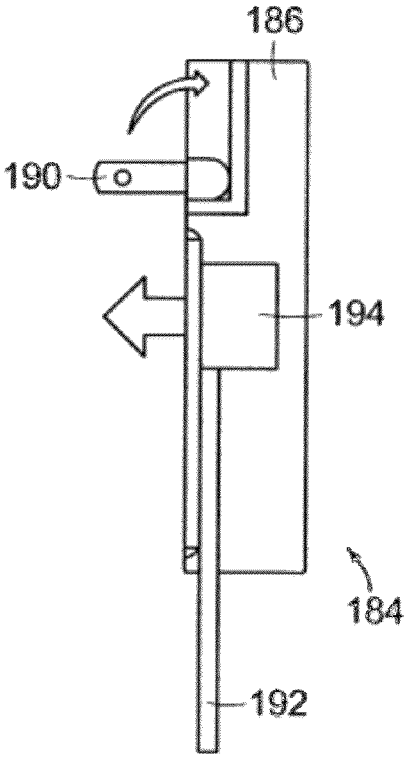

FIG. 21

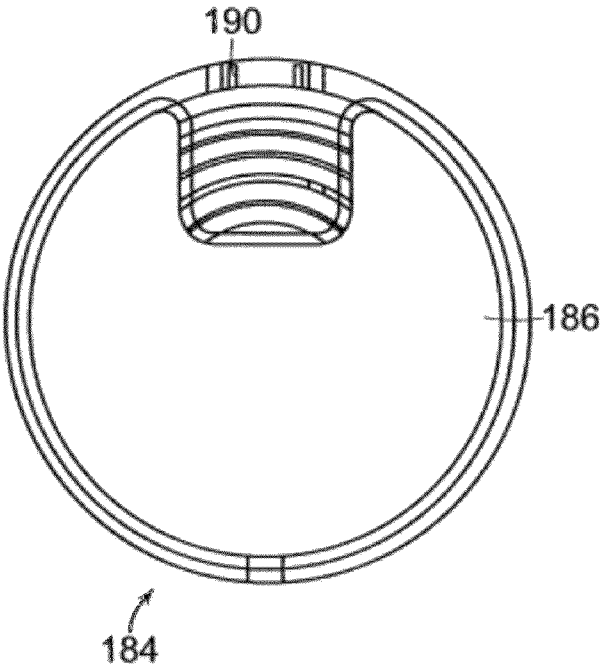

FIG. 22A

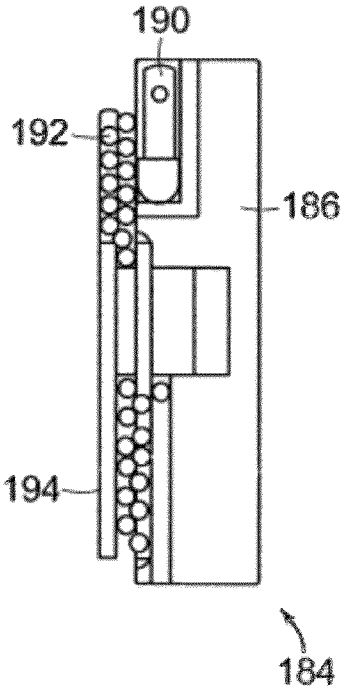

FIG. 22B

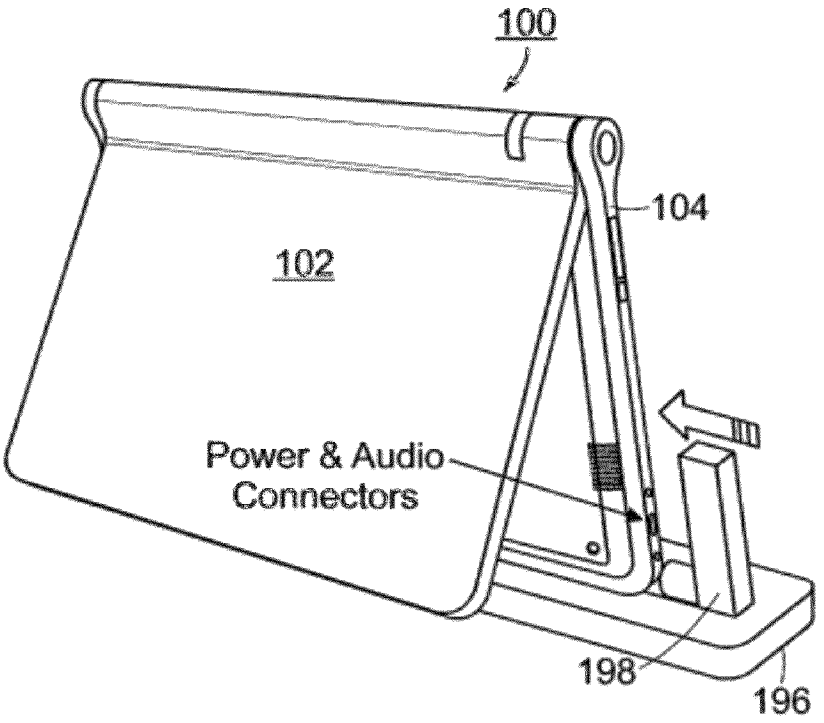

FIG. 23

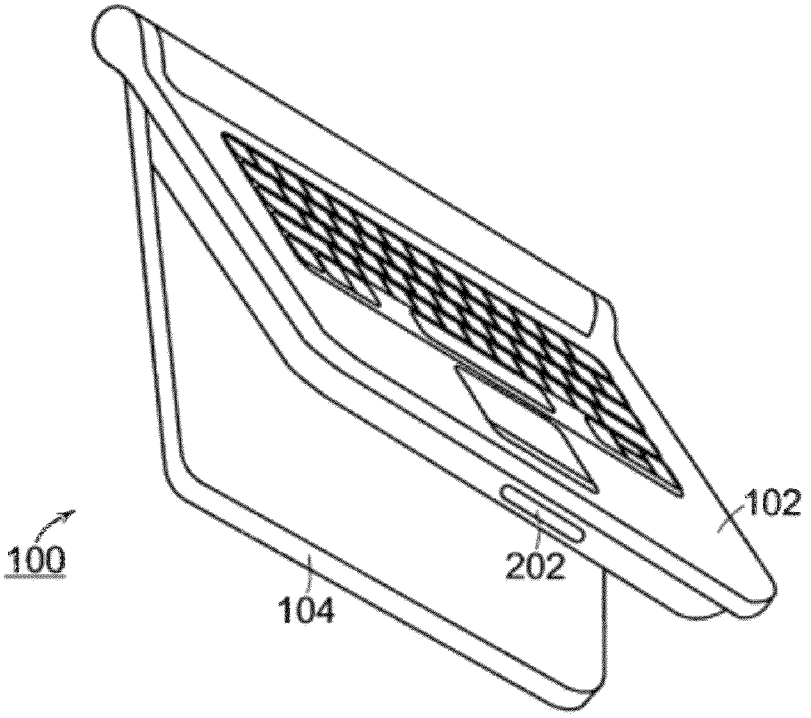

FIG. 24

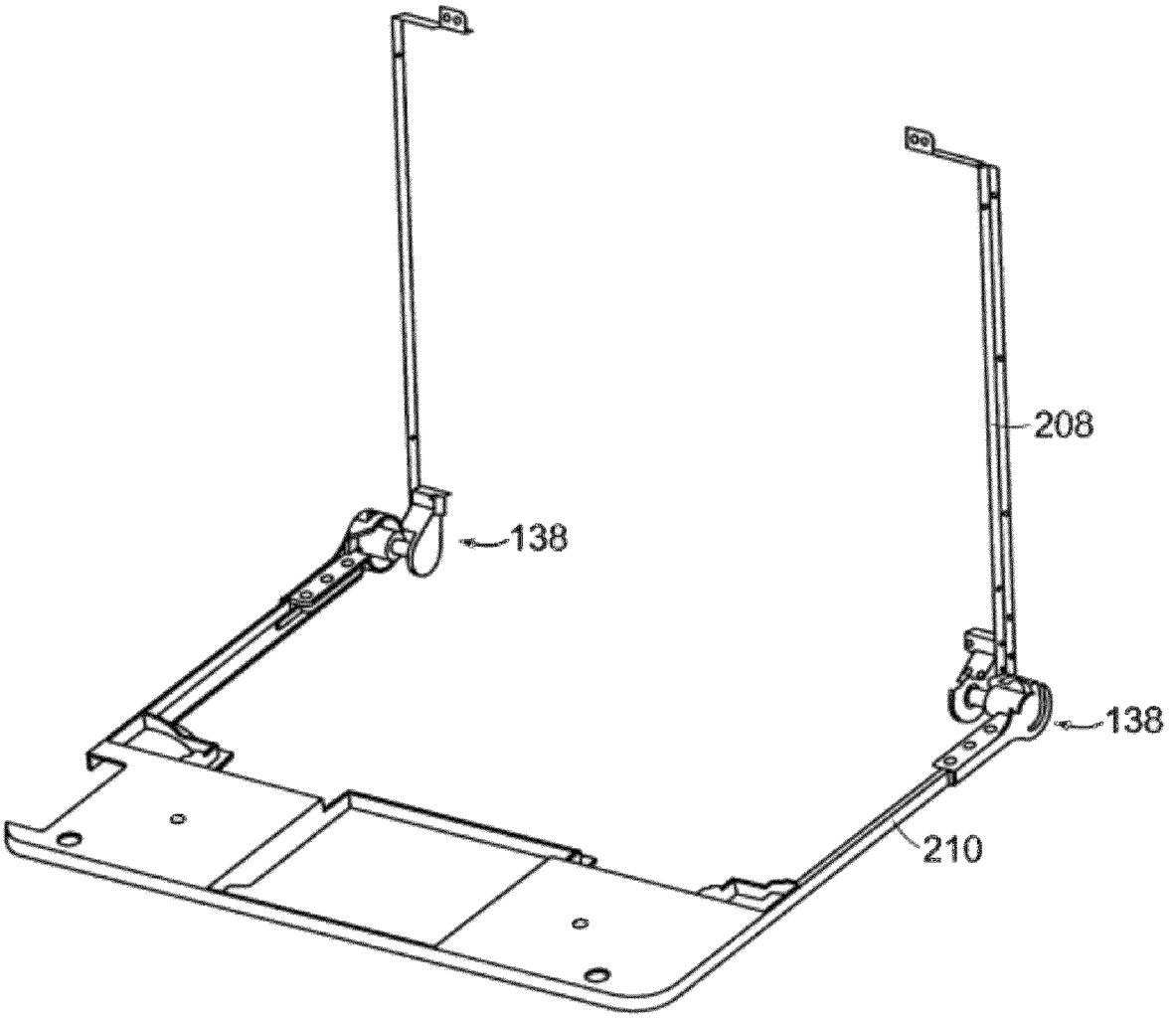

FIG. 25

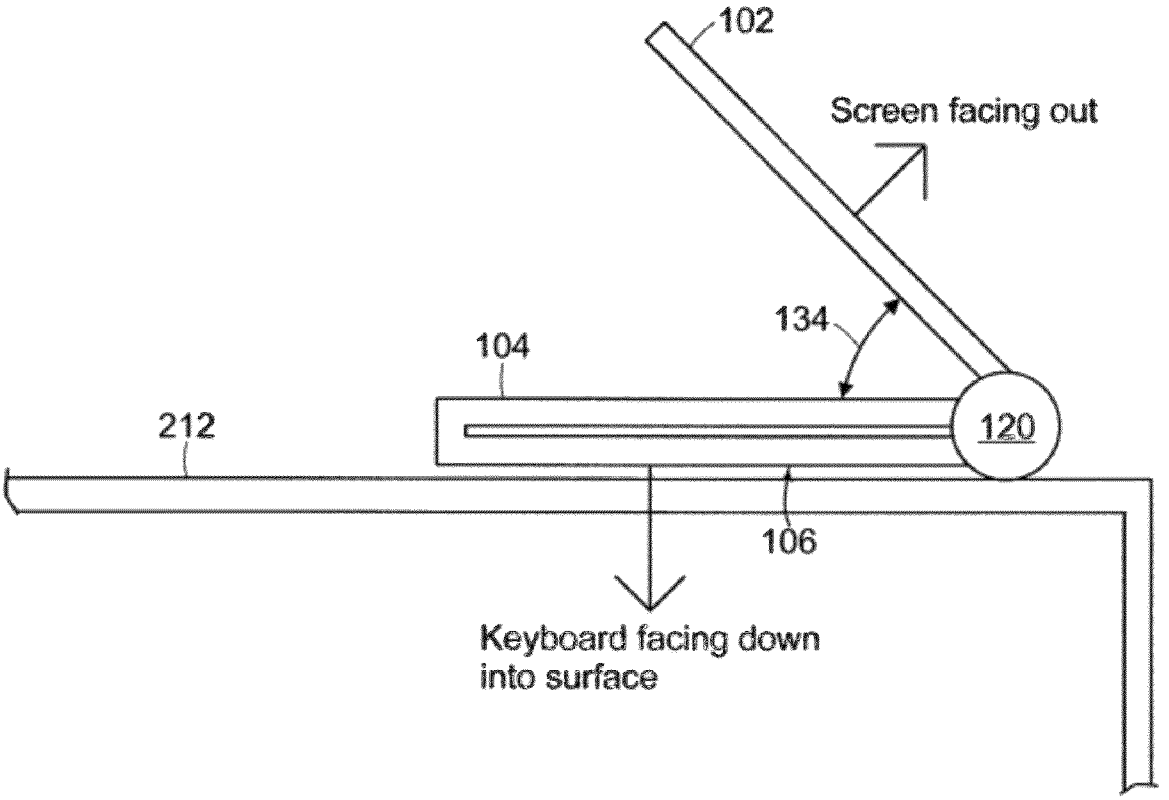
102
Screen facing out
134
104
212
120
106
Keyboard facing down
into surface

FIG. 26

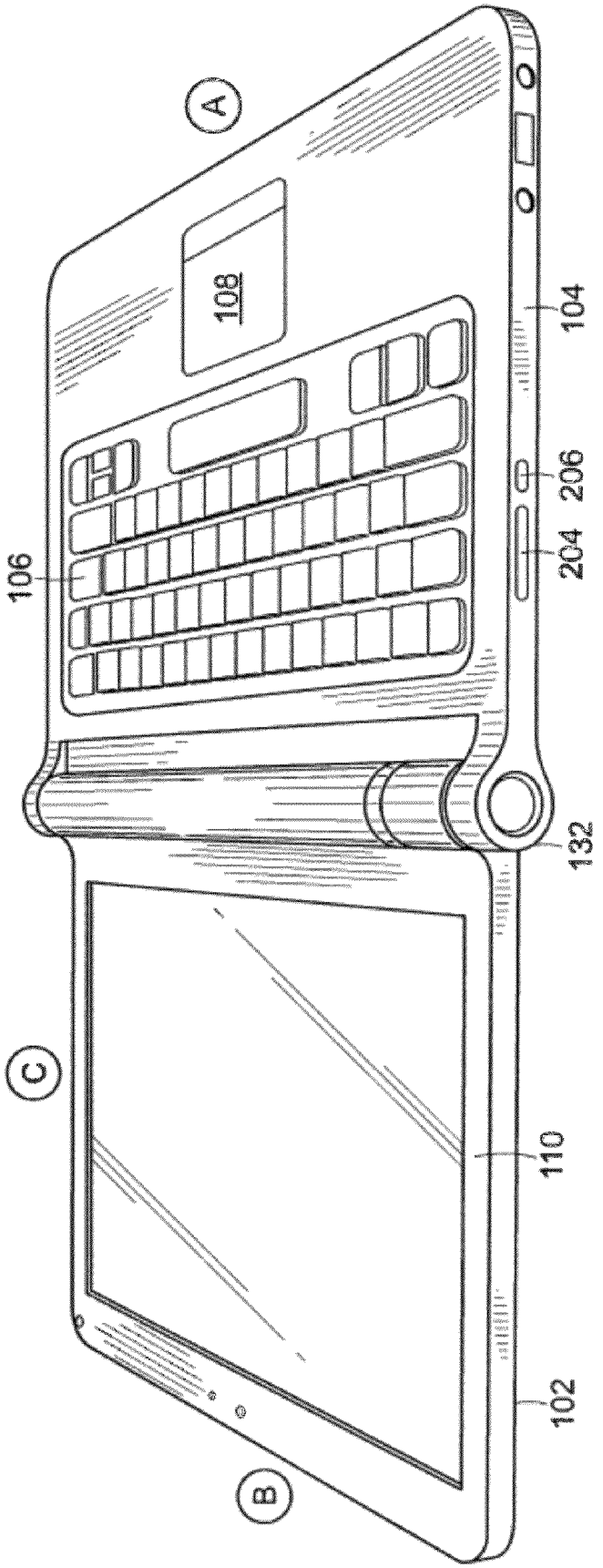

FIG. 27

PORTABLE COMPUTER WITH MULTIPLE DISPLAY CONFIGURATIONS

RELATED APPLICATIONS

This application claims priority under 35 U.S.C. §119(e) to U.S. Provisional Patent Application No. 61/041,365 filed Apr. 1, 2008, entitled "PORTABLE COMPUTER WITH MULTIPLE DISPLAY CONFIGURATIONS," which is incorporated herein by reference in its entirety.

BACKGROUND

1. Field of Invention

The present invention relates generally to portable computers and, more particularly, to a portable computer that is configurable into different functional and positional modes.

2. Discussion of Related Art

Portable computers, such as laptop computers or notebook computers, have become increasingly popular and ubiquitous in the home and workplace. Conventional portable computers most commonly have a "clam-shell" configuration, with a base including the keyboard, various ports, connectors and/or inputs (e.g., for power and connecting peripheral devices), and the majority of the electrical components (e.g., the central processing unit and memory), and a display component pivotably coupled to the base by a hinge. The display component is movable about the hinge between a closed position, with the display screen positioned adjacent the keyboard, and an open position, with the display screen inclined at a desired viewing angle.

Some portable computers are able to accept user inputs via a touch screen in addition to via conventional tools, such as a keyboard or mouse. The use of a touch screen to input data is sometimes referred to as operating in "tablet mode" because the computer is being used in a manner similar to a tablet of paper. U.S. Pat. No. 6,771,494 discloses a hybrid tablet-type portable computer that is capable of operating either as a normal laptop computer receiving user input via a keyboard ("laptop mode"), or as a tablet computer receiving user input via a touch screen. The '494 patent further discloses that the display component of the computer is attached to the base of the computer by hinges that allow the display to be tilted relative to the base (for laptop mode), and to be rotated and folded against the base to configure the computer into tablet mode.

Another variation of a portable computer with a moveable display is disclosed in U.S. Pat. No. 6,266,236. The '236 patent discloses a computer including a base, a display member and an arm assembly coupling the display member to the base. According to the '236 patent, the arm assembly allows pivotable movement of the display member between a plurality of positions, including a notebook mode configuration, a tablet mode configuration, a presentation mode configuration, and a closed mode.

SUMMARY OF INVENTION

Aspects and embodiments of the present invention are directed to a portable computer that is configurable between a laptop mode (in which the portable computer has a conventional laptop appearance) and an easel mode in which the base of the computer and its display component stand upright forming an inverted "V," as discussed further below. The display component is pivotably coupled to the base of the portable computer by a hinge that allows the display component to be rotated or tilted about a longitudinal axis running

along an interface between the base and the display component. Unlike the computers discussed in U.S. Pat. No. 6,266,236 and U.S. Pat. No. 6,771,494 above, the portable computer according to embodiments of the invention does not require an arm assembly, nor multiple, different hinge assemblies to be configured into the different modes. Furthermore, the portable computer according to embodiments of the invention is capable of different display modes and different functionality in the different configurations, as discussed below.

Further aspects and embodiments are directed to a portable computer having an embedded scroll wheel that can be configured to allow a user to control various features and functionality of the portable computer. For example, as discussed further below the scroll wheel can be used to navigate among information displayed on the portable computer's display and/or to alter operating modes of the portable computer, and/or to control features such as volume, display brightness, etc.

According to one embodiment, a portable computer is configurable between various modes, including a closed mode, a laptop mode, an easel mode, a flat mode and a frame mode. The portable computer may comprise a display component including a display screen, a base, and a hinge assembly at least partially housed within the base and configured to pivotably couple the display component to the base. The display component may be rotatable about a longitudinal axis running along an interface between the display component and the base. In the closed mode, the display screen may be disposed substantially against the base, and rotating the display component about the longitudinal axis up to approximately 180 degrees from the closed mode may configure the portable computer into the laptop mode. Rotating the display component about the longitudinal axis beyond approximately 180 degrees axis from the closed mode may configure the portable computer into the easel mode.

In one example of the portable computer, the display component is rotatable about the longitudinal axis up to approximately 320 degrees from the closed mode. In another example, the portable computer comprises a display orientation module that displays content on the display screen in one of a plurality of orientations relative to the longitudinal axis. The orientation of the displayed content may be dependent on the current display mode of the portable computer, or may be configurable responsive to a user input. The portable computer may further comprise a mode sensor which detects a current display mode of the portable computer, and the display orientation module may display content on the display screen in an orientation dependent on the current display mode detected by the mode sensor. Depending on the hinge assembly used, the longitudinal axis may comprises multiple parallel axes, and the hinge assembly may be configured to permit rotation of the display component about any of the multiple parallel axes to configure the portable computer between the plurality of display modes.

Another embodiment is directed to a portable computer comprising a base, a display component rotatably coupled to the base, and means for rotating the display component in a single direction relative to the base to configure the portable computer between a laptop mode and an easel mode.

In another embodiment of a portable computer configurable between multiple modes including a laptop mode and an easel mode, the portable computer comprises a display component, a base, and a hinge assembly configured to rotatably couple the display component to the base. The hinge assembly may be configured to permit rotation of the display component about a single axis to configure the portable computer between the laptop mode and the easel mode. In one

example, the single axis is a longitudinal axis running along an interface between the display component and the base. The portable computer may further comprise a scroll wheel disposed at least partially about the longitudinal axis. In one example, the display component comprises a display screen, and the scroll wheel is configured to permit a user to manipulate content displayed on the display screen.

Another embodiment is directed to a method of automatically orienting content displayed on a portable computer. The method comprises rotating a display component of the portable computer about a longitudinal axis running along an interface between the display component and a base of the portable computer, detecting a degree of rotation of the display component relative to the base, providing a signal representative of the degree of rotation of the display component, and automatically configuring an orientation, relative to the longitudinal axis, of the content displayed on the portable computer responsive to the signal.

According to another embodiment, a portable computer comprises a base unit, a display unit including a display screen configured to display content, an orientation sensor which detects an orientation of the display unit relative to the base unit, and a display orientation module which orients the content displayed on the display screen responsive to the orientation detected by the orientation sensor.

Another embodiment of a portable computer comprises a base, a display component rotatably coupled to the base such that the display component and the base are rotatable with respect to one another about a longitudinal axis running along an interface between the display component and the base, the display component including a display screen, and a scroll wheel disposed at least partially within the base and rotatable about the longitudinal axis, the scroll wheel configured to permit a user to control at least one of operating parameters of the portable computer and content displayed on the display screen. In one example, the scroll wheel is configured to permit the user to adjust a volume of sound produced by the portable computer. In another example, the screen is configured to display at least one of a plurality of modes of content, and the scroll wheel is configured to permit the user to select a mode of content for display by the portable computer. The portable computer may further comprise one or more navigation buttons that may be used in conjunction with the scroll wheel to control aspects of the portable computer and displayed content.

According to another embodiment, a portable computer is configurable between a plurality of display modes including a laptop mode and an easel mode, the portable computer comprising a base, a display component rotatably coupled to the base and including a screen which displays content, and a scroll wheel accessible in each of the plurality of display modes and configured to permit a user to manipulate at least one of operating parameters of the portable computer and the content displayed on the screen. In one example, the scroll wheel is disposed at leas partially about an axis of rotation of the display component relative to the base.

In another embodiment, a portable computer comprises a base, a display component including a screen configured to display content, a hinge assembly configured to rotatably couple the display component to the base and to permit rotation of the display component about a longitudinal axis running along an interface between the display component and the base, and a scroll wheel disposed at least partially about the longitudinal axis.

Still other aspects, embodiments, and advantages of these exemplary aspects and embodiments, are discussed in detail below. Moreover, it is to be understood that both the foregoing information and the following detailed description are merely illustrative examples of various aspects and embodiments, and are intended to provide an overview or framework for understanding the nature and character of the claimed aspects and embodiments. Any embodiment disclosed herein may be combined with any other embodiment in any manner consistent with the objects, aims, and needs disclosed herein, and references to "an embodiment," "some embodiments," "an alternate embodiment," "various embodiments," "one embodiment" or the like are not necessarily mutually exclusive and are intended to indicate that a particular feature, structure, or characteristic described in connection with the embodiment may be included in at least one embodiment. The appearances of such terms herein are not necessarily all referring to the same embodiment. The accompanying drawings are included to provide illustration and a further understanding of the various aspects and embodiments, and are incorporated in and constitute a part of this specification. The drawings, together with the remainder of the specification, serve to explain principles and operations of the described and claimed aspects and embodiments.

BRIEF DESCRIPTION OF THE DRAWINGS

Various aspects of at least one embodiment are discussed below with reference to the accompanying figures, which are not intended to be drawn to scale. Where technical features in the figures, detailed description or any claim are followed by references signs, the reference signs have been included for the sole purpose of increasing the intelligibility of the figures, detailed description, and claims. Accordingly, neither the reference signs nor their absence are intended to have any limiting effect on the scope of any claim elements. In the figures, each identical or nearly identical component that is illustrated in various figures is represented by a like numeral. For purposes of clarity, not every component may be labeled in every figure. The figures are provided for the purposes of illustration and explanation and are not intended as a definition of the limits of the invention. In the figures:

FIG. **1** is an illustration of one example of a portable computer, according to aspects of the invention, in a "laptop" configuration;

FIG. **2** is a view of the portable computer of FIG. **1** in the closed position;

FIG. **3** is a plan view of the exterior of the bottom of the portable computer of FIG. **1**;

FIG. **4** is a perspective view of the portable computer of FIG. **1** in the easel mode;

FIG. **5** is a side view of the portable computer of FIG. **4**, illustrating the adjustable angle of the easel mode;

FIGS. **6**A-C are diagrams illustrating different positions of the portable computer of FIG. **4** in easel mode;

FIG. **7**A is an illustration of a portion of the portable computer of FIG. **1** in the laptop mode, illustrating a hinge assembly according to aspects of the invention;

FIG. **7**B is an in illustration of a portion of the portable computer of FIG. **1** in the easel mode, illustrating the hinge assembly according to aspects of the invention;

FIG. **8** is a diagram of one example of the hinge assembly of FIGS. **7**A and **7**B;

FIG. **9** is a cross-sectional diagram of a portion of the hinge assembly of FIG. **8**, taken along line **9-9** in FIG. **8**;

FIG. **10** is an exploded view of the hinge assembly of FIG. **8**;

FIG. **11** is a block diagram of one example of a portable computer user interface architecture, according to aspects of the invention;

FIG. **12** is a screen shot illustrating one example of a graphical user interface, according to aspects of the invention;

FIG. **13** is a screen shot illustrating another example of a graphical user interface according to aspects of the invention;

FIG. **14** is an illustration of a user adjusting the scroll wheel on a portable computer in the easel mode, according to aspects of the invention;

FIG. **15** is an illustration of a user pressing the scroll wheel on a portable computer, according to aspects of the invention;

FIG. **16** is an illustration of a user pressing a navigation button on the portable computer, according to aspects of the invention;

FIG. **17** is an illustration of an example of the portable computer in the laptop mode, according to aspects of the invention;

FIG. **18** is a view of a portion of the portable computer illustrating a wireless signal indicator feature, according to aspects of the invention;

FIG. **19** is a view of a portion of the portable computer in the closed position, according to aspects of the invention;

FIG. **20** is a plan view of one example of a power adaptor, according to aspects of the invention;

FIG. **21** is a side view of the power adaptor of FIG. **20**;

FIG. **22**A is another side view of the power adaptor of FIG. **20**, illustrating the power cord would around a cord spool, according to aspects of the invention;

FIG. **22**B is a plan view of the power adaptor of FIG. **22**A

FIG. **23** is an illustration of the portable computer coupled to a docking station, according to aspects of the invention;

FIG. **24** is an illustration of the portable computer showing one example of a docking connector, according to aspects of the invention;

FIG. **25** is an illustration of a hinge assembly coupled to a computer frame, according to aspects of the invention;

FIG. **26** is an illustration of the portable computer configured into a "frame" mode, according to aspects of the invention; and

FIG. **27** is an illustration of the portable computer configured into a "flat" mode, according to aspects of the invention.

DETAILED DESCRIPTION

Aspects and embodiments are directed to a portable computer that is configurable between different operating modes, including a laptop mode (in which the portable computer has a conventional laptop appearance), a flat mode, a frame mode, and an easel mode in which the base of the computer and its display component stand vertically forming an inverted "V," as discussed further below. The portable computer is capable of different display formats and functionality in the different modes, and includes a graphical user interface that may work seamlessly with the computer hardware to provide a unified, comfortable, holistic user experience. In particular, the portable computer may provide access to a wide array of functions, both those traditionally provided by computing devices and those traditionally provided by other passive information devices. For example, the hardware and software, including the graphical user interface, of the portable computer may be focused toward providing access to entertainment media, such as audio and video (e.g., playing music, streaming video, viewing photographs, etc.), email, and internet, while also providing state-of-the-art computer processing capability.

It is to be appreciated that embodiments of the methods and apparatuses discussed herein are not limited in application to the details of construction and the arrangement of components set forth in the following description or illustrated in the accompanying drawings. The methods and apparatuses are capable of implementation in other embodiments and of being practiced or of being carried out in various ways. Examples of specific implementations are provided herein for illustrative purposes only and are not intended to be limiting. In particular, acts, elements and features discussed in connection with any one or more embodiments are not intended to be excluded from a similar role in any other embodiments. Also, the phraseology and terminology used herein is for the purpose of description and should not be regarded as limiting. Any references to embodiments or elements or acts of the systems and methods herein referred to in the singular may also embrace embodiments including a plurality of these elements, and any references in plural to any embodiment or element or act herein may also embrace embodiments including only a single element. References in the singular or plural form are not intended to limit the presently disclosed systems or methods, their components, acts, or elements. The use herein of "including," "comprising," "having," "containing," "involving," and variations thereof is meant to encompass the items listed thereafter and equivalents thereof as well as additional items. References to "or" may be construed as inclusive so that any terms described using "or" may indicate any of a single, more than one, and all of the described terms.

Referring to FIG. **1**, there is illustrated one example of a portable computer according to aspects of the invention. In FIG. **1**, the portable computer **100** is illustrated in the "laptop" mode, with the display component **102** inclined at a viewing angle from the base **104**. The display component **102** is pivotably coupled to the base **104** by a hinge assembly (not shown) that allows the display component to be rotated with respect to the base. The hinge assembly may include a single or multiple hinges, which may be any of a variety of hinge types, including, but not limited, to single-axis hinges, multiple-axis hinges, geared hinges, etc. In one example, the hinge assembly allows the display component **102** to be rotated (or tilted) about a longitudinal axis **101** running along an interface between the display component and the base **104**, as illustrated in FIG. **1** and discussed further below. The base **104** includes a keyboard **106** and internal electronic components (not shown), such as a central processing unit, memory, and other components necessary to operate the portable computer, as known to those skilled in the art. In some embodiments, the base **104** may also include a touch pad **108** or trackball (not shown) for receiving user commands, as known to those skilled in the art.

Still referring to FIG. **1**, the display component **102** includes a display screen **110**, and may also include a camera **112**, microphone **114**, and infrared receiver **116**, as discussed further below. It is to be appreciated that the locations of the camera **112**, microphone **114** and infrared receiver **114** are not limited to the example illustrated in FIG. **1**, and may be placed in other locations on the display component **102** and/or base **104**, as would be recognized by those skilled in the art. The display component **102** may also include cushions **118** that provide soft contact points between the base **104** and the display component **102** when the portable computer is closed. In one example, the cushions **118** are made of rubber. However, it is to be appreciated that the invention is not so limited, and the cushions **118** may comprise materials other than rubber, including, for example, a polymer, felt, or other suitable materials as would be recognized by those skilled in the art.

Referring to FIG. **2**, there is illustrated a side view of the portable computer **100** of FIG. **1** in the closed configuration. As is the case for conventional clam-shell type portable computers, when the portable computer **100** is closed, the display screen is disposed "face down" against the keyboard of the

base **104**. In the illustrated embodiment, the base **104** includes a rounded portion **120** that houses the hinge (not shown) that pivotably couples the display component **102** to the base, as discussed further below. It is to be appreciated that the rounded portion **120** is not limited to having a round shape, but may instead have another shape, which may be dependent on the type of hinge used. In one embodiment, a power button **122**, configured to turn the portable computer ON and OFF, may also be provided on the rounded portion **120**, as illustrated in FIG. **2**. However, it is to be appreciated that the invention is not so limited, and the power button **122** may be located elsewhere on the base **104**. In one example, the power button **122** may be slightly recessed relative to the surface of the base **104**, so as decrease the potential for the power button to be accidentally pressed.

An exterior view of the bottom of the base **104** (the underside of the portable computer **100**) is illustrated in FIG. **3**. As can be seen in FIG. **3**, in one embodiment, the base **104** includes a plurality of feet **124**. In one example, the feet **124** are made of rubber; however, it is to be appreciated that the invention is not so limited and the feet may be made of another material, such as, for example, a polymer or felt. A ventilation slit **126** may be provided near an interface between the base **104** and the display component **102**, as illustrated, or elsewhere as may be desired, to allow heat to dissipate from the internal electronic components in the base. The base **104** may also include one or more speakers **128**. In one example, the base **104** includes two stereo speakers **128**, positioned at either side of the base, as illustrated in FIG. **3**; however, it is to be appreciated that the portable computer **100** may comprise more or fewer speakers which may be placed at any location on the base **104**. A scroll wheel **132** may be provided to allow a user to control certain functionality of the portable computer **100**, such as navigating web pages, controlling speaker volume, selecting programs, etc., as discussed further below.

According to one embodiment, the base **104** may comprise a cushioning strip **130** disposed along an edge of the base **104** opposite to the interface between the display component **102** and the base, as illustrated in FIG. **3**. The cushioning strip **130**, which may comprise rubber, a polymer, or another suitable material, may serve as a "foot" when the portable computer is configured into the easel mode, as discussed further below. In one embodiment, the display component **102** may be provided with a similar cushioning strip that may serve as a second supporting foot when the portable computer is configured into the easel mode.

Referring to FIG. **4**, there is illustrated an example of the portable computer **100** configured into the easel mode. To convert the portable computer **100** from the laptop mode (or closed position) into the easel mode, the display component **102** may be folded away from the base **104**, in the same direction as to open the computer (i.e., to configure the computer from the closed position into the laptop mode) such that the base **104** and the display component **102** form an inverted "V" shape with the bottom of the base and the back of the display component face another, as illustrated in FIG. **4**. In the easel mode, the display screen **110** is visible and accessible on one side of the portable computer **100** and the keyboard **106** (not shown in FIG. **4**) is visible and accessible on the other side.

As illustrated in FIG. **4**, in one embodiment, the portable computer may comprise integrated hardware volume controls, including a volume control button **204** and a mute button **206**. In one example, the volume control button **204** may be a rocker switch that allows a user to easily increase or decrease the volume of audio played through the speakers **128**. When the user presses the volume control button **204**, a volume indicator may temporarily appear on the display screen **110**, to provide a visual indication of the amount by which the volume is being increased or decreased. Similarly, pressing the mute button **206** may cause a visual indication that the volume is muted to appear on the display screen **110**.

According to one embodiment, when the portable computer **100** is configured into the easel mode, the visual display on the display screen **110** is automatically rotated 180 degrees such that the information appears "right-way-up," even through the display screen is upside-down compared to when the portable computer is in the laptop mode. Thus, a user may simply "flip" the portable computer **100** into the easel mode and immediately be able to comfortably view information on the display screen **110**, without having to access display screen controls to adjust the orientation of the visual display. In one embodiment, the portable computer **100** includes an orientation (or mode) sensor that is configured to detect whether the portable computer is in the laptop mode or the easel mode, and to adjust the display accordingly. The orientation sensor may be incorporated into the base component **104**, for example, underneath the keyboard **106**, or into the display component. In one example, locating the orientation sensor in the display component **102**, rather than the base **104**, may provide more robust detection and therefore, may be presently preferred in some embodiments. The orientation sensor may be used to determine a precise relative orientation of the base component **104** with respect to the display component **102**, or vice versa, for example, to determine whether the device is in the laptop mode, easel mode, or some point in between the two modes. In one example, the orientation sensor includes an accelerometer whose output is fed to the computer operating system (or to dedicated logic circuitry) which then triggers a display inversion as appropriate.

Accelerometers have been used in portable devices such as cellular phones, media players or computers, as sudden motion sensors, or "drop detectors," to protect against hard drive crashes in the event that the device is dropped. By contrast, however, the accelerometer in the portable computer according to an embodiment of the invention is not used to detect motion of the overall computer, but rather to detect a configuration of the portable computer **100** (e.g., laptop mode or easel mode), particularly, to detect an orientation of the display component **102** relative to the base component **104**. In one example, information from the accelerometer is provided to a display controller in the portable computer and used to switch the display between portrait or landscape mode, as is done in some conventional devices.

Referring to FIG. **5**, when the portable computer **100** is in the easel mode, the base **104** is disposed at an angle **134** to the display component **102**. This angle **134** is adjustable, for example, to allow a comfortable viewing angle to the display screen **110** to be maintained for different positions of a user **136** and of the portable computer **100**, as illustrated in FIGS. **6**A, **6**B and **6**C. For example, when the user **136** is further from the portable computer, the angle **134***a* (FIG. **6**A) may be made smaller than the angle **134***b* when the user is closer to the portable computer (FIG. **6**B). As discussed above, in one example, the orientation sensor (not shown) may be used to detect, either approximately or precisely, the angle **134** and to provide the information to the computer operating system.

According to one embodiment, the display component **102** is pivotably coupled to the base **104** by a hinge that allows the display component to be moved relative to the base so as to allow the portable computer **100** to be configured into the closed position, the laptop mode or the easel mode. As discussed above, in conventional "clamshell" type portable com-

puters, the hinges that couple the display component to the base generally do not permit more than about 180 degrees of rotation of the display component. Thus, these conventional portable computers can be in a closed position or open, laptop configuration, but cannot be configured into an easel mode because the conventional hinges do not permit sufficient movement of the display component. Similarly, the tablet-type portable computers discussed above have displays that can be opened, rotated and folded such that they lie flat against the keyboard on the base, but cannot be configured into an easel mode. Although, as discussed above, U.S. Pat. No. 6,266,236 discloses a computer that is configurable into a presentation mode, this requires a complex arm assembly. By contrast, the portable computer according to embodiments of the present invention may be configured into the easel mode by simply continuing to tilt or rotate the display component past the "laptop positions" until a desired easel angle **134** is reached.

Referring to FIGS. **7**A and **7**B, there is illustrated a portion of the portable computer **100** illustrating a hinge assembly **138** that allows the portable computer to be configured into either the laptop mode (FIG. **7**A) or the easel mode (FIG. **7**B), according to aspects of the invention. According to one embodiment, the hinge assembly **138** accommodates 0-320 degrees of rotation, allowing a minimum angle **134** (see FIG. **5**) of 40 degrees. However, it is to be appreciated that the hinge assembly **138** may allow greater or fewer degrees of rotation, provided only that sufficient rotation is allowed so as to configure the portable computer **100** into either the laptop mode or the easel mode. As discussed above, in one embodiment the portable computer **100** includes an orientation sensor (not shown) that is configured to detect a relative orientation of the display component **102** and the base component **104**. In one example, the orientation sensor may be an accelerometer incorporated into the base component **104**, as discussed above. Alternatively, the orientation sensor may be incorporated into the hinge assembly **138** and may be used to detect movement of the hinge assembly, and to translate that movement into an information about the relative orientation of the display component **102** and the base component **104** (for example, a size of the angle **134**). It is also to be appreciated that the orientation sensor may include electronic or mechanical components, or a combination thereof. For example, the hinge assembly may be provide with detents that provide an indication of the mode of the portable computer.

As discussed above, and also illustrated in FIGS. **7**A and **7**B, the portable computer may also comprise a scroll wheel **132** that allows a user to adjust, control and/or select various aspects of the portable computer (e.g., wireless capability or speaker volume) or items displayed on the display screen **110**. A housing **160** may contain or support various mechanical and/or electronic components (not shown) that are coupled to the scroll wheel **132** and are configured to convert physical movement of the scroll wheel into electrical signals. These electrical signals may be provided to the central processing unit of the portable computer **100** which processes the electrical signals so as to translate movement of the scroll wheel into control of a selected feature, for example, adjusting the volume of the speaker(s) or selecting a particular item displayed on the display screen, as discussed further below.

One embodiment of the hinge assembly **138** is illustrated in FIG. **8**. The hinge assembly includes a bracket **140** rotatably coupled to a housing **142**. The housing **142** may include a first flange **144** that may be fastened to an internal frame in the base **104**, as illustrated in FIG. **7**A. The first flange **144** may include holes **146** to allow the first flange to be fastened to the base **104** using fasteners, such as, for example, screws, rivets or bolts. The bracket **140** may include a second flange **148** that may be similarly coupled to the display component **102** using fasteners **150**. In one embodiment, the display screen **110** (see FIG. **1**) may be an LCD screen. As known to those skilled in the art, an LCD screen generally comprises a frame and plastic housing. In one example, the second flange **148** may be fastened to either or both of the display screen frame and the screen's plastic housing. Referring to FIG. **25**, there is illustrated an example of two hinge assemblies **138** coupled to the display frame **208** of the display component, and to the base frame **210** of the base component **104**. According to one embodiment, the bracket **140** and/or housing **142** may be formed of cast zinc. However, it is to be appreciated that other materials, including other metals, may be used, and the bracket **140** and/or housing **142** may be formed using a procedure other than casting, such as, for example, machining or molding.

Referring again to FIG. **8**, in one embodiment, the hinge assembly **138** may also incorporate an area **152** for locating the power button (FIG. **2**, **122**) or a navigation control button (FIG. **4**, **166**), as discussed further below.

Referring to FIG. **9**, there is illustrated a cross-sectional view of a portion of the hinge assembly **138** taken along line A-A in FIG. **8**. As shown in FIG. **9**, in one embodiment the hinge assembly **138** comprises a shaft **154** located within the hinge housing **142**. The shaft **154** may be held in position within the hinge housing **142**, and rotatably coupled to the housing, by torsion elements, such as springs **156**. In one example, the springs **156** may be formed by stamping; however, it is to be appreciated that other methods of manufacture may be used. In one example, the hinge assembly may accommodate about 320 degrees of rotation, as discussed above, and may provide about 6.5 in-lbs in symmetric torque.

FIG. **10** is an exploded view of the hinge assembly of FIGS. **8** and **9**. As shown in FIG. **10**, the shaft **154** is coupled to a member **158**. This member **158** may be integral with or coupled to the bracket **140** which is, in turn, fastened to the display component, as discussed above. Thus, the shaft **154** and springs **156** provide a rotatable coupling between the fixed elements of the hinge assembly, namely, the hinge housing **142** and bracket **140** which are fastened to the base **104** and display component **102** of the portable computer. In this manner, the hinge assembly allows the display component **102** to be moved relative to the base **104**, thereby allowing the portable computer to be easily and quickly configured into any of the closed position, laptop mode or easel mode. For example, simply rotating or tilting the display component about the longitudinal axis **101** (see FIG. **1**) up to approximately 180 degrees from the closed mode configures the portable computer into the laptop mode, and rotating the display component about the longitudinal axis **101** beyond approximately 180 degrees axis from the closed mode configures the portable computer into the easel mode.

According to one embodiment, the portable computer may include integrated "navigation" hardware that allows a user to easily and comfortable control various features and functions of the portable computer, and to manipulate content displayed on the portable computer. For example, as discussed above, the portable computer **100** may comprise a scroll wheel **132** that allows a user to control, adjust and/or select various functionality of the portable computer. According to another embodiment, the scroll wheel **132** may be used to provide "hardware navigation" through information, such as menus, icons, etc., displayed on the display screen **110**, as discussed further below with reference to FIG. **17**. A common display configuration used in conventional computers is a "desktop" view in which multiple icons representing links to various

programs or applications are displayed over a background image. Navigation is conventionally performed using a mouse, touch pad or trackball, as known to those skilled in the art. In one embodiment, the portable computer **100** may display information on the display screen **110** in the conventional desktop configuration, and navigation may be performed using either conventional tools, such as a touchpad **108**, trackball (not shown) or peripheral, for example, a mouse, that is connected to the portable computer **100** via a port **164**, or the scroll wheel **132**, or a combination thereof. According to another embodiment, the portable computer **100** includes a streamlined graphical user interface that supports "map" navigation. The map user interface provides a clear overview of the entire computing environment and searching capability within the environment that may be accessed using the scroll wheel **132** and, optionally, one or navigation buttons **166**, **168** that may be provided on the base **104** of the portable computer **100** (button **166**) and/or in the keyboard **106** (button **168**), illustrated in FIG. **17**. In one embodiment, the map mode of navigation is a hierarchical mode that reduces the number of items to select amongst at any stage of navigation, thereby facilitating user access with the scroll wheel **132** and, optionally, the navigation button(s) **166**, **168**. Of course, it is to be appreciated that the map user interface may also be navigated using conventional tools, such as a trackball, touchpad, mouse or arrow keys.

Referring to FIG. **11**, there is illustrated a block diagram of one example of an architecture of the portable computer including a map user interface. The user interface "home" screen **170** that displays a plurality of modes of content **172**. In the illustrated example, the home screen **170** contains five modes of content **172**; however, it is to be appreciated that the home screen may include more or fewer than five modes of content and that the modes of content may differ from the examples discussed below. According to one example, the modes of content **172** accessible via the home screen **170** may include "media" **172***a*, "connect" **172***b*, "web" **172***c*, "applications" **172***d*, and "channels" **172***e*. Using the map user interface, information, programs, features and applications may be grouped into the various modes of content **172**. By selecting any mode of content **172**, for example, by using the scroll wheel **132** and/or navigation buttons **166**, **168**, as discussed further below, the user may access the content organized within that mode. For example, the media mode **172***a* may provide access to a medial player to play, view, search and organize media such as music, video, photos, etc. The connect mode **172***b* may provide access to features such as, for example, email, voice-over-IP, instant messaging, etc., and the web mode **172***c* may provide access to internet browsing and searching. The application mode **172***d* may provide access to, for example, computer applications or programs, such as word processor, spreadsheet, calculator, etc. In one example, these applications or programs may be provided as web-based services rather than programs or applications residing on the portable computer **100**. The channels mode **172***e* may provide access to different functionality of the portable computer, with the different functions or features defined as different channels. For example, a channel may include an alarm clock channel in which the portable computer is configured to display a clock and can be programmed to activate an alarm, e.g., a sound, piece of music, etc., at a predetermined time. Another example of a channel may include a "photo frame" channel in which the portable computer may be configured to display a pre-selected image or set of images, etc. Another example of a channel is a "television" channel, in which the portable computer is configured to stream Internet television. In one example, a user may configure particular Internet television channels (e.g., a news channel, a movie channel, a home and garden channel, etc.) into sub-channels within the channels mode of content **172** (*e*). Some or all of the modes of content **172** may access, retrieve and/or store information on the Internet **174**.

According to one embodiment, the different modes of content **172** may be displayed as a series of bars across the display screen **110**, as illustrated in FIG. **12**. The following discussion of various features, including hardware navigation through the map user interface may refer primarily to the display configuration illustrated in FIG. **12**. However, it is to be appreciated that the invention is not so limited, and the modes of content may be displayed in other configurations, including, for example, a "desktop" and icon configuration, a "dashboard" type display, as illustrated in FIG. **13**, or another configuration, as would be recognized by those skilled in the art. Similarly, navigation is discussed below primarily with reference to the scroll wheel **132** and navigation buttons **166**, **168**; however, it is to be appreciation that navigation may also be accomplished using any of the conventional tools discussed above or known to those skilled in the art.

As discussed above, according to one embodiment, the scroll wheel **132** and, optionally, the navigation buttons **166**, **168** may be used to navigate the user interface. Referring again to FIG. **12**, scrolling the scroll wheel may sequentially highlight different ones of the modes of content **172**. In one example, the highlighting may be achieved by changing the color of the selected mode, and/or by providing a visual indicator, such as a colored bar **176**. A highlighted mode **172** may be selected by pressing the scroll wheel, thereby bringing up a new "page" or screen on the user interface corresponding to the selected mode. Once within a selected mode of content **172**, the scroll wheel may similarly be used to select particular functions, features or applications within that mode. In one embodiment, the default action for the scroll wheel **132** may vary depending on whether the portable computer **100** is in the laptop mode or the easel mode. For example, in easel mode, the default action for the scroll wheel may be channel selection within the channels mode **172**(*e*).

As discussed above, in one embodiment volume control for the speakers **128** may be provided by the volume control button **204** and mute button **206**. Alternatively, according to another embodiment, volume control may be provided using the scroll wheel **132**. Thus, as a user scrolls the scroll wheel **132**, as illustrated in FIG. **14** by arrow **161**, a volume indicator may appear on the display screen **110**. In one example, the volume indicator may comprise a transparent, or partially transparent, box **162** containing volume level indicators that may appear directly below the scroll wheel **132** on the display screen **110**. In this example, as the user scrolls the scroll wheel **132**, different volume levels in the volume box **162** may be successively highlighted, to indicate to the user that the volume is increasing or decreasing.

In one embodiment, the scroll wheel **132** may be depressible as well as scrollable. Thus, pressing the scroll wheel **132**, as illustrated in FIG. **15**, may allow further control, such as, for example, selecting a channel onto which the user has scrolled, or "play" and "pause" of audio or video being played through the portable computer **100**.

As discussed above, according to one embodiment, one or more navigation buttons may be used in conjunction with the scroll wheel. In particular, in one embodiment, the navigation button(s) may be used to change the action of the scroll wheel. As discussed above, in one example, the default action of the scroll wheel is volume control. This action may be changed by pressing the navigation button **166**, as illustrated in FIG. **16**, for example, from volume control to menu navigation in

the user interface, and vice versa. According to one embodiment, the effect of pressing the navigation button **166** may vary depending on active the mode of content of the portable computer **100**. For example, if a user is in the media mode using a photo viewing application, pressing the navigation button **166** may change the action of the scroll wheel **132** from mode navigation to slideshow controls for the photos. When the navigation button **166** is pressed, an control indicator box (similar to the volume indicator box **162** discussed above with reference to FIG. **14**) may appear containing different actions for the photo slideshow, such as "play," "next," "back," "skip," "full screen view," etc., and scrolling the scroll wheel **132** may allow a user to select one of these actions. Pressing the navigation button **166** again may return the scroll wheel action to menu navigation, to allow the user to, for example, move to a different feature or application within the active mode, or to select a different mode.

As can be seen in FIG. **16**, the navigation button **166** may be easily accessed when the portable computer **100** is in the easel mode, providing a convenient navigation tool for this configuration. A similar navigation button **168** may be provided on the keyboard **106**, as illustrated in FIG. **17**. In one example, the functionality of the two navigation buttons **166**, **168** may be the same, with the different locations providing easy, comfortable access in the different configuration modes (i.e., laptop or easel) of the portable computer **100**. Thus, a user may use either navigation button **166** or navigation button **168**, depending on personal preference. In another example, the two navigation buttons may have different functionality. For example, the navigation button **166** may be used to alter the action of the scroll wheel **132**, as discussed above, while the navigation button **168** is used to navigate "up" or "down" a level within the map user interface. For example, pressing the navigation button **168** while within a given mode of content may allow the user to "back up" to the home screen; or pressing the navigation button **168** while within a selected channel (in the channel mode of the content **172***e*) may allow the user to "back-up" to the channel mode main page.

It is to be appreciated that numerous variations on the functionality of the navigation buttons **166**, **168** is possible, as would be recognized by those skilled in the art, and the above examples are given for illustration only and are not intended to be limiting. In addition, any functions described with reference to one navigation button (**166** or **168**) may be instead (or additionally) implemented with the other navigation button. In one example, the function of the navigation buttons **166**, **168** may vary depending on whether the portable computer **100** is configured into the laptop mode or the easel mode. For example, only the navigation button **166** may be active in the easel mode, and only the navigation button **168** may be active in the laptop mode. Alternatively, both navigation buttons **166**, **168** may be usable in either the laptop mode or the easel mode, but their functionality may vary. For example, when the portable computer **100** is in the easel mode, the default action for the navigation button **166** may be channel selection whereas the default action for the navigation button **168** is to access the "home" screen. Furthermore, the portable computer **100** is not limited to the use of two navigation buttons and may instead comprise only a single navigation button or more than two navigation buttons, any of which may be disposed in the locations described above (e.g., on the rounded portion **120** of the base **104** or on the keyboard **106**), or in other locations on the portable computer.

As discussed above, according to one embodiment, the function or display content and/or display orientation of the portable computer may vary when the portable computer is configured from the laptop mode into the easel mode, or vice versa. For example, as discussed above, when the portable computer **100** is configured into the easel mode, the visual display on the display screen **110** is automatically rotated 180 degrees such that the information appears "right-way-up," even through the display screen is upside-down compared to when the portable computer is in the laptop mode. In another example, for at least some activities within at least some modes of content (e.g., viewing a photograph or video), when the portable computer **100** is configured into the easel mode, the display may automatically adjust to "full screen view" (i.e., the displayed image or video is displayed on the full screen size, rather than in a window) to allow for comfortable viewing.

In addition, as discussed above, the ability to configure the portable computer **100** into either the laptop mode or the easel mode provides enhanced functionality. For example, when the portable computer **100** is not being actively used, the user may configure the portable computer into the easel mode, and program the portable computer to act as a digital photo frame, displaying one or more photos of the user's choice. In the easel mode, the portable computer **100** may occupy a smaller footprint on a surface than in the laptop or closed modes because the base **104** and display component **102** are upright, as illustrated in FIGS. **4** and **5**. In addition, because the portable computer can act as a passive information and/or entertainment device, such as a photo frame or clock, as discussed above, the portable computer may provide a useful function even when not being actively used by the user, and may do so (in the easel mode) without taking up much surface area.

According to another embodiment, the portable computer **100** may further comprise a wireless signal indicator **178**, as illustrated in FIG. **18**. The wireless signal indicator **178** may indicate the availability and/or strength of a wireless signal to which the portable computer **100** is connected, or is attempting to connect to. In one example, the color of the wireless signal indicator **178** may provide information regarding the strength of a detected wireless signal. For example, green may indicate a "good" signal; yellow may indicate a "poor" or "low" signal; and red may indicate that there is no signal available. In one example, the wireless signal indicator **178** may be ON or active whenever the portable computer **100** is powered up. Alternatively, the wireless signal indicator **178** may be activated by a user action, for example, by pressing the navigation button **166** or another button or key provided on the portable computer **100**, and may remain active for a predetermined time period (e.g., for 2 seconds, 10 seconds, one minute, etc.). As discussed above, the functionality of the navigation button **166** may vary depending on the configuration mode of the portable computer **100**. In one example, when the portable computer **100** is in the closed position, but still powered up, the default action for the navigation button **166** may be to activate the wireless signal indicator **178**.

According to one embodiment, the portable computer **100** may be provided with power cord and adapter to allow the portable computer to be plugged into a wall supply. Referring to FIG. **19**, there is illustrated a view of a portion of the portable computer **100**, showing a power jack **180** to which the power adaptor can be connected. As discussed above, the portable computer **100** may also include a port **164** to which peripheral devices, such as mouse, external keyboard, portable flash drive, memory stick, etc. may be connected. In one example, the port **164** is a USB port; however, it is to be appreciated that the port may accommodate protocols other than USB. In addition, although only one port **164** is illustrated in FIG. **19**, the portable computer **100** may comprise multiple ports that may accommodate multiple protocols. In one example, the portable computer **100** may also comprise a

headphone jack **182**. It is to be appreciated that the location of any or all of the power jack **180**, port(s) **164**, and headphone jack **182** are not limited to the example shown in FIG. **19**, but may be anywhere convenient or desirable on the portable computer **100**.

Referring to FIG. **20**, there is illustrated a top down view one example of a power adaptor **184** that may be used with the portable computer **100** and connected via the power jack **180**. As known to those skilled in the art, the power adaptor **184** comprises a transformer (not shown) that converts the wall power to a level acceptable for use by the portable computer **100**. In one embodiment, the power adaptor **184** comprises a substantially round body **186** that houses the transformer and other necessary components. A connector **188** may allow the power adaptor **184** to be connected to a wall outlet or extension cord. In one example, the connector **188** may include foldable prongs **190** that can be folded against the connector **188** for storage, and folded out for connection, as illustrated in FIG. **21**. A cord **192** may be slidably accommodated within the body **186**, such that the cord may be stored within the body and flexibly extended (up to its maximum length) by a user.

According to one embodiment, the cord **192** may be wound around a cord spool **194** located within, or partially within, the body **186** of the power adaptor **184**. As illustrated in FIG. **21**, the cord spool **194** may be configured to slide out from the body **186** of the power adaptor **184**, such that the cord **192** can be wound around the cord spool **194**, as illustrated in FIGS. **22**A and **22**B.

According to another embodiment, the portable computer **100** may be configured to connect to a docking station **196**, as illustrated in FIG. **23**. In one embodiment, a connector **198** on the docking station **196** may be configured to slidably connect to connectors **200** on the portable computer **100**, as illustrated in FIG. **23**. In one example, the connectors **200** may include power and audio connectors, such that the portable computer **100** may receive power from the docking station and receive and/or provide audio signals from/to the docking station, respectively. For example, the docking station may be coupled to external speakers, and the portable computer may provide audio signals to the docking station to be played through the external speakers. In another example, the docking station **196** may also be coupled to an audio device (not shown), such as an MP3 player, which may provide audio signals and data to the portable computer **100**, for example, to update an audio library on the portable computer. It is to be appreciated that many other variations of communication between the portable computer **100** and devices coupled to the docking station **196** are possible, as would be recognized by those skilled in the art, and such variations are intended to be within the scope of this disclosure. Furthermore, numerous variations on the connector(s) **198**, **200** that couple the docking station **196** to the portable computer **100** are also possible, as would be recognized by those skilled in the art. For example, the portable computer **100** may include a multi-pin connector **202** located on the base **104**, as illustrated in FIG. **24**. Such and other variations are intended to be within the scope of this disclosure and the above-mentioned examples are provided for illustration only and are not intended to be limiting.

In addition, it is to be appreciated that although the above discussion refers primarily to the portable computer **100** being in either the laptop mode or easel mode, other modes or configurations are also possible. For example, as discussed above, because the portable computer **100** can be configured from the closed position, through the laptop mode into the easel mode by rotating the display component **102**, a number of configurations are possible in between "true" laptop mode and "true" easel mode. In another example, the portable computer **100** may be configured into a "frame" mode, as illustrated in FIG. **26**, in which the portable computer is placed on a surface **212** with the keyboard **106** "face down" on the surface **212** and the display **110** facing upward. In the frame mode, the display component **102** may be at a similar orientation, and angle **134**, with respect to the base component **104** as in the easel mode. However, rather than the base component **104** and display component **102** being oriented vertically with respect to the surface **212**, as in the easel mode (in which the portable computer forms an inverted "V" as discussed above), in the frame mode, the base component **104** may lie flat on the surface **212**, as shown in FIG. **26**. In one example, software and/or hardware protection may be provided for the keyboard to prevent keys from being pressed (or to prevent the portable computer from responding to pressed keys) when the portable computer is in the frame mode.

Similarly, referring to FIG. **27**, there is illustrated another configuration of the portable computer **100**, referring to as the "flat" mode. In the flat mode, the display component **102** may be rotated (or opened) to approximately 180 degrees with respect to the base component **104**, such that the base component and display component lay flat on a surface, with the keyboard **106** and display screen **110** exposed, as shown in FIG. **27**. Unlike the easel and frame modes, in which the keyboard may be concealed and not easily accessible, in the flat mode, the keyboard is accessible and usable. In addition, as discussed above, the visual display on the display screen **110** may be automatically rotated to accommodate comfortable viewing of information by persons located in different positions relative to the base component **104** or display component **102**. The visual display on the display screen **110** may also be manually adjusted by a user using, for example, the keyboard **106**, touch pad **108** or mouse (not shown), scroll wheel **132** or navigation buttons (not shown). For example, if a user (located at position A) wishes to display information for a person located opposite the user (at position B), the visual display may be rotated (automatically or manually) 180 degrees such that the information appears "right-way-up," to the person at location B, even through the display screen **110** is upside-down for that person. Similarly, in another example, the visual display may be rotated (automatically or manually) 90 degrees such that the information appears "right-way-up," for a person at location C. In one example, a user can "toggle" the visual display among various orientations. For example, a user at location A may have the visual display facing themselves while using the keyboard **106** or other controls to change or access information on the display, then toggle the display orientation 180 or 90 degrees to display the information for persons at locations B or C.

In summary, various aspects and embodiments provide a portable computer that is configurable between different operating modes, including a laptop mode and an easel mode, and that is capable of different display formats and functionality in the different modes. The ability to view and operate the portable computer in the different laptop and easel modes, and to incorporate features and functions such as an alarm clock, digital photograph frame, voice-over-IP, etc, may provide enhanced flexibility and usefulness. In addition, the portable computer may include a graphical user interface that may work seamlessly with the computer hardware to provide an enjoyable, holistic user experience.

Having thus described several aspects of at least one embodiment, it is to be appreciated various alterations, modifications, and improvements will readily occur to those skilled in the art. For example functionality or features that have been described herein in connection with hardware may

instead be implemented in software, or vice versa. For example, the wireless signal indicator discussed above may instead (or in addition) be provided as a software application. Such alterations, modifications, and improvements are intended to be part of this disclosure and are intended to be within the scope of the invention. Accordingly, the foregoing description and drawings are by way of example only.

What is claimed is:

1. A portable computer configurable between a plurality of display modes including a closed mode, a laptop mode and an easel mode, the portable computer comprising:

a single display component including a display screen;

a base including a keyboard;

a hinge assembly at least partially housed within the base and the display component configured to pivotably couple the display component to the base, wherein the hinge assembly defines a single longitudinal axis running along an interface between the display component and the base, and wherein the display component and the base are rotatable about the single longitudinal axis;

wherein, in the closed mode, the display screen is disposed substantially against the base;

wherein rotating either the single display component or the base by an operator about the single longitudinal axis up to approximately 180 degrees from the closed mode configures the portable computer into the laptop mode, wherein in the laptop mode the single display component is oriented towards the operator and the keyboard is oriented to receive input from the operator;

wherein rotating either the single display component or the base by the operator about the single longitudinal axis beyond approximately 180 degrees from the closed mode configures the portable computer into the easel mode; and

wherein in the easel mode the single display component is oriented facing the operator with the keyboard oriented away from the operator.

2. The portable computer of claim **1**, wherein the single display component is rotatable about the single longitudinal axis up to approximately 320 degrees from the closed mode.

3. The portable computer of claim **1**, further comprising a display orientation module that displays content on the display screen in one of a plurality of content orientations relative to the single longitudinal axis.

4. The portable computer of claim **3**, further comprising a mode sensor which detects a current display mode of the portable computer; and

wherein the display orientation module displays content on the display screen in the one of the plurality of content orientations dependent on the current display mode detected by the mode sensor.

5. The portable computer of claim **3**, wherein the display orientation module is configured to display the content in a first content orientation relative to the single longitudinal axis when the portable computer is configured into the laptop mode and in a second content orientation relative to the single longitudinal axis when the portable computer is configured into the easel mode.

6. The portable computer of claim **5**, wherein the second content orientation is 180 degrees relative to the first orientation.

7. The portable computer of claim **3**, wherein the plurality of display modes further comprises a flat mode in which the single display component is disposed at an angle of approximately 180 degrees, measured about the single longitudinal axis, relative to the base.

8. The portable computer of claim **7**, wherein the plurality of content orientations comprises a first content orientation relative to the single longitudinal axis, a second content orientation relative to the single longitudinal axis, and a third content orientation relative to the single longitudinal axis; and

wherein, in the flat mode, the content displayed on the display screen is configurable among the first, second and third content orientations responsive to a user input.

9. The portable computer of claim **8**, wherein the second content orientation is 90 degrees relative to the first content orientation; and

wherein the third content orientation is 180 degrees relative to the first content orientation.

10. The portable computer of claim **1**, further comprising:

a foot disposed along at least a portion of the base and configured to support the portable computer when in the easel mode.

11. A portable computer comprising:

a base;

a display component rotatably coupled to the base;

means for rotating the display component in a single direction relative to the base to configure the portable computer between a laptop mode and an easel mode;

a display orientation module configured to automatically orient content displayed on the display component responsive to at least a transition between the laptop mode and the easel mode, wherein the display orientation module is further configured to orient the content displayed between a first display orientation and a second display orientation, the first and second display orientations being 180 degrees relative to each other; and

means for detecting an orientation of the base relative to the display component, wherein the means for detecting is further configured to identify the transition between the laptop mode and the easel mode based on a stored threshold orientation.

12. A portable computer configurable between a plurality of modes including a laptop mode and an easel mode, the portable computer comprising:

a single display component;

a base including an integrated keyboard;

a hinge assembly configured to rotatably couple the single display component to the base, wherein the hinge assembly is at least partially housed within the base and the single display component, and defines a longitudinal axis running along an interface between the single display component and the base;

wherein the hinge assembly is configured to permit rotation of the single display component and the base about the longitudinal axis to configure the portable computer between the laptop mode and the easel mode;

wherein in the easel mode the single display component is oriented facing the operator with the keyboard oriented away from the operator; and

at least one integrated navigation hardware control configured to control features and manipulate content displayed on the portable computer, wherein at least one of the least one integrated navigation hardware control is accessible in each of the plurality of modes including when the keyboard is inaccessible or oriented away from the user.

13. The portable computer of claim **12**, wherein the single display component comprises a display screen configured to display content and a display orientation module configured to control an orientation of the content displayed on the display screen;

wherein the orientation of the content displayed on the display screen is configurable among a plurality of orientations relative to the longitudinal axis.

14. The portable computer of claim **13**, wherein the plurality of orientations comprises a first orientation relative to the longitudinal axis and a second orientation relative to the longitudinal axis; and

wherein when display orientation module is configured to automatically display the content in the first orientation when the portable computer is configured into the laptop mode and in the second orientation when the portable computer is configured into the easel mode.

15. The portable computer of claim **14**, wherein the second orientation is 180 degrees relative to the first orientation; and

wherein the plurality of orientations further comprises a third orientation relative to the longitudinal axis, the third orientation, wherein the third orientation is 90 degrees relative to the first orientation.

16. The portable computer of claim **13**, further comprising a mode sensor configured to provide information representative of a degree of rotation of the single display component relative to the base; and

wherein the display orientation module is configured to automatically adjust the orientation of the content displayed on the display screen responsive to the information from the mode sensor.

17. A method of automatically orienting content in a plurality of display modes displayed on a portable computer comprising a body, the body having a single display component including a display screen and a base including an integrated keyboard, the method comprising:

rotating the single display component of the portable computer about a longitudinal axis running along an interface between the single display component and the base of the portable computer;

detecting a degree of rotation of the single display component relative to the base;

providing a signal representative of the degree of rotation of the single display component;

comparing the degree of rotation with respect to a threshold degree of rotation;

determining a display mode based, at least in part, on the act of comparing the degree of rotation with respect to the threshold degree of rotation;

generating a visual display of the content for the display screen;

orienting the visual display shown on the display screen of the single display component towards an operator for operation of the portable computer in each of the plurality of display modes, wherein the plurality of display modes includes a laptop mode with the integrated keyboard and display oriented towards the operation and an easel mode with the display oriented towards the operator and the keyboard oriented away from the operator; and

automatically configuring a content orientation, relative to the longitudinal axis, of the visual display on the display screen of the portable computer responsive to the signal and the determined display mode, wherein the act of automatically configuring includes acts of:

displaying the visual display in a first content orientation of the content for the degree of rotation that is less than the threshold degree of rotation and the portable computer is determined to be configured in the laptop mode, and

displaying the visual display in a second content orientation of the content for the degree of rotation that is greater than the threshold degree of rotation and the portable computer is determined to be configured in the easel mode, the second content orientation being at 180 degrees relative to the first orientation.

18. The method of claim **17**, wherein automatically configuring the orientation of the content includes:

displaying the visual display of the content in the first content orientation relative to the longitudinal axis responsive to the signal indicating that the degree of rotation of the single display component is less than the threshold degree of rotation of approximately 180 degrees relative to the base; and

displaying the visual display of the content in the second content orientation relative to the longitudinal axis responsive to the signal indicating that the degree of rotation of the single display component is greater than the threshold degree of rotation of approximately 180 degrees relative to the base.

19. A portable computer comprising:

a base unit comprising an integrated keyboard;

a single display unit including a single display screen configured to display content;

an orientation sensor which detects a physical orientation of the single display unit relative to the base unit; and

a display orientation module which orients the content displayed on the single display screen responsive to the physical orientation detected by the orientation sensor between at least a first content display orientation and a second content display orientation, the second content display orientation being 180 degrees relative to the first content display orientation;

wherein the display orientation module is further configured to detect a change between a laptop mode, an easel mode, and a frame mode based on the detected physical orientation of the single display unit relative to the base unit, and wherein the display orientation module is further configured to:

trigger a display inversion from one of the first and second content display orientations to the other of the first and second content display orientations responsive to the orientation sensor detecting the change between the laptop mode and the easel mode,

trigger a display inversion from one of the first and second content display orientations to the other of the first and second content display orientations responsive to the orientation sensor detecting the change between the easel mode and the frame mode.

20. The portable computer of claim **14**, wherein the second orientation is 180 degrees relative to the first orientation.

21. The portable computer of claim **18**, wherein the orientation sensor includes an accelerometer.

22. The portable computer of claim **21**, the orientation sensor is configured to detect an angle of the base relative to the display unit.

23. The portable computer of claim **1**, further comprising at least one integrated navigation hardware control, wherein at least one of the at least one integrated navigation hardware control is accessible in at least the laptop and easel modes, and wherein the integrated navigation hardware can be operated by a user to control features and manipulate content displayed on the portable computer, including any mode wherein the keyboard is inaccessible or oriented away from the user.

24. The portable computer of claim **12**, wherein the plurality of modes includes a frame mode in which the single display component is oriented towards the operator, the base contacts a substantially horizontal surface, and the keyboard is directed towards the substantially horizontal surface.

25. The portable computer of claim **13**, wherein the plurality of modes includes a frame mode in which the single display component is oriented towards the operator, the base contacts a substantially horizontal surface, and the keyboard is directed towards the substantially horizontal surface, and wherein the plurality of orientations comprises a first orientation relative to the longitudinal axis and a second orientation relative to the longitudinal axis; and

wherein when display orientation module is configured to display the content in the first orientation when the portable computer is configured into the laptop mode and frame mode and in the second orientation when the portable computer is configured into the easel mode.

26. The portable computer of claim **24**, further comprising a protection module configured to prevent keyboard operation when the portable computer is configured in the frame mode.

27. The method of claim **17**, wherein the plurality of display modes includes a frame mode wherein in the frame mode the display component is oriented towards the operator, the base contacts a substantially horizontal surface, and the integrated keyboard is directed towards the substantially horizontal surface and the act of automatically configuring includes an act of:

displaying the visual display in the first content orientation of the content for the degree of rotation that is greater than the threshold degree of rotation and the portable computer is determined to be configured in the frame mode.

28. The method of claim **17**, further comprising an act of deactivating keyboard operation when the portable computer is configured in the frame mode.

29. A method of managing user interaction with content displayed on a portable computer having a plurality of display modes, the portable computer comprising a body, the body having: a single display component including a display screen, a base including a keyboard, and a hinge assembly, the method comprising:

manipulating a physical configuration of the single display component relative to the base to transition the portable computer between a plurality of display modes, wherein the act of manipulating includes an act of rotating the single display component of the portable computer about a longitudinal axis running along an interface between the single display component and the base of the body of the portable computer to transition the portable computer to transition the portable computer between the plurality of display modes, including a laptop mode and an easel mode;

wherein the plurality of modes includes at least the laptop mode wherein the single display component and the keyboard are oriented towards an operator and the easel mode wherein the single display component is oriented towards an operator and the keyboard is oriented away from the operator;

determining a display mode responsive to the physical configuration of the single display component relative to the base;

configuring a content orientation, relative to the longitudinal axis, of a visual display on the display screen of the single display component responsive to the display mode, wherein configuring the content orientation includes:

displaying the visual display in a first content orientation of the content for the laptop mode, and

displaying the visual display in a second content orientation for the easel mode, the second content orientation being at 180 degrees relative to the first orientation.

30. The method of claim **29**, wherein the plurality of display modes includes a frame mode and the act of manipulating the physical configuration of the single display component to transition the portable computer between a plurality of display modes includes an act of orienting the single display component towards the operator, placing the base against a substantially horizontal surface, and orienting the keyboard towards the substantially horizontal surface to transition the portable computer into the frame mode.

31. The method according to claim **30**, wherein the act of configuring the content orientation includes an act of displaying the visual display in the first content orientation of the content for the frame mode.

32. The method according to claim **30**, further comprising an act of deactivating keyboard operation when the portable computer is configured in the frame mode.

* * * * *

EXHIBIT B

US008624844B2

(12) **United States Patent**
Behar et al.

(10) **Patent No.: US 8,624,844 B2**
(45) **Date of Patent: *Jan. 7, 2014**

(54) **PORTABLE COMPUTER WITH MULTIPLE DISPLAY CONFIGURATIONS**

(75) Inventors: **Yves Behar**, Oakland, CA (US); **Joshua Morenstein**, San Francisco, CA (US); **Christopher Hibmacronan**, Oakland, CA (US); **Naoya Edahiro**, San Francisco, CA (US); **Matthew David Day**, San Francisco, CA (US)

(73) Assignee: **LITL LLC**, Boston, MA (US)

(*) Notice: Subject to any disclaimer, the term of this patent is extended or adjusted under 35 U.S.C. 154(b) by 494 days.

This patent is subject to a terminal disclaimer.

(21) Appl. No.: **12/170,951**

(22) Filed: **Jul. 10, 2008**

(65) **Prior Publication Data**

US 2009/0244012 A1 Oct. 1, 2009

Related U.S. Application Data

(60) Provisional application No. 61/041,365, filed on Apr. 1, 2008.

(51) **Int. Cl.**
G06F 3/02 (2006.01)

(52) **U.S. Cl.**
USPC **345/169**; 345/168; 345/173; 345/184; 361/679.27; 455/575.3

(58) **Field of Classification Search**
USPC 345/184, 168–169, 156, 173; 361/679.3, 679.21, 679.26–679.27; 455/575.3
See application file for complete search history.

(56) **References Cited**

U.S. PATENT DOCUMENTS

3,468,576	A	9/1969	Beyer et al.	
4,939,514	A	7/1990	Miyazaki	
D333,636	S	3/1993	Issa	
5,200,913	A	4/1993	Hawkins et al.	
5,268,817	A	12/1993	Miyagawa et al.	
5,436,954	A *	7/1995	Nishiyama et al.	455/566

(Continued)

FOREIGN PATENT DOCUMENTS

CN	1292112 A	4/2001
DE	19952486	5/2001
EP	0588210	3/1993
EP	0588210 A1	3/1994
JP	5-197507 A	8/1993

(Continued)

OTHER PUBLICATIONS

http://laptop.org/en/laptop/start/ebook.shtml accessed on Sep. 29, 2008.

(Continued)

Primary Examiner — Lun-Yi Lao
Assistant Examiner — Sosina Abebe
(74) *Attorney, Agent, or Firm* — Lando & Anastasi, LLP

(57) **ABSTRACT**

A portable computer that is configurable between a laptop mode (in which the portable computer has a conventional laptop appearance) and an easel mode in which the base of the computer and its display component stand vertically forming an inverted "V." The portable computer includes a hinge assembly that couples the display component to the base of the computer, and allows the display component to be rotated about an axis along an interface between the display component and the base to configure the portable computer between a closed position, the laptop mode and the easel mode. The portable computer further comprises a scroll wheel and optional navigation buttons.

22 Claims, 25 Drawing Sheets

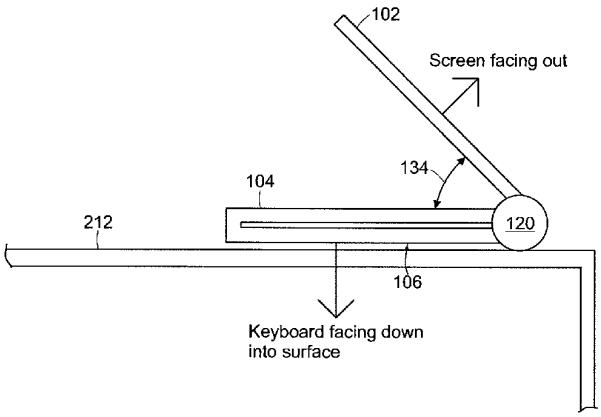

(56) **References Cited**

U.S. PATENT DOCUMENTS

5,515,345	A	5/1996	Barreira et al.	
5,547,698	A	8/1996	Lansbergen et al.	
5,712,760	A	1/1998	Coulon	
D391,927	S	3/1998	Faranda	
D392,944	S	3/1998	Issa	
D395,868	S	7/1998	Iino	
5,790,371	A	8/1998	Latocha et al.	
5,793,355	A	8/1998	Youens	
5,796,575	A *	8/1998	Podwalny et al.	361/679.27
D399,526	S	10/1998	Brady	
5,825,352	A	10/1998	Bisset et al.	
5,841,631	A	11/1998	Shin et al.	
5,847,698	A	12/1998	Reavey et al.	
5,900,848	A	5/1999	Haneda et al.	
5,926,364	A	7/1999	Karidis	
5,949,643	A	9/1999	Batio	
D416,003	S	11/1999	Sciefer et al.	
5,987,704	A	11/1999	Tang	
6,005,767	A	12/1999	Ku	
6,067,224	A	5/2000	Nobuchi	
6,097,389	A	8/2000	Morris et al.	
6,144,358	A	11/2000	Narayanaswamy et al.	
6,222,507	B1	4/2001	Gouko	
6,223,393	B1	5/2001	Knopf	
6,262,885	B1	7/2001	Emma et al.	
6,266,236	B1	7/2001	Ku	
6,275,376	B1	8/2001	Moon	
6,295,038	B1	9/2001	Rebeske	
6,302,612	B1	10/2001	Fowler	
6,323,846	B1	11/2001	Westerman et al.	
D452,238	S	12/2001	Sugano	
6,327,482	B1	12/2001	Miyashita	
6,341,061	B1	1/2002	Eisbach et al.	
6,343,006	B1	1/2002	Moscovitch	
6,377,444	B1	4/2002	Price et al.	
D462,069	S	8/2002	Gatto	
6,437,974	B1 *	8/2002	Liu	361/679.27
D463,797	S	10/2002	Andre	
6,464,195	B1	10/2002	Hildebrandt	
6,492,974	B1 *	12/2002	Nobuchi et al.	345/156
6,510,049	B2	1/2003	Rosen	
D476,326	S	6/2003	Tanimura	
D479,708	S	9/2003	Hwang	
6,628,267	B2	9/2003	Karidis	
6,642,909	B1	11/2003	Oliva	
6,659,516	B2	12/2003	Wang	
6,661,426	B1	12/2003	Jetha	
6,665,175	B1	12/2003	deBoer et al.	
6,693,652	B1	2/2004	Barrus et al.	
6,697,055	B1	2/2004	Bullister	
D491,177	S	6/2004	Andre	
D491,936	S	6/2004	Jao	
D494,162	S	8/2004	Kondo	
6,771,494	B2	8/2004	Shimano	
D495,674	S	9/2004	Yoo	
D495,694	S	9/2004	Chase	
6,788,527	B2	9/2004	Doczy et al.	
6,819,304	B2	11/2004	Branson	
6,829,140	B2	12/2004	Shimano	
6,859,219	B1	2/2005	Sall	
D504,128	S	4/2005	Maskatia	
6,882,335	B2	4/2005	Saarinen	
6,944,012	B2	9/2005	Doczy et al.	
6,963,485	B2	11/2005	Hong	
D512,997	S	12/2005	Lee	
6,972,752	B2	12/2005	Nako et al.	
D513,509	S	1/2006	Kawa	
D516,552	S	3/2006	Iseki	
D517,541	S	3/2006	Maskatia	
D518,042	S	3/2006	Kanayama	
7,035,665	B2 *	4/2006	Kido et al.	455/566
D523,429	S	6/2006	Lin	
7,061,472	B1 *	6/2006	Schweizer et al.	345/168
7,072,179	B1	7/2006	Curran et al.	
D528,541	S	9/2006	Maskatia	
D528,993	S	9/2006	Wilson	
7,138,962	B2	11/2006	Koenig	
D534,531	S	1/2007	Ogasawara	
D535,292	S	1/2007	Shi	
D544,846	S	6/2007	Kindle	
7,239,508	B2	7/2007	Ferrucei	
7,250,207	B1	7/2007	Heal et al.	
7,366,994	B2	4/2008	Loui	
7,428,142	B1	9/2008	Ligtenberg	
D581,371	S	11/2008	Richmond	
7,467,356	B2 *	12/2008	Gettman et al.	715/850
7,522,946	B2	4/2009	Im	
D593,085	S	5/2009	Behar	
D593,086	S	5/2009	Behar	
D593,091	S	5/2009	Behar	
D605,635	S	12/2009	Edahiro	
7,698,407	B2	4/2010	Mattox, Jr. et al.	
7,756,928	B1	7/2010	Meenan et al.	
7,869,834	B2 *	1/2011	Seol et al.	455/567
2001/0032320	A1	10/2001	Abdelnur et al.	
2002/0005818	A1	1/2002	Bruzzone	
2002/0010707	A1	1/2002	Chang et al.	
2002/0021258	A1	2/2002	Koenig	
2003/0048595	A1	3/2003	Hsieh	
2003/0107603	A1 *	6/2003	Clapper	345/784
2003/0109232	A1	6/2003	Park	
2004/0001049	A1	1/2004	Oakley	
2004/0203535	A1	10/2004	Kim	
2004/0207568	A1	10/2004	Ooshima et al.	
2004/0212602	A1	10/2004	Nako et al.	
2004/0228076	A1	11/2004	Clapper	
2005/0018396	A1	1/2005	Nakajima	
2005/0041378	A1	2/2005	Hamada	
2005/0063145	A1	3/2005	Homer et al.	
2005/0083642	A1 *	4/2005	Senpuku et al.	361/681
2005/0091596	A1	4/2005	Anthony et al.	
2005/0128695	A1	6/2005	Han	
2005/0134717	A1	6/2005	Misawa	
2005/0146845	A1	7/2005	Moscovitch	
2005/0210399	A1	9/2005	Filner et al.	
2005/0221865	A1	10/2005	Nishiyama et al.	
2005/0257400	A1	11/2005	Sommerer	
2005/0282596	A1	12/2005	Park et al.	
2006/0126284	A1	6/2006	Moscovitch	
2006/0238439	A1 *	10/2006	Fuller et al.	345/1.1
2006/0264243	A1 *	11/2006	Aarras	455/566
2006/0268500	A1	11/2006	Kuhn	
2007/0138806	A1	6/2007	Ligtenberg et al.	
2007/0182663	A1	8/2007	Biech	
2007/0240076	A1	10/2007	Astala et al.	
2007/0242421	A1	10/2007	Goschin et al.	
2007/0247446	A1 *	10/2007	Orsley et al.	345/184
2008/0024388	A1	1/2008	Bruce	
2008/0024465	A1	1/2008	Hawkins et al.	
2008/0042987	A1	2/2008	Westerman et al.	
2008/0062625	A1	3/2008	Batio	
2008/0158795	A1	7/2008	Aoki et al.	
2008/0174570	A1	7/2008	Jobs et al.	
2008/0235594	A1	9/2008	Bhumkar et al.	
2008/0284738	A1	11/2008	Hovden et al.	
2009/0019383	A1	1/2009	Riley et al.	
2009/0150826	A1	6/2009	Lyndersay et al.	
2009/0190295	A1	7/2009	Chin et al.	
2009/0244012	A1	10/2009	Behar et al.	
2009/0244832	A1	10/2009	Behar et al.	
2009/0275366	A1	11/2009	Schilling	
2009/0300511	A1	12/2009	Behar	
2009/0303676	A1	12/2009	Behar	
2009/0322790	A1	12/2009	Behar	
2010/0174993	A1	7/2010	Pennington	

FOREIGN PATENT DOCUMENTS

JP	6090200	A	3/1994
JP	6-242853	A	9/1994
JP	6-259166	A	9/1994
JP	8-179851	A	7/1996
JP	10-111658	A	4/1998
JP	11-296259		10/1999

(56) **References Cited**

FOREIGN PATENT DOCUMENTS

JP	2001-167211	A	6/2001
JP	2004-302179	A	10/2004
JP	2005-159741	A	6/2005
JP	2005-242436	A	9/2005
JP	2006-227409		8/2006
KR	10-2000-0036647	A	7/2000

OTHER PUBLICATIONS

Miller, M., "Creating a Digital Home Entertainment System with Windows Media Center", Apr. 2006, Que.

Japanese Office Action mailed Dec. 4, 2012 from national phase entry of the corresponding PCT application.

Partial translation of Japanese Office Action from national phase examination of the Corresponding PCT application. (Letter dated Dec. 7, 2012 including English partial translation of JP OA dated Dec. 4, 2012).

Search Report from corresponding International Application PCT/US2009/038599 dated Mar. 6, 2009.

International Search Report from a commonly owned PCT application PCT/US09/39117, dated Sep. 29, 2009.

Final Office Action for Japanese Application No. 2011-503058 mailed Apr. 16, 2013, 3 pages.

* cited by examiner

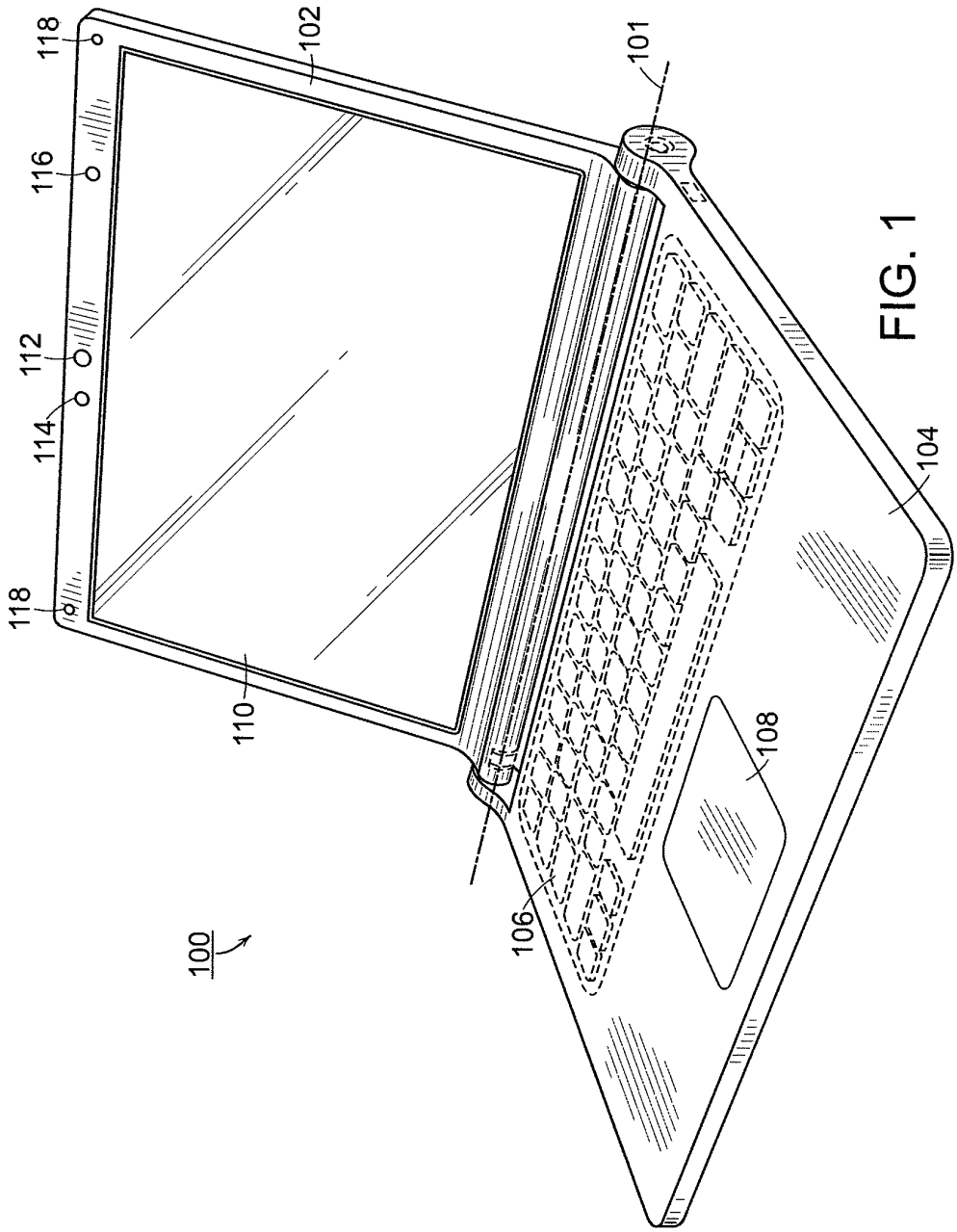

FIG. 1

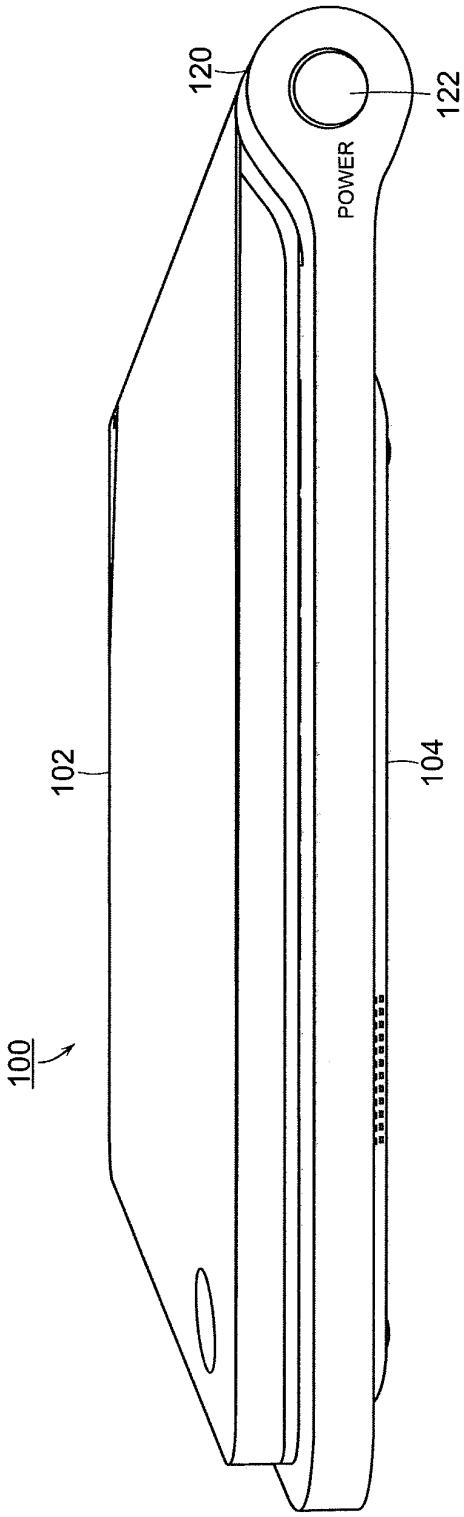

FIG. 2

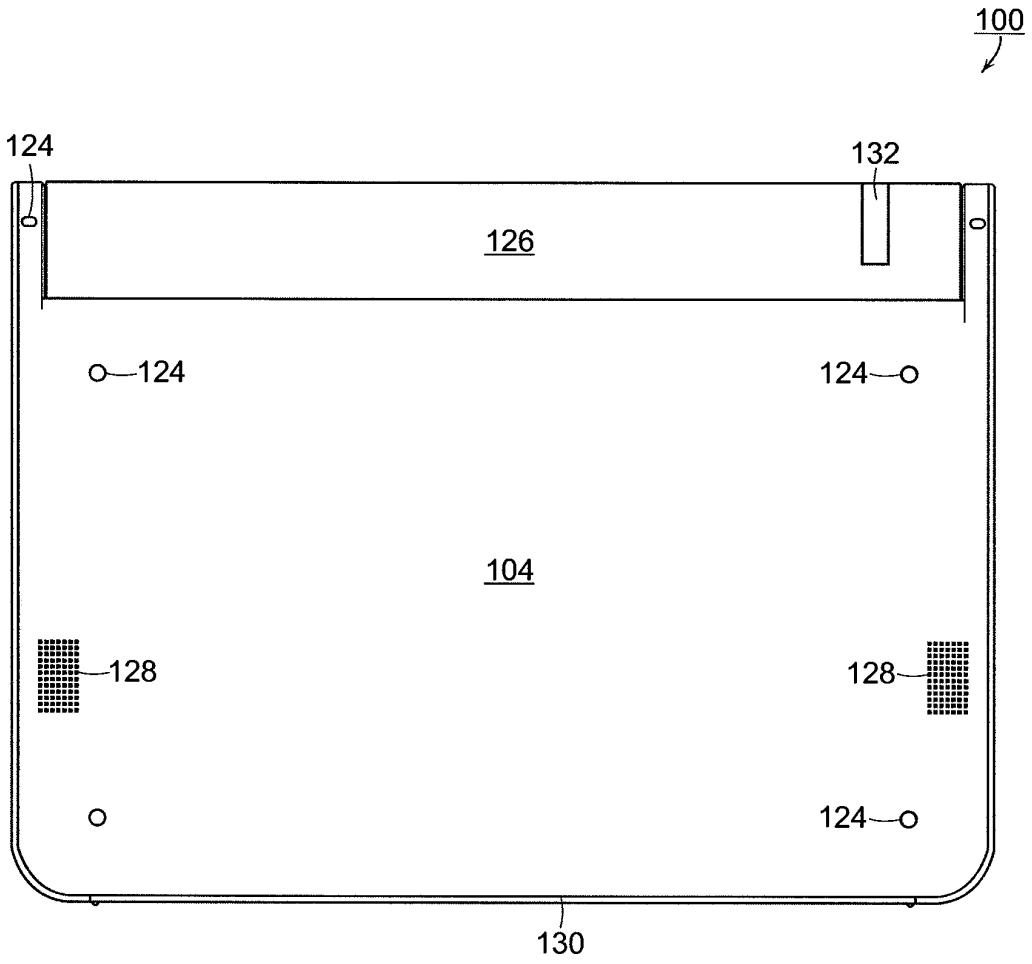

FIG. 3

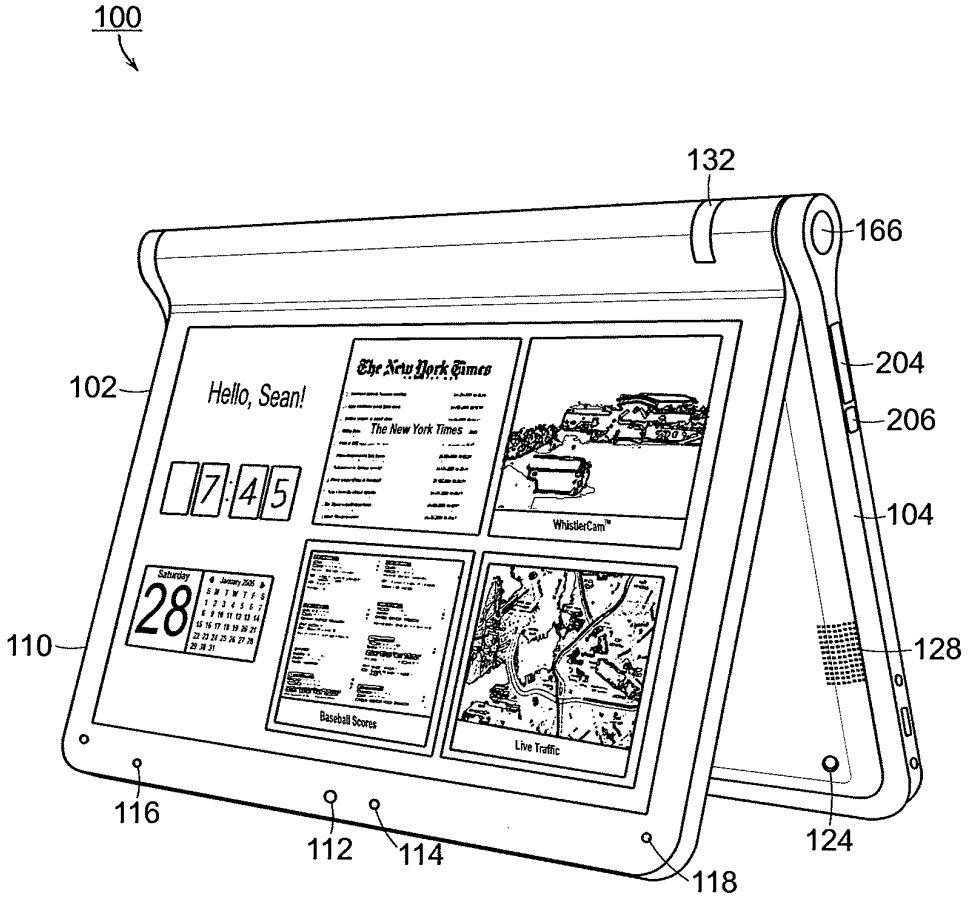
100
132
166
204
206
104
128
102
110
116
112
114
118
124
Hello, Sean!
7:45
The New York Times
WhistlerCam™
Baseball Scores
Live Traffic
Saturday
28

FIG. 4

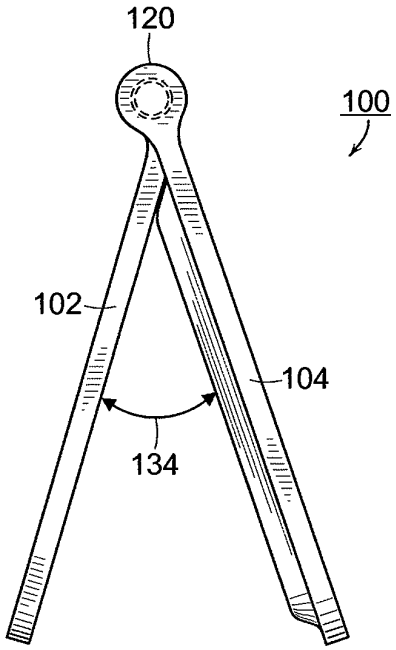

FIG. 5

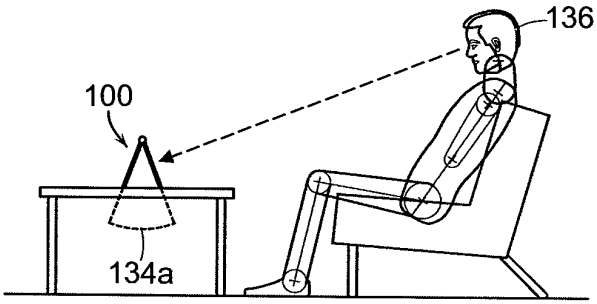

FIG. 6A

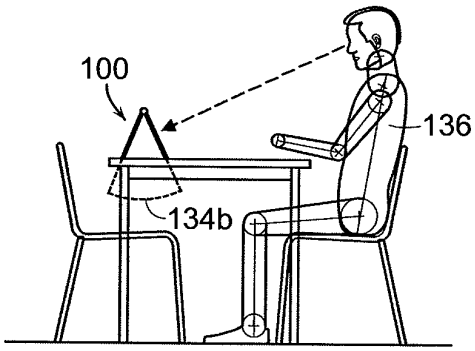

FIG. 6B

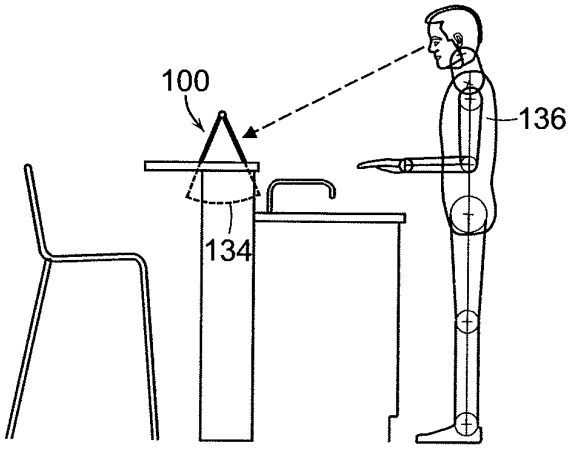

FIG. 6C

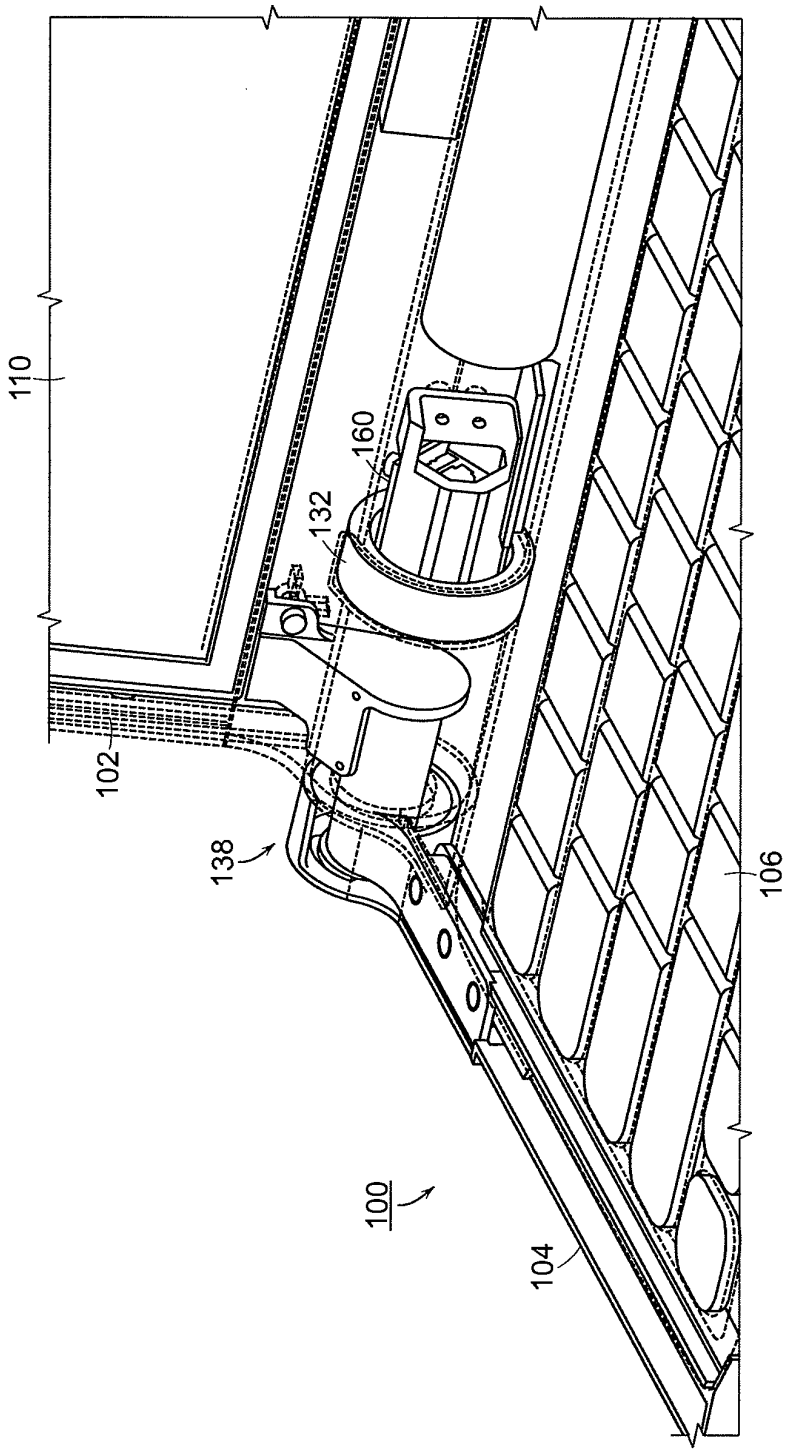

FIG. 7A

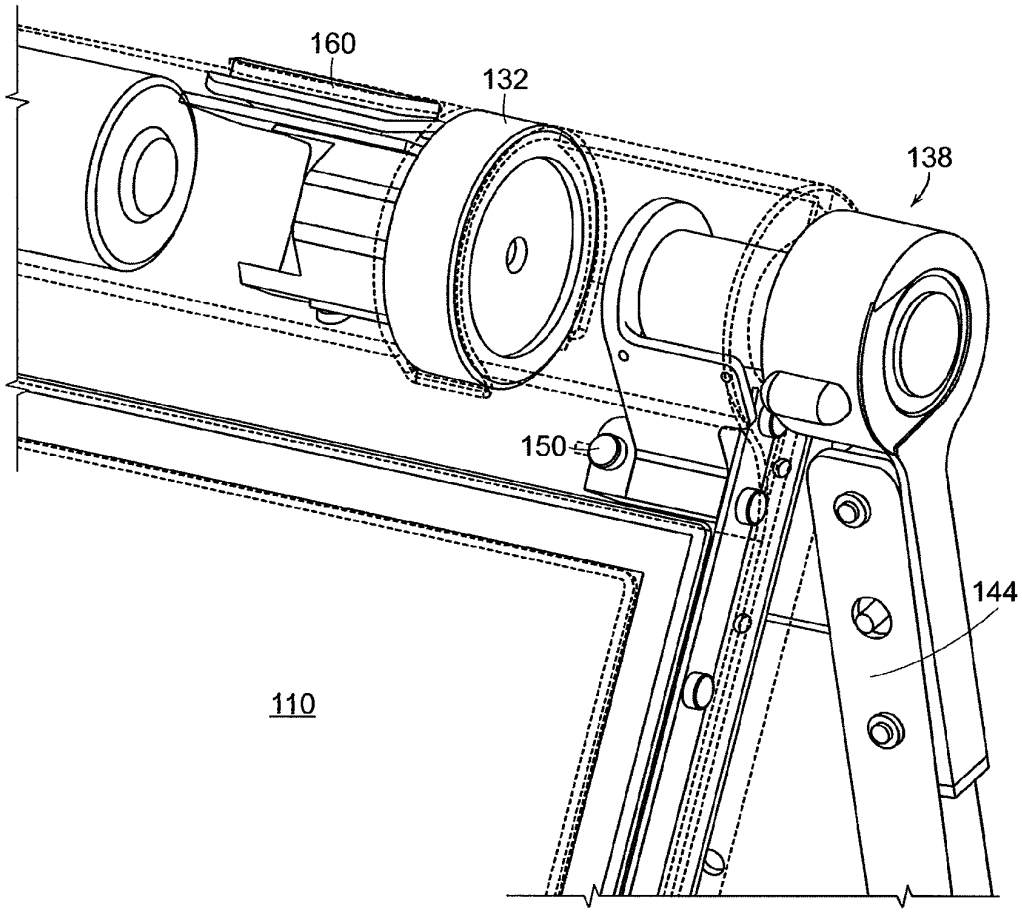

FIG. 7B

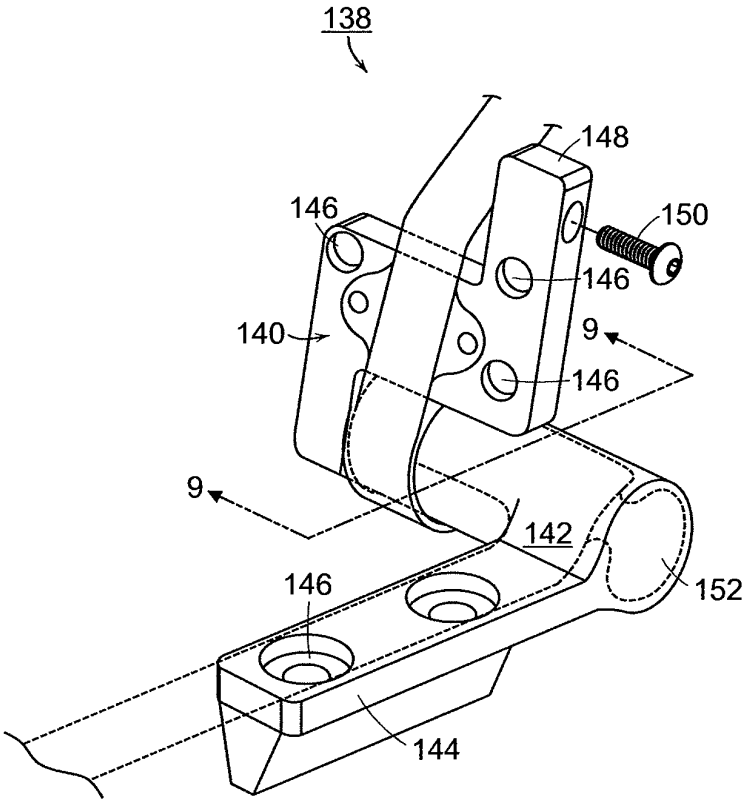

FIG. 8

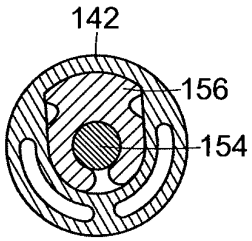

FIG. 9

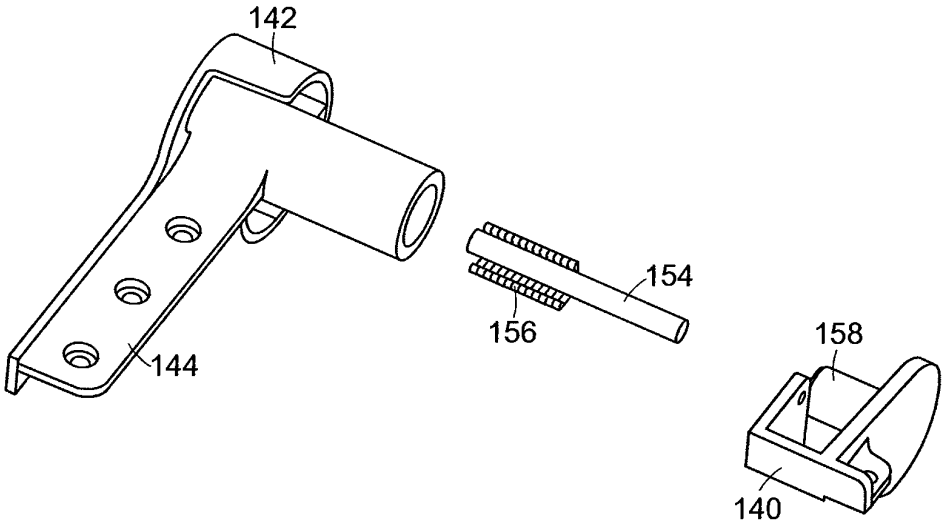

FIG. 10

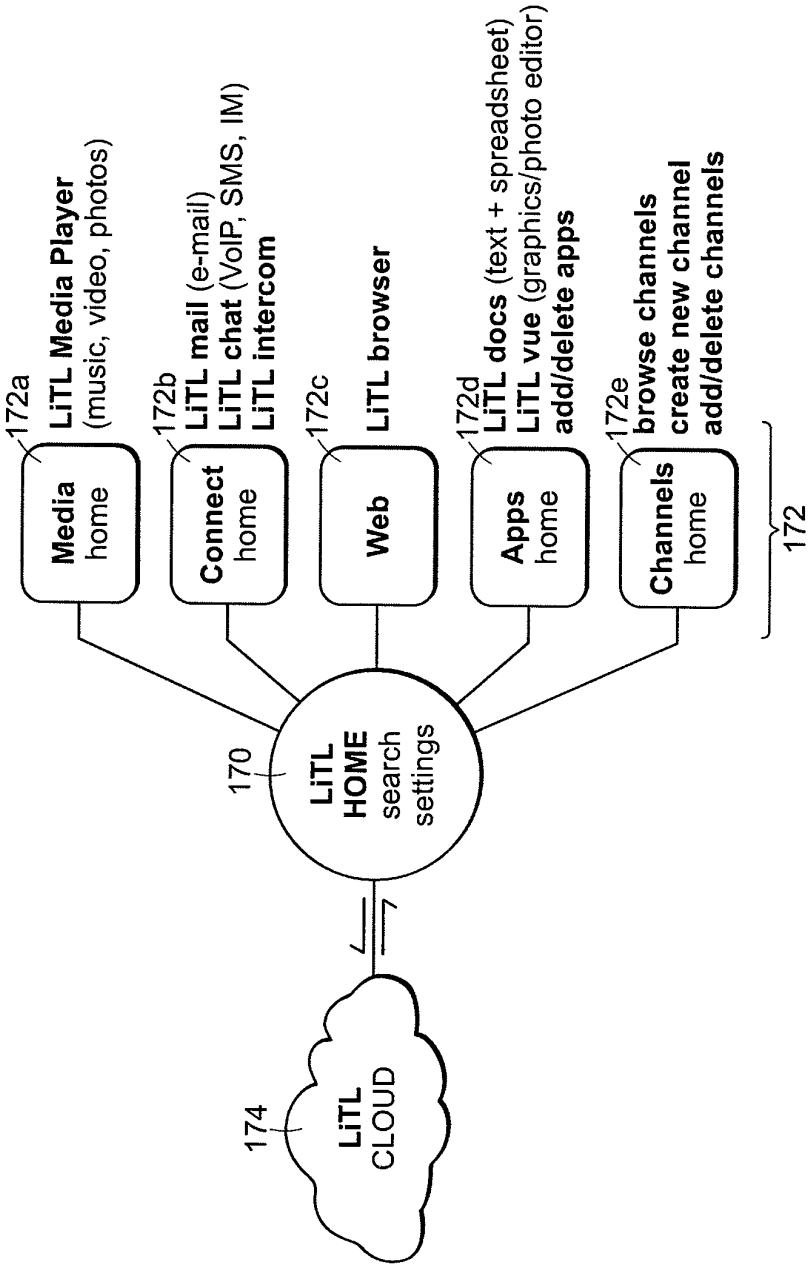
172a
LiTL Media Player
(music, video, photos)
Media
home
172b
LiTL mail (e-mail)
LiTL chat (VoIP, SMS, IM)
LiTL intercom
Connect
home
172c
LiTL browser
Web
172d
LiTL docs (text + spreadsheet)
LiTL vue (graphics/photo editor)
add/delete apps
Apps
home
172e
browse channels
create new channel
add/delete channels
Channels
home
172
170
LiTL
HOME
search
settings
174
LiTL
CLOUD

FIG. 11

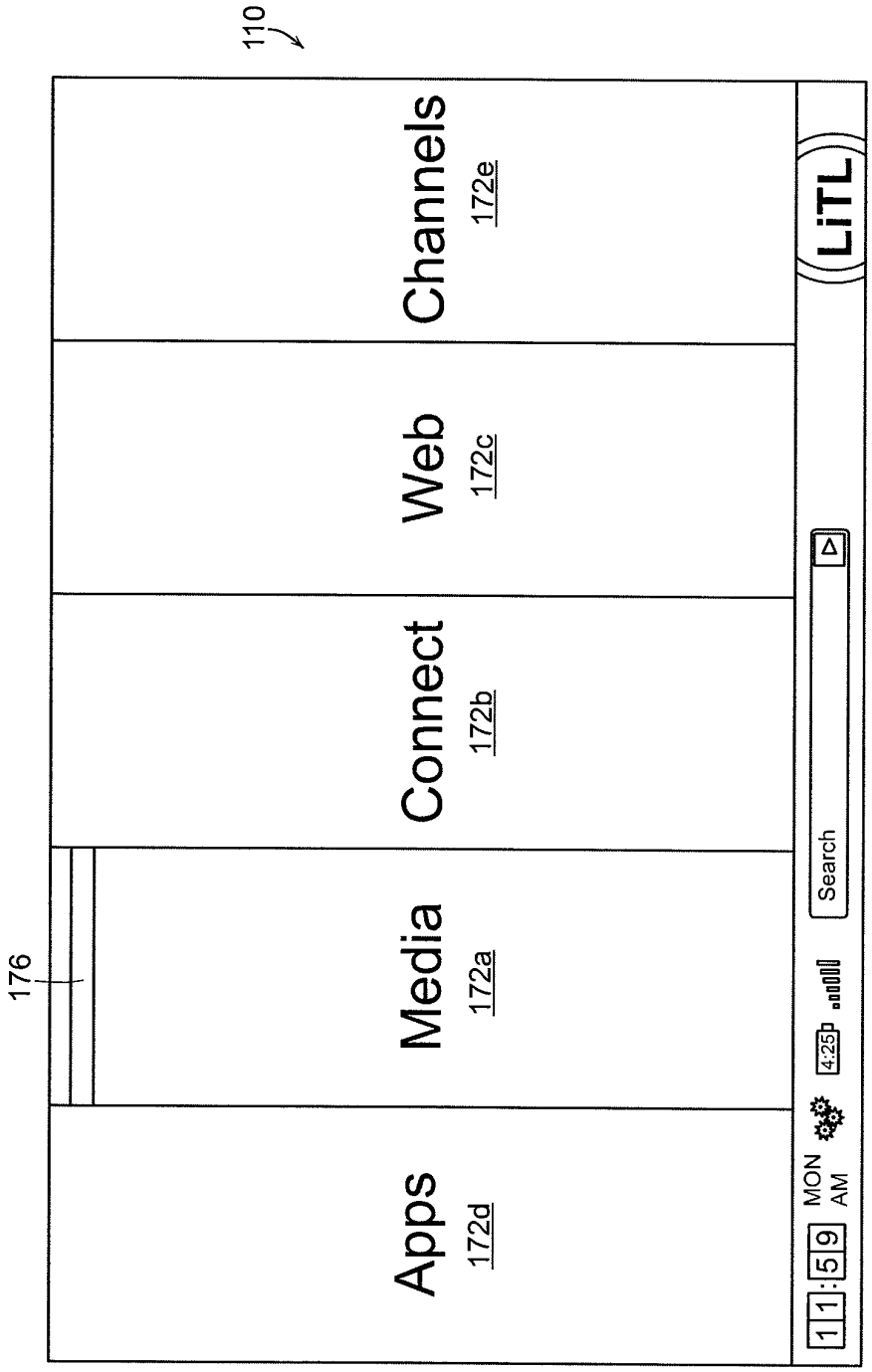
110
176
Apps
172d
Media
172a
Connect
172b
Web
172c
Channels
172e
11:59
MON
AM
4:25
Search
LiTL

FIG. 12

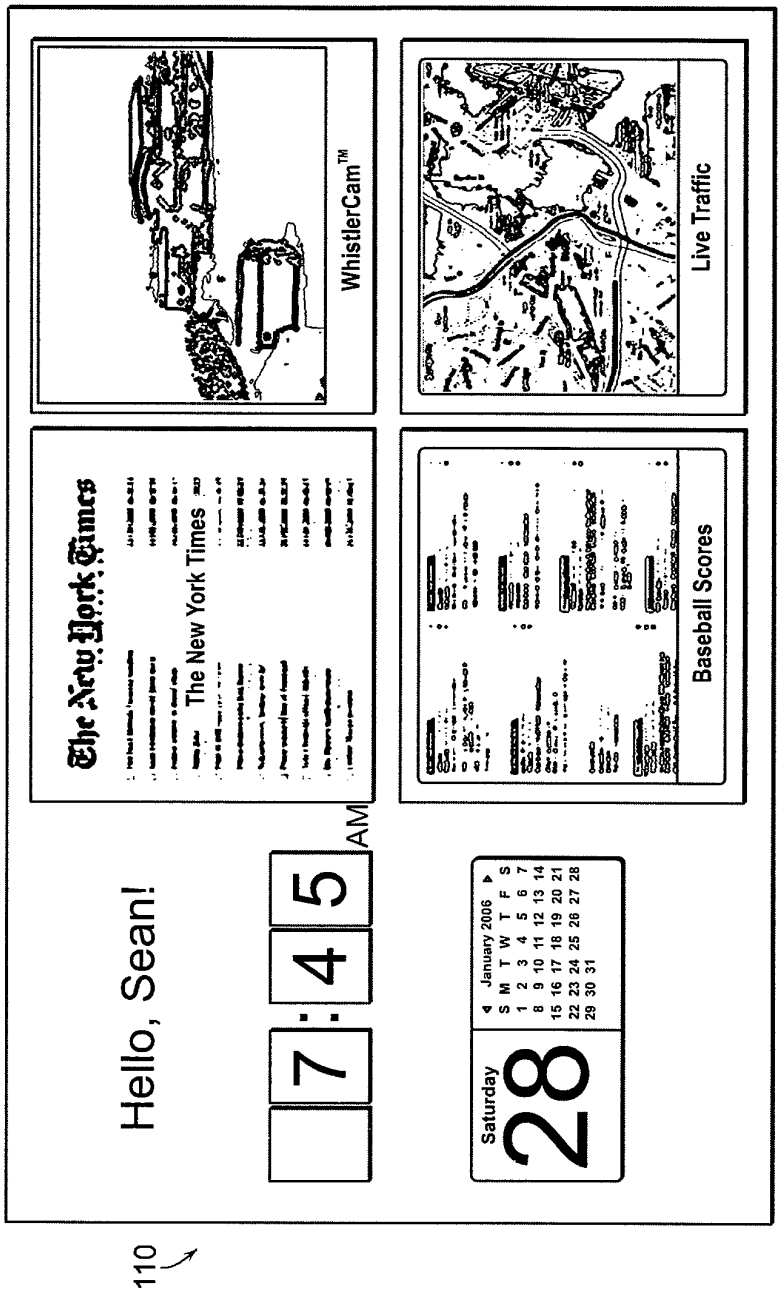
Hello, Sean!
7 : 45 AM
The New York Times
The New York Times
WhistlerCam™
Baseball Scores
Live Traffic
Saturday
28
January 2006
S M T W T F S
1 2 3 4 5 6 7
8 9 10 11 12 13 14
15 16 17 18 19 20 21
22 23 24 25 26 27 28
29 30 31
110

FIG. 13

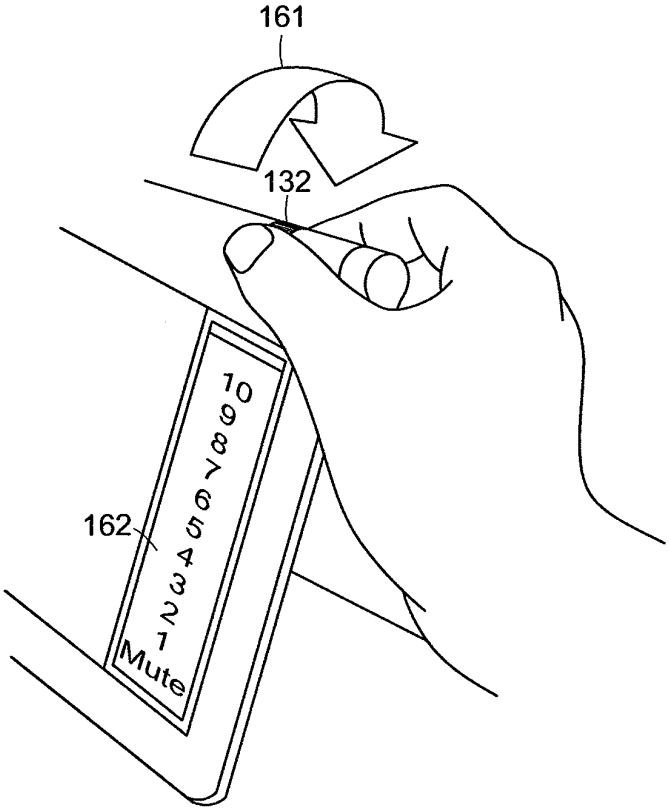

FIG. 14

FIG. 15

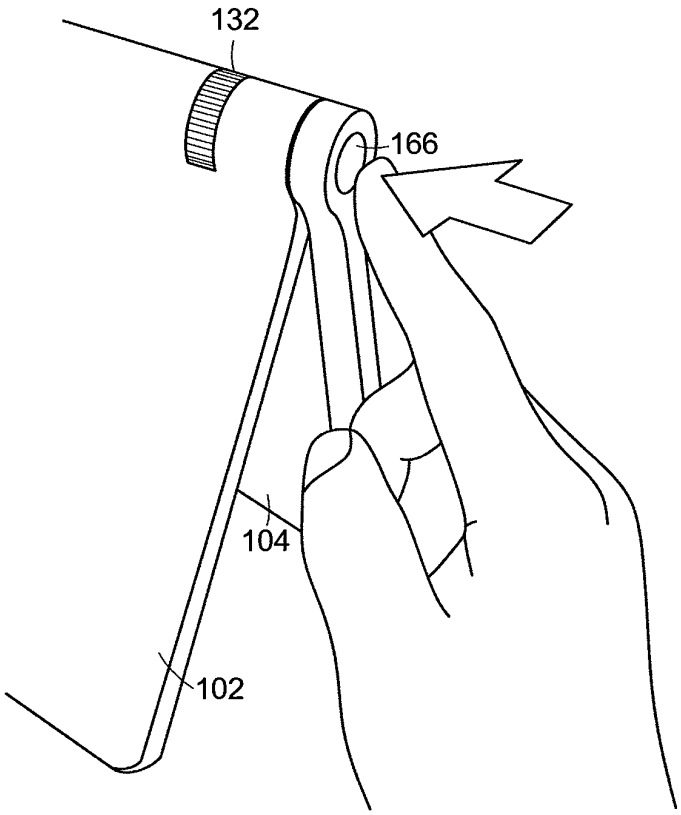

FIG. 16

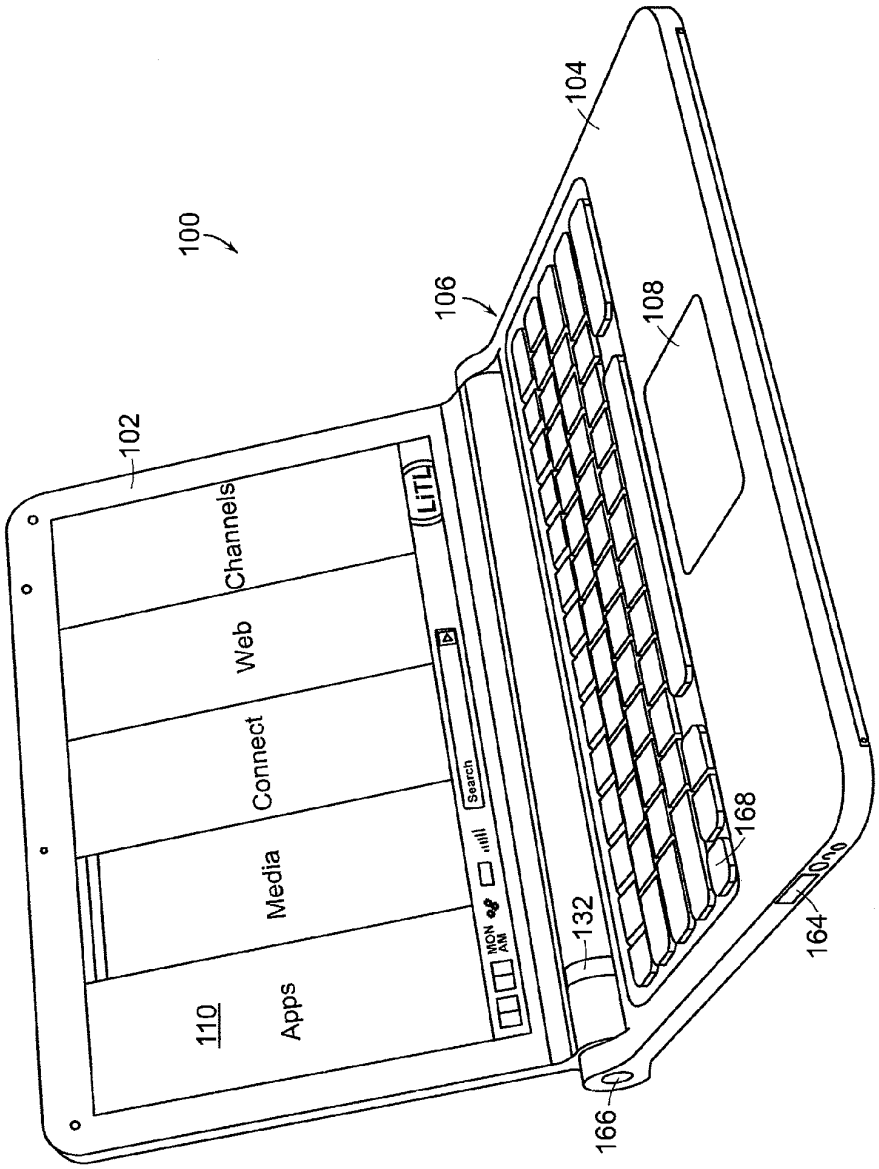
100
102
104
106
108
110
Apps
Media
Connect
Web
Channels
LITL
Search
MON
AM
132
164
166
168

FIG. 17

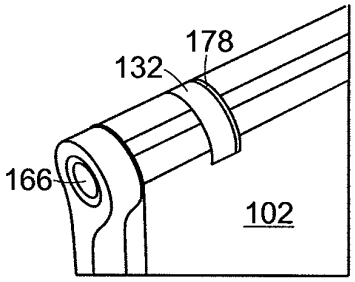

FIG. 18

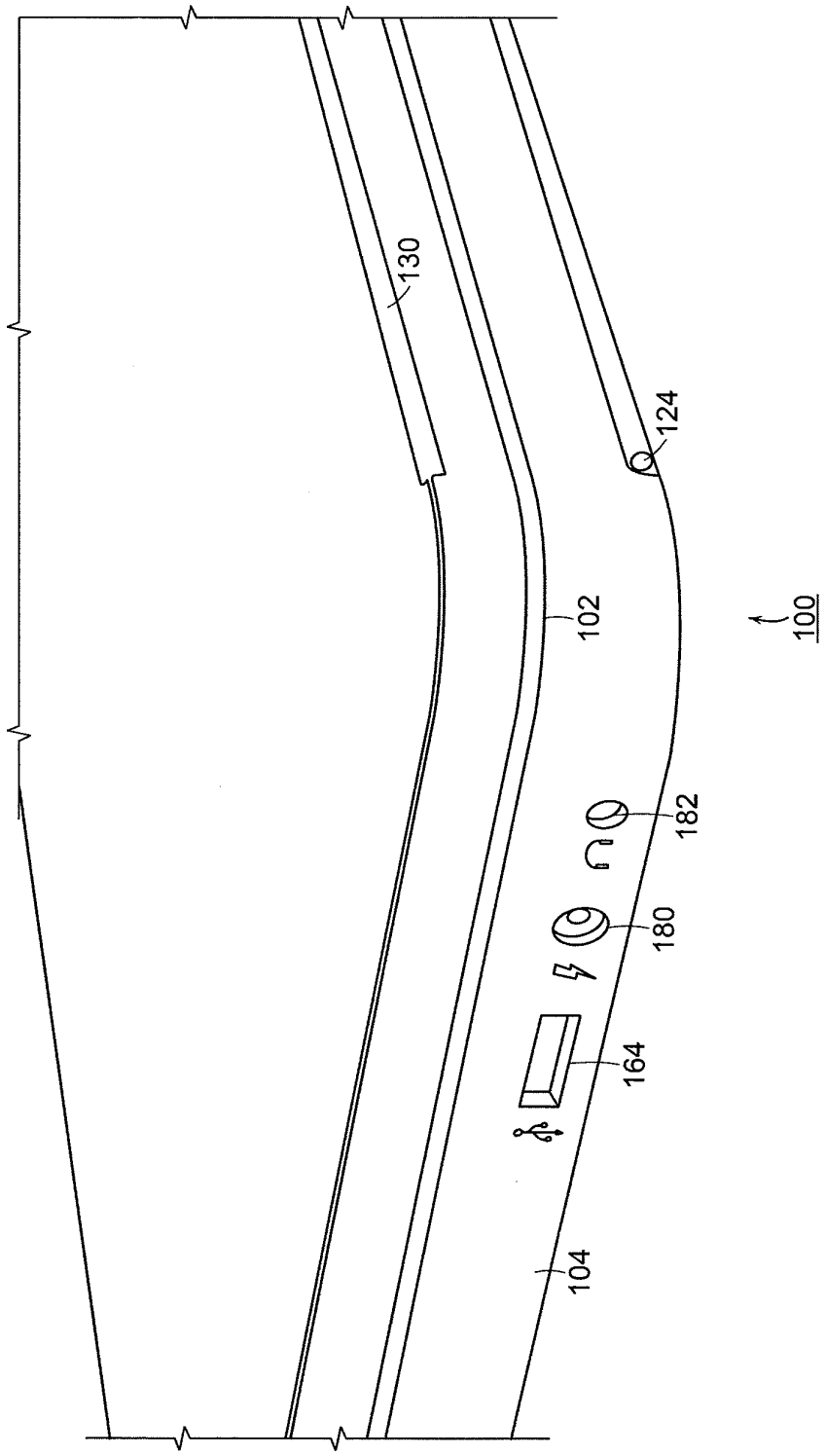

FIG. 19

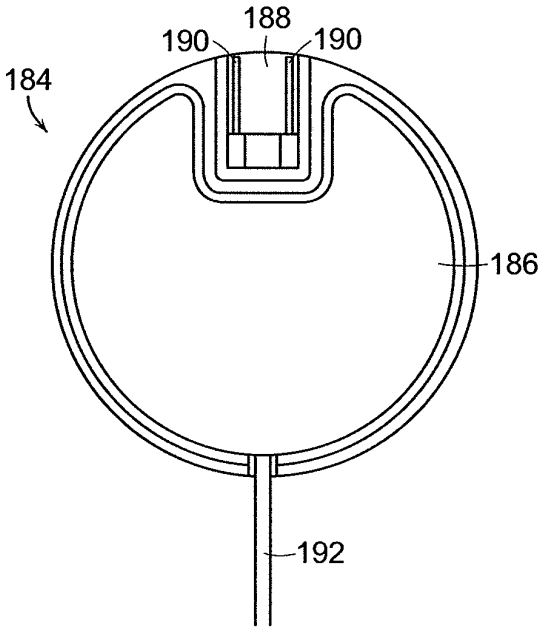

FIG. 20

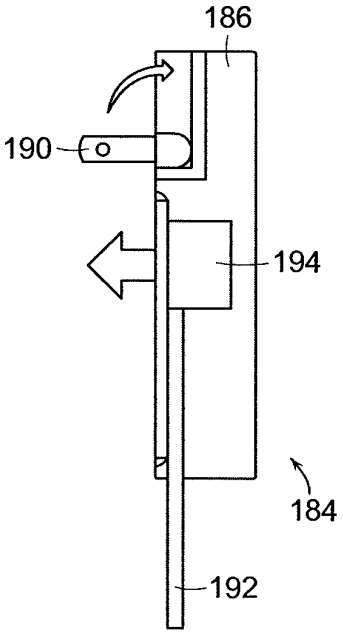

FIG. 21

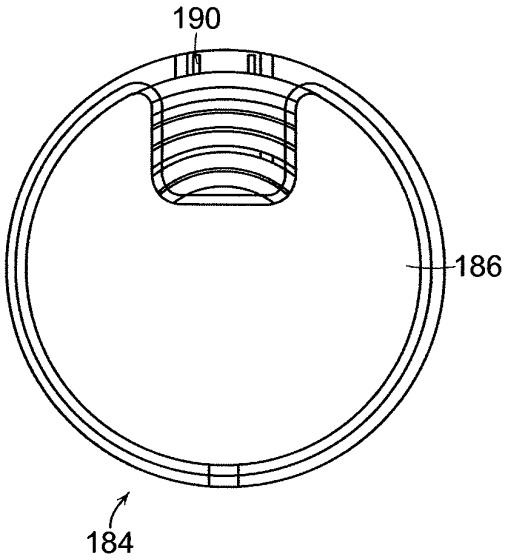

FIG. 22A

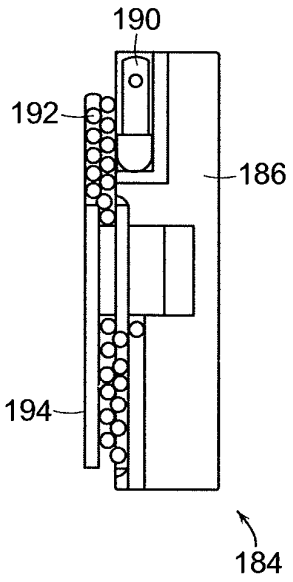

FIG. 22B

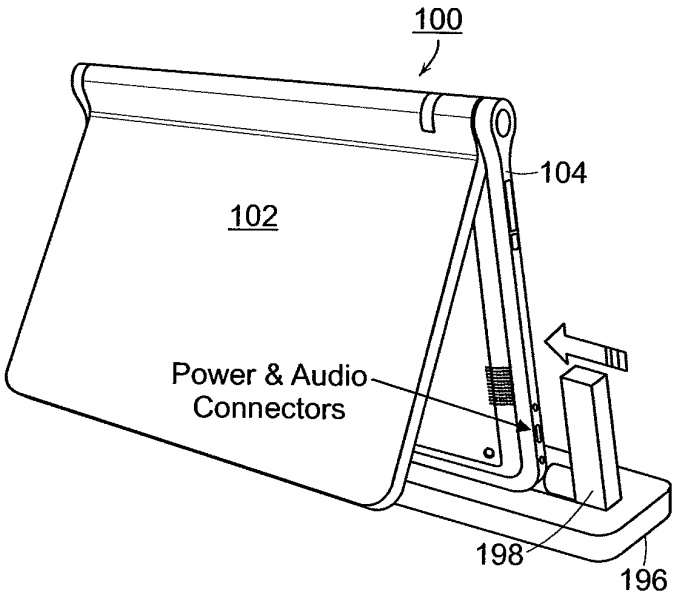

FIG. 23

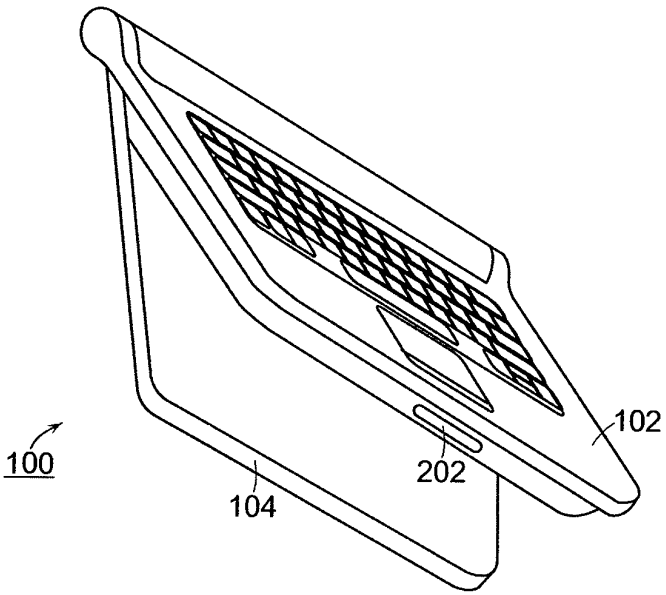

FIG. 24

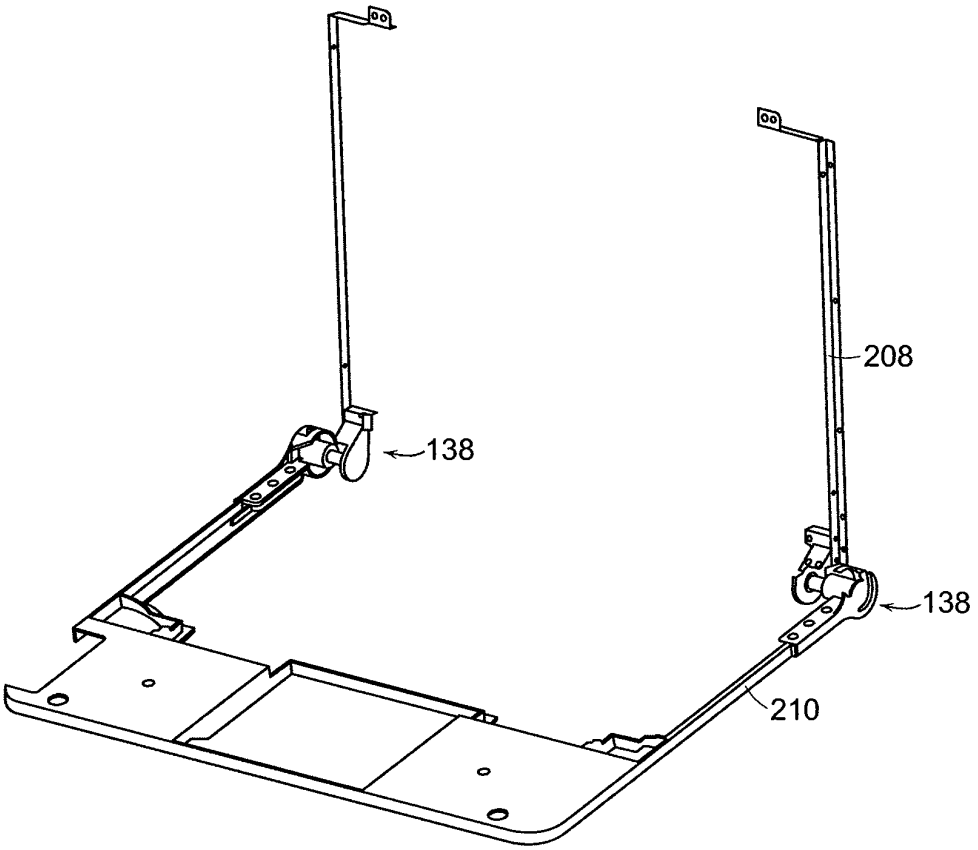

FIG. 25

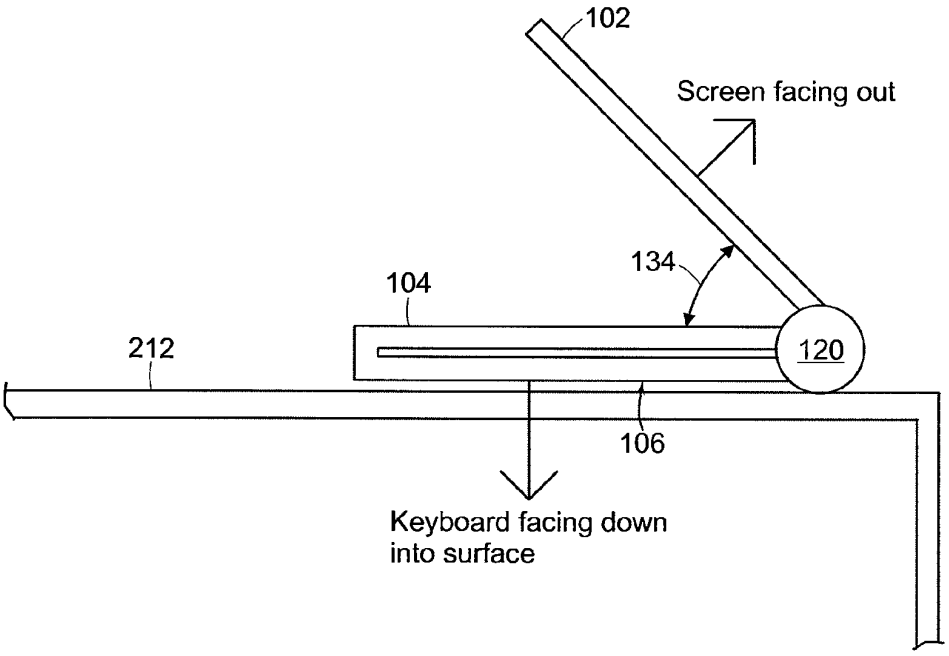
102
Screen facing out
134
104
212
120
106
Keyboard facing down
into surface

FIG. 26

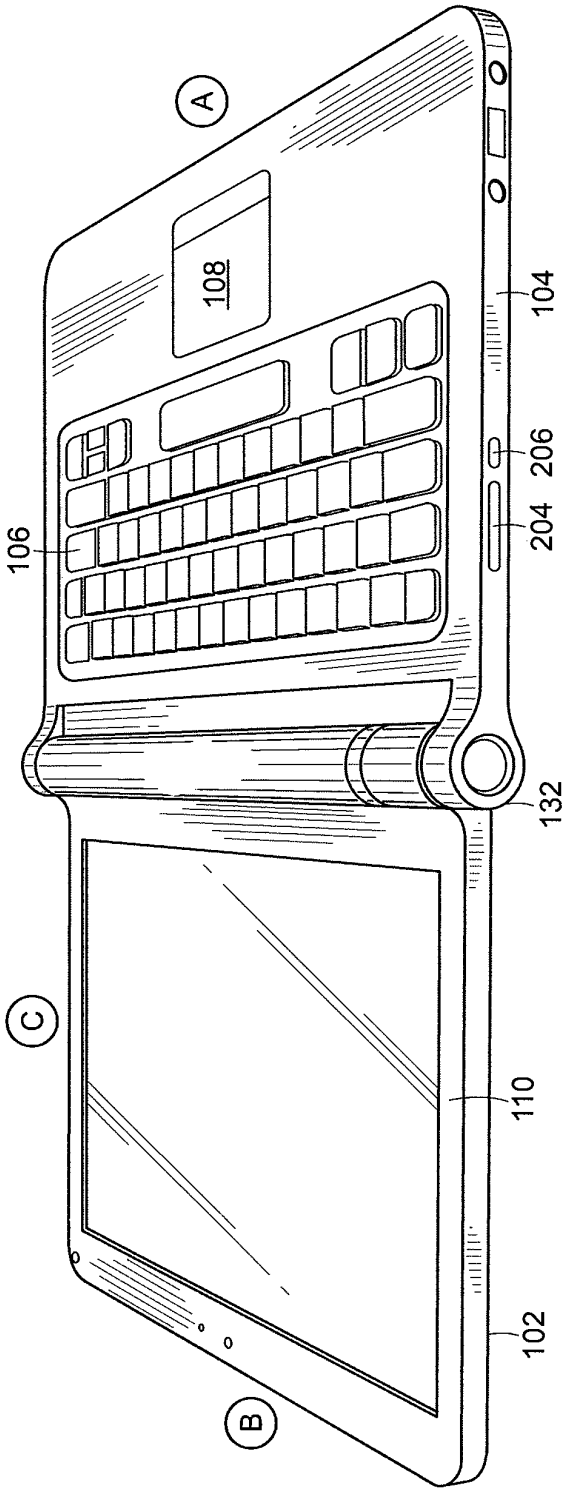

FIG. 27

PORTABLE COMPUTER WITH MULTIPLE DISPLAY CONFIGURATIONS

RELATED APPLICATIONS

This application claims priority under 35 U.S.C. §119(e) to U.S. Provisional Patent Application No. 61/041,365 filed Apr. 1, 2008, entitled "PORTABLE COMPUTER WITH MULTIPLE DISPLAY CONFIGURATIONS," which is incorporated herein by reference in its entirety.

BACKGROUND

1. Field of Invention

The present invention relates generally to portable computers and, more particularly, to a portable computer that is configurable into different functional and positional modes.

2. Discussion of Related Art

Portable computers, such as laptop computers or notebook computers, have become increasingly popular and ubiquitous in the home and workplace. Conventional portable computers most commonly have a "clam-shell" configuration, with a base including the keyboard, various ports, connectors and/or inputs (e.g., for power and connecting peripheral devices), and the majority of the electrical components (e.g., the central processing unit and memory), and a display component pivotably coupled to the base by a hinge. The display component is movable about the hinge between a closed position, with the display screen positioned adjacent the keyboard, and an open position, with the display screen inclined at a desired viewing angle.

Some portable computers are able to accept user inputs via a touch screen in addition to via conventional tools, such as a keyboard or mouse. The use of a touch screen to input data is sometimes referred to as operating in "tablet mode" because the computer is being used in a manner similar to a tablet of paper. U.S. Pat. No. 6,771,494 discloses a hybrid tablet-type portable computer that is capable of operating either as a normal laptop computer receiving user input via a keyboard ("laptop mode"), or as a tablet computer receiving user input via a touch screen. The '494 patent further discloses that the display component of the computer is attached to the base of the computer by hinges that allow the display to be tilted relative to the base (for laptop mode), and to be rotated and folded against the base to configure the computer into tablet mode.

Another variation of a portable computer with a moveable display is disclosed in U.S. Pat. No. 6,266,236. The '236 patent discloses a computer including a base, a display member and an arm assembly coupling the display member to the base. According to the '236 patent, the arm assembly allows pivotable movement of the display member between a plurality of positions, including a notebook mode configuration, a tablet mode configuration, a presentation mode configuration, and a closed mode.

SUMMARY OF INVENTION

Aspects and embodiments of the present invention are directed to a portable computer that is configurable between a laptop mode (in which the portable computer has a conventional laptop appearance) and an easel mode in which the base of the computer and its display component stand upright forming an inverted "V," as discussed further below. The display component is pivotably coupled to the base of the portable computer by a hinge that allows the display component to be rotated or tilted about a longitudinal axis running

along an interface between the base and the display component. Unlike the computers discussed in U.S. Pat. Nos. 6,266,236 and 6,771,494 above, the portable computer according to embodiments of the invention does not require an arm assembly, nor multiple, different hinge assemblies to be configured into the different modes. Furthermore, the portable computer according to embodiments of the invention is capable of different display modes and different functionality in the different configurations, as discussed below.

Further aspects and embodiments are directed to a portable computer having an embedded scroll wheel that can be configured to allow a user to control various features and functionality of the portable computer. For example, as discussed further below the scroll wheel can be used to navigate among information displayed on the portable computer's display and/or to alter operating modes of the portable computer, and/or to control features such as volume, display brightness, etc.

According to one embodiment, a portable computer is configurable between various modes, including a closed mode, a laptop mode, an easel mode, a flat mode and a frame mode. The portable computer may comprise a display component including a display screen, a base, and a hinge assembly at least partially housed within the base and configured to pivotably couple the display component to the base. The display component may be rotatable about a longitudinal axis running along an interface between the display component and the base. In the closed mode, the display screen may be disposed substantially against the base, and rotating the display component about the longitudinal axis up to approximately 180 degrees from the closed mode may configure the portable computer into the laptop mode. Rotating the display component about the longitudinal axis beyond approximately 180 degrees axis from the closed mode may configure the portable computer into the easel mode.

In one example of the portable computer, the display component is rotatable about the longitudinal axis up to approximately 320 degrees from the closed mode. In another example, the portable computer comprises a display orientation module that displays content on the display screen in one of a plurality of orientations relative to the longitudinal axis. The orientation of the displayed content may be dependent on the current display mode of the portable computer, or may be configurable responsive to a user input. The portable computer may further comprise a mode sensor which detects a current display mode of the portable computer, and the display orientation module may display content on the display screen in an orientation dependent on the current display mode detected by the mode sensor. Depending on the hinge assembly used, the longitudinal axis may comprises multiple parallel axes, and the hinge assembly may be configured to permit rotation of the display component about any of the multiple parallel axes to configure the portable computer between the plurality of display modes.

Another embodiment is directed to a portable computer comprising a base, a display component rotatably coupled to the base, and means for rotating the display component in a single direction relative to the base to configure the portable computer between a laptop mode and an easel mode.

In another embodiment of a portable computer configurable between multiple modes including a laptop mode and an easel mode, the portable computer comprises a display component, a base, and a hinge assembly configured to rotatably couple the display component to the base. The hinge assembly may be configured to permit rotation of the display component about a single axis to configure the portable computer between the laptop mode and the easel mode. In one

example, the single axis is a longitudinal axis running along an interface between the display component and the base. The portable computer may further comprise a scroll wheel disposed at least partially about the longitudinal axis. In one example, the display component comprises a display screen, and the scroll wheel is configured to permit a user to manipulate content displayed on the display screen.

Another embodiment is directed to a method of automatically orienting content displayed on a portable computer. The method comprises rotating a display component of the portable computer about a longitudinal axis running along an interface between the display component and a base of the portable computer, detecting a degree of rotation of the display component relative to the base, providing a signal representative of the degree of rotation of the display component, and automatically configuring an orientation, relative to the longitudinal axis, of the content displayed on the portable computer responsive to the signal.

According to another embodiment, a portable computer comprises a base unit, a display unit including a display screen configured to display content, an orientation sensor which detects an orientation of the display unit relative to the base unit, and a display orientation module which orients the content displayed on the display screen responsive to the orientation detected by the orientation sensor.

Another embodiment of a portable computer comprises a base, a display component rotatably coupled to the base such that the display component and the base are rotatable with respect to one another about a longitudinal axis running along an interface between the display component and the base, the display component including a display screen, and a scroll wheel disposed at least partially within the base and rotatable about the longitudinal axis, the scroll wheel configured to permit a user to control at least one of operating parameters of the portable computer and content displayed on the display screen. In one example, the scroll wheel is configured to permit the user to adjust a volume of sound produced by the portable computer. In another example, the screen is configured to display at least one of a plurality of modes of content, and the scroll wheel is configured to permit the user to select a mode of content for display by the portable computer. The portable computer may further comprise one or more navigation buttons that may be used in conjunction with the scroll wheel to control aspects of the portable computer and displayed content.

According to another embodiment, a portable computer is configurable between a plurality of display modes including a laptop mode and an easel mode, the portable computer comprising a base, a display component rotatably coupled to the base and including a screen which displays content, and a scroll wheel accessible in each of the plurality of display modes and configured to permit a user to manipulate at least one of operating parameters of the portable computer and the content displayed on the screen. In one example, the scroll wheel is disposed at leas partially about an axis of rotation of the display component relative to the base.

In another embodiment, a portable computer comprises a base, a display component including a screen configured to display content, a hinge assembly configured to rotatably couple the display component to the base and to permit rotation of the display component about a longitudinal axis running along an interface between the display component and the base, and a scroll wheel disposed at least partially about the longitudinal axis.

Still other aspects, embodiments, and advantages of these exemplary aspects and embodiments, are discussed in detail below. Moreover, it is to be understood that both the foregoing information and the following detailed description are merely illustrative examples of various aspects and embodiments, and are intended to provide an overview or framework for understanding the nature and character of the claimed aspects and embodiments. Any embodiment disclosed herein may be combined with any other embodiment in any manner consistent with the objects, aims, and needs disclosed herein, and references to "an embodiment," "some embodiments," "an alternate embodiment," "various embodiments," "one embodiment" or the like are not necessarily mutually exclusive and are intended to indicate that a particular feature, structure, or characteristic described in connection with the embodiment may be included in at least one embodiment. The appearances of such terms herein are not necessarily all referring to the same embodiment. The accompanying drawings are included to provide illustration and a further understanding of the various aspects and embodiments, and are incorporated in and constitute a part of this specification. The drawings, together with the remainder of the specification, serve to explain principles and operations of the described and claimed aspects and embodiments.

BRIEF DESCRIPTION OF THE DRAWINGS

Various aspects of at least one embodiment are discussed below with reference to the accompanying figures, which are not intended to be drawn to scale. Where technical features in the figures, detailed description or any claim are followed by references signs, the reference signs have been included for the sole purpose of increasing the intelligibility of the figures, detailed description, and claims. Accordingly, neither the reference signs nor their absence are intended to have any limiting effect on the scope of any claim elements. In the figures, each identical or nearly identical component that is illustrated in various figures is represented by a like numeral. For purposes of clarity, not every component may be labeled in every figure. The figures are provided for the purposes of illustration and explanation and are not intended as a definition of the limits of the invention. In the figures:

FIG. **1** is an illustration of one example of a portable computer, according to aspects of the invention, in a "laptop" configuration;

FIG. **2** is a view of the portable computer of FIG. **1** in the closed position;

FIG. **3** is a plan view of the exterior of the bottom of the portable computer of FIG. **1**;

FIG. **4** is a perspective view of the portable computer of FIG. **1** in the easel mode;

FIG. **5** is a side view of the portable computer of FIG. **4**, illustrating the adjustable angle of the easel mode;

FIGS. **6**A-C are diagrams illustrating different positions of the portable computer of FIG. **4** in easel mode;

FIG. **7**A is an illustration of a portion of the portable computer of FIG. **1** in the laptop mode, illustrating a hinge assembly according to aspects of the invention;

FIG. **7**B is an in illustration of a portion of the portable computer of FIG. **1** in the easel mode, illustrating the hinge assembly according to aspects of the invention;

FIG. **8** is a diagram of one example of the hinge assembly of FIGS. **7**A and **7**B;

FIG. **9** is a cross-sectional diagram of a portion of the hinge assembly of FIG. **8**, taken along line **9-9** in FIG. **8**;

FIG. **10** is an exploded view of the hinge assembly of FIG. **8**;

FIG. **11** is a block diagram of one example of a portable computer user interface architecture, according to aspects of the invention;

FIG. **12** is a screen shot illustrating one example of a graphical user interface, according to aspects of the invention;

FIG. **13** is a screen shot illustrating another example of a graphical user interface according to aspects of the invention;

FIG. **14** is an illustration of a user adjusting the scroll wheel on a portable computer in the easel mode, according to aspects of the invention;

FIG. **15** is an illustration of a user pressing the scroll wheel on a portable computer, according to aspects of the invention;

FIG. **16** is an illustration of a user pressing a navigation button on the portable computer, according to aspects of the invention;

FIG. **17** is an illustration of an example of the portable computer in the laptop mode, according to aspects of the invention;

FIG. **18** is a view of a portion of the portable computer illustrating a wireless signal indicator feature, according to aspects of the invention;

FIG. **19** is a view of a portion of the portable computer in the closed position, according to aspects of the invention;

FIG. **20** is a plan view of one example of a power adaptor, according to aspects of the invention;

FIG. **21** is a side view of the power adaptor of FIG. **20**;

FIG. **22**A is another side view of the power adaptor of FIG. **20**, illustrating the power cord would around a cord spool, according to aspects of the invention;

FIG. **22**B is a plan view of the power adaptor of FIG. **22**A

FIG. **23** is an illustration of the portable computer coupled to a docking station, according to aspects of the invention;

FIG. **24** is an illustration of the portable computer showing one example of a docking connector, according to aspects of the invention;

FIG. **24** is an illustration of a hinge assembly coupled to a computer frame, according to aspects of the invention;

FIG. **26** is an illustration of the portable computer configured into a "frame" mode, according to aspects of the invention; and

FIG. **27** is an illustration of the portable computer configured into a "flat" mode, according to aspects of the invention.

DETAILED DESCRIPTION

Aspects and embodiments are directed to a portable computer that is configurable between different operating modes, including a laptop mode (in which the portable computer has a conventional laptop appearance), a flat mode, a frame mode, and an easel mode in which the base of the computer and its display component stand vertically forming an inverted "V," as discussed further below. The portable computer is capable of different display formats and functionality in the different modes, and includes a graphical user interface that may work seamlessly with the computer hardware to provide a unified, comfortable, holistic user experience. In particular, the portable computer may provide access to a wide array of functions, both those traditionally provided by computing devices and those traditionally provided by other passive information devices. For example, the hardware and software, including the graphical user interface, of the portable computer may be focused toward providing access to entertainment media, such as audio and video (e.g., playing music, streaming video, viewing photographs, etc.), email, and internet, while also providing state-of-the-art computer processing capability.

It is to be appreciated that embodiments of the methods and apparatuses discussed herein are not limited in application to the details of construction and the arrangement of components set forth in the following description or illustrated in the accompanying drawings. The methods and apparatuses are capable of implementation in other embodiments and of being practiced or of being carried out in various ways. Examples of specific implementations are provided herein for illustrative purposes only and are not intended to be limiting. In particular, acts, elements and features discussed in connection with any one or more embodiments are not intended to be excluded from a similar role in any other embodiments. Also, the phraseology and terminology used herein is for the purpose of description and should not be regarded as limiting. Any references to embodiments or elements or acts of the systems and methods herein referred to in the singular may also embrace embodiments including a plurality of these elements, and any references in plural to any embodiment or element or act herein may also embrace embodiments including only a single element. References in the singular or plural form are not intended to limit the presently disclosed systems or methods, their components, acts, or elements. The use herein of "including," "comprising," "having," "containing," "involving," and variations thereof is meant to encompass the items listed thereafter and equivalents thereof as well as additional items. References to "or" may be construed as inclusive so that any terms described using "or" may indicate any of a single, more than one, and all of the described terms.

Referring to FIG. **1**, there is illustrated one example of a portable computer according to aspects of the invention. In FIG. **1**, the portable computer **100** is illustrated in the "laptop" mode, with the display component **102** inclined at a viewing angle from the base **104**. The display component **102** is pivotably coupled to the base **104** by a hinge assembly (not shown) that allows the display component to be rotated with respect to the base. The hinge assembly may include a single or multiple hinges, which may be any of a variety of hinge types, including, but not limited, to single-axis hinges, multiple-axis hinges, geared hinges, etc. In one example, the hinge assembly allows the display component **102** to be rotated (or tilted) about a longitudinal axis **101** running along an interface between the display component and the base **104**, as illustrated in FIG. **1** and discussed further below. The base **104** includes a keyboard **106** and internal electronic components (not shown), such as a central processing unit, memory, and other components necessary to operate the portable computer, as known to those skilled in the art. In some embodiments, the base **104** may also include a touch pad **108** or trackball (not shown) for receiving user commands, as known to those skilled in the art.

Still referring to FIG. **1**, the display component **102** includes a display screen **110**, and may also include a camera **112**, microphone **114**, and infrared receiver **116**, as discussed further below. It is to be appreciated that the locations of the camera **112**, microphone **114** and infrared receiver **114** are not limited to the example illustrated in FIG. **1**, and may be placed in other locations on the display component **102** and/or base **104**, as would be recognized by those skilled in the art. The display component **102** may also include cushions **118** that provide soft contact points between the base **104** and the display component **102** when the portable computer is closed. In one example, the cushions **118** are made of rubber. However, it is to be appreciated that the invention is not so limited, and the cushions **118** may comprise materials other than rubber, including, for example, a polymer, felt, or other suitable materials as would be recognized by those skilled in the art.

Referring to FIG. **2**, there is illustrated a side view of the portable computer **100** of FIG. **1** in the closed configuration. As is the case for conventional clam-shell type portable computers, when the portable computer **100** is closed, the display screen is disposed "face down" against the keyboard of the

base **104**. In the illustrated embodiment, the base **104** includes a rounded portion **120** that houses the hinge (not shown) that pivotably couples the display component **102** to the base, as discussed further below. It is to be appreciated that the rounded portion **120** is not limited to having a round shape, but may instead have another shape, which may be dependent on the type of hinge used. In one embodiment, a power button **122**, configured to turn the portable computer ON and OFF, may also be provided on the rounded portion **120**, as illustrated in FIG. **2**. However, it is to be appreciated that the invention is not so limited, and the power button **122** may be located elsewhere on the base **104**. In one example, the power button **122** may be slightly recessed relative to the surface of the base **104**, so as decrease the potential for the power button to be accidentally pressed.

An exterior view of the bottom of the base **104** (the underside of the portable computer **100**) is illustrated in FIG. **3**. As can be seen in FIG. **3**, in one embodiment, the base **104** includes a plurality of feet **124**. In one example, the feet **124** are made of rubber; however, it is to be appreciated that the invention is not so limited and the feet may be made of another material, such as, for example, a polymer or felt. A ventilation slit **126** may be provided near an interface between the base **104** and the display component **102**, as illustrated, or elsewhere as may be desired, to allow heat to dissipate from the internal electronic components in the base. The base **104** may also include one or more speakers **128**. In one example, the base **104** includes two stereo speakers **128**, positioned at either side of the base, as illustrated in FIG. **3**; however, it is to be appreciated that the portable computer **100** may comprise more or fewer speakers which may be placed at any location on the base **104**. A scroll wheel **132** may be provided to allow a user to control certain functionality of the portable computer **100**, such as navigating web pages, controlling speaker volume, selecting programs, etc., as discussed further below.

According to one embodiment, the base **104** may comprise a cushioning strip **130** disposed along an edge of the base **104** opposite to the interface between the display component **102** and the base, as illustrated in FIG. **3**. The cushioning strip **130**, which may comprise rubber, a polymer, or another suitable material, may serve as a "foot" when the portable computer is configured into the easel mode, as discussed further below. In one embodiment, the display component **102** may be provided with a similar cushioning strip that may serve as a second supporting foot when the portable computer is configured into the easel mode.

Referring to FIG. **4**, there is illustrated an example of the portable computer **100** configured into the easel mode. To convert the portable computer **100** from the laptop mode (or closed position) into the easel mode, the display component **102** may be folded away from the base **104**, in the same direction as to open the computer (i.e., to configure the computer from the closed position into the laptop mode) such that the base **104** and the display component **102** form an inverted "V" shape with the bottom of the base and the back of the display component face another, as illustrated in FIG. **4**. In the easel mode, the display screen **110** is visible and accessible on one side of the portable computer **100** and the keyboard **106** (not shown in FIG. **4**) is visible and accessible on the other side.

As illustrated in FIG. **4**, in one embodiment, the portable computer may comprise integrated hardware volume controls, including a volume control button **204** and a mute button **206**. In one example, the volume control button **204** may be a rocker switch that allows a user to easily increase or decrease the volume of audio played through the speakers **128**. When the user presses the volume control button **204**, a volume indicator may temporarily appear on the display screen **110**, to provide a visual indication of the amount by which the volume is being increased or decreased. Similarly, pressing the mute button **206** may cause a visual indication that the volume is muted to appear on the display screen **110**.

According to one embodiment, when the portable computer **100** is configured into the easel mode, the visual display on the display screen **110** is automatically rotated 180 degrees such that the information appears "right-way-up," even through the display screen is upside-down compared to when the portable computer is in the laptop mode. Thus, a user may simply "flip" the portable computer **100** into the easel mode and immediately be able to comfortably view information on the display screen **110**, without having to access display screen controls to adjust the orientation of the visual display. In one embodiment, the portable computer **100** includes an orientation (or mode) sensor that is configured to detect whether the portable computer is in the laptop mode or the easel mode, and to adjust the display accordingly. The orientation sensor may be incorporated into the base component **104**, for example, underneath the keyboard **106**, or into the display component. In one example, locating the orientation sensor in the display component **102**, rather than the base **104**, may provide more robust detection and therefore, may be presently preferred in some embodiments. The orientation sensor may be used to determine a precise relative orientation of the base component **104** with respect to the display component **102**, or vice versa, for example, to determine whether the device is in the laptop mode, easel mode, or some point in between the two modes. In one example, the orientation sensor includes an accelerometer whose output is fed to the computer operating system (or to dedicated logic circuitry) which then triggers a display inversion as appropriate.

Accelerometers have been used in portable devices such as cellular phones, media players or computers, as sudden motion sensors, or "drop detectors," to protect against hard drive crashes in the event that the device is dropped. By contrast, however, the accelerometer in the portable computer according to an embodiment of the invention is not used to detect motion of the overall computer, but rather to detect a configuration of the portable computer **100** (e.g., laptop mode or easel mode), particularly, to detect an orientation of the display component **102** relative to the base component **104**. In one example, information from the accelerometer is provided to a display controller in the portable computer and used to switch the display between portrait or landscape mode, as is done in some conventional devices.

Referring to FIG. **5**, when the portable computer **100** is in the easel mode, the base **104** is disposed at an angle **134** to the display component **102**. This angle **134** is adjustable, for example, to allow a comfortable viewing angle to the display screen **110** to be maintained for different positions of a user **136** and of the portable computer **100**, as illustrated in FIGS. **6**A, **6**B and **6**C. For example, when the user **136** is further from the portable computer, the angle **134**a (FIG. **6**A) may be made smaller than the angle **134**b when the user is closer to the portable computer (FIG. **6**B). As discussed above, in one example, the orientation sensor (not shown) may be used to detect, either approximately or precisely, the angle **134** and to provide the information to the computer operating system.

According to one embodiment, the display component **102** is pivotably coupled to the base **104** by a hinge that allows the display component to be moved relative to the base so as to allow the portable computer **100** to be configured into the closed position, the laptop mode or the easel mode. As discussed above, in conventional "clamshell" type portable com-

puters, the hinges that couple the display component to the base generally do not permit more than about 180 degrees of rotation of the display component. Thus, these conventional portable computers can be in a closed position or open, laptop configuration, but cannot be configured into an easel mode because the conventional hinges do not permit sufficient movement of the display component. Similarly, the tablet-type portable computers discussed above have displays that can be opened, rotated and folded such that they lie flat against the keyboard on the base, but cannot be configured into an easel mode. Although, as discussed above, U.S. Pat. No. 6,266,236 discloses a computer that is configurable into a presentation mode, this requires a complex arm assembly. By contrast, the portable computer according to embodiments of the present invention may be configured into the easel mode by simply continuing to tilt or rotate the display component past the "laptop positions" until a desired easel angle **134** is reached.

Referring to FIGS. **7**A and **7**B, there is illustrated a portion of the portable computer **100** illustrating a hinge assembly **138** that allows the portable computer to be configured into either the laptop mode (FIG. **7**A) or the easel mode (FIG. **7**B), according to aspects of the invention. According to one embodiment, the hinge assembly **138** accommodates 0-320 degrees of rotation, allowing a minimum angle **134** (see FIG. **5**) of 40 degrees. However, it is to be appreciated that the hinge assembly **138** may allow greater or fewer degrees of rotation, provided only that sufficient rotation is allowed so as to configure the portable computer **100** into either the laptop mode or the easel mode. As discussed above, in one embodiment the portable computer **100** includes an orientation sensor (not shown) that is configured to detect a relative orientation of the display component **102** and the base component **104**. In one example, the orientation sensor may be an accelerometer incorporated into the base component **104**, as discussed above. Alternatively, the orientation sensor may be incorporated into the hinge assembly **138** and may be used to detect movement of the hinge assembly, and to translate that movement into an information about the relative orientation of the display component **102** and the base component **104** (for example, a size of the angle **134**). It is also to be appreciated that the orientation sensor may include electronic or mechanical components, or a combination thereof. For example, the hinge assembly may be provide with detents that provide an indication of the mode of the portable computer.

As discussed above, and also illustrated in FIGS. **7**A and **7**B, the portable computer may also comprise a scroll wheel **132** that allows a user to adjust, control and/or select various aspects of the portable computer (e.g., wireless capability or speaker volume) or items displayed on the display screen **110**. A housing **160** may contain or support various mechanical and/or electronic components (not shown) that are coupled to the scroll wheel **132** and are configured to convert physical movement of the scroll wheel into electrical signals. These electrical signals may be provided to the central processing unit of the portable computer **100** which processes the electrical signals so as to translate movement of the scroll wheel into control of a selected feature, for example, adjusting the volume of the speaker(s) or selecting a particular item displayed on the display screen, as discussed further below.

One embodiment of the hinge assembly **138** is illustrated in FIG. **8**. The hinge assembly includes a bracket **140** rotatably coupled to a housing **142**. The housing **142** may include a first flange **144** that may be fastened to an internal frame in the base **104**, as illustrated in FIG. **7**A. The first flange **144** may include holes **146** to allow the first flange to be fastened to the base **104** using fasteners, such as, for example, screws, rivets or bolts. The bracket **140** may include a second flange **148** that may be similarly coupled to the display component **102** using fasteners **150**. In one embodiment, the display screen **110** (see FIG. **1**) may be an LCD screen. As known to those skilled in the art, an LCD screen generally comprises a frame and plastic housing. In one example, the second flange **148** may be fastened to either or both of the display screen frame and the screen's plastic housing. Referring to FIG. **25**, there is illustrated an example of two hinge assemblies **138** coupled to the display frame **208** of the display component, and to the base frame **210** of the base component **104**. According to one embodiment, the bracket **140** and/or housing **142** may be formed of cast zinc. However, it is to be appreciated that other materials, including other metals, may be used, and the bracket **140** and/or housing **142** may be formed using a procedure other than casting, such as, for example, machining or molding.

Referring again to FIG. **8**, in one embodiment, the hinge assembly **138** may also incorporate an area **152** for locating the power button (FIG. **2**, **122**) or a navigation control button (FIG. **4**, **166**), as discussed further below.

Referring to FIG. **9**, there is illustrated a cross-sectional view of a portion of the hinge assembly **138** taken along line A-A in FIG. **8**. As shown in FIG. **9**, in one embodiment the hinge assembly **138** comprises a shaft **154** located within the hinge housing **142**. The shaft **154** may be held in position within the hinge housing **142**, and rotatably coupled to the housing, by torsion elements, such as springs **156**. In one example, the springs **156** may be formed by stamping; however, it is to be appreciated that other methods of manufacture may be used. In one example, the hinge assembly may accommodate about 320 degrees of rotation, as discussed above, and may provide about 6.5 in-lbs in symmetric torque.

FIG. **10** is an exploded view of the hinge assembly of FIGS. **8** and **9**. As shown in FIG. **10**, the shaft **154** is coupled to a member **158**. This member **158** may be integral with or coupled to the bracket **140** which is, in turn, fastened to the display component, as discussed above. Thus, the shaft **154** and springs **156** provide a rotatable coupling between the fixed elements of the hinge assembly, namely, the hinge housing **142** and bracket **140** which are fastened to the base **104** and display component **102** of the portable computer. In this manner, the hinge assembly allows the display component **102** to be moved relative to the base **104**, thereby allowing the portable computer to be easily and quickly configured into any of the closed position, laptop mode or easel mode. For example, simply rotating or tilting the display component about the longitudinal axis **101** (see FIG. **1**) up to approximately 180 degrees from the closed mode configures the portable computer into the laptop mode, and rotating the display component about the longitudinal axis **101** beyond approximately 180 degrees axis from the closed mode configures the portable computer into the easel mode.

According to one embodiment, the portable computer may include integrated "navigation" hardware that allows a user to easily and comfortable control various features and functions of the portable computer, and to manipulate content displayed on the portable computer. For example, as discussed above, the portable computer **100** may comprise a scroll wheel **132** that allows a user to control, adjust and/or select various functionality of the portable computer. According to another embodiment, the scroll wheel **132** may be used to provide "hardware navigation" through information, such as menus, icons, etc., displayed on the display screen **110**, as discussed further below with reference to FIG. **17**. A common display configuration used in conventional computers is a "desktop" view in which multiple icons representing links to various

programs or applications are displayed over a background image. Navigation is conventionally performed using a mouse, touch pad or trackball, as known to those skilled in the art. In one embodiment, the portable computer **100** may display information on the display screen **110** in the conventional desktop configuration, and navigation may be performed using either conventional tools, such as a touchpad **108**, trackball (not shown) or peripheral, for example, a mouse, that is connected to the portable computer **100** via a port **164**, or the scroll wheel **132**, or a combination thereof. According to another embodiment, the portable computer **100** includes a streamlined graphical user interface that supports "map" navigation. The map user interface provides a clear overview of the entire computing environment and searching capability within the environment that may be accessed using the scroll wheel **132** and, optionally, one or navigation buttons **166**, **168** that may be provided on the base **104** of the portable computer **100** (button **166**) and/or in the keyboard **106** (button **168**), illustrated in FIG. **17**. In one embodiment, the map mode of navigation is a hierarchical mode that reduces the number of items to select amongst at any stage of navigation, thereby facilitating user access with the scroll wheel **132** and, optionally, the navigation button(s) **166**, **168**. Of course, it is to be appreciated that the map user interface may also be navigated using conventional tools, such as a trackball, touchpad, mouse or arrow keys.

Referring to FIG. **11**, there is illustrated a block diagram of one example of an architecture of the portable computer including a map user interface. The user interface "home" screen **170** that displays a plurality of modes of content **172**. In the illustrated example, the home screen **170** contains five modes of content **172**; however, it is to be appreciated that the home screen may include more or fewer than five modes of content and that the modes of content may differ from the examples discussed below. According to one example, the modes of content **172** accessible via the home screen **170** may include "media" **172***a*, "connect" **172***b*, "web" **172***c*, "applications" **172***d*, and "channels" **172***e*. Using the map user interface, information, programs, features and applications may be grouped into the various modes of content **172**. By selecting any mode of content **172**, for example, by using the scroll wheel **132** and/or navigation buttons **166**, **168**, as discussed further below, the user may access the content organized within that mode. For example, the media mode **172***a* may provide access to a medial player to play, view, search and organize media such as music, video, photos, etc. The connect mode **172***b* may provide access to features such as, for example, email, voice-over-IP, instant messaging, etc., and the web mode **172***c* may provide access to internet browsing and searching. The application mode **172***d* may provide access to, for example, computer applications or programs, such as word processor, spreadsheet, calculator, etc. In one example, these applications or programs may be provided as web-based services rather than programs or applications residing on the portable computer **100**. The channels mode **172***e* may provide access to different functionality of the portable computer, with the different functions or features defined as different channels. For example, a channel may include an alarm clock channel in which the portable computer is configured to display a clock and can be programmed to activate an alarm, e.g., a sound, piece of music, etc., at a predetermined time. Another example of a channel may include a "photo frame" channel in which the portable computer may be configured to display a pre-selected image or set of images, etc. Another example of a channel is a "television" channel, in which the portable computer is configured to stream Internet television. In one example, a user may configure particular Internet television channels (e.g., a news channel, a movie channel, a home and garden channel, etc.) into sub-channels within the channels mode of content **172**(*e*). Some or all of the modes of content **172** may access, retrieve and/or store information on the Internet **174**.

According to one embodiment, the different modes of content **172** may be displayed as a series of bars across the display screen **110**, as illustrated in FIG. **12**. The following discussion of various features, including hardware navigation through the map user interface may refer primarily to the display configuration illustrated in FIG. **12**. However, it is to be appreciated that the invention is not so limited, and the modes of content may be displayed in other configurations, including, for example, a "desktop" and icon configuration, a "dashboard" type display, as illustrated in FIG. **13**, or another configuration, as would be recognized by those skilled in the art. Similarly, navigation is discussed below primarily with reference to the scroll wheel **132** and navigation buttons **166**, **168**; however, it is to be appreciation that navigation may also be accomplished using any of the conventional tools discussed above or known to those skilled in the art.

As discussed above, according to one embodiment, the scroll wheel **132** and, optionally, the navigation buttons **166**, **168** may be used to navigate the user interface. Referring again to FIG. **12**, scrolling the scroll wheel may sequentially highlight different ones of the modes of content **172**. In one example, the highlighting may be achieved by changing the color of the selected mode, and/or by providing a visual indicator, such as a colored bar **176**. A highlighted mode **172** may be selected by pressing the scroll wheel, thereby bringing up a new "page" or screen on the user interface corresponding to the selected mode. Once within a selected mode of content **172**, the scroll wheel may similarly be used to select particular functions, features or applications within that mode. In one embodiment, the default action for the scroll wheel **132** may vary depending on whether the portable computer **100** is in the laptop mode or the easel mode. For example, in easel mode, the default action for the scroll wheel may be channel selection within the channels mode **172**(*e*).

As discussed above, in one embodiment volume control for the speakers **128** may be provided by the volume control button **204** and mute button **206**. Alternatively, according to another embodiment, volume control may be provided using the scroll wheel **132**. Thus, as a user scrolls the scroll wheel **132**, as illustrated in FIG. **14** by arrow **161**, a volume indicator may appear on the display screen **110**. In one example, the volume indicator may comprise a transparent, or partially transparent, box **162** containing volume level indicators that may appear directly below the scroll wheel **132** on the display screen **110**. In this example, as the user scrolls the scroll wheel **132**, different volume levels in the volume box **162** may be successively highlighted, to indicate to the user that the volume is increasing or decreasing.

In one embodiment, the scroll wheel **132** may be depressible as well as scrollable. Thus, pressing the scroll wheel **132**, as illustrated in FIG. **15**, may allow further control, such as, for example, selecting a channel onto which the user has scrolled, or "play" and "pause" of audio or video being played through the portable computer **100**.

As discussed above, according to one embodiment, one or more navigation buttons may be used in conjunction with the scroll wheel. In particular, in one embodiment, the navigation button(s) may be used to change the action of the scroll wheel. As discussed above, in one example, the default action of the scroll wheel is volume control. This action may be changed by pressing the navigation button **166**, as illustrated in FIG. **16**, for example, from volume control to menu navigation in

the user interface, and vice versa. According to one embodiment, the effect of pressing the navigation button **166** may vary depending on active the mode of content of the portable computer **100**. For example, if a user is in the media mode using a photo viewing application, pressing the navigation button **166** may change the action of the scroll wheel **132** from mode navigation to slideshow controls for the photos. When the navigation button **166** is pressed, an control indicator box (similar to the volume indicator box **162** discussed above with reference to FIG. **14**) may appear containing different actions for the photo slideshow, such as "play," "next," "back," "skip," "full screen view," etc., and scrolling the scroll wheel **132** may allow a user to select one of these actions. Pressing the navigation button **166** again may return the scroll wheel action to menu navigation, to allow the user to, for example, move to a different feature or application within the active mode, or to select a different mode.

As can be seen in FIG. **16**, the navigation button **166** may be easily accessed when the portable computer **100** is in the easel mode, providing a convenient navigation tool for this configuration. A similar navigation button **168** may be provided on the keyboard **106**, as illustrated in FIG. **17**. In one example, the functionality of the two navigation buttons **166**, **168** may be the same, with the different locations providing easy, comfortable access in the different configuration modes (i.e., laptop or easel) of the portable computer **100**. Thus, a user may use either navigation button **166** or navigation button **168**, depending on personal preference. In another example, the two navigation buttons may have different functionality. For example, the navigation button **166** may be used to alter the action of the scroll wheel **132**, as discussed above, while the navigation button **168** is used to navigate "up" or "down" a level within the map user interface. For example, pressing the navigation button **168** while within a given mode of content may allow the user to "back up" to the home screen; or pressing the navigation button **168** while within a selected channel (in the channel mode of the content **172***e*) may allow the user to "back-up" to the channel mode main page.

It is to be appreciated that numerous variations on the functionality of the navigation buttons **166**, **168** is possible, as would be recognized by those skilled in the art, and the above examples are given for illustration only and are not intended to be limiting. In addition, any functions described with reference to one navigation button (**166** or **168**) may be instead (or additionally) implemented with the other navigation button. In one example, the function of the navigation buttons **166**, **168** may vary depending on whether the portable computer **100** is configured into the laptop mode or the easel mode. For example, only the navigation button **166** may be active in the easel mode, and only the navigation button **168** may be active in the laptop mode. Alternatively, both navigation buttons **166**, **168** may be usable in either the laptop mode or the easel mode, but their functionality may vary. For example, when the portable computer **100** is in the easel mode, the default action for the navigation button **166** may be channel selection whereas the default action for the navigation button **168** is to access the "home" screen. Furthermore, the portable computer **100** is not limited to the use of two navigation buttons and may instead comprise only a single navigation button or more than two navigation buttons, any of which may be disposed in the locations described above (e.g., on the rounded portion **120** of the base **104** or on the keyboard **106**), or in other locations on the portable computer.

As discussed above, according to one embodiment, the function or display content and/or display orientation of the portable computer may vary when the portable computer is configured from the laptop mode into the easel mode, or vice versa. For example, as discussed above, when the portable computer **100** is configured into the easel mode, the visual display on the display screen **110** is automatically rotated 180 degrees such that the information appears "right-way-up," even through the display screen is upside-down compared to when the portable computer is in the laptop mode. In another example, for at least some activities within at least some modes of content (e.g., viewing a photograph or video), when the portable computer **100** is configured into the easel mode, the display may automatically adjust to "full screen view" (i.e., the displayed image or video is displayed on the full screen size, rather than in a window) to allow for comfortable viewing.

In addition, as discussed above, the ability to configure the portable computer **100** into either the laptop mode or the easel mode provides enhanced functionality. For example, when the portable computer **100** is not being actively used, the user may configure the portable computer into the easel mode, and program the portable computer to act as a digital photo frame, displaying one or more photos of the user's choice. In the easel mode, the portable computer **100** may occupy a smaller footprint on a surface than in the laptop or closed modes because the base **104** and display component **102** are upright, as illustrated in FIGS. **4** and **5**. In addition, because the portable computer can act as a passive information and/or entertainment device, such as a photo frame or clock, as discussed above, the portable computer may provide a useful function even when not being actively used by the user, and may do so (in the easel mode) without taking up much surface area.

According to another embodiment, the portable computer **100** may further comprise a wireless signal indicator **178**, as illustrated in FIG. **18**. The wireless signal indicator **178** may indicate the availability and/or strength of a wireless signal to which the portable computer **100** is connected, or is attempting to connect to. In one example, the color of the wireless signal indicator **178** may provide information regarding the strength of a detected wireless signal. For example, green may indicate a "good" signal; yellow may indicate a "poor" or "low" signal; and red may indicate that there is no signal available. In one example, the wireless signal indicator **178** may be ON or active whenever the portable computer **100** is powered up. Alternatively, the wireless signal indicator **178** may be activated by a user action, for example, by pressing the navigation button **166** or another button or key provided on the portable computer **100**, and may remain active for a predetermined time period (e.g., for 2 seconds, 10 seconds, one minute, etc.). As discussed above, the functionality of the navigation button **166** may vary depending on the configuration mode of the portable computer **100**. In one example, when the portable computer **100** is in the closed position, but still powered up, the default action for the navigation button **166** may be to activate the wireless signal indicator **178**.

According to one embodiment, the portable computer **100** may be provided with power cord and adapter to allow the portable computer to be plugged into a wall supply. Referring to FIG. **19**, there is illustrated a view of a portion of the portable computer **100**, showing a power jack **180** to which the power adaptor can be connected. As discussed above, the portable computer **100** may also include a port **164** to which peripheral devices, such as mouse, external keyboard, portable flash drive, memory stick, etc. may be connected. In one example, the port **164** is a USB port; however, it is to be appreciated that the port may accommodate protocols other than USB. In addition, although only one port **164** is illustrated in FIG. **19**, the portable computer **100** may comprise multiple ports that may accommodate multiple protocols. In one example, the portable computer **100** may also comprise a

headphone jack **182**. It is to be appreciated that the location of any or all of the power jack **180**, port(s) **164**, and headphone jack **182** are not limited to the example shown in FIG. **19**, but may be anywhere convenient or desirable on the portable computer **100**.

Referring to FIG. **20**, there is illustrated a top down view one example of a power adaptor **184** that may be used with the portable computer **100** and connected via the power jack **180**. As known to those skilled in the art, the power adaptor **184** comprises a transformer (not shown) that converts the wall power to a level acceptable for use by the portable computer **100**. In one embodiment, the power adaptor **184** comprises a substantially round body **186** that houses the transformer and other necessary components. A connector **188** may allow the power adaptor **184** to be connected to a wall outlet or extension cord. In one example, the connector **188** may include foldable prongs **190** that can be folded against the connector **188** for storage, and folded out for connection, as illustrated in FIG. **21**. A cord **192** may be slidably accommodated within the body **186**, such that the cord may be stored within the body and flexibly extended (up to its maximum length) by a user.

According to one embodiment, the cord **192** may be wound around a cord spool **194** located within, or partially within, the body **186** of the power adaptor **184**. As illustrated in FIG. **21**, the cord spool **194** may be configured to slide out from the body **186** of the power adaptor **184**, such that the cord **192** can be wound around the cord spool **194**, as illustrated in FIGS. **22**A and **22**B.

According to another embodiment, the portable computer **100** may be configured to connect to a docking station **196**, as illustrated in FIG. **23**. In one embodiment, a connector **198** on the docking station **196** may be configured to slidably connect to connectors **200** on the portable computer **100**, as illustrated in FIG. **23**. In one example, the connectors **200** may include power and audio connectors, such that the portable computer **100** may receive power from the docking station and receive and/or provide audio signals from/to the docking station, respectively. For example, the docking station may be coupled to external speakers, and the portable computer may provide audio signals to the docking station to be played through the external speakers. In another example, the docking station **196** may also be coupled to an audio device (not shown), such as an MP3 player, which may provide audio signals and data to the portable computer **100**, for example, to update an audio library on the portable computer. It is to be appreciated that many other variations of communication between the portable computer **100** and devices coupled to the docking station **196** are possible, as would be recognized by those skilled in the art, and such variations are intended to be within the scope of this disclosure. Furthermore, numerous variations on the connector(s) **198**, **200** that couple the docking station **196** to the portable computer **100** are also possible, as would be recognized by those skilled in the art. For example, the portable computer **100** may include a multi-pin connector **202** located on the base **104**, as illustrated in FIG. **24**. Such and other variations are intended to be within the scope of this disclosure and the above-mentioned examples are provided for illustration only and are not intended to be limiting.

In addition, it is to be appreciated that although the above discussion refers primarily to the portable computer **100** being in either the laptop mode or easel mode, other modes or configurations are also possible. For example, as discussed above, because the portable computer **100** can be configured from the closed position, through the laptop mode into the easel mode by rotating the display component **102**, a number of configurations are possible in between "true" laptop mode and "true" easel mode. In another example, the portable computer **100** may be configured into a "frame" mode, as illustrated in FIG. **26**, in which the portable computer is placed on a surface **212** with the keyboard **106** "face down" on the surface **212** and the display **110** facing upward. In the frame mode, the display component **102** may be at a similar orientation, and angle **134**, with respect to the base component **104** as in the easel mode. However, rather than the base component **104** and display component **102** being oriented vertically with respect to the surface **212**, as in the easel mode (in which the portable computer forms an inverted "V" as discussed above), in the frame mode, the base component **104** may lie flat on the surface **212**, as shown in FIG. **26**. In one example, software and/or hardware protection may be provided for the keyboard to prevent keys from being pressed (or to prevent the portable computer from responding to pressed keys) when the portable computer is in the frame mode.

Similarly, referring to FIG. **27**, there is illustrated another configuration of the portable computer **100**, referring to as the "flat" mode. In the flat mode, the display component **102** may be rotated (or opened) to approximately 180 degrees with respect to the base component **104**, such that the base component and display component lay flat on a surface, with the keyboard **106** and display screen **110** exposed, as shown in FIG. **27**. Unlike the easel and frame modes, in which the keyboard may be concealed and not easily accessible, in the flat mode, the keyboard is accessible and usable. In addition, as discussed above, the visual display on the display screen **110** may be automatically rotated to accommodate comfortable viewing of information by persons located in different positions relative to the base component **104** or display component **102**. The visual display on the display screen **110** may also be manually adjusted by a user using, for example, the keyboard **106**, touch pad **108** or mouse (not shown), scroll wheel **132** or navigation buttons (not shown). For example, if a user (located at position A) wishes to display information for a person located opposite the user (at position B), the visual display may be rotated (automatically or manually) 180 degrees such that the information appears "right-way-up," to the person at location B, even through the display screen **110** is upside-down for that person. Similarly, in another example, the visual display may be rotated (automatically or manually) 90 degrees such that the information appears "right-way-up," for a person at location C. In one example, a user can "toggle" the visual display among various orientations. For example, a user at location A may have the visual display facing themselves while using the keyboard **106** or other controls to change or access information on the display, then toggle the display orientation 180 or 90 degrees to display the information for persons at locations B or C.

In summary, various aspects and embodiments provide a portable computer that is configurable between different operating modes, including a laptop mode and an easel mode, and that is capable of different display formats and functionality in the different modes. The ability to view and operate the portable computer in the different laptop and easel modes, and to incorporate features and functions such as an alarm clock, digital photograph frame, voice-over-IP, etc, may provide enhanced flexibility and usefulness. In addition, the portable computer may include a graphical user interface that may work seamlessly with the computer hardware to provide an enjoyable, holistic user experience.

Having thus described several aspects of at least one embodiment, it is to be appreciated various alterations, modifications, and improvements will readily occur to those skilled in the art. For example functionality or features that have been described herein in connection with hardware may

instead be implemented in software, or vice versa. For example, the wireless signal indicator discussed above may instead (or in addition) be provided as a software application. Such alterations, modifications, and improvements are intended to be part of this disclosure and are intended to be within the scope of the invention. Accordingly, the foregoing description and drawings are by way of example only.

What is claimed is:

1. A portable computer configurable between a plurality of display modes including a laptop mode and an easel mode wherein transitions between the plurality of display modes allows an operator to interact with a single display screen in each of the plurality of display modes, the portable computer comprising:

a base including a keyboard;

a main display component rotatably coupled to the base such that the main display component and the base are rotatable with respect to one another about a longitudinal axis running along an interface between the main display component and the base to transition between at least the laptop mode and the easel mode, the main display component including the single display screen, wherein the transition between the laptop mode and the easel mode allows the operator to operate the portable computer while viewing the single display screen in each of the plurality of display modes, wherein

the laptop mode is configured to display to a user on the main display component a first content mode having a first content display orientation with the main display component oriented towards the user and the keyboard oriented to receive input from the user;

the easel mode is configured to display to the user on the main display component a second content mode having a second content display orientation with the main display component oriented towards the user and the keyboard oriented away from the user, wherein the first and second content display orientations are 180 degrees relative to each other, and wherein the portable computer is operable in the easel mode to enable the user to interact with displayed content without interacting with the keyboard; and

a navigation control disposed at least partially within the base and rotatable about the longitudinal axis, the navigation control configured to permit a user to control at least one of operating parameters of the portable computer and content displayed on the single display screen wherein the plurality of modes includes a frame in which the main display component is oriented towards the operator, the base contacts a substantially horizontal surface, and the keyboard faces the substantially horizontal surface.

2. The portable computer of claim **1**, where the navigation control includes a scroll wheel configured to permit the user to adjust a volume of sound produced by the portable computer.

3. The portable computer of claim **1**, further comprising a first navigation button disposed on one of the base and the display component and configured to permit the user to manipulate selected content displayed on the screen.

4. The portable computer of claim **3**, wherein the screen is configured to display at least one of a plurality of modes of content; and

wherein the navigation button is configured to permit the user to select for display one of the plurality of modes of content.

5. The portable computer of claim **3**, further comprising a second navigation button;

wherein the first navigation button is disposed on a major surface of the base; and

wherein the second navigation button is disposed on a minor surface of the base.

6. The portable computer of claim **1**, wherein the navigation control includes a scroll wheel configured to permit the user to select a mode of content for display by the portable computer.

7. The portable computer of claim **1**, wherein rotating either the display component or the base about the longitudinal axis up to approximately 180 degrees from a closed mode in which the display screen is disposed substantially against the base configures the portable computer into the laptop mode; and

wherein rotating either the display component or the base about the longitudinal axis beyond approximately 180 degrees from the closed mode configures the portable computer into the easel mode.

8. The portable computer of claim **1**, wherein the frame mode is configured to display to a user on the main display component the first content mode having the first content display orientation.

9. The portable computer of claim **1**, wherein the portable computer is configured to prevent the portable computer from responding to keyboard input when the portable computer is in the frame mode.

10. A portable computer configurable between a plurality of display modes including a laptop mode and an easel mode wherein transitions between the plurality of display modes permit an operator to interact with a single display screen in each of the plurality of display modes, the portable computer comprising:

a base including a keyboard;

a main display component rotatably coupled to the base and including the single display screen which displays content;

a hinge assembly disposed at least partially within the base and the main display component that defines an axis of rotation about which both the base and the main display component are rotatable to transition the portable computer between at least the laptop mode and the easel mode, wherein the transition between the laptop mode and the easel mode allows the operator to operate the portable computer while viewing the single display screen in each of the plurality of display modes, wherein

the laptop mode is configured to display to a user on the main display component a first content mode having a first content display orientation with the main display component oriented towards the user and the keyboard oriented to receive input from the user;

the easel mode is configured to display to the user on the main display component a second content mode having a second content display orientation with the main display component oriented towards the user and the keyboard oriented away from the user, wherein the first and second content display orientations are 180 degrees relative to each other, and wherein the portable computer is operable in the easel mode to enable the user to interact with displayed content without interacting with the keyboard; and

a navigation control accessible in each of the plurality of display modes and configured to permit a user to manipulate at least one of operating parameters of the portable computer and the content displayed on the single display screen wherein the plurality of modes includes a frame mode in which the main display component is oriented towards the operator, the base con-

tacts a substantially horizontal surface, and the keyboard faces the substantially horizontal surface.

11. The portable computer of claim **10**, wherein the navigation control includes a scroll wheel disposed at least partially about the axis of rotation of the display component relative to the base.

12. The portable computer of claim **11**, wherein the scroll wheel provides a default action which effects manipulation of the at least one of the operating parameters of the portable computer, wherein the default action is defined differently responsive to a display mode of the portable computer.

13. The portable computer of claim **10**, further comprising a first navigation button user-accessible in each of the laptop mode and the easel mode, and configured to permit the user to manipulate selected content displayed on the screen.

14. The portable computer of claim **13**, wherein the screen is configured to display at least one of a plurality of modes of content; and

wherein the first navigation button is configured to permit the user to select for display one of the plurality of modes of content.

15. The portable computer of claim **13**, further comprising a second navigation button that is not user-accessible when the portable computer is in the easel mode.

16. The portable computer of claim **10**, wherein an operating display mode is selected from the plurality of display modes based on a physical orientation of the portable computer.

17. The portable computer of claim **10**, wherein an operating display mode is selected from the plurality of display modes in response to operation of the navigation control.

18. A portable computer configurable between a plurality of display modes including a laptop mode and an easel mode wherein transitions between the plurality of display modes allow an operator to interact with a single display screen in each of the plurality of display modes, the portable computer comprising:

a base including a keyboard;

a main display component including the single display screen configured to display content;

a hinge assembly disposed at least partially within the base configured to rotatably couple the main display component to the base, the hinge assembly defining a longitudinal axis running along an interface between the display component and the base about which the display component and the base are rotatable to transition the portable computer between at least the laptop mode and the easel mode, wherein the transition between the laptop mode and the easel mode allows the operator to operate the portable computer while viewing the single display screen in each of the plurality of display modes, wherein

the laptop mode is configured to display to a user on the main display component a first content mode having a first content display orientation with the main display component oriented towards the user and the keyboard oriented to receive input from the user;

the easel mode is configured to display to the user on the main display component a second content mode having a second content display orientation with the main display component oriented towards the user and the keyboard oriented away from the user, wherein the first and second content display orientations are 180 degrees relative to each other, and wherein the portable computer is operable in the easel mode to enable the user to interact with displayed content without interacting with the keyboard; and

a navigation control disposed at least partially about the longitudinal axis wherein the plurality of modes includes a frame mode in which the main display component is oriented towards the operator, the base contacts a substantially horizontal surface, and the keyboard faces the substantially horizontal surface.

19. The portable computer of claim **18**, wherein the navigation control includes a scroll wheel configured to permit a user to manipulate the content displayed on the screen.

20. The portable computer of claim **18**, wherein the navigation control includes a scroll wheel configured to permit a user to control a volume of sound played by the portable computer.

21. The portable computer of claim **18**, wherein the navigation control includes a scroll wheel disposed at least partially within the hinge assembly.

22. The portable computer of claim **18**, further comprising at least one navigation button disposed on one of the base and the display component.

* * * * *

UNITED STATES PATENT AND TRADEMARK OFFICE

CERTIFICATE OF CORRECTION

PATENT NO. : 8,624,844 B2
APPLICATION NO. : 12/170951
DATED : January 7, 2014
INVENTOR(S) : Yves Behar et al.

It is certified that error appears in the above-identified patent and that said Letters Patent is hereby corrected as shown below:

In the Claims:

Column 17, Claim 1, Line 47, insert -- mode -- after the word “frame”.

Signed and Sealed this
First Day of April, 2014

Michelle K. Lee

Michelle K. Lee
Deputy Director of the United States Patent and Trademark Office

US008624844C1

(12) EX PARTE REEXAMINATION CERTIFICATE (12281st)

United States Patent

Behar et al.

(10) Number: US 8,624,844 C1

(45) Certificate Issued: *Apr. 27, 2023

(54) **PORTABLE COMPUTER WITH MULTIPLE DISPLAY CONFIGURATIONS**

(75) Inventors: **Yves Behar**, Oakland, CA (US); **Joshua Morenstein**, San Francisco, CA (US); **Christopher Hibmacronan**, Oakland, CA (US); **Naoya Edahiro**, San Francisco, CA (US); **Matthew David Day**, San Francisco, CA (US)

(73) Assignee: **LITL LLC**, Boston, MA (US)

Reexamination Request:
No. 90/014,965, Feb. 25, 2022

Reexamination Certificate for:

Patent No.:	**8,624,844**
Issued:	**Jan. 7, 2014**
Appl. No.:	**12/170,951**
Filed:	**Jul. 10, 2008**

Certificate of Correction issued Apr. 1, 2014

(*) Notice: This patent is subject to a terminal disclaimer.

Related U.S. Application Data

(60) Provisional application No. 61/041,365, filed on Apr. 1, 2008.

(51) **Int. Cl.**

G06F 3/02	(2006.01)
G06F 1/16	(2006.01)
G06F 3/0481	(2022.01)
G06F 3/04812	(2022.01)
G06F 3/0482	(2013.01)

(52) **U.S. Cl.**
CPC ***G06F 1/1616*** (2013.01); ***G06F 1/1601*** (2013.01); ***G06F 1/162*** (2013.01); ***G06F 1/169*** (2013.01); ***G06F 1/1613*** (2013.01); ***G06F 1/1618*** (2013.01); ***G06F 1/1637*** (2013.01); ***G06F 1/1662*** (2013.01); ***G06F 1/1677*** (2013.01); ***G06F 1/1681*** (2013.01); ***G06F 3/0481*** (2013.01); ***G06F 3/0482*** (2013.01); ***G06F 3/04812*** (2013.01); *G06F 2200/1614* (2013.01)

(58) **Field of Classification Search**
None
See application file for complete search history.

(56) **References Cited**

To view the complete listing of prior art documents cited during the proceeding for Reexamination Control Number 90/014,965, please refer to the USPTO's Patent Electronic System.

Primary Examiner — Christina Y. Leung

(57) **ABSTRACT**

A portable computer that is configurable between a laptop mode (in which the portable computer has a conventional laptop appearance) and an easel mode in which the base of the computer and its display component stand vertically forming an inverted "V." The portable computer includes a hinge assembly that couples the display component to the base of the computer, and allows the display component to be rotated about an axis along an interface between the display component and the base to configure the portable computer between a closed position, the laptop mode and the easel mode. The portable computer further comprises a scroll wheel and optional navigation buttons.

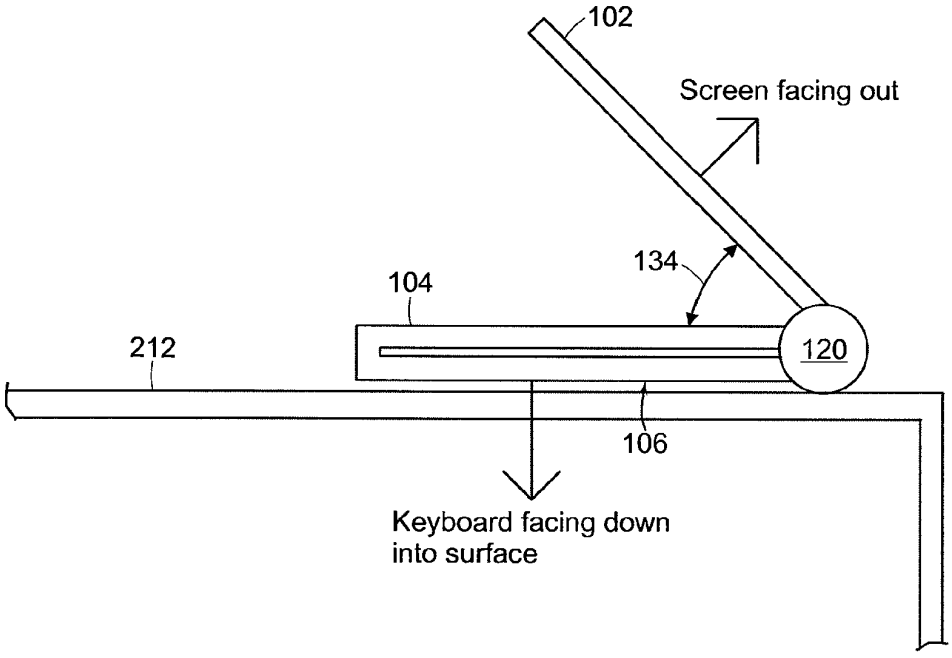

EX PARTE REEXAMINATION CERTIFICATE

NO AMENDMENTS HAVE BEEN MADE TO THE PATENT

AS A RESULT OF REEXAMINATION, IT HAS BEEN DETERMINED THAT:

The patentability of claims **10** and **16** is confirmed.

Claims **1-9**, **11-15** and **17-22** were not reexamined.

* * * * *

EXHIBIT C

US009563229B2

(12) **United States Patent**
Behar et al.

(10) **Patent No.: US 9,563,229 B2**
(45) **Date of Patent: Feb. 7, 2017**

(54) **PORTABLE COMPUTER WITH MULTIPLE DISPLAY CONFIGURATIONS**

(71) Applicant: **LITL LLC**, Boston, MA (US)

(72) Inventors: **Yves Behar**, Oakland, CA (US); **Joshua Morenstein**, San Francisco, CA (US); **Christopher Hibmacronan**, Oakland, CA (US); **Naoya Edahiro**, San Francisco, CA (US); **Matthew David Day**, San Francisco, CA (US)

(73) Assignee: **LiTL LLC**, Boston, MA (US)

(*) Notice: Subject to any disclaimer, the term of this patent is extended or adjusted under 35 U.S.C. 154(b) by 187 days.

(21) Appl. No.: **13/651,636**

(22) Filed: **Oct. 15, 2012**

(65) **Prior Publication Data**

US 2013/0141854 A1 Jun. 6, 2013

Related U.S. Application Data

(63) Continuation of application No. 12/170,939, filed on Jul. 10, 2008, now Pat. No. 8,289,688, and a (Continued)

(51) **Int. Cl.**
G06F 1/16 (2006.01)
G06F 3/0481 (2013.01)

(52) **U.S. Cl.**
CPC ***G06F 1/1601*** (2013.01); ***G06F 1/162*** (2013.01); ***G06F 1/169*** (2013.01); ***G06F 1/1613*** (2013.01);
(Continued)

(58) **Field of Classification Search**
CPC G06F 1/1677; G06F 1/162
See application file for complete search history.

(56) **References Cited**

U.S. PATENT DOCUMENTS

3,468,576 A 9/1969 Beyer et al.
4,939,514 A 7/1990 Miyazaki
(Continued)

FOREIGN PATENT DOCUMENTS

CN 1292112 A 4/2001
DE 19952486 A1 5/2001
(Continued)

OTHER PUBLICATIONS

Final Rejection CN-OA—dated Jul. 18, 2013—Appl No. 200980117859.8—filed Mar. 27, 2009.
(Continued)

Primary Examiner — Adrian S Wilson
(74) *Attorney, Agent, or Firm* — Wolf, Greenfield & Sacks, P.C.

(57) **ABSTRACT**

A portable computer that is configurable between a plurality of display modes including a laptop mode (in which the portable computer has a conventional laptop appearance) and an easel mode in which the base of the computer and its display component stand vertically forming an inverted "V." The portable computer includes a hinge assembly that couples the display component to the base of the computer, and allows the display component to be rotated about an axis along an interface between the display component and the base to configure the portable computer between a closed position, the laptop mode and the easel mode. The portable computer further comprises a scroll wheel and optional navigation buttons that permit a user to control or manipulate various aspects of operation of the portable computer (such as volume or display brightness) and/or content displayed the computer.

25 Claims, 25 Drawing Sheets

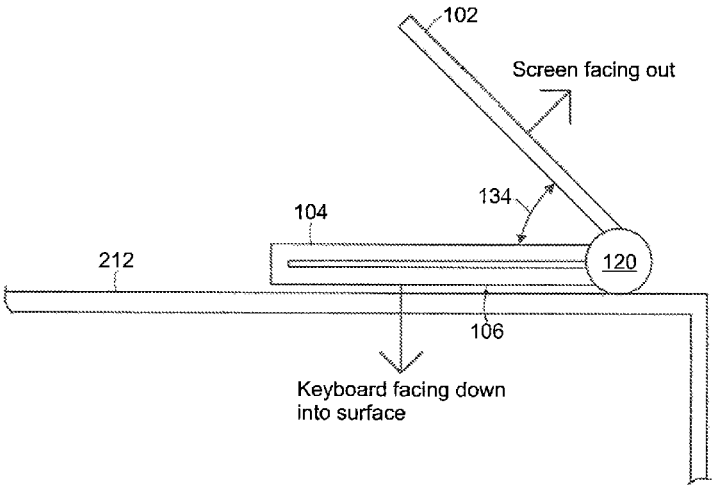

Related U.S. Application Data

continuation of application No. 12/170,951, filed on Jul. 10, 2008, now Pat. No. 8,624,844.

(60) Provisional application No. 61/041,365, filed on Apr. 1, 2008.

(52) **U.S. Cl.**
CPC ***G06F 1/1677*** (2013.01); ***G06F 3/0481*** (2013.01); ***G06F 3/04812*** (2013.01); *G06F 2200/1614* (2013.01)

(56) **References Cited**

U.S. PATENT DOCUMENTS

D333,636 S 3/1993 Issa
5,200,913 A 4/1993 Hawkins et al.
5,268,817 A 12/1993 Miyagawa et al.
5,436,954 A 7/1995 Nishiyama et al.
5,515,345 A 5/1996 Barreira et al.
5,547,698 A 8/1996 Lansbergen et al.
5,661,632 A * 8/1997 Register G06F 1/1626 345/905
5,708,561 A * 1/1998 Huilgol G06F 1/1616 361/679.07
5,712,760 A 1/1998 Coulon et al.
D391,927 S 3/1998 Faranda et al.
D392,944 S 3/1998 Issa
D395,868 S 7/1998 Iino
5,790,371 A 8/1998 Latocha et al.
5,793,355 A 8/1998 Youens
5,796,575 A 8/1998 Podwalny et al.
D399,526 S 10/1998 Brady
5,825,352 A 10/1998 Bisset et al.
5,841,631 A 11/1998 Shin et al.
5,847,698 A 12/1998 Reavey et al.
5,900,848 A 5/1999 Haneda et al.
5,926,364 A 7/1999 Karidis
5,949,643 A 9/1999 Batio
D416,003 S 11/1999 Schiefer et al.
5,987,704 A 11/1999 Tang
6,005,767 A 12/1999 Ku et al.
6,067,224 A 5/2000 Nobuchi
6,094,191 A * 7/2000 Watanabe et al. 345/168
6,097,389 A 8/2000 Morris et al.
6,137,468 A * 10/2000 Martinez G06F 1/1616 345/649
6,144,358 A 11/2000 Narayanaswamy et al.
6,154,359 A 11/2000 Kamikakai et al.
6,222,507 B1 4/2001 Gouko
6,223,393 B1 5/2001 Knopf
6,262,885 B1 7/2001 Emma et al.
6,266,236 B1 7/2001 Ku et al.
6,275,376 B1 8/2001 Moon
6,295,038 B1 9/2001 Rebeske
6,302,612 B1 10/2001 Fowler et al.
6,323,846 B1 11/2001 Westerman et al.
D452,238 S 12/2001 Sugano et al.
6,327,482 B1 12/2001 Miyashita
6,341,061 B1 1/2002 Eisbach et al.
6,343,006 B1 1/2002 Moscovitch et al.
6,377,444 B1 4/2002 Price et al.
D462,069 S 8/2002 Gatto
6,437,974 B1 8/2002 Liu
D463,797 S 10/2002 Andre et al.
6,464,195 B1 10/2002 Hildebrandt
6,492,974 B1 * 12/2002 Nobuchi G06F 1/1618 345/156
6,493,216 B1 12/2002 Lin
6,510,049 B2 1/2003 Rosen
D476,326 S 6/2003 Tanimura
6,597,384 B1 * 7/2003 Harrison G06F 1/1626 345/169
D479,708 S 9/2003 Hwang et al.
6,628,267 B2 9/2003 Karidis et al.
6,642,909 B1 11/2003 Oliva
6,659,516 B2 12/2003 Wang et al.
6,661,426 B1 12/2003 Jetha et al.
6,665,175 B1 12/2003 deBoer et al.
6,693,652 B1 2/2004 Barrus et al.
6,697,055 B1 2/2004 Bullister
D491,177 S 6/2004 Andre et al.
D491,936 S 6/2004 Jao
D494,162 S 8/2004 Kondo
6,771,494 B2 8/2004 Shimano
D495,674 S 9/2004 Yoo et al.
D495,694 S 9/2004 Chase et al.
6,788,527 B2 9/2004 Doczy et al.
6,819,304 B2 11/2004 Branson
6,829,140 B2 12/2004 Shimano et al.
6,859,219 B1 2/2005 Sall
D504,128 S 4/2005 Maskatia
6,882,335 B2 * 4/2005 Saarinen G06F 1/1605 345/156
6,944,012 B2 9/2005 Doczy et al.
6,963,485 B2 11/2005 Hong
D512,997 S 12/2005 Lee et al.
6,972,752 B2 12/2005 Nako et al.
D513,509 S 1/2006 Kawa
D516,552 S 3/2006 Iseki
D517,541 S 3/2006 Maskatia
D518,042 S 3/2006 Kanayama
7,035,665 B2 4/2006 Kido et al.
D523,429 S 6/2006 Lin
7,061,472 B1 6/2006 Schweizer et al.
7,072,179 B1 7/2006 Curran et al.
D528,541 S 9/2006 Maskatia
D528,993 S 9/2006 Wilson
7,138,962 B2 11/2006 Koenig
7,148,877 B2 * 12/2006 Chang G06F 1/1677 345/104
D534,531 S 1/2007 Ogasawara
D535,292 S 1/2007 Shi et al.
7,164,432 B1 1/2007 Amemiya
7,187,364 B2 * 3/2007 Duarte G06F 1/162 345/156
D544,846 S 6/2007 Kindle et al.
7,239,508 B2 7/2007 Ferrucei
7,250,207 B1 7/2007 Heal et al.
7,366,994 B2 4/2008 Loui
7,382,607 B2 * 6/2008 Skillman 361/679.55
7,428,142 B1 9/2008 Ligtenberg et al.
7,433,179 B2 * 10/2008 Hisano G06F 1/1616 345/156
D581,371 S 11/2008 Richmond
7,467,356 B2 12/2008 Gettman et al.
7,522,946 B2 4/2009 Im
D593,085 S 5/2009 Behar et al.
D593,086 S 5/2009 Behar et al.
D593,091 S 5/2009 Behar et al.
D605,635 S 12/2009 Edahiro et al.
7,698,407 B2 4/2010 Mattox, Jr. et al.
7,756,928 B1 7/2010 Meenan et al.
7,814,425 B1 10/2010 O'Shaugnessy et al.
7,869,834 B2 1/2011 Seol et al.
8,289,688 B2 10/2012 Behar et al.
8,300,022 B2 * 10/2012 Brenneman G06F 1/1616
8,464,161 B2 6/2013 Giles et al.
8,577,957 B2 11/2013 Behar et al.
8,612,888 B2 12/2013 Pennington et al.
8,624,844 B2 1/2014 Behar et al.
2001/0032320 A1 10/2001 Abdelnur et al.
2002/0005818 A1 1/2002 Bruzzone
2002/0010707 A1 1/2002 Chang et al.
2002/0021258 A1 2/2002 Koenig
2003/0048595 A1 3/2003 Hsieh et al.
2003/0080995 A1 5/2003 Tenenbaum et al.
2003/0107603 A1 6/2003 Clapper
2003/0109232 A1 6/2003 Park et al.
2004/0001049 A1 1/2004 Oakley
2004/0025993 A1 * 2/2004 Russell 150/154
2004/0203535 A1 10/2004 Kim et al.
2004/0207568 A1 10/2004 Ooshima et al.
2004/0212602 A1 10/2004 Nako et al.

(56) **References Cited**

U.S. PATENT DOCUMENTS

2004/0228076	A1	11/2004	Clapper	
2005/0005241	A1	1/2005	Hunleth et al.	
2005/0010860	A1	1/2005	Weiss et al.	
2005/0018396	A1	1/2005	Nakajima et al.	
2005/0041378	A1	2/2005	Hamada et al.	
2005/0063145	A1	3/2005	Homer et al.	
2005/0071782	A1	3/2005	Barrett et al.	
2005/0083642	A1	4/2005	Senpuku et al.	
2005/0091596	A1	4/2005	Anthony et al.	
2005/0093868	A1*	5/2005	Hinckley	G06F 3/011 345/502
2005/0128695	A1	6/2005	Han	
2005/0134717	A1	6/2005	Misawa	
2005/0146845	A1	7/2005	Moscovitch	
2005/0210399	A1	9/2005	Filner et al.	
2005/0221865	A1	10/2005	Nishiyama et al.	
2005/0257400	A1	11/2005	Sommerer et al.	
2005/0282596	A1	12/2005	Park et al.	
2006/0015823	A1	1/2006	Chao et al.	
2006/0123353	A1	6/2006	Matthews et al.	
2006/0126284	A1	6/2006	Moscovitch	
2006/0238439	A1	10/2006	Fuller et al.	
2006/0264243	A1	11/2006	Aarras	
2006/0268500	A1	11/2006	Kuhn	
2006/0277167	A1	12/2006	Gross et al.	
2007/0073833	A1	3/2007	Roy et al.	
2007/0120762	A1*	5/2007	O'Gorman	G06F 1/1616
2007/0138806	A1	6/2007	Ligtenberg et al.	
2007/0182663	A1	8/2007	Biech	
2007/0240076	A1	10/2007	Astala et al.	
2007/0242421	A1	10/2007	Goschin et al.	
2007/0247446	A1	10/2007	Orsley et al.	
2007/0296820	A1*	12/2007	Lonn	G06K 9/00248 348/207.99
2008/0024388	A1	1/2008	Bruce	
2008/0024465	A1	1/2008	Hawkins et al.	
2008/0042987	A1	2/2008	Westerman et al.	
2008/0059888	A1	3/2008	Dunko	
2008/0062625	A1	3/2008	Batio	
2008/0074831	A1*	3/2008	Lee et al.	361/683
2008/0088602	A1*	4/2008	Hotelling	G06F 1/1626 345/173
2008/0092039	A1	4/2008	Brockway et al.	
2008/0134093	A1	6/2008	Dharmarajan et al.	
2008/0158795	A1	7/2008	Aoki et al.	
2008/0174570	A1	7/2008	Jobs et al.	
2008/0209493	A1	8/2008	Choi et al.	
2008/0235594	A1	9/2008	Bhumkar et al.	
2008/0284738	A1	11/2008	Hovden et al.	
2009/0007001	A1	1/2009	Morin et al.	
2009/0019383	A1	1/2009	Riley et al.	
2009/0019479	A1	1/2009	Kwak et al.	
2009/0150784	A1	6/2009	Denney et al.	
2009/0150826	A1	6/2009	Lyndersay et al.	
2009/0190295	A1	7/2009	Chin et al.	
2009/0193364	A1	7/2009	Jarrett et al.	
2009/0244012	A1	10/2009	Behar et al.	
2009/0244832	A1	10/2009	Behar et al.	
2009/0249244	A1	10/2009	Robinson et al.	
2009/0275366	A1	11/2009	Schilling	
2009/0300511	A1	12/2009	Behar et al.	
2009/0303205	A1*	12/2009	Seibert	G06F 1/1616 345/204
2009/0303676	A1	12/2009	Behar et al.	
2009/0322790	A1	12/2009	Behar et al.	
2010/0174993	A1	7/2010	Pennington et al.	
2014/0282263	A1	9/2014	Pennington et al.	
2015/0277688	A1	10/2015	Behar et al.	

FOREIGN PATENT DOCUMENTS

EP	0588210	A1	3/1994
GB	2321982		8/1998
JP	5-197507	A	8/1993
JP	6090200	A	3/1994
JP	6-242853	A	9/1994
JP	6-259166	A	9/1994
JP	8-179851	A	7/1996
JP	10-111658	A	4/1998
JP	11-296259		10/1999
JP	2001-167211	A	6/2001
JP	2004-302179	A	10/2004
JP	2005-159741	A	6/2005
JP	2005-242436	A	9/2005
JP	2006-227409		8/2006
KR	1020000036647		6/2002
WO	WO 95/24007		9/1995

OTHER PUBLICATIONS

Office Action dated Apr. 4, 2011, U.S. Appl. No. 12/170,951.
International Search Report from a commonly owned PCT application PCT/US09/39117, dated Sep. 29, 2009.
Miller, M., "Creating a Digital Home Entertainment System with Windows Media Center", Apr. 2006, Que.
http://laptop.org/en/laptop/start/ebook.shtml accessed on Sep. 29, 2008.
Japanese Office Action mailed Dec. 4, 2012 from national phase entry of the corresponding PCT application.
Partial translation of Japanese Office Action from national phase examination of the Corresponding PCT application. (Letter dated Dec. 7, 2012 including English partial translation of JP OA dated Dec. 4, 2012).
Search Report from corresponding International Application PCT/US2009/038599 dated Mar. 6, 2009.
European Communication from corresponding European Application No. 09727165.4 dated Nov. 23, 2015.
International Search Report and Written Opinion for International Application No. PCT/US2009/39117 mailed Sep. 28, 2009.
Final Japanese Office Action mailed Apr. 16, 2013 in connection with Japanese Application No. 2011-503058.
European Examination Report dated Nov. 22, 2016 in connection with European Application No. 09727165.4.

* cited by examiner

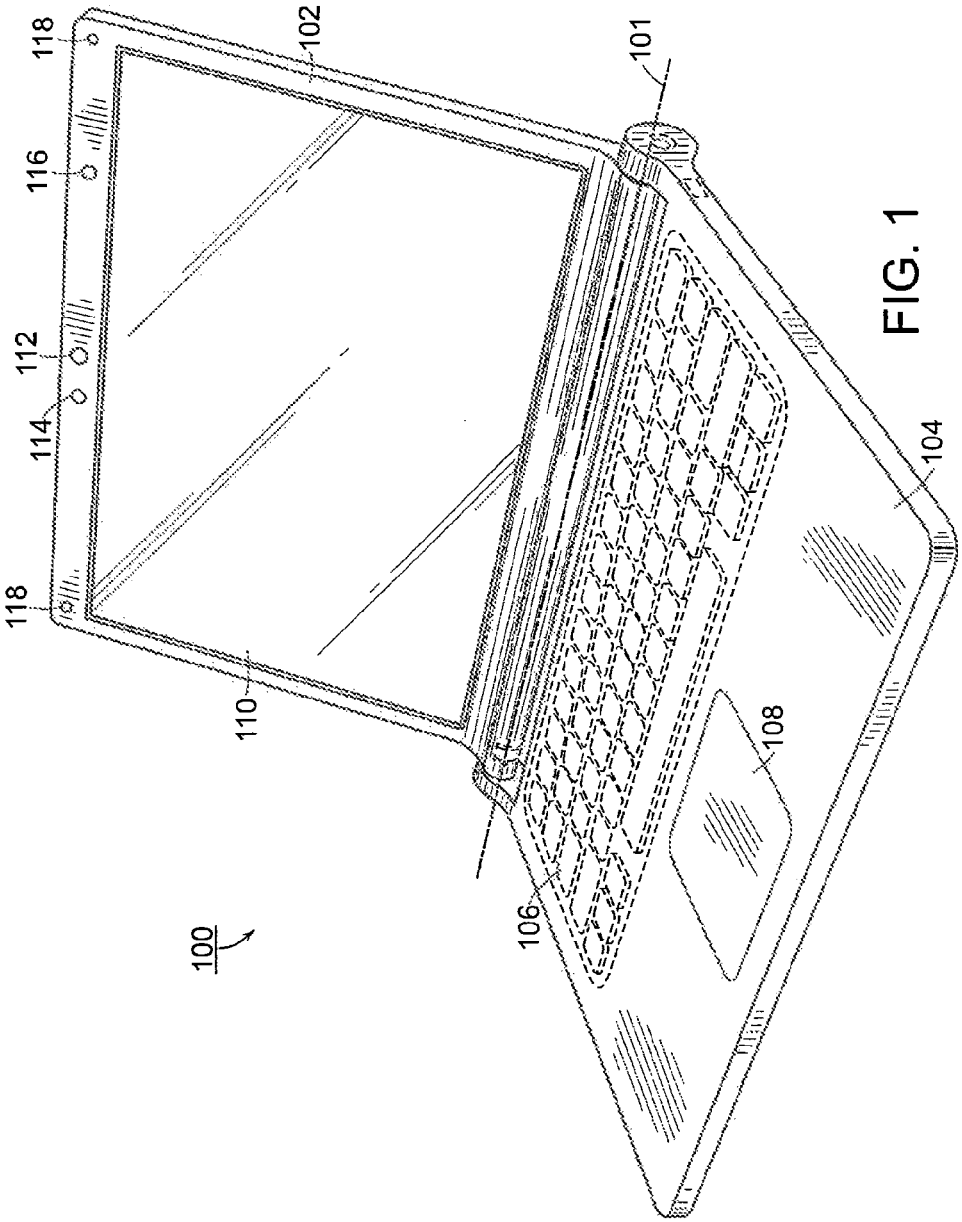

FIG. 1

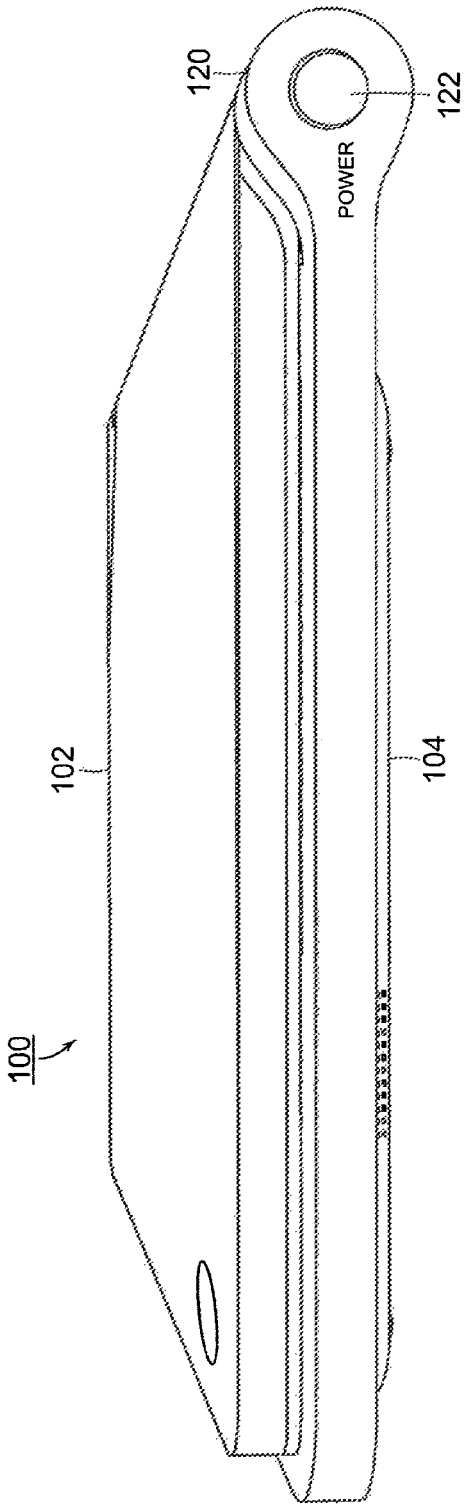

FIG. 2

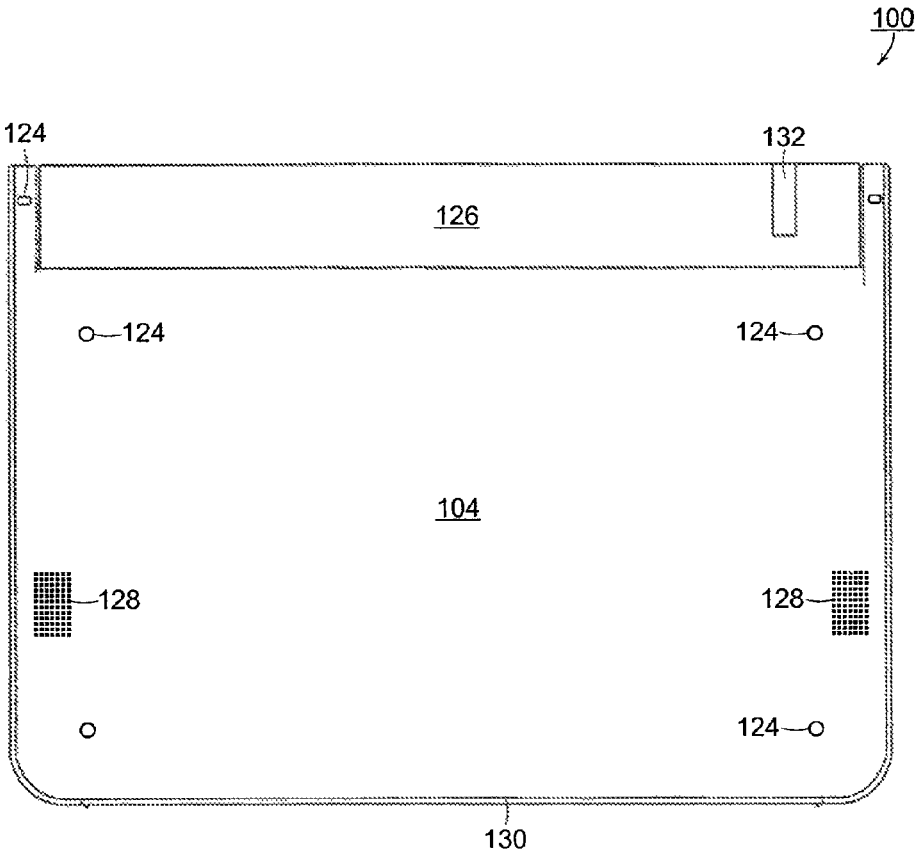

FIG. 3

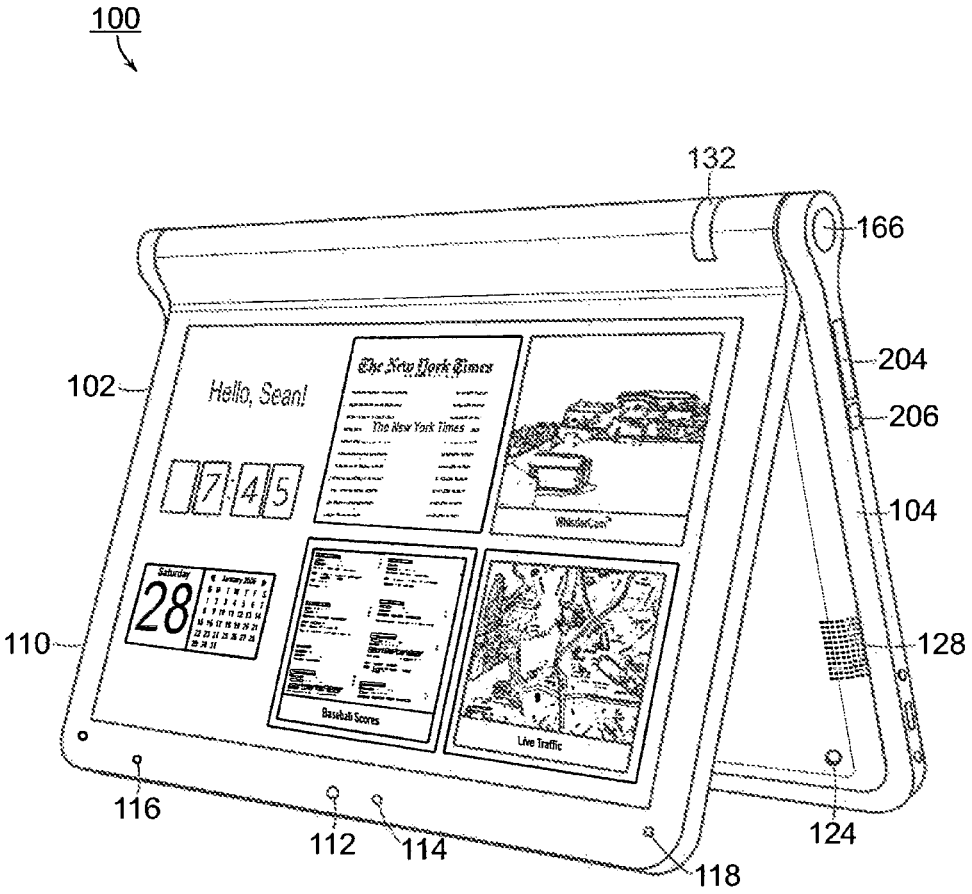
100
132
166
204
206
104
128
102
110
116
112
114
118
124
Hello, Sean!
The New York Times
Baseball Scores
Live Traffic

FIG. 4

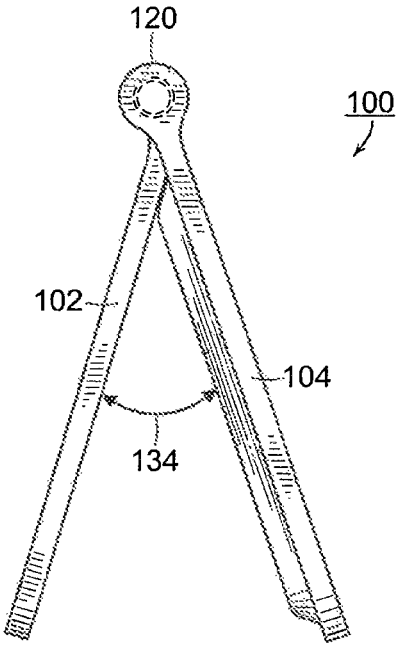

FIG. 5

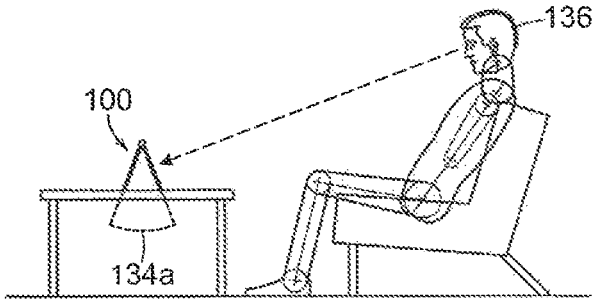

FIG. 6A

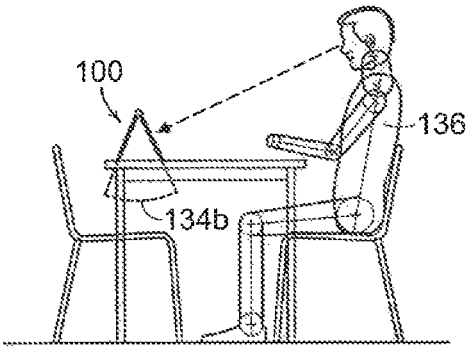

FIG. 6B

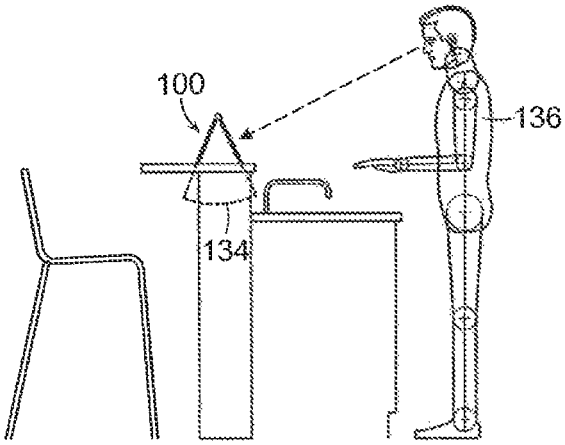

FIG. 6C

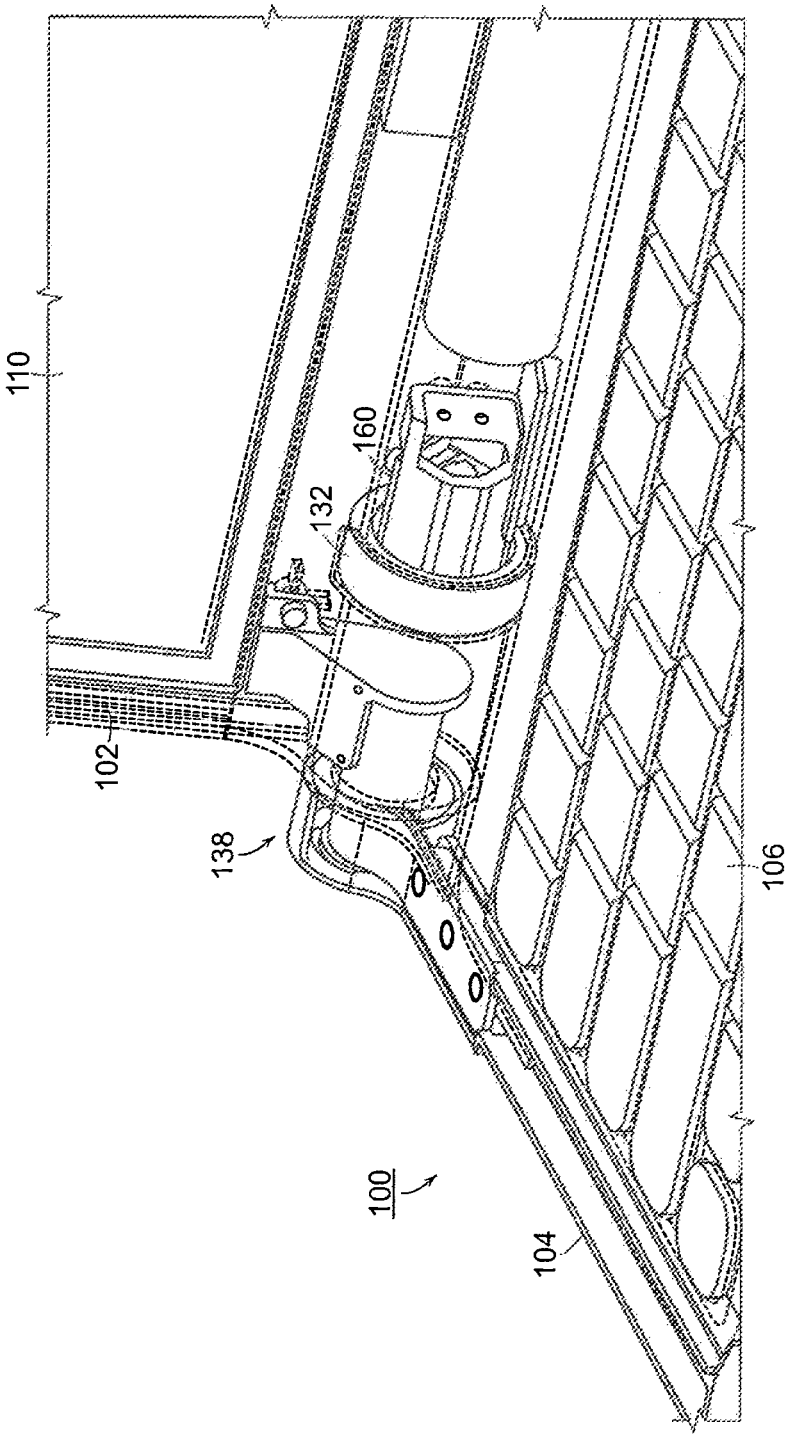

FIG. 7A

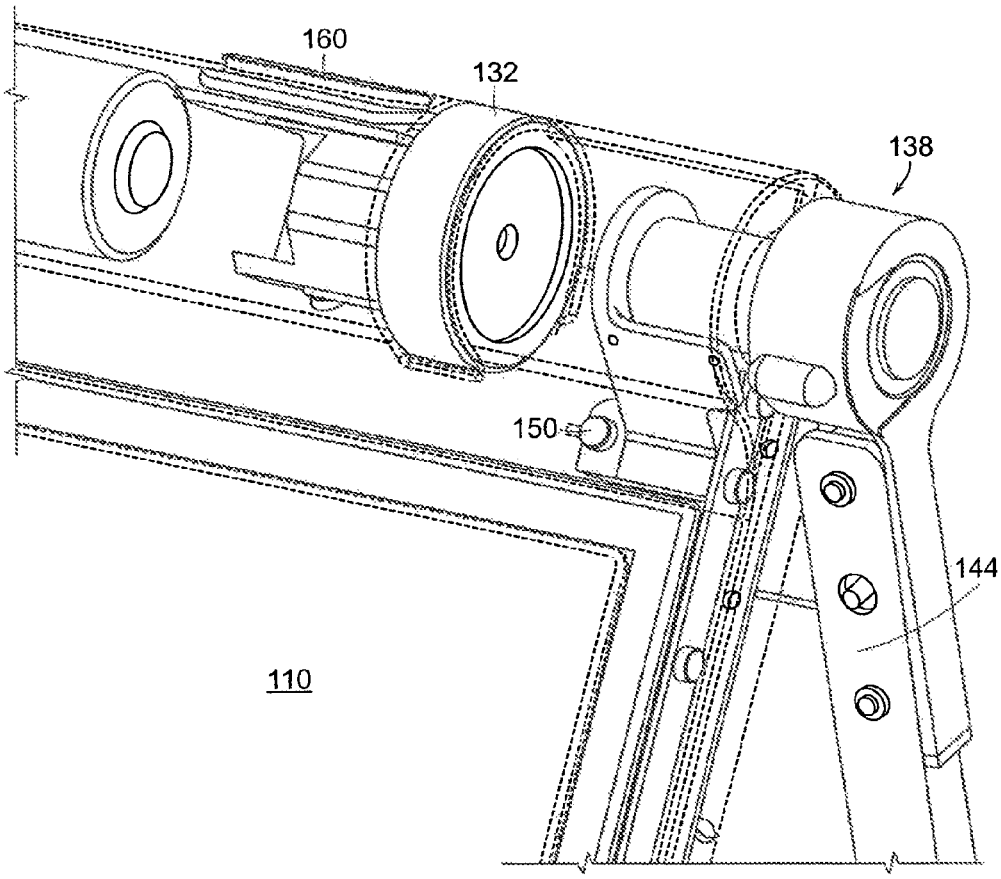

FIG. 7B

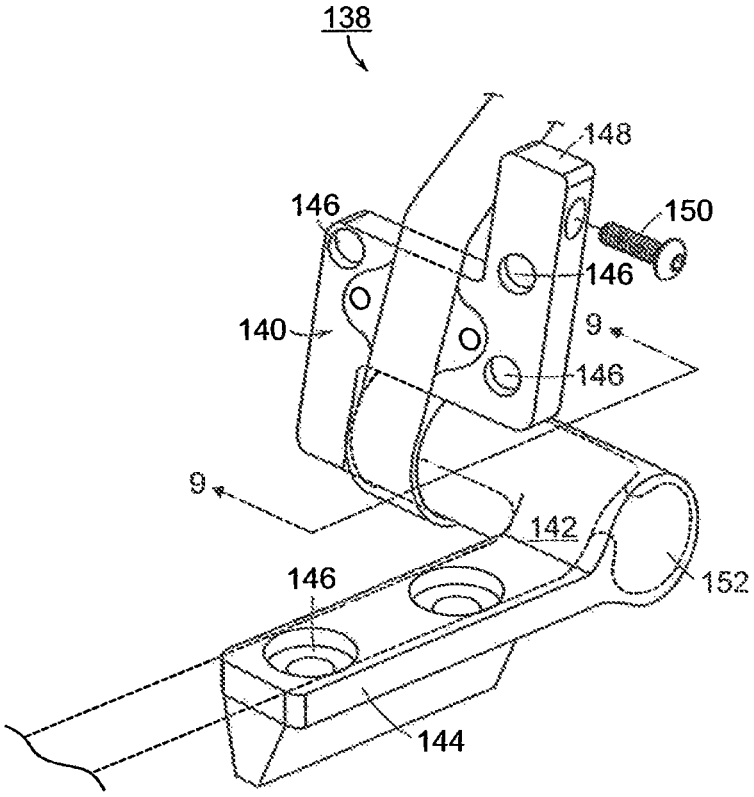

FIG. 8

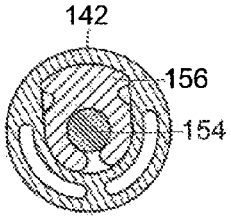

FIG. 9

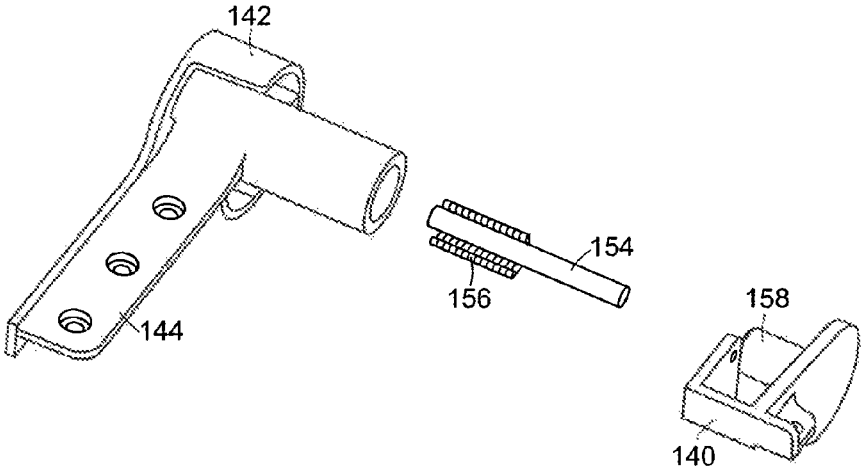

FIG. 10

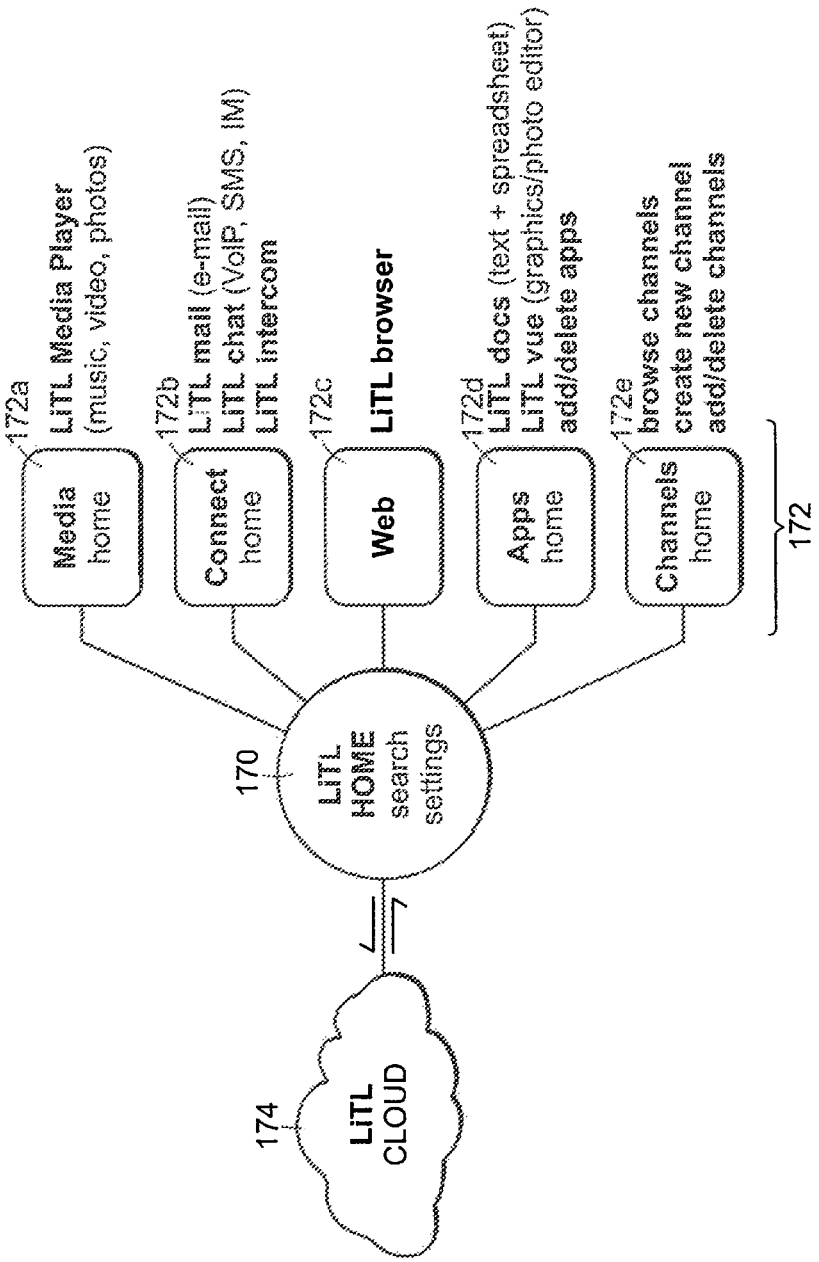
172a
LiTL Media Player
(music, video, photos)
Media
home
172b
LiTL mail (e-mail)
LiTL chat (VoIP, SMS, IM)
LiTL intercom
Connect
home
172c
LiTL browser
Web
172d
LiTL docs (text + spreadsheet)
LiTL vue (graphics/photo editor)
add/delete apps
Apps
home
172e
browse channels
create new channel
add/delete channels
Channels
home
172
170
LiTL
HOME
search
settings
174
LiTL
CLOUD

FIG. 11

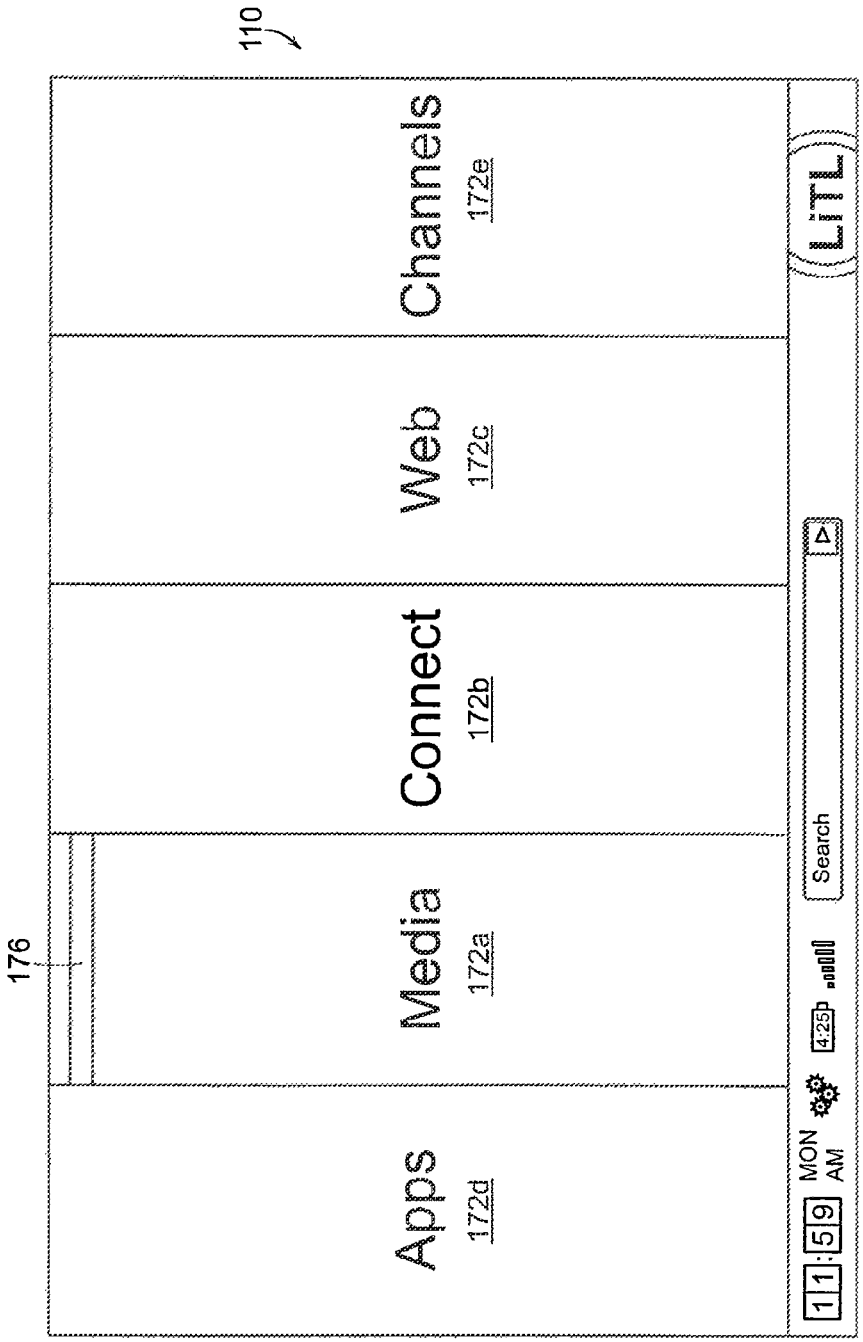
110
176
Apps
172d
Media
172a
Connect
172b
Web
172c
Channels
172e
11:59
MON
AM
4:25
Search
LiTL

FIG. 12

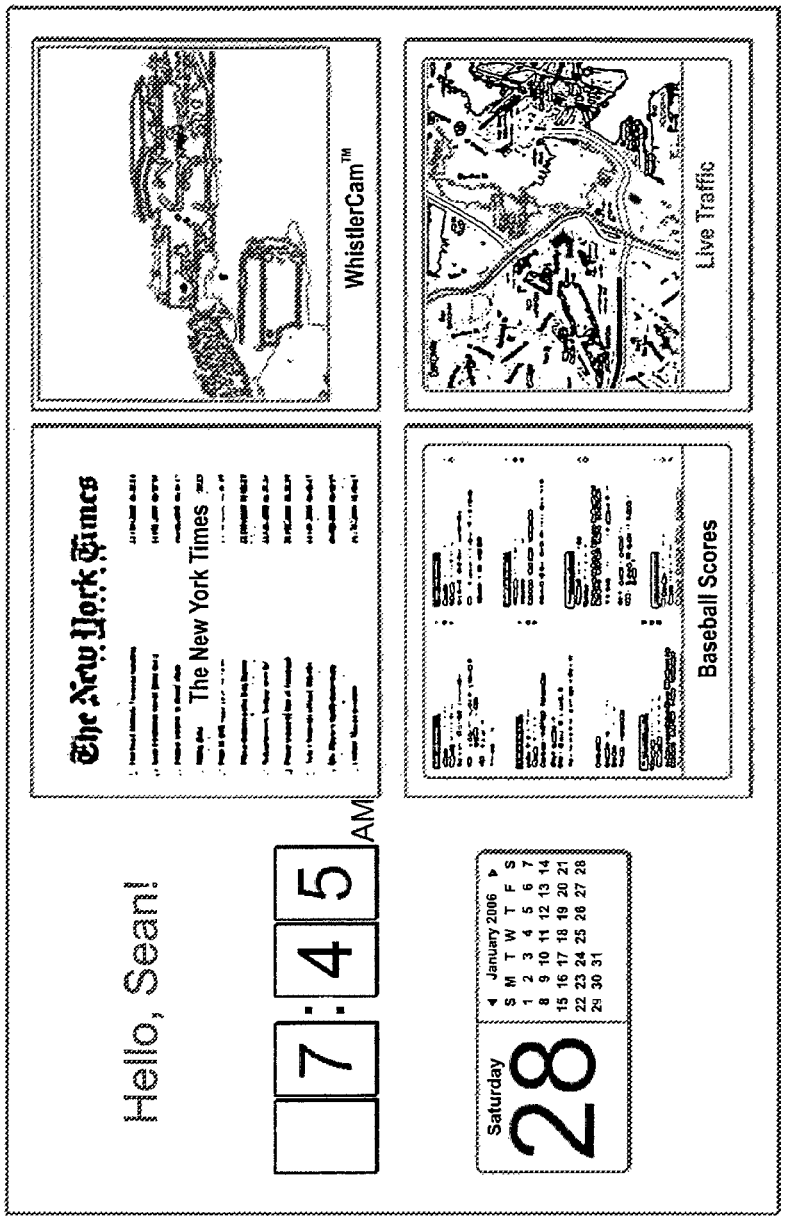
Hello, Sean!
7 : 4 5 AM
Saturday
28
January 2006
S M T W T F S
1 2 3 4 5 6 7
8 9 10 11 12 13 14
15 16 17 18 19 20 21
22 23 24 25 26 27 28
29 30 31
The New York Times
WhistlerCam™
Baseball Scores
Live Traffic
110

FIG. 13

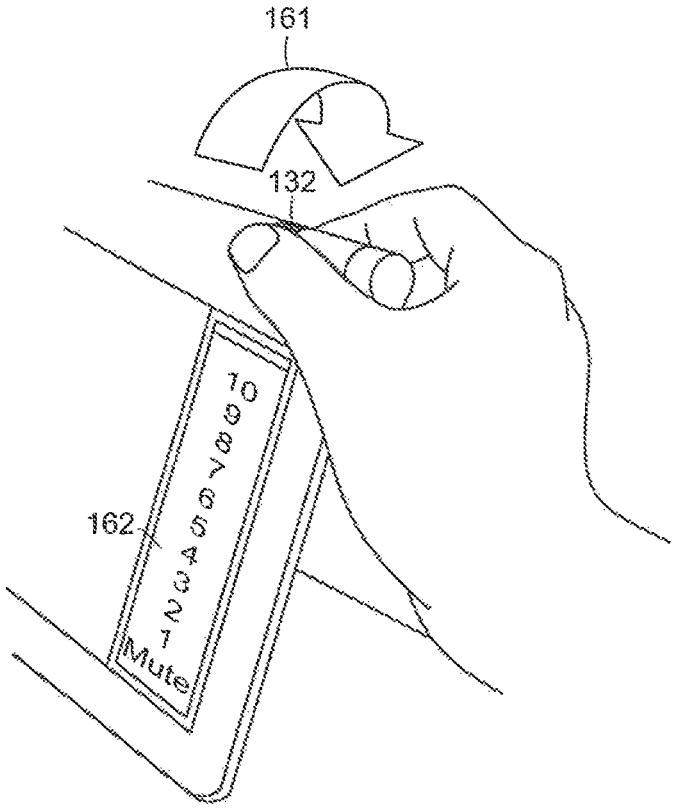

FIG. 14

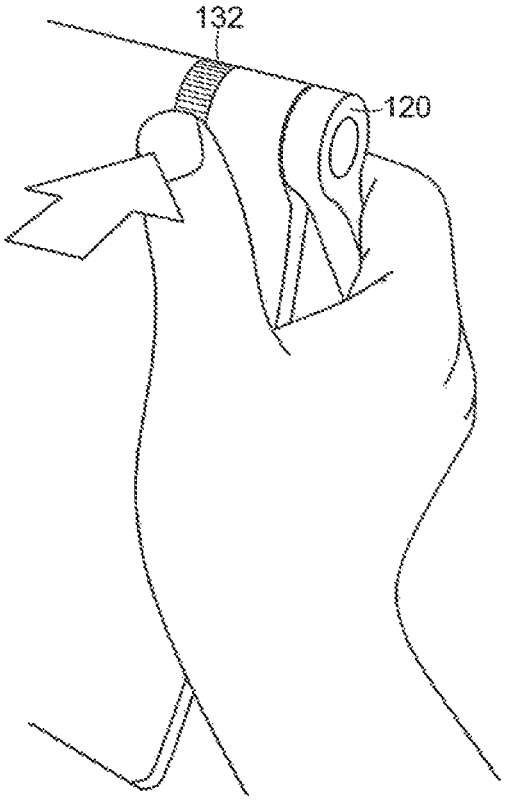

FIG. 15

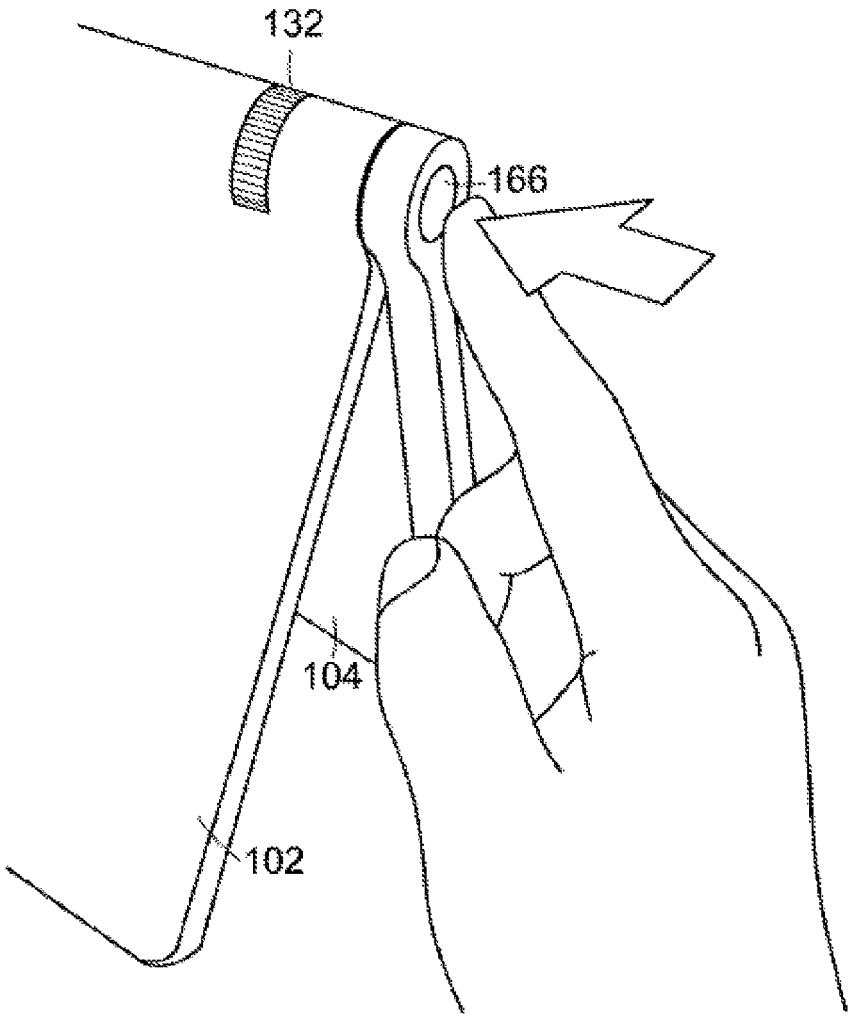

FIG. 16

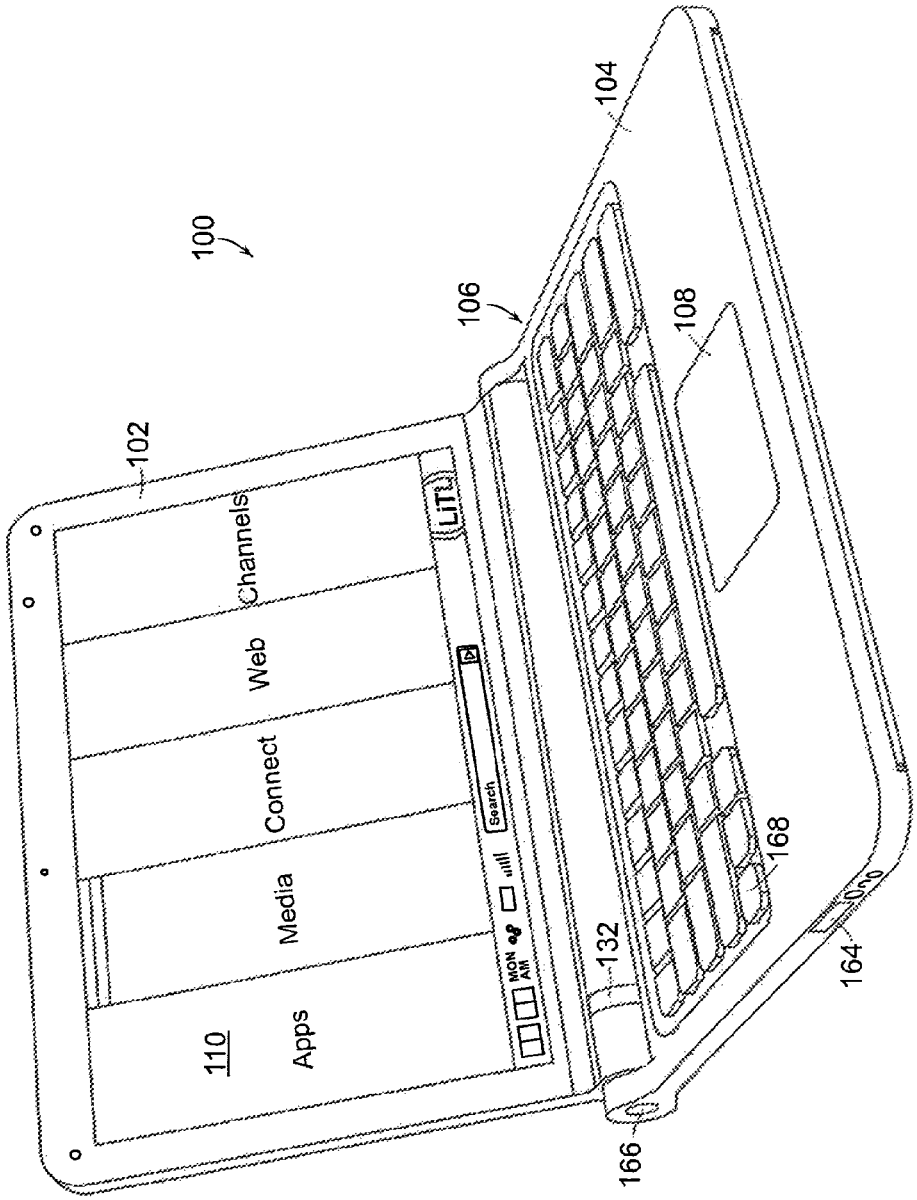
100
102
104
106
108
110
Apps
Media
Connect
Web
Channels
LIT
Search
MON
AM
132
164
166
168

FIG. 17

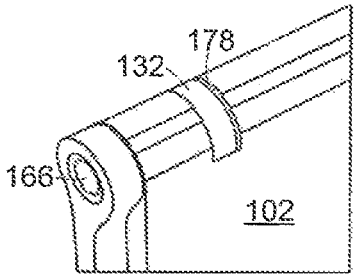

FIG. 18

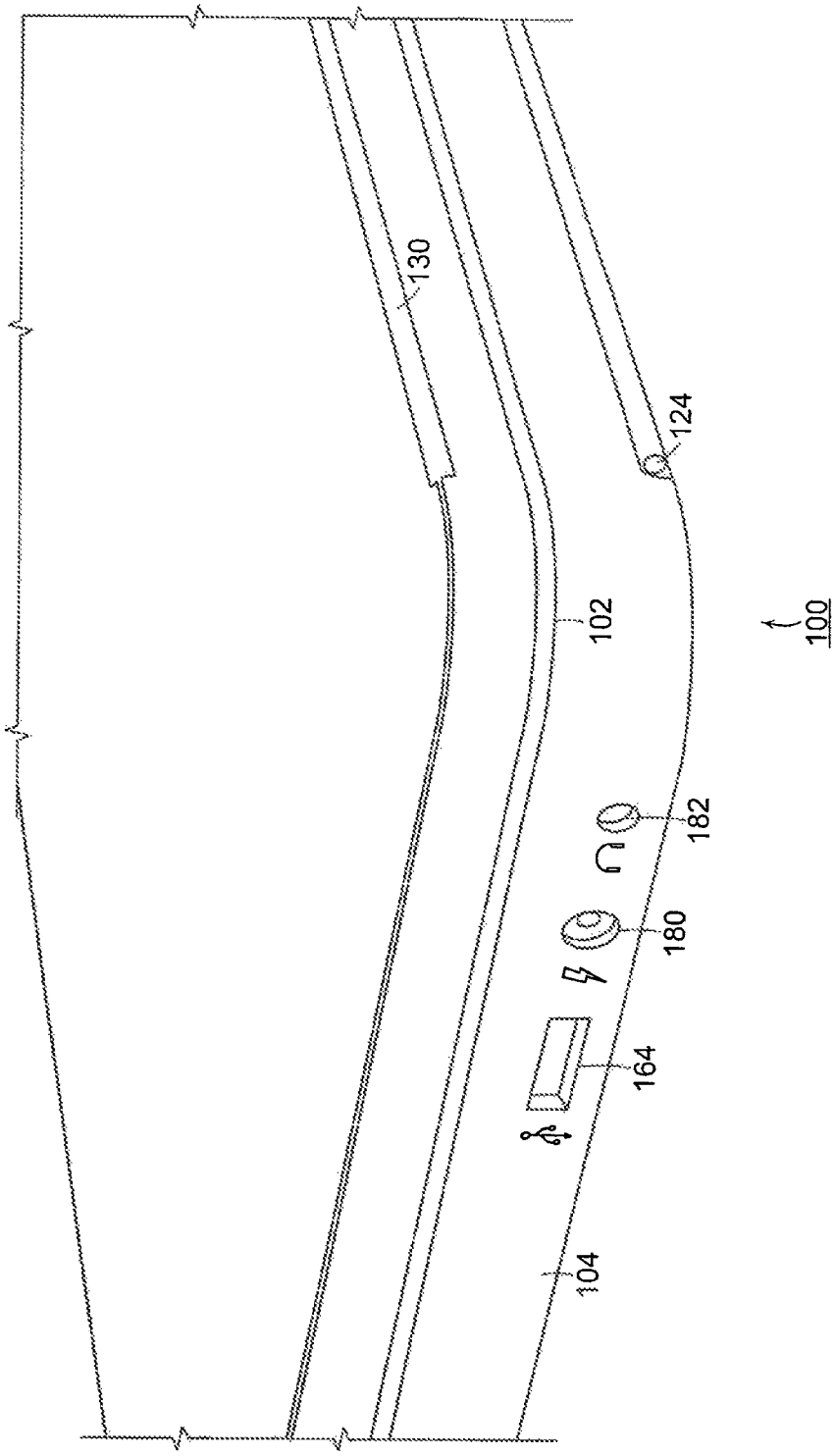

FIG. 19

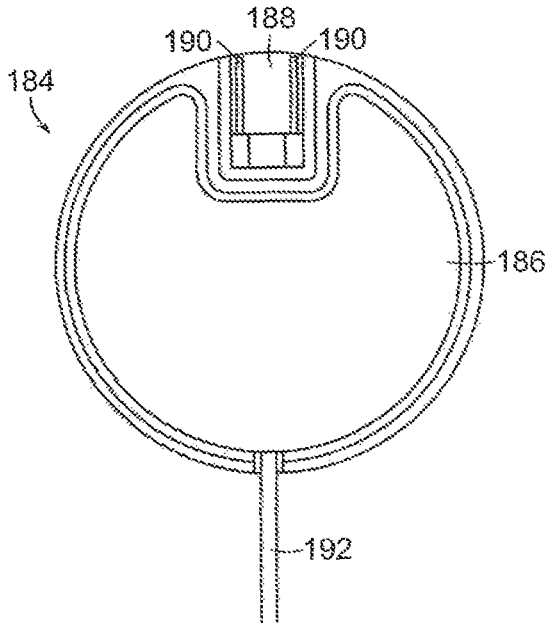

FIG. 20

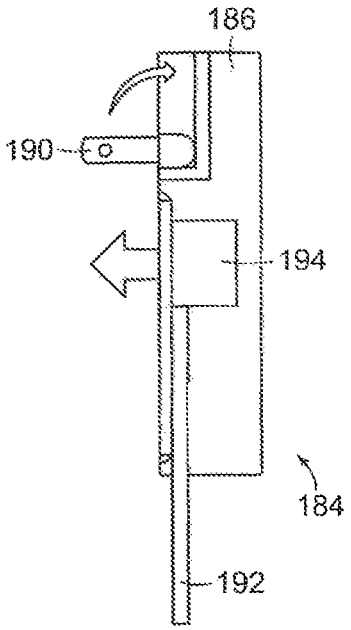

FIG. 21

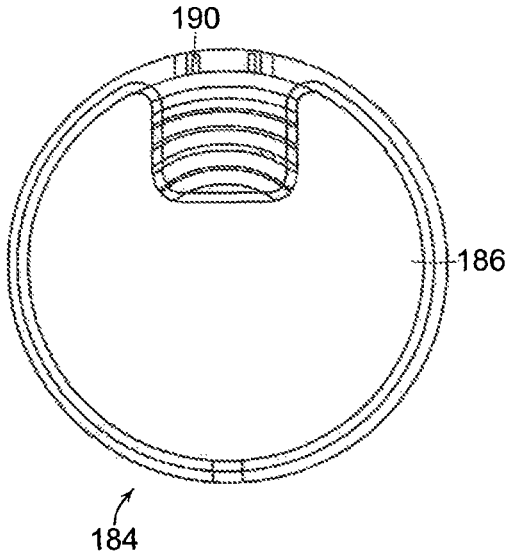

FIG. 22A

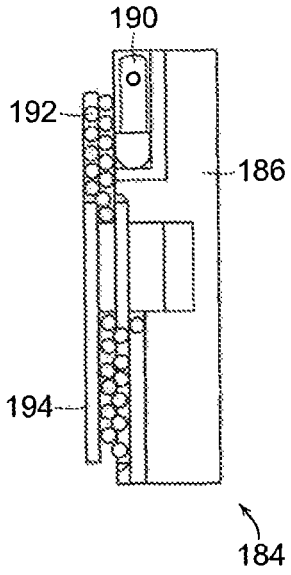

FIG. 22B

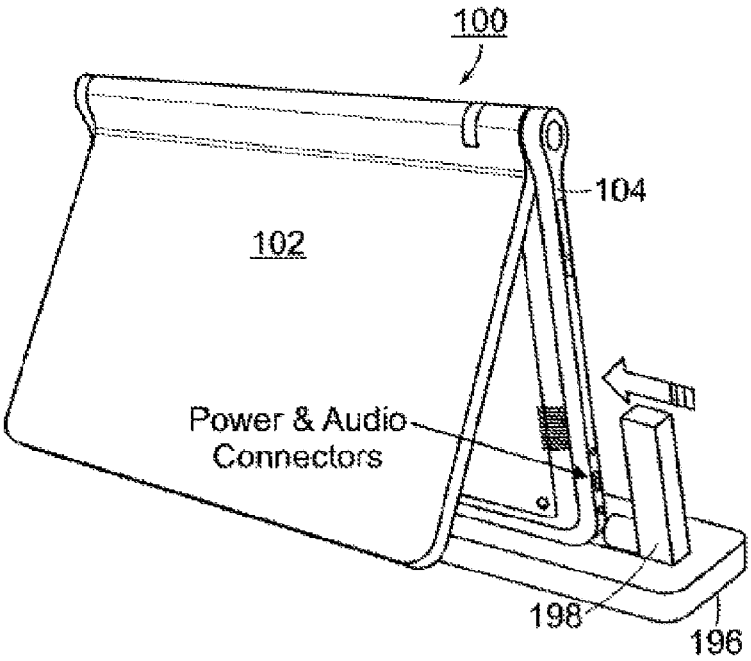

FIG. 23

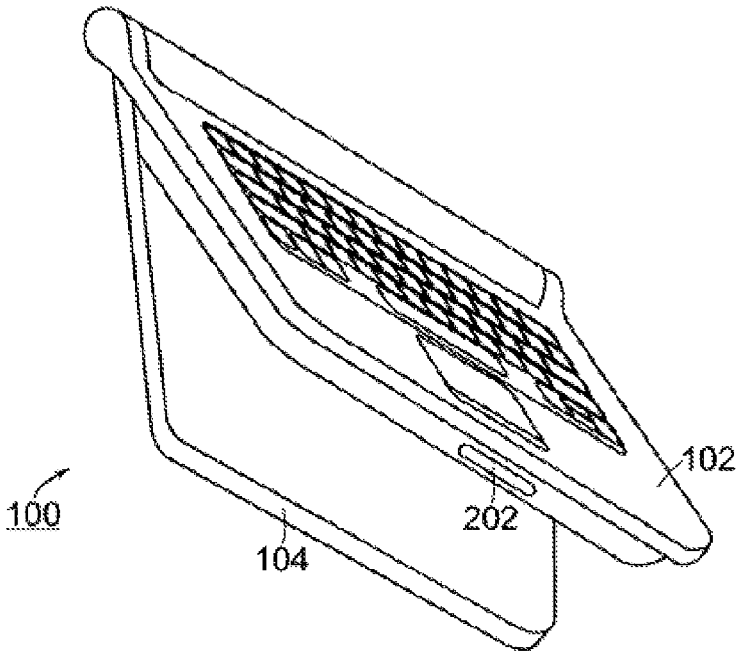

FIG. 24

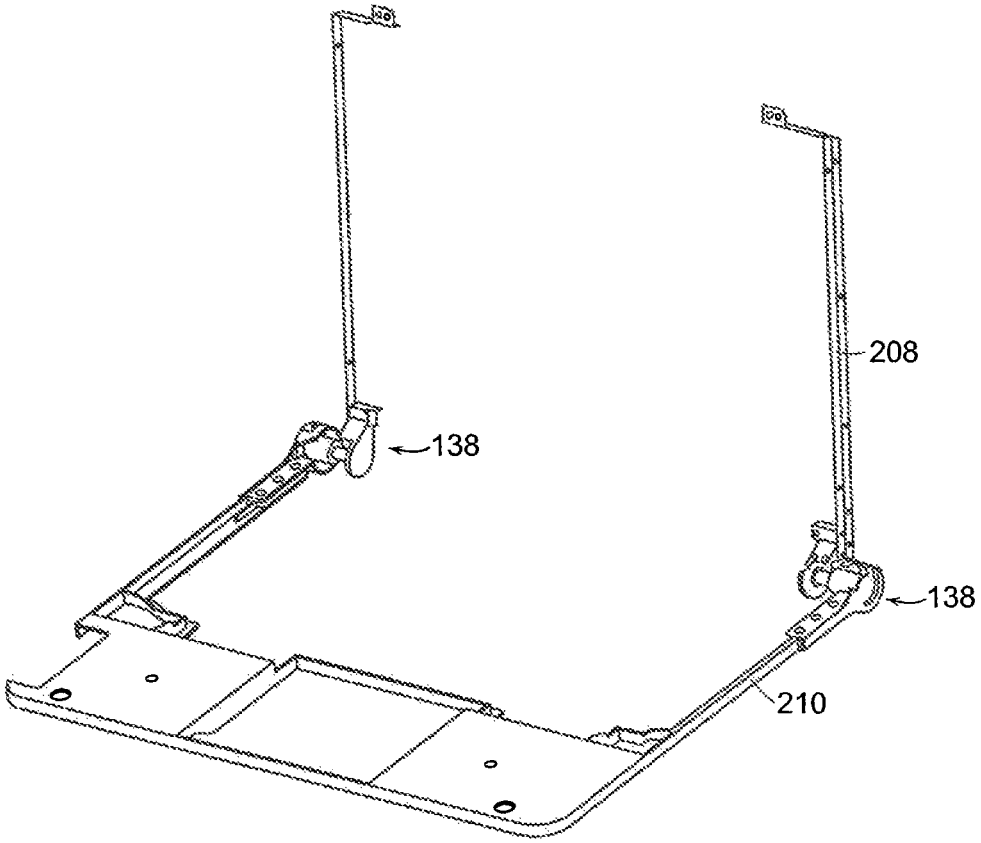

FIG. 25

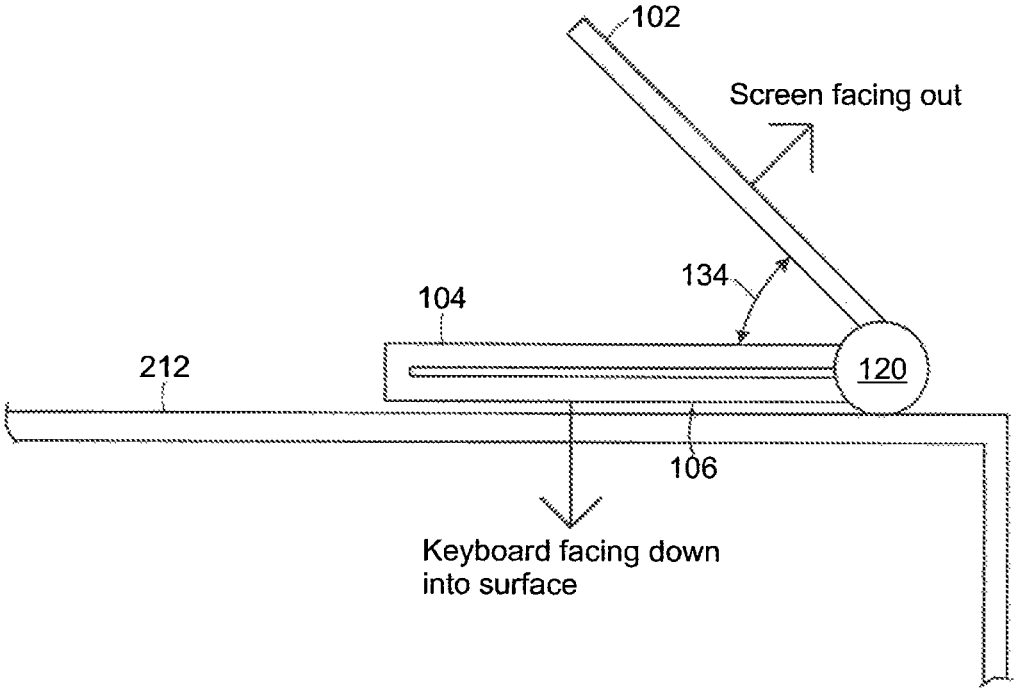
102
Screen facing out
134
104
212
120
106
Keyboard facing down
into surface

FIG. 26

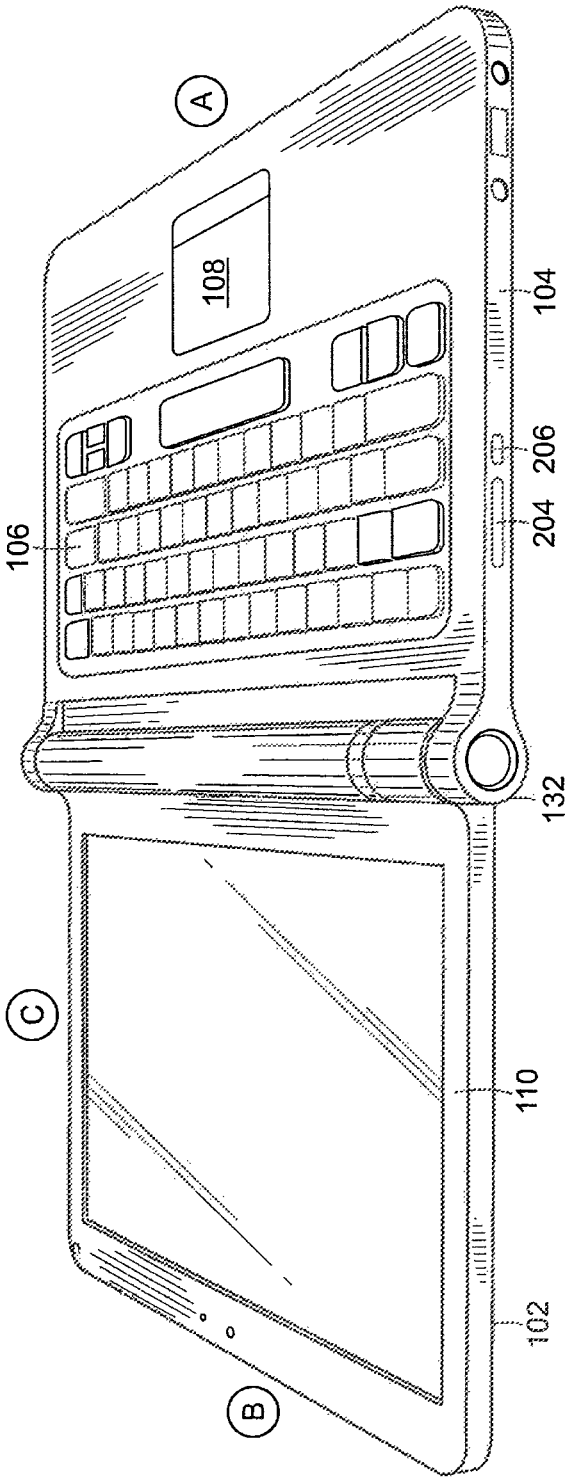

FIG. 27

PORTABLE COMPUTER WITH MULTIPLE DISPLAY CONFIGURATIONS

RELATED APPLICATIONS

This application is a continuation of and claims priority under 35 U.S.C. §120 to U.S. application Ser. No. 12/170,939, entitled "PORTABLE COMPUTER WITH MULTIPLE DISPLAY CONFIGURATIONS," filed Jul. 10, 2008, which application claims priority under 35 U.S.C. §119(e) to U.S. Provisional Patent Application No. 61/041,365 filed Apr. 1, 2008, entitled "PORTABLE COMPUTER WITH MULTIPLE DISPLAY CONFIGURATIONS," which are incorporated herein by reference in its entirety. This application is also a continuation of and claims priority under 35 U.S.C. §120 to U.S. application Ser. No. 12/170,951, entitled "PORTABLE COMPUTER WITH MULTIPLE DISPLAY CONFIGURATIONS," filed Jul. 10, 2008, which application claims priority under 35 U.S.C. §119(e) to U.S. Provisional Patent Application No. 61/041,365 filed Apr. 1, 2008, entitled "PORTABLE COMPUTER WITH MULTIPLE DISPLAY CONFIGURATIONS."

BACKGROUND

Field of Invention

The present invention relates generally to portable computers and, more particularly, to a portable computer that is configurable into different functional and positional modes.

Discussion of Related Art

Portable computers, such as laptop computers or notebook computers, have become increasingly popular and ubiquitous in the home and workplace. Conventional portable computers most commonly have a "clam-shell" configuration, with a base including the keyboard, various ports, connectors and/or inputs (e.g., for power and connecting peripheral devices), and the majority of the electrical components (e.g., the central processing unit and memory), and a display component pivotably coupled to the base by a hinge. The display component is movable about the hinge between a closed position, with the display screen positioned adjacent the keyboard, and an open position, with the display screen inclined at a desired viewing angle.

Some portable computers are able to accept user inputs via a touch screen in addition to via conventional tools, such as a keyboard or mouse. The use of a touch screen to input data is sometimes referred to as operating in "tablet mode" because the computer is being used in a manner similar to a tablet of paper. U.S. Pat. No. 6,771,494 discloses a hybrid tablet-type portable computer that is capable of operating either as a normal laptop computer receiving user input via a keyboard ("laptop mode"), or as a tablet computer receiving user input via a touch screen. The '494 patent further discloses that the display component of the computer is attached to the base of the computer by hinges that allow the display to be tilted relative to the base (for laptop mode), and to be rotated and folded against the base to configure the computer into tablet mode.

Another variation of a portable computer with a moveable display is disclosed in U.S. Pat. No. 6,266,236. The '236 patent discloses a computer including a base, a display member and an arm assembly coupling the display member to the base. According to the '236 patent, the arm assembly allows pivotable movement of the display member between a plurality of positions, including a notebook mode configuration, a tablet mode configuration, a presentation mode configuration, and a closed mode.

SUMMARY OF INVENTION

Aspects and embodiments of the present invention are directed to a portable computer that is configurable between a laptop mode (in which the portable computer has a conventional laptop appearance) and an easel mode in which the base of the computer and its display component stand upright forming an inverted "V," as discussed further below. The display component is pivotably coupled to the base of the portable computer by a hinge that allows the display component to be rotated or tilted about a longitudinal axis running along an interface between the base and the display component. Unlike the computers discussed in U.S. Pat. No. 6,266,236 and U.S. Pat. No. 6,771,494 above, the portable computer according to embodiments of the invention does not require an arm assembly, nor multiple, different hinge assemblies to be configured into the different modes. Furthermore, the portable computer according to embodiments of the invention is capable of different display modes and different functionality in the different configurations, as discussed below.

Further aspects and embodiments are directed to a portable computer having an embedded scroll wheel that can be configured to allow a user to control various features and functionality of the portable computer. For example, as discussed further below the scroll wheel can be used to navigate among information displayed on the portable computer's display and/or to alter operating modes of the portable computer, and/or to control features such as volume, display brightness, etc.

According to one embodiment, a portable computer is configurable between various modes, including a closed mode, a laptop mode, an easel mode, a flat mode and a frame mode. The portable computer may comprise a display component including a display screen, a base, and a hinge assembly at least partially housed within the base and configured to pivotably couple the display component to the base. The display component may be rotatable about a longitudinal axis running along an interface between the display component and the base. In the closed mode, the display screen may be disposed substantially against the base, and rotating the display component about the longitudinal axis up to approximately 180 degrees from the closed mode may configure the portable computer into the laptop mode. Rotating the display component about the longitudinal axis beyond approximately 180 degrees axis from the closed mode may configure the portable computer into the easel mode.

In one example of the portable computer, the display component is rotatable about the longitudinal axis up to approximately 320 degrees from the closed mode. In another example, the portable computer comprises a display orientation module that displays content on the display screen in one of a plurality of orientations relative to the longitudinal axis. The orientation of the displayed content may be dependent on the current display mode of the portable computer, or may be configurable responsive to a user input. The portable computer may further comprise a mode sensor which detects a current display mode of the portable computer, and the display orientation module may display content on the display screen in an orientation dependent on the current display mode detected by the mode sensor. Depending on the hinge assembly used, the longitudinal axis may comprises multiple parallel axes, and the hinge assembly

may be configured to permit rotation of the display component about any of the multiple parallel axes to configure the portable computer between the plurality of display modes.

Another embodiment is directed to a portable computer comprising a base, a display component rotatably coupled to the base, and means for rotating the display component in a single direction relative to the base to configure the portable computer between a laptop mode and an easel mode.

In another embodiment of a portable computer configurable between multiple modes including a laptop mode and an easel mode, the portable computer comprises a display component, a base, and a hinge assembly configured to rotatably couple the display component to the base. The hinge assembly may be configured to permit rotation of the display component about a single axis to configure the portable computer between the laptop mode and the easel mode. In one example, the single axis is a longitudinal axis running along an interface between the display component and the base. The portable computer may further comprise a scroll wheel disposed at least partially about the longitudinal axis. In one example, the display component comprises a display screen, and the scroll wheel is configured to permit a user to manipulate content displayed on the display screen.

Another embodiment is directed to a method of automatically orienting content displayed on a portable computer. The method comprises rotating a display component of the portable computer about a longitudinal axis running along an interface between the display component and a base of the portable computer, detecting a degree of rotation of the display component relative to the base, providing a signal representative of the degree of rotation of the display component, and automatically configuring an orientation, relative to the longitudinal axis, of the content displayed on the portable computer responsive to the signal.

According to another embodiment, a portable computer comprises a base unit, a display unit including a display screen configured to display content, an orientation sensor which detects an orientation of the display unit relative to the base unit, and a display orientation module which orients the content displayed on the display screen responsive to the orientation detected by the orientation sensor.

Another embodiment of a portable computer comprises a base, a display component rotatably coupled to the base such that the display component and the base are rotatable with respect to one another about a longitudinal axis running along an interface between the display component and the base, the display component including a display screen, and a scroll wheel disposed at least partially within the base and rotatable about the longitudinal axis, the scroll wheel configured to permit a user to control at least one of operating parameters of the portable computer and content displayed on the display screen. In one example, the scroll wheel is configured to permit the user to adjust a volume of sound produced by the portable computer. In another example, the screen is configured to display at least one of a plurality of modes of content, and the scroll wheel is configured to permit the user to select a mode of content for display by the portable computer. The portable computer may further comprise one or more navigation buttons that may be used in conjunction with the scroll wheel to control aspects of the portable computer and displayed content.

According to another embodiment, a portable computer is configurable between a plurality of display modes including a laptop mode and an easel mode, the portable computer comprising a base, a display component rotatably coupled to the base and including a screen which displays content, and a scroll wheel accessible in each of the plurality of display modes and configured to permit a user to manipulate at least one of operating parameters of the portable computer and the content displayed on the screen. In one example, the scroll wheel is disposed at leas partially about an axis of rotation of the display component relative to the base.

In another embodiment, a portable computer comprises a base, a display component including a screen configured to display content, a hinge assembly configured to rotatably couple the display component to the base and to permit rotation of the display component about a longitudinal axis running along an interface between the display component and the base, and a scroll wheel disposed at least partially about the longitudinal axis.

Still other aspects, embodiments, and advantages of these exemplary aspects and embodiments, are discussed in detail below. Moreover, it is to be understood that both the foregoing information and the following detailed description are merely illustrative examples of various aspects and embodiments, and are intended to provide an overview or framework for understanding the nature and character of the claimed aspects and embodiments. Any embodiment disclosed herein may be combined with any other embodiment in any manner consistent with the objects, aims, and needs disclosed herein, and references to "an embodiment," "some embodiments," "an alternate embodiment," "various embodiments," "one embodiment" or the like are not necessarily mutually exclusive and are intended to indicate that a particular feature, structure, or characteristic described in connection with the embodiment may be included in at least one embodiment. The appearances of such terms herein are not necessarily all referring to the same embodiment. The accompanying drawings are included to provide illustration and a further understanding of the various aspects and embodiments, and are incorporated in and constitute a part of this specification. The drawings, together with the remainder of the specification, serve to explain principles and operations of the described and claimed aspects and embodiments.

BRIEF DESCRIPTION OF THE DRAWINGS

Various aspects of at least one embodiment are discussed below with reference to the accompanying figures, which are not intended to be drawn to scale. Where technical features in the figures, detailed description or any claim are followed by references signs, the reference signs have been included for the sole purpose of increasing the intelligibility of the figures, detailed description, and claims. Accordingly, neither the reference signs nor their absence are intended to have any limiting effect on the scope of any claim elements. In the figures, each identical or nearly identical component that is illustrated in various figures is represented by a like numeral. For purposes of clarity, not every component may be labeled in every figure. The figures are provided for the purposes of illustration and explanation and are not intended as a definition of the limits of the invention. In the figures:

FIG. **1** is an illustration of one example of a portable computer, according to aspects of the invention, in a "laptop" configuration;

FIG. **2** is a view of the portable computer of FIG. **1** in the closed position;

FIG. **3** is a plan view of the exterior of the bottom of the portable computer of FIG. **1**;

FIG. **4** is a perspective view of the portable computer of FIG. **1** in the easel mode;

FIG. **5** is a side view of the portable computer of FIG. **4**, illustrating the adjustable angle of the easel mode;

FIGS. **6**A-C are diagrams illustrating different positions of the portable computer of FIG. **4** in easel mode;

FIG. **7**A is an illustration of a portion of the portable computer of FIG. **1** in the laptop mode, illustrating a hinge assembly according to aspects of the invention;

FIG. **7**B is an in illustration of a portion of the portable computer of FIG. **1** in the easel mode, illustrating the hinge assembly according to aspects of the invention;

FIG. **8** is a diagram of one example of the hinge assembly of FIGS. **7**A and **7**B;

FIG. **9** is a cross-sectional diagram of a portion of the hinge assembly of FIG. **8**, taken along line **9-9** in FIG. **8**;

FIG. **10** is an exploded view of the hinge assembly of FIG. **8**;

FIG. **11** is a block diagram of one example of a portable computer user interface architecture, according to aspects of the invention;

FIG. **12** is a screen shot illustrating one example of a graphical user interface, according to aspects of the invention;

FIG. **13** is a screen shot illustrating another example of a graphical user interface according to aspects of the invention;

FIG. **14** is an illustration of a user adjusting the scroll wheel on a portable computer in the easel mode, according to aspects of the invention;

FIG. **15** is an illustration of a user pressing the scroll wheel on a portable computer, according to aspects of the invention;

FIG. **16** is an illustration of a user pressing a navigation button on the portable computer, according to aspects of the invention;

FIG. **17** is an illustration of an example of the portable computer in the laptop mode, according to aspects of the invention;

FIG. **18** is a view of a portion of the portable computer illustrating a wireless signal indicator feature, according to aspects of the invention;

FIG. **19** is a view of a portion of the portable computer in the closed position, according to aspects of the invention;

FIG. **20** is a plan view of one example of a power adaptor, according to aspects of the invention;

FIG. **21** is a side view of the power adaptor of FIG. **20**;

FIG. **22**A is another side view of the power adaptor of FIG. **20**, illustrating the power cord would around a cord spool, according to aspects of the invention;

FIG. **22**B is a plan view of the power adaptor of FIG. **22**A

FIG. **23** is an illustration of the portable computer coupled to a docking station, according to aspects of the invention;

FIG. **24** is an illustration of the portable computer showing one example of a docking connector, according to aspects of the invention;

FIG. **24** is an illustration of a hinge assembly coupled to a computer frame, according to aspects of the invention;

FIG. **26** is an illustration of the portable computer configured into a "frame" mode, according to aspects of the invention; and

FIG. **27** is an illustration of the portable computer configured into a "flat" mode, according to aspects of the invention.

DETAILED DESCRIPTION

Aspects and embodiments are directed to a portable computer that is configurable between different operating modes, including a laptop mode (in which the portable computer has a conventional laptop appearance), a flat mode, a frame mode, and an easel mode in which the base of the computer and its display component stand vertically forming an inverted "V," as discussed further below. The portable computer is capable of different display formats and functionality in the different modes, and includes a graphical user interface that may work seamlessly with the computer hardware to provide a unified, comfortable, holistic user experience. In particular, the portable computer may provide access to a wide array of functions, both those traditionally provided by computing devices and those traditionally provided by other passive information devices. For example, the hardware and software, including the graphical user interface, of the portable computer may be focused toward providing access to entertainment media, such as audio and video (e.g., playing music, streaming video, viewing photographs, etc.), email, and internet, while also providing state-of-the-art computer processing capability.

It is to be appreciated that embodiments of the methods and apparatuses discussed herein are not limited in application to the details of construction and the arrangement of components set forth in the following description or illustrated in the accompanying drawings. The methods and apparatuses are capable of implementation in other embodiments and of being practiced or of being carried out in various ways. Examples of specific implementations are provided herein for illustrative purposes only and are not intended to be limiting. In particular, acts, elements and features discussed in connection with any one or more embodiments are not intended to be excluded from a similar role in any other embodiments. Also, the phraseology and terminology used herein is for the purpose of description and should not be regarded as limiting. Any references to embodiments or elements or acts of the systems and methods herein referred to in the singular may also embrace embodiments including a plurality of these elements, and any references in plural to any embodiment or element or act herein may also embrace embodiments including only a single element. References in the singular or plural form are not intended to limit the presently disclosed systems or methods, their components, acts, or elements. The use herein of "including," "comprising," "having," "containing," "involving," and variations thereof is meant to encompass the items listed thereafter and equivalents thereof as well as additional items. References to "or" may be construed as inclusive so that any terms described using "or" may indicate any of a single, more than one, and all of the described terms.

Referring to FIG. **1**, there is illustrated one example of a portable computer according to aspects of the invention. In FIG. **1**, the portable computer **100** is illustrated in the "laptop" mode, with the display component **102** inclined at a viewing angle from the base **104**. The display component **102** is pivotably coupled to the base **104** by a hinge assembly (not shown) that allows the display component to be rotated with respect to the base. The hinge assembly may include a single or multiple hinges, which may be any of a variety of hinge types, including, but not limited, to single-axis hinges, multiple-axis hinges, geared hinges, etc. In one example, the hinge assembly allows the display component **102** to be rotated (or tilted) about a longitudinal axis **101** running along an interface between the display component and the base **104**, as illustrated in FIG. **1** and discussed further below. The base **104** includes a keyboard **106** and internal electronic components (not shown), such as a central processing unit, memory, and other components necessary to operate the portable computer, as known to those skilled in the art. In some embodiments, the base **104** may also include

a touch pad **108** or trackball (not shown) for receiving user commands, as known to those skilled in the art.

Still referring to FIG. **1**, the display component **102** includes a display screen **110**, and may also include a camera **112**, microphone **114**, and infrared receiver **116**, as discussed further below. It is to be appreciated that the locations of the camera **112**, microphone **114** and infrared receiver **114** are not limited to the example illustrated in FIG. **1**, and may be placed in other locations on the display component **102** and/or base **104**, as would be recognized by those skilled in the art. The display component **102** may also include cushions **118** that provide soft contact points between the base **104** and the display component **102** when the portable computer is closed. In one example, the cushions **118** are made of rubber. However, it is to be appreciated that the invention is not so limited, and the cushions **118** may comprise materials other than rubber, including, for example, a polymer, felt, or other suitable materials as would be recognized by those skilled in the art.

Referring to FIG. **2**, there is illustrated a side view of the portable computer **100** of FIG. **1** in the closed configuration. As is the case for conventional clam-shell type portable computers, when the portable computer **100** is closed, the display screen is disposed "face down" against the keyboard of the base **104**. In the illustrated embodiment, the base **104** includes a rounded portion **120** that houses the hinge (not shown) that pivotably couples the display component **102** to the base, as discussed further below. It is to be appreciated that the rounded portion **120** is not limited to having a round shape, but may instead have another shape, which may be dependent on the type of hinge used. In one embodiment, a power button **122**, configured to turn the portable computer ON and OFF, may also be provided on the rounded portion **120**, as illustrated in FIG. **2**. However, it is to be appreciated that the invention is not so limited, and the power button **122** may be located elsewhere on the base **104**. In one example, the power button **122** may be slightly recessed relative to the surface of the base **104**, so as decrease the potential for the power button to be accidentally pressed.

An exterior view of the bottom of the base **104** (the underside of the portable computer **100**) is illustrated in FIG. **3**. As can be seen in FIG. **3**, in one embodiment, the base **104** includes a plurality of feet **124**. In one example, the feet **124** are made of rubber; however, it is to be appreciated that the invention is not so limited and the feet may be made of another material, such as, for example, a polymer or felt. A ventilation slit **126** may be provided near an interface between the base **104** and the display component **102**, as illustrated, or elsewhere as may be desired, to allow heat to dissipate from the internal electronic components in the base. The base **104** may also include one or more speakers **128**. In one example, the base **104** includes two stereo speakers **128**, positioned at either side of the base, as illustrated in FIG. **3**; however, it is to be appreciated that the portable computer **100** may comprise more or fewer speakers which may be placed at any location on the base **104**. A scroll wheel **132** may be provided to allow a user to control certain functionality of the portable computer **100**, such as navigating web pages, controlling speaker volume, selecting programs, etc., as discussed further below.

According to one embodiment, the base **104** may comprise a cushioning strip **130** disposed along an edge of the base **104** opposite to the interface between the display component **102** and the base, as illustrated in FIG. **3**. The cushioning strip **130**, which may comprise rubber, a polymer, or another suitable material, may serve as a "foot" when the portable computer is configured into the easel mode, as discussed further below. In one embodiment, the display component **102** may be provided with a similar cushioning strip that may serve as a second supporting foot when the portable computer is configured into the easel mode.

Referring to FIG. **4**, there is illustrated an example of the portable computer **100** configured into the easel mode. To convert the portable computer **100** from the laptop mode (or closed position) into the easel mode, the display component **102** may be folded away from the base **104**, in the same direction as to open the computer (i.e., to configure the computer from the closed position into the laptop mode) such that the base **104** and the display component **102** form an inverted "V" shape with the bottom of the base and the back of the display component face another, as illustrated in FIG. **4**. In the easel mode, the display screen **110** is visible and accessible on one side of the portable computer **100** and the keyboard **106** (not shown in FIG. **4**) is visible and accessible on the other side.

As illustrated in FIG. **4**, in one embodiment, the portable computer may comprise integrated hardware volume controls, including a volume control button **204** and a mute button **206**. In one example, the volume control button **204** may be a rocker switch that allows a user to easily increase or decrease the volume of audio played through the speakers **128**. When the user presses the volume control button **204**, a volume indicator may temporarily appear on the display screen **110**, to provide a visual indication of the amount by which the volume is being increased or decreased. Similarly, pressing the mute button **206** may cause a visual indication that the volume is muted to appear on the display screen **110**.

According to one embodiment, when the portable computer **100** is configured into the easel mode, the visual display on the display screen **110** is automatically rotated 180 degrees such that the information appears "right-way-up," even through the display screen is upside-down compared to when the portable computer is in the laptop mode. Thus, a user may simply "flip" the portable computer **100** into the easel mode and immediately be able to comfortably view information on the display screen **110**, without having to access display screen controls to adjust the orientation of the visual display. In one embodiment, the portable computer **100** includes an orientation (or mode) sensor that is configured to detect whether the portable computer is in the laptop mode or the easel mode, and to adjust the display accordingly. The orientation sensor may be incorporated into the base component **104**, for example, underneath the keyboard **106**, or into the display component. In one example, locating the orientation sensor in the display component **102**, rather than the base **104**, may provide more robust detection and therefore, may be presently preferred in some embodiments. The orientation sensor may be used to determine a precise relative orientation of the base component **104** with respect to the display component **102**, or vice versa, for example, to determine whether the device is in the laptop mode, easel mode, or some point in between the two modes. In one example, the orientation sensor includes an accelerometer whose output is fed to the computer operating system (or to dedicated logic circuitry) which then triggers a display inversion as appropriate.

Accelerometers have been used in portable devices such as cellular phones, media players or computers, as sudden motion sensors, or "drop detectors," to protect against hard drive crashes in the event that the device is dropped. By contrast, however, the accelerometer in the portable computer according to an embodiment of the invention is not used to detect motion of the overall computer, but rather to detect a configuration of the portable computer **100** (e.g.,

laptop mode or easel mode), particularly, to detect an orientation of the display component **102** relative to the base component **104**. In one example, information from the accelerometer is provided to a display controller in the portable computer and used to switch the display between portrait or landscape mode, as is done in some conventional devices.

Referring to FIG. **5**, when the portable computer **100** is in the easel mode, the base **104** is disposed at an angle **134** to the display component **102**. This angle **134** is adjustable, for example, to allow a comfortable viewing angle to the display screen **110** to be maintained for different positions of a user **136** and of the portable computer **100**, as illustrated in FIGS. **6**A, **6**B and **6**C. For example, when the user **136** is further from the portable computer, the angle **134***a* (FIG. **6**A) may be made smaller than the angle **134***b* when the user is closer to the portable computer (FIG. **6**B). As discussed above, in one example, the orientation sensor (not shown) may be used to detect, either approximately or precisely, the angle **134** and to provide the information to the computer operating system.

According to one embodiment, the display component **102** is pivotably coupled to the base **104** by a hinge that allows the display component to be moved relative to the base so as to allow the portable computer **100** to be configured into the closed position, the laptop mode or the easel mode. As discussed above, in conventional "clamshell" type portable computers, the hinges that couple the display component to the base generally do not permit more than about 180 degrees of rotation of the display component. Thus, these conventional portable computers can be in a closed position or open, laptop configuration, but cannot be configured into an easel mode because the conventional hinges do not permit sufficient movement of the display component. Similarly, the tablet-type portable computers discussed above have displays that can be opened, rotated and folded such that they lie flat against the keyboard on the base, but cannot be configured into an easel mode. Although, as discussed above, U.S. Pat. No. 6,266,236 discloses a computer that is configurable into a presentation mode, this requires a complex arm assembly. By contrast, the portable computer according to embodiments of the present invention may be configured into the easel mode by simply continuing to tilt or rotate the display component past the "laptop positions" until a desired easel angle **134** is reached.

Referring to FIGS. **7**A and **7**B, there is illustrated a portion of the portable computer **100** illustrating a hinge assembly **138** that allows the portable computer to be configured into either the laptop mode (FIG. **7**A) or the easel mode (FIG. **7**B), according to aspects of the invention. According to one embodiment, the hinge assembly **138** accommodates 0-320 degrees of rotation, allowing a minimum angle **134** (see FIG. **5**) of 40 degrees. However, it is to be appreciated that the hinge assembly **138** may allow greater or fewer degrees of rotation, provided only that sufficient rotation is allowed so as to configure the portable computer **100** into either the laptop mode or the easel mode. As discussed above, in one embodiment the portable computer **100** includes an orientation sensor (not shown) that is configured to detect a relative orientation of the display component **102** and the base component **104**. In one example, the orientation sensor may be an accelerometer incorporated into the base component **104**, as discussed above. Alternatively, the orientation sensor may be incorporated into the hinge assembly **138** and may be used to detect movement of the hinge assembly, and to translate that movement into an information about the relative orientation of the display component **102** and the base component **104** (for example, a size of the angle **134**). It is also to be appreciated that the orientation sensor may include electronic or mechanical components, or a combination thereof. For example, the hinge assembly may be provide with detents that provide an indication of the mode of the portable computer.

As discussed above, and also illustrated in FIGS. **7**A and **7**B, the portable computer may also comprise a scroll wheel **132** that allows a user to adjust, control and/or select various aspects of the portable computer (e.g., wireless capability or speaker volume) or items displayed on the display screen **110**. A housing **160** may contain or support various mechanical and/or electronic components (not shown) that are coupled to the scroll wheel **132** and are configured to convert physical movement of the scroll wheel into electrical signals. These electrical signals may be provided to the central processing unit of the portable computer **100** which processes the electrical signals so as to translate movement of the scroll wheel into control of a selected feature, for example, adjusting the volume of the speaker(s) or selecting a particular item displayed on the display screen, as discussed further below.

One embodiment of the hinge assembly **138** is illustrated in FIG. **8**. The hinge assembly includes a bracket **140** rotatably coupled to a housing **142**. The housing **142** may include a first flange **144** that may be fastened to an internal frame in the base **104**, as illustrated in FIG. **7**A. The first flange **144** may include holes **146** to allow the first flange to be fastened to the base **104** using fasteners, such as, for example, screws, rivets or bolts. The bracket **140** may include a second flange **148** that may be similarly coupled to the display component **102** using fasteners **150**. In one embodiment, the display screen **110** (see FIG. **1**) may be an LCD screen. As known to those skilled in the art, an LCD screen generally comprises a frame and plastic housing. In one example, the second flange **148** may be fastened to either or both of the display screen frame and the screen's plastic housing. Referring to FIG. **25**, there is illustrated an example of two hinge assemblies **138** coupled to the display frame **208** of the display component, and to the base frame **210** of the base component **104**. According to one embodiment, the bracket **140** and/or housing **142** may be formed of cast zinc. However, it is to be appreciated that other materials, including other metals, may be used, and the bracket **140** and/or housing **142** may be formed using a procedure other than casting, such as, for example, machining or molding.

Referring again to FIG. **8**, in one embodiment, the hinge assembly **138** may also incorporate an area **152** for locating the power button (FIG. **2**, **122**) or a navigation control button (FIG. **4**, **166**), as discussed further below.

Referring to FIG. **9**, there is illustrated a cross-sectional view of a portion of the hinge assembly **138** taken along line A-A in FIG. **8**. As shown in FIG. **9**, in one embodiment the hinge assembly **138** comprises a shaft **154** located within the hinge housing **142**. The shaft **154** may be held in position within the hinge housing **142**, and rotatably coupled to the housing, by torsion elements, such as springs **156**. In one example, the springs **156** may be formed by stamping; however, it is to be appreciated that other methods of manufacture may be used. In one example, the hinge assembly may accommodate about 320 degrees of rotation, as discussed above, and may provide about 6.5 in-lbs in symmetric torque.

FIG. **10** is an exploded view of the hinge assembly of FIGS. **8** and **9**. As shown in FIG. **10**, the shaft **154** is coupled

to a member **158**. This member **158** may be integral with or coupled to the bracket **140** which is, in turn, fastened to the display component, as discussed above. Thus, the shaft **154** and springs **156** provide a rotatable coupling between the fixed elements of the hinge assembly, namely, the hinge housing **142** and bracket **140** which are fastened to the base **104** and display component **102** of the portable computer. In this manner, the hinge assembly allows the display component **102** to be moved relative to the base **104**, thereby allowing the portable computer to be easily and quickly configured into any of the closed position, laptop mode or easel mode. For example, simply rotating or tilting the display component about the longitudinal axis **101** (see FIG. **1**) up to approximately 180 degrees from the closed mode configures the portable computer into the laptop mode, and rotating the display component about the longitudinal axis **101** beyond approximately 180 degrees axis from the closed mode configures the portable computer into the easel mode.

According to one embodiment, the portable computer may include integrated "navigation" hardware that allows a user to easily and comfortable control various features and functions of the portable computer, and to manipulate content displayed on the portable computer. For example, as discussed above, the portable computer **100** may comprise a scroll wheel **132** that allows a user to control, adjust and/or select various functionality of the portable computer. According to another embodiment, the scroll wheel **132** may be used to provide "hardware navigation" through information, such as menus, icons, etc., displayed on the display screen **110**, as discussed further below with reference to FIG. **17**. A common display configuration used in conventional computers is a "desktop" view in which multiple icons representing links to various programs or applications are displayed over a background image. Navigation is conventionally performed using a mouse, touch pad or trackball, as known to those skilled in the art. In one embodiment, the portable computer **100** may display information on the display screen **110** in the conventional desktop configuration, and navigation may be performed using either conventional tools, such as a touchpad **108**, trackball (not shown) or peripheral, for example, a mouse, that is connected to the portable computer **100** via a port **164**, or the scroll wheel **132**, or a combination thereof. According to another embodiment, the portable computer **100** includes a streamlined graphical user interface that supports "map" navigation. The map user interface provides a clear overview of the entire computing environment and searching capability within the environment that may be accessed using the scroll wheel **132** and, optionally, one or navigation buttons **166**, **168** that may be provided on the base **104** of the portable computer **100** (button **166**) and/or in the keyboard **106** (button **168**), illustrated in FIG. **17**. In one embodiment, the map mode of navigation is a hierarchical mode that reduces the number of items to select amongst at any stage of navigation, thereby facilitating user access with the scroll wheel **132** and, optionally, the navigation button(s) **166**, **168**. Of course, it is to be appreciated that the map user interface may also be navigated using conventional tools, such as a trackball, touchpad, mouse or arrow keys.

Referring to FIG. **11**, there is illustrated a block diagram of one example of an architecture of the portable computer including a map user interface. The user interface "home" screen **170** that displays a plurality of modes of content **172**. In the illustrated example, the home screen **170** contains five modes of content **172**; however, it is to be appreciated that the home screen may include more or fewer than five modes of content and that the modes of content may differ from the examples discussed below. According to one example, the modes of content **172** accessible via the home screen **170** may include "media" **172***a*, "connect" **172***b*, "web" **172***c*, "applications" **172***d*, and "channels" **172***e*. Using the map user interface, information, programs, features and applications may be grouped into the various modes of content **172**. By selecting any mode of content **172**, for example, by using the scroll wheel **132** and/or navigation buttons **166**, **168**, as discussed further below, the user may access the content organized within that mode. For example, the media mode **172***a* may provide access to a medial player to play, view, search and organize media such as music, video, photos, etc. The connect mode **172***b* may provide access to features such as, for example, email, voice-over-IP, instant messaging, etc., and the web mode **172***c* may provide access to internet browsing and searching. The application mode **172***d* may provide access to, for example, computer applications or programs, such as word processor, spreadsheet, calculator, etc. In one example, these applications or programs may be provided as web-based services rather than programs or applications residing on the portable computer **100**. The channels mode **172***e* may provide access to different functionality of the portable computer, with the different functions or features defined as different channels. For example, a channel may include an alarm clock channel in which the portable computer is configured to display a clock and can be programmed to activate an alarm, e.g., a sound, piece of music, etc., at a predetermined time. Another example of a channel may include a "photo frame" channel in which the portable computer may be configured to display a preselected image or set of images, etc. Another example of a channel is a "television" channel, in which the portable computer is configured to stream Internet television. In one example, a user may configure particular Internet television channels (e.g., a news channel, a movie channel, a home and garden channel, etc.) into sub-channels within the channels mode of content **172**(*e*). Some or all of the modes of content **172** may access, retrieve and/or store information on the Internet **174**.

According to one embodiment, the different modes of content **172** may be displayed as a series of bars across the display screen **110**, as illustrated in FIG. **12**. The following discussion of various features, including hardware navigation through the map user interface may refer primarily to the display configuration illustrated in FIG. **12**. However, it is to be appreciated that the invention is not so limited, and the modes of content may be displayed in other configurations, including, for example, a "desktop" and icon configuration, a "dashboard" type display, as illustrated in FIG. **13**, or another configuration, as would be recognized by those skilled in the art. Similarly, navigation is discussed below primarily with reference to the scroll wheel **132** and navigation buttons **166**, **168**; however, it is to be appreciation that navigation may also be accomplished using any of the conventional tools discussed above or known to those skilled in the art.

As discussed above, according to one embodiment, the scroll wheel **132** and, optionally, the navigation buttons **166**, **168** may be used to navigate the user interface. Referring again to FIG. **12**, scrolling the scroll wheel may sequentially highlight different ones of the modes of content **172**. In one example, the highlighting may be achieved by changing the color of the selected mode, and/or by providing a visual indicator, such as a colored bar **176**. A highlighted mode **172** may be selected by pressing the scroll wheel, thereby bringing up a new "page" or screen on the user interface corresponding to the selected mode. Once within a selected

mode of content **172**, the scroll wheel may similarly be used to select particular functions, features or applications within that mode. In one embodiment, the default action for the scroll wheel **132** may vary depending on whether the portable computer **100** is in the laptop mode or the easel mode. For example, in easel mode, the default action for the scroll wheel may be channel selection within the channels mode **172**(*e*).

As discussed above, in one embodiment volume control for the speakers **128** may be provided by the volume control button **204** and mute button **206**. Alternatively, according to another embodiment, volume control may be provided using the scroll wheel **132**. Thus, as a user scrolls the scroll wheel **132**, as illustrated in FIG. **14** by arrow **161**, a volume indicator may appear on the display screen **110**. In one example, the volume indicator may comprise a transparent, or partially transparent, box **162** containing volume level indicators that may appear directly below the scroll wheel **132** on the display screen **110**. In this example, as the user scrolls the scroll wheel **132**, different volume levels in the volume box **162** may be successively highlighted, to indicate to the user that the volume is increasing or decreasing.

In one embodiment, the scroll wheel **132** may be depressible as well as scrollable. Thus, pressing the scroll wheel **132**, as illustrated in FIG. **15**, may allow further control, such as, for example, selecting a channel onto which the user has scrolled, or "play" and "pause" of audio or video being played through the portable computer **100**.

As discussed above, according to one embodiment, one or more navigation buttons may be used in conjunction with the scroll wheel. In particular, in one embodiment, the navigation button(s) may be used to change the action of the scroll wheel. As discussed above, in one example, the default action of the scroll wheel is volume control. This action may be changed by pressing the navigation button **166**, as illustrated in FIG. **16**, for example, from volume control to menu navigation in the user interface, and vice versa. According to one embodiment, the effect of pressing the navigation button **166** may vary depending on active the mode of content of the portable computer **100**. For example, if a user is in the media mode using a photo viewing application, pressing the navigation button **166** may change the action of the scroll wheel **132** from mode navigation to slideshow controls for the photos. When the navigation button **166** is pressed, an control indicator box (similar to the volume indicator box **162** discussed above with reference to FIG. **14**) may appear containing different actions for the photo slideshow, such as "play," "next," "back," "skip," "full screen view," etc., and scrolling the scroll wheel **132** may allow a user to select one of these actions. Pressing the navigation button **166** again may return the scroll wheel action to menu navigation, to allow the user to, for example, move to a different feature or application within the active mode, or to select a different mode.

As can be seen in FIG. **16**, the navigation button **166** may be easily accessed when the portable computer **100** is in the easel mode, providing a convenient navigation tool for this configuration. A similar navigation button **168** may be provided on the keyboard **106**, as illustrated in FIG. **17**. In one example, the functionality of the two navigation buttons **166**, **168** may be the same, with the different locations providing easy, comfortable access in the different configuration modes (i.e., laptop or easel) of the portable computer **100**. Thus, a user may use either navigation button **166** or navigation button **168**, depending on personal preference. In another example, the two navigation buttons may have different functionality. For example, the navigation button **166** may be used to alter the action of the scroll wheel **132**, as discussed above, while the navigation button **168** is used to navigate "up" or "down" a level within the map user interface. For example, pressing the navigation button **168** while within a given mode of content may allow the user to "back up" to the home screen; or pressing the navigation button **168** while within a selected channel (in the channel mode of the content **172***e*) may allow the user to "back-up" to the channel mode main page.

It is to be appreciated that numerous variations on the functionality of the navigation buttons **166**, **168** is possible, as would be recognized by those skilled in the art, and the above examples are given for illustration only and are not intended to be limiting. In addition, any functions described with reference to one navigation button (**166** or **168**) may be instead (or additionally) implemented with the other navigation button. In one example, the function of the navigation buttons **166**, **168** may vary depending on whether the portable computer **100** is configured into the laptop mode or the easel mode. For example, only the navigation button **166** may be active in the easel mode, and only the navigation button **168** may be active in the laptop mode. Alternatively, both navigation buttons **166**, **168** may be usable in either the laptop mode or the easel mode, but their functionality may vary. For example, when the portable computer **100** is in the easel mode, the default action for the navigation button **166** may be channel selection whereas the default action for the navigation button **168** is to access the "home" screen. Furthermore, the portable computer **100** is not limited to the use of two navigation buttons and may instead comprise only a single navigation button or more than two navigation buttons, any of which may be disposed in the locations described above (e.g., on the rounded portion **120** of the base **104** or on the keyboard **106**), or in other locations on the portable computer.

As discussed above, according to one embodiment, the function or display content and/or display orientation of the portable computer may vary when the portable computer is configured from the laptop mode into the easel mode, or vice versa. For example, as discussed above, when the portable computer **100** is configured into the easel mode, the visual display on the display screen **110** is automatically rotated 180 degrees such that the information appears "right-way-up," even through the display screen is upside-down compared to when the portable computer is in the laptop mode. In another example, for at least some activities within at least some modes of content (e.g., viewing a photograph or video), when the portable computer **100** is configured into the easel mode, the display may automatically adjust to "full screen view" (i.e., the displayed image or video is displayed on the full screen size, rather than in a window) to allow for comfortable viewing.

In addition, as discussed above, the ability to configure the portable computer **100** into either the laptop mode or the easel mode provides enhanced functionality. For example, when the portable computer **100** is not being actively used, the user may configure the portable computer into the easel mode, and program the portable computer to act as a digital photo frame, displaying one or more photos of the user's choice. In the easel mode, the portable computer **100** may occupy a smaller footprint on a surface than in the laptop or closed modes because the base **104** and display component **102** are upright, as illustrated in FIGS. **4** and **5**. In addition, because the portable computer can act as a passive information and/or entertainment device, such as a photo frame or clock, as discussed above, the portable computer may

provide a useful function even when not being actively used by the user, and may do so (in the easel mode) without taking up much surface area.

According to another embodiment, the portable computer **100** may further comprise a wireless signal indicator **178**, as illustrated in FIG. **18**. The wireless signal indicator **178** may indicate the availability and/or strength of a wireless signal to which the portable computer **100** is connected, or is attempting to connect to. In one example, the color of the wireless signal indicator **178** may provide information regarding the strength of a detected wireless signal. For example, green may indicate a "good" signal; yellow may indicate a "poor" or "low" signal; and red may indicate that there is no signal available. In one example, the wireless signal indicator **178** may be ON or active whenever the portable computer **100** is powered up. Alternatively, the wireless signal indicator **178** may be activated by a user action, for example, by pressing the navigation button **166** or another button or key provided on the portable computer **100**, and may remain active for a predetermined time period (e.g., for 2 seconds, 10 seconds, one minute, etc.). As discussed above, the functionality of the navigation button **166** may vary depending on the configuration mode of the portable computer **100**. In one example, when the portable computer **100** is in the closed position, but still powered up, the default action for the navigation button **166** may be to activate the wireless signal indicator **178**.

According to one embodiment, the portable computer **100** may be provided with power cord and adapter to allow the portable computer to be plugged into a wall supply. Referring to FIG. **19**, there is illustrated a view of a portion of the portable computer **100**, showing a power jack **180** to which the power adaptor can be connected. As discussed above, the portable computer **100** may also include a port **164** to which peripheral devices, such as mouse, external keyboard, portable flash drive, memory stick, etc. may be connected. In one example, the port **164** is a USB port; however, it is to be appreciated that the port may accommodate protocols other than USB. In addition, although only one port **164** is illustrated in FIG. **19**, the portable computer **100** may comprise multiple ports that may accommodate multiple protocols. In one example, the portable computer **100** may also comprise a headphone jack **182**. It is to be appreciated that the location of any or all of the power jack **180**, port(s) **164**, and headphone jack **182** are not limited to the example shown in FIG. **19**, but may be anywhere convenient or desirable on the portable computer **100**.

Referring to FIG. **20**, there is illustrated a top down view one example of a power adaptor **184** that may be used with the portable computer **100** and connected via the power jack **180**. As known to those skilled in the art, the power adaptor **184** comprises a transformer (not shown) that converts the wall power to a level acceptable for use by the portable computer **100**. In one embodiment, the power adaptor **184** comprises a substantially round body **186** that houses the transformer and other necessary components. A connector **188** may allow the power adaptor **184** to be connected to a wall outlet or extension cord. In one example, the connector **188** may include foldable prongs **190** that can be folded against the connector **188** for storage, and folded out for connection, as illustrated in FIG. **21**. A cord **192** may be slidably accommodated within the body **186**, such that the cord may be stored within the body and flexibly extended (up to its maximum length) by a user.

According to one embodiment, the cord **192** may be wound around a cord spool **194** located within, or partially within, the body **186** of the power adaptor **184**. As illustrated in FIG. **21**, the cord spool **194** may be configured to slide out from the body **186** of the power adaptor **184**, such that the cord **192** can be wound around the cord spool **194**, as illustrated in FIGS. **22**A and **22**B.

According to another embodiment, the portable computer **100** may be configured to connect to a docking station **196**, as illustrated in FIG. **23**. In one embodiment, a connector **198** on the docking station **196** may be configured to slidably connect to connectors **200** on the portable computer **100**, as illustrated in FIG. **23**. In one example, the connectors **200** may include power and audio connectors, such that the portable computer **100** may receive power from the docking station and receive and/or provide audio signals from/to the docking station, respectively. For example, the docking station may be coupled to external speakers, and the portable computer may provide audio signals to the docking station to be played through the external speakers. In another example, the docking station **196** may also be coupled to an audio device (not shown), such as an MP3 player, which may provide audio signals and data to the portable computer **100**, for example, to update an audio library on the portable computer. It is to be appreciated that many other variations of communication between the portable computer **100** and devices coupled to the docking station **196** are possible, as would be recognized by those skilled in the art, and such variations are intended to be within the scope of this disclosure. Furthermore, numerous variations on the connector(s) **198**, **200** that couple the docking station **196** to the portable computer **100** are also possible, as would be recognized by those skilled in the art. For example, the portable computer **100** may include a multi-pin connector **202** located on the base **104**, as illustrated in FIG. **24**. Such and other variations are intended to be within the scope of this disclosure and the above-mentioned examples are provided for illustration only and are not intended to be limiting.

In addition, it is to be appreciated that although the above discussion refers primarily to the portable computer **100** being in either the laptop mode or easel mode, other modes or configurations are also possible. For example, as discussed above, because the portable computer **100** can be configured from the closed position, through the laptop mode into the easel mode by rotating the display component **102**, a number of configurations are possible in between "true" laptop mode and "true" easel mode. In another example, the portable computer **100** may be configured into a "frame" mode, as illustrated in FIG. **26**, in which the portable computer is placed on a surface **212** with the keyboard **106** "face down" on the surface **212** and the display **110** facing upward. In the frame mode, the display component **102** may be at a similar orientation, and angle **134**, with respect to the base component **104** as in the easel mode. However, rather than the base component **104** and display component **102** being oriented vertically with respect to the surface **212**, as in the easel mode (in which the portable computer forms an inverted "V" as discussed above), in the frame mode, the base component **104** may lie flat on the surface **212**, as shown in FIG. **26**. In one example, software and/or hardware protection may be provided for the keyboard to prevent keys from being pressed (or to prevent the portable computer from responding to pressed keys) when the portable computer is in the frame mode.

Similarly, referring to FIG. **27**, there is illustrated another configuration of the portable computer **100**, referring to as the "flat" mode. In the flat mode, the display component **102** may be rotated (or opened) to approximately 180 degrees with respect to the base component **104**, such that the base component and display component lay flat on a surface, with

the keyboard **106** and display screen **110** exposed, as shown in FIG. **27**. Unlike the easel and frame modes, in which the keyboard may be concealed and not easily accessible, in the flat mode, the keyboard is accessible and usable. In addition, as discussed above, the visual display on the display screen **110** may be automatically rotated to accommodate comfortable viewing of information by persons located in different positions relative to the base component **104** or display component **102**. The visual display on the display screen **110** may also be manually adjusted by a user using, for example, the keyboard **106**, touch pad **108** or mouse (not shown), scroll wheel **132** or navigation buttons (not shown). For example, if a user (located at position A) wishes to display information for a person located opposite the user (at position B), the visual display may be rotated (automatically or manually) 180 degrees such that the information appears "right-way-up," to the person at location B, even through the display screen **110** is upside-down for that person. Similarly, in another example, the visual display may be rotated (automatically or manually) 90 degrees such that the information appears "right-way-up," for a person at location C. In one example, a user can "toggle" the visual display among various orientations. For example, a user at location A may have the visual display facing themselves while using the keyboard **106** or other controls to change or access information on the display, then toggle the display orientation 180 or 90 degrees to display the information for persons at locations B or C.

In summary, various aspects and embodiments provide a portable computer that is configurable between different operating modes, including a laptop mode and an easel mode, and that is capable of different display formats and functionality in the different modes. The ability to view and operate the portable computer in the different laptop and easel modes, and to incorporate features and functions such as an alarm clock, digital photograph frame, voice-over-IP, etc, may provide enhanced flexibility and usefulness. In addition, the portable computer may include a graphical user interface that may work seamlessly with the computer hardware to provide an enjoyable, holistic user experience.

Having thus described several aspects of at least one embodiment, it is to be appreciated various alterations, modifications, and improvements will readily occur to those skilled in the art. For example functionality or features that have been described herein in connection with hardware may instead be implemented in software, or vice versa. For example, the wireless signal indicator discussed above may instead (or in addition) be provided as a software application. Such alterations, modifications, and improvements are intended to be part of this disclosure and are intended to be within the scope of the invention. Accordingly, the foregoing description and drawings are by way of example only.

What is claimed is:

1. A portable computer configurable between a plurality of display modes including at least a laptop mode, a frame mode, and an easel mode, the portable computer comprising:

a display component;

a base;

an accelerometer configured to generate orientation information indicative of a current display mode among the plurality of display modes of the portable computer;

a display manager configured to display computer content on the display component and vary the computer content displayed responsive to the orientation information indicating a transition between at least the laptop and easel modes, wherein the display manager is further configured to enlarge the computer content displayed on the display component responsive to a transition from the laptop mode to the easel mode;

an interface between the display component and the base defining a longitudinal axis running along the display component and the base about which the display component and the base are rotatable;

wherein the interface is constructed and arranged such that rotating either the display component or the base about the longitudinal axis up to approximately 180 degrees from a closed mode configures the portable computer into the laptop mode, wherein in the laptop mode the display component is oriented towards an operator and a keyboard disposed within the base is oriented to receive input from the operator;

wherein the interface is constructed and arranged such that rotating either the display component or the base about the longitudinal axis beyond approximately 270 degrees from the closed mode transitions the portable computer for viewing in the frame mode or the easel mode, wherein during operation in the frame mode the display component is positioned toward the operator, the base contacts a substantially horizontal surface, and the keyboard is directed towards the substantially horizontal surface, and wherein during operation in the easel mode the display component is oriented facing the operator with the keyboard oriented away from the operator; and

wherein the portable computer is configured to detect a transition to at least the easel mode and the frame mode based on the orientation information, automatically determine a display orientation of content, and disable the keyboard when the portable computer is in the frame mode.

2. The portable computer of claim **1**, wherein the display component is rotatable about the longitudinal axis up to approximately 320 degrees from the closed mode.

3. The portable computer of claim **1**, further comprising:

a display orientation module that displays content on the display screen in one of a plurality of content orientations relative to the longitudinal axis;

a mode sensor which incorporates the accelerometer and detects the current display mode of the portable computer based on the orientation information; and

wherein the display orientation module displays content on the display screen in the one of the plurality of content orientations dependent on the current display mode detected by the mode sensor.

4. The portable computer of claim **1**, wherein the base and the display are only rotatable with respect to each other at the interface.

5. The portable computer of claim **1**, wherein the interface further comprises a multiple axis hinge.

6. The portable computer of claim **5**, wherein the interface further comprises multiple hinges.

7. The portable computer of claim **1**, wherein the interface defines a single longitudinal axis.

8. The portable computer of claim **1**, wherein the interface includes a hinge assembly, wherein the hinge assembly is at least partially housed within one of the base and the display component.

9. The portable computer of claim **1**, wherein the interface comprises means for rotating the display component along the longitudinal axis relative to the base to transition the portable computer for viewing in the frame mode.

10. The portable computer of claim **1**, wherein the interface comprises a plurality of axles.

11. The portable computer of claim **1**, further comprising at least one integrated navigation hardware control, wherein at least one of the at least one integrated navigation hardware control is accessible in at least the laptop and frame modes, and wherein the integrated navigation hardware can be operated by a user to control features and manipulate content displayed on the portable computer, including in any mode wherein the keyboard is inaccessible or oriented away from the user.

12. A portable computer configurable between a plurality of operating display modes, the portable computer comprising:

a display component including a single display screen for viewing content;

a base;

an accelerometer configured to generate orientation information indicative of a current display mode among the plurality of display modes of the portable computer;

a display manager configured to display computer content on the display component and vary the computer content displayed responsive to the orientation information indicating a transition between at least two operating display modes of the plurality of operating display modes, wherein the display manager is further configured to enlarge the computer content displayed on the display component responsive to a transition from a first operating display mode of the plurality of operating display modes to a second operating display mode of the plurality of operating display modes;

an interface connecting the display component and the base, defining a longitudinal axis running along the display component and the base about which the display component and the base are rotatable;

wherein the interface is constructed and arranged so that the display component and the base are rotatable with respect to each other about the longitudinal axis;

wherein the interface is constructed and arranged so that rotating either the display component or the base about the longitudinal axis from a closed mode to a first position configures the portable computer into the first operating display mode of the plurality of operating display modes, wherein in the first operating display mode the display component is oriented towards an operator of the portable computer, and the base is disposed on an opposite side of the display, wherein at least a portion of the base is configured to support the display in position when in the first operating display mode;

wherein the interface is constructed and arranged so that reorienting the portable computer while the display component and the base are in the first position configures the portable computer into the second operating display mode of the plurality of operating display modes, wherein in the second operating display mode the display component is oriented towards an operator of the portable computer, the base lies flat on a substantially horizontal surface, and a keyboard of the base is disabled and disposed towards the substantially horizontal surface, wherein at least a portion of the base is configured to support the portable computer in position when in the second operating display mode, a display orientation of content is automatically changed when transitioning between the first and second operating display modes.

13. The portable computer of claim **12**, wherein the first operating display mode is configured so that at least a portion of display component and at least a portion of the base define an inverted v configuration and wherein the second operating display mode is configured so that at least a portion of the display component and at least a portion of the base define a sideways v configuration.

14. The portable computer of claim **12**, wherein the interface comprises means for rotating the display component relative to the base.

15. The portable computer of claim **13**, wherein the interface is constructed and arranged to enable rotation of the base and the display component from a second position where the base and display component are disposed against each other to the first position where at least a portion of the base and the at least a portion of the display component are in a v configuration.

16. A method of managing user interaction with content displayed on a portable computer having a plurality of display modes, the portable computer comprising a display component including a display screen, a base including a keyboard, and an interface connecting the display component and the base defining a longitudinal axis, the method comprising:

rotating at least one of the display component and the base of the portable computer about the longitudinal axis to configure the portable computer in at least one of the plurality of display modes, wherein the longitudinal axis is configured to run along the connection between the display component and the base of the portable computer;

positioning at least a portion of the portable computer in a sideways v configuration for operation by a user, responsive to the act of rotating, wherein the act of positioning includes acts of:

positioning the display component in an orientation directed towards the user; and

positioning the base to lie flat on a surface and support the portable computer in the sideways v configuration;

generating, by an accelerometer, orientation information indicative of an orientation of the device;

determining a current display mode of the plurality of display modes based on the orientation of the device, including distinguishing between a first display mode and a second display mode of the plurality of display modes where either the display component or the base is rotated about the longitudinal axis beyond approximately 270 degrees from a closed state;

executing software protection configured to disable the keyboard when the portable computer is in the sideways v configuration; and

displaying computer content and varying the computer content displayed responsive to the orientation information indicating a transition between at least two display modes of the plurality of display modes, wherein the act of varying the computer content includes:

enlarging the computer content displayed on the display component responsive to detecting a transition from the first display mode to the second display mode.

17. The method of claim **16**, wherein the base includes a keyboard and the act of positioning the base on the opposite side of the display component includes positioning the keyboard such that the keyboard towards the surface.

18. A portable computer configurable between a plurality of display modes including at least a laptop mode, a frame mode, and an easel mode, the portable computer comprising:

a display component;

a base;

an accelerometer configured to generate orientation information indicative of a current mode of operation;

a display manager configured to display computer content on the display component and vary the computer content displayed responsive to the orientation information indicating a transition between at least the laptop and easel modes, wherein the display manager is further configured to enlarge the computer content displayed on the display component responsive to a transition from the laptop mode to the easel mode;

an interface between the display component and the base defining a longitudinal axis running along the display component and the base about which the display component and the base are rotatable;

wherein the interface is constructed and arranged such that rotating either the display component or the base about the longitudinal axis up to approximately 180 degrees from a closed mode configures the portable computer into a laptop mode, wherein in the laptop mode the display component is oriented towards an operator and a keyboard disposed within the base is oriented to receive input from the operator;

wherein the interface is constructed and arranged such that rotating either the display component or the base about the longitudinal axis beyond approximately 270 degrees from the closed mode transitions the portable computer for viewing in the frame mode or the easel mode, wherein during operation in the frame mode the display component is positioned toward the operator, the base contacts a substantially horizontal surface, and the keyboard is directed towards the substantially horizontal surface, and wherein during operation in the easel mode the display component is oriented facing the operator with the keyboard oriented away from the operator; and

wherein the portable computer is configured to detect a transition to at least one of the easel mode and the frame mode based on the orientation information, automatically determine a display orientation of content, and disable the keyboard in response to detecting the portable computer is in the frame mode.

19. The portable computer of claim **1**, wherein the portable computer further disables the keyboard in response to an orientation of the portable computer.

20. The portable computer of claim **1**, wherein the portable computer is further configured to connect to a docking station in the plurality of display modes, including the laptop mode and the frame mode.

21. The portable computer of claim **1**, further comprising a cushioning strip configured to stabilize the portable computer in a plurality of modes.

22. The portable computer of claim **11**, wherein the at least one integrated navigation hardware control includes a clickable scroll wheel configured to scroll along the longitudinal axis to select an item displayed by the display screen.

23. The portable computer of claim **1**, wherein the display component is further configured to display a segmented user interface comprising a plurality of modes of content.

24. The portable computer of claim **1**, wherein the display component and base include an overlapping portion such that responsive to rotation of display component and base, the display component contacts the base preventing further rotation, and the base directly supports the display in the frame mode configuration.

25. The portable computer of claim **3**, wherein the display module is configured to display content in a first orientation during the frame and laptop display modes of operation and display content in a second orientation during the easel display mode, the second orientation being rotated 180 degrees relative to the first orientation.

* * * * *

EXHIBIT D

US010289154B2

(12) **United States Patent**
Behar et al.

(10) **Patent No.: US 10,289,154 B2**
(45) **Date of Patent: *May 14, 2019**

(54) **PORTABLE COMPUTER WITH MULTIPLE DISPLAY CONFIGURATIONS**

(71) Applicant: **LiTL LLC**, Boston, MA (US)

(72) Inventors: **Yves Behar**, Oakland, CA (US); **Joshua Morenstein**, San Francisco, CA (US); **Christopher Hibmacronan**, Oakland, CA (US); **Naoya Edahiro**, San Francisco, CA (US); **Matthew David Day**, San Francisco, CA (US)

(73) Assignee: **LiTL LLC**, Boston, MA (US)

(*) Notice: Subject to any disclaimer, the term of this patent is extended or adjusted under 35 U.S.C. 154(b) by 0 days.

This patent is subject to a terminal disclaimer.

(21) Appl. No.: **15/896,201**

(22) Filed: **Feb. 14, 2018**

(65) **Prior Publication Data**

US 2018/0307271 A1 Oct. 25, 2018

Related U.S. Application Data

(63) Continuation of application No. 15/394,492, filed on Dec. 29, 2016, now Pat. No. 9,927,835, which is a (Continued)

(51) **Int. Cl.**

G06F 1/16	(2006.01)
G06F 3/0481	(2013.01)
G06F 3/0482	(2013.01)

(52) **U.S. Cl.**

CPC ..... ***G06F 1/1616*** (2013.01); ***G06F 1/1601*** (2013.01); ***G06F 1/162*** (2013.01); (Continued)

(58) **Field of Classification Search**

CPC G06F 1/1616; G06F 1/1618; G06F 1/162

See application file for complete search history.

(56) **References Cited**

U.S. PATENT DOCUMENTS

3,468,576	A	9/1969	Beyer et al.
4,939,514	A	7/1990	Miyazaki

(Continued)

FOREIGN PATENT DOCUMENTS

CN	1292112	A	4/2001
CN	1926496	A	3/2007

(Continued)

OTHER PUBLICATIONS

International Search Report and Written Opinion for International Application No. PCT/US2009/038599 dated Jun. 3, 2009.

(Continued)

Primary Examiner — Adrian S Wilson

(74) *Attorney, Agent, or Firm* — Wolf, Greenfield & Sacks, P.C.

(57) **ABSTRACT**

A portable computer that is configurable between a plurality of display modes including a laptop mode (in which the portable computer has a conventional laptop appearance) and an easel mode in which the base of the computer and its display component stand vertically forming an inverted "V." The portable computer includes a hinge assembly that couples the display component to the base of the computer, and allows the display component to be rotated about an axis along an interface between the display component and the base to configure the portable computer between a closed position, the laptop mode and the easel mode.

20 Claims, 25 Drawing Sheets

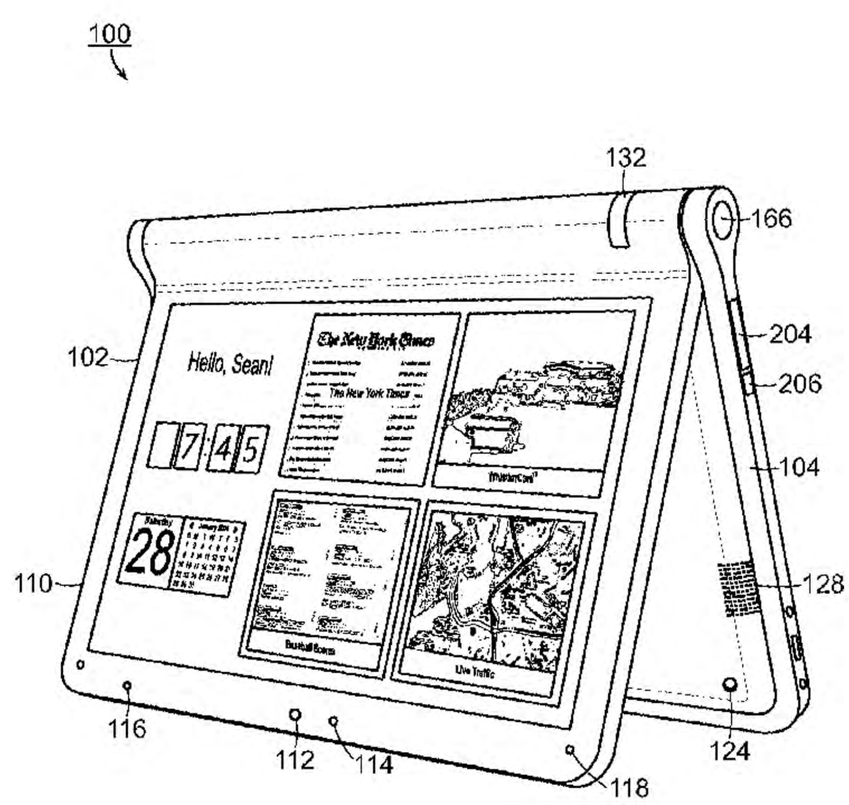

Related U.S. Application Data

continuation of application No. 13/651,636, filed on Oct. 15, 2012, now Pat. No. 9,563,229, which is a continuation of application No. 12/170,939, filed on Jul. 10, 2008, now Pat. No. 8,289,688, and a continuation of application No. 12/170,951, filed on Jul. 10, 2008, now Pat. No. 8,624,844.

(60) Provisional application No. 61/041,365, filed on Apr. 1, 2008.

(52) **U.S. Cl.**
CPC ***G06F 1/169*** (2013.01); ***G06F 1/1613*** (2013.01); ***G06F 1/1637*** (2013.01); ***G06F 1/1662*** (2013.01); ***G06F 1/1677*** (2013.01); ***G06F 1/1681*** (2013.01); ***G06F 3/0481*** (2013.01); ***G06F 3/0482*** (2013.01); ***G06F 3/04812*** (2013.01); *G06F 2200/1614* (2013.01)

(56) **References Cited**

U.S. PATENT DOCUMENTS

D333,636	S	3/1993	Issa
5,200,913	A	4/1993	Hawkins et al.
5,268,817	A	12/1993	Miyagawa et al.
5,436,954	A	7/1995	Nishiyama et al.
5,515,345	A	5/1996	Barreira et al.
5,547,698	A	8/1996	Lansbergen et al.
5,661,632	A	8/1997	Register
5,708,561	A	1/1998	Huilgol et al.
5,712,760	A	1/1998	Coulon et al.
D391,927	S	3/1998	Faranda et al.
D392,944	S	3/1998	Issa
D395,868	S	7/1998	Lino
5,790,371	A	8/1998	Latocha et al.
5,793,355	A	8/1998	Youens
5,796,575	A	8/1998	Podwalny et al.
D399,526	S	10/1998	Brady
5,825,352	A	10/1998	Bisset et al.
5,841,631	A	11/1998	Shin et al.
5,847,698	A	12/1998	Reavey et al.
5,900,848	A	5/1999	Haneda et al.
5,926,364	A	7/1999	Karidis
5,949,643	A	9/1999	Batio
D416,003	S	11/1999	Schiefer et al.
5,987,704	A	11/1999	Tang
6,005,767	A	12/1999	Ku et al.
6,067,224	A	5/2000	Nobuchi
6,094,191	A	7/2000	Watanabe et al.
6,097,389	A	8/2000	Morris et al.
6,137,468	A	10/2000	Martinez
6,144,358	A	11/2000	Narayanaswamy et al.
6,154,359	A	11/2000	Kamikakai et al.
6,222,507	B1	4/2001	Gouko
6,223,393	B1	5/2001	Knopf
6,262,885	B1	7/2001	Emma et al.
6,266,236	B1	7/2001	Ku et al.
6,275,376	B1	8/2001	Moon
6,295,038	B1	9/2001	Rebeske
6,302,612	B1	10/2001	Fowler et al.
6,323,846	B1	11/2001	Westerman et al.
D452,238	S	12/2001	Sugano et al.
6,327,482	B1	12/2001	Miyashita
6,341,061	B1	1/2002	Eisbach et al.
6,343,006	B1	1/2002	Moscovitch et al.
6,377,444	B1	4/2002	Price et al.
D462,069	S	8/2002	Gatto
6,437,974	B1	8/2002	Liu
D463,797	S	10/2002	Andre et al.
6,464,195	B1	10/2002	Hildebrandt
6,492,974	B1	12/2002	Nobuchi et al.
6,493,216	B1	12/2002	Lin
6,510,049	B2	1/2003	Rosen
D476,326	S	6/2003	Taniumura
6,597,384	B1	7/2003	Harrison
D479,708	S	9/2003	Hwang et al.
6,628,267	B2	9/2003	Karidis et al.
6,642,909	B1 *	11/2003	Oliva G06F 1/1618 345/1.1
6,659,516	B2	12/2003	Wang et al.
6,661,426	B1	12/2003	Jetha et al.
6,665,175	B1	12/2003	DeBoer et al.
6,693,652	B1	2/2004	Barrus et al.
6,697,055	B1	2/2004	Bullister
D491,177	S	6/2004	Andre et al.
D491,936	S	6/2004	Jao
D494,162	S	8/2004	Kondo
6,771,494	B2	8/2004	Shimano
D495,674	S	9/2004	Yoo et al.
D495,694	S	9/2004	Chase et al.
6,788,527	B2	9/2004	Doczy et al.
6,819,304	B2	11/2004	Branson
6,829,140	B2	12/2004	Shimano et al.
6,859,219	B1	2/2005	Sall
D504,128	S	4/2005	Maskatia
6,882,335	B2	4/2005	Saarinen
6,944,012	B2	9/2005	Doczy et al.
6,963,485	B2	11/2005	Hong
D512,997	S	12/2005	Lee et al.
6,972,752	B2	12/2005	Nako et al.
D513,509	S	1/2006	Kawa
D516,552	S	3/2006	Iseki
D517,541	S	3/2006	Maskatia
D518,042	S	3/2006	Kanayama
7,035,665	B2	4/2006	Kido et al.
D523,429	S	6/2006	Lin
7,061,472	B1	6/2006	Schweizer et al.
7,072,179	B1	7/2006	Curran et al.
D528,541	S	9/2006	Maskatia
D528,993	S	9/2006	Wilson
7,138,962	B2	11/2006	Koenig
7,148,877	B2	12/2006	Chang et al.
D534,531	S	1/2007	Ogasawara
D535,292	S	1/2007	Shi et al.
7,164,432	B1	1/2007	Amemiya
7,187,364	B2	3/2007	Duarte et al.
D544,846	S	6/2007	Kindle et al.
7,239,508	B2	7/2007	Ferrucei
7,250,207	B1	7/2007	Heal et al.
7,366,994	B2	4/2008	Loui
7,382,607	B2	6/2008	Skillman
7,428,142	B1	9/2008	Ligtenberg et al.
7,433,179	B2	10/2008	Hisano et al.
D581,371	S	11/2008	Richmond
7,467,356	B2	12/2008	Gettman et al.
7,522,946	B2	4/2009	Im
D593,085	S	5/2009	Behar et al.
D593,086	S	5/2009	Behar et al.
D593,091	S	5/2009	Behar et al.
D605,635	S	12/2009	Edahiro et al.
7,698,407	B2	4/2010	Mattox, Jr. et al.
7,756,928	B1	7/2010	Meenan et al.
7,814,425	B1	10/2010	O'Shaugnessy et al.
7,869,834	B2	1/2011	Seol et al.
8,289,688	B2	10/2012	Behar et al.
8,300,022	B2	10/2012	Brenneman
8,464,161	B2	6/2013	Giles et al.
8,577,957	B2	11/2013	Behar et al.
8,612,888	B2	12/2013	Pennington et al.
8,624,844	B2	1/2014	Behar et al.
9,003,315	B2	4/2015	Behar et al.
9,495,070	B2	11/2016	Pennington et al.
9,563,229	B2	2/2017	Behar et al.
9,880,715	B2	1/2018	Behar et al.
9,927,835	B2	3/2018	Behar et al.
2001/0032320	A1	10/2001	Abdelnur et al.
2002/0005818	A1	1/2002	Bruzzone
2002/0010707	A1	1/2002	Chang et al.
2002/0021258	A1	2/2002	Koenig
2002/0190947	A1	12/2002	Feinstein
2003/0048595	A1	3/2003	Hsieh et al.
2003/0080995	A1	5/2003	Tenenbaum et al.
2003/0107603	A1	6/2003	Clapper

(56) **References Cited**

U.S. PATENT DOCUMENTS

2003/0109232	A1	6/2003	Park et al.	
2004/0001049	A1	1/2004	Oakley	
2004/0025993	A1	2/2004	Russell	
2004/0185920	A1*	9/2004	Choi	H04M 1/021 455/575.1
2004/0203535	A1	10/2004	Kim et al.	
2004/0207568	A1	10/2004	Ooshima et al.	
2004/0212602	A1	10/2004	Nako et al.	
2004/0228076	A1	11/2004	Clapper	
2005/0005241	A1	1/2005	Hunleth et al.	
2005/0010860	A1	1/2005	Weiss et al.	
2005/0018396	A1	1/2005	Nakajima et al.	
2005/0041378	A1	2/2005	Hamada et al.	
2005/0063145	A1	3/2005	Homer et al.	
2005/0071782	A1	3/2005	Barrett et al.	
2005/0083642	A1	4/2005	Senpuku et al.	
2005/0091596	A1	4/2005	Anthony et al.	
2005/0093868	A1	5/2005	Hinckley	
2005/0128695	A1	6/2005	Han	
2005/0134717	A1	6/2005	Misawa	
2005/0146845	A1	7/2005	Moscovitch	
2005/0210399	A1	9/2005	Filner et al.	
2005/0221865	A1	10/2005	Nishiyama et al.	
2005/0257400	A1	11/2005	Sommerer et al.	
2005/0282596	A1	12/2005	Park et al.	
2006/0015823	A1	1/2006	Chao et al.	
2006/0017692	A1	1/2006	Wehrenberg et al.	
2006/0101064	A1	5/2006	Strong et al.	
2006/0123353	A1	6/2006	Matthews et al.	
2006/0126284	A1	6/2006	Moscovitch	
2006/0238439	A1	10/2006	Fuller et al.	
2006/0264243	A1	11/2006	Aarras	
2006/0268500	A1	11/2006	Kuhn	
2006/0271644	A1	11/2006	Yamaizumi et al.	
2006/0277167	A1	12/2006	Gross et al.	
2007/0024722	A1	2/2007	Eura et al.	
2007/0035616	A1*	2/2007	Lee	H04N 1/00307 348/14.16
2007/0073833	A1	3/2007	Roy et al.	
2007/0120762	A1	5/2007	O'Gorman	
2007/0138806	A1	6/2007	Ligtenberg et al.	
2007/0178952	A1*	8/2007	Ehara	A63F 13/00 463/1
2007/0182663	A1	8/2007	Biech	
2007/0240076	A1	10/2007	Astala et al.	
2007/0242421	A1	10/2007	Goschin et al.	
2007/0247446	A1	10/2007	Orsley et al.	
2007/0268202	A1*	11/2007	Lim	G02F 1/133512 345/1.1
2007/0296820	A1	12/2007	Lonn	
2008/0024388	A1	1/2008	Bruce	
2008/0024465	A1	1/2008	Hawkins et al.	
2008/0042987	A1	2/2008	Westerman et al.	
2008/0059888	A1	3/2008	Dunko	
2008/0062625	A1	3/2008	Batio	
2008/0074831	A1	3/2008	Lee et al.	
2008/0088602	A1	4/2008	Hotelling	
2008/0092039	A1	4/2008	Brockway et al.	
2008/0134093	A1	6/2008	Dharmarajan et al.	
2008/0158795	A1	7/2008	Aoki et al.	
2008/0174570	A1	7/2008	Jobs et al.	
2008/0209493	A1	8/2008	Choi et al.	
2008/0235594	A1	9/2008	Bhumkar et al.	
2008/0284738	A1	11/2008	Hovden et al.	
2009/0007001	A1	1/2009	Morin et al.	
2009/0019383	A1	1/2009	Riley et al.	
2009/0019479	A1	1/2009	Kwak et al.	
2009/0150784	A1	6/2009	Denney et al.	
2009/0150826	A1	6/2009	Lyndersay et al.	
2009/0160811	A1*	6/2009	Motoe	G06F 1/162 345/173
2009/0190295	A1	7/2009	Chin et al.	
2009/0193364	A1	7/2009	Jarrett et al.	
2009/0244012	A1	10/2009	Behar et al.	
2009/0244016	A1*	10/2009	Casparian	G06F 1/1616 345/173
2009/0244832	A1	10/2009	Behar et al.	
2009/0249244	A1	10/2009	Robinson et al.	
2009/0275366	A1	11/2009	Schilling	
2009/0300511	A1	12/2009	Behar et al.	
2009/0303205	A1	12/2009	Seibert	
2009/0303676	A1	12/2009	Behar et al.	
2009/0322790	A1	12/2009	Behar et al.	
2010/0174993	A1	7/2010	Pennington et al.	
2013/0141854	A1	6/2013	Behar et al.	
2014/0282263	A1	9/2014	Pennington et al.	
2015/0277688	A1	10/2015	Behar et al.	
2017/0090699	A1	3/2017	Pennington et al.	
2017/0205849	A1	7/2017	Behar et al.	
2018/0181271	A1	6/2018	Behar et al.	

FOREIGN PATENT DOCUMENTS

DE	199 52 486	A1	5/2001
EP	0 588 210	A1	3/1994
EP	1 316 877	A1	6/2003
GB	2321982	A	8/1998
JP	5-197507	A	8/1993
JP	6-090200	A	3/1994
JP	6-242853	A	9/1994
JP	6-259166	A	9/1994
JP	8-179851	A	7/1996
JP	10-111658	A	4/1998
JP	11-296259		10/1999
JP	2001-167211	A	6/2001
JP	2004-302179	A	10/2004
JP	2005-159741	A	6/2005
JP	2005-242436	A	9/2005
JP	2006-227409	A	8/2006
KR	1020000036647		6/2002
WO	WO 95/24007	A1	9/1995

OTHER PUBLICATIONS

European Office Communication dated Nov. 23, 2015 in connection to European Application No. 09727165.4.

European Examination Report dated Nov. 22, 2016 in connection with European Application No. 09727165.4.

International Search Report and Written Opinion for International Application No. PCT/US2009/39117 dated Sep. 28, 2009.

International Preliminary Report on Patentability dated Oct. 14, 2010 for International Application No. PCT/US2009/039117.

Extended European Search Report dated Apr. 5, 2011 in connection with European Application No. 09755433.1.

European Examination Report dated Jan. 17, 2017 in connection with European Application No. 09755433.1.

Canadian Office Action dated Aug. 18, 2017 in connection with Canadian Application No. 2719828.

Chinese Office Action dated Jul. 18, 2013 in connection with Chinese Application No. 200980117859.8.

Japanese Office Action dated Dec. 4, 2012 in connection with Japanese Application No. 2011-503058 and partial English translation thereof.

Japanese Office Action dated Apr. 16, 2013 in connection with Japanese Application No. 2011-503058.

Office Action L2039-700111 dated Apr. 4, 2011, for U.S. Appl. No. 12/170,951.

Office Action dated Jun. 7, 2012, for U.S. Appl. No. 12/170,951.

http://laptop.org/en/laptop/start/ebook.shtml accessed on Sep. 29, 2008.

Miller, Creating a Digital Home Entertainment System with Windows Media Center. 2006, Que.

* cited by examiner

Case 1:23-cv-00121-RGA Document 18-1 Filed 05/08/23 Page 126 of 528 PageID #: 932

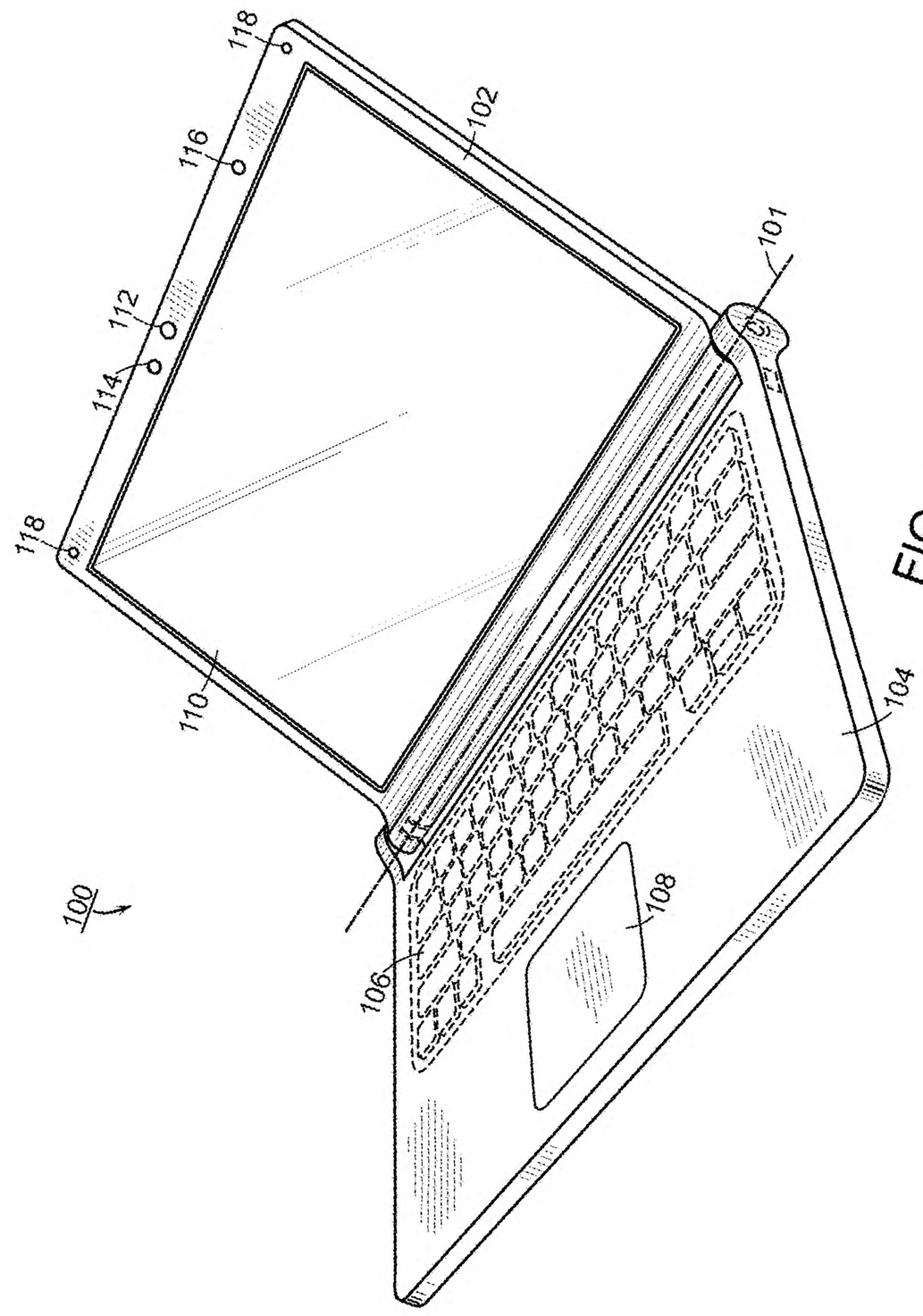

FIG. 1

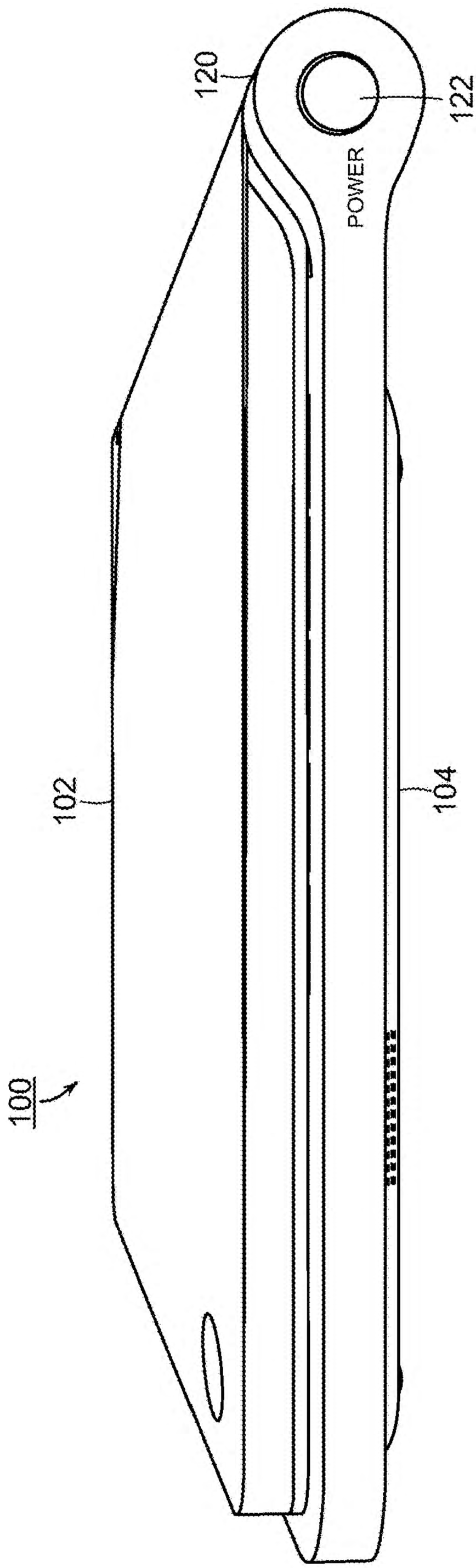

FIG. 2

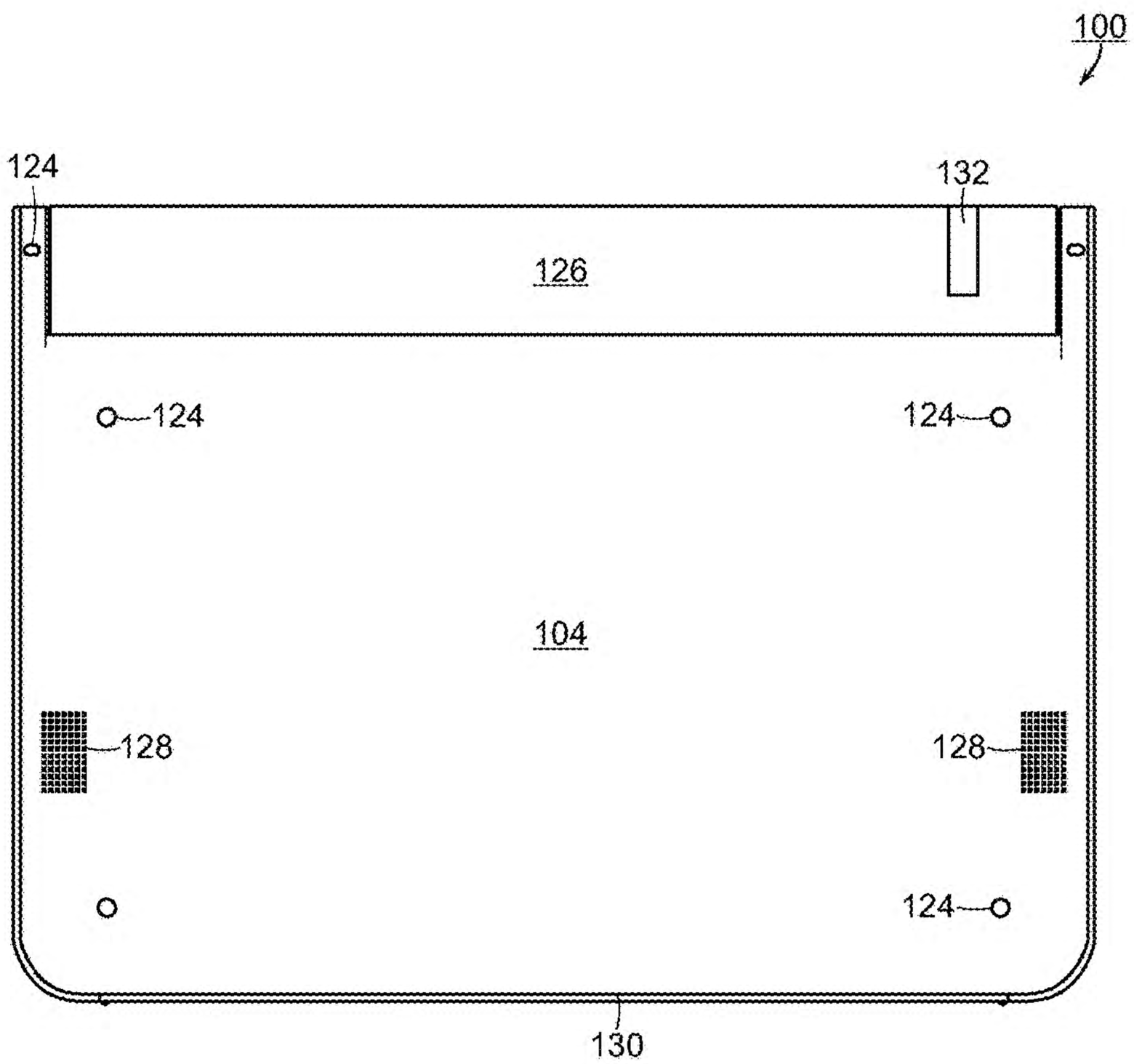

FIG. 3

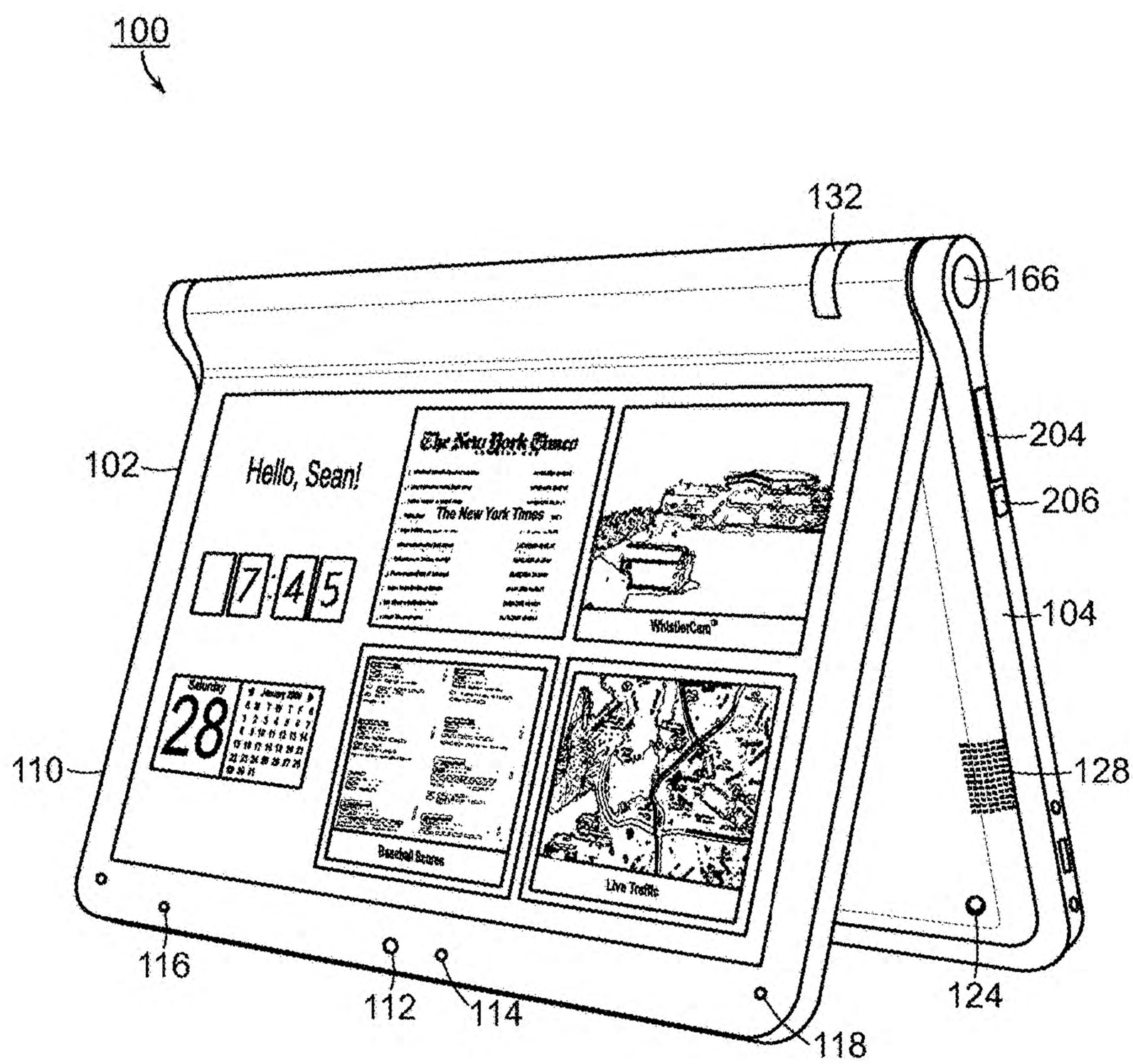
100
132
166
204
206
104
128
102
Hello, Sean!
The New York Times
WhistlerCam
Baseball Scores
Live Traffic
7:45
28
110
116
112
114
118
124

FIG. 4

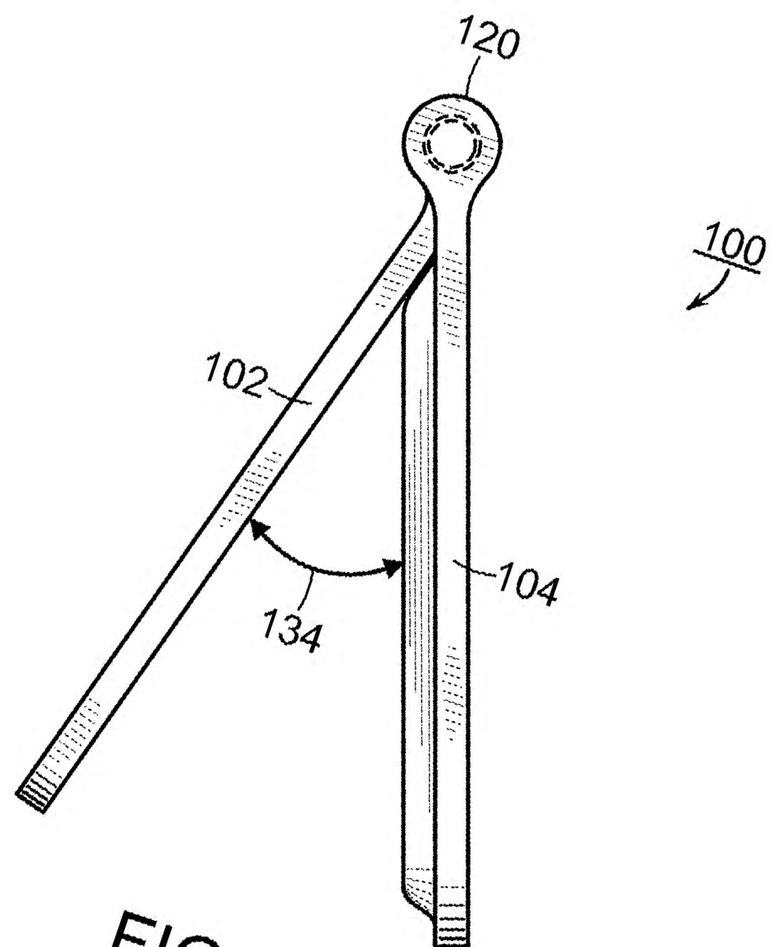

FIG. 5

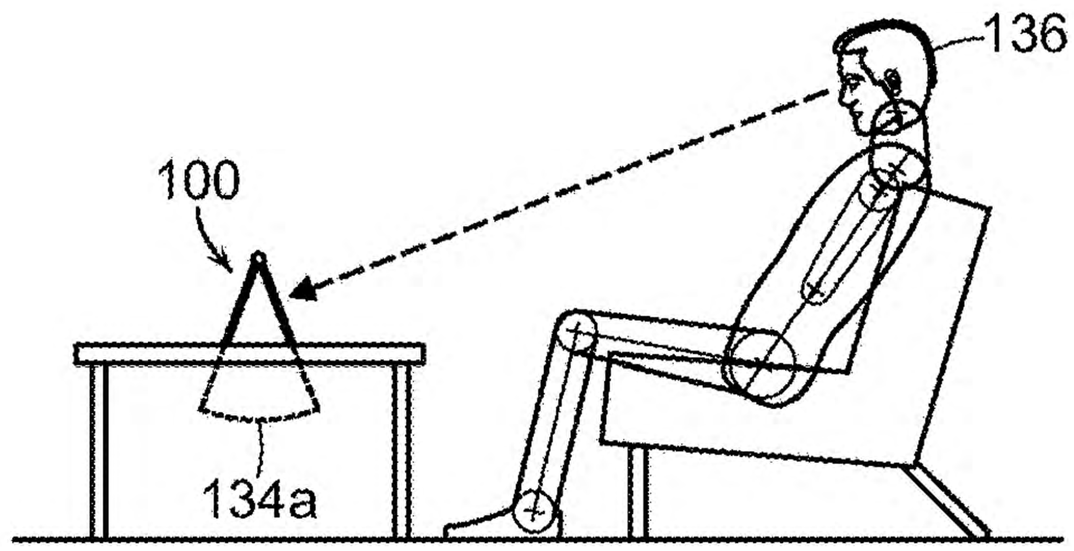

FIG. 6A

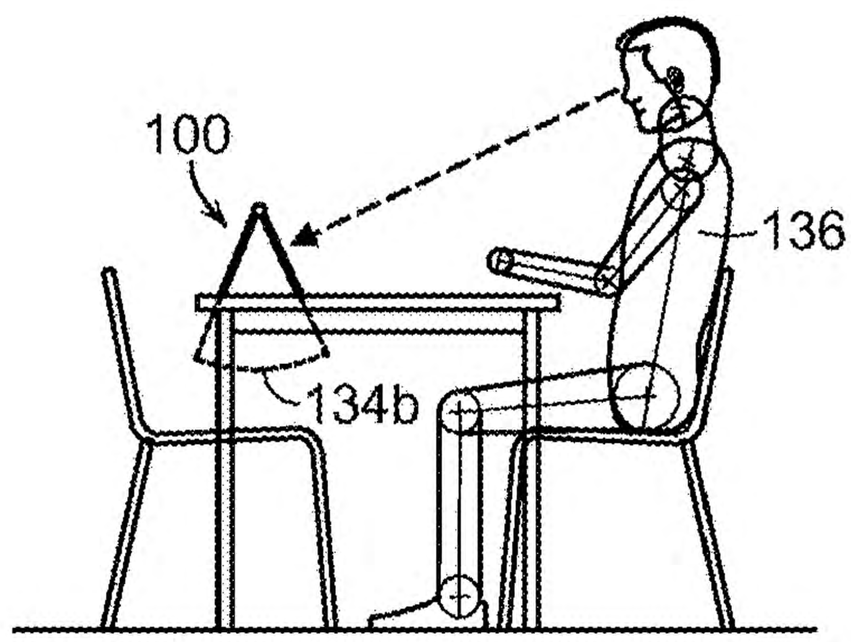

FIG. 6B

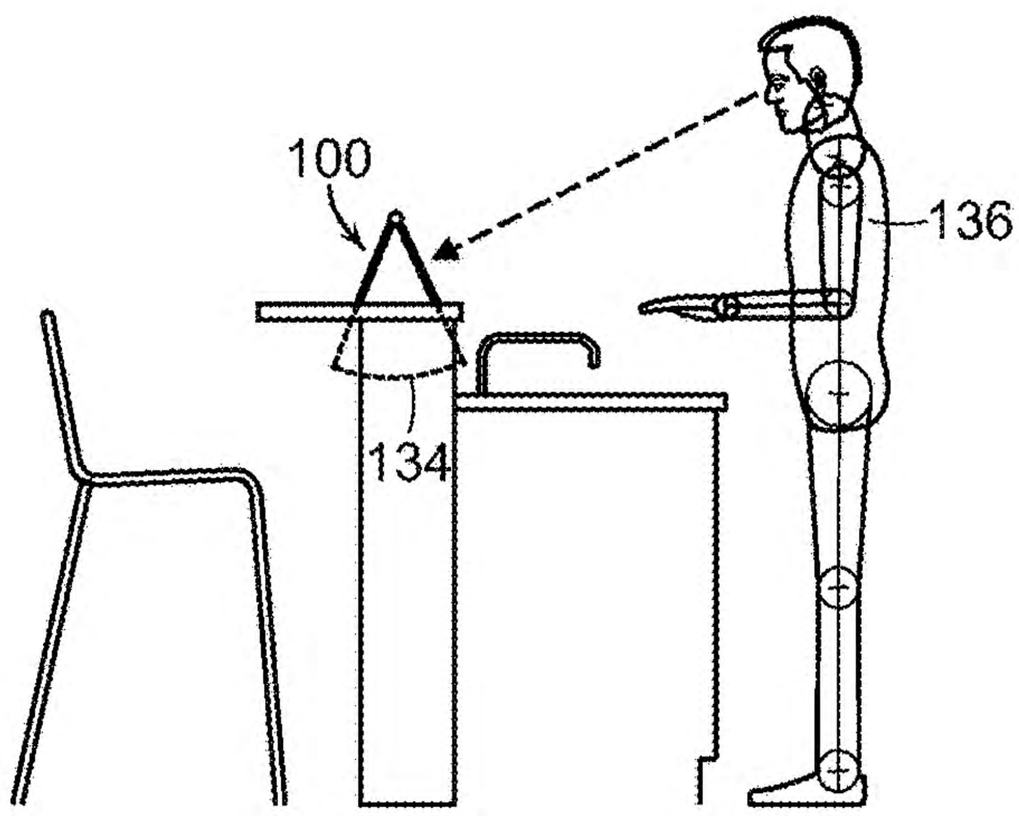

FIG. 6C

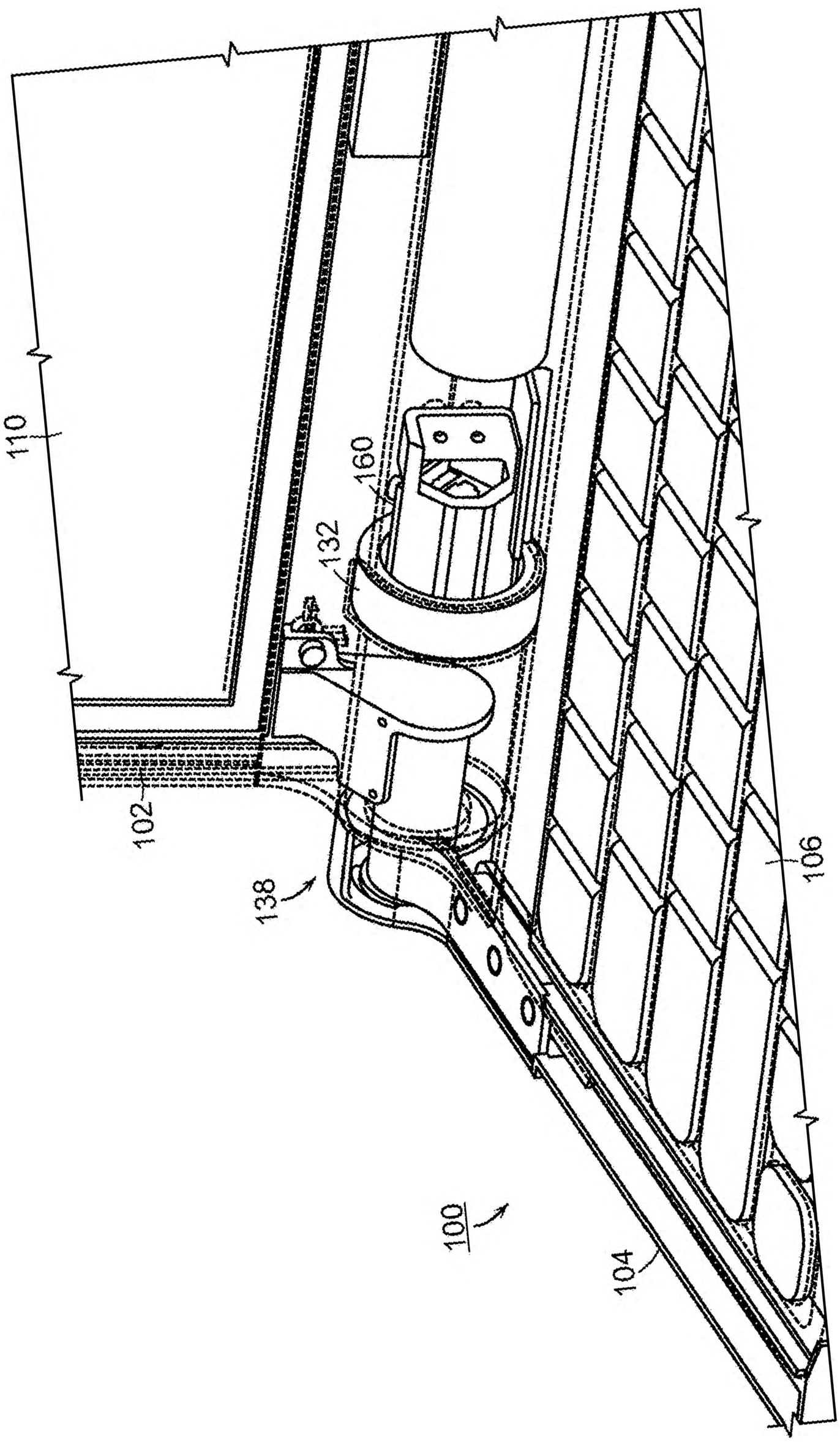

FIG. 7A

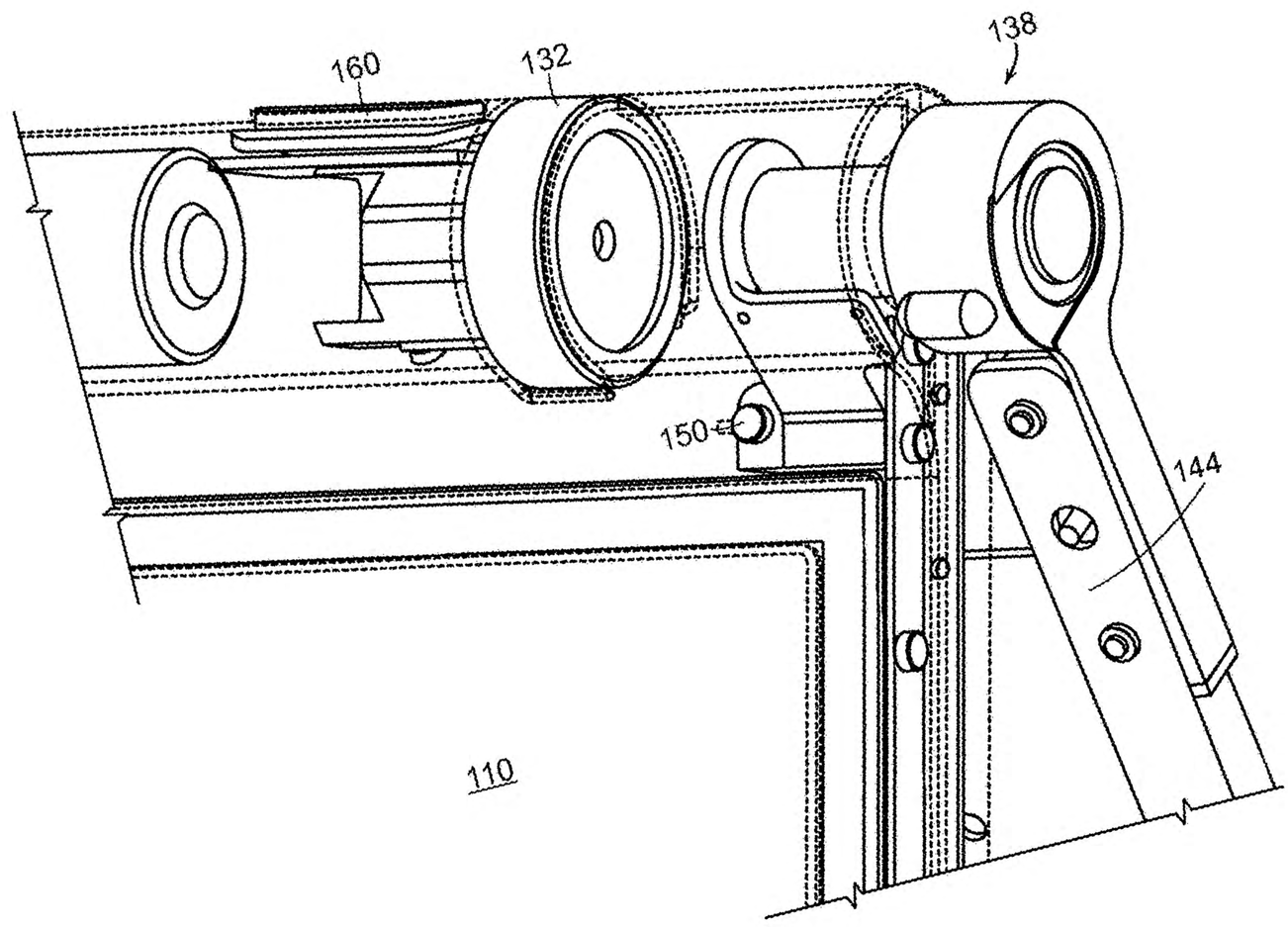

FIG. 7B

Case 1:23-cv-00121-RGA Document 18-1 Filed 05/09/23 Page 133 of 528 PageID #: 939

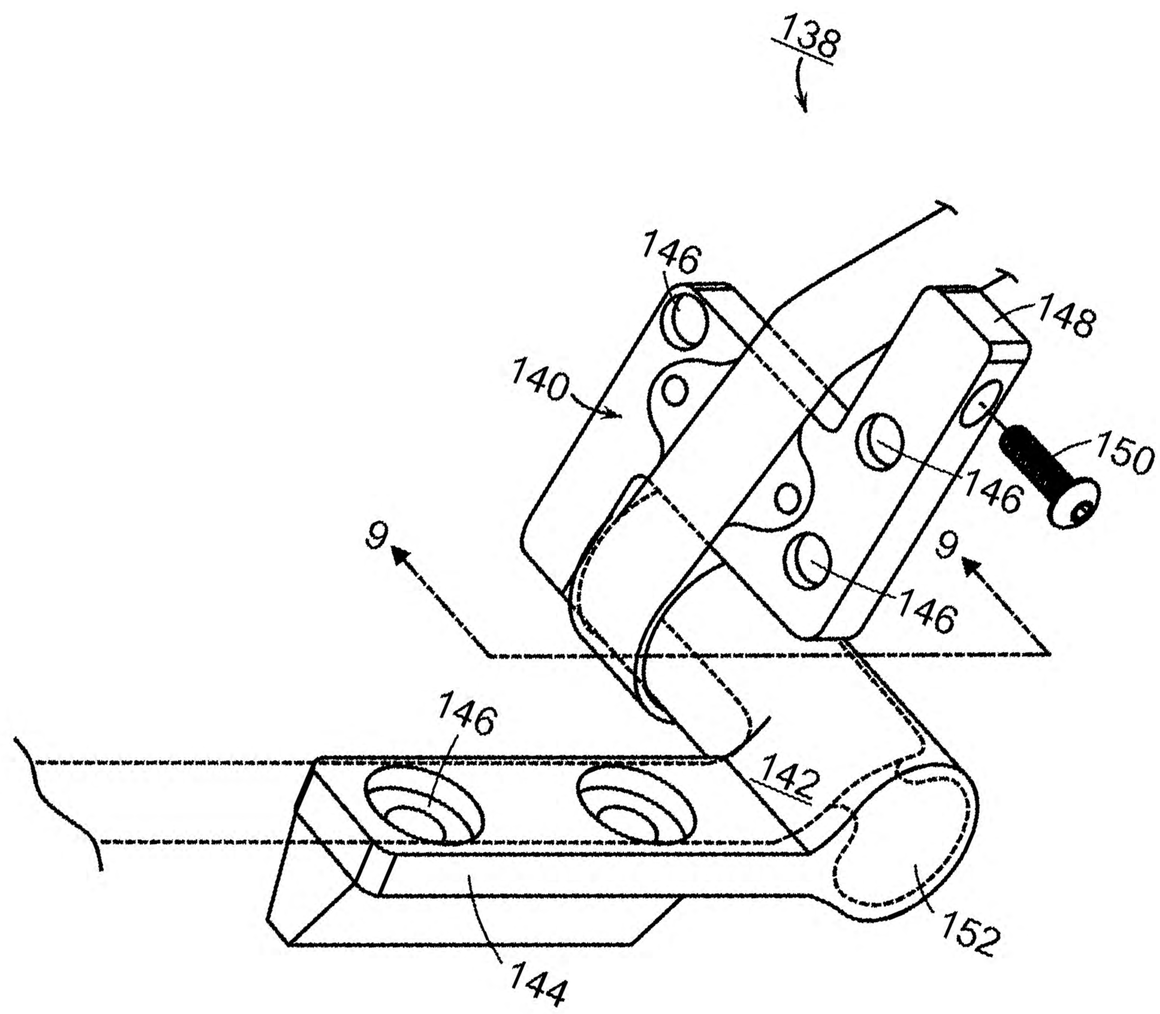

FIG. 8

Case 1:23-cv-00121-RGA Document 18-1 Filed 05/08/23 Page 135 of 528 PageID #: 941

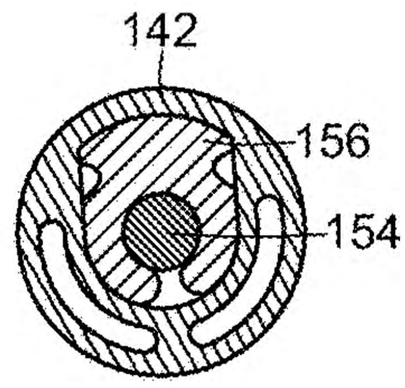

FIG. 9

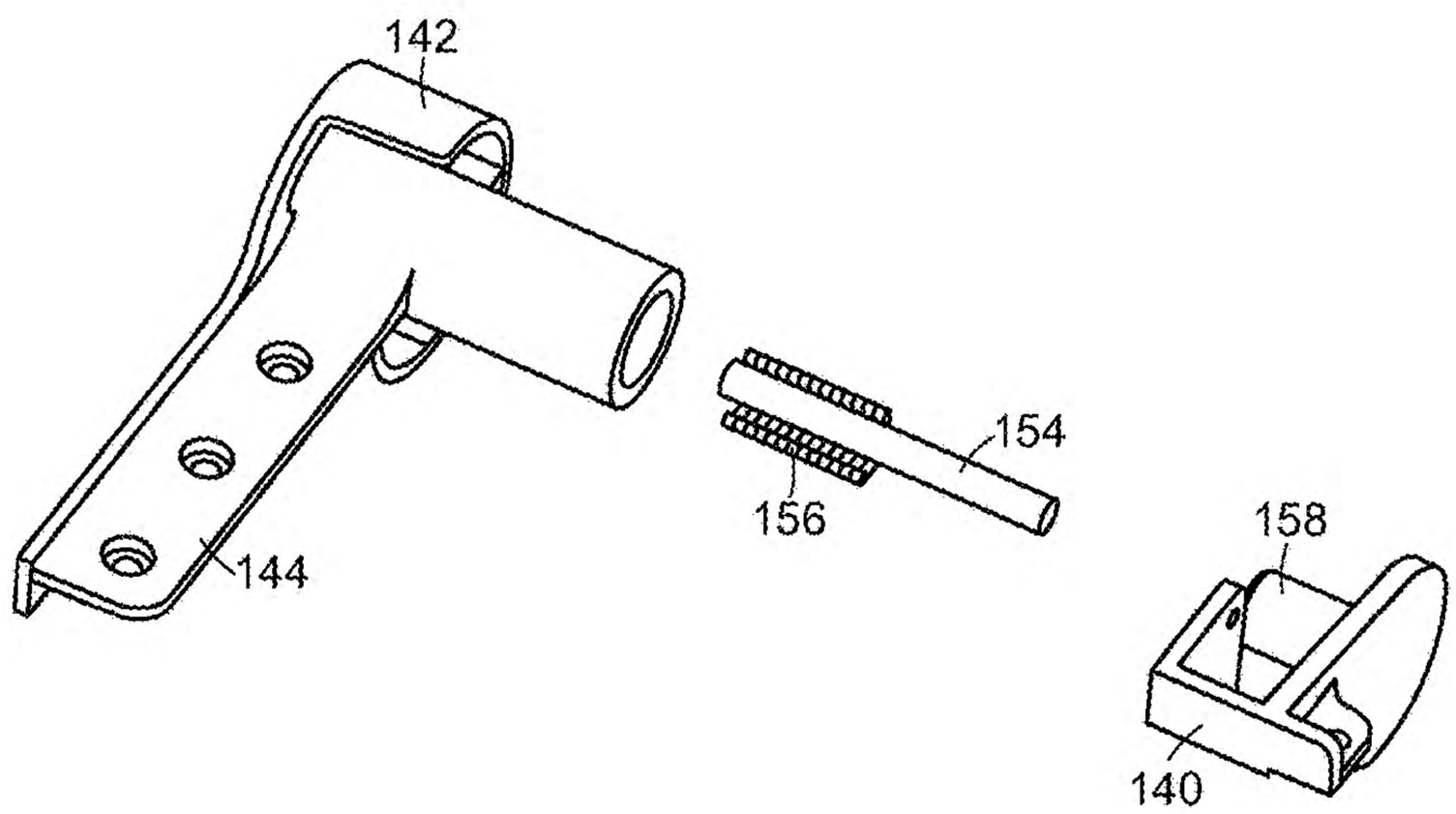

FIG. 10

Case 1:23-cv-00121-RGA Document 18-1 Filed 05/08/23 Page 136 of 528 PageID #: 942

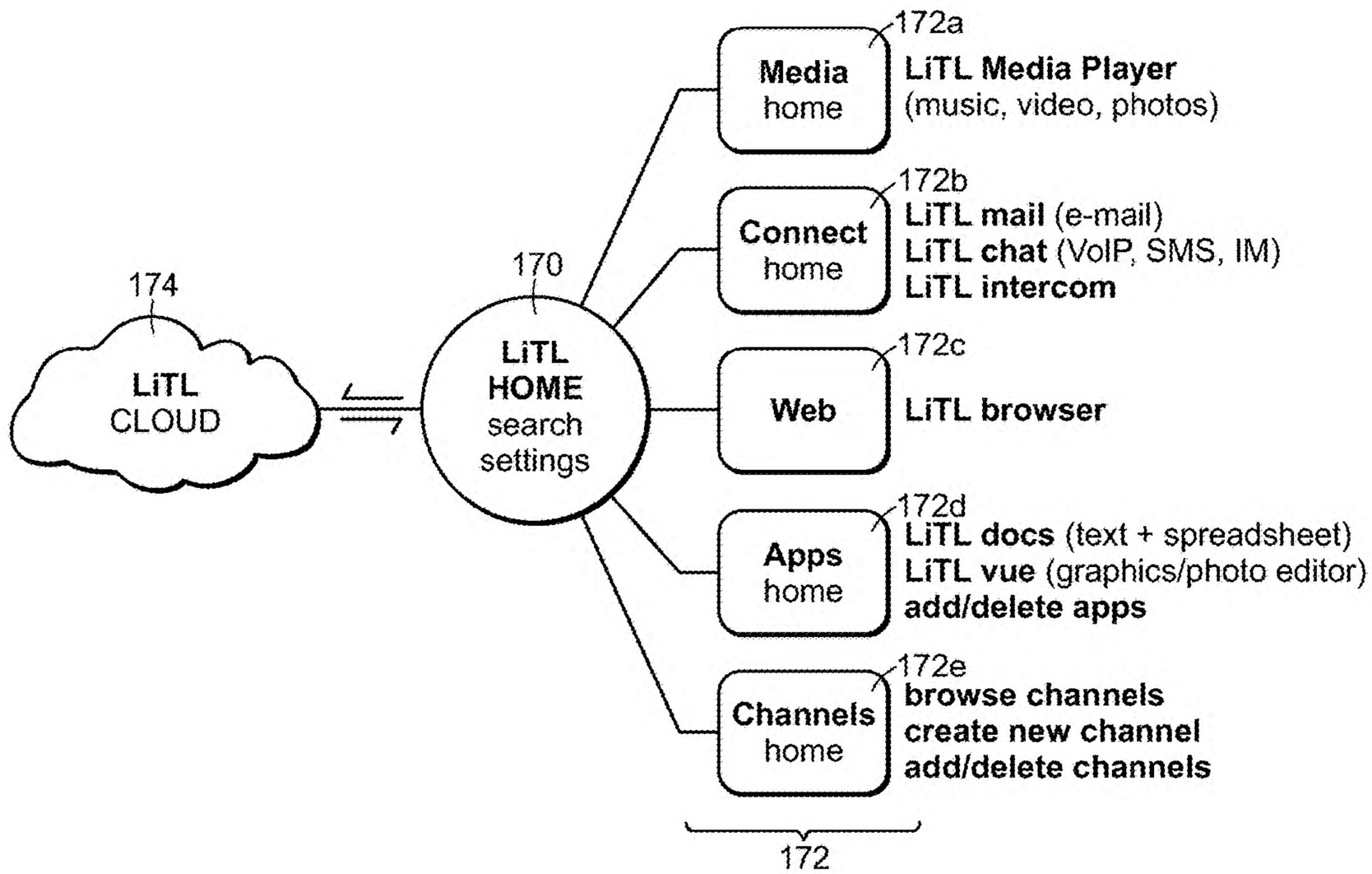

FIG. 11

Case 1:23-cv-00121-RGA Document 18-1 Filed 05/08/23 Page 137 of 528 PageID #: 943

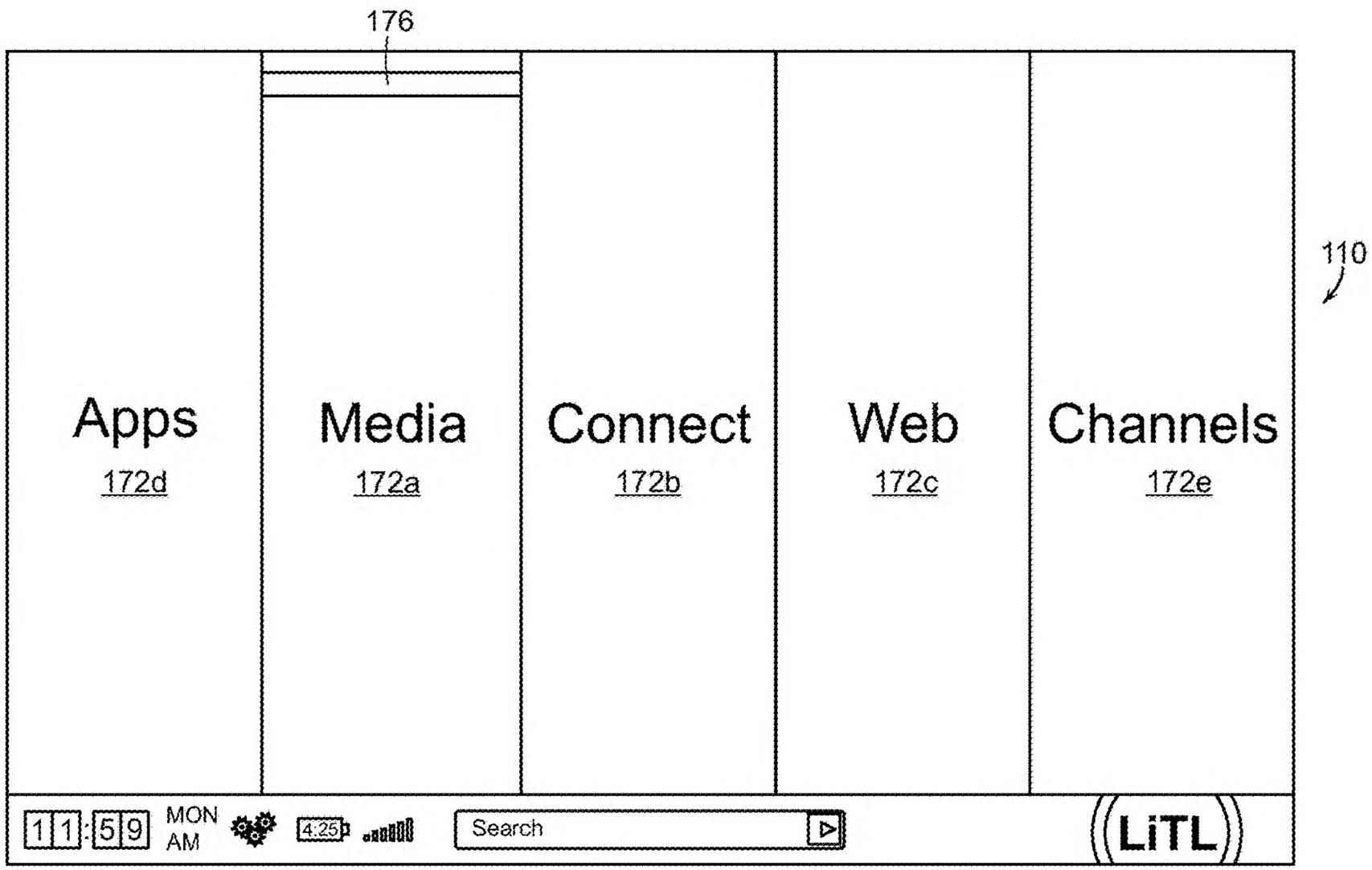

FIG. 12

Case 1:23-cv-00121-RGA Document 18-1 Filed 05/08/23 Page 138 of 528 PageID #: 944

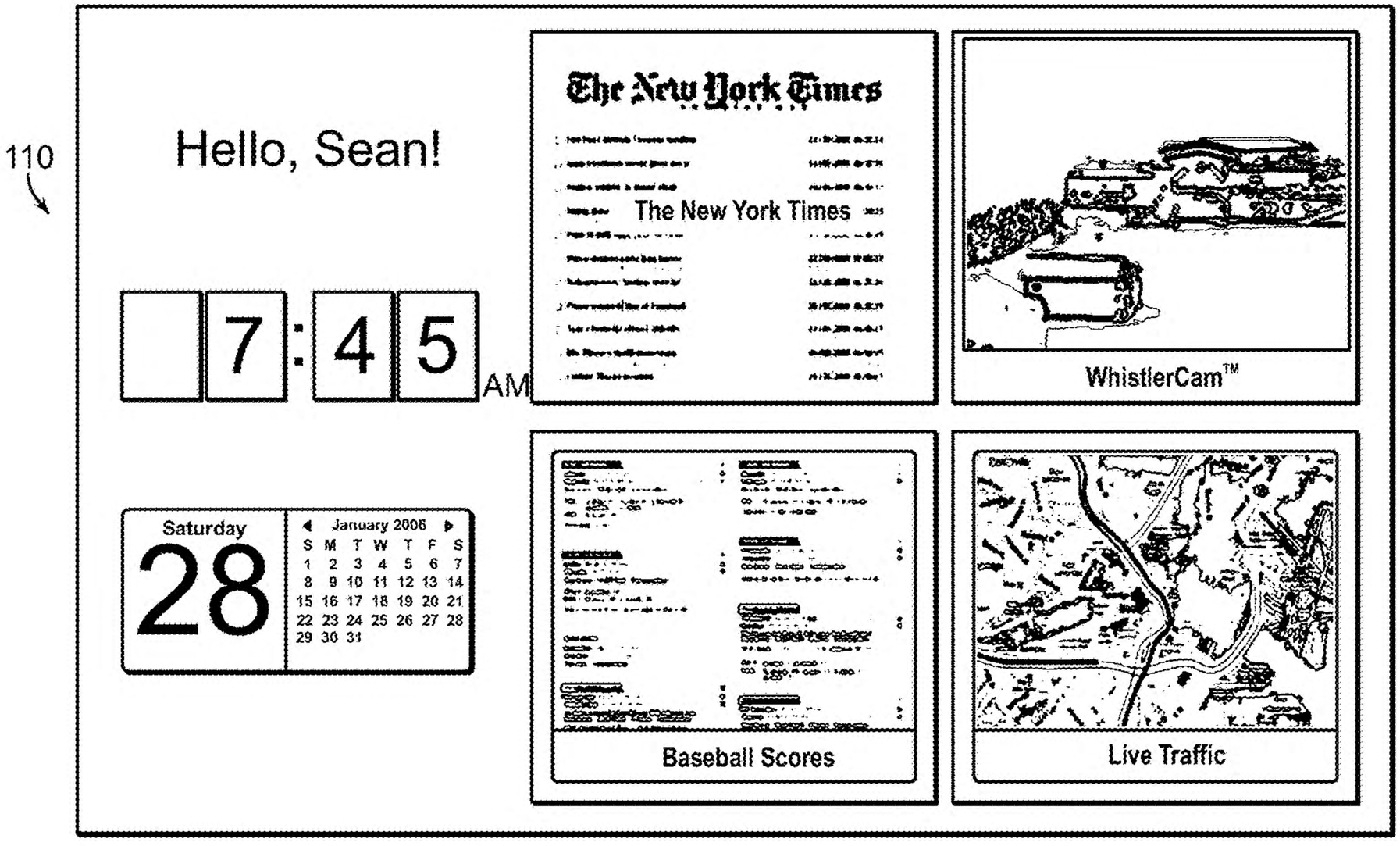

FIG. 13

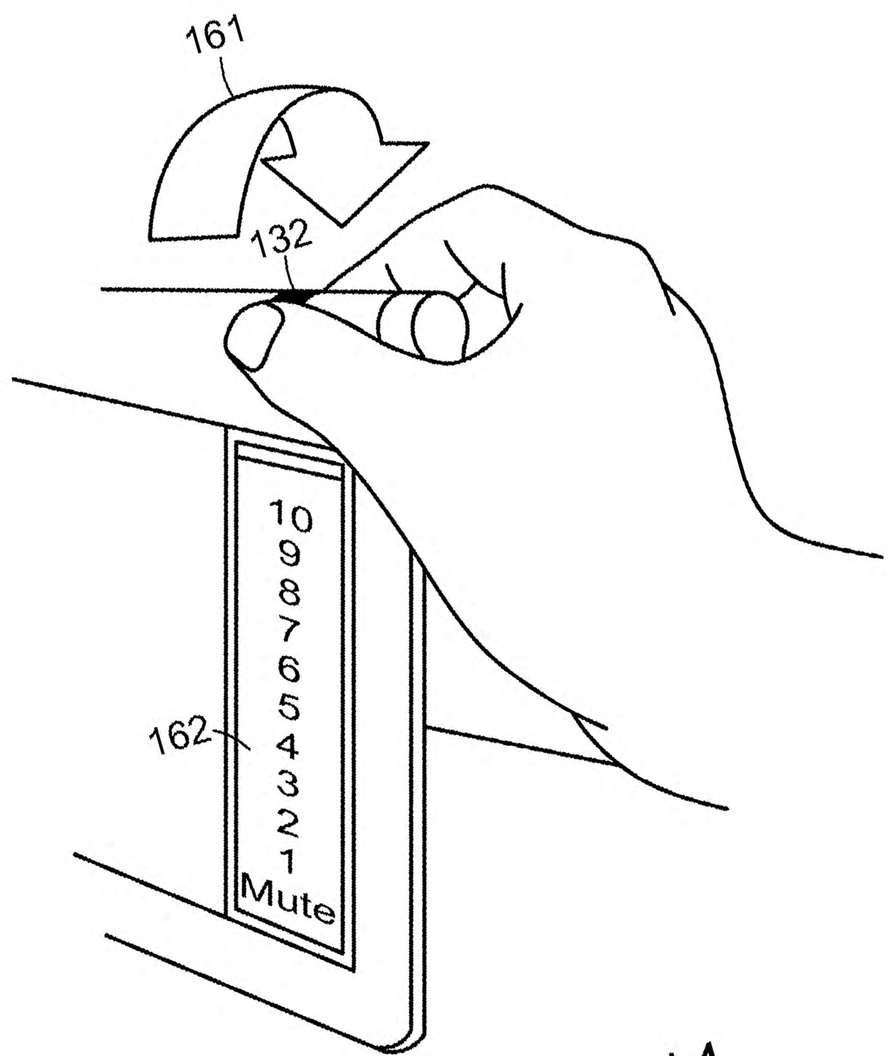

FIG. 14

FIG. 15

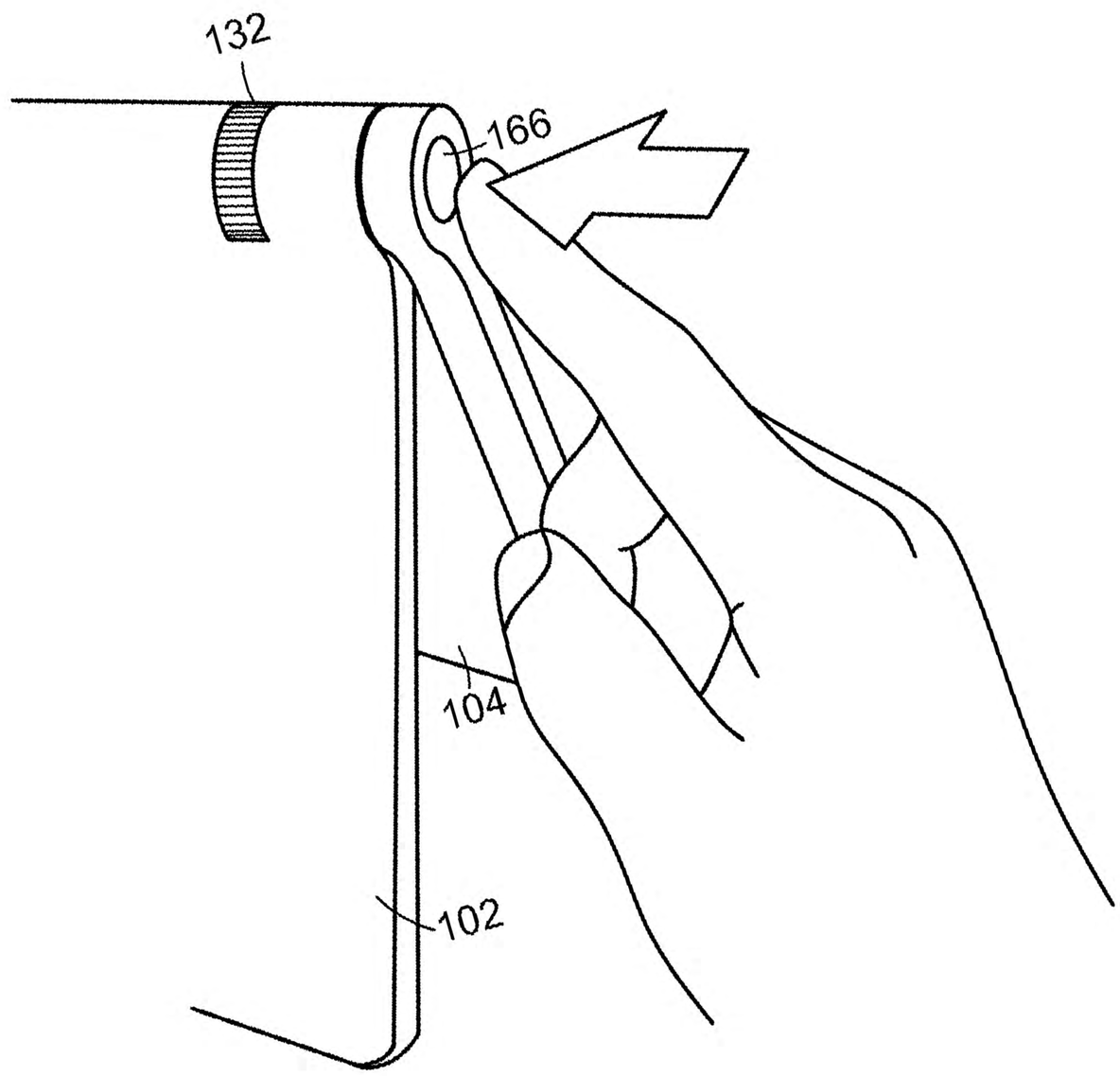

FIG. 16

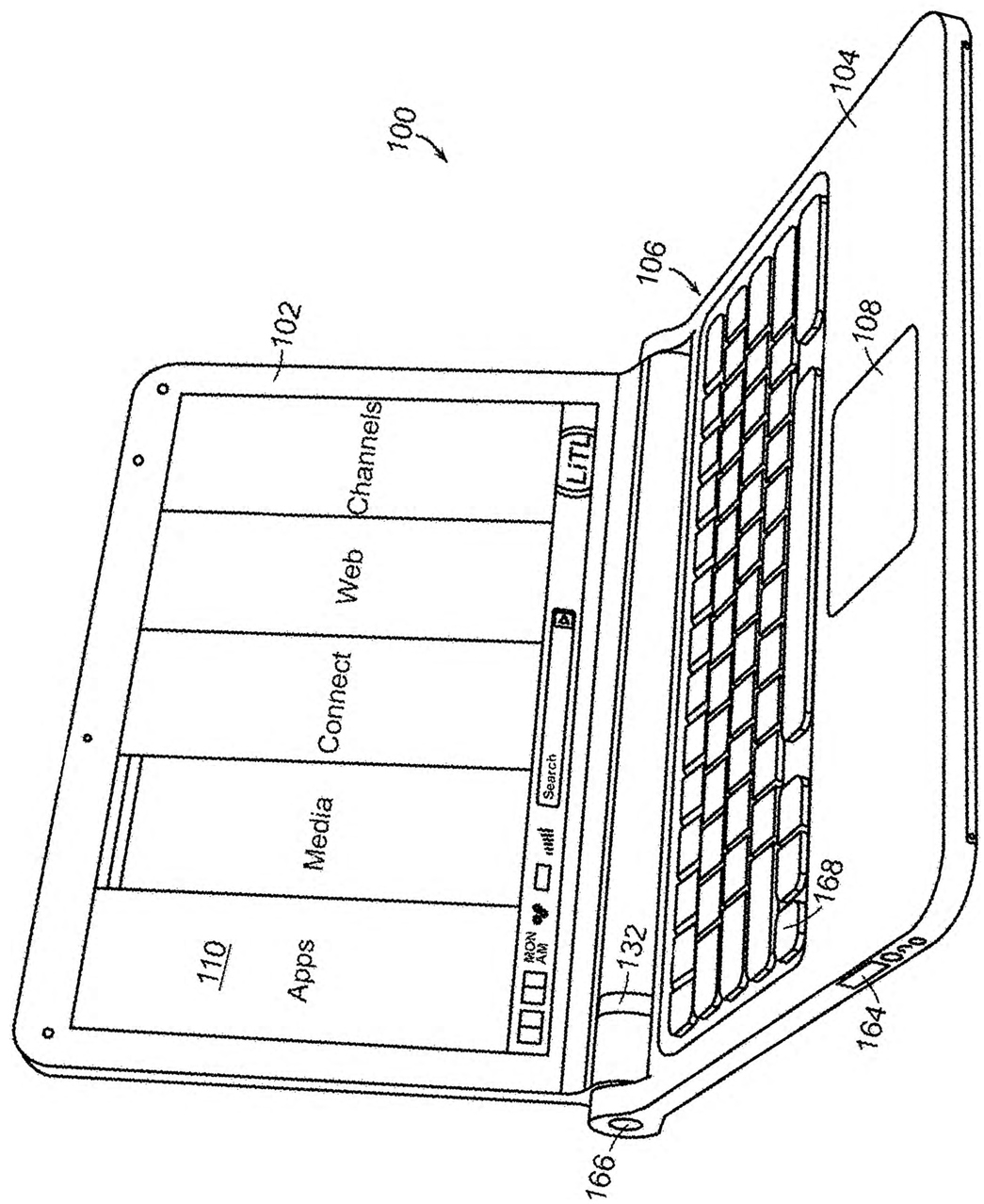

FIG. 17

Case 1:23-cv-00121-RGA Document 19-1 Filed 05/08/23 Page 142 of 528 PageID #: 948

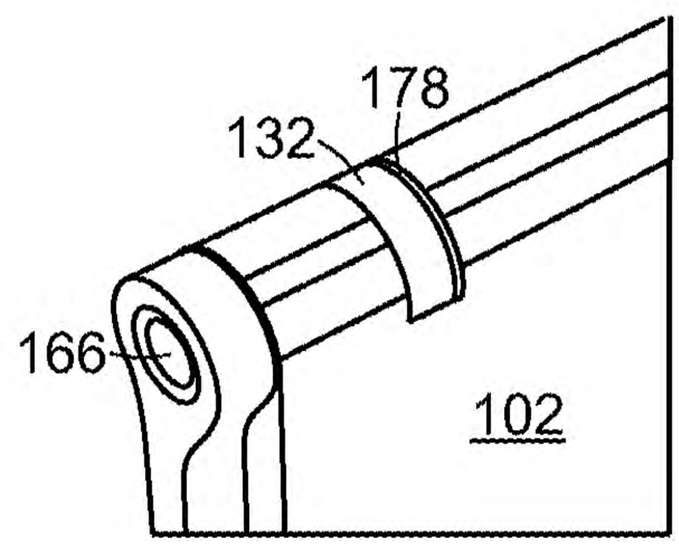

FIG. 18

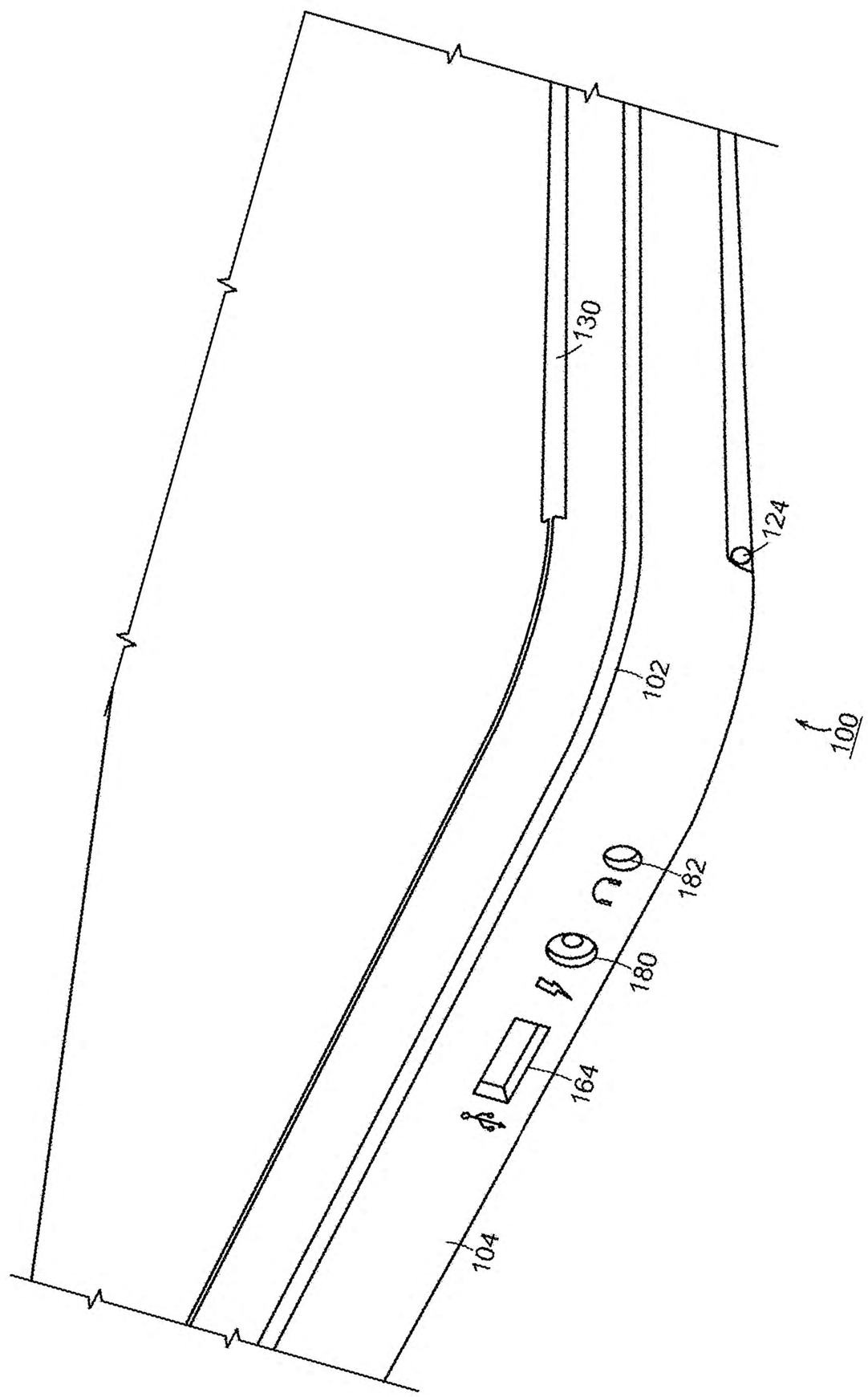

FIG. 19

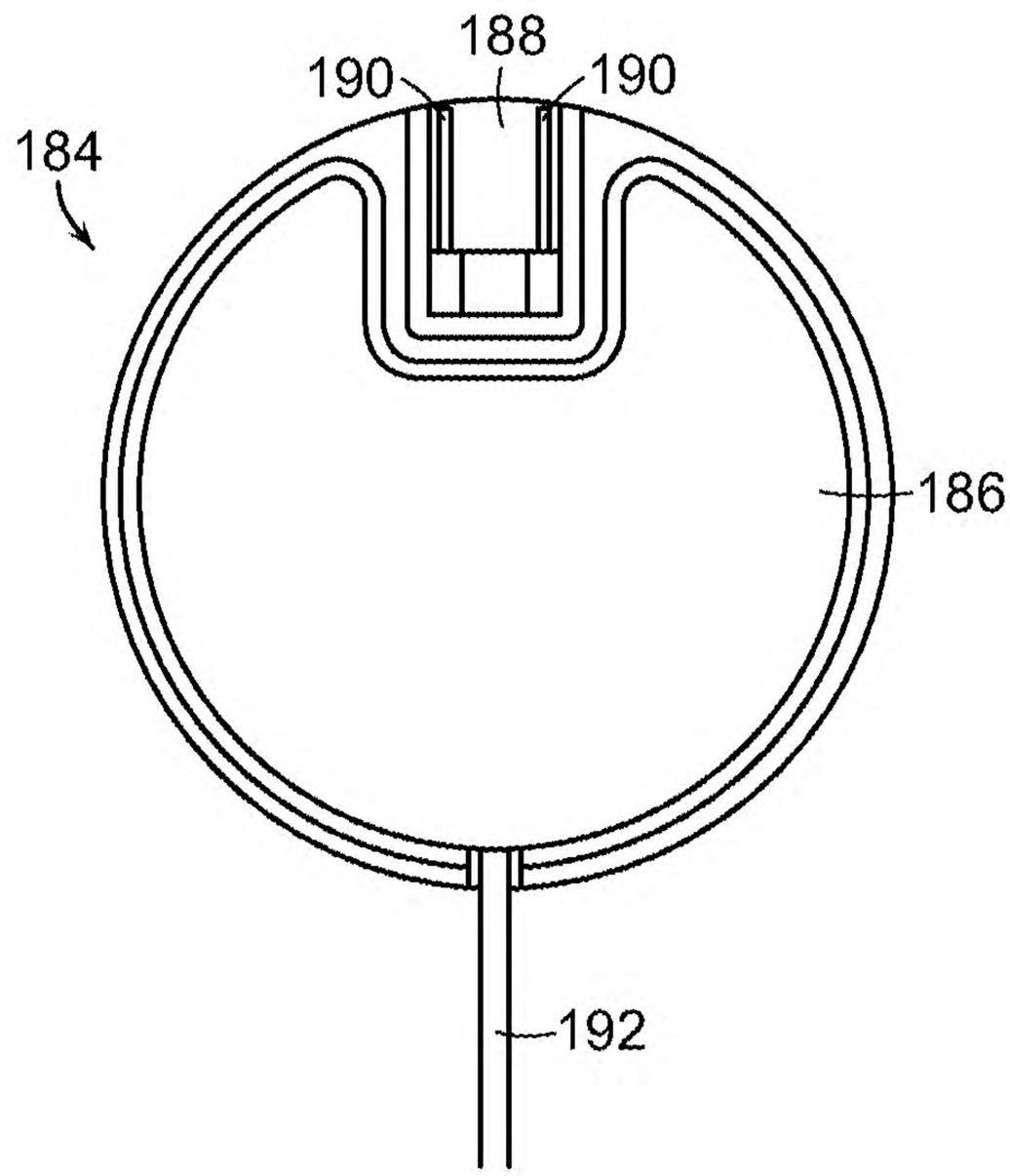

FIG. 20

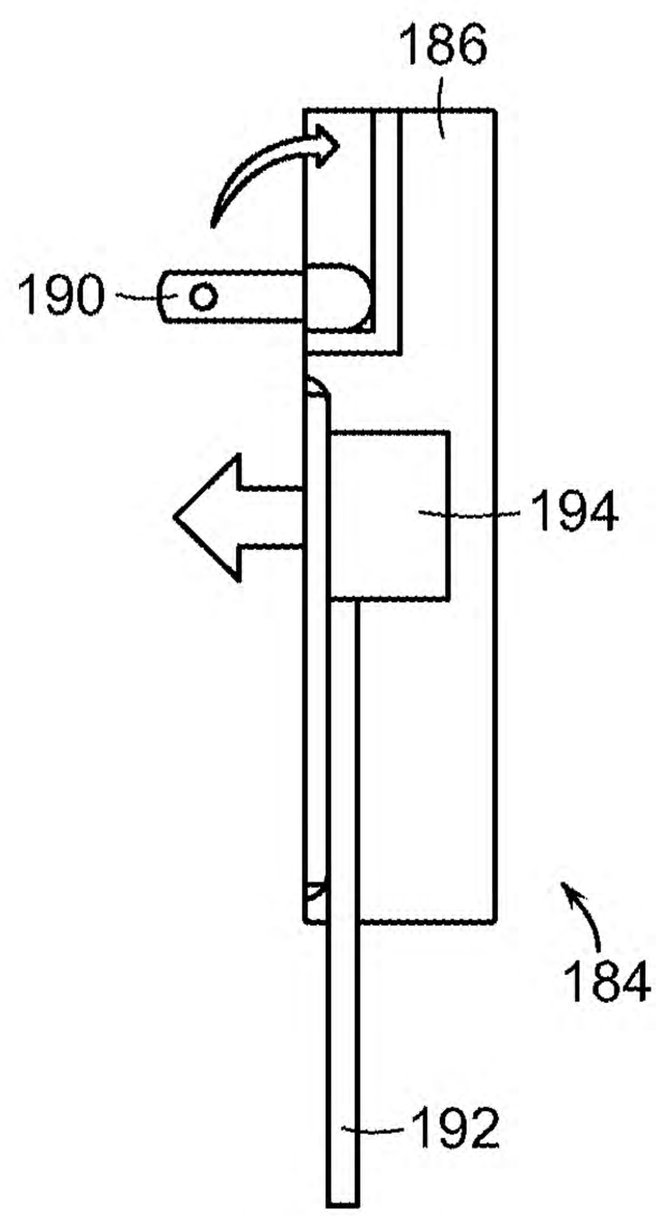

FIG. 21

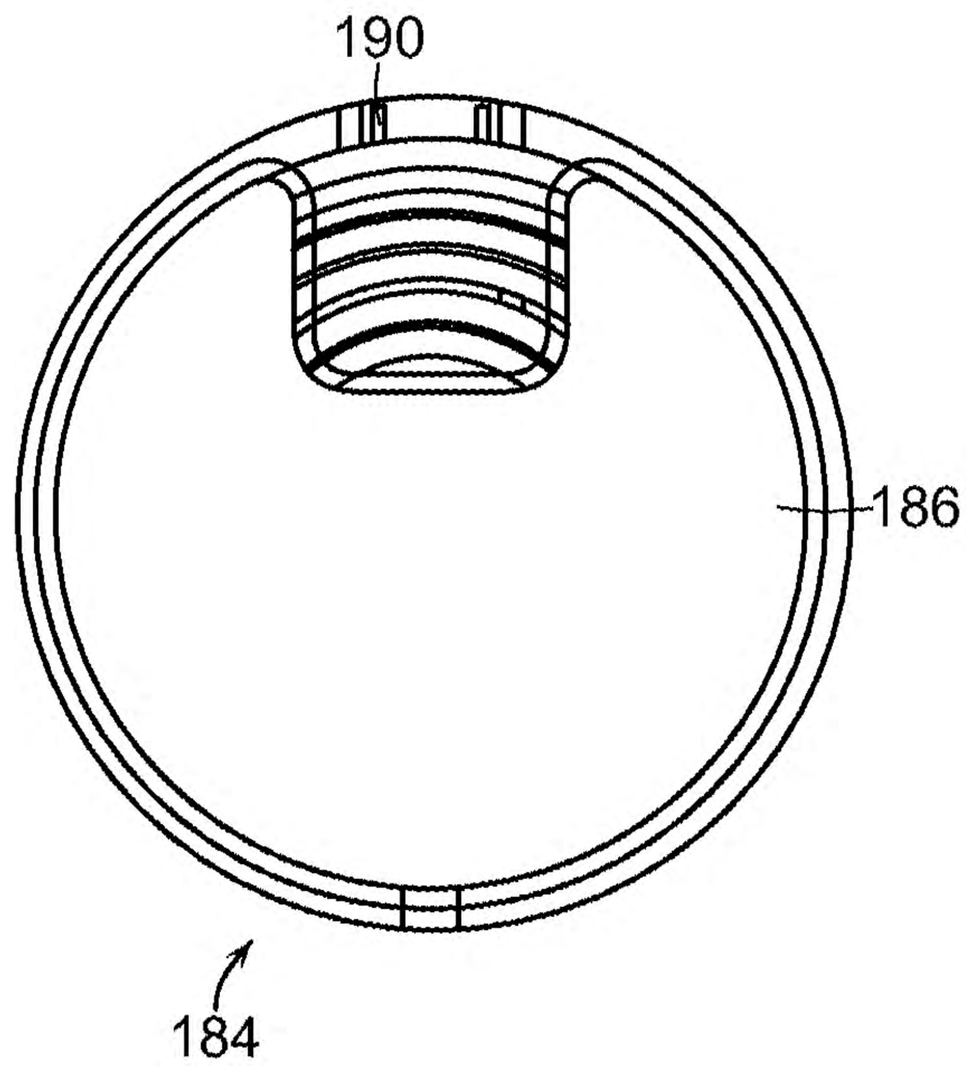

FIG. 22A

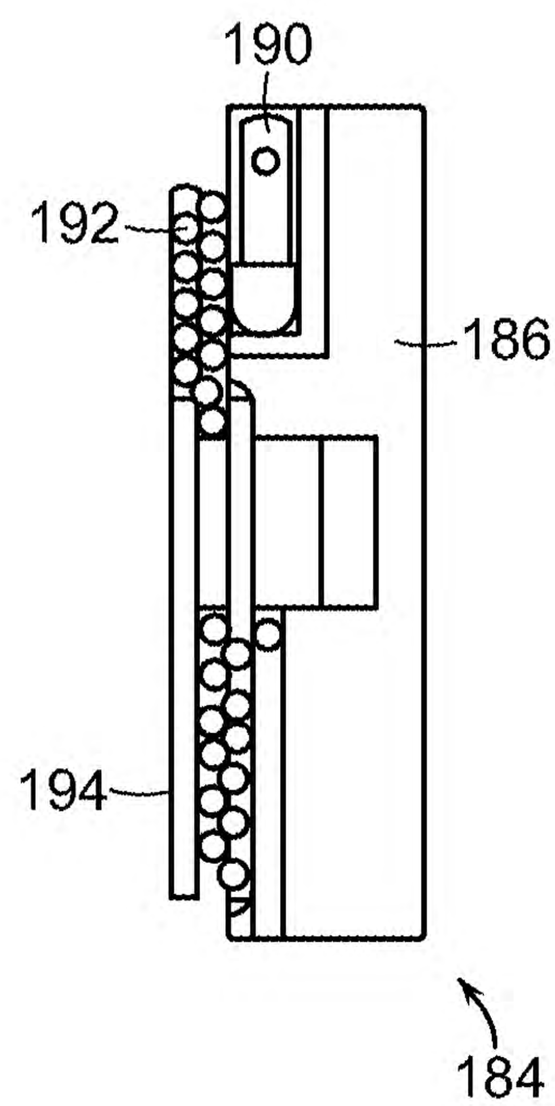

FIG. 22B

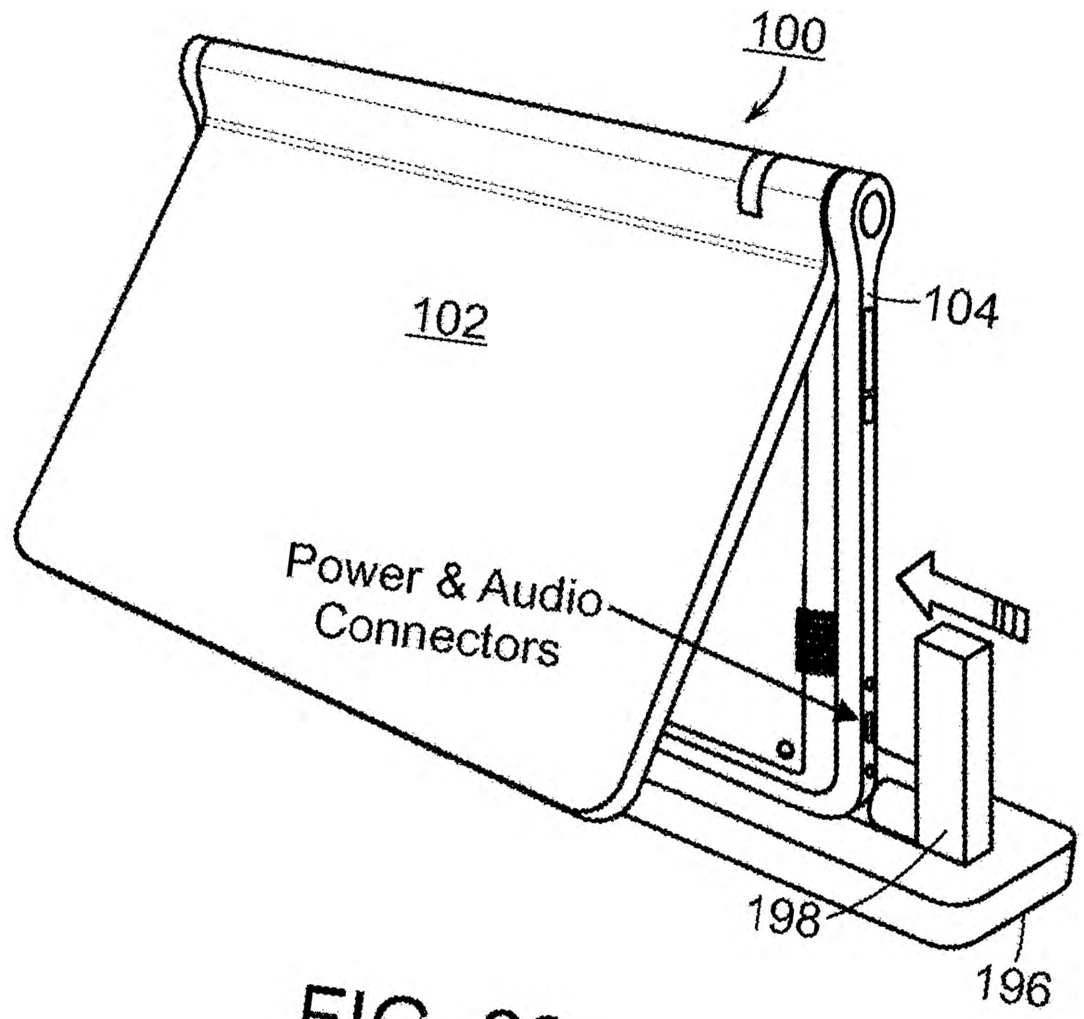

FIG. 23

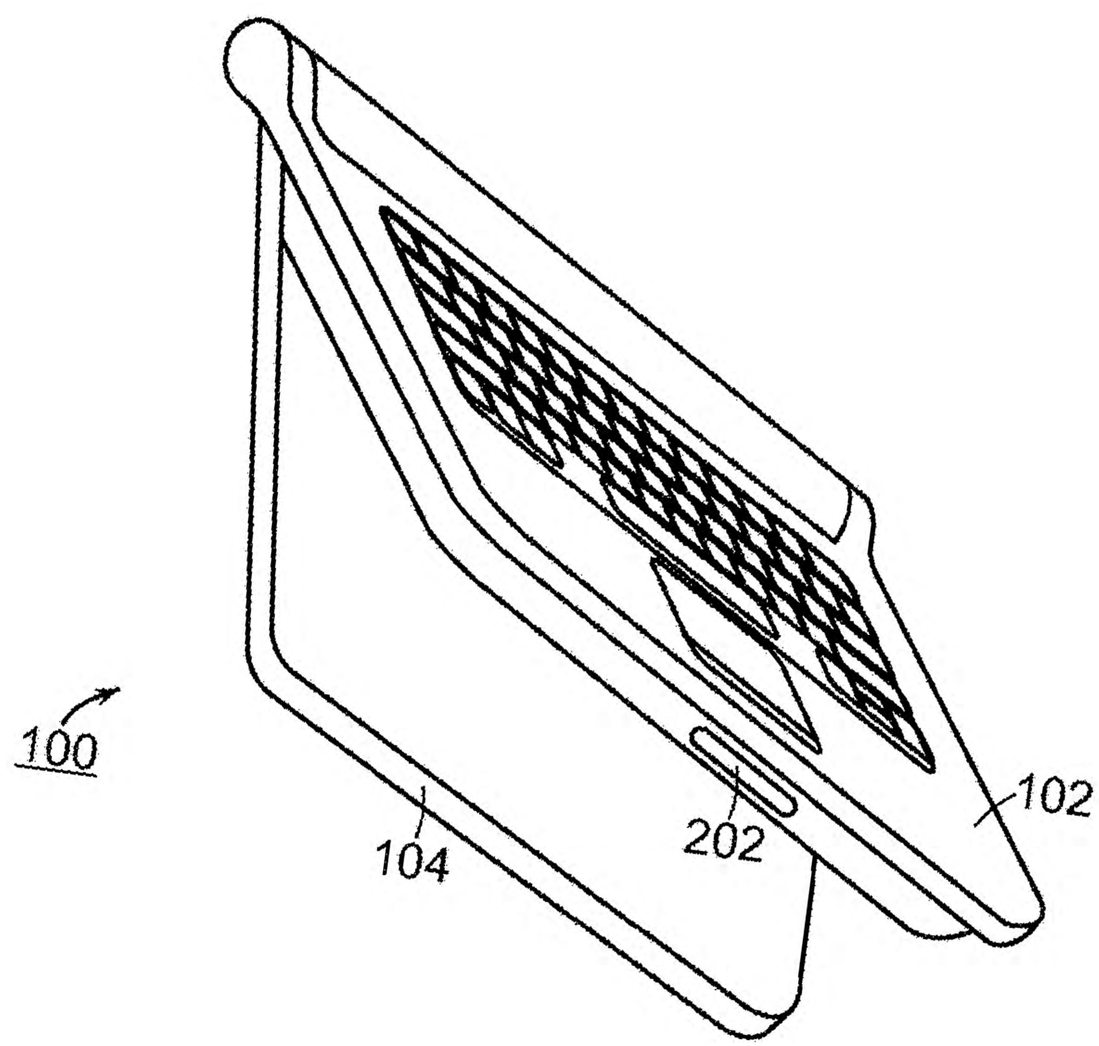

FIG. 24

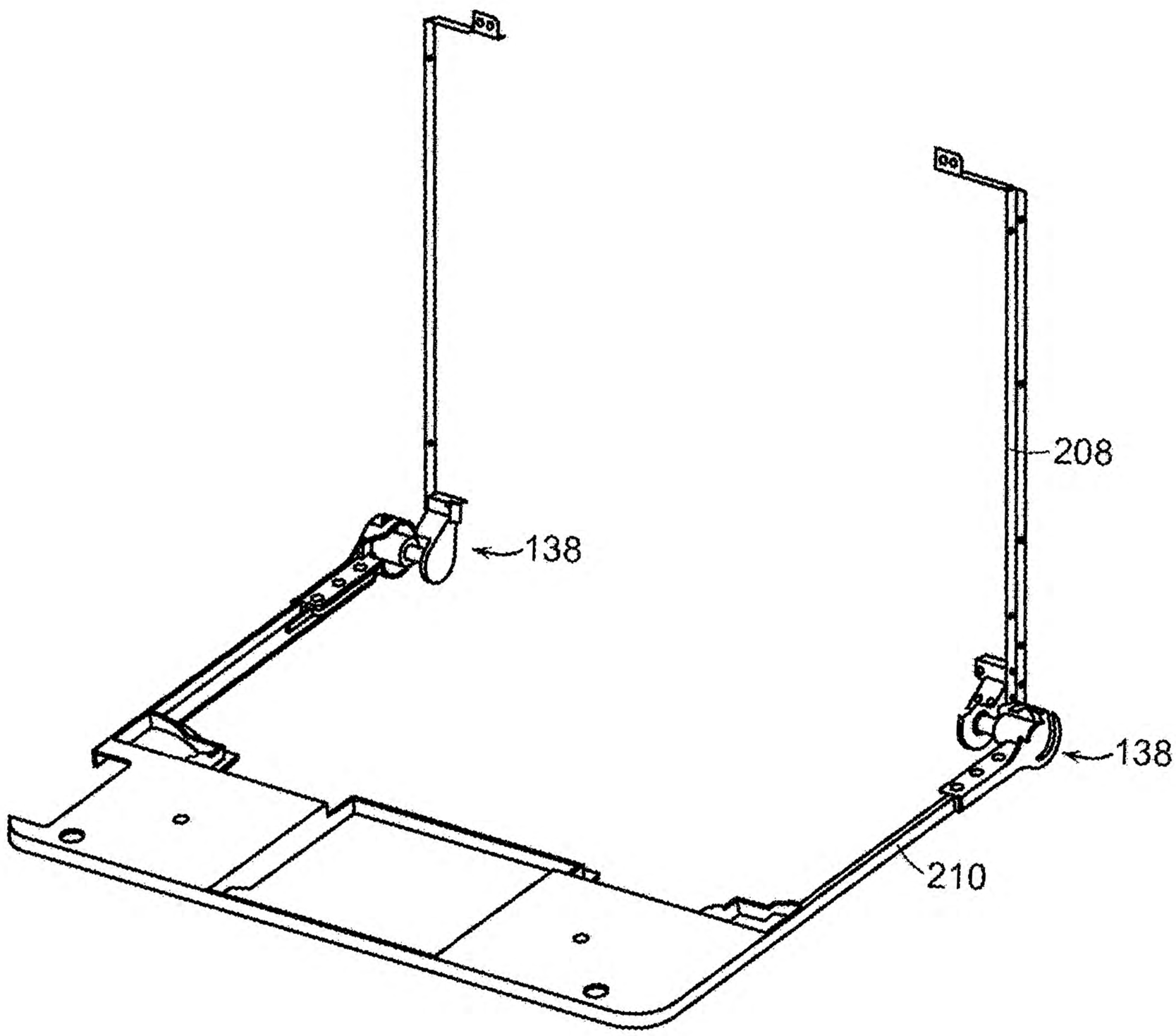

FIG. 25

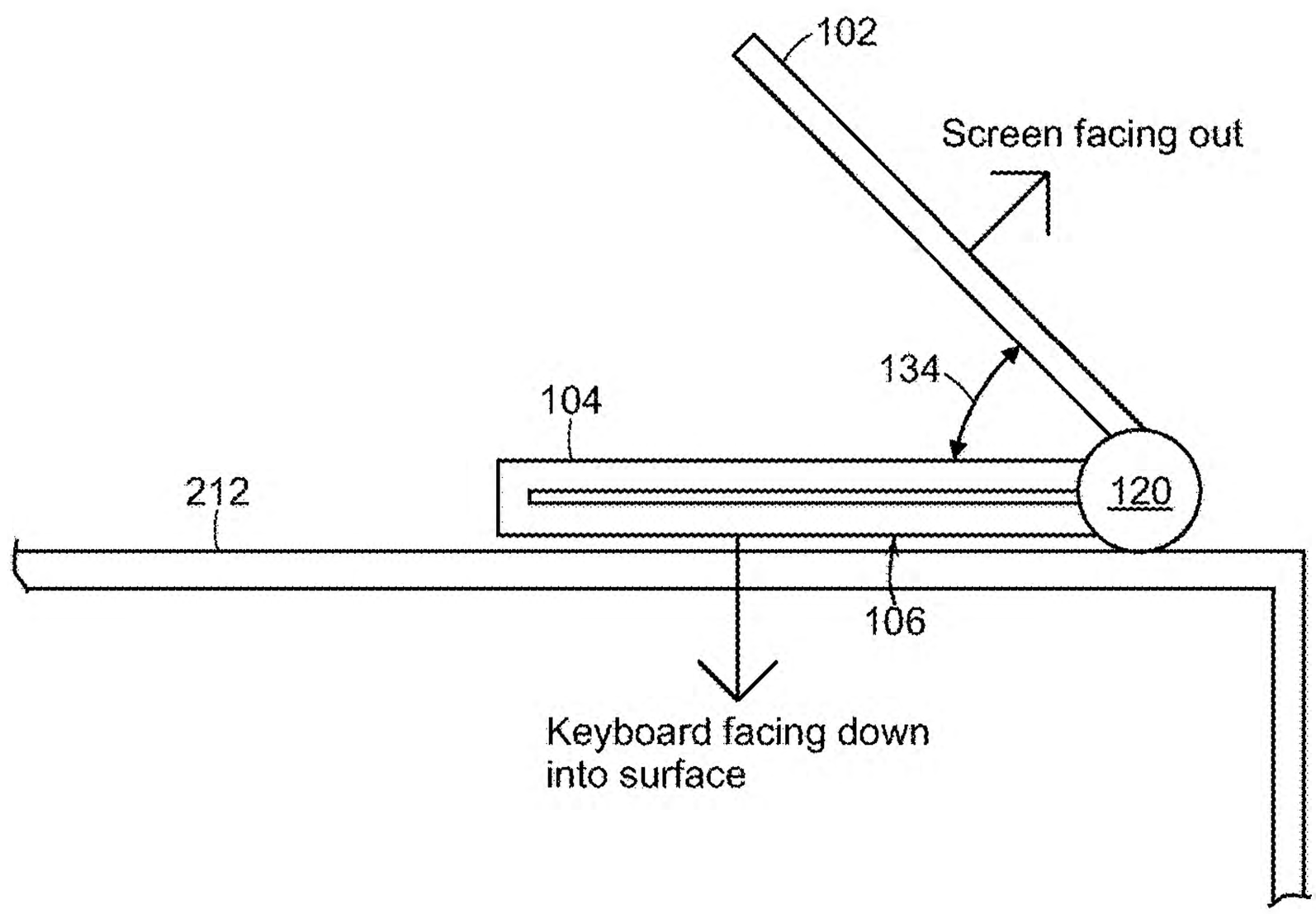
102
Screen facing out
134
104
120
212
106
Keyboard facing down
into surface

FIG. 26

Case 1:23-cv-00121-RGA Document 18-1 Filed 05/08/23 Page 150 of 528 PageID #: 956

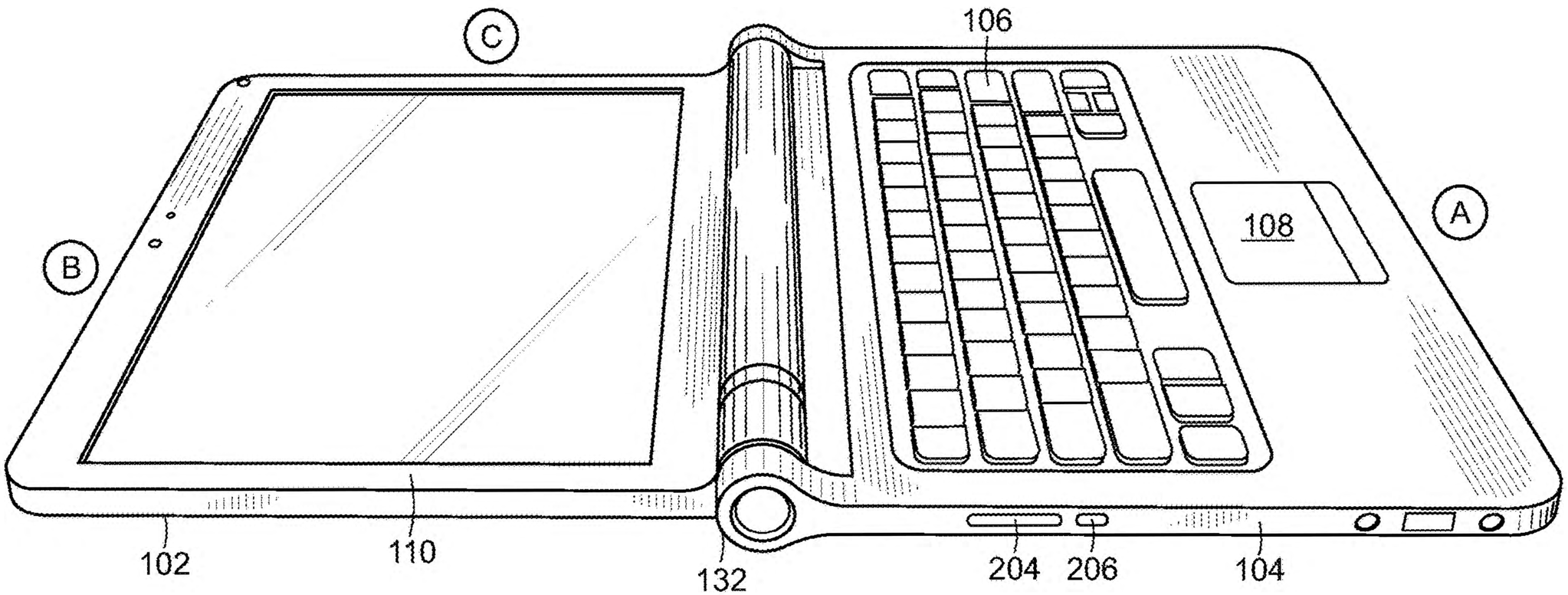

FIG. 27

PORTABLE COMPUTER WITH MULTIPLE DISPLAY CONFIGURATIONS

RELATED APPLICATIONS

This application is a continuation of and claims priority under 35 U.S.C. § 120 to U.S. application Ser. No. 15/394,492, titled "PORTABLE COMPUTER WITH MULTIPLE DISPLAY CONFIGURATIONS," filed Dec. 29, 2016, which is a continuation of and claims priority under 35 U.S.C. § 120 to U.S. application Ser. No. 13/651,636, titled "PORTABLE COMPUTER WITH MULTIPLE DISPLAY CONFIGURATIONS," filed Oct. 15, 2012, which is a continuation of and claims priority under 35 U.S.C. § 120 to U.S. application Ser. No. 12/170,939, titled "PORTABLE COMPUTER WITH MULTIPLE DISPLAY CONFIGURATIONS," filed Jul. 10, 2008, which claims priority under 35 U.S.C. § 119(e) to U.S. Provisional Patent Application No. 61/041,365, titled "PORTABLE COMPUTER WITH MULTIPLE DISPLAY CONFIGURATIONS," filed Apr. 1, 2008, each of which is incorporated herein by reference in its entirety. U.S. application Ser. No. 13/651,636, titled "PORTABLE COMPUTER WITH MULTIPLE DISPLAY CONFIGURATIONS," filed Oct. 15, 2012, is also a continuation of and claims priority under 35 U.S.C. § 120 to U.S. application Ser. No. 12/170,951, titled "PORTABLE COMPUTER WITH MULTIPLE DISPLAY CONFIGURATIONS," filed Jul. 10, 2008, which claims priority under 35 U.S.C. § 119(e) to U.S. Provisional Patent Application No. 61/041,365, titled "PORTABLE COMPUTER WITH MULTIPLE DISPLAY CONFIGURATIONS," filed Apr. 1, 2008, each of which is incorporated herein by reference in its entirety.

BACKGROUND

Field of Invention

The present invention relates generally to portable computers and, more particularly, to a portable computer that is configurable into different functional and positional modes.

Discussion of Related Art

Portable computers, such as laptop computers or notebook computers, have become increasingly popular and ubiquitous in the home and workplace. Conventional portable computers most commonly have a "clam-shell" configuration, with a base including the keyboard, various ports, connectors and/or inputs (e.g., for power and connecting peripheral devices), and the majority of the electrical components (e.g., the central processing unit and memory), and a display component pivotably coupled to the base by a hinge. The display component is movable about the hinge between a closed position, with the display screen positioned adjacent the keyboard, and an open position, with the display screen inclined at a desired viewing angle.

Some portable computers are able to accept user inputs via a touch screen in addition to via conventional tools, such as a keyboard or mouse. The use of a touch screen to input data is sometimes referred to as operating in "tablet mode" because the computer is being used in a manner similar to a tablet of paper. U.S. Pat. No. 6,771,494 discloses a hybrid tablet-type portable computer that is capable of operating either as a normal laptop computer receiving user input via a keyboard ("laptop mode"), or as a tablet computer receiving user input via a touch screen. The '494 patent further discloses that the display component of the computer is attached to the base of the computer by hinges that allow the display to be tilted relative to the base (for laptop mode), and to be rotated and folded against the base to configure the computer into tablet mode.

Another variation of a portable computer with a moveable display is disclosed in U.S. Pat. No. 6,266,236. The '236 patent discloses a computer including a base, a display member and an arm assembly coupling the display member to the base. According to the '236 patent, the arm assembly allows pivotable movement of the display member between a plurality of positions, including a notebook mode configuration, a tablet mode configuration, a presentation mode configuration, and a closed mode.

SUMMARY OF INVENTION

Aspects and embodiments of the present invention are directed to a portable computer that is configurable between a laptop mode (in which the portable computer has a conventional laptop appearance) and an easel mode in which the base of the computer and its display component stand upright forming an inverted "V," as discussed further below. The display component is pivotably coupled to the base of the portable computer by a hinge that allows the display component to be rotated or tilted about a longitudinal axis running along an interface between the base and the display component. Unlike the computers discussed in U.S. Pat. Nos. 6,266,236 and 6,771,494 above, the portable computer according to embodiments of the invention does not require an arm assembly, nor multiple, different hinge assemblies to be configured into the different modes. Furthermore, the portable computer according to embodiments of the invention is capable of different display modes and different functionality in the different configurations, as discussed below.

Further aspects and embodiments are directed to a portable computer having an embedded scroll wheel that can be configured to allow a user to control various features and functionality of the portable computer. For example, as discussed further below the scroll wheel can be used to navigate among information displayed on the portable computer's display and/or to alter operating modes of the portable computer, and/or to control features such as volume, display brightness, etc.

According to one embodiment, a portable computer is configurable between various modes, including a closed mode, a laptop mode, an easel mode, a flat mode and a frame mode. The portable computer may comprise a display component including a display screen, a base, and a hinge assembly at least partially housed within the base and configured to pivotably couple the display component to the base. The display component may be rotatable about a longitudinal axis running along an interface between the display component and the base. In the closed mode, the display screen may be disposed substantially against the base, and rotating the display component about the longitudinal axis up to approximately 180 degrees from the closed mode may configure the portable computer into the laptop mode. Rotating the display component about the longitudinal axis beyond approximately 180 degrees axis from the closed mode may configure the portable computer into the easel mode.

In one example of the portable computer, the display component is rotatable about the longitudinal axis up to approximately 320 degrees from the closed mode. In another example, the portable computer comprises a display orientation module that displays content on the display screen in one of a plurality of orientations relative to the longitudinal

axis. The orientation of the displayed content may be dependent on the current display mode of the portable computer, or may be configurable responsive to a user input. The portable computer may further comprise a mode sensor which detects a current display mode of the portable computer, and the display orientation module may display content on the display screen in an orientation dependent on the current display mode detected by the mode sensor. Depending on the hinge assembly used, the longitudinal axis may comprises multiple parallel axes, and the hinge assembly may be configured to permit rotation of the display component about any of the multiple parallel axes to configure the portable computer between the plurality of display modes.

Another embodiment is directed to a portable computer comprising a base, a display component rotatably coupled to the base, and means for rotating the display component in a single direction relative to the base to configure the portable computer between a laptop mode and an easel mode.

In another embodiment of a portable computer configurable between multiple modes including a laptop mode and an easel mode, the portable computer comprises a display component, a base, and a hinge assembly configured to rotatably couple the display component to the base. The hinge assembly may be configured to permit rotation of the display component about a single axis to configure the portable computer between the laptop mode and the easel mode. In one example, the single axis is a longitudinal axis running along an interface between the display component and the base. The portable computer may further comprise a scroll wheel disposed at least partially about the longitudinal axis. In one example, the display component comprises a display screen, and the scroll wheel is configured to permit a user to manipulate content displayed on the display screen.

Another embodiment is directed to a method of automatically orienting content displayed on a portable computer. The method comprises rotating a display component of the portable computer about a longitudinal axis running along an interface between the display component and a base of the portable computer, detecting a degree of rotation of the display component relative to the base, providing a signal representative of the degree of rotation of the display component, and automatically configuring an orientation, relative to the longitudinal axis, of the content displayed on the portable computer responsive to the signal.

According to another embodiment, a portable computer comprises a base unit, a display unit including a display screen configured to display content, an orientation sensor which detects an orientation of the display unit relative to the base unit, and a display orientation module which orients the content displayed on the display screen responsive to the orientation detected by the orientation sensor.

Another embodiment of a portable computer comprises a base, a display component rotatably coupled to the base such that the display component and the base are rotatable with respect to one another about a longitudinal axis running along an interface between the display component and the base, the display component including a display screen, and a scroll wheel disposed at least partially within the base and rotatable about the longitudinal axis, the scroll wheel configured to permit a user to control at least one of operating parameters of the portable computer and content displayed on the display screen. In one example, the scroll wheel is configured to permit the user to adjust a volume of sound produced by the portable computer. In another example, the screen is configured to display at least one of a plurality of modes of content, and the scroll wheel is configured to permit the user to select a mode of content for display by the portable computer. The portable computer may further comprise one or more navigation buttons that may be used in conjunction with the scroll wheel to control aspects of the portable computer and displayed content.

According to another embodiment, a portable computer is configurable between a plurality of display modes including a laptop mode and an easel mode, the portable computer comprising a base, a display component rotatably coupled to the base and including a screen which displays content, and a scroll wheel accessible in each of the plurality of display modes and configured to permit a user to manipulate at least one of operating parameters of the portable computer and the content displayed on the screen. In one example, the scroll wheel is disposed at least partially about an axis of rotation of the display component relative to the base.

In another embodiment, a portable computer comprises a base, a display component including a screen configured to display content, a hinge assembly configured to rotatably couple the display component to the base and to permit rotation of the display component about a longitudinal axis running along an interface between the display component and the base, and a scroll wheel disposed at least partially about the longitudinal axis.

Still other aspects, embodiments, and advantages of these exemplary aspects and embodiments, are discussed in detail below. Moreover, it is to be understood that both the foregoing information and the following detailed description are merely illustrative examples of various aspects and embodiments, and are intended to provide an overview or framework for understanding the nature and character of the claimed aspects and embodiments. Any embodiment disclosed herein may be combined with any other embodiment in any manner consistent with the objects, aims, and needs disclosed herein, and references to "an embodiment," "some embodiments," "an alternate embodiment," "various embodiments," "one embodiment" or the like are not necessarily mutually exclusive and are intended to indicate that a particular feature, structure, or characteristic described in connection with the embodiment may be included in at least one embodiment. The appearances of such terms herein are not necessarily all referring to the same embodiment. The accompanying drawings are included to provide illustration and a further understanding of the various aspects and embodiments, and are incorporated in and constitute a part of this specification. The drawings, together with the remainder of the specification, serve to explain principles and operations of the described and claimed aspects and embodiments.

BRIEF DESCRIPTION OF THE DRAWINGS

Various aspects of at least one embodiment are discussed below with reference to the accompanying figures, which are not intended to be drawn to scale. Where technical features in the figures, detailed description or any claim are followed by references signs, the reference signs have been included for the sole purpose of increasing the intelligibility of the figures, detailed description, and claims. Accordingly, neither the reference signs nor their absence are intended to have any limiting effect on the scope of any claim elements. In the figures, each identical or nearly identical component that is illustrated in various figures is represented by a like numeral. For purposes of clarity, not every component may be labeled in every figure. The figures are provided for the purposes of illustration and explanation and are not intended as a definition of the limits of the invention. In the figures:

FIG. **1** is an illustration of one example of a portable computer, according to aspects of the invention, in a "laptop" configuration;

FIG. **2** is a view of the portable computer of FIG. **1** in the closed position;

FIG. **3** is a plan view of the exterior of the bottom of the portable computer of FIG. **1**;

FIG. **4** is a perspective view of the portable computer of FIG. **1** in the easel mode;

FIG. **5** is a side view of the portable computer of FIG. **4**, illustrating the adjustable angle of the easel mode;

FIGS. **6**A-C are diagrams illustrating different positions of the portable computer of FIG. **4** in easel mode;

FIG. **7**A is an illustration of a portion of the portable computer of FIG. **1** in the laptop mode, illustrating a hinge assembly according to aspects of the invention;

FIG. **7**B is an in illustration of a portion of the portable computer of FIG. **1** in the easel mode, illustrating the hinge assembly according to aspects of the invention;

FIG. **8** is a diagram of one example of the hinge assembly of FIGS. **7**A and **7**B;

FIG. **9** is a cross-sectional diagram of a portion of the hinge assembly of FIG. **8**, taken along line **9-9** in FIG. **8**;

FIG. **10** is an exploded view of the hinge assembly of FIG. **8**;

FIG. **11** is a block diagram of one example of a portable computer user interface architecture, according to aspects of the invention;

FIG. **12** is a screen shot illustrating one example of a graphical user interface, according to aspects of the invention;

FIG. **13** is a screen shot illustrating another example of a graphical user interface according to aspects of the invention;

FIG. **14** is an illustration of a user adjusting the scroll wheel on a portable computer in the easel mode, according to aspects of the invention;

FIG. **15** is an illustration of a user pressing the scroll wheel on a portable computer, according to aspects of the invention;

FIG. **16** is an illustration of a user pressing a navigation button on the portable computer, according to aspects of the invention;

FIG. **17** is an illustration of an example of the portable computer in the laptop mode, according to aspects of the invention;

FIG. **18** is a view of a portion of the portable computer illustrating a wireless signal indicator feature, according to aspects of the invention;

FIG. **19** is a view of a portion of the portable computer in the closed position, according to aspects of the invention;

FIG. **20** is a plan view of one example of a power adaptor, according to aspects of the invention;

FIG. **21** is a side view of the power adaptor of FIG. **20**;

FIG. **22**A is another side view of the power adaptor of FIG. **20**, illustrating the power cord would around a cord spool, according to aspects of the invention;

FIG. **22**B is a plan view of the power adaptor of FIG. **22**A;

FIG. **23** is an illustration of the portable computer coupled to a docking station, according to aspects of the invention;

FIG. **24** is an illustration of the portable computer showing one example of a docking connector, according to aspects of the invention;

FIG. **25** is an illustration of a hinge assembly coupled to a computer frame, according to aspects of the invention;

FIG. **26** is an illustration of the portable computer configured into a "frame" mode, according to aspects of the invention; and

FIG. **27** is an illustration of the portable computer configured into a "flat" mode, according to aspects of the invention.

DETAILED DESCRIPTION

Aspects and embodiments are directed to a portable computer that is configurable between different operating modes, including a laptop mode (in which the portable computer has a conventional laptop appearance), a flat mode, a frame mode, and an easel mode in which the base of the computer and its display component stand vertically forming an inverted "V," as discussed further below. The portable computer is capable of different display formats and functionality in the different modes, and includes a graphical user interface that may work seamlessly with the computer hardware to provide a unified, comfortable, holistic user experience. In particular, the portable computer may provide access to a wide array of functions, both those traditionally provided by computing devices and those traditionally provided by other passive information devices. For example, the hardware and software, including the graphical user interface, of the portable computer may be focused toward providing access to entertainment media, such as audio and video (e.g., playing music, streaming video, viewing photographs, etc.), email, and internet, while also providing state-of-the-art computer processing capability.

It is to be appreciated that embodiments of the methods and apparatuses discussed herein are not limited in application to the details of construction and the arrangement of components set forth in the following description or illustrated in the accompanying drawings. The methods and apparatuses are capable of implementation in other embodiments and of being practiced or of being carried out in various ways. Examples of specific implementations are provided herein for illustrative purposes only and are not intended to be limiting. In particular, acts, elements and features discussed in connection with any one or more embodiments are not intended to be excluded from a similar role in any other embodiments. Also, the phraseology and terminology used herein is for the purpose of description and should not be regarded as limiting. Any references to embodiments or elements or acts of the systems and methods herein referred to in the singular may also embrace embodiments including a plurality of these elements, and any references in plural to any embodiment or element or act herein may also embrace embodiments including only a single element. References in the singular or plural form are not intended to limit the presently disclosed systems or methods, their components, acts, or elements. The use herein of "including," "comprising," "having," "containing," "involving," and variations thereof is meant to encompass the items listed thereafter and equivalents thereof as well as additional items. References to "or" may be construed as inclusive so that any terms described using "or" may indicate any of a single, more than one, and all of the described terms.

Referring to FIG. **1**, there is illustrated one example of a portable computer according to aspects of the invention. In FIG. **1**, the portable computer **100** is illustrated in the "laptop" mode, with the display component **102** inclined at a viewing angle from the base **104**. The display component **102** is pivotably coupled to the base **104** by a hinge assembly (not shown) that allows the display component to be rotated

with respect to the base. The hinge assembly may include a single or multiple hinges, which may be any of a variety of hinge types, including, but not limited, to single-axis hinges, multiple-axis hinges, geared hinges, etc. In one example, the hinge assembly allows the display component **102** to be rotated (or tilted) about a longitudinal axis **101** running along an interface between the display component and the base **104**, as illustrated in FIG. **1** and discussed further below. The base **104** includes a keyboard **106** and internal electronic components (not shown), such as a central processing unit, memory, and other components necessary to operate the portable computer, as known to those skilled in the art. In some embodiments, the base **104** may also include a touch pad **108** or trackball (not shown) for receiving user commands, as known to those skilled in the art.

Still referring to FIG. **1**, the display component **102** includes a display screen **110**, and may also include a camera **112**, microphone **114**, and infrared receiver **116**, as discussed further below. It is to be appreciated that the locations of the camera **112**, microphone **114** and infrared receiver **114** are not limited to the example illustrated in FIG. **1**, and may be placed in other locations on the display component **102** and/or base **104**, as would be recognized by those skilled in the art. The display component **102** may also include cushions **118** that provide soft contact points between the base **104** and the display component **102** when the portable computer is closed. In one example, the cushions **118** are made of rubber. However, it is to be appreciated that the invention is not so limited, and the cushions **118** may comprise materials other than rubber, including, for example, a polymer, felt, or other suitable materials as would be recognized by those skilled in the art.

Referring to FIG. **2**, there is illustrated a side view of the portable computer **100** of FIG. **1** in the closed configuration. As is the case for conventional clam-shell type portable computers, when the portable computer **100** is closed, the display screen is disposed "face down" against the keyboard of the base **104**. In the illustrated embodiment, the base **104** includes a rounded portion **120** that houses the hinge (not shown) that pivotably couples the display component **102** to the base, as discussed further below. It is to be appreciated that the rounded portion **120** is not limited to having a round shape, but may instead have another shape, which may be dependent on the type of hinge used. In one embodiment, a power button **122**, configured to turn the portable computer ON and OFF, may also be provided on the rounded portion **120**, as illustrated in FIG. **2**. However, it is to be appreciated that the invention is not so limited, and the power button **122** may be located elsewhere on the base **104**. In one example, the power button **122** may be slightly recessed relative to the surface of the base **104**, so as decrease the potential for the power button to be accidentally pressed.

An exterior view of the bottom of the base **104** (the underside of the portable computer **100**) is illustrated in FIG. **3**. As can be seen in FIG. **3**, in one embodiment, the base **104** includes a plurality of feet **124**. In one example, the feet **124** are made of rubber; however, it is to be appreciated that the invention is not so limited and the feet may be made of another material, such as, for example, a polymer or felt. A ventilation slit **126** may be provided near an interface between the base **104** and the display component **102**, as illustrated, or elsewhere as may be desired, to allow heat to dissipate from the internal electronic components in the base. The base **104** may also include one or more speakers **128**. In one example, the base **104** includes two stereo speakers **128**, positioned at either side of the base, as illustrated in FIG. **3**; however, it is to be appreciated that the portable computer **100** may comprise more or fewer speakers which may be placed at any location on the base **104**. A scroll wheel **132** may be provided to allow a user to control certain functionality of the portable computer **100**, such as navigating web pages, controlling speaker volume, selecting programs, etc., as discussed further below.

According to one embodiment, the base **104** may comprise a cushioning strip **130** disposed along an edge of the base **104** opposite to the interface between the display component **102** and the base, as illustrated in FIG. **3**. The cushioning strip **130**, which may comprise rubber, a polymer, or another suitable material, may serve as a "foot" when the portable computer is configured into the easel mode, as discussed further below. In one embodiment, the display component **102** may be provided with a similar cushioning strip that may serve as a second supporting foot when the portable computer is configured into the easel mode.

Referring to FIG. **4**, there is illustrated an example of the portable computer **100** configured into the easel mode. To convert the portable computer **100** from the laptop mode (or closed position) into the easel mode, the display component **102** may be folded away from the base **104**, in the same direction as to open the computer (i.e., to configure the computer from the closed position into the laptop mode) such that the base **104** and the display component **102** form an inverted "V" shape with the bottom of the base and the back of the display component face another, as illustrated in FIG. **4**. In the easel mode, the display screen **110** is visible and accessible on one side of the portable computer **100** and the keyboard **106** (not shown in FIG. **4**) is visible and accessible on the other side.

As illustrated in FIG. **4**, in one embodiment, the portable computer may comprise integrated hardware volume controls, including a volume control button **204** and a mute button **206**. In one example, the volume control button **204** may be a rocker switch that allows a user to easily increase or decrease the volume of audio played through the speakers **128**. When the user presses the volume control button **204**, a volume indicator may temporarily appear on the display screen **110**, to provide a visual indication of the amount by which the volume is being increased or decreased. Similarly, pressing the mute button **206** may cause a visual indication that the volume is muted to appear on the display screen **110**.

According to one embodiment, when the portable computer **100** is configured into the easel mode, the visual display on the display screen **110** is automatically rotated 180 degrees such that the information appears "right-way-up," even through the display screen is upside-down compared to when the portable computer is in the laptop mode. Thus, a user may simply "flip" the portable computer **100** into the easel mode and immediately be able to comfortably view information on the display screen **110**, without having to access display screen controls to adjust the orientation of the visual display. In one embodiment, the portable computer **100** includes an orientation (or mode) sensor that is configured to detect whether the portable computer is in the laptop mode or the easel mode, and to adjust the display accordingly. The orientation sensor may be incorporated into the base component **104**, for example, underneath the keyboard **106**, or into the display component. In one example, locating the orientation sensor in the display component **102**, rather than the base **104**, may provide more robust detection and therefore, may be presently preferred in some embodiments. The orientation sensor may be used to determine a precise relative orientation of the base component **104** with respect to the display component **102**, or vice versa, for example, to determine whether the device is in the

laptop mode, easel mode, or some point in between the two modes. In one example, the orientation sensor includes an accelerometer whose output is fed to the computer operating system (or to dedicated logic circuitry) which then triggers a display inversion as appropriate.

Accelerometers have been used in portable devices such as cellular phones, media players or computers, as sudden motion sensors, or "drop detectors," to protect against hard drive crashes in the event that the device is dropped. By contrast, however, the accelerometer in the portable computer according to an embodiment of the invention is not used to detect motion of the overall computer, but rather to detect a configuration of the portable computer **100** (e.g., laptop mode or easel mode), particularly, to detect an orientation of the display component **102** relative to the base component **104**. In one example, information from the accelerometer is provided to a display controller in the portable computer and used to switch the display between portrait or landscape mode, as is done in some conventional devices.

Referring to FIG. **5**, when the portable computer **100** is in the easel mode, the base **104** is disposed at an angle **134** to the display component **102**. This angle **134** is adjustable, for example, to allow a comfortable viewing angle to the display screen **110** to be maintained for different positions of a user **136** and of the portable computer **100**, as illustrated in FIGS. **6**A, **6**B and **6**C. For example, when the user **136** is further from the portable computer, the angle **134***a* (FIG. **6**A) may be made smaller than the angle **134***b* when the user is closer to the portable computer (FIG. **6**B). As discussed above, in one example, the orientation sensor (not shown) may be used to detect, either approximately or precisely, the angle **134** and to provide the information to the computer operating system.

According to one embodiment, the display component **102** is pivotably coupled to the base **104** by a hinge that allows the display component to be moved relative to the base so as to allow the portable computer **100** to be configured into the closed position, the laptop mode or the easel mode. As discussed above, in conventional "clamshell" type portable computers, the hinges that couple the display component to the base generally do not permit more than about 180 degrees of rotation of the display component. Thus, these conventional portable computers can be in a closed position or open, laptop configuration, but cannot be configured into an easel mode because the conventional hinges do not permit sufficient movement of the display component. Similarly, the tablet-type portable computers discussed above have displays that can be opened, rotated and folded such that they lie flat against the keyboard on the base, but cannot be configured into an easel mode. Although, as discussed above, U.S. Pat. No. 6,266,236 discloses a computer that is configurable into a presentation mode, this requires a complex arm assembly. By contrast, the portable computer according to embodiments of the present invention may be configured into the easel mode by simply continuing to tilt or rotate the display component past the "laptop positions" until a desired easel angle **134** is reached.

Referring to FIGS. **7**A and **7**B, there is illustrated a portion of the portable computer **100** illustrating a hinge assembly **138** that allows the portable computer to be configured into either the laptop mode (FIG. **7**A) or the easel mode (FIG. **7**B), according to aspects of the invention. According to one embodiment, the hinge assembly **138** accommodates 0-320 degrees of rotation, allowing a minimum angle **134** (see FIG. **5**) of 40 degrees. However, it is to be appreciated that the hinge assembly **138** may allow greater or fewer degrees of rotation, provided only that sufficient rotation is allowed so as to configure the portable computer **100** into either the laptop mode or the easel mode. As discussed above, in one embodiment the portable computer **100** includes an orientation sensor (not shown) that is configured to detect a relative orientation of the display component **102** and the base component **104**. In one example, the orientation sensor may be an accelerometer incorporated into the base component **104**, as discussed above. Alternatively, the orientation sensor may be incorporated into the hinge assembly **138** and may be used to detect movement of the hinge assembly, and to translate that movement into an information about the relative orientation of the display component **102** and the base component **104** (for example, a size of the angle **134**). It is also to be appreciated that the orientation sensor may include electronic or mechanical components, or a combination thereof. For example, the hinge assembly may be provide with detents that provide an indication of the mode of the portable computer.

As discussed above, and also illustrated in FIGS. **7**A and **7**B, the portable computer may also comprise a scroll wheel **132** that allows a user to adjust, control and/or select various aspects of the portable computer (e.g., wireless capability or speaker volume) or items displayed on the display screen **110**. A housing **160** may contain or support various mechanical and/or electronic components (not shown) that are coupled to the scroll wheel **132** and are configured to convert physical movement of the scroll wheel into electrical signals. These electrical signals may be provided to the central processing unit of the portable computer **100** which processes the electrical signals so as to translate movement of the scroll wheel into control of a selected feature, for example, adjusting the volume of the speaker(s) or selecting a particular item displayed on the display screen, as discussed further below.

One embodiment of the hinge assembly **138** is illustrated in FIG. **8**. The hinge assembly includes a bracket **140** rotatably coupled to a housing **142**. The housing **142** may include a first flange **144** that may be fastened to an internal frame in the base **104**, as illustrated in FIG. **7**A. The first flange **144** may include holes **146** to allow the first flange to be fastened to the base **104** using fasteners, such as, for example, screws, rivets or bolts. The bracket **140** may include a second flange **148** that may be similarly coupled to the display component **102** using fasteners **150**. In one embodiment, the display screen **110** (see FIG. **1**) may be an LCD screen. As known to those skilled in the art, an LCD screen generally comprises a frame and plastic housing. In one example, the second flange **148** may be fastened to either or both of the display screen frame and the screen's plastic housing. Referring to FIG. **25**, there is illustrated an example of two hinge assemblies **138** coupled to the display frame **208** of the display component, and to the base frame **210** of the base component **104**. According to one embodiment, the bracket **140** and/or housing **142** may be formed of cast zinc. However, it is to be appreciated that other materials, including other metals, may be used, and the bracket **140** and/or housing **142** may be formed using a procedure other than casting, such as, for example, machining or molding.

Referring again to FIG. **8**, in one embodiment, the hinge assembly **138** may also incorporate an area **152** for locating the power button (FIG. **2**, **122**) or a navigation control button (FIG. **4**, **166**), as discussed further below.

Referring to FIG. **9**, there is illustrated a cross-sectional view of a portion of the hinge assembly **138** taken along line

A-A in FIG. **8**. As shown in FIG. **9**, in one embodiment the hinge assembly **138** comprises a shaft **154** located within the hinge housing **142**. The shaft **154** may be held in position within the hinge housing **142**, and rotatably coupled to the housing, by torsion elements, such as springs **156**. In one example, the springs **156** may be formed by stamping; however, it is to be appreciated that other methods of manufacture may be used. In one example, the hinge assembly may accommodate about 320 degrees of rotation, as discussed above, and may provide about 6.5 in-lbs in symmetric torque.

FIG. **10** is an exploded view of the hinge assembly of FIGS. **8** and **9**. As shown in FIG. **10**, the shaft **154** is coupled to a member **158**. This member **158** may be integral with or coupled to the bracket **140** which is, in turn, fastened to the display component, as discussed above. Thus, the shaft **154** and springs **156** provide a rotatable coupling between the fixed elements of the hinge assembly, namely, the hinge housing **142** and bracket **140** which are fastened to the base **104** and display component **102** of the portable computer. In this manner, the hinge assembly allows the display component **102** to be moved relative to the base **104**, thereby allowing the portable computer to be easily and quickly configured into any of the closed position, laptop mode or easel mode. For example, simply rotating or tilting the display component about the longitudinal axis **101** (see FIG. **1**) up to approximately 180 degrees from the closed mode configures the portable computer into the laptop mode, and rotating the display component about the longitudinal axis **101** beyond approximately 180 degrees axis from the closed mode configures the portable computer into the easel mode.

According to one embodiment, the portable computer may include integrated "navigation" hardware that allows a user to easily and comfortable control various features and functions of the portable computer, and to manipulate content displayed on the portable computer. For example, as discussed above, the portable computer **100** may comprise a scroll wheel **132** that allows a user to control, adjust and/or select various functionality of the portable computer. According to another embodiment, the scroll wheel **132** may be used to provide "hardware navigation" through information, such as menus, icons, etc., displayed on the display screen **110**, as discussed further below with reference to FIG. **17**. A common display configuration used in conventional computers is a "desktop" view in which multiple icons representing links to various programs or applications are displayed over a background image. Navigation is conventionally performed using a mouse, touch pad or trackball, as known to those skilled in the art. In one embodiment, the portable computer **100** may display information on the display screen **110** in the conventional desktop configuration, and navigation may be performed using either conventional tools, such as a touchpad **108**, trackball (not shown) or peripheral, for example, a mouse, that is connected to the portable computer **100** via a port **164**, or the scroll wheel **132**, or a combination thereof. According to another embodiment, the portable computer **100** includes a streamlined graphical user interface that supports "map" navigation. The map user interface provides a clear overview of the entire computing environment and searching capability within the environment that may be accessed using the scroll wheel **132** and, optionally, one or navigation buttons **166**, **168** that may be provided on the base **104** of the portable computer **100** (button **166**) and/or in the keyboard **106** (button **168**), illustrated in FIG. **17**. In one embodiment, the map mode of navigation is a hierarchical mode that reduces the number of items to select amongst at any stage of navigation, thereby facilitating user access with the scroll wheel **132** and, optionally, the navigation button(s) **166**, **168**. Of course, it is to be appreciated that the map user interface may also be navigated using conventional tools, such as a trackball, touchpad, mouse or arrow keys.

Referring to FIG. **11**, there is illustrated a block diagram of one example of an architecture of the portable computer including a map user interface. The user interface "home" screen **170** that displays a plurality of modes of content **172**. In the illustrated example, the home screen **170** contains five modes of content **172**; however, it is to be appreciated that the home screen may include more or fewer than five modes of content and that the modes of content may differ from the examples discussed below. According to one example, the modes of content **172** accessible via the home screen **170** may include "media" **172***a*, "connect" **172***b*, "web" **172***c*, "applications" **172***d*, and "channels" **172***e*. Using the map user interface, information, programs, features and applications may be grouped into the various modes of content **172**. By selecting any mode of content **172**, for example, by using the scroll wheel **132** and/or navigation buttons **166**, **168**, as discussed further below, the user may access the content organized within that mode. For example, the media mode **172***a* may provide access to a medial player to play, view, search and organize media such as music, video, photos, etc. The connect mode **172***b* may provide access to features such as, for example, email, voice-over-IP, instant messaging, etc., and the web mode **172***c* may provide access to internet browsing and searching. The application mode **172***d* may provide access to, for example, computer applications or programs, such as word processor, spreadsheet, calculator, etc. In one example, these applications or programs may be provided as web-based services rather than programs or applications residing on the portable computer **100**. The channels mode **172***e* may provide access to different functionality of the portable computer, with the different functions or features defined as different channels. For example, a channel may include an alarm clock channel in which the portable computer is configured to display a clock and can be programmed to activate an alarm, e.g., a sound, piece of music, etc., at a predetermined time. Another example of a channel may include a "photo frame" channel in which the portable computer may be configured to display a preselected image or set of images, etc. Another example of a channel is a "television" channel, in which the portable computer is configured to stream Internet television. In one example, a user may configure particular Internet television channels (e.g., a news channel, a movie channel, a home and garden channel, etc.) into sub-channels within the channels mode of content **172**(*e*). Some or all of the modes of content **172** may access, retrieve and/or store information on the Internet **174**.

According to one embodiment, the different modes of content **172** may be displayed as a series of bars across the display screen **110**, as illustrated in FIG. **12**. The following discussion of various features, including hardware navigation through the map user interface may refer primarily to the display configuration illustrated in FIG. **12**. However, it is to be appreciated that the invention is not so limited, and the modes of content may be displayed in other configurations, including, for example, a "desktop" and icon configuration, a "dashboard" type display, as illustrated in FIG. **13**, or another configuration, as would be recognized by those skilled in the art. Similarly, navigation is discussed below primarily with reference to the scroll wheel **132** and navigation buttons **166**, **168**; however, it is to be appreciation

that navigation may also be accomplished using any of the conventional tools discussed above or known to those skilled in the art.

As discussed above, according to one embodiment, the scroll wheel **132** and, optionally, the navigation buttons **166**, **168** may be used to navigate the user interface. Referring again to FIG. **12**, scrolling the scroll wheel may sequentially highlight different ones of the modes of content **172**. In one example, the highlighting may be achieved by changing the color of the selected mode, and/or by providing a visual indicator, such as a colored bar **176**. A highlighted mode **172** may be selected by pressing the scroll wheel, thereby bringing up a new "page" or screen on the user interface corresponding to the selected mode. Once within a selected mode of content **172**, the scroll wheel may similarly be used to select particular functions, features or applications within that mode. In one embodiment, the default action for the scroll wheel **132** may vary depending on whether the portable computer **100** is in the laptop mode or the easel mode. For example, in easel mode, the default action for the scroll wheel may be channel selection within the channels mode **172**(*e*).

As discussed above, in one embodiment volume control for the speakers **128** may be provided by the volume control button **204** and mute button **206**. Alternatively, according to another embodiment, volume control may be provided using the scroll wheel **132**. Thus, as a user scrolls the scroll wheel **132**, as illustrated in FIG. **14** by arrow **161**, a volume indicator may appear on the display screen **110**. In one example, the volume indicator may comprise a transparent, or partially transparent, box **162** containing volume level indicators that may appear directly below the scroll wheel **132** on the display screen **110**. In this example, as the user scrolls the scroll wheel **132**, different volume levels in the volume box **162** may be successively highlighted, to indicate to the user that the volume is increasing or decreasing.

In one embodiment, the scroll wheel **132** may be depressible as well as scrollable. Thus, pressing the scroll wheel **132**, as illustrated in FIG. **15**, may allow further control, such as, for example, selecting a channel onto which the user has scrolled, or "play" and "pause" of audio or video being played through the portable computer **100**.

As discussed above, according to one embodiment, one or more navigation buttons may be used in conjunction with the scroll wheel. In particular, in one embodiment, the navigation button(s) may be used to change the action of the scroll wheel. As discussed above, in one example, the default action of the scroll wheel is volume control. This action may be changed by pressing the navigation button **166**, as illustrated in FIG. **16**, for example, from volume control to menu navigation in the user interface, and vice versa. According to one embodiment, the effect of pressing the navigation button **166** may vary depending on active the mode of content of the portable computer **100**. For example, if a user is in the media mode using a photo viewing application, pressing the navigation button **166** may change the action of the scroll wheel **132** from mode navigation to slideshow controls for the photos. When the navigation button **166** is pressed, an control indicator box (similar to the volume indicator box **162** discussed above with reference to FIG. **14**) may appear containing different actions for the photo slideshow, such as "play," "next," "back," "skip," "full screen view," etc., and scrolling the scroll wheel **132** may allow a user to select one of these actions. Pressing the navigation button **166** again may return the scroll wheel action to menu navigation, to allow the user to, for example, move to a different feature or application within the active mode, or to select a different mode.

As can be seen in FIG. **16**, the navigation button **166** may be easily accessed when the portable computer **100** is in the easel mode, providing a convenient navigation tool for this configuration. A similar navigation button **168** may be provided on the keyboard **106**, as illustrated in FIG. **17**. In one example, the functionality of the two navigation buttons **166**, **168** may be the same, with the different locations providing easy, comfortable access in the different configuration modes (i.e., laptop or easel) of the portable computer **100**. Thus, a user may use either navigation button **166** or navigation button **168**, depending on personal preference. In another example, the two navigation buttons may have different functionality. For example, the navigation button **166** may be used to alter the action of the scroll wheel **132**, as discussed above, while the navigation button **168** is used to navigate "up" or "down" a level within the map user interface. For example, pressing the navigation button **168** while within a given mode of content may allow the user to "back up" to the home screen; or pressing the navigation button **168** while within a selected channel (in the channel mode of the content **172***e*) may allow the user to "back-up" to the channel mode main page.

It is to be appreciated that numerous variations on the functionality of the navigation buttons **166**, **168** is possible, as would be recognized by those skilled in the art, and the above examples are given for illustration only and are not intended to be limiting. In addition, any functions described with reference to one navigation button (**166** or **168**) may be instead (or additionally) implemented with the other navigation button. In one example, the function of the navigation buttons **166**, **168** may vary depending on whether the portable computer **100** is configured into the laptop mode or the easel mode. For example, only the navigation button **166** may be active in the easel mode, and only the navigation button **168** may be active in the laptop mode. Alternatively, both navigation buttons **166**, **168** may be usable in either the laptop mode or the easel mode, but their functionality may vary. For example, when the portable computer **100** is in the easel mode, the default action for the navigation button **166** may be channel selection whereas the default action for the navigation button **168** is to access the "home" screen. Furthermore, the portable computer **100** is not limited to the use of two navigation buttons and may instead comprise only a single navigation button or more than two navigation buttons, any of which may be disposed in the locations described above (e.g., on the rounded portion **120** of the base **104** or on the keyboard **106**), or in other locations on the portable computer.

As discussed above, according to one embodiment, the function or display content and/or display orientation of the portable computer may vary when the portable computer is configured from the laptop mode into the easel mode, or vice versa. For example, as discussed above, when the portable computer **100** is configured into the easel mode, the visual display on the display screen **110** is automatically rotated 180 degrees such that the information appears "right-way-up," even through the display screen is upside-down compared to when the portable computer is in the laptop mode. In another example, for at least some activities within at least some modes of content (e.g., viewing a photograph or video), when the portable computer **100** is configured into the easel mode, the display may automatically adjust to "full screen view" (i.e., the displayed image or video is displayed on the full screen size, rather than in a window) to allow for comfortable viewing.

In addition, as discussed above, the ability to configure the portable computer **100** into either the laptop mode or the easel mode provides enhanced functionality. For example, when the portable computer **100** is not being actively used, the user may configure the portable computer into the easel mode, and program the portable computer to act as a digital photo frame, displaying one or more photos of the user's choice. In the easel mode, the portable computer **100** may occupy a smaller footprint on a surface than in the laptop or closed modes because the base **104** and display component **102** are upright, as illustrated in FIGS. **4** and **5**. In addition, because the portable computer can act as a passive information and/or entertainment device, such as a photo frame or clock, as discussed above, the portable computer may provide a useful function even when not being actively used by the user, and may do so (in the easel mode) without taking up much surface area.

According to another embodiment, the portable computer **100** may further comprise a wireless signal indicator **178**, as illustrated in FIG. **18**. The wireless signal indicator **178** may indicate the availability and/or strength of a wireless signal to which the portable computer **100** is connected, or is attempting to connect to. In one example, the color of the wireless signal indicator **178** may provide information regarding the strength of a detected wireless signal. For example, green may indicate a "good" signal; yellow may indicate a "poor" or "low" signal; and red may indicate that there is no signal available. In one example, the wireless signal indicator **178** may be ON or active whenever the portable computer **100** is powered up. Alternatively, the wireless signal indicator **178** may be activated by a user action, for example, by pressing the navigation button **166** or another button or key provided on the portable computer **100**, and may remain active for a predetermined time period (e.g., for 2 seconds, 10 seconds, one minute, etc.). As discussed above, the functionality of the navigation button **166** may vary depending on the configuration mode of the portable computer **100**. In one example, when the portable computer **100** is in the closed position, but still powered up, the default action for the navigation button **166** may be to activate the wireless signal indicator **178**.

According to one embodiment, the portable computer **100** may be provided with power cord and adapter to allow the portable computer to be plugged into a wall supply. Referring to FIG. **19**, there is illustrated a view of a portion of the portable computer **100**, showing a power jack **180** to which the power adaptor can be connected. As discussed above, the portable computer **100** may also include a port **164** to which peripheral devices, such as mouse, external keyboard, portable flash drive, memory stick, etc. may be connected. In one example, the port **164** is a USB port; however, it is to be appreciated that the port may accommodate protocols other than USB. In addition, although only one port **164** is illustrated in FIG. **19**, the portable computer **100** may comprise multiple ports that may accommodate multiple protocols. In one example, the portable computer **100** may also comprise a headphone jack **182**. It is to be appreciated that the location of any or all of the power jack **180**, port(s) **164**, and headphone jack **182** are not limited to the example shown in FIG. **19**, but may be anywhere convenient or desirable on the portable computer **100**.

Referring to FIG. **20**, there is illustrated a top down view one example of a power adaptor **184** that may be used with the portable computer **100** and connected via the power jack **180**. As known to those skilled in the art, the power adaptor **184** comprises a transformer (not shown) that converts the wall power to a level acceptable for use by the portable computer **100**. In one embodiment, the power adaptor **184** comprises a substantially round body **186** that houses the transformer and other necessary components. A connector **188** may allow the power adaptor **184** to be connected to a wall outlet or extension cord. In one example, the connector **188** may include foldable prongs **190** that can be folded against the connector **188** for storage, and folded out for connection, as illustrated in FIG. **21**. A cord **192** may be slidably accommodated within the body **186**, such that the cord may be stored within the body and flexibly extended (up to its maximum length) by a user.

According to one embodiment, the cord **192** may be wound around a cord spool **194** located within, or partially within, the body **186** of the power adaptor **184**. As illustrated in FIG. **21**, the cord spool **194** may be configured to slide out from the body **186** of the power adaptor **184**, such that the cord **192** can be wound around the cord spool **194**, as illustrated in FIGS. **22**A and **22**B.

According to another embodiment, the portable computer **100** may be configured to connect to a docking station **196**, as illustrated in FIG. **23**. In one embodiment, a connector **198** on the docking station **196** may be configured to slidably connect to connectors **200** on the portable computer **100**, as illustrated in FIG. **23**. In one example, the connectors **200** may include power and audio connectors, such that the portable computer **100** may receive power from the docking station and receive and/or provide audio signals from/to the docking station, respectively. For example, the docking station may be coupled to external speakers, and the portable computer may provide audio signals to the docking station to be played through the external speakers. In another example, the docking station **196** may also be coupled to an audio device (not shown), such as an MP3 player, which may provide audio signals and data to the portable computer **100**, for example, to update an audio library on the portable computer. It is to be appreciated that many other variations of communication between the portable computer **100** and devices coupled to the docking station **196** are possible, as would be recognized by those skilled in the art, and such variations are intended to be within the scope of this disclosure. Furthermore, numerous variations on the connector(s) **198**, **200** that couple the docking station **196** to the portable computer **100** are also possible, as would be recognized by those skilled in the art. For example, the portable computer **100** may include a multi-pin connector **202** located on the base **104**, as illustrated in FIG. **24**. Such and other variations are intended to be within the scope of this disclosure and the above-mentioned examples are provided for illustration only and are not intended to be limiting.

In addition, it is to be appreciated that although the above discussion refers primarily to the portable computer **100** being in either the laptop mode or easel mode, other modes or configurations are also possible. For example, as discussed above, because the portable computer **100** can be configured from the closed position, through the laptop mode into the easel mode by rotating the display component **102**, a number of configurations are possible in between "true" laptop mode and "true" easel mode. In another example, the portable computer **100** may be configured into a "frame" mode, as illustrated in FIG. **26**, in which the portable computer is placed on a surface **212** with the keyboard **106** "face down" on the surface **212** and the display **110** facing upward. In the frame mode, the display component **102** may be at a similar orientation, and angle **134**, with respect to the base component **104** as in the easel mode. However, rather than the base component **104** and display component **102** being oriented vertically with

respect to the surface **212**, as in the easel mode (in which the portable computer forms an inverted "V" as discussed above), in the frame mode, the base component **104** may lie flat on the surface **212**, as shown in FIG. **26**. In one example, software and/or hardware protection may be provided for the keyboard to prevent keys from being pressed (or to prevent the portable computer from responding to pressed keys) when the portable computer is in the frame mode.

Similarly, referring to FIG. **27**, there is illustrated another configuration of the portable computer **100**, referring to as the "flat" mode. In the flat mode, the display component **102** may be rotated (or opened) to approximately 180 degrees with respect to the base component **104**, such that the base component and display component lay flat on a surface, with the keyboard **106** and display screen **110** exposed, as shown in FIG. **27**. Unlike the easel and frame modes, in which the keyboard may be concealed and not easily accessible, in the flat mode, the keyboard is accessible and usable. In addition, as discussed above, the visual display on the display screen **110** may be automatically rotated to accommodate comfortable viewing of information by persons located in different positions relative to the base component **104** or display component **102**. The visual display on the display screen **110** may also be manually adjusted by a user using, for example, the keyboard **106**, touch pad **108** or mouse (not shown), scroll wheel **132** or navigation buttons (not shown). For example, if a user (located at position A) wishes to display information for a person located opposite the user (at position B), the visual display may be rotated (automatically or manually) 180 degrees such that the information appears "right-way-up," to the person at location B, even through the display screen **110** is upside-down for that person. Similarly, in another example, the visual display may be rotated (automatically or manually) 90 degrees such that the information appears "right-way-up," for a person at location C. In one example, a user can "toggle" the visual display among various orientations. For example, a user at location A may have the visual display facing themselves while using the keyboard **106** or other controls to change or access information on the display, then toggle the display orientation 180 or 90 degrees to display the information for persons at locations B or C.

In summary, various aspects and embodiments provide a portable computer that is configurable between different operating modes, including a laptop mode and an easel mode, and that is capable of different display formats and functionality in the different modes. The ability to view and operate the portable computer in the different laptop and easel modes, and to incorporate features and functions such as an alarm clock, digital photograph frame, voice-over-IP, etc, may provide enhanced flexibility and usefulness. In addition, the portable computer may include a graphical user interface that may work seamlessly with the computer hardware to provide an enjoyable, holistic user experience.

Having thus described several aspects of at least one embodiment, it is to be appreciated various alterations, modifications, and improvements will readily occur to those skilled in the art. For example functionality or features that have been described herein in connection with hardware may instead be implemented in software, or vice versa. For example, the wireless signal indicator discussed above may instead (or in addition) be provided as a software application. Such alterations, modifications, and improvements are intended to be part of this disclosure and are intended to be within the scope of the invention. Accordingly, the foregoing description and drawings are by way of example only.

What is claimed is:

1. A portable computer configurable between a plurality of display modes comprising a first mode and a second mode, the portable computer comprising:

a display component comprising a display screen; a base comprising a keyboard and a touchpad;

hinge assembly that rotatably couples the base to the display component, the hinge assembly being configured to permit the display component to rotate relative to the base up to at least 270 degrees from a closed position where the display screen faces the keyboard;

an orientation sensor configured to generate orientation information indicative of an orientation of at least part of the portable computer; and

a display manager configured to detect a current display mode from among the plurality of display modes based at least in part on the orientation information and enlarge at least some computer content displayed on the display screen when the current display mode transitions from the first mode to the second mode;

wherein the display component is in a first position relative to the base in the first mode; and wherein the display component is in a second position relative to the base that is different from the first position in the second mode.

2. The portable computer of claim **1**, wherein the display component in the first position is rotated relative to the base no more than 180 degrees from the closed position and wherein the display component in the second position is rotated relative to the base beyond 180 degrees from the closed position.

3. The portable computer of claim **2**, wherein the display manager is configured to display content in a first orientation when the current display mode is the first mode and display content in a second orientation that is rotated 180 degrees relative to the first orientation when the current display mode is the second mode.

4. The portable computer of claim **3**, wherein the first mode is a laptop mode and the second mode is an easel mode, wherein the plurality of display modes comprises a frame mode, and wherein the display manager is configured to display content in the first orientation when the current display mode is the frame mode.

5. The portable computer of claim **4**, wherein the orientation sensor comprises an accelerometer.

6. The portable computer of claim **1**, wherein the at least some computer content includes at least one member selected from the group consisting of: an icon, a menu, an image, and a video.

7. The portable computer of claim **1**, wherein the portable computer is configured to disable the keyboard when the current display mode is the second mode.

8. The portable computer of claim **1**, further comprising at least one navigation element that is accessible in the first and second modes.

9. The portable computer of claim **8**, wherein the display manager is configured to transition to a home screen when the navigation element is activated.

10. The portable computer of claim **9**, wherein the navigation element comprises a navigation button disposed on a side of the base.

11. A portable computer configurable between a plurality of display modes comprising a first mode, a second mode, and a third mode, the portable computer comprising:

a display component comprising a surface;

a display screen disposed in the surface of the display component; a camera disposed in the surface of the display component; a base comprising a first surface

and a second surface; a keyboard disposed in the first surface of the base; a touchpad disposed in the first surface of the base; a power button disposed in the second surface of the base; a central processing unit disposed in the base;

hinge assembly that rotatably couples the base to the display component, the hinge assembly being configured to permit the display component to rotate relative to the base up to at least 270 degrees from a closed position where the surface of the display component faces the first surface of the base;

an orientation sensor configured to generate orientation information indicative of an orientation of at least part of the portable computer; and

a display manager configured to detect a current display mode from among the plurality of display modes based at least in part on the orientation information, display content in a first orientation when the current display mode is the first mode or the third mode, display content in a second orientation that is rotated 180 degrees relative to the first orientation when the current display mode is the second mode, and enlarge at least some computer content displayed on the display screen when the current display mode transitions from the first mode to the second mode.

12. The portable computer of claim **11**, wherein the first mode is a laptop mode, the second mode is easel mode, and the third mode is frame mode.

13. The portable computer of claim **12**, wherein the orientation sensor comprises an accelerometer.

14. The portable computer of claim **13**, wherein the portable computer is configured to disable the keyboard when the current display mode is the third mode.

15. The portable computer of claim **11**, wherein the computer content includes at least one member selected from the group consisting of: an icon, a menu, an image, and a video.

16. The portable computer of claim **11**, further comprising at least one navigation element disposed in the second surface of the base.

17. The portable computer of claim **16**, wherein the display manager is configured to transition to a first home screen when the navigation element is activated and the current display mode is the first mode.

18. The portable computer of claim **17**, wherein the display manager is configured to transition to a second home screen when the navigation element is activated and the current display mode is the second mode, wherein the first home screen is different from the second home screen.

19. The portable computer of claim **16**, further comprising a speaker disposed in the base and a volume control button disposed in the second surface of the base.

20. A portable computer configurable between a plurality of display modes comprising a laptop mode, an easel mode, and a frame mode, the portable computer comprising:

a display component comprising a surface;

a display screen disposed in the surface of the display component; a camera disposed in the surface of the display component;

a base comprising a top surface, a bottom surface that is opposite the top surface, and a lateral surface that is between the top surface and the bottom surface; a keyboard disposed in the top surface of the base; a touchpad disposed in the top surface of the base; a power button disposed in the lateral surface of the base; a central processing unit disposed in the base; a speaker disposed in the base;

a volume control button disposed in the lateral surface of the base;

hinge assembly that rotatably couples the base to the display component and comprises a multi-axis hinge, the hinge assembly being configured to permit the display component to rotate relative to the base up to at least 270 degrees from a closed position where the surface of the display component faces the top surface of the base;

an accelerometer configured to generate orientation information indicative of an orientation of at least part of the portable computer; and

a display manager configured to detect a current display mode from among the plurality of display modes based at least in part on the orientation information, display content in a first orientation when the current display mode is the laptop mode or the frame mode, display content in a second orientation that is rotated 180 degrees relative to the first orientation when the current display mode is the easel mode, and enlarge at least some computer content displayed on the display screen when the current display mode transitions from the laptop mode to the easel mode; and

wherein the at least some computer content includes at least one member selected from the group consisting of: an image and a video.

* * * * *

EXHIBIT E

US009003315B2

(12) **United States Patent**
Behar et al.

(10) **Patent No.: US 9,003,315 B2**
(45) **Date of Patent: Apr. 7, 2015**

(54) **SYSTEM AND METHOD FOR STREAMLINING USER INTERACTION WITH ELECTRONIC CONTENT**

(75) Inventors: **Yves Behar**, Oakland, CA (US); **Joshua Morenstein**, San Francisco, CA (US); **Christopher Hibmacronan**, Oakland, CA (US); **Naoya Edahiro**, San Francisco, CA (US); **Matthew David Day**, San Francisco, CA (US); **Robert Sanford Havoc Pennington**, North Chelmsford, MA (US); **Noah Bruce Guyot**, Mill Valley, CA (US); **Daniel Kuo**, San Francisco, CA (US); **Jenea Boshart Hayes**, Castro Valley, CA (US); **Aaron Tang**, Somerville, MA (US); **Donald Francis Fischer**, Charlestown, MA (US); **Christian Marc Schmidt**, Brooklyn, NY (US); **Lisa Strausfeld**, New York, NY (US); **David Livingstone Fore**, Oakland, CA (US); **John Chuang**, Brookline, MA (US); **Chris Bambacus**, Framingham, MA (US); **Bart Haney**, Boston, MA (US); **Logan Ray**, Boston, MA (US); **Serge Beaulieu**, San Francisco, CA (US)

(73) Assignee: **Litl LLC**, Boston, MA (US)

(*) Notice: Subject to any disclaimer, the term of this patent is extended or adjusted under 35 U.S.C. 154(b) by 417 days.

(21) Appl. No.: **12/416,496**

(22) Filed: **Apr. 1, 2009**

(65) **Prior Publication Data**

US 2009/0303676 A1 Dec. 10, 2009

Related U.S. Application Data

(63) Continuation-in-part of application No. 12/170,951, filed on Jul. 10, 2008, now Pat. No. 8,624,844, and a continuation-in-part of application No. 12/170,939, filed on Jul. 10, 2008, now Pat. No. 8,289,688.

(60) Provisional application No. 61/041,365, filed on Apr. 1, 2008.

(51) **Int. Cl.**
G06F 3/0481 (2013.01)
G06F 1/16 (2006.01)
(Continued)

(52) **U.S. Cl.**
CPC ***G06F 1/169*** (2013.01); ***G06F 1/162*** (2013.01); ***G06F 1/1632*** (2013.01); ***G06F 1/1677*** (2013.01); ***G06F 3/0362*** (2013.01); ***G06F 17/30905*** (2013.01)

(58) **Field of Classification Search**
USPC 715/744, 764, 765, 788, 789, 800
See application file for complete search history.

(56) **References Cited**

U.S. PATENT DOCUMENTS

3,468,576 A 9/1969 Beyer et al.
4,939,514 A 7/1990 Miyazaki
(Continued)

FOREIGN PATENT DOCUMENTS

CN 1292112 A 4/2001
DE 19952486 5/2001
(Continued)

OTHER PUBLICATIONS

Miller, M., "Creating a Digital Home Entertainment System with Windows Media Center", Apr. 2006, Que.*
(Continued)

Primary Examiner — Amy Ng
Assistant Examiner — Claudia Dragoescu
(74) *Attorney, Agent, or Firm* — Lando & Anastasi, LLP

(57) **ABSTRACT**

Various aspects and embodiments are directed to a graphical user interface that organizes interface elements into views of

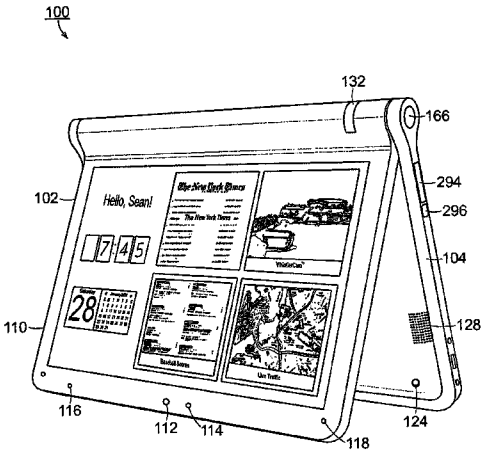

computer content for presentation to a user. Different views of are used to provide an interface that is responsive to configurations of the device and responsive to activity being performed by the user. Aspects include permitting the user to transition the device from one configuration to another during its use, for example from easel to laptop modes. Further the elements that comprise the graphical user interface are configured to present a summarized view of available actions and content, in order to simplify user interaction. The different views present different organizations of the interface elements and in some example display only certain ones of the modes of content in order to reduce the number of options a user must navigate to accomplish an objective. According to another aspect, methods and systems for streamlining user interaction with computer content are provided. In some embodiments, streamlining includes pre-configuring a user device based on received information. Other embodiments include presenting consistent visual representations used to navigated to views that present computer content.

57 Claims, 56 Drawing Sheets

(51) **Int. Cl.**
G06F 3/0362 (2013.01)
G06F 17/30 (2006.01)

(56) **References Cited**

U.S. PATENT DOCUMENTS

D333,636 S 3/1993 Issa
5,200,913 A 4/1993 Hawkins et al.
5,268,817 A 12/1993 Miyagawa et al.
5,436,954 A 7/1995 Nishiyama et al.
5,515,345 A 5/1996 Barreira
5,712,760 A 1/1998 Coulon
D391,927 S 3/1998 Faranda
D392,944 S 3/1998 Issa
D395,868 S 7/1998 Iino
5,790,371 A 8/1998 Latocha
5,793,355 A 8/1998 Youens
5,796,575 A 8/1998 Podwalny et al.
D399,526 S 10/1998 Brady
5,825,352 A 10/1998 Bisset et al.
5,841,631 A 11/1998 Shin et al.
5,847,698 A 12/1998 Reavey et al.
5,900,848 A 5/1999 Haneda
5,926,364 A 7/1999 Karidis
5,949,643 A 9/1999 Batio
D416,003 S 11/1999 Schiefer et al.
5,987,704 A 11/1999 Tang
6,005,767 A 12/1999 Ku et al.
6,067,224 A 5/2000 Nobuchi
6,097,389 A 8/2000 Morris et al.
6,144,358 A 11/2000 Narayanaswamy et al.
6,222,507 B1 4/2001 Gouko
6,223,393 B1 5/2001 Knopf
6,262,885 B1 7/2001 Emma et al.
6,266,236 B1 7/2001 Ku et al.
6,275,376 B1 8/2001 Moon
6,295,038 B1 * 9/2001 Rebeske 345/1.1
6,302,612 B1 10/2001 Fowler
6,323,846 B1 11/2001 Westerman et al.
D452,238 S 12/2001 Sugano
6,327,482 B1 12/2001 Miyashita
6,341,061 B1 1/2002 Eisbach et al.
6,343,006 B1 1/2002 Moscovitch et al.
6,377,444 B1 4/2002 Price et al.
D462,069 S 8/2002 Gatto
6,437,974 B1 8/2002 Liu
D463,797 S 10/2002 Andre
6,464,195 B1 10/2002 Hildebrandt
6,492,974 B1 12/2002 Nobuchi et al.
6,510,049 B2 1/2003 Rosen
D476,326 S 6/2003 Tanimura
D479,708 S 9/2003 Hwang
6,628,267 B2 9/2003 Karidis et al.
6,642,909 B1 11/2003 Oliva
6,659,516 B2 12/2003 Wang et al.
6,661,426 B1 12/2003 Jetha et al.
6,665,175 B1 12/2003 deBoer
6,693,652 B1 * 2/2004 Barrus et al. 715/838
6,697,055 B1 2/2004 Bullister
D491,177 S 6/2004 Andre
D491,936 S 6/2004 Jao
D494,162 S 8/2004 Kondo
6,771,494 B2 8/2004 Shimano
D495,674 S 9/2004 Yoo
D495,694 S 9/2004 Chase
6,788,527 B2 9/2004 Doczy et al.
6,819,304 B2 11/2004 Branson
6,829,140 B2 12/2004 Shimano et al.
6,859,219 B1 2/2005 Sall
D504,128 S 4/2005 Maskatia
6,882,335 B2 4/2005 Saarinen
6,944,012 B2 9/2005 Doczy et al.
6,963,485 B2 11/2005 Hong
D512,997 S 12/2005 Lee
6,972,752 B2 12/2005 Nako et al.
D513,509 S 1/2006 Kawa
D516,552 S 3/2006 Iseki
D517,541 S 3/2006 Maskatia
D518,042 S 3/2006 Kanayama
7,035,665 B2 4/2006 Kido et al.
D523,429 S 6/2006 Lin
7,061,472 B1 6/2006 Schweizer et al.
7,072,179 B1 7/2006 Curran et al.
D528,541 S 9/2006 Maskatia
D528,993 S 9/2006 Wilson
7,138,962 B2 11/2006 Koenig
D534,531 S 1/2007 Ogasawara
D535,292 S 1/2007 Shi
D544,846 S 6/2007 Kindle
7,239,508 B2 7/2007 Ferrucei
7,250,207 B1 7/2007 Heal et al.
7,366,994 B2 4/2008 Loui
7,428,142 B1 9/2008 Ligtenberg
D581,371 S 11/2008 Richmond
7,467,356 B2 12/2008 Gettman et al.
7,522,946 B2 4/2009 Im
D593,085 S 5/2009 Behar
D593,086 S 5/2009 Behar
D593,091 S 5/2009 Behar
D605,635 S 12/2009 Edahiro
7,698,407 B2 * 4/2010 Mattox et al. 709/223
7,756,928 B1 7/2010 Meenan et al.
7,814,425 B1 10/2010 O'Shaugnessy et al.
7,869,834 B2 1/2011 Seol et al.
2001/0032320 A1 10/2001 Abdelnur et al.
2002/0005818 A1 1/2002 Bruzzone
2002/0010707 A1 1/2002 Chang et al.
2002/0021258 A1 2/2002 Koenig
2003/0048595 A1 3/2003 Hsieh
2003/0107603 A1 6/2003 Clapper
2003/0109232 A1 6/2003 Park
2004/0001049 A1 * 1/2004 Oakley 345/173
2004/0203535 A1 10/2004 Kim
2004/0207568 A1 10/2004 Ooshima et al.
2004/0212602 A1 10/2004 Nako et al.
2004/0228076 A1 11/2004 Clapper
2005/0005241 A1 1/2005 Hunleth et al.
2005/0010860 A1 1/2005 Weiss et al.
2005/0018396 A1 1/2005 Nakajima
2005/0041378 A1 2/2005 Hamada
2005/0063145 A1 3/2005 Homer
2005/0071782 A1 3/2005 Barrett et al.
2005/0083642 A1 4/2005 Senpuku et al.
2005/0091596 A1 4/2005 Anthony et al.
2005/0128695 A1 6/2005 Han
2005/0134717 A1 6/2005 Misawa
2005/0146845 A1 7/2005 Moscovitch
2005/0210399 A1 * 9/2005 Filner et al. 715/767
2005/0221865 A1 * 10/2005 Nishiyama et al. 455/566
2005/0257400 A1 11/2005 Sommerer
2005/0282596 A1 12/2005 Park
2006/0015823 A1 1/2006 Chao et al.
2006/0123353 A1 6/2006 Matthews et al.
2006/0126284 A1 6/2006 Moscovitch
2006/0238439 A1 10/2006 Fuller et al.
2006/0264243 A1 * 11/2006 Aarras 455/566
2006/0268500 A1 11/2006 Kuhn
2006/0277167 A1 12/2006 Gross et al.
2007/0073833 A1 3/2007 Roy et al.
2007/0138806 A1 6/2007 Ligtenberg et al.
2007/0182663 A1 8/2007 Biech
2007/0240076 A1 * 10/2007 Astala et al. 715/800
2007/0242421 A1 10/2007 Goschin et al.
2007/0247446 A1 10/2007 Orsley et al.
2008/0024388 A1 1/2008 Bruce
2008/0024465 A1 * 1/2008 Hawkins et al. 345/184
2008/0042987 A1 2/2008 Westerman et al.
2008/0059888 A1 * 3/2008 Dunko 715/744
2008/0062625 A1 3/2008 Batio
2008/0134093 A1 6/2008 Dharmarajan et al.
2008/0158795 A1 7/2008 Aoki et al.
2008/0174570 A1 * 7/2008 Jobs et al. 345/173
2008/0209493 A1 8/2008 Choi et al.
2008/0235594 A1 9/2008 Bhumkar et al.
2008/0284738 A1 11/2008 Hovden

(56) **References Cited**

U.S. PATENT DOCUMENTS

2009/0019383	A1	1/2009	Riley et al.	
2009/0019479	A1	1/2009	Kwak et al.	
2009/0150826	A1 *	6/2009	Lyndersay et al.	715/810
2009/0190295	A1	7/2009	Chin et al.	
2009/0193364	A1	7/2009	Jarrett et al.	
2009/0244012	A1	10/2009	Behar	
2009/0244832	A1	10/2009	Behar	
2009/0275366	A1	11/2009	Schilling	
2009/0300511	A1	12/2009	Behar	
2009/0322790	A1	12/2009	Behar	
2010/0174993	A1	7/2010	Pennington	

FOREIGN PATENT DOCUMENTS

EP	0588210		3/1993
EP	0588210	A1	3/1994
JP	5-197507	A	8/1993
JP	6090200	A	3/1994
JP	6-242853	A	9/1994
JP	6-259166	A	9/1994
JP	8-179851	A	7/1996
JP	10-111658	A	4/1998
JP	11-296259		10/1999
JP	2001-167211	A	6/2001
JP	2004-302179	A	10/2004
JP	2005-159741	A	6/2005
JP	2005-242436	A	9/2005
JP	2006-227409		8/2006
KR	10-2000-0036647	A	7/2000
KR	1020000036647		6/2002

OTHER PUBLICATIONS

http://laptop.org/en/laptop/start/ebook.shtml accessed on Sep. 29, 2008.

EP Search Report.

Search Report from International Application PCT/US2009/038599 dated Mar. 6, 2009.

* cited by examiner

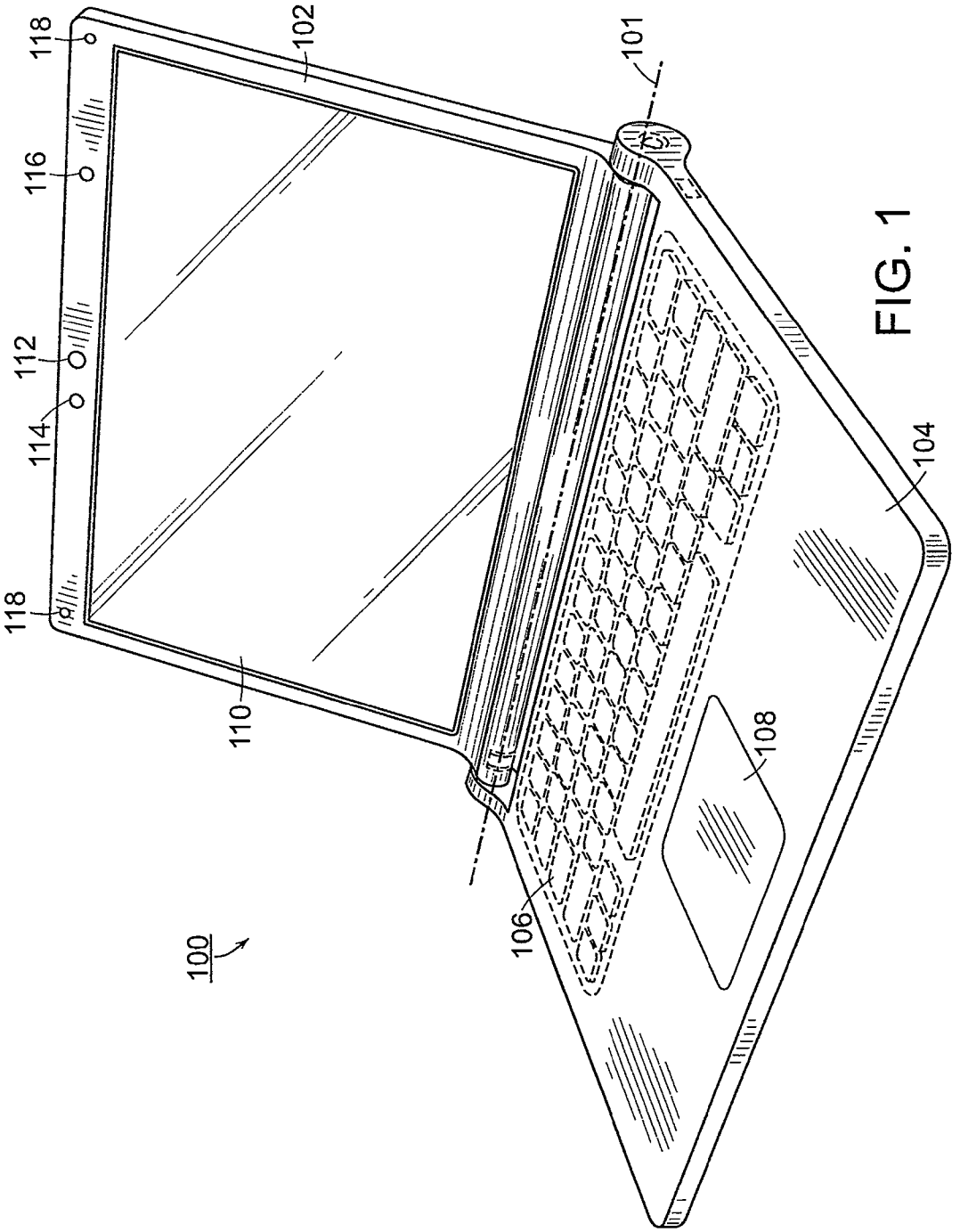

FIG. 1

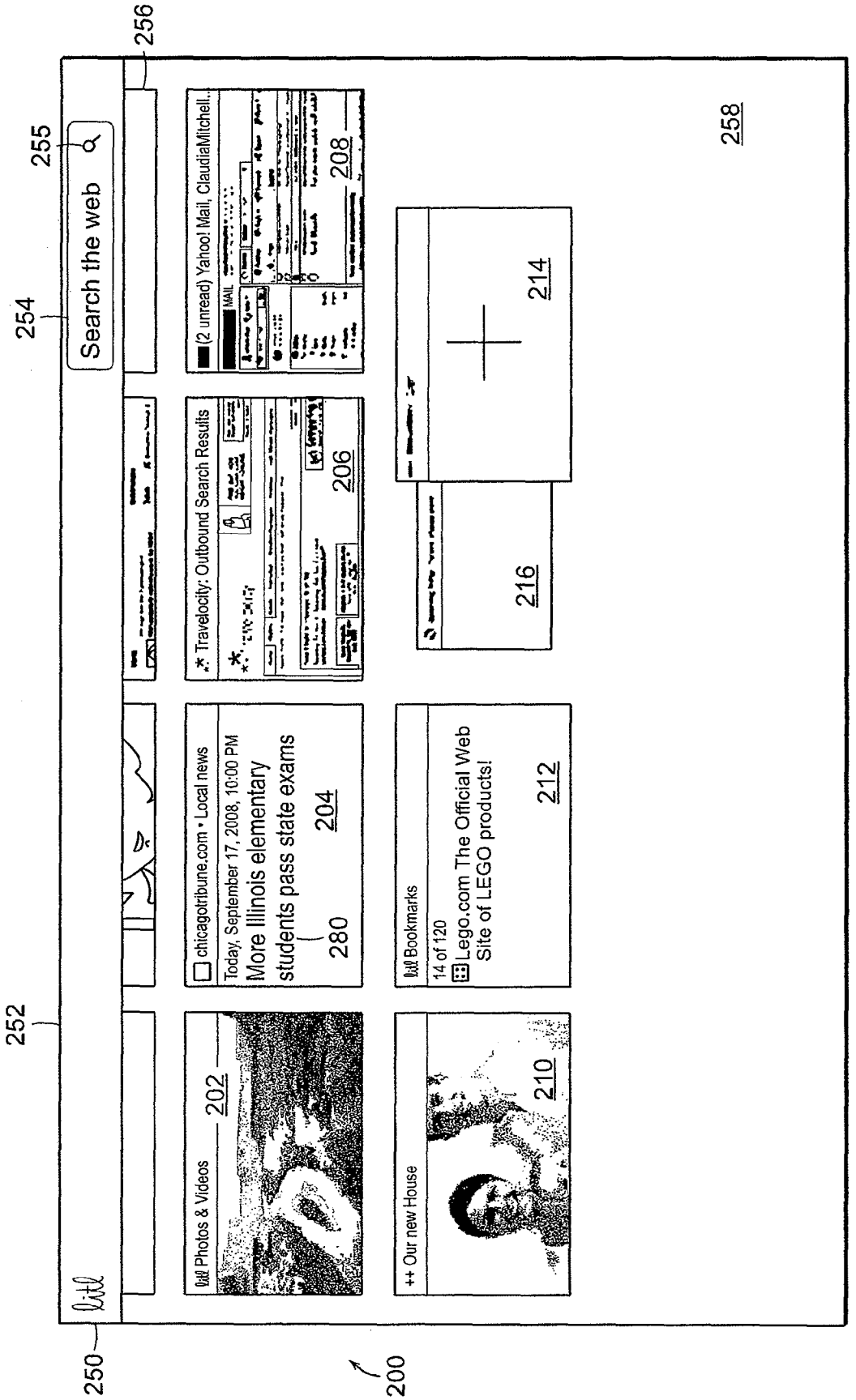
250
252
254
Search the web
255
256
Photos & Videos
202
chicagotribune.com • Local news
Today, September 17, 2008, 10:00 PM
More Illinois elementary students pass state exams
280
204
Travelocity: Outbound Search Results
206
(2 unread) Yahoo! Mail, ClaudiaMitchell...
MAIL
208
++ Our new House
210
Bookmarks
14 of 120
Lego.com The Official Web Site of LEGO products!
212
214
216
200
258

FIG. 2

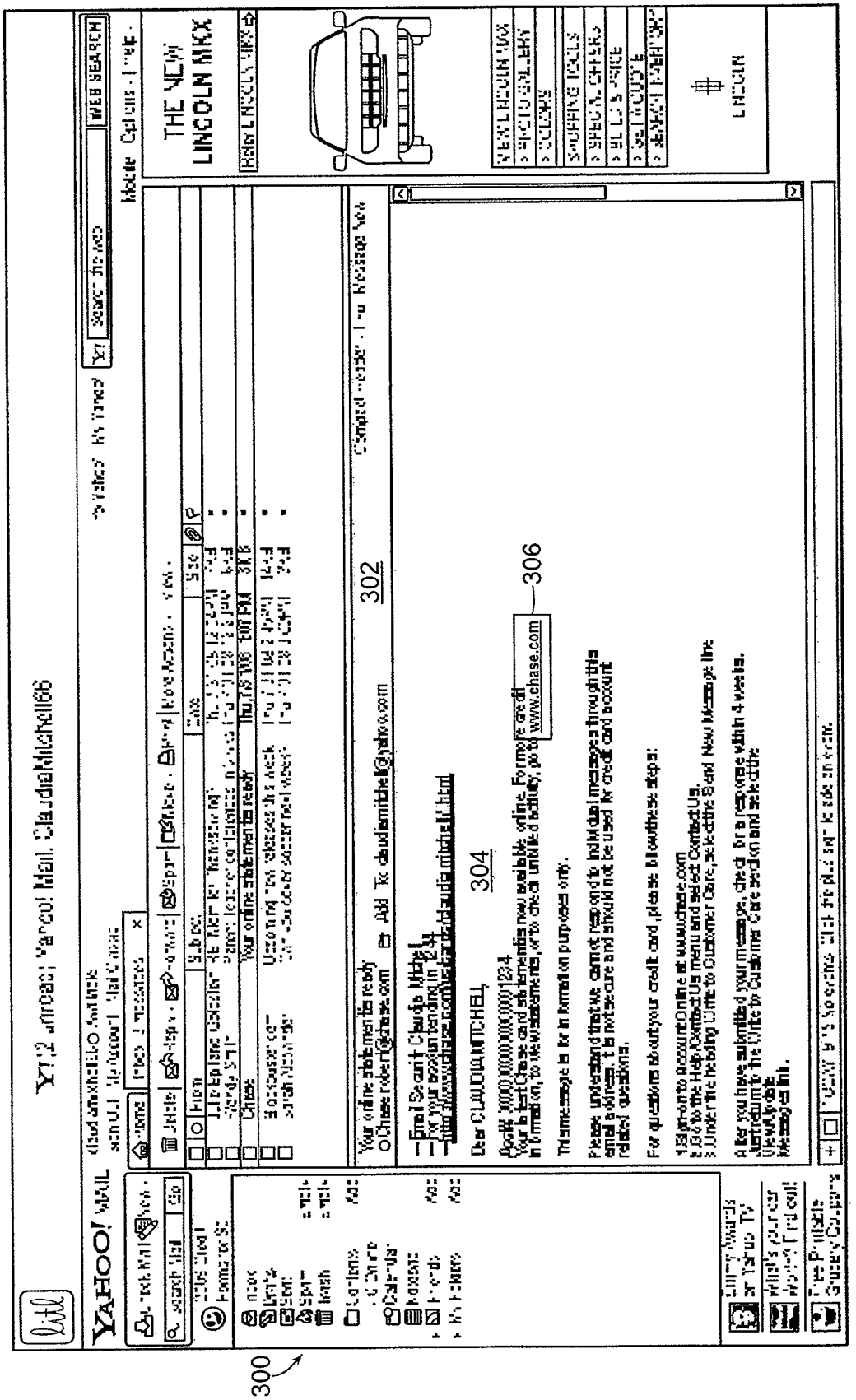

FIG. 3A

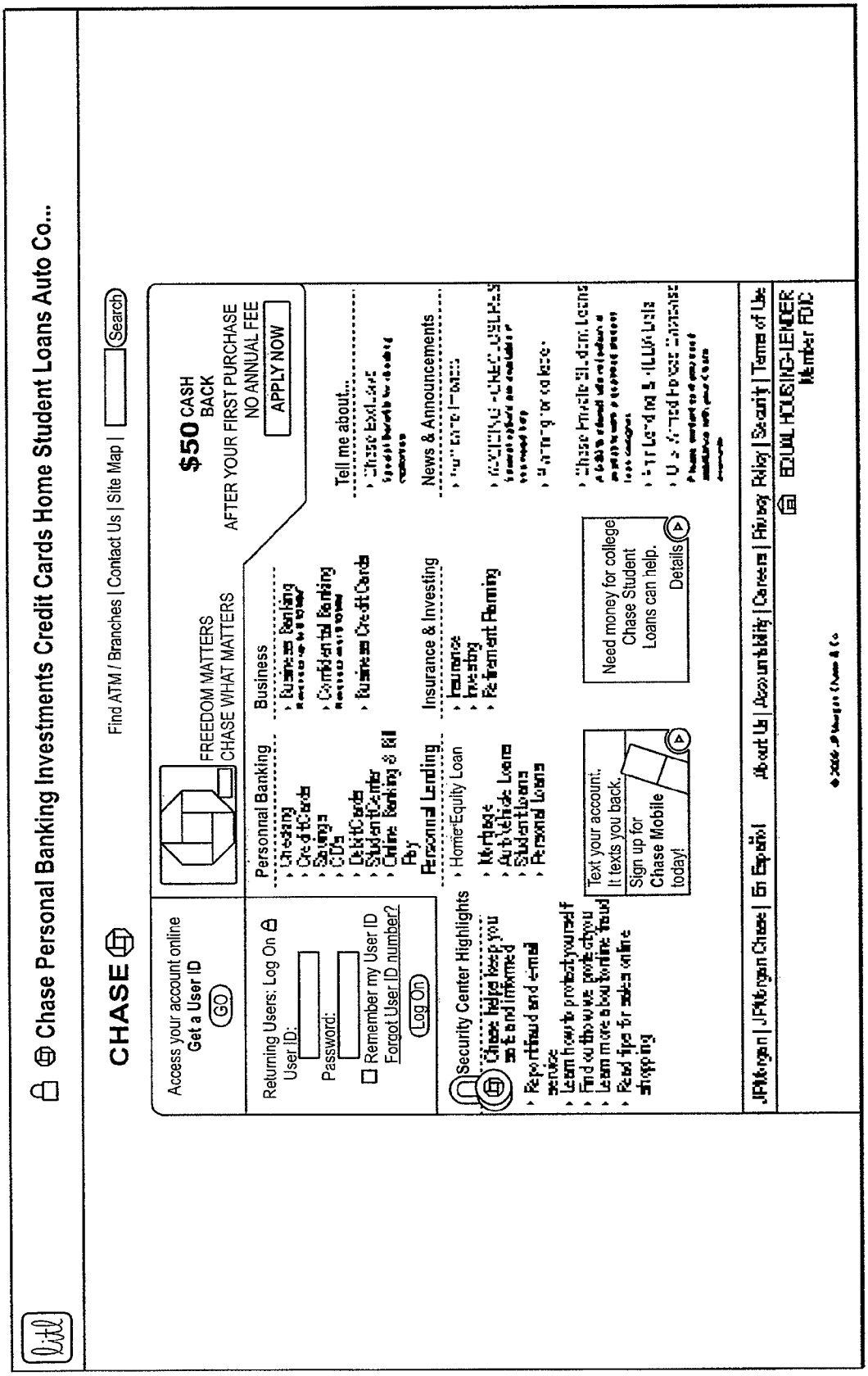
Chase Personal Banking Investments Credit Cards Home Student Loans Auto Co...
CHASE
Find ATM / Branches | Contact Us | Site Map |
Search
Access your account online
Get a User ID
GO
Returning Users: Log On
User ID:
Password:
Remember my User ID
Forgot User ID number?
Log On
FREEDOM MATTERS
CHASE WHAT MATTERS
$50 CASH BACK
AFTER YOUR FIRST PURCHASE
NO ANNUAL FEE
APPLY NOW
Personal Banking
Checking
Credit Cards
Savings
CDs
Debit Cards
Student Center
Online Banking & Bill Pay
Business
Business Banking
Confidential Banking
Business Credit Cards
Personal Lending
Home Equity Loan
Mortgage
Auto Vehicle Loans
Student Loans
Personal Loans
Insurance & Investing
Insurance
Investing
Retirement Planning
Tell me about...
News & Announcements
Security Center Highlights
Report fraud and email service
Text your account. It texts you back.
Sign up for Chase Mobile today!
Need money for college? Chase Student Loans can help.
Details
JPMorgan | JPMorgan Chase | En Español
About Us | Accountability | Careers | Privacy Policy | Security | Terms of Use
EQUAL HOUSING LENDER
Member FDIC

FIG. 3B

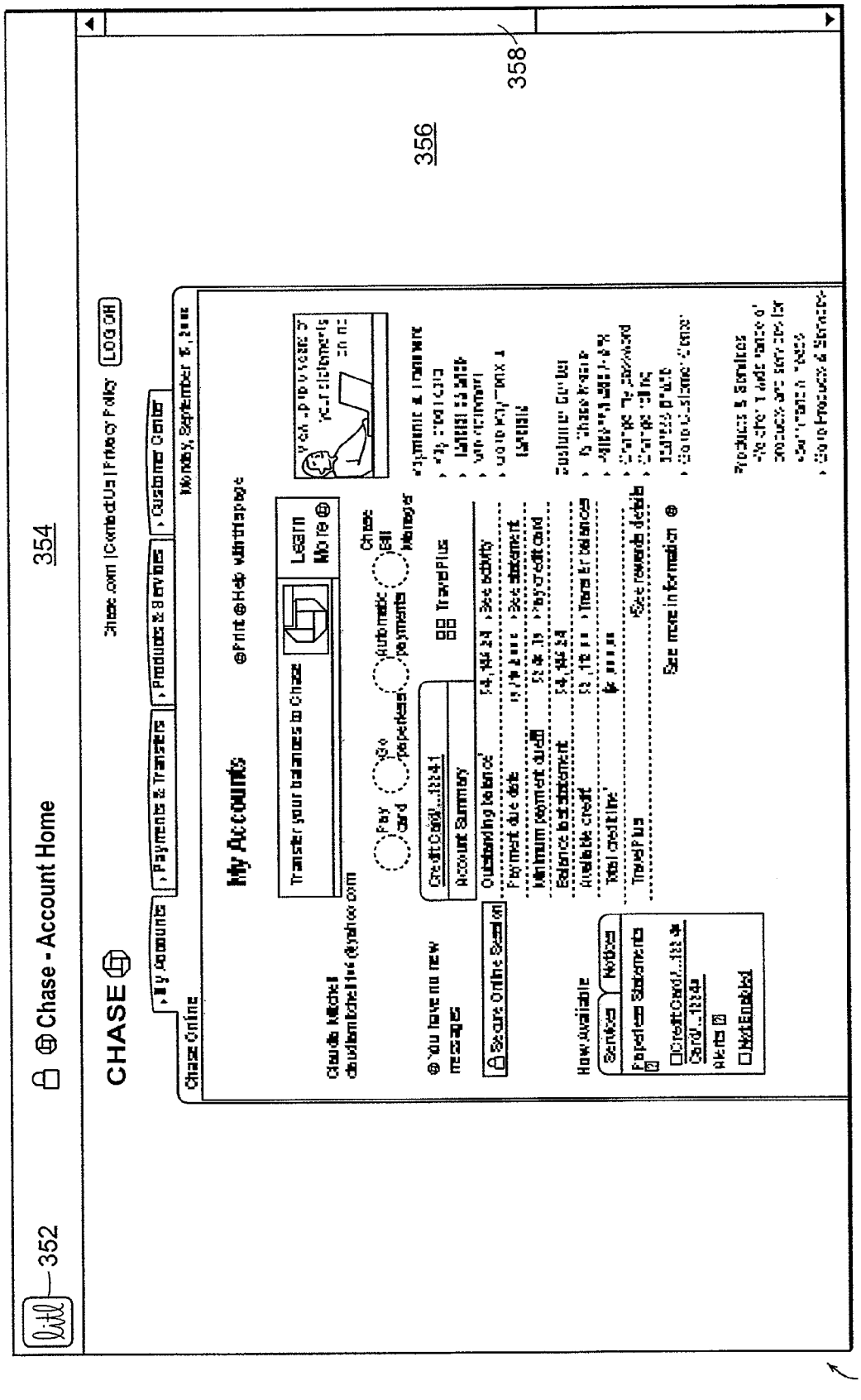
352
354
Chase - Account Home
CHASE
356
358
350
My Accounts
Transfer your balances to Chase
Learn More
Account Summary
Outstanding balance
Payment due date
Minimum payment due
Balance last statement
Available credit
Total credit line
Secure Online Session
Customer Center
LOG OFF

FIG. 3C

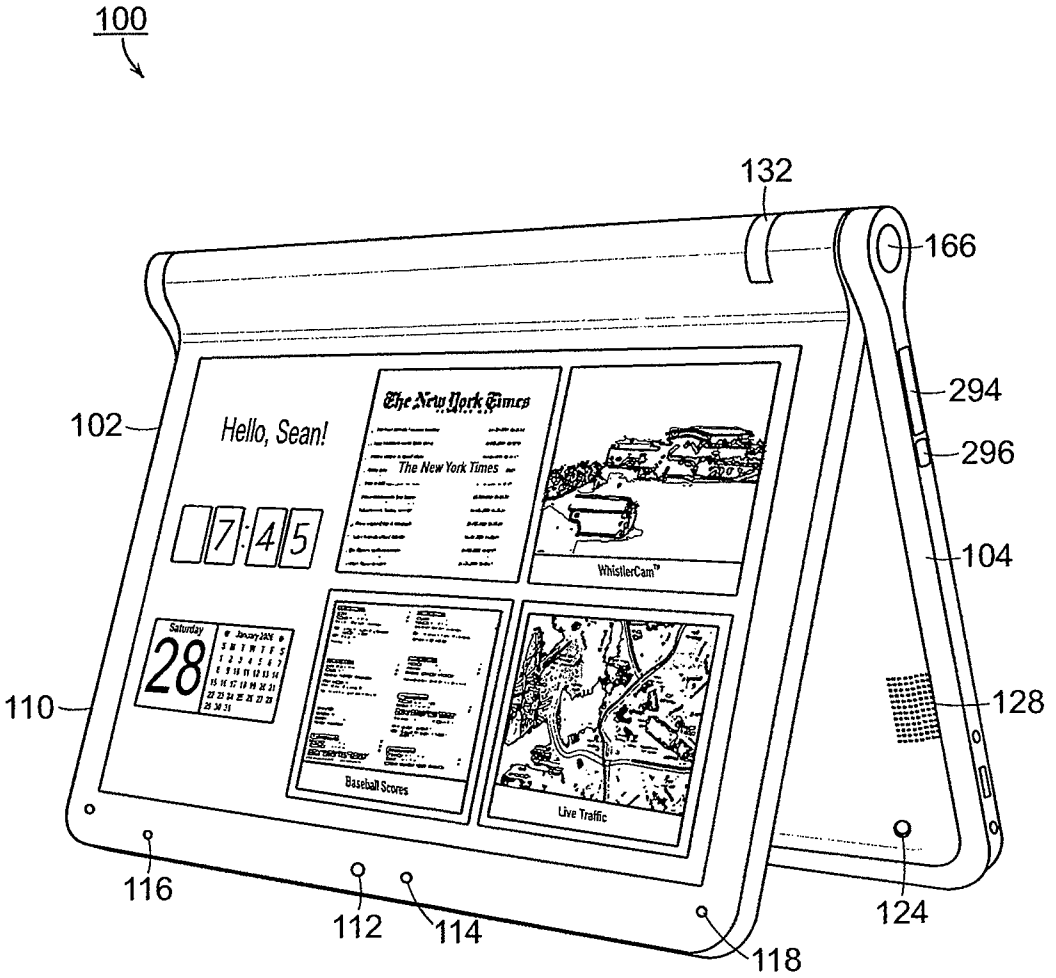
100
132
166
294
296
104
128
102
110
116
112
114
118
124
Hello, Sean!
7:45
The New York Times
WhistlerCam™
Saturday
28
Baseball Scores
Live Traffic

FIG. 4

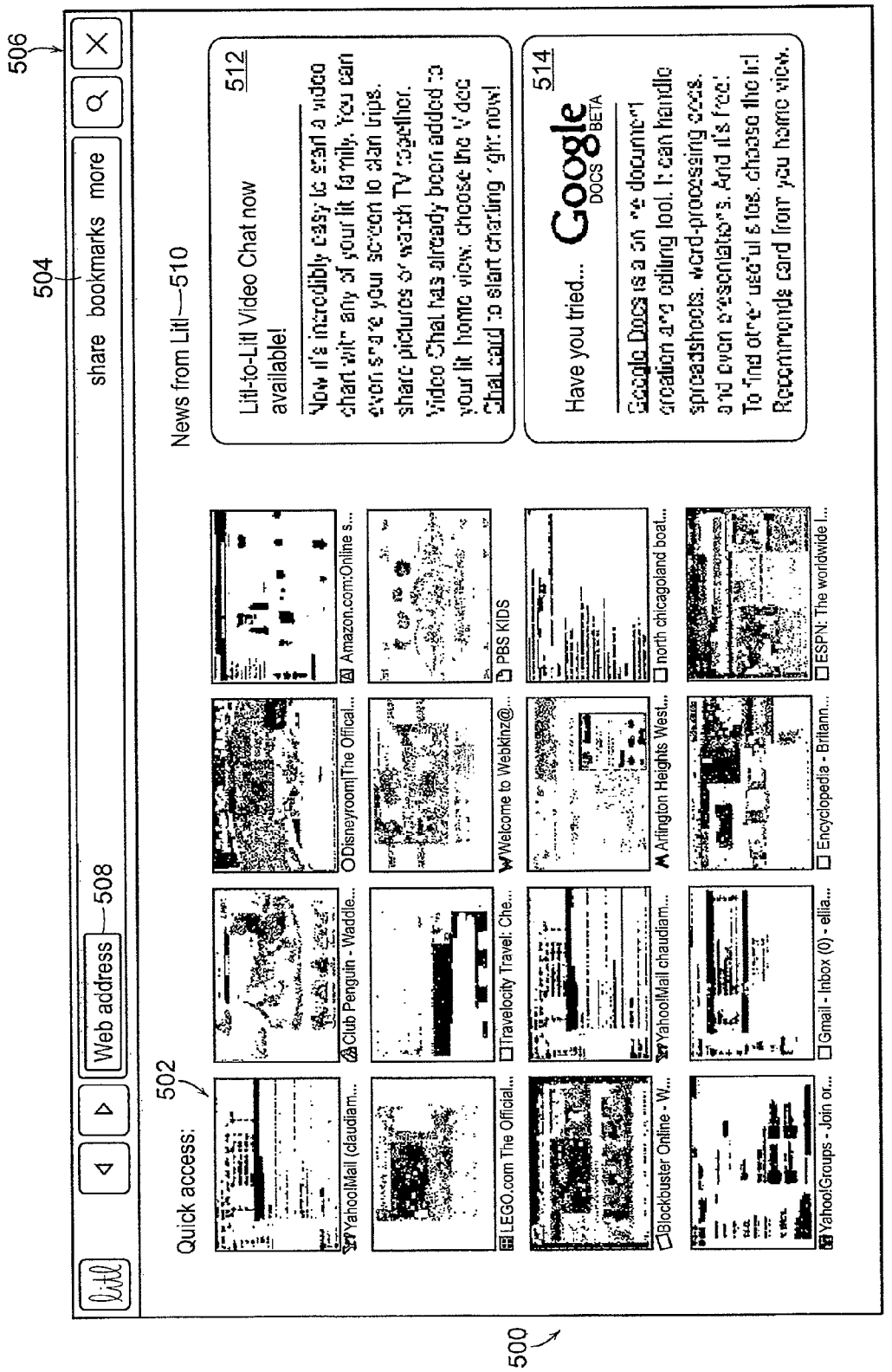
506
504
Web address
508
share
bookmarks
more
Quick access:
502
YahooMail (claudiam...
Club Penguin - Waddle...
Disneyroom|The Official...
Amazon.com:Online s...
LEGO.com The Official...
Travelocity Travel: Che...
Welcome to Webkinz@...
PBS KIDS
Blockbuster Online - W...
YahooMail claudiam...
Arlington Heights West...
north chicagoland boat...
YahooGroups - Join or...
Gmail - Inbox (0) - ellia...
Encyclopedia - Britann...
ESPN: The worldwide l...
News from Lili
510
Lili-to-Lili Video Chat now available!
512
Have you tried...
Google DOCS BETA
514
500

FIG. 5

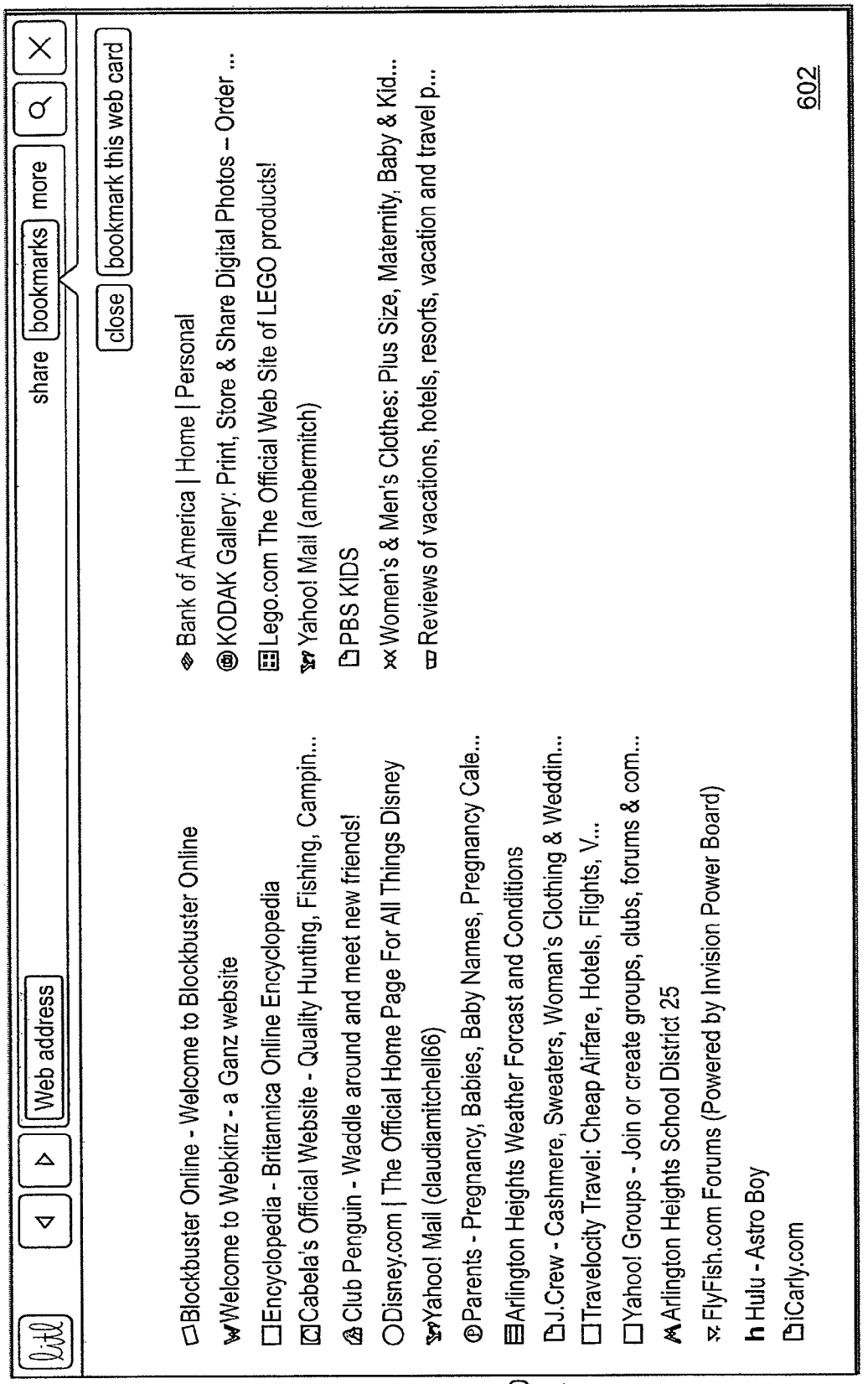
Web address
share
bookmarks
more
close
bookmark this web card
Blockbuster Online - Welcome to Blockbuster Online
Welcome to Webkinz - a Ganz website
Encyclopedia - Britannica Online Encyclopedia
Cabela's Official Website - Quality Hunting, Fishing, Campin...
Club Penguin - Waddle around and meet new friends!
Disney.com | The Official Home Page For All Things Disney
Yahoo! Mail (claudiamitchell66)
Parents - Pregnancy, Babies, Baby Names, Pregnancy Cale...
Arlington Heights Weather Forcast and Conditions
J.Crew - Cashmere, Sweaters, Woman's Clothing & Weddin...
Travelocity Travel: Cheap Airfare, Hotels, Flights, V...
Yahoo! Groups - Join or create groups, clubs, forums & com...
Arlington Heights School District 25
FlyFish.com Forums (Powered by Invision Power Board)
Hulu - Astro Boy
iCarly.com
Bank of America | Home | Personal
KODAK Gallery: Print, Store & Share Digital Photos – Order ...
Lego.com The Official Web Site of LEGO products!
Yahoo! Mail (ambermitch)
PBS KIDS
Women's & Men's Clothes: Plus Size, Maternity, Baby & Kid...
Reviews of vacations, hotels, resorts, vacation and travel p...
600
602

FIG. 6

700

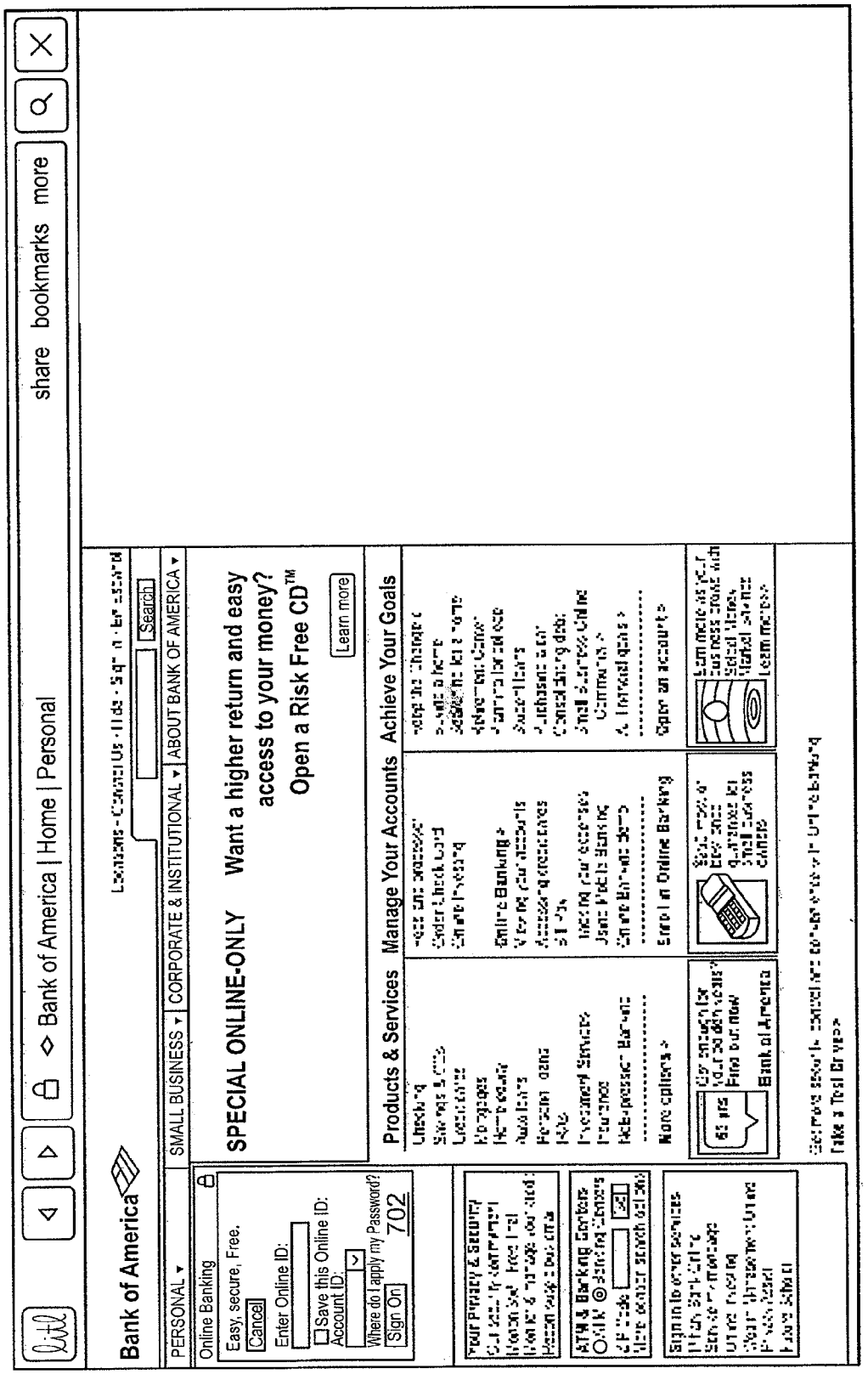
Bank of America | Home | Personal
share
bookmarks
more
Bank of America
PERSONAL
SMALL BUSINESS
CORPORATE & INSTITUTIONAL
ABOUT BANK OF AMERICA
Search
Online Banking
Easy, secure, Free.
Cancel
Enter Online ID:
Save this Online ID:
Account ID:
Where do I apply my Password?
Sign On
702
SPECIAL ONLINE-ONLY
Want a higher return and easy access to your money?
Open a Risk Free CD™
Learn more
Products & Services
Manage Your Accounts
Achieve Your Goals
Bank of America

FIG. 7A

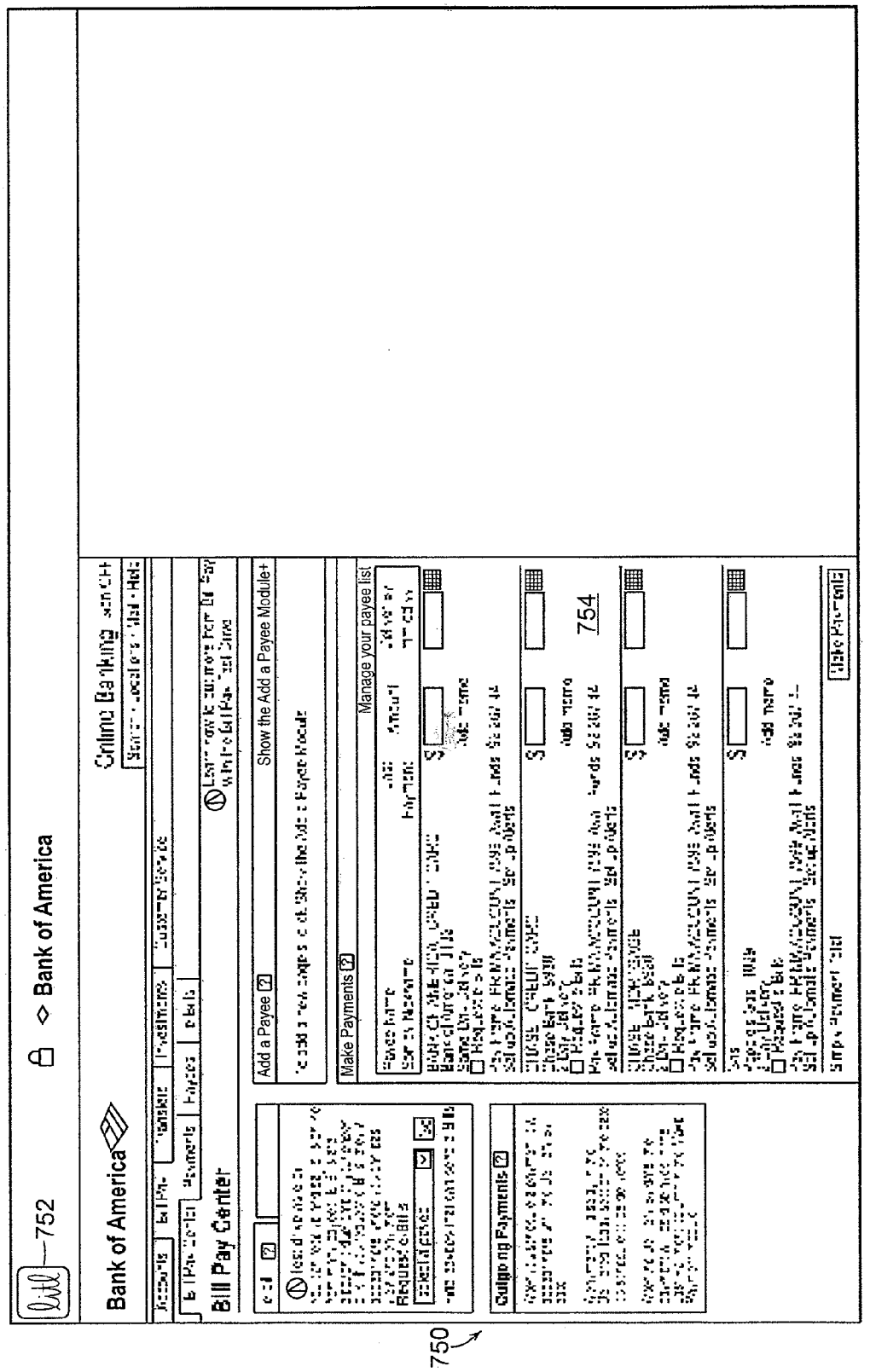
752
Bank of America
Bill Pay Center
Add a Payee
Show the Add a Payee Module+
Make Payments
Manage your payee list
Outgoing Payments
754
750

FIG. 7B

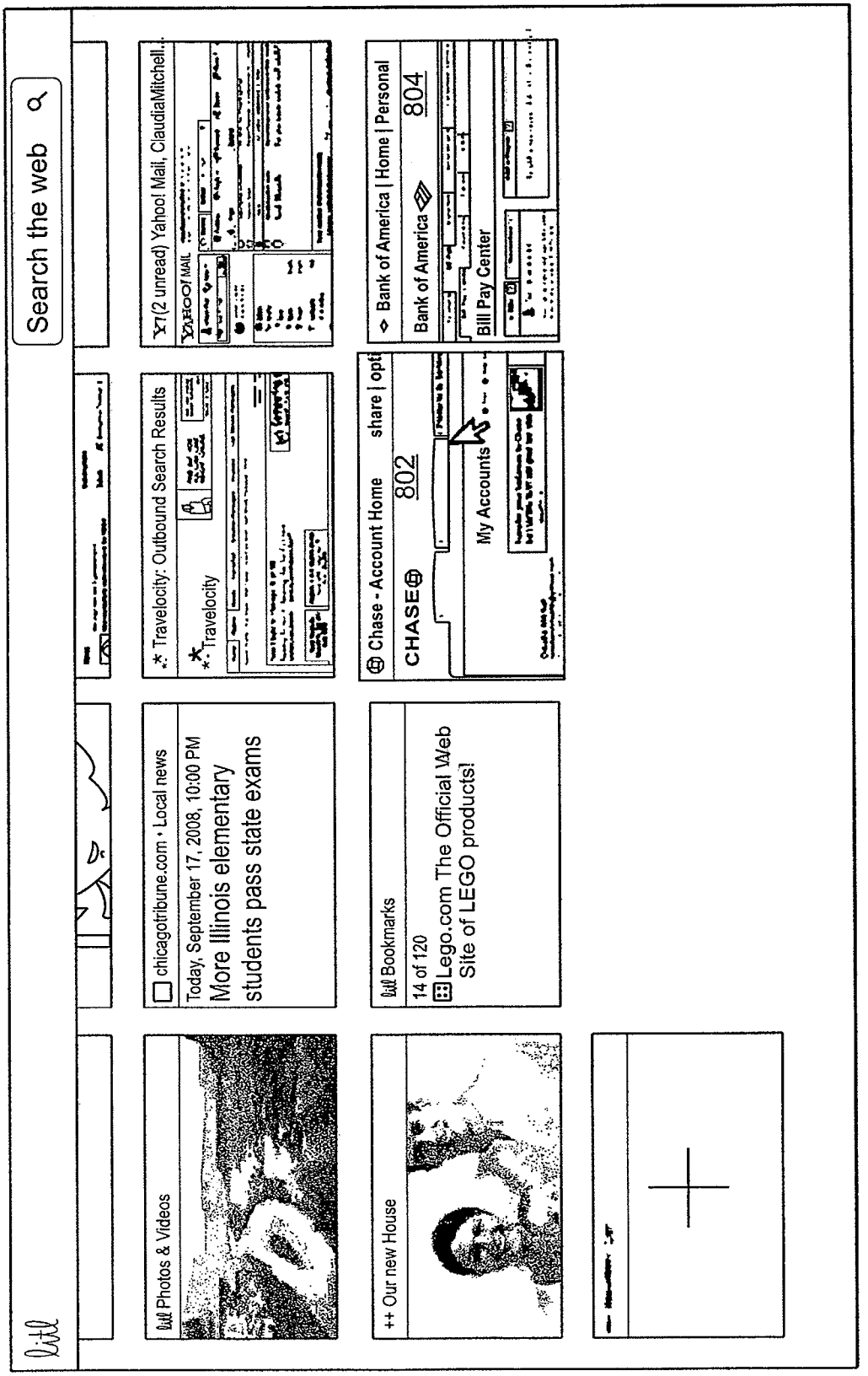
Search the web
Photos & Videos
chicagotribune.com • Local news
Today, September 17, 2008, 10:00 PM
More Illinois elementary students pass state exams
Travelocity: Outbound Search Results
Travelocity
(2 unread) Yahoo! Mail, ClaudiaMitchell...
YAHOO! MAIL
Bookmarks
14 of 120
Lego.com The Official Web Site of LEGO products!
Chase - Account Home
share | opti
CHASE
802
My Accounts
Bank of America | Home | Personal
Bank of America
804
Bill Pay Center
++ Our new House

FIG. 8

800

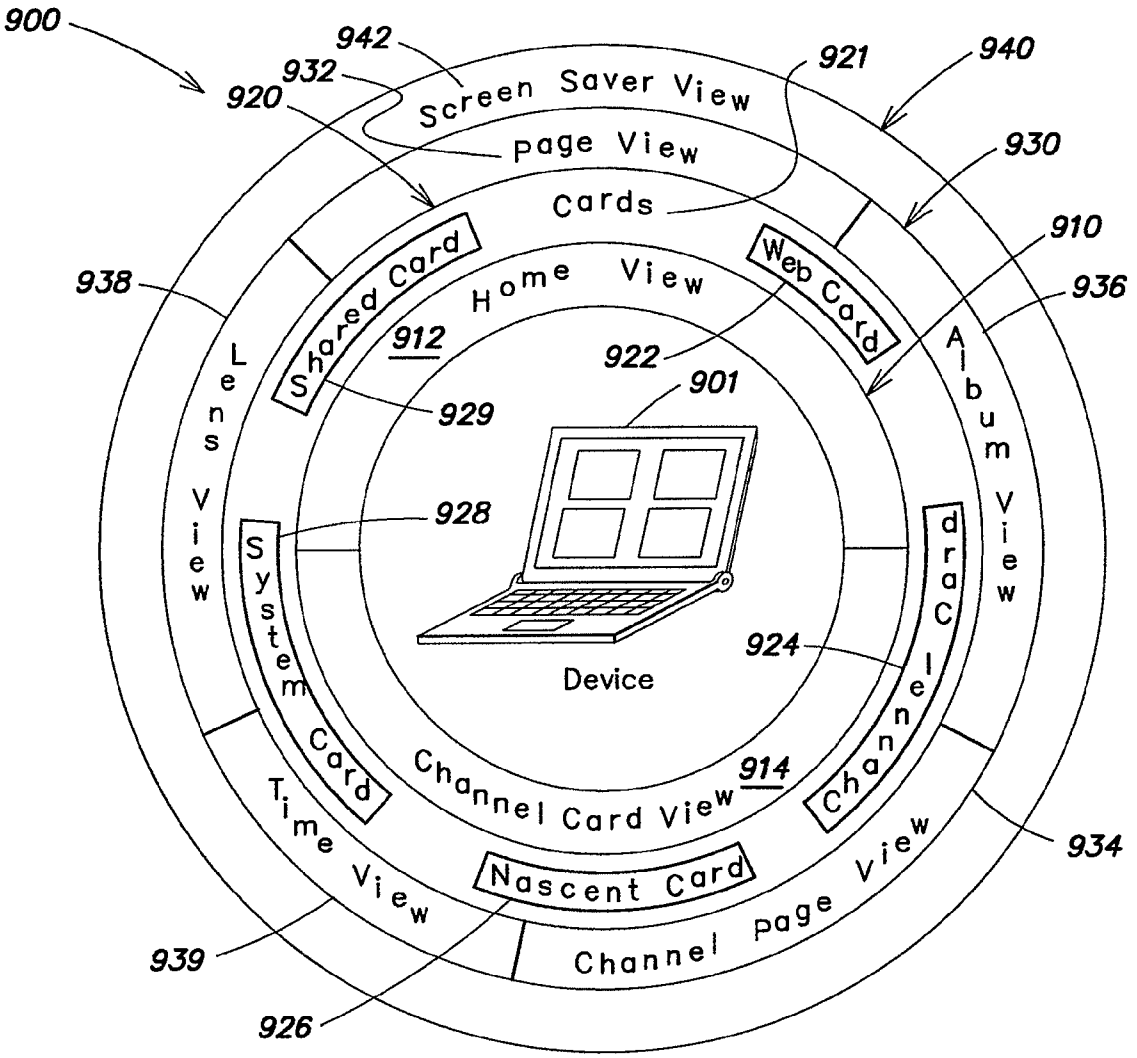
900
942
932
920
921
940
Screen Saver View
page View
Cards
930
910
938
936
Shared Card
Home View
Web Card
912
922
901
929
Lens View
Album View
928
System Card
Track Channel
924
Device
Channel Card View
914
Time View
Nascent Card
Channel page View
934
939
926

FIG. 9

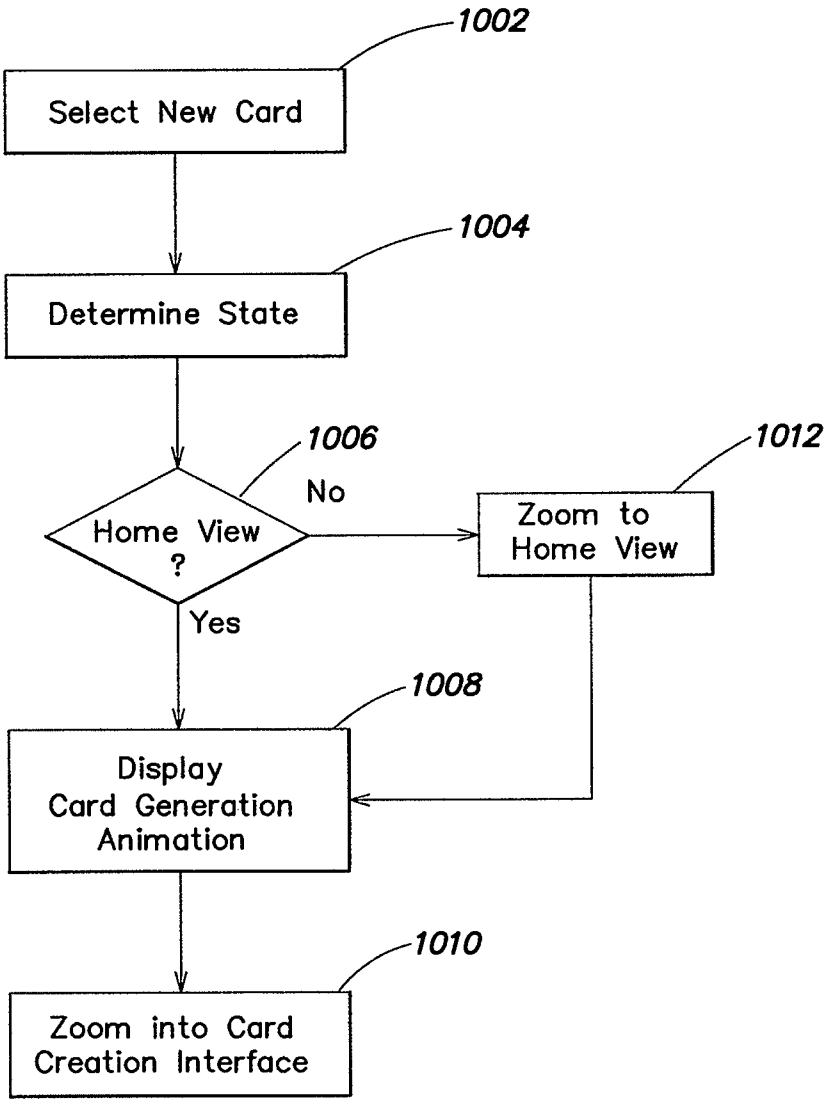
1002
Select New Card
1004
Determine State
1006
Home View ?
No
Yes
1012
Zoom to Home View
1008
Display Card Generation Animation
1010
Zoom into Card Creation Interface

FIG. 10

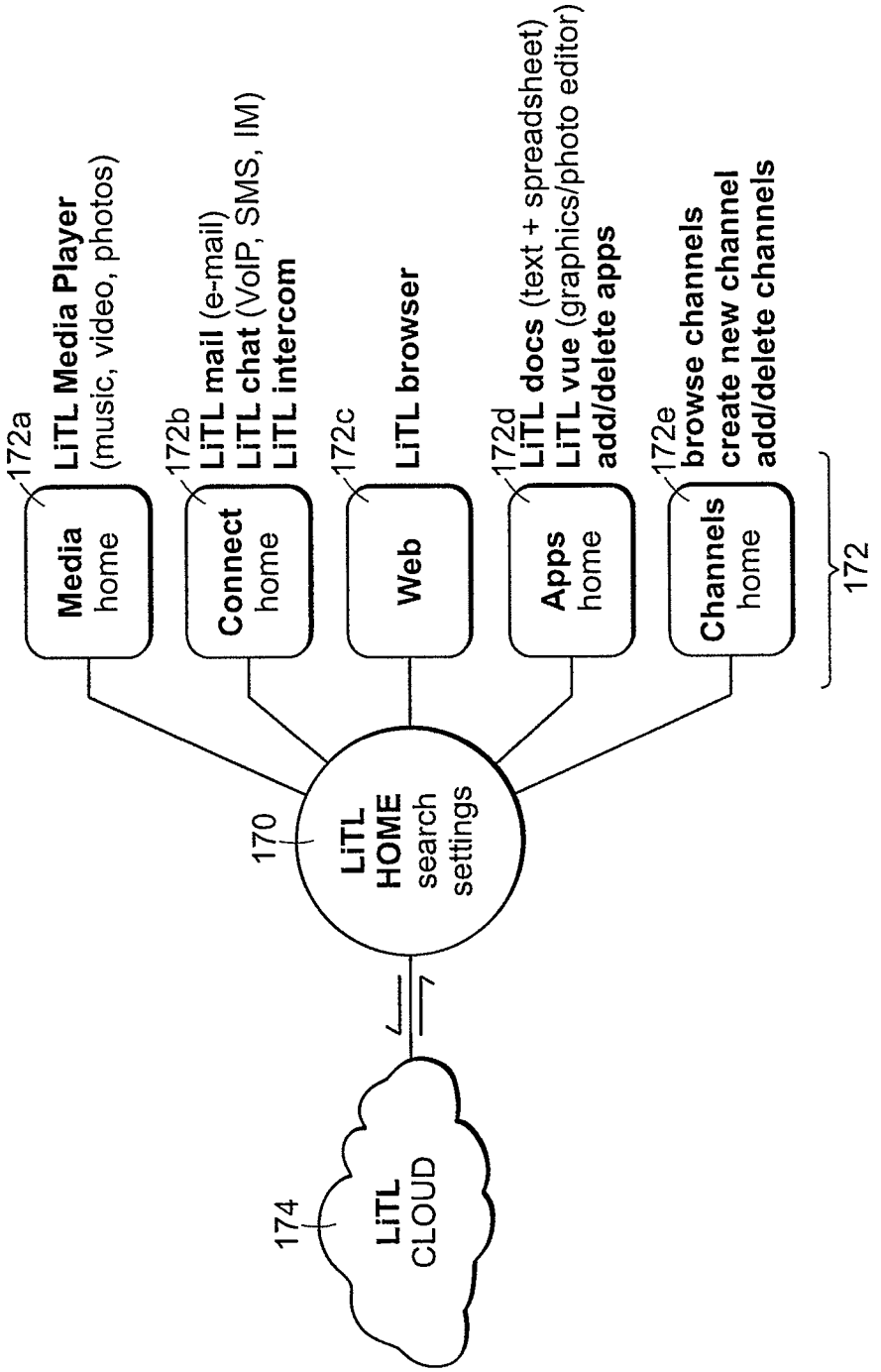
172a
Media
home
LiTL Media Player
(music, video, photos)
172b
Connect
home
LiTL mail (e-mail)
LiTL chat (VoIP, SMS, IM)
LiTL intercom
172c
Web
LiTL browser
172d
Apps
home
LiTL docs (text + spreadsheet)
LiTL vue (graphics/photo editor)
add/delete apps
172e
Channels
home
browse channels
create new channel
add/delete channels
172
170
LiTL
HOME
search
settings
174
LiTL
CLOUD

FIG. 11

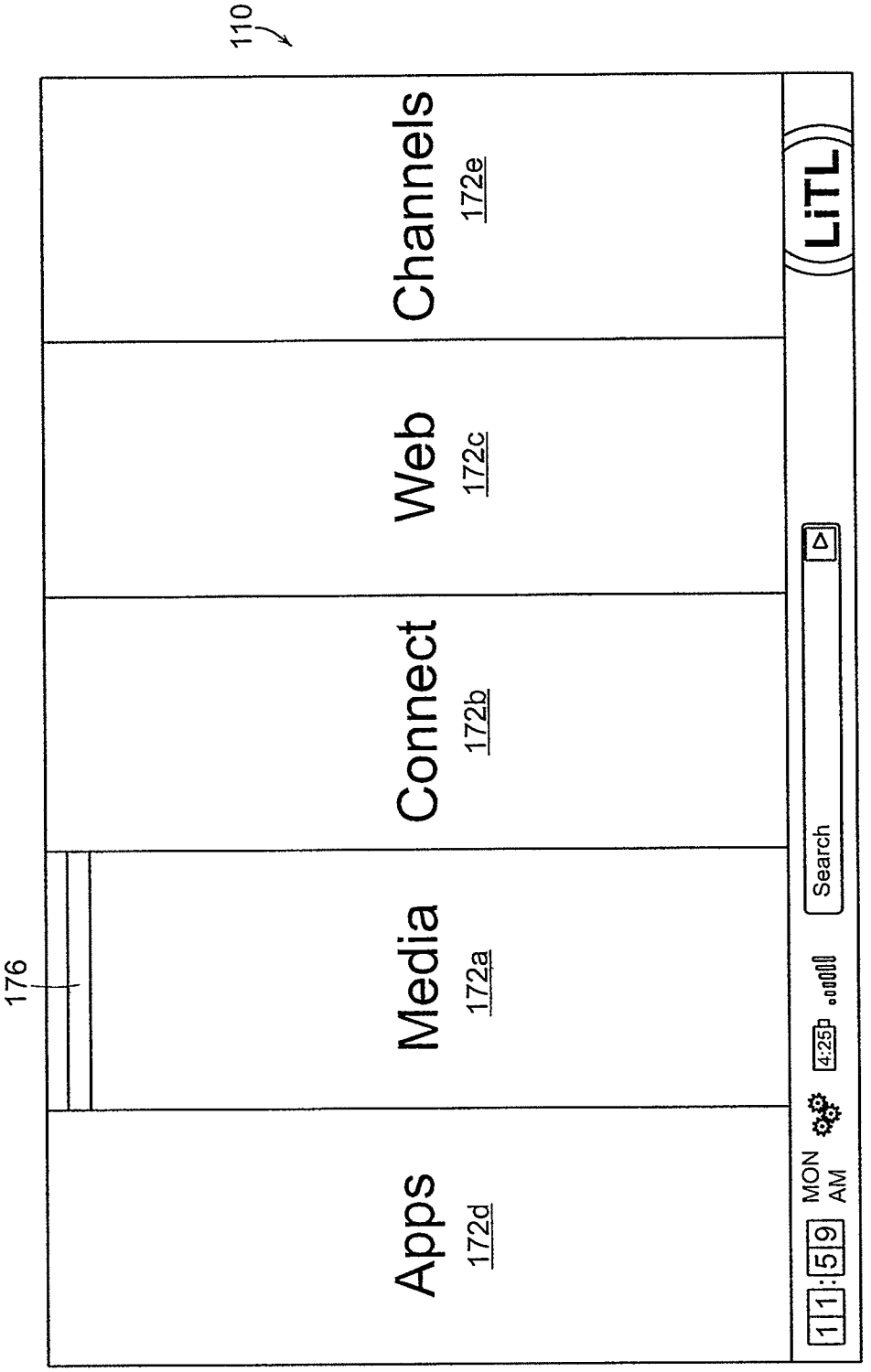
110
176
Apps
172d
Media
172a
Connect
172b
Web
172c
Channels
172e
11:59
MON
AM
4:25p
Search
LiTL

FIG. 12

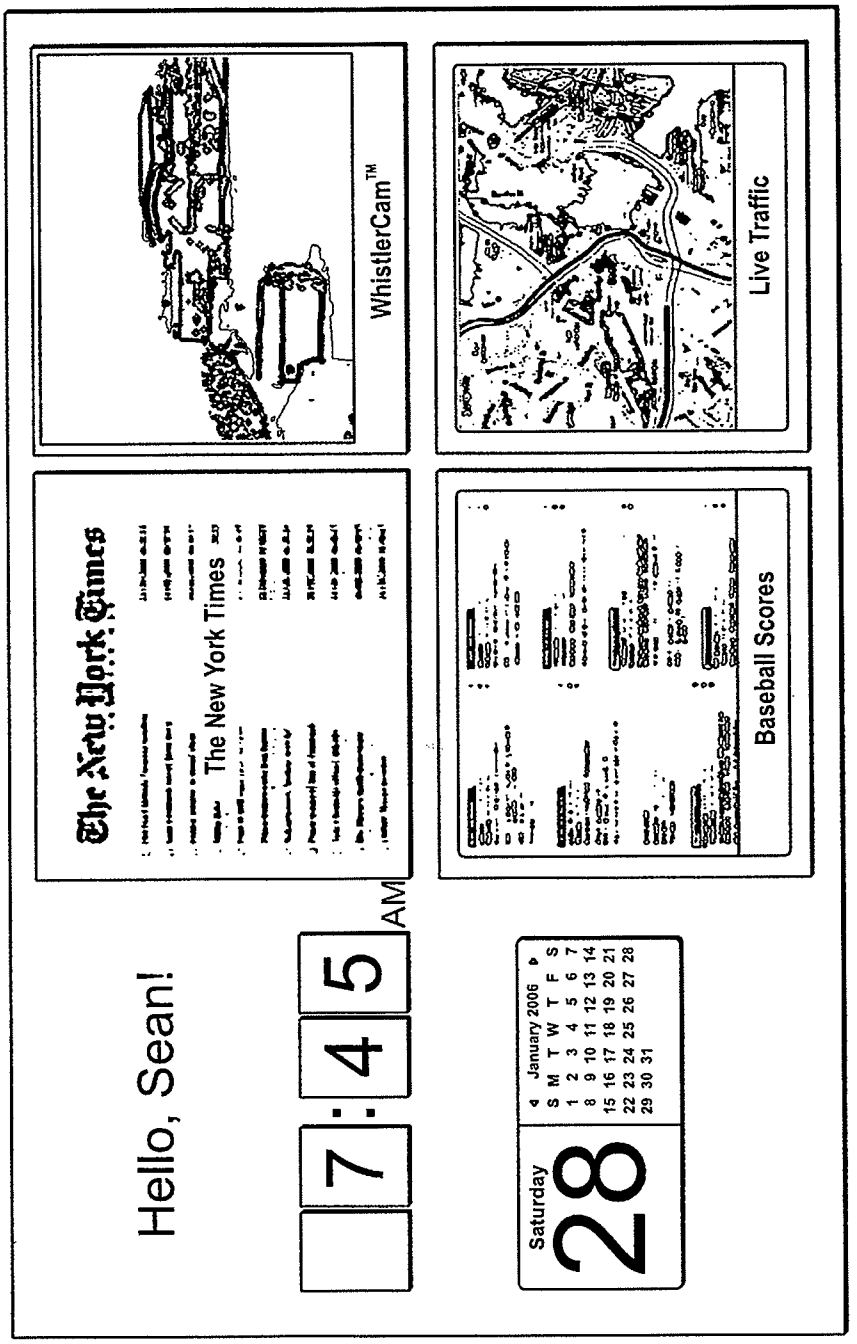
Hello, Sean!
7 : 4 5 AM
The New York Times
WhistlerCam™
Live Traffic
Baseball Scores
Saturday
28
January 2006
S M T W T F S
1 2 3 4 5 6 7
8 9 10 11 12 13 14
15 16 17 18 19 20 21
22 23 24 25 26 27 28
29 30 31
110

FIG. 13

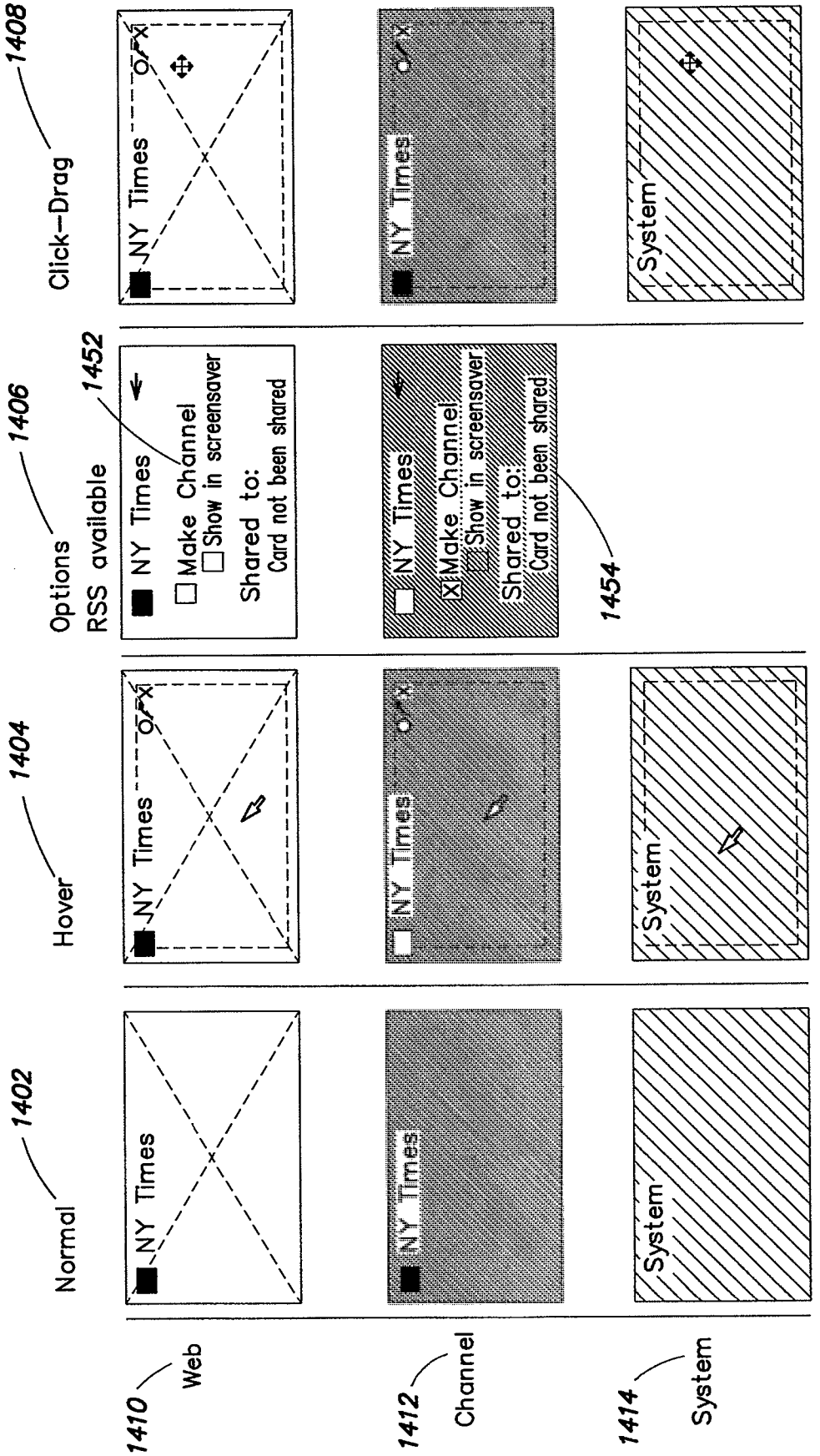
1408
Click–Drag
1406
Options
RSS available
1452
1404
Hover
1402
Normal
NY Times
Make Channel
Show in screensaver
Shared to:
Card not been shared
1454
System
1410
Web
1412
Channel
1414
System

FIG. 14

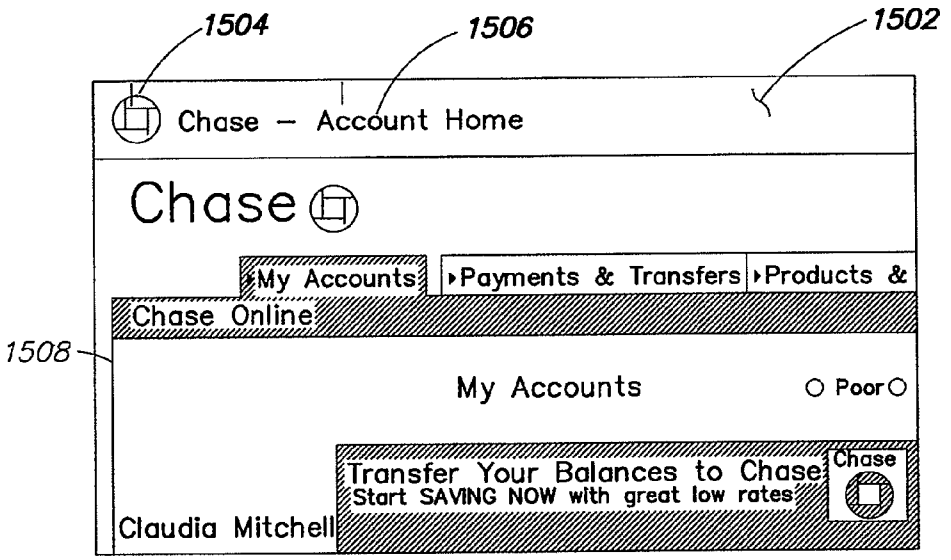

FIG. 15A

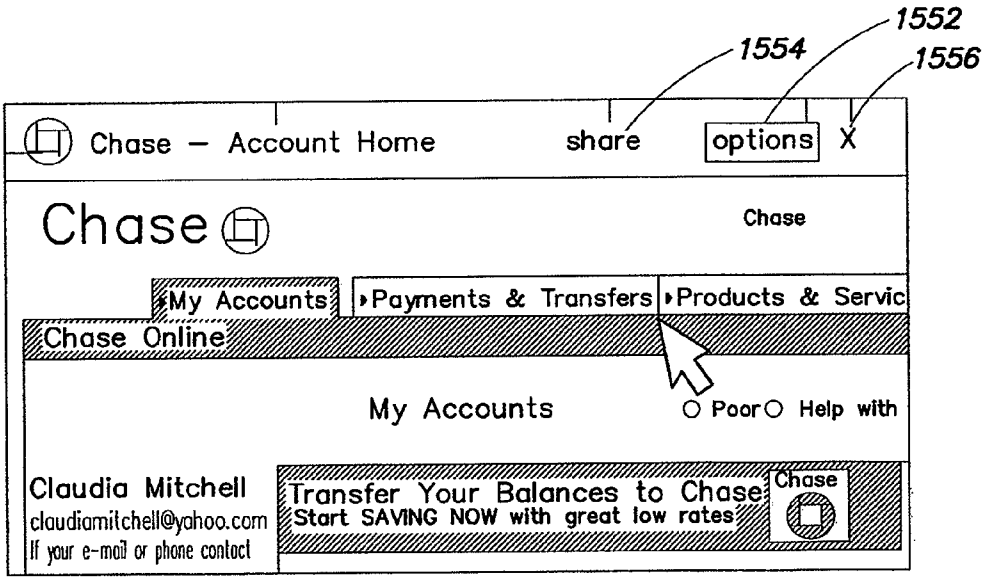

FIG. 15B

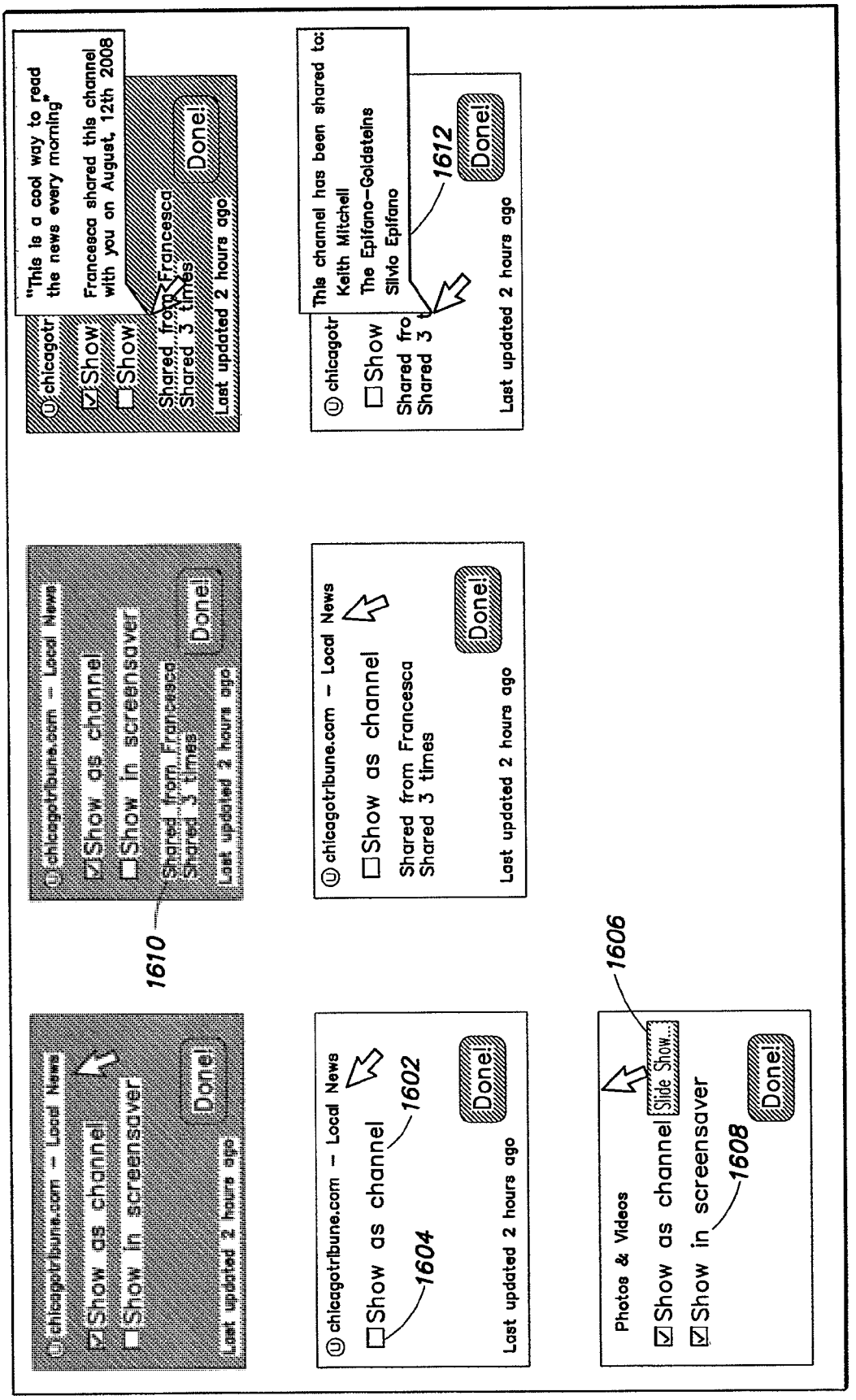
chicagotribune.com – Local News
Show as channel
Show in screensaver
Done!
Last updated 2 hours ago
1604
1602
1610
Photos & Videos
Slide Show...
1606
1608
1612
"This is a cool way to read the news every morning"
Francesca shared this channel with you on August, 12th 2008
Shared from Francesca
Shared 3 times
This channel has been shared to:
Keith Mitchell
The Epifano-Goldsteins
Silvio Epifano

FIG. 16

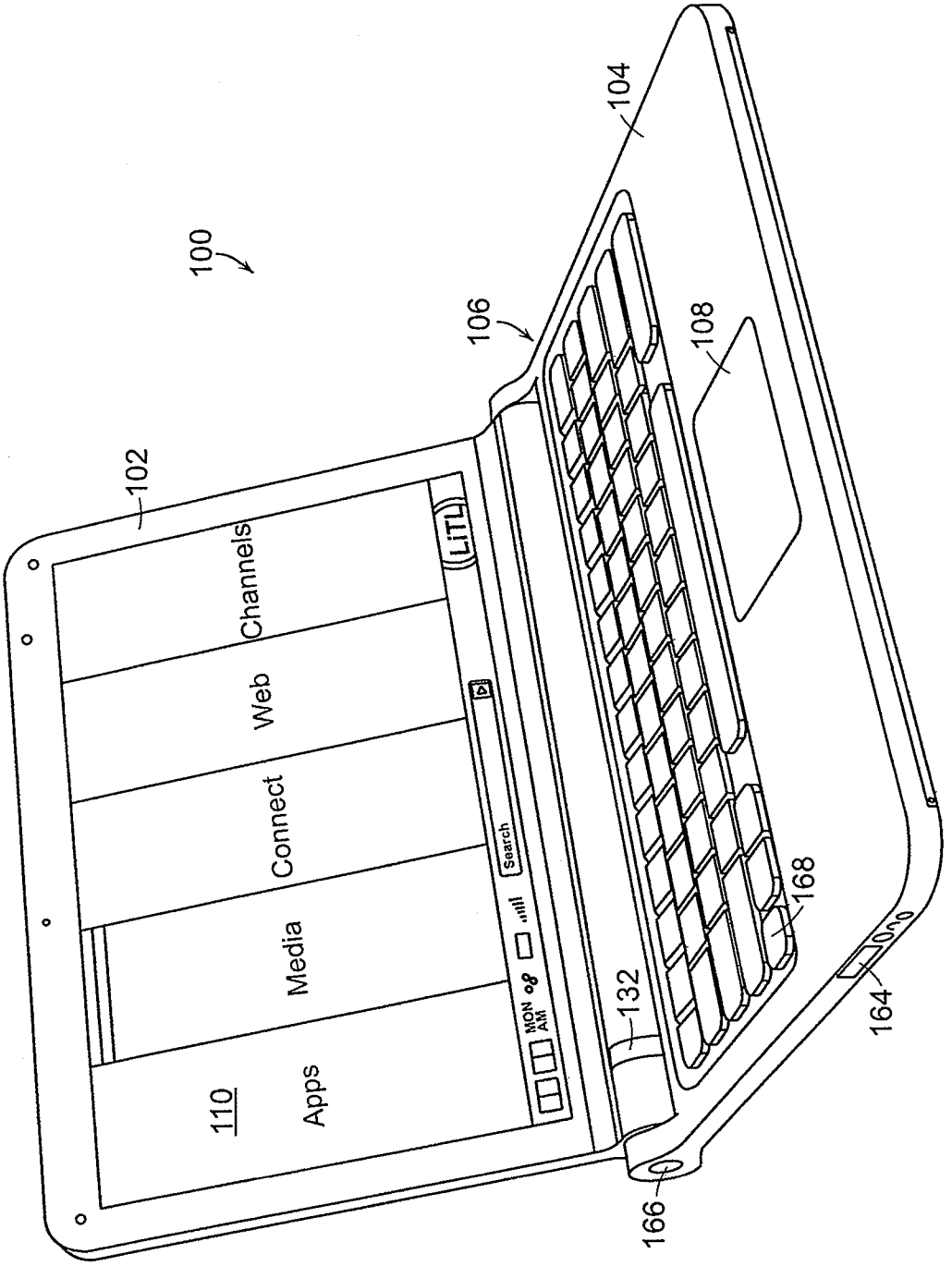
100
102
104
106
108
110
Apps
Media
Connect
Web
Channels
LiTL
Search
MON
AM
132
164
166
168

FIG. 17

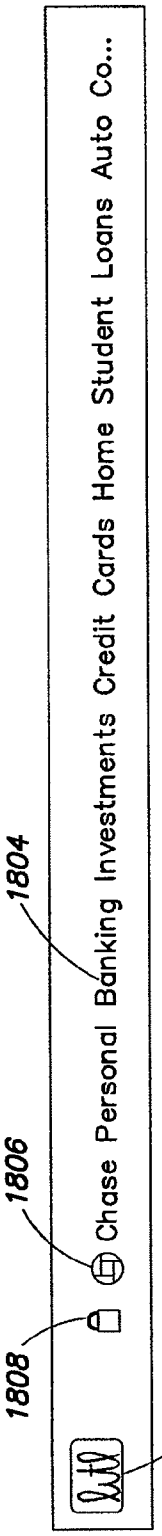

FIG. 18A

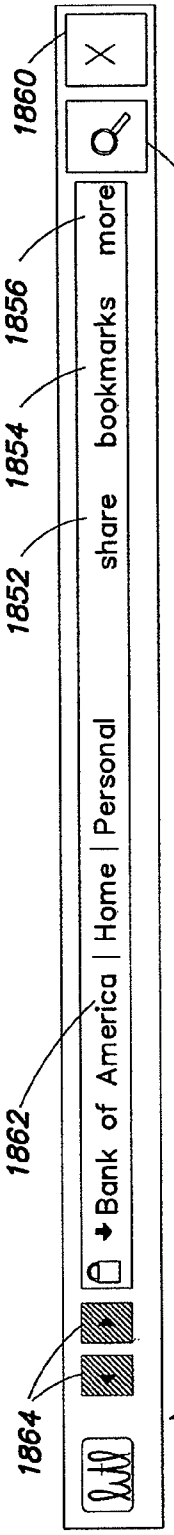

FIG. 18B

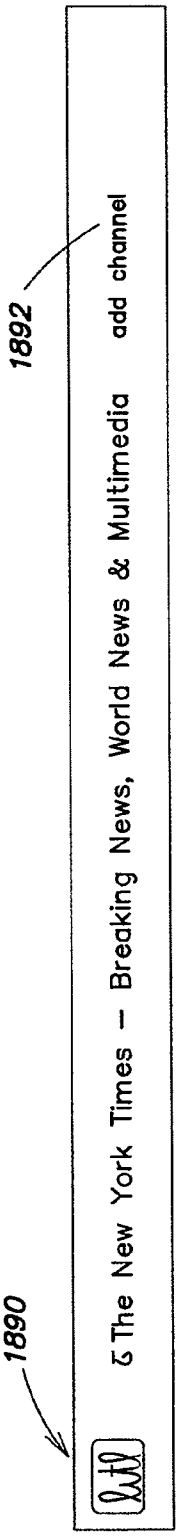

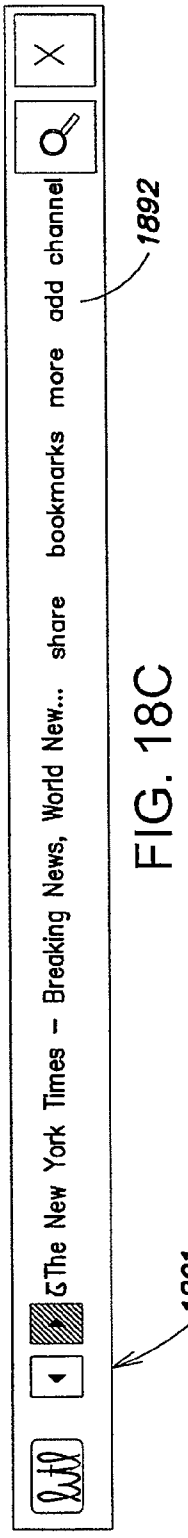

FIG. 18C

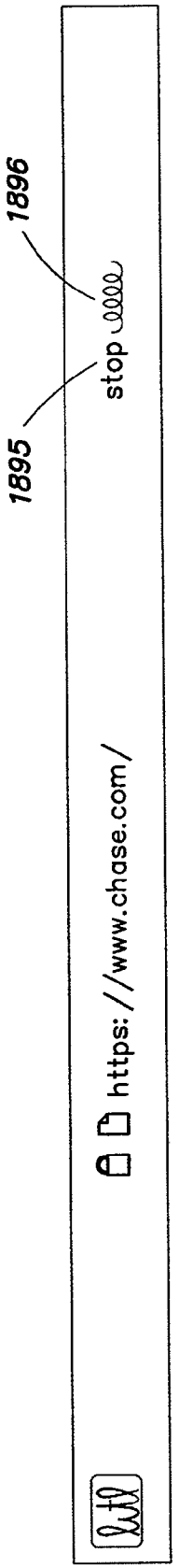

FIG. 18D

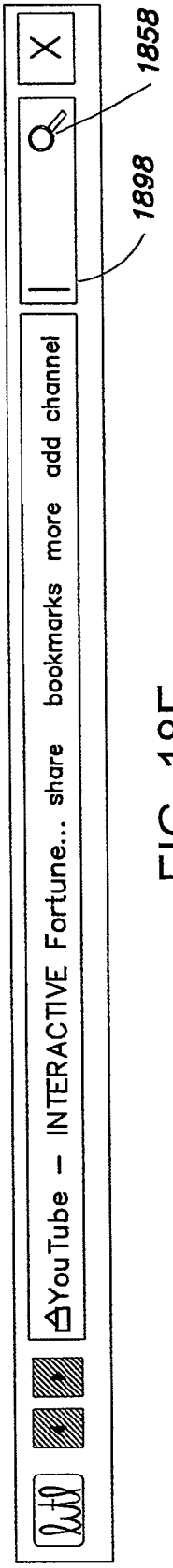

FIG. 18E

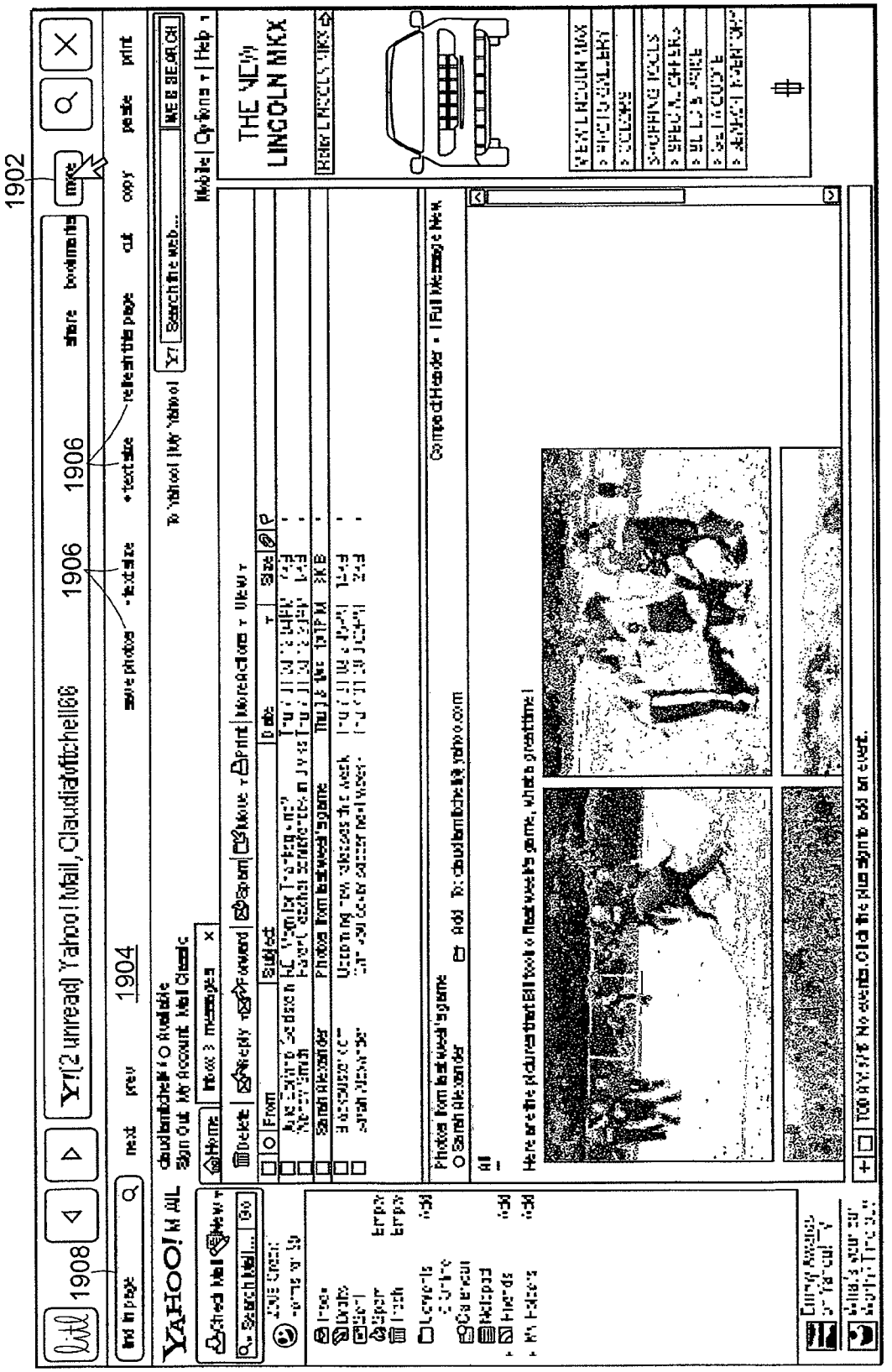

FIG. 19

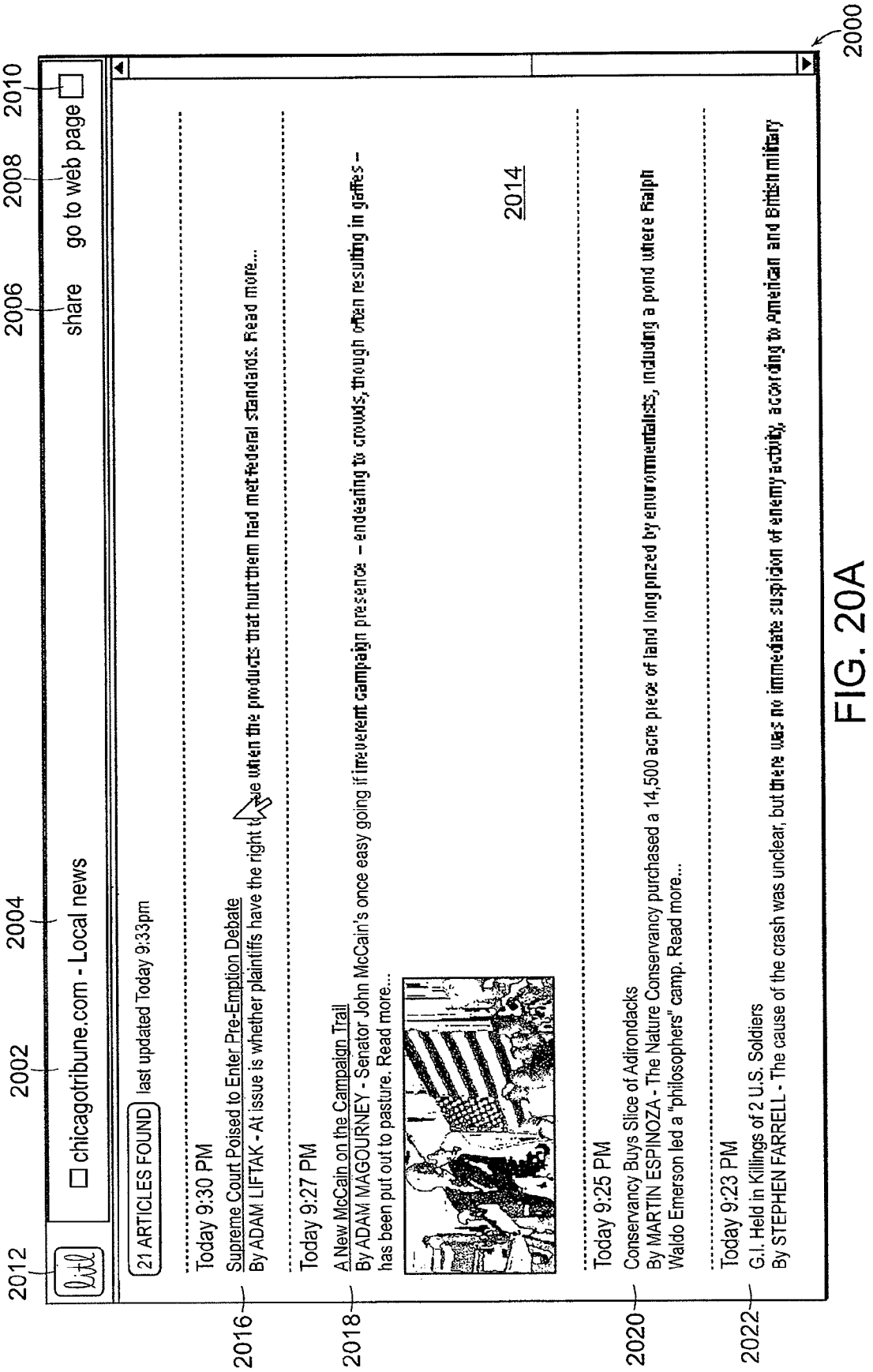
2000
2002
2004
2006
2008
2010
2012
chicagotribune.com - Local news
share
go to web page
21 ARTICLES FOUND
last updated Today 9:33pm
2016
Today 9:30 PM
Supreme Court Poised to Enter Pre-Emption Debate
By ADAM LIFTAK - At issue is whether plaintiffs have the right to sue when the products that hurt them had met federal standards. Read more...
2018
Today 9:27 PM
A New McCain on the Campaign Trail
By ADAM MAGOURNEY - Senator John McCain's once easy going if irreverent campaign presence -- endearing to crowds, though often resulting in gaffes -- has been put out to pasture. Read more...
2014
2020
Today 9:25 PM
Conservancy Buys Slice of Adirondacks
By MARTIN ESPINOZA - The Nature Conservancy purchased a 14,500 acre piece of land long prized by environmentalists, including a pond where Ralph Waldo Emerson led a "philosophers" camp. Read more...
2022
Today 9:23 PM
G.I. Held in Killings of 2 U.S. Soldiers
By STEPHEN FARRELL - The cause of the crash was unclear, but there was no immediate suspicion of enemy activity, according to American and British military

FIG. 20A

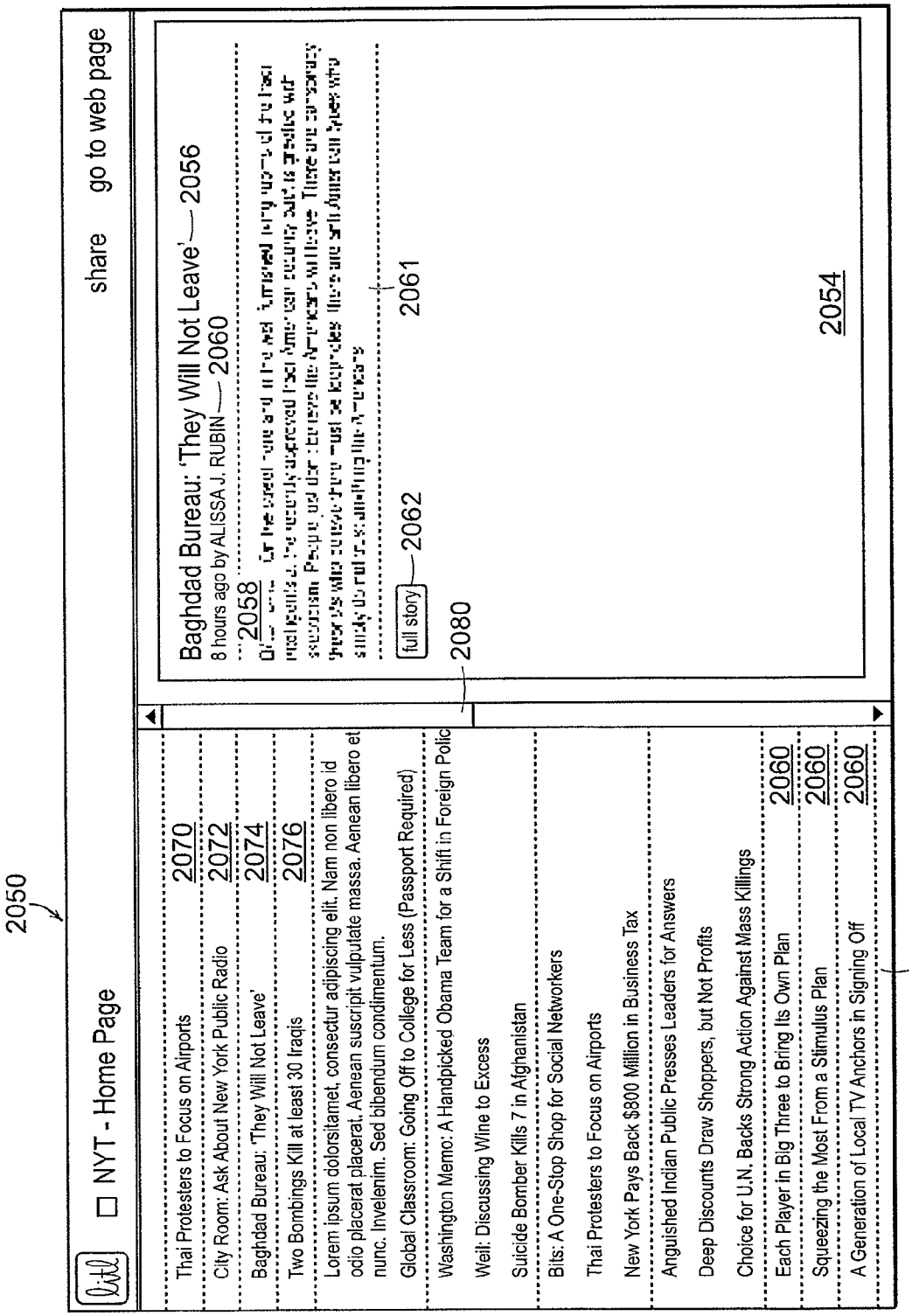
2050
NYT - Home Page
share
go to web page
Thai Protesters to Focus on Airports 2070
City Room: Ask About New York Public Radio 2072
Baghdad Bureau: 'They Will Not Leave' 2074
Two Bombings Kill at least 30 Iraqis 2076
Lorem ipsum dolorsitamet, consectur adipiscing elit. Nam non libero id odio placerat placerat. Aenean suscripit vulputate massa. Aenean libero et nunc. Invelenim. Sed bibendum condimentum.
Global Classroom: Going Off to College for Less (Passport Required)
Washington Memo: A Handpicked Obama Team for a Shift in Foreign Polic
Well: Discussing Wine to Excess
Suicide Bomber Kills 7 in Afghanistan
Bits: A One-Stop Shop for Social Networkers
Thai Protesters to Focus on Airports
New York Pays Back $800 Million in Business Tax
Anguished Indian Public Presses Leaders for Answers
Deep Discounts Draw Shoppers, but Not Profits
Choice for U.N. Backs Strong Action Against Mass Killings
Each Player in Big Three to Bring Its Own Plan 2060
Squeezing the Most From a Stimulus Plan 2060
A Generation of Local TV Anchors in Signing Off 2060
2052
2080
Baghdad Bureau: 'They Will Not Leave' 2056
8 hours ago by ALISSA J. RUBIN 2060
2058
full story 2062
2061
2054

FIG. 20B

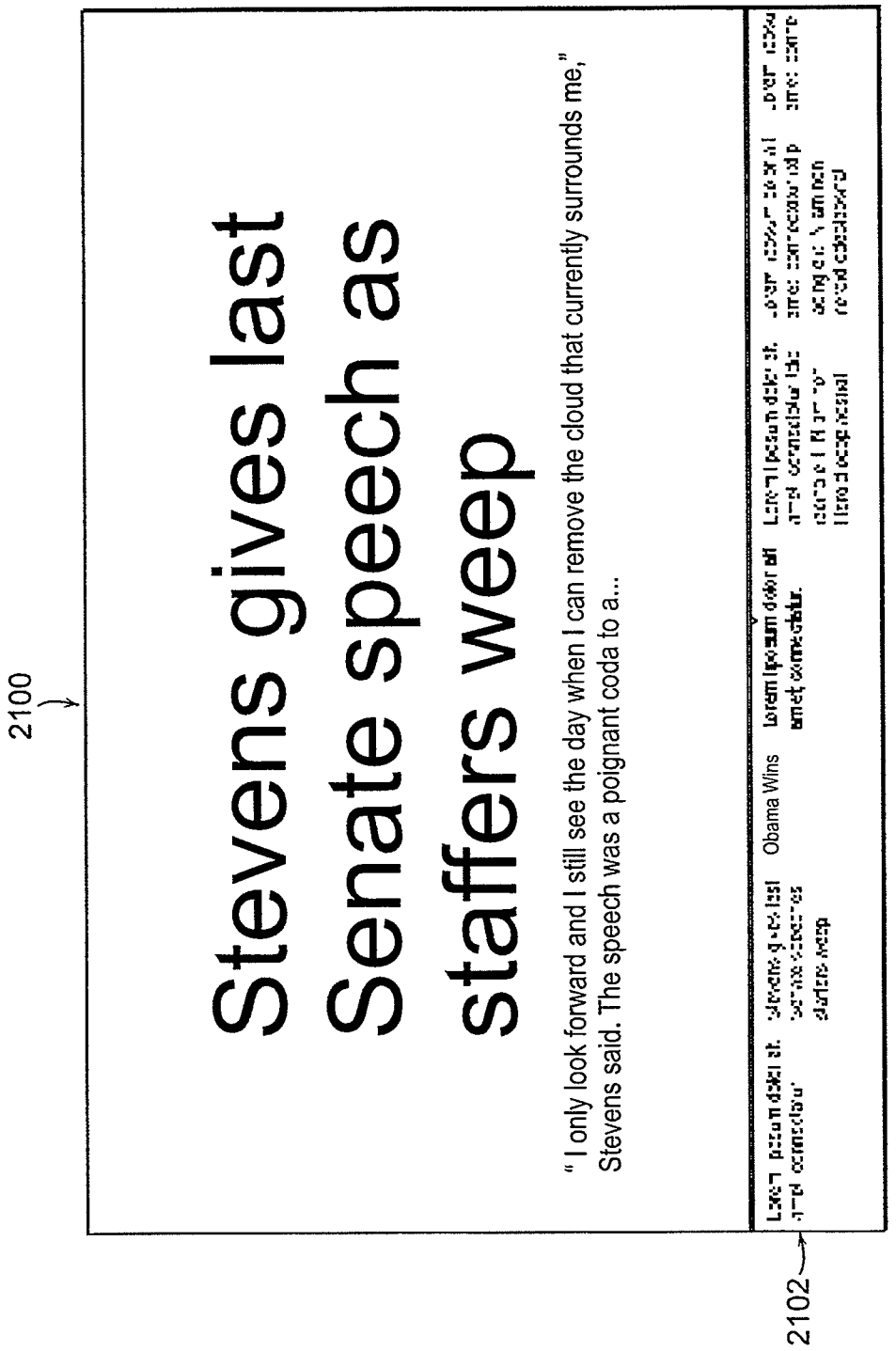
2100
Stevens gives last Senate speech as staffers weep
" I only look forward and I still see the day when I can remove the cloud that currently surrounds me," Stevens said. The speech was a poignant coda to a...
Obama Wins
2102

FIG. 21

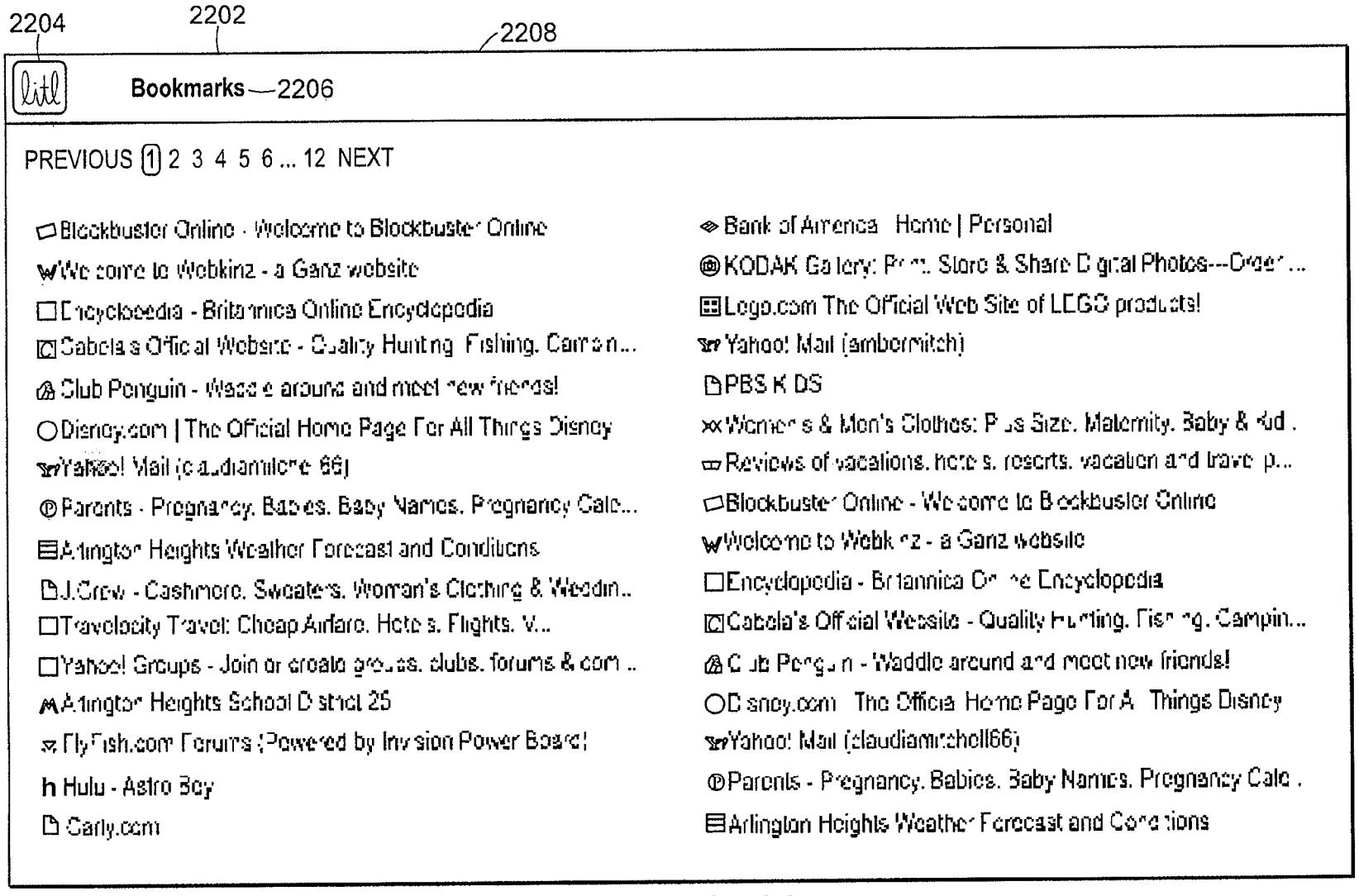
2204
2202
2208
Bookmarks—2206
PREVIOUS 1 2 3 4 5 6 ... 12 NEXT
Blockbuster Online - Welcome to Blockbuster Online
Welcome to Webkinz - a Ganz website
Encyclopedia - Britannica Online Encyclopedia
Cabela's Official Website - Quality Hunting, Fishing, Camping...
Club Penguin - Waddle around and meet new friends!
Disney.com | The Official Home Page For All Things Disney
Yahoo! Mail (claudiamitchell66)
Parents - Pregnancy, Babies, Baby Names, Pregnancy Calc...
Arlington Heights Weather Forecast and Conditions
J.Crew - Cashmere, Sweaters, Woman's Clothing & Wedding...
Travelocity Travel: Cheap Airfare, Hotels, Flights, V...
Yahoo! Groups - Join or create groups, clubs, forums & com...
Arlington Heights School District 25
FlyFish.com Forums (Powered by Invision Power Board)
Hulu - Astro Boy
Carly.com
Bank of America - Home | Personal
KODAK Gallery: Print, Store & Share Digital Photos---Order...
Lego.com The Official Web Site of LEGO products!
Yahoo! Mail (ambermitch)
PBS KIDS
Women's & Men's Clothes: Plus Size, Maternity, Baby & Kid...
Reviews of vacations, hotels, resorts, vacation and travel p...
Blockbuster Online - Welcome to Blockbuster Online
Welcome to Webkinz - a Ganz website
Encyclopedia - Britannica Online Encyclopedia
Cabela's Official Website - Quality Hunting, Fishing, Camping...
Club Penguin - Waddle around and meet new friends!
Disney.com The Official Home Page For All Things Disney
Yahoo! Mail (claudiamitchell66)
Parents - Pregnancy, Babies, Baby Names, Pregnancy Calc...
Arlington Heights Weather Forecast and Conditions

FIG. 22

2302
2310
2308
2306
2304
Video Messages 1
Mitchell Family
Today at 2:12 PM
Weather: Milan, Italy. Light rain with thunder, 72°F
78°
Venezia
Sorrento
International Herald Tribune
Bush faults China over rights and detentions
THU AUGUST 7, 2008 / 7:30 PM
The White House on Wednesday released critical re

FIG. 23

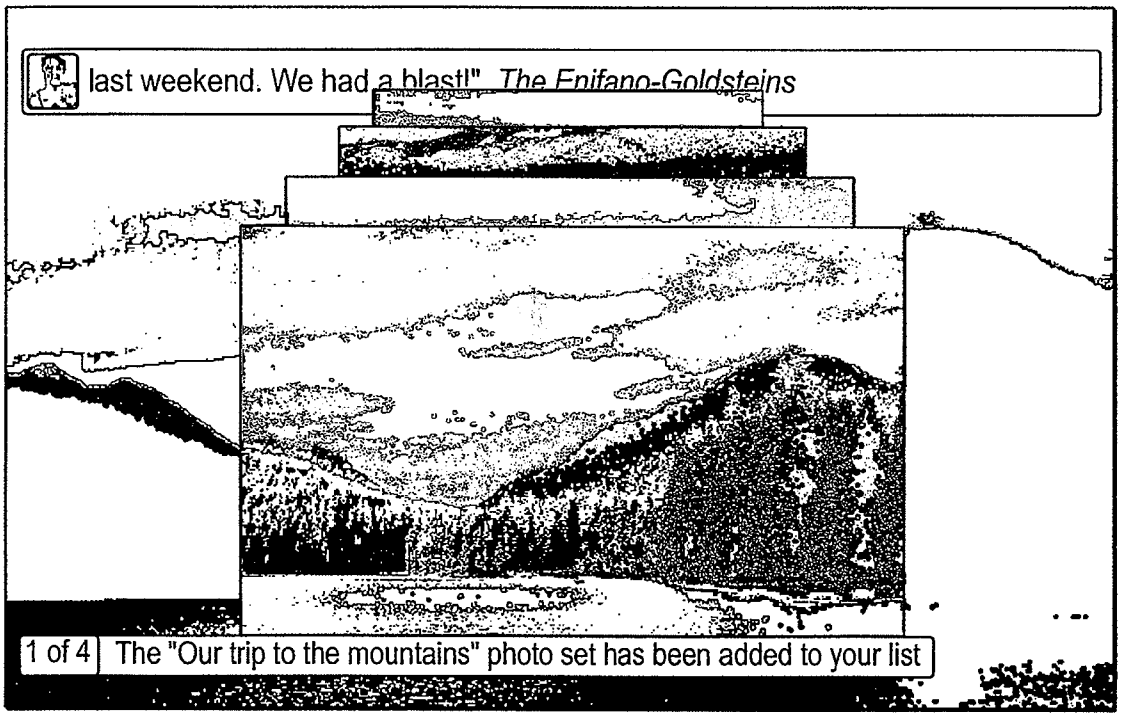
last weekend. We had a blast!" The Enifano-Goldsteins
1 of 4
The "Our trip to the mountains" photo set has been added to your list

FIG. 24

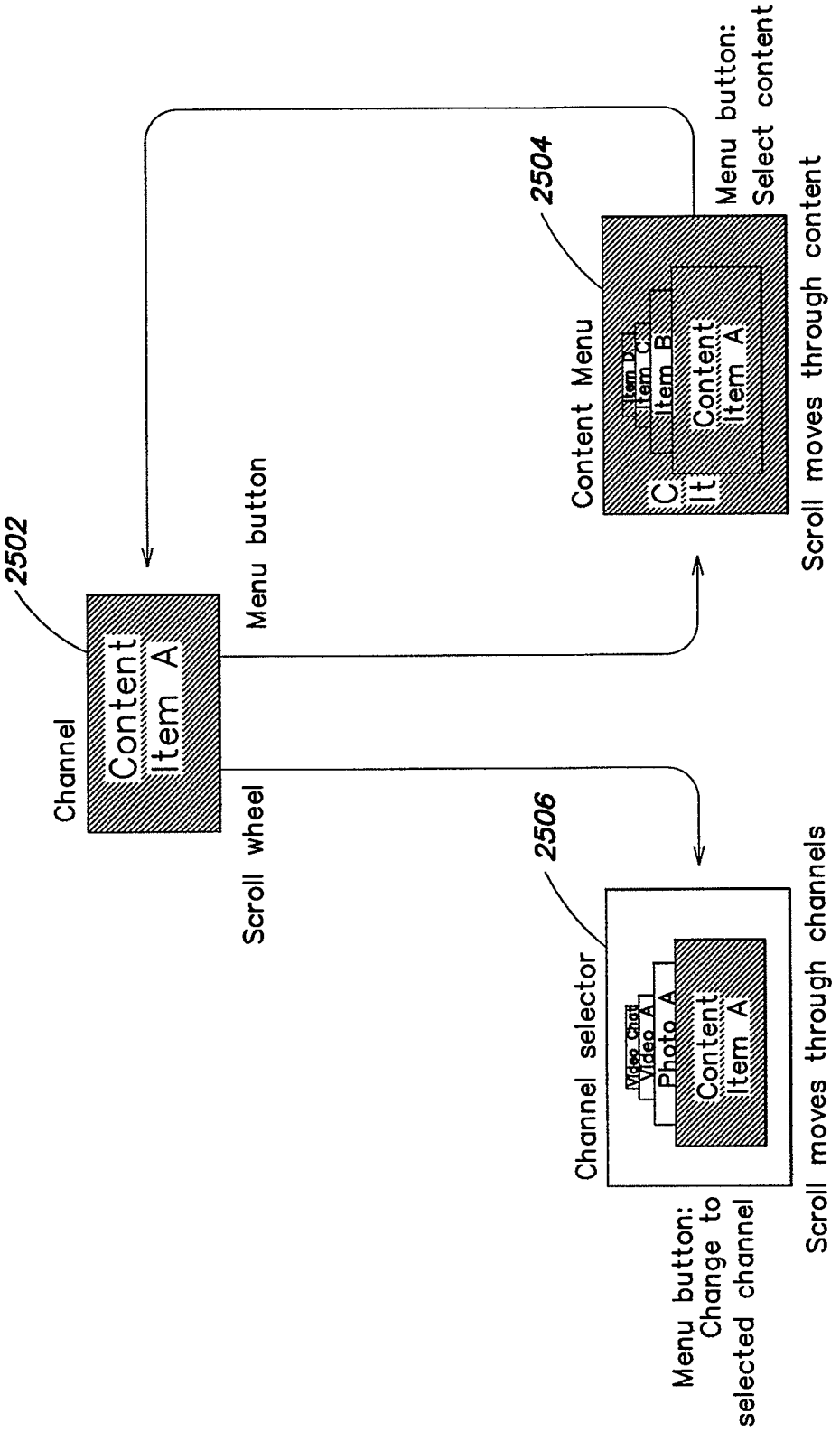
2502
Channel
Content
Item A
Menu button
Scroll wheel
2504
Content Menu
Content
Item A
Item B
Item C
Item D
Menu button:
Select content
Scroll moves through content
2506
Channel selector
Content
Item A
Photo A
Video A
Video Chat
Menu button:
Change to
selected channel
Scroll moves through channels

FIG. 25A

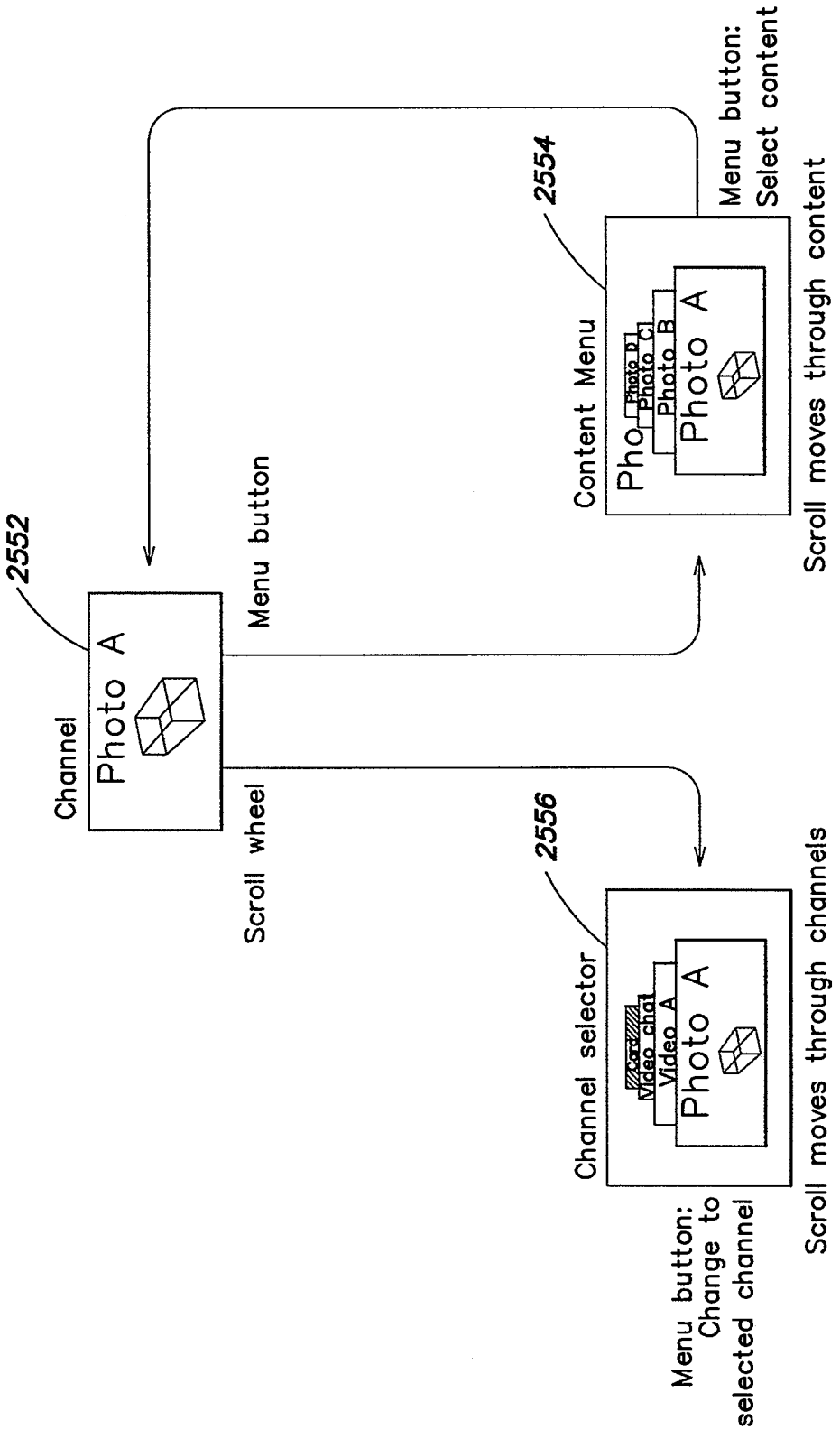
2552
Channel
Photo A
Menu button
Scroll wheel
2554
Content Menu
Photo D
Photo C
Photo B
Photo A
Menu button:
Select content
Scroll moves through content
2556
Channel selector
Video chat
Video A
Photo A
Menu button:
Change to
selected channel
Scroll moves through channels

FIG. 25B

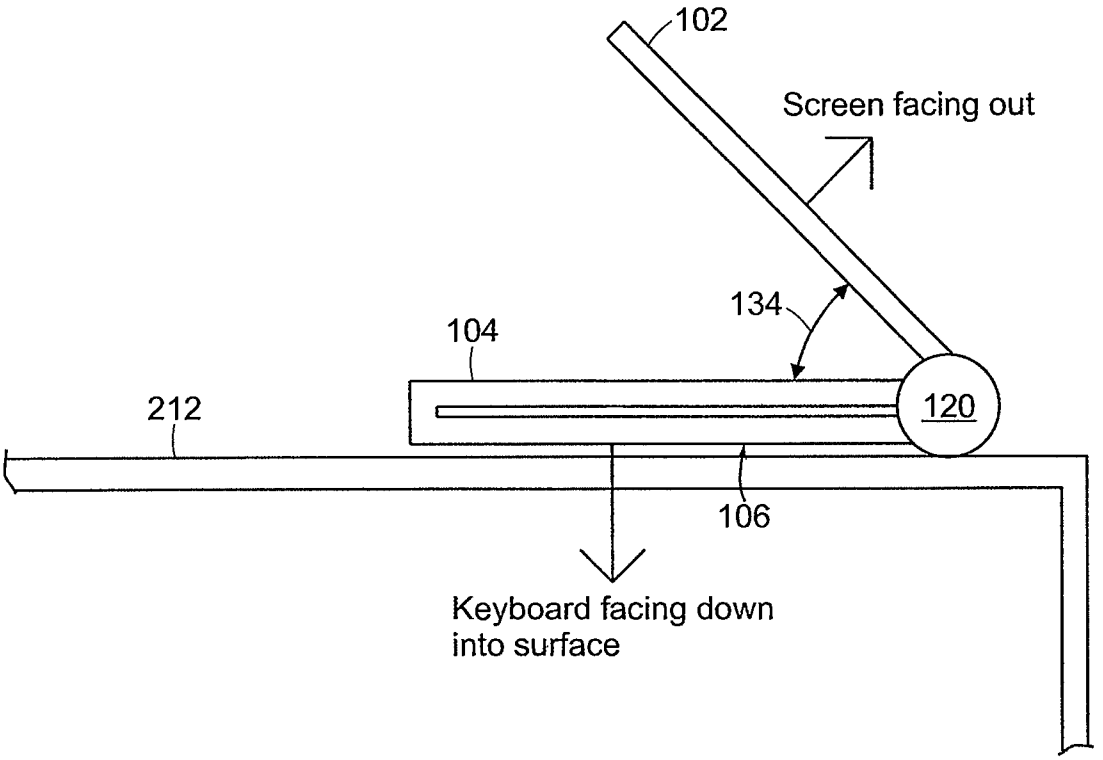
102
Screen facing out
134
104
212
120
106
Keyboard facing down
into surface

FIG. 26

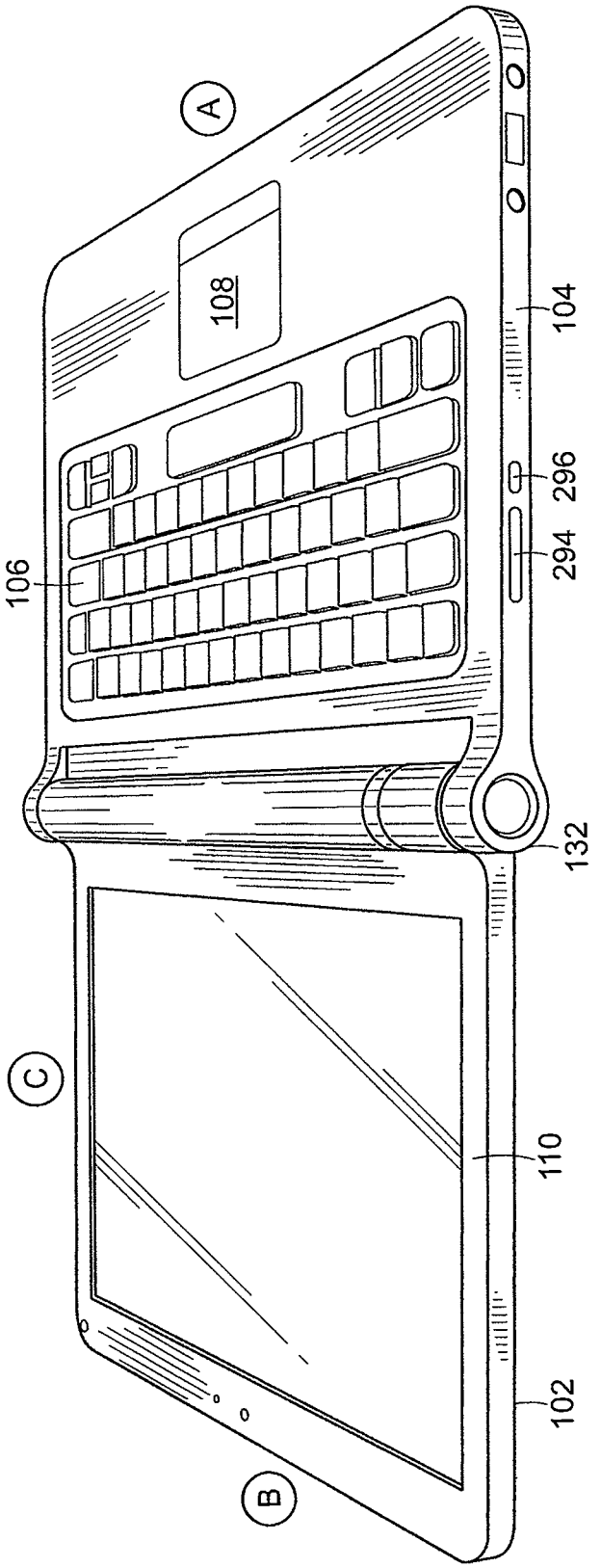

FIG. 27

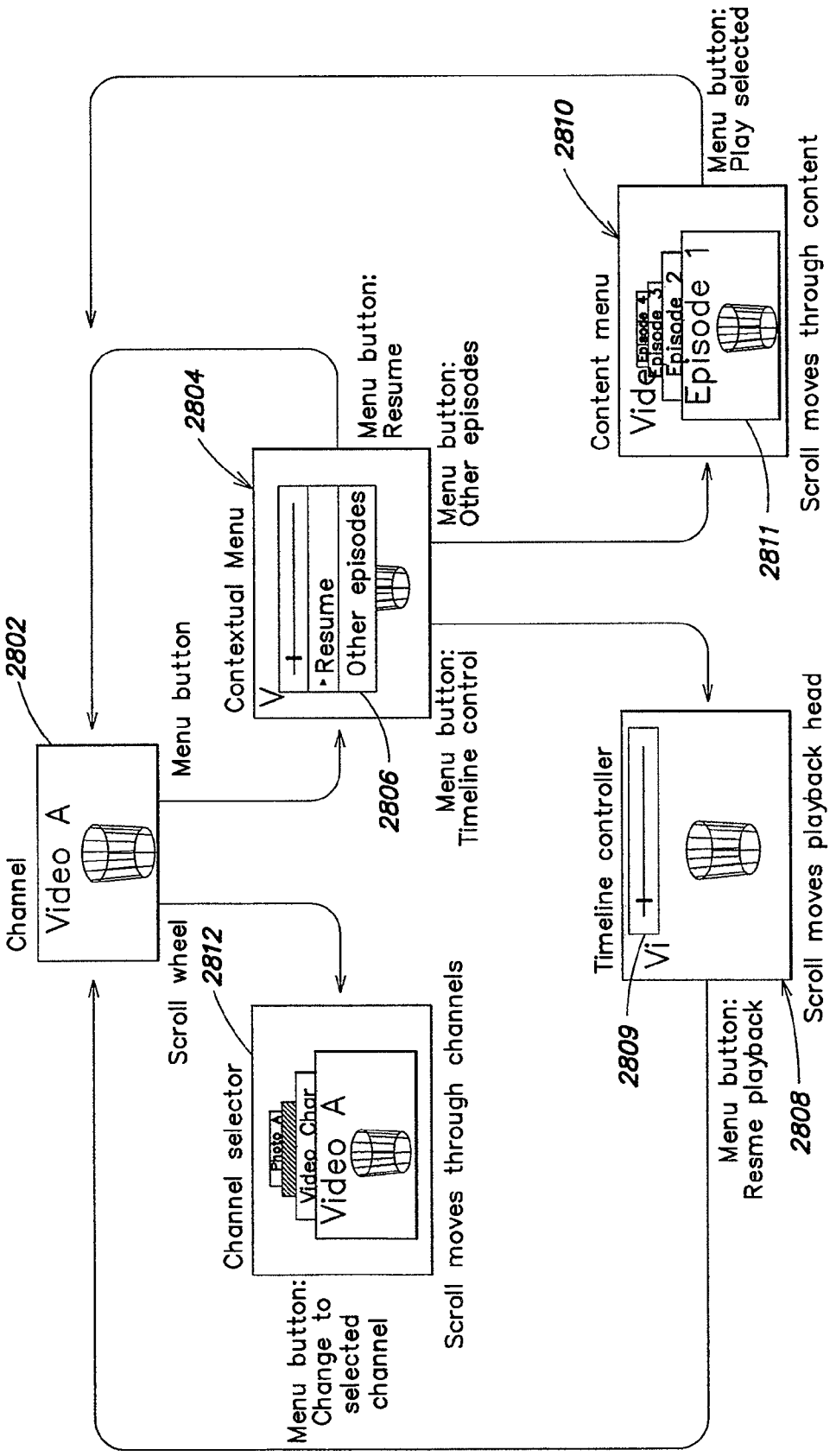
2802
Channel
Video A
Menu button
2804
Contextual Menu
Resume
Other episodes
2806
Menu button: Resume
Menu button: Other episodes
Menu button: Timeline control
2810
Content menu
Episode 1
Episode 2
Episode 3
Episode 4
2811
Menu button: Play selected
Scroll moves through content
Scroll wheel
2812
Channel selector
Video A
Video Char
Photo A
Menu button: Change to selected channel
Scroll moves through channels
Timeline controller
2809
Menu button: Resme playback
2808
Scroll moves playback head

FIG. 28

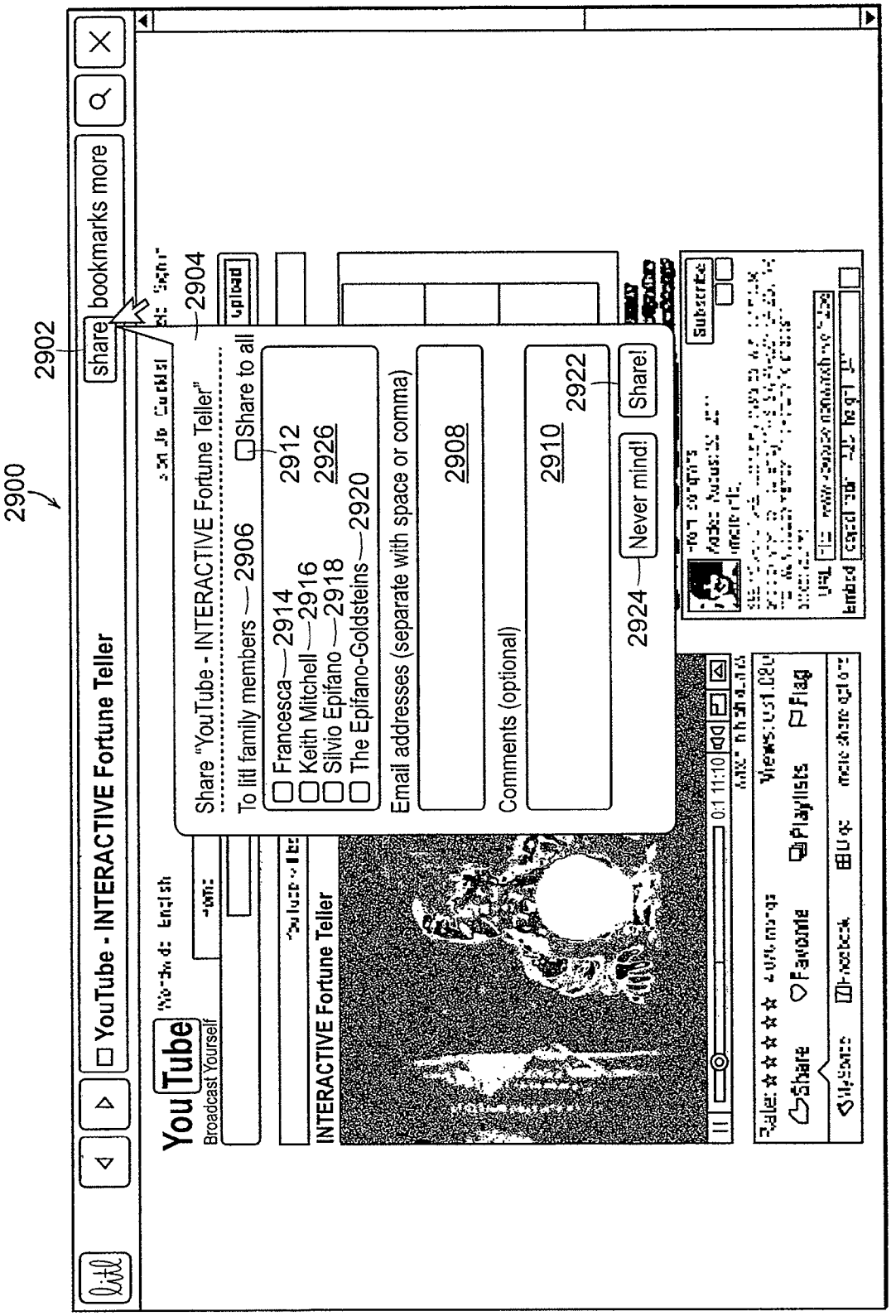
2900
2902
2904
YouTube - INTERACTIVE Fortune Teller
share
bookmarks
more
Share "YouTube - INTERACTIVE Fortune Teller"
To litl family members
2906
Share to all
Francesca
2914
2912
Keith Mitchell
2916
Silvio Epifano
2918
2926
The Epifano-Goldsteins
2920
Email addresses (separate with space or comma)
2908
Comments (optional)
2910
2922
2924
Never mind!
Share!
INTERACTIVE Fortune Teller
Share
Favorite
Playlists
Flag

FIG. 29A

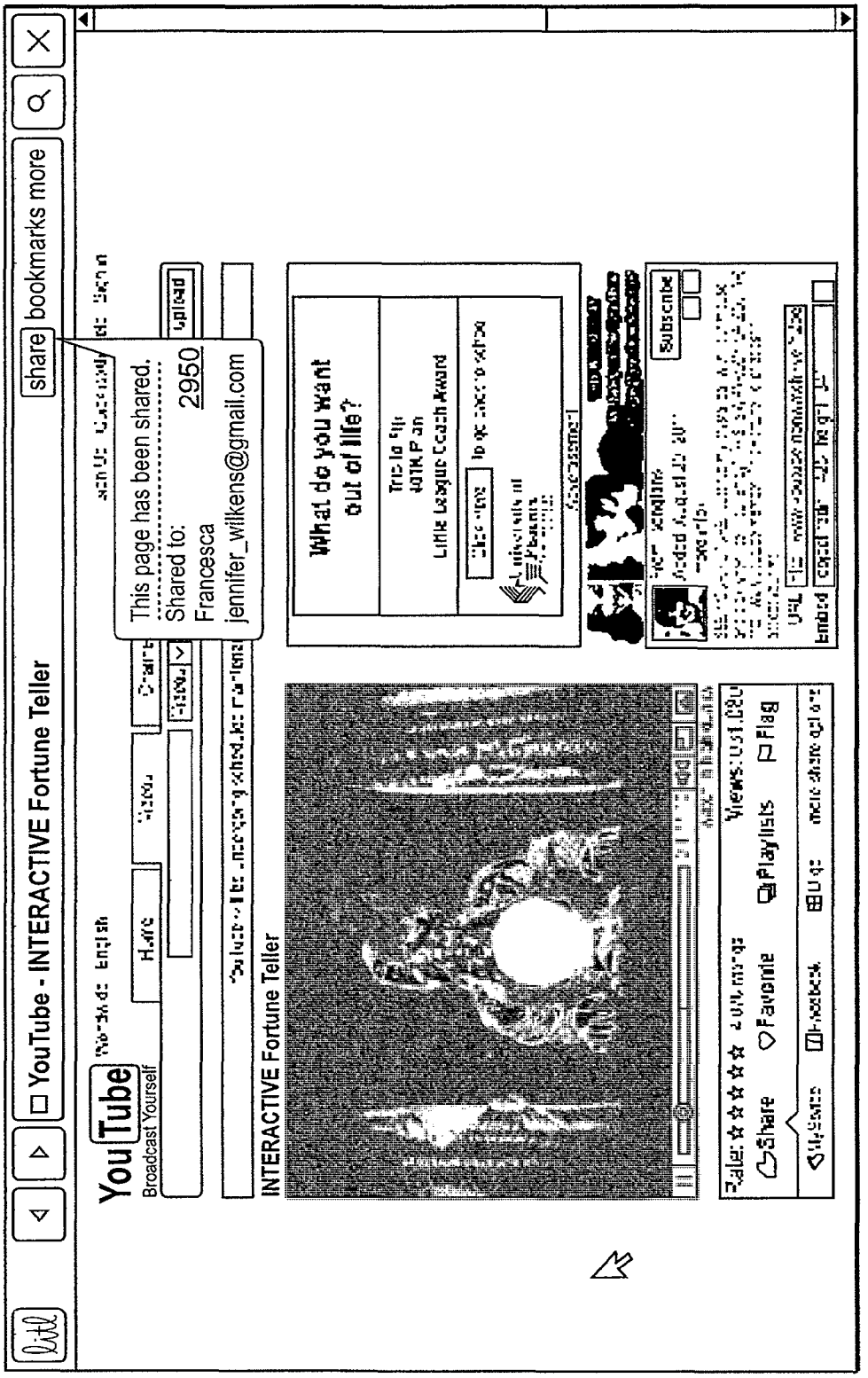
YouTube - INTERACTIVE Fortune Teller
share
bookmarks
more
YouTube
Broadcast Yourself
Home
This page has been shared.
Shared to:
2950
Francesca
jennifer_wilkens@gmail.com
INTERACTIVE Fortune Teller
What do you want out of life?
Subscribe
Share
Favorite
Playlists
Flag

FIG. 29B

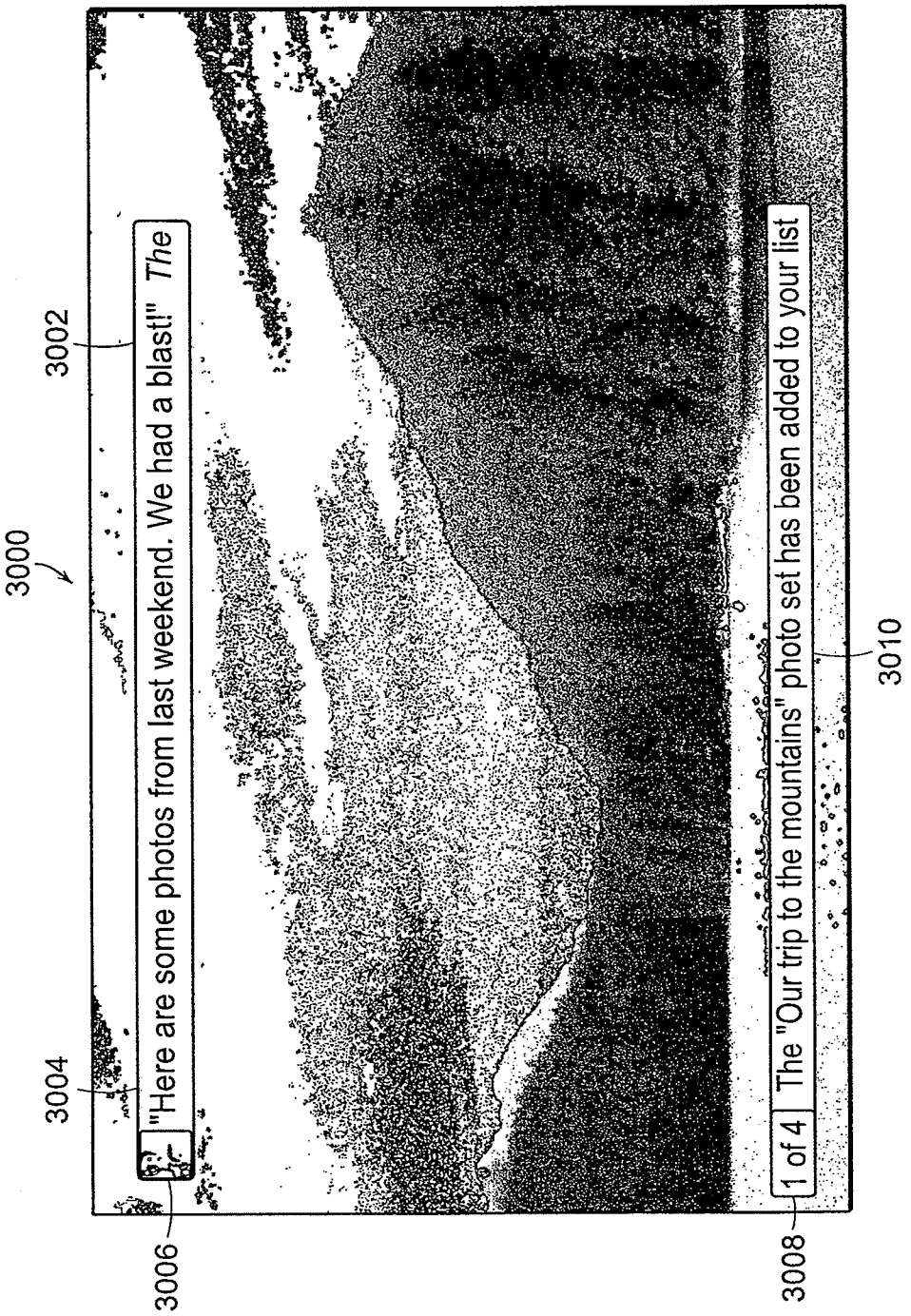
3000
3002
3004
3006
3008
3010
"Here are some photos from last weekend. We had a blast!" The
1 of 4 The "Our trip to the mountains" photo set has been added to your list

FIG. 30

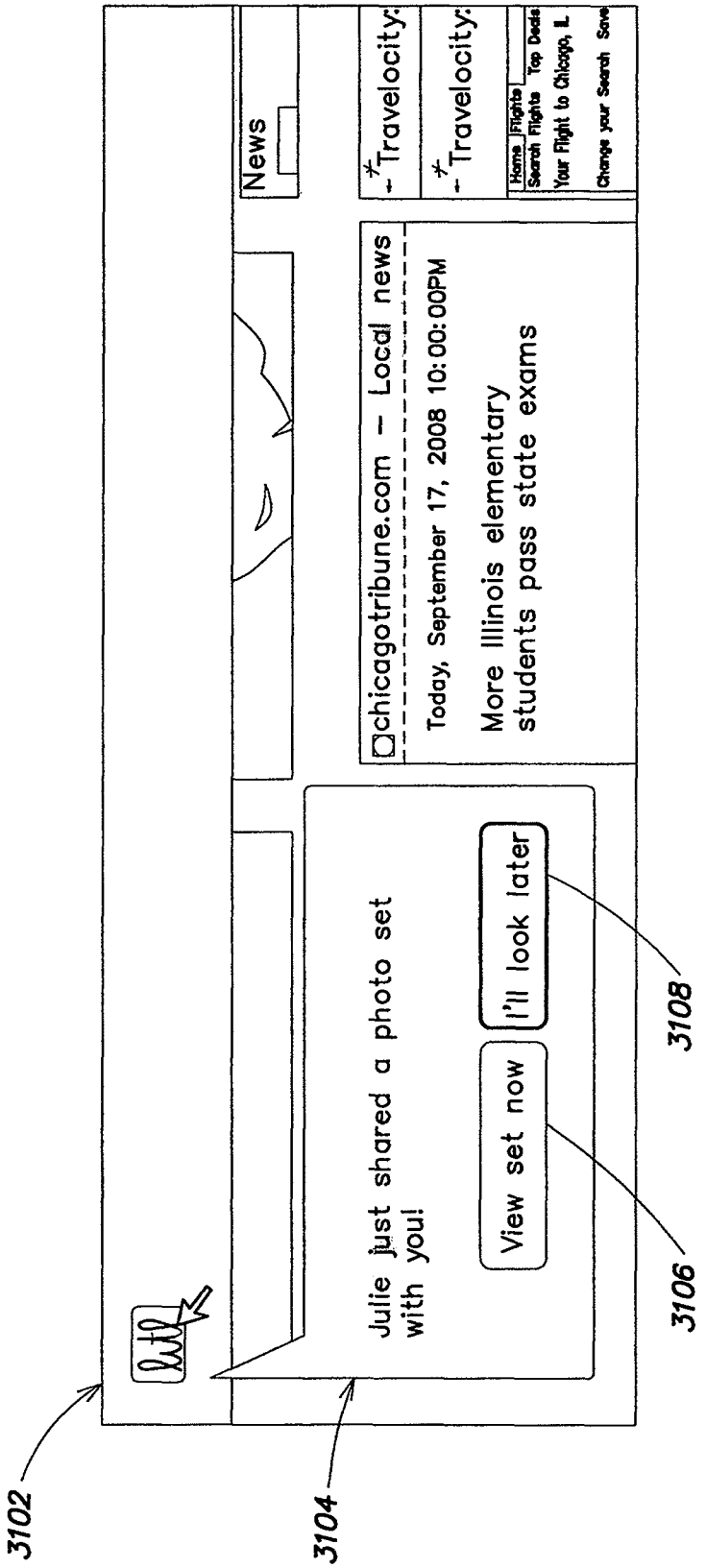
News
Travelocity:
Travelocity:
Home
Flights
Search Flights
Top Deals
Your Flight to Chicago, IL
Change your Search
Save
chicagotribune.com – Local news
Today, September 17, 2008 10:00:00PM
More Illinois elementary students pass state exams
Julie just shared a photo set with you!
View set now
I'll look later
3102
3104
3106
3108

FIG. 31

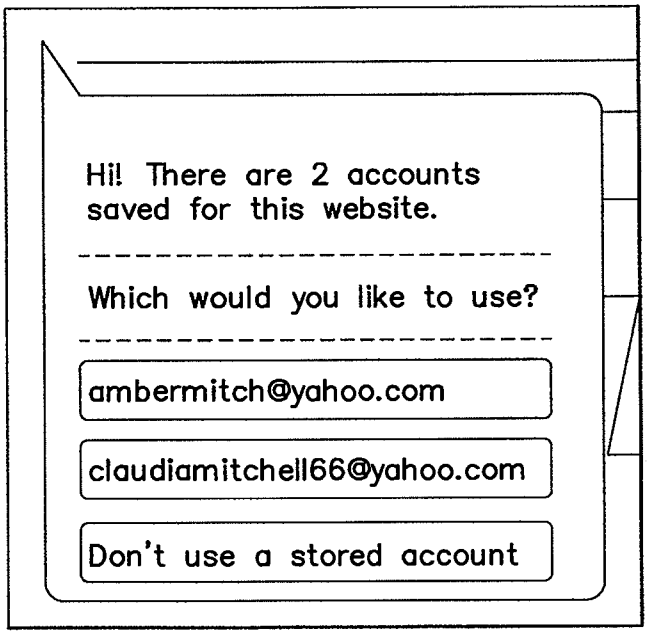
Hi! There are 2 accounts saved for this website.
Which would you like to use?
ambermitch@yahoo.com
claudiamitchell66@yahoo.com
Don't use a stored account

FIG. 32

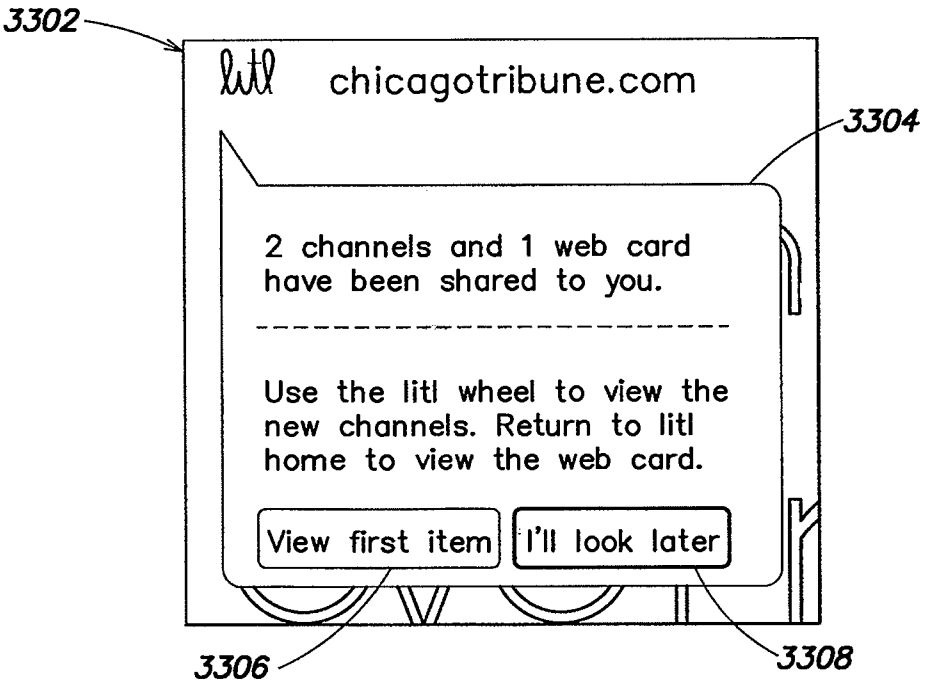
3302
litl
chicagotribune.com
3304
2 channels and 1 web card have been shared to you.
Use the litl wheel to view the new channels. Return to litl home to view the web card.
View first item
I'll look later
3306
3308

FIG. 33

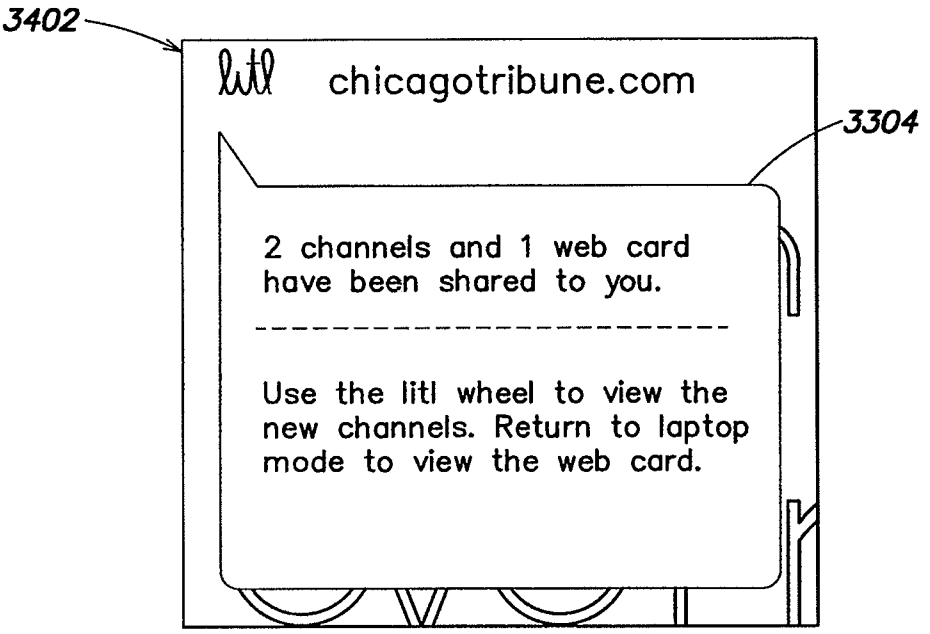
3402
litl
chicagotribune.com
3304
2 channels and 1 web card have been shared to you.
Use the litl wheel to view the new channels. Return to laptop mode to view the web card.

FIG. 34

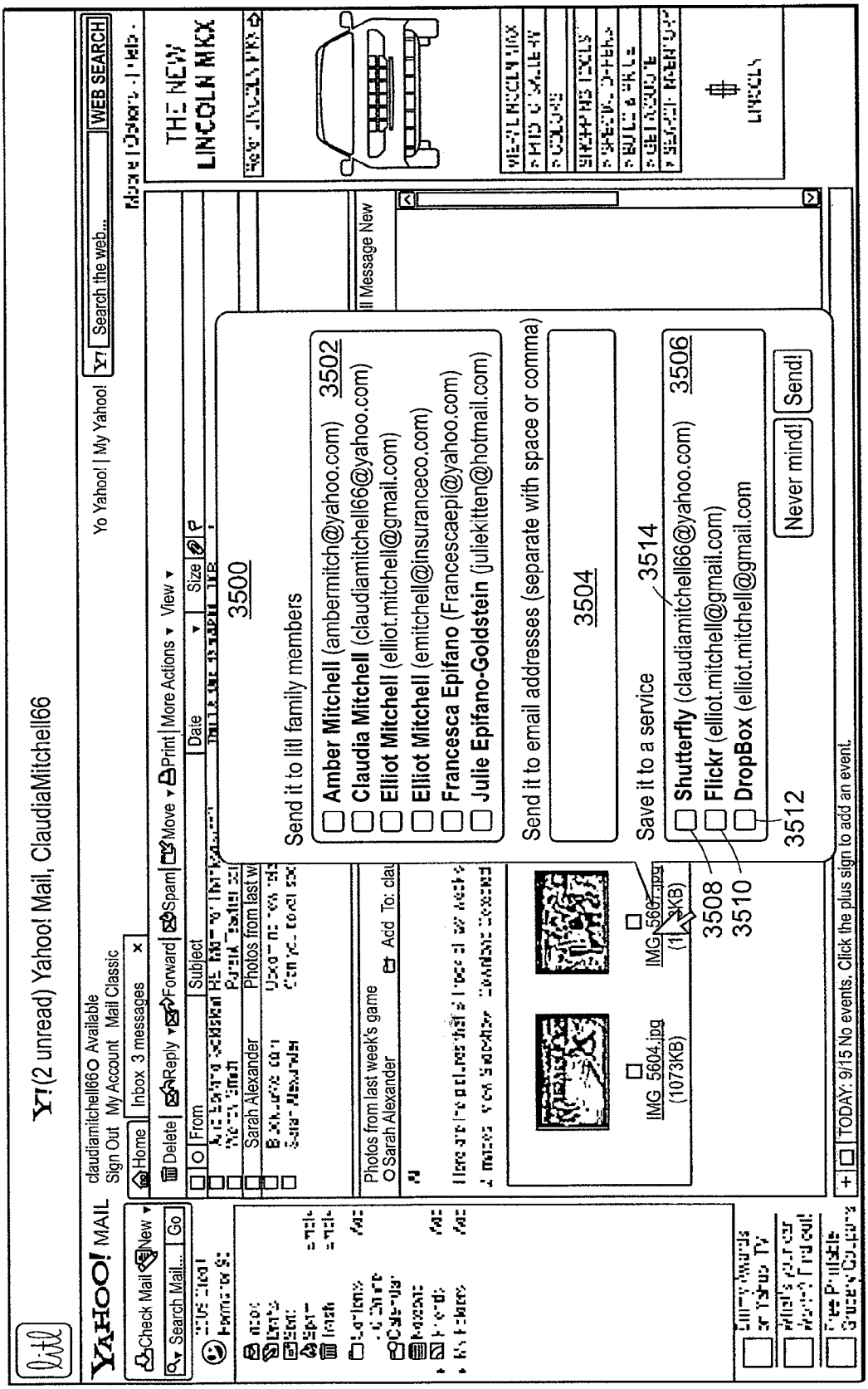
Y! (2 unread) Yahoo! Mail, ClaudiaMitchell66
YAHOO! MAIL
claudiamitchell66 Available
Sign Out My Account Mail Classic
Yo Yahoo! | My Yahoo!
Search the web...
WEB SEARCH
Check Mail
New
Search Mail...
Go
Home
Inbox 3 messages
Delete
Reply
Forward
Spam
Move
Print
More Actions
View
From
Subject
Date
Size
Sarah Alexander
Photos from last w
Photos from last week's game
Sarah Alexander
Add To: clau
THE NEW LINCOLN MKX
Send it to lil family members
Amber Mitchell (ambermitch@yahoo.com)
Claudia Mitchell (claudiamitchell66@yahoo.com)
Elliot Mitchell (elliot.mitchell@gmail.com)
Elliot Mitchell (emitchell@insuranceco.com)
Francesca Epifano (Francescaepi@yahoo.com)
Julie Epifano-Goldstein (juliekitten@hotmail.com)
Send it to email addresses (separate with space or comma)
Save it to a service
Shutterfly (claudiamitchell66@yahoo.com)
Flickr (elliot.mitchell@gmail.com)
DropBox (elliot.mitchell@gmail.com
Never mind!
Send!
IMG_5604.jpg
(1073KB)
IMG_5607.jpg
TODAY: 9/15 No events. Click the plus sign to add an event.
3500
3502
3504
3506
3508
3510
3512
3514

FIG. 35

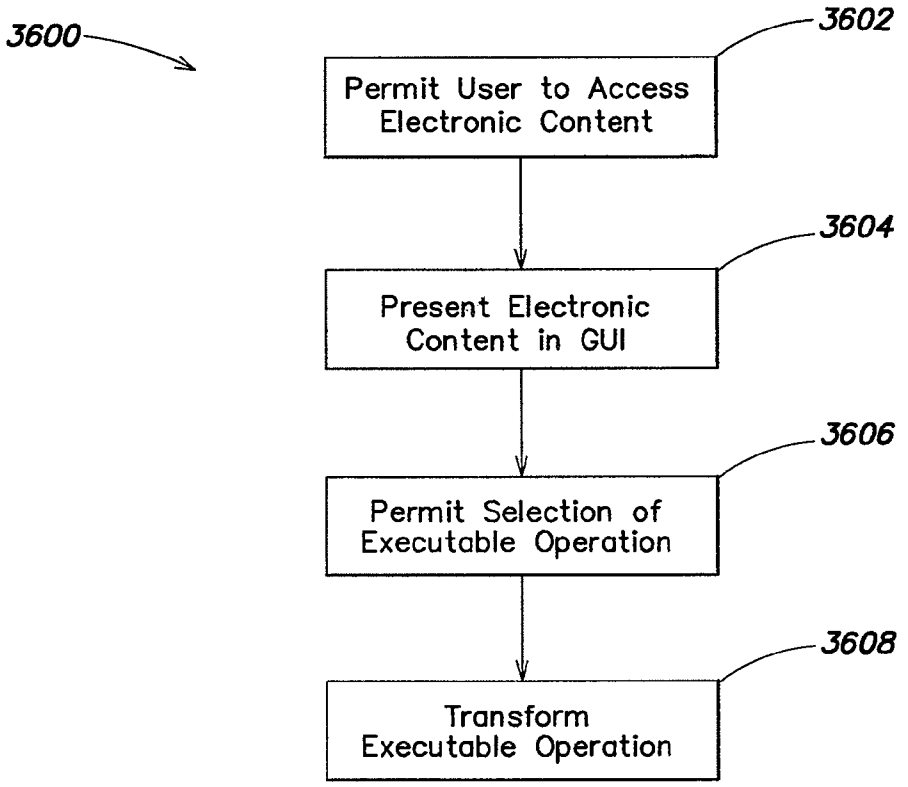
3600
3602
Permit User to Access Electronic Content
3604
Present Electronic Content in GUI
3606
Permit Selection of Executable Operation
3608
Transform Executable Operation

FIG. 36

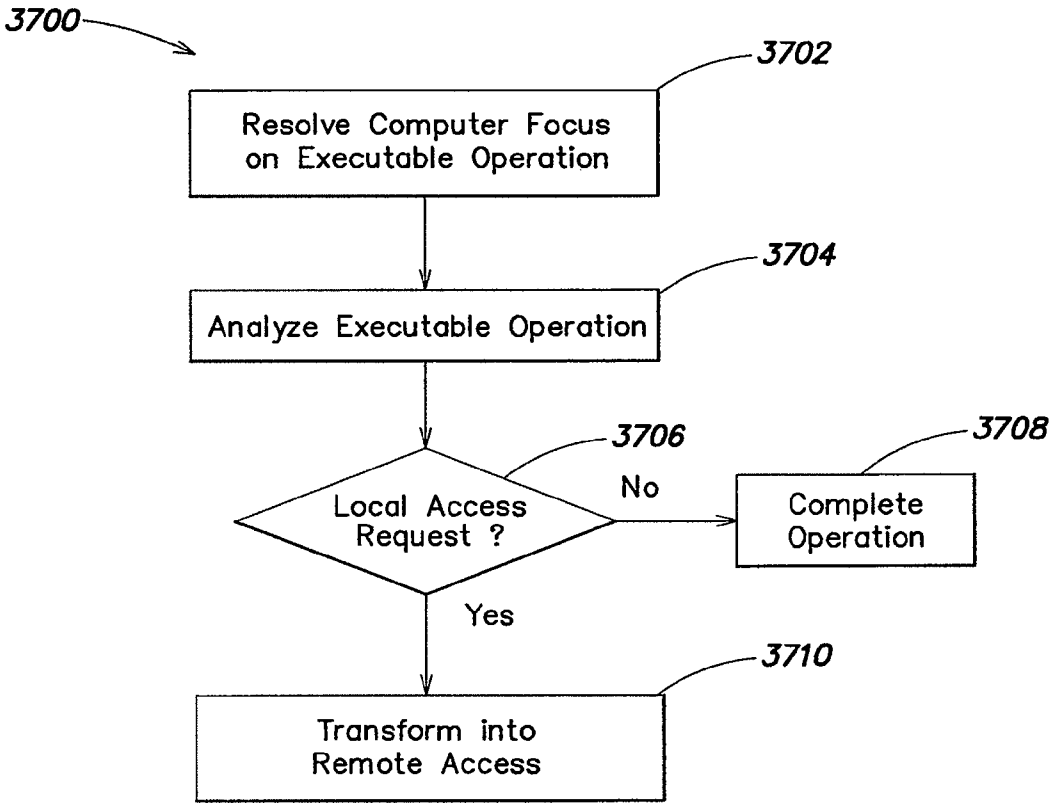
3700
3702
Resolve Computer Focus on Executable Operation
3704
Analyze Executable Operation
3706
Local Access Request ?
No
3708
Complete Operation
Yes
3710
Transform into Remote Access

FIG. 37

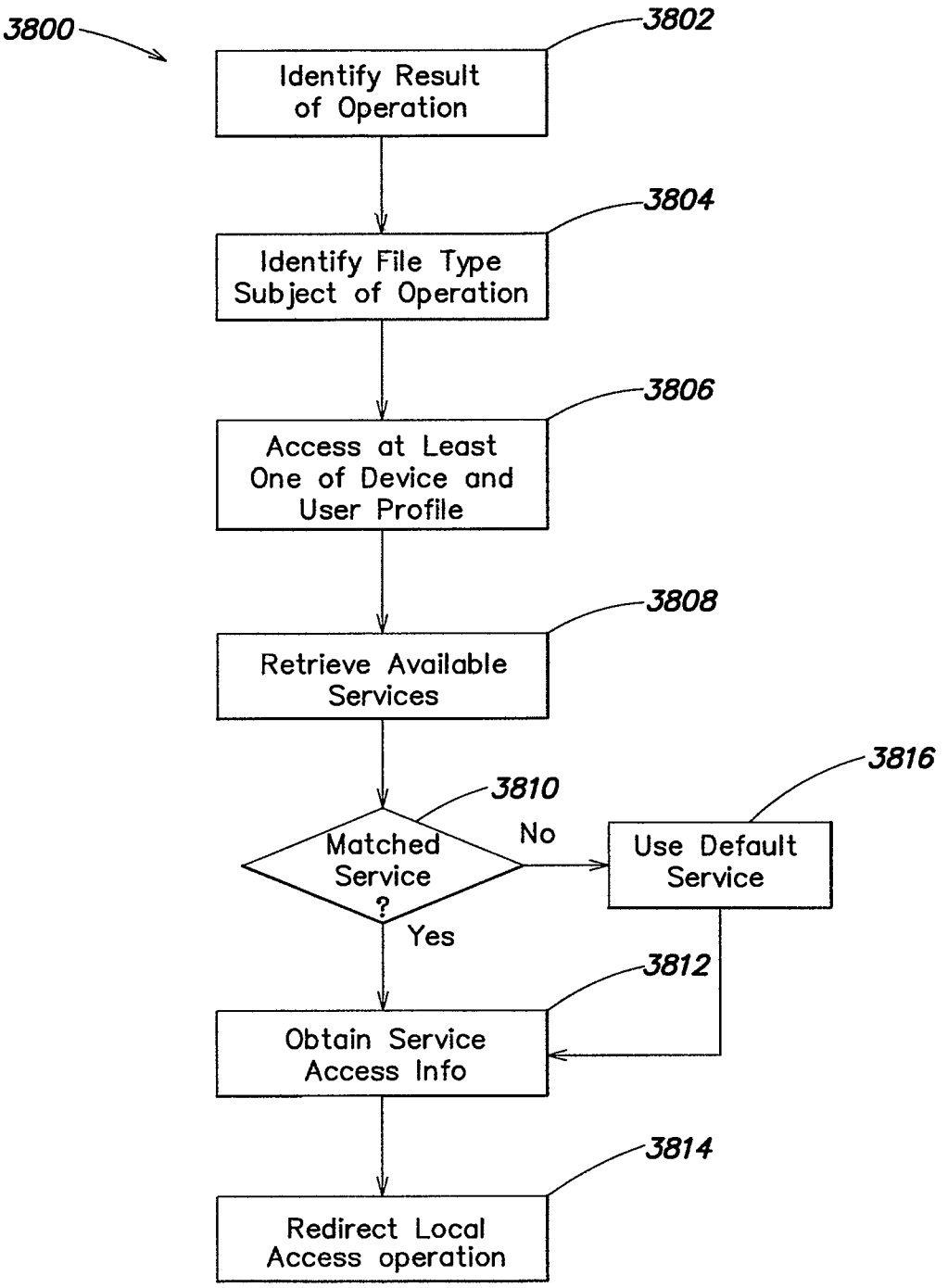
3800
3802
Identify Result of Operation
3804
Identify File Type Subject of Operation
3806
Access at Least One of Device and User Profile
3808
Retrieve Available Services
3810
Matched Service ?
No
Yes
3816
Use Default Service
3812
Obtain Service Access Info
3814
Redirect Local Access operation

FIG. 38

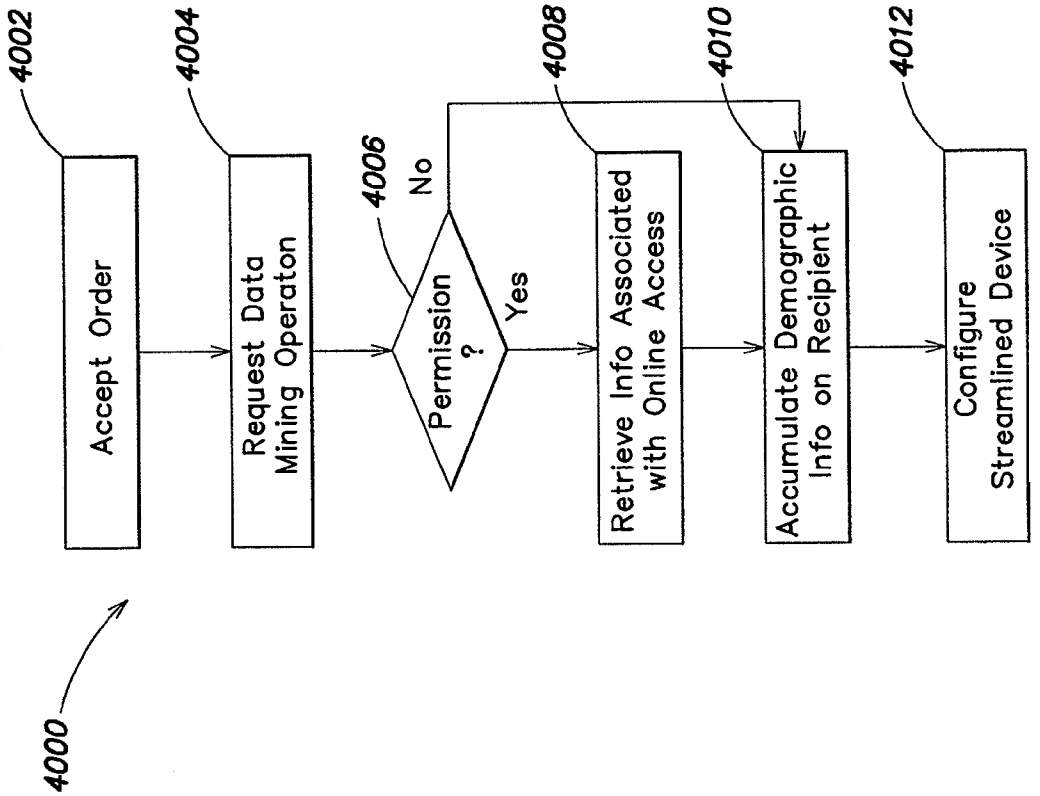
4000
4002
Accept Order
4004
Request Data Mining Operaton
4006
Permission ?
No
Yes
4008
Retrieve Info Associated with Online Access
4010
Accumulate Demographic Info on Recipient
4012
Configure Streamlined Device

FIG. 40

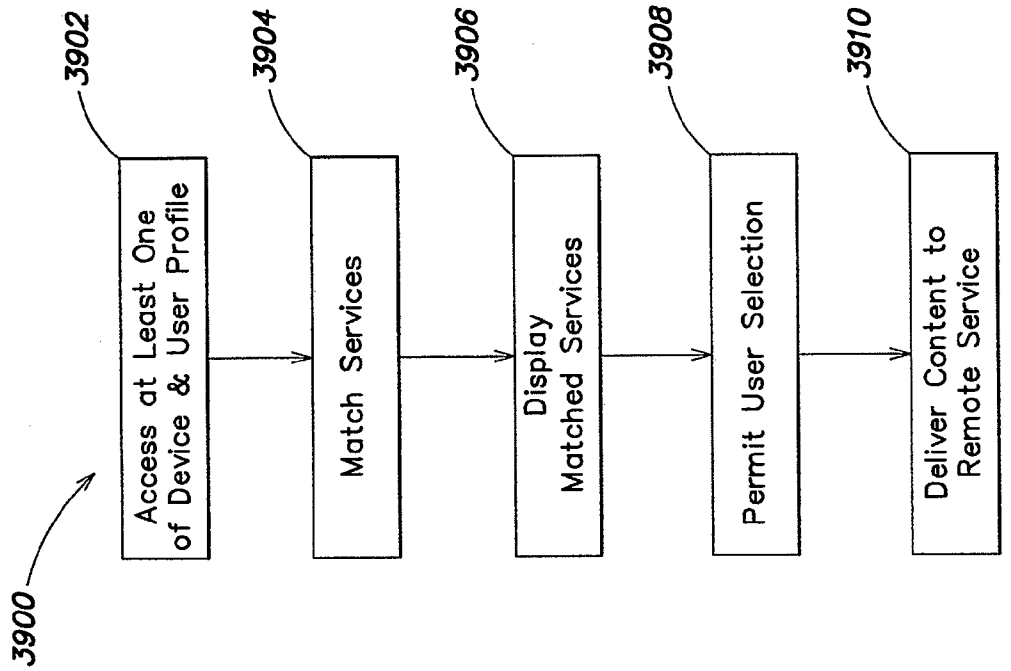
3900
3902
Access at Least One of Device & User Profile
3904
Match Services
3906
Display Matched Services
3908
Permit User Selection
3910
Deliver Content to Remote Service

FIG. 39

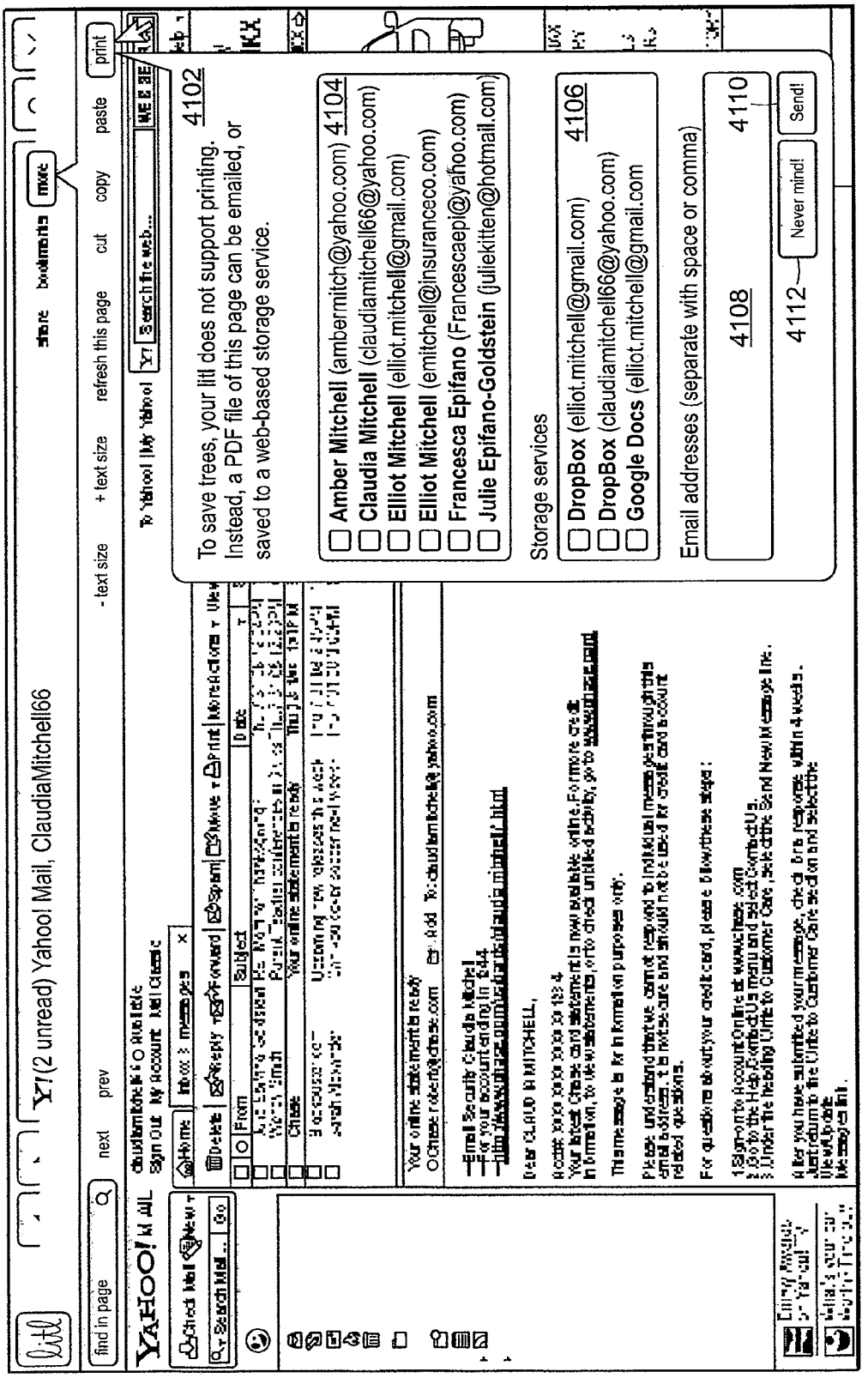
To save trees, your list does not support printing.
Instead, a PDF file of this page can be emailed, or saved to a web-based storage service.
4102
Amber Mitchell (ambermitch@yahoo.com) 4104
Claudia Mitchell (claudiamitchell66@yahoo.com)
Elliot Mitchell (elliot.mitchell@gmail.com)
Elliot Mitchell (emitchell@insuranceco.com)
Francesca Epifano (Francescaepi@yahoo.com)
Julie Epifano-Goldstein (juliekitten@hotmail.com)
Storage services
DropBox (elliot.mitchell@gmail.com) 4106
DropBox (claudiamitchell66@yahoo.com)
Google Docs (elliot.mitchell@gmail.com
Email addresses (separate with space or comma)
4108
4110
4112
Never mind!
Send!

FIG. 41A

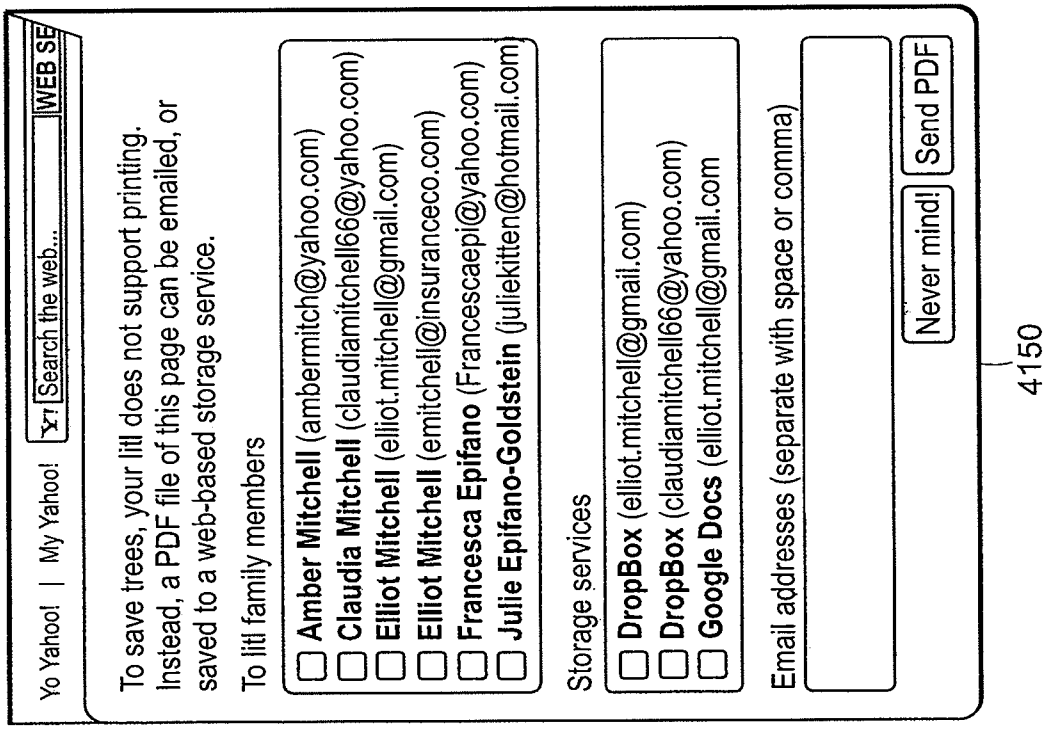
Yo Yahoo! | My Yahoo!
Search the web...
WEB SE
To save trees, your litl does not support printing. Instead, a PDF file of this page can be emailed, or saved to a web-based storage service.
To litl family members
Amber Mitchell (ambermitch@yahoo.com)
Claudia Mitchell (claudiamitchell66@yahoo.com)
Elliot Mitchell (elliot.mitchell@gmail.com)
Elliot Mitchell (emitchell@insuranceco.com)
Francesca Epifano (Francescaepi@yahoo.com)
Julie Epifano-Goldstein (juliekitten@hotmail.com)
Storage services
DropBox (elliot.mitchell@gmail.com)
DropBox (claudiamitchell66@yahoo.com)
Google Docs (elliot.mitchell@gmail.com
Email addresses (separate with space or comma)
Never mind!
Send PDF
4150

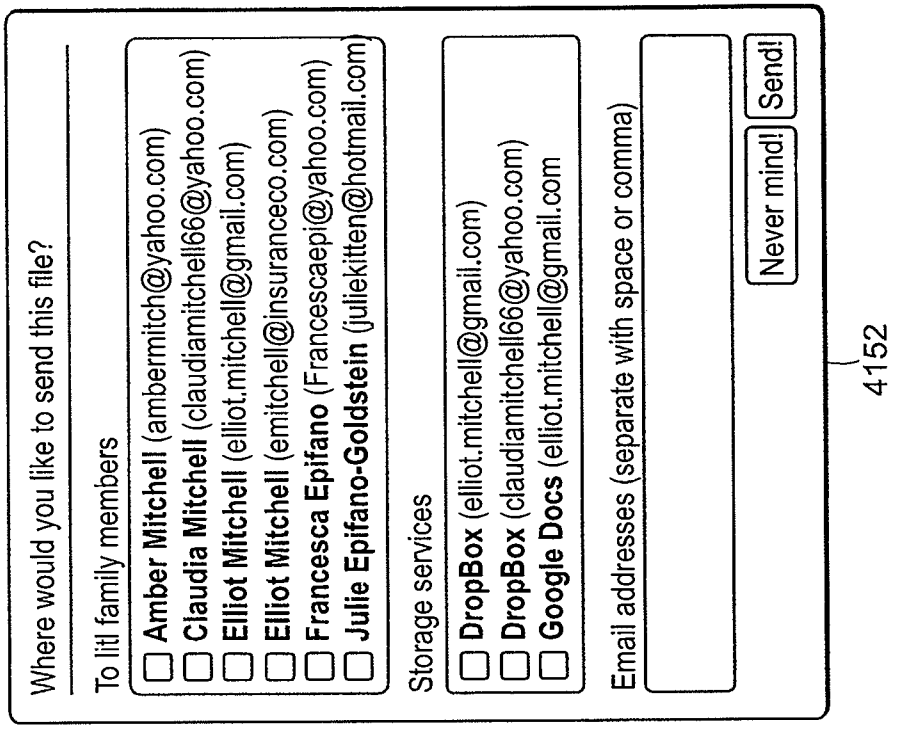
Where would you like to send this file?
To litl family members
Amber Mitchell (ambermitch@yahoo.com)
Claudia Mitchell (claudiamitchell66@yahoo.com)
Elliot Mitchell (elliot.mitchell@gmail.com)
Elliot Mitchell (emitchell@insuranceco.com)
Francesca Epifano (Francescaepi@yahoo.com)
Julie Epifano-Goldstein (juliekitten@hotmail.com)
Storage services
DropBox (elliot.mitchell@gmail.com)
DropBox (claudiamitchell66@yahoo.com)
Google Docs (elliot.mitchell@gmail.com
Email addresses (separate with space or comma)
Never mind!
Send!
4152

FIG. 41B

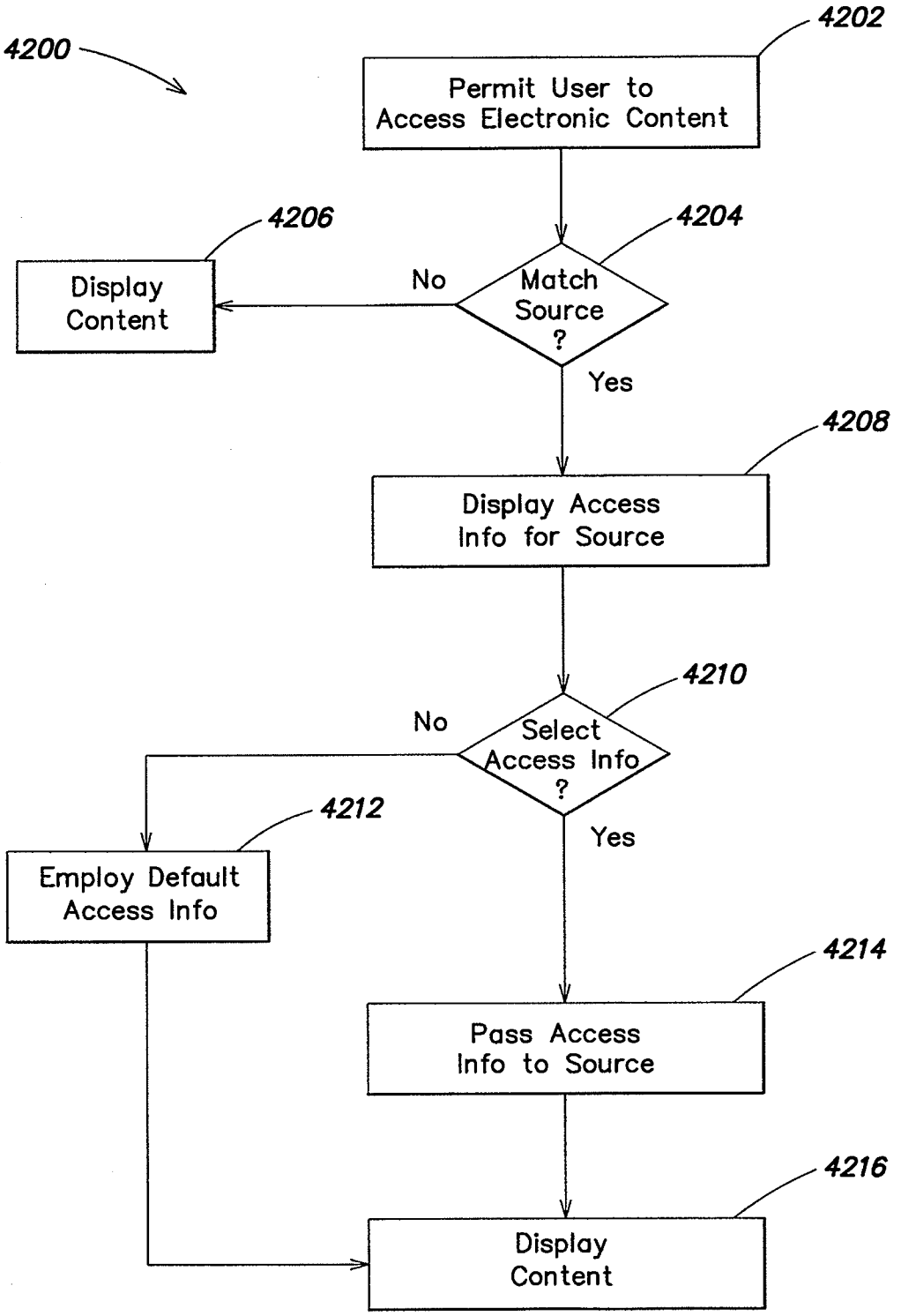
4200
4202
Permit User to Access Electronic Content
4204
Match Source ?
No
4206
Display Content
Yes
4208
Display Access Info for Source
4210
Select Access Info ?
No
4212
Employ Default Access Info
Yes
4214
Pass Access Info to Source
4216
Display Content

FIG. 42

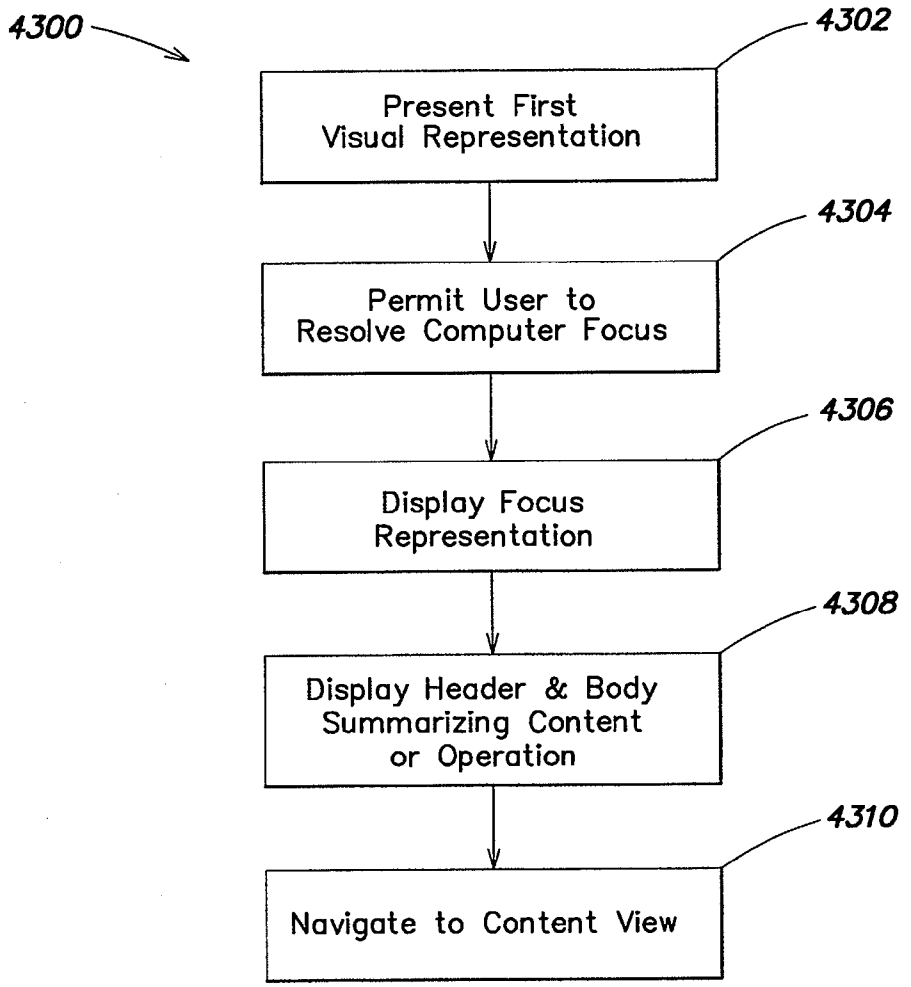
4300
4302
Present First Visual Representation
4304
Permit User to Resolve Computer Focus
4306
Display Focus Representation
4308
Display Header & Body Summarizing Content or Operation
4310
Navigate to Content View

FIG. 43

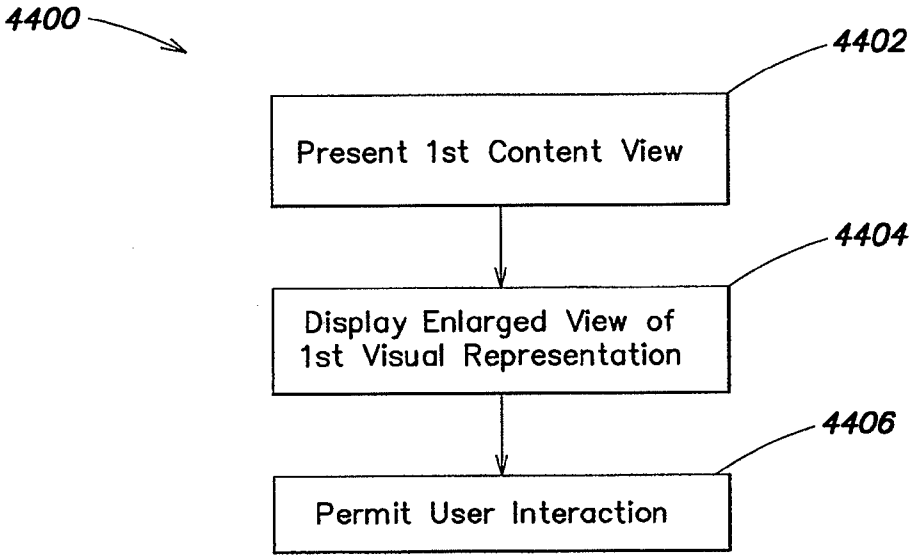
4400
4402
Present 1st Content View
4404
Display Enlarged View of 1st Visual Representation
4406
Permit User Interaction

FIG. 44

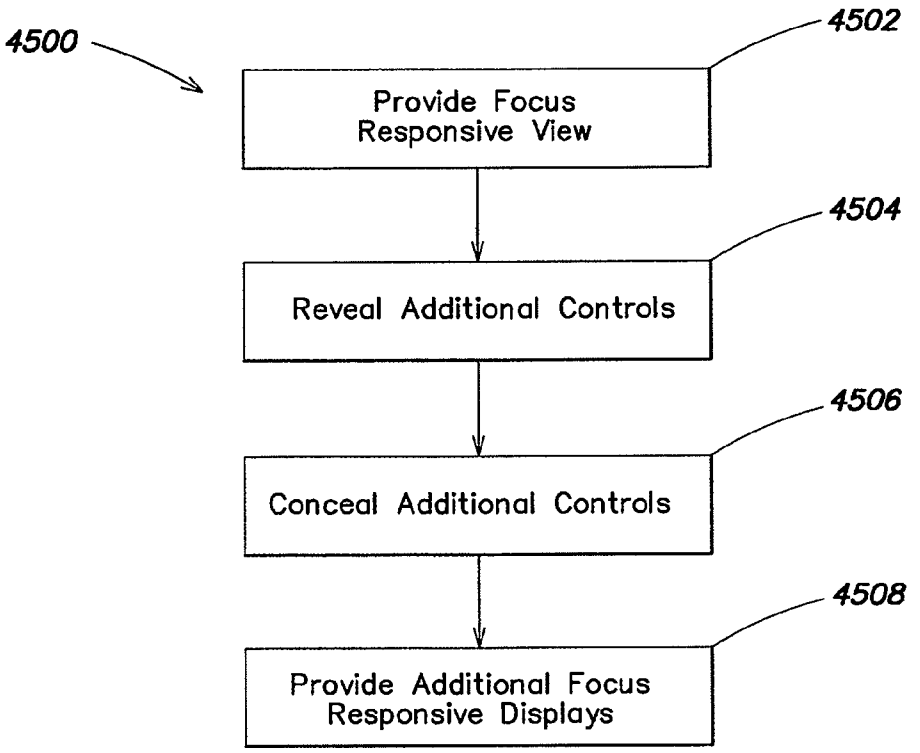
4500
4502
Provide Focus Responsive View
4504
Reveal Additional Controls
4506
Conceal Additional Controls
4508
Provide Additional Focus Responsive Displays

FIG. 45

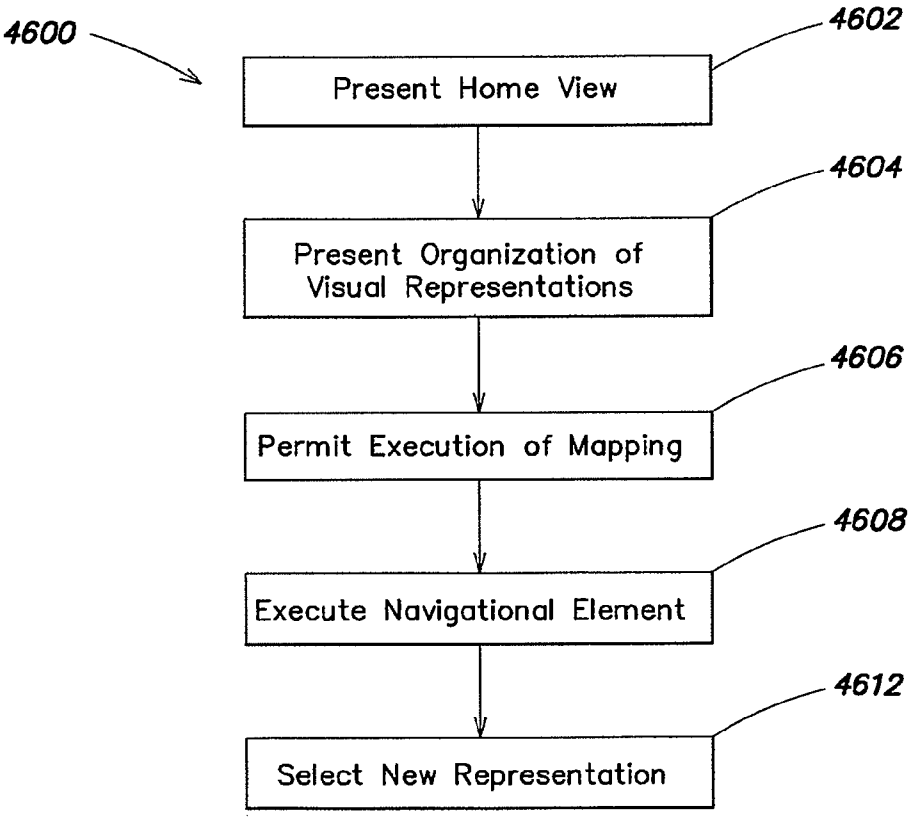
4600
4602
Present Home View
4604
Present Organization of Visual Representations
4606
Permit Execution of Mapping
4608
Execute Navigational Element
4612
Select New Representation

FIG. 46

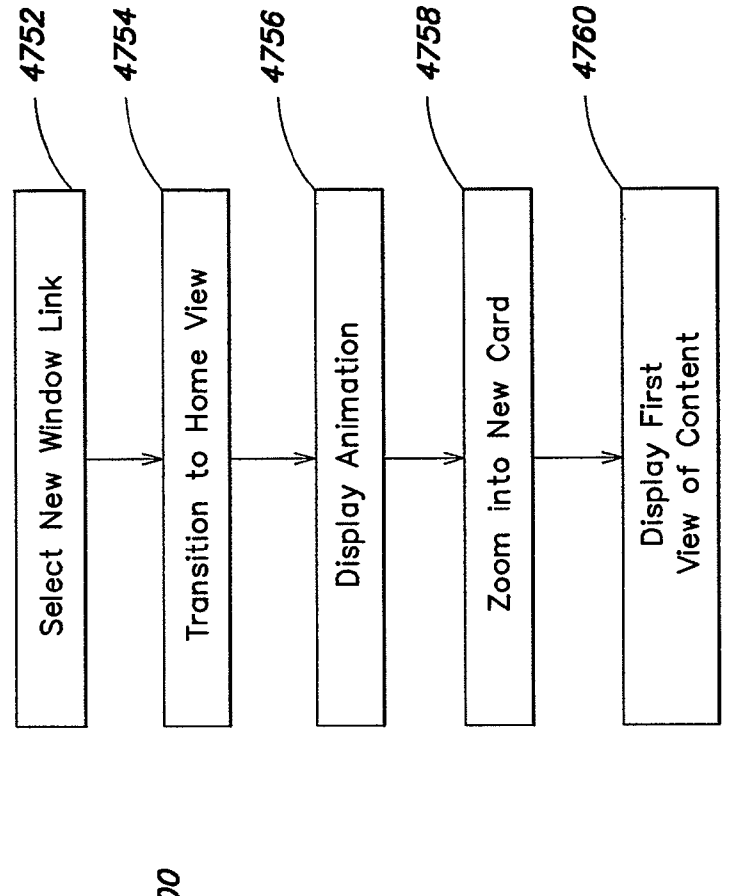

FIG. 47B

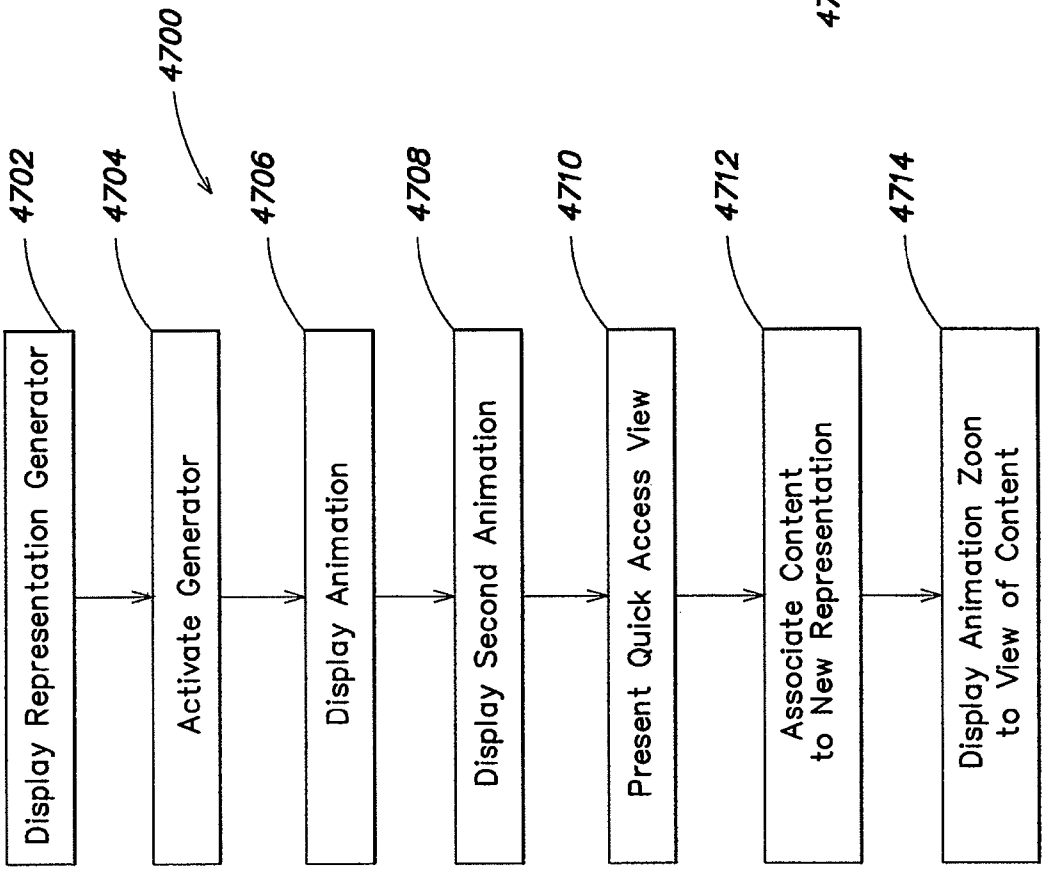

FIG. 47A

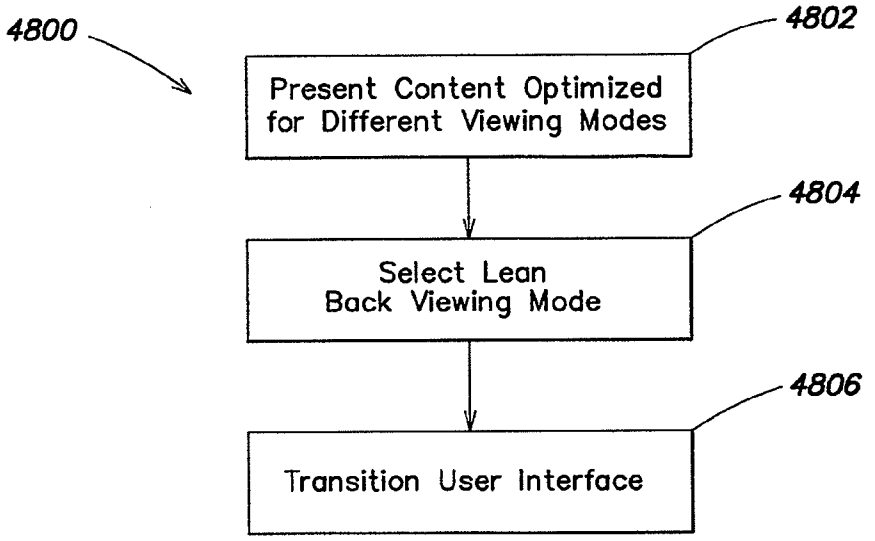

FIG. 48

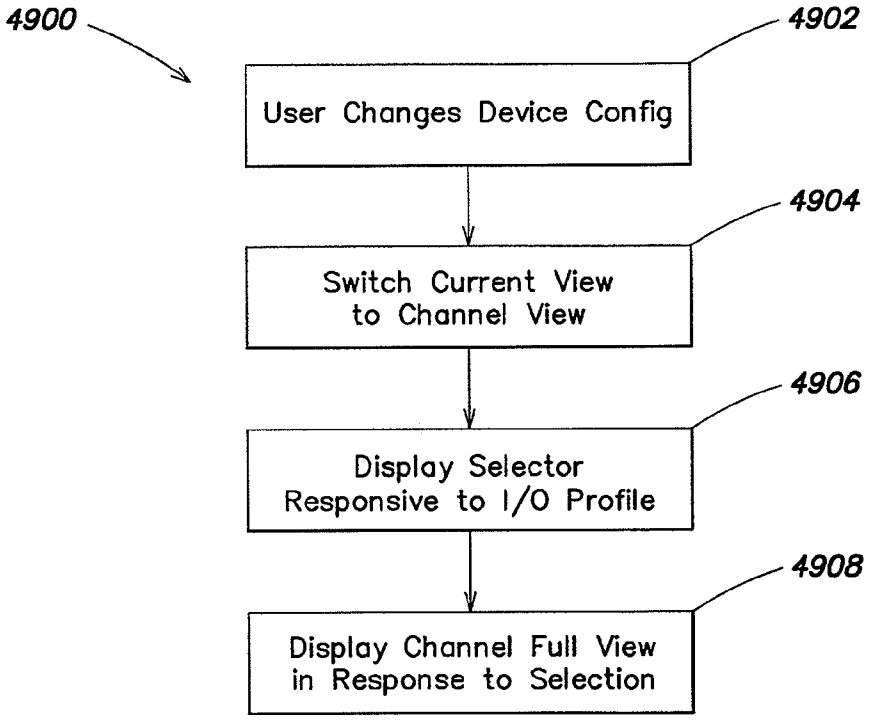

FIG. 49A

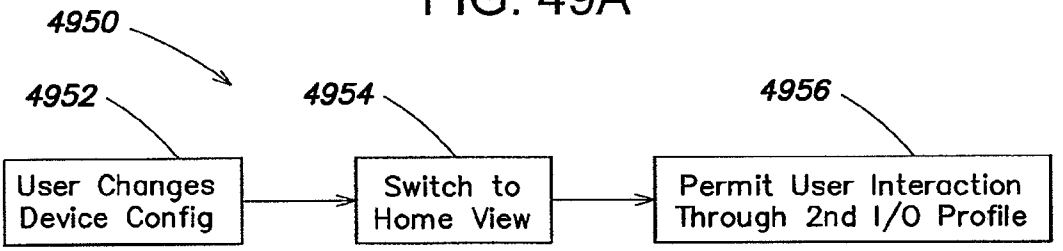

FIG. 49B

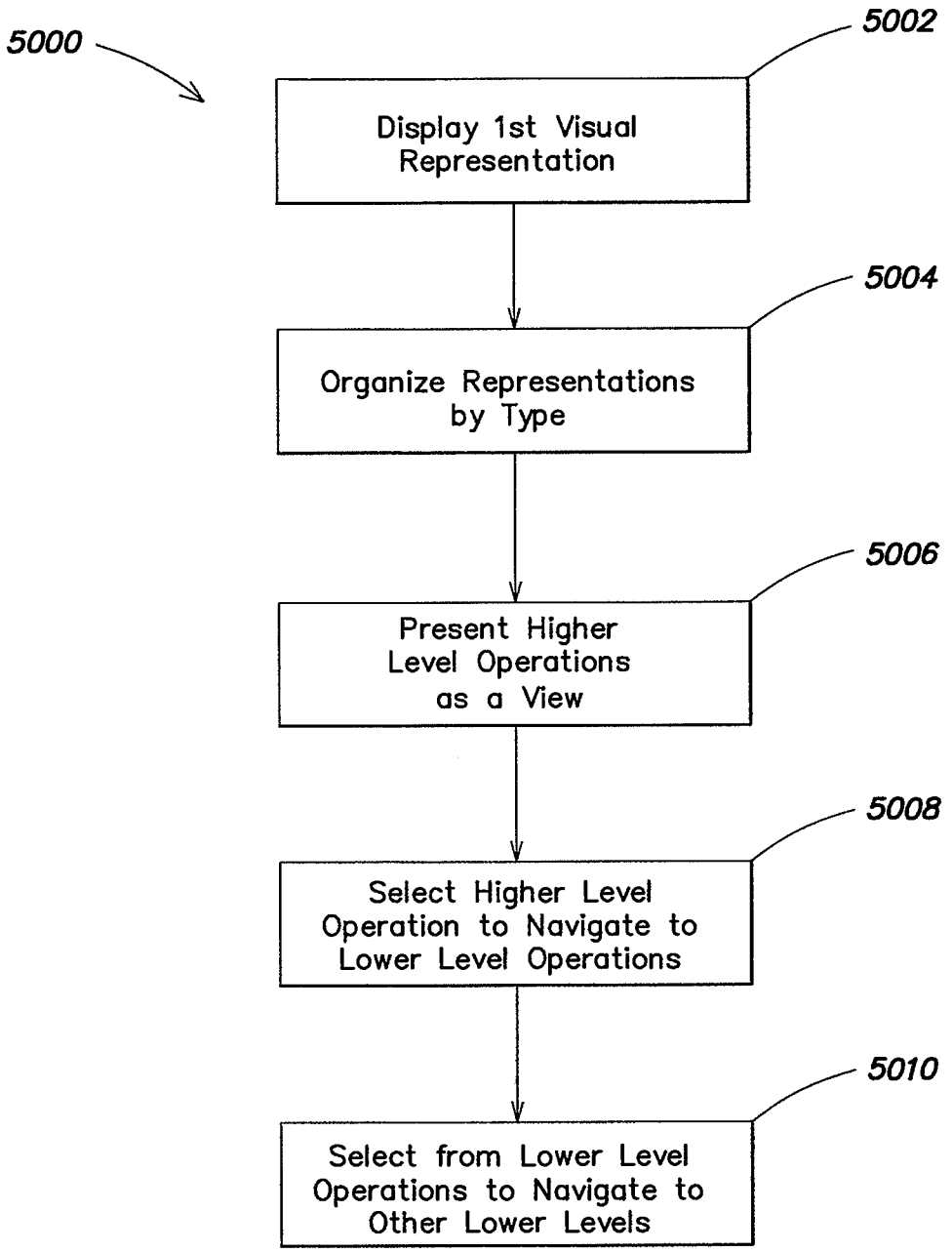
5000
5002
Display 1st Visual Representation
5004
Organize Representations by Type
5006
Present Higher Level Operations as a View
5008
Select Higher Level Operation to Navigate to Lower Level Operations
5010
Select from Lower Level Operations to Navigate to Other Lower Levels

FIG. 50

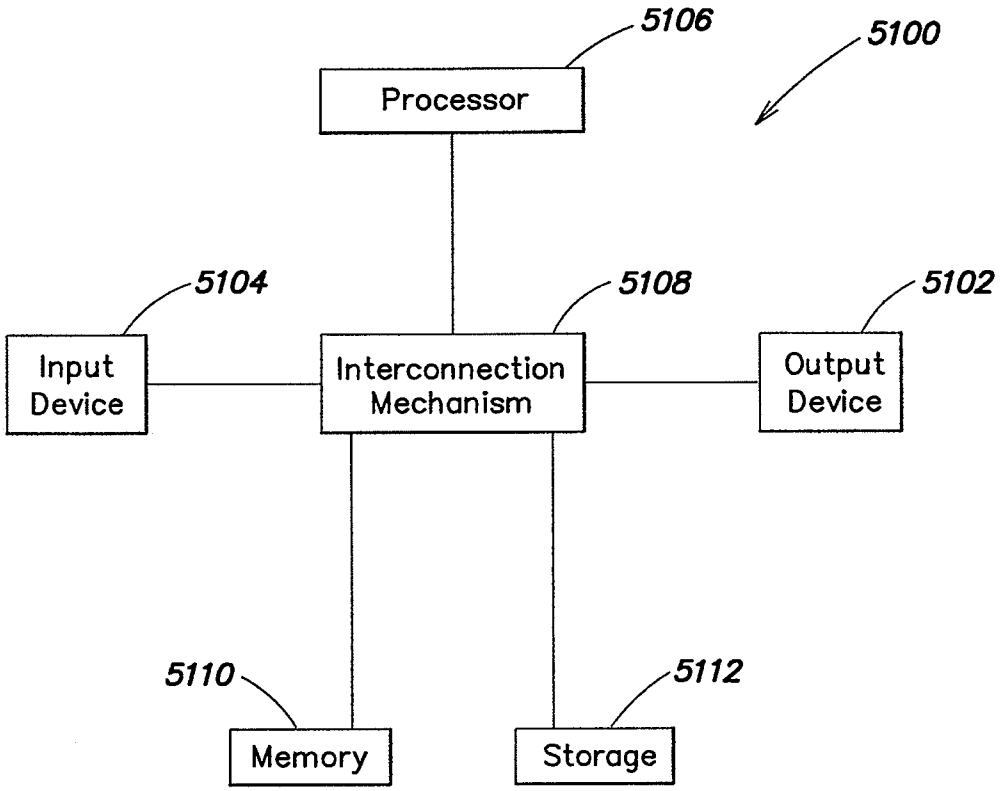
5106
5100
Processor
5104
5108
5102
Input Device
Interconnection Mechanism
Output Device
5110
5112
Memory
Storage

FIG. 51

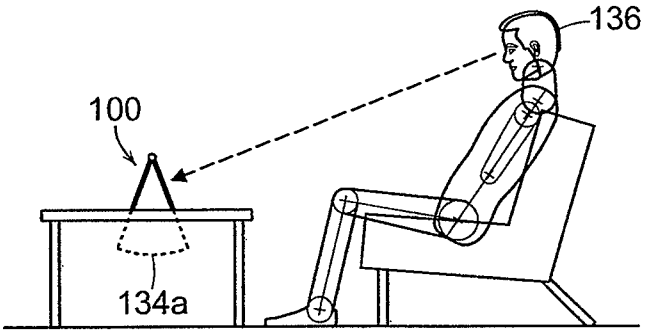

FIG. 52A

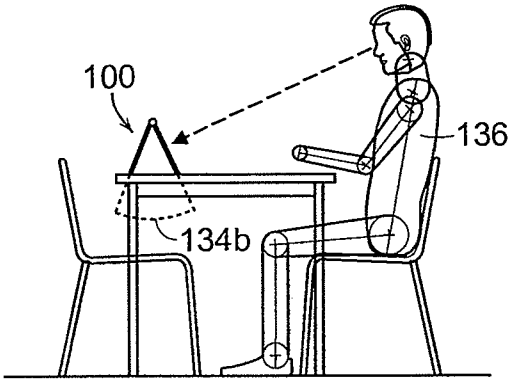

FIG. 52B

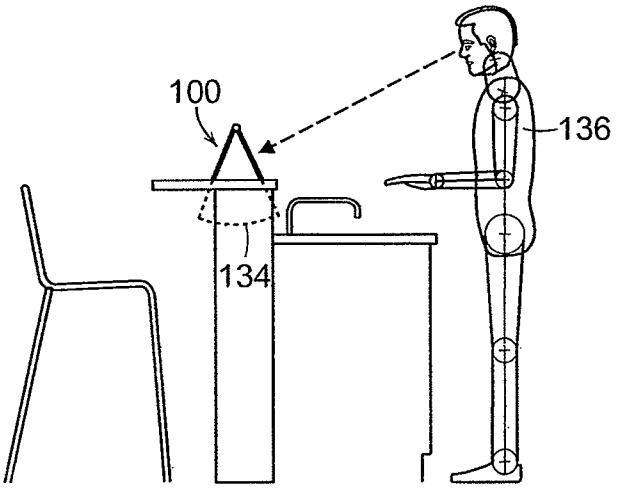

FIG. 52C

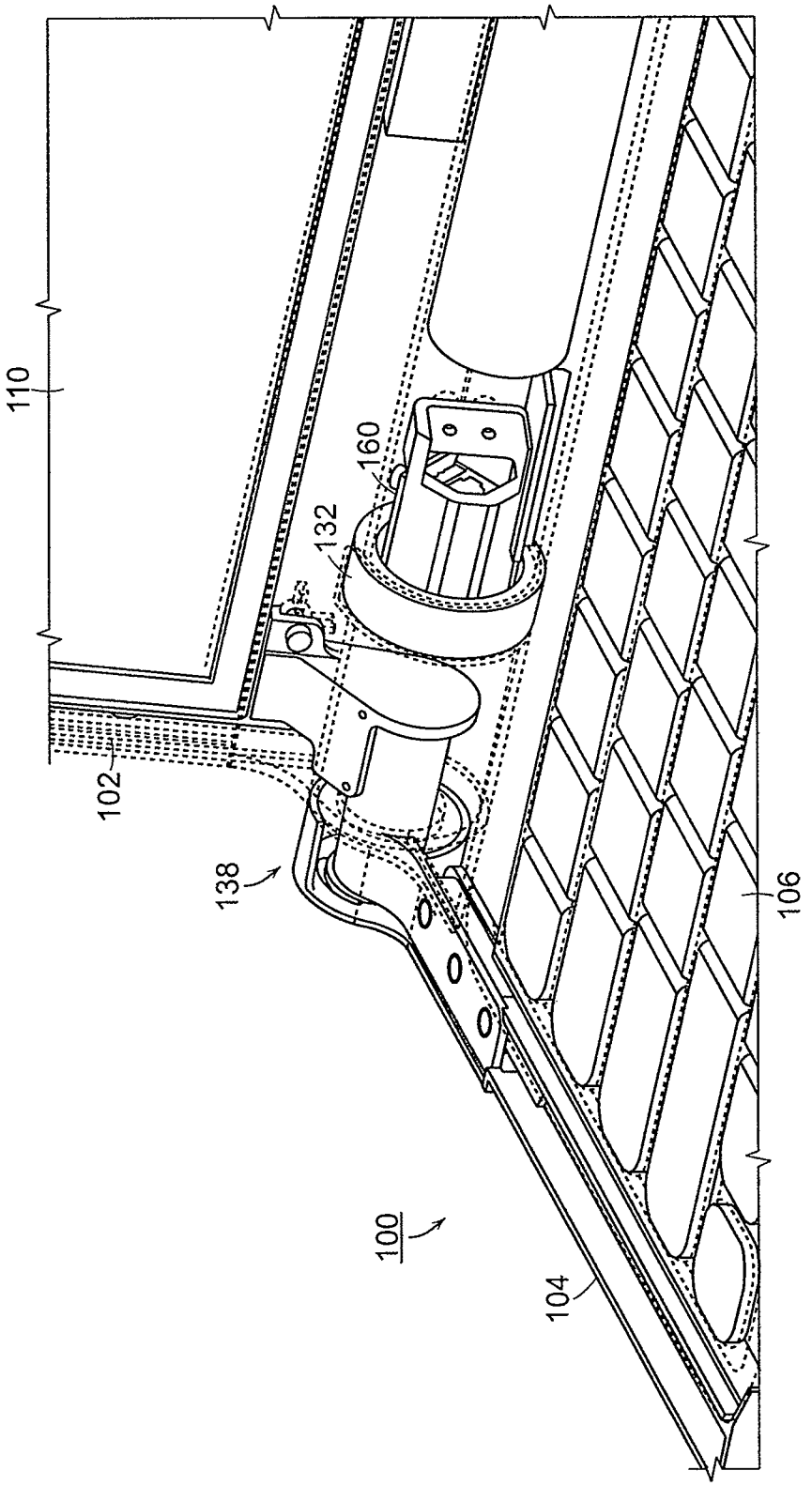

FIG. 53A

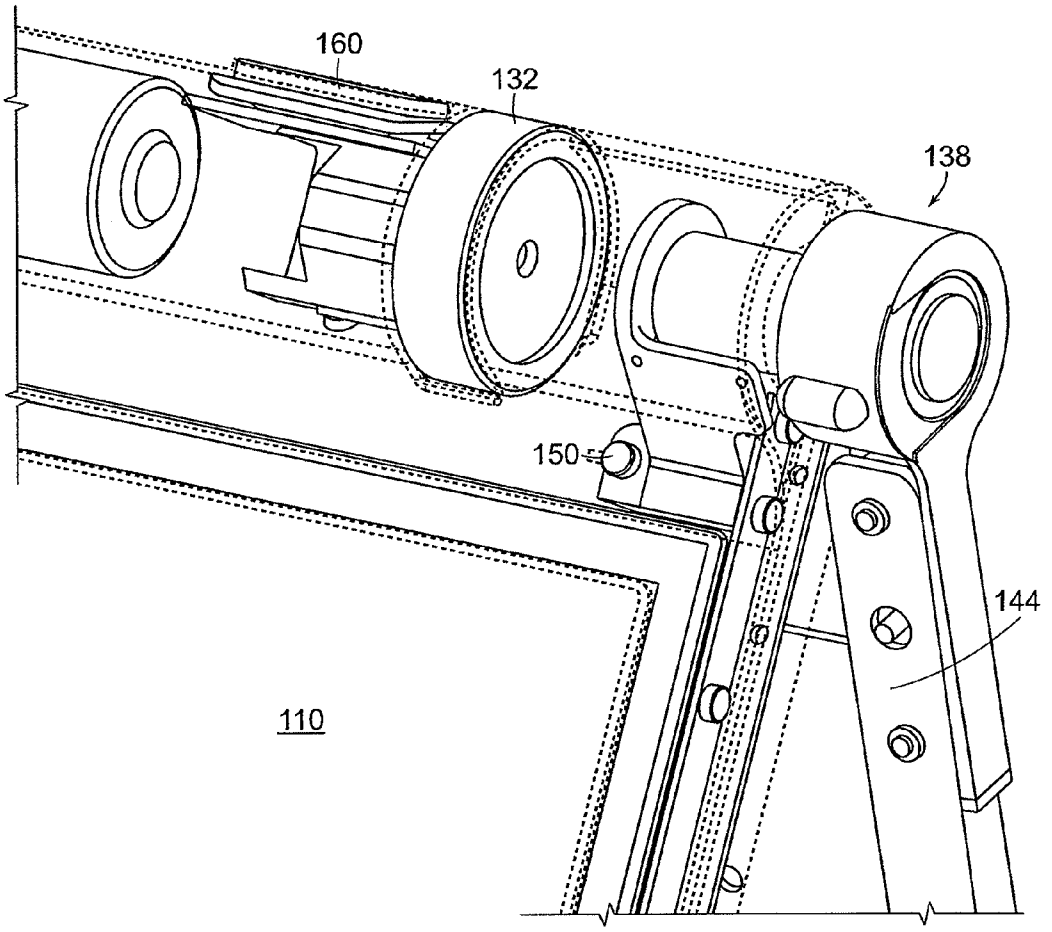

FIG. 53B

SYSTEM AND METHOD FOR STREAMLINING USER INTERACTION WITH ELECTRONIC CONTENT

RELATED APPLICATIONS

This application is a continuation-in-part of, and claims priority under 35 U.S.C. §120 to, U.S. patent application Ser. No. 12/170,951 entitled "PORTABLE COMPUTER WITH MULTIPLE DISPLAY CONFIGURATIONS," filed on Jul. 10, 2008; which claims priority under 35 U.S.C. §119(e) to U.S. Provisional Application Ser. No. 61/041,365, entitled "PORTABLE COMPUTER WITH MULTIPLE DISPLAY CONFIGURATIONS," filed Apr. 1, 2008, both of which are herein incorporated by reference in their entirety. Furthermore, this application is a continuation-in-part of, and claims priority under 35 U.S.C. §120 to U.S. patent application Ser. No. 12/170,939, entitled "PORTABLE COMPUTER WITH MULTIPLE DISPLAY CONFIGURATIONS," filed on Jul. 10, 2008; which claims priority under 35 U.S.C. 119(e) to U.S. Provisional Application Ser. No. 61/041,365, entitled "PORTABLE COMPUTER WITH MULTIPLE DISPLAY CONFIGURATIONS," filed Apr. 1, 2008, each of which applications are herein incorporated by reference in their entirety. This application also claims priority under 35 U.S.C. 119(e) to U.S. Provisional Application Ser. No. 61/041,365, entitled "PORTABLE COMPUTER WITH MULTIPLE DISPLAY CONFIGURATIONS," filed Apr. 1, 2008 which application is incorporated herein by reference in its entirety.

BACKGROUND

Much of the advancement in contemporary computer systems and services stems from the significant increases in computing power. Hand in hand with those increases, enhanced features sets have developed designed to utilize that computing power. Conventional wisdom suggests that the more features that can be provided to a particular computer user, the better the user's experience will be.

As computers have become more powerful and capable of providing more and more features, ordinary/typical computer users has not been able to keep up with availability of features and services. User may become frustrated by the inability to navigate the myriad (sometime unending) configurations and options provided in order to achieve something useful and/or workable to their ordinary use. Many users simply don't take advantage of provided features. Some outright ignore options and features that would simplify the use of their computer system. This may occur because of user ignorance or even fear and in some instances because the user lacks experience with new features—so the user doesn't know the feature can be useful.

User frustration is felt not only with respect to the newer more powerful computer systems being offered today, but also frustration abounds with respect to their computer's interaction with the Internet. The present movement on the Internet, often referred to as Web 2.0, also subscribes to conventional thinking in that more and more features are being packed into each and every aspect of the web experience. Third party service providers can be found for almost any service—virtually no limitations have been found for the services that can be provided.

More typically, these on-line services provide very useful opportunities for the users who know how to take advantage of them—online photo management/sharing, online financial services, online marketplaces, online exchanges, web hosting, web development, dating services, social networking to

name only a few. Very often these on-line services can be found for free or minimal costs. Typically, registration is the only requirement for participating in what is offered as free services. In other words, all that is required is the creation of a user name and password. Each service often attempts to outdo competitors by offering more and more options/features than their competitors.

SUMMARY

It is realized that the conventional wisdom with respect to such "feature packing" as discussed above suffers from significant flaws. Typical computer users simply can't take advantage of all the functionality offered, either the services and features offered by their own computer, or the services and features offered by online providers. The complexity of the interface (both hardware and software) hampers adoption, as does the volume of features offered. For example, third party service provides often find difficulty in subscribing new users, educating existing users, and providing integration of feature sets for the features they provide as well as those offered by other service providers.

Further complicating the user's interaction with computer devices and provided services is the inflexibility of the devices being used and their accompanying interfaces. It is realized that a device that can provide a user with a flexible portal into electronic content, that is, one that can be configured dynamically improves the user experience. For example, permitting transitions from a "lean back" mode of viewing (imagine, for example, a person watching television from their couch) to a "lean forward" mode of viewing (picture, for example, a laptop user typing away in a word processing application) on a computer device improves the user experience. Further, user interfaces that are responsive to the user's dynamic configurations improve the user's ability to interact with the electronic content, from the machine itself, the internet, and even from both sources.

Accordingly, aspects and embodiments are directed to a graphical user interface that organizes interface elements into modes of content for presentation to a user. Different views of the modes of content are used to present the user with an interface that is responsive to configurations of the device and responsive to activity being performed by the user. Further the elements that comprise the graphical user interface are configured to present a summarized view of available actions and content, in order to simplify user interaction. The different views present different organizations of the interface elements and in some example display only certain ones of the modes of content in order to reduce the number of options a user must navigate to accomplish an objective.

According to one aspect of the present invention, a customized user interface for a computer system with a plurality selectable I/O profiles configured to present computer operations to a user in a format configured to a selected I/O profile is provided. The user interface comprises a map based graphical user interface displayed on the computer system, the map based user interface comprising a plurality of views of a plurality of visual representations of computer content, wherein the computer content includes at least one of selectable digital content, selectable computer operations and passive digital content, and the plurality of visual representations of computer content rendered on the computer display, wherein the plurality of visual representations of computer content include an association to a first view of the plurality of views, the first view including the computer content, and wherein the each of the plurality of visual representations is responsive to focus and execution, wherein execution

includes clicking on the visual representation, and an execution component comprising at least one computer hardware element configured to transition the computer system display between the plurality of views, wherein the execution component further comprises a view selector component configured to select one of the plurality of views for display on a computer system in response to a computer system configuration. According to one embodiment of the present invention, the execution component is further configured to transition between the plurality of views in response to execution of at least one of a computer system operation, a visual representation, a computer system configuration, and a change in computer system configuration. According to another embodiment of the invention, the user interface further comprises a plurality of modes of content for the computer content rendered on the computer display.

According to one aspect of the present invention, the plurality of views are configured to organize modes of content into different views. According to another embodiment of the invention, the plurality of modes of content comprise at least one of a web content mode, a channel content mode, a media content mode, an application content mode, a communication content mode, and a passive content mode. According to another embodiment of the invention, the plurality of modes of content include a web content mode, wherein the web content mode is configured to display web based content for proximal viewing by a user. According to another embodiment of the invention, the plurality of modes of content include a channel content mode, wherein the channel content mode is configured to display web based content for non-proximal viewing by a user. According to another embodiment of the invention, the plurality of modes of content include a media content mode, wherein the media content mode is configured to display media based content for non-proximal viewing by a user mode. According to another embodiment of the invention, the plurality of modes of content include a web content mode, wherein the web content mode is optimized to display web based content for proximal viewing by a user. According to another embodiment of the invention, the plurality of modes of content include a channel content mode, wherein the channel content mode is optimized to display web based content for non-proximal viewing by a user. According to another embodiment of the invention, the plurality of modes of content include a media content mode, wherein the media content mode is optimized to display media based content for non-proximal viewing by a user mode.

According to one embodiment of the present invention, the media based content includes at least one of digital photos, digital audio files, and digital video files. According to another embodiment of the invention, the media based content is accessed through a remote service. According to another embodiment of the invention, the plurality of modes of content include a connect content mode, wherein the connect content mode is configured to display computer configuration operations for viewing by a user. According to another embodiment of the invention, the plurality of modes of content include an application content mode, wherein the application content mode is configured to display computer applications for use by a user. According to another embodiment of the invention, in the plurality of views includes a home view configured to organize a plurality of content modes. According to another embodiment of the invention, the plurality of views includes a channel view configured to organize a single content mode. According to another embodiment of the invention, the plurality of views includes a channel view configured to organize dual content modes. According to another embodiment of the invention, the plurality of modes of content include a passive content mode, wherein the passive content mode is configured to display web based content for non-proximal viewing without user interaction.

According to one embodiment of the present invention, the plurality of modes of content include a passive content mode, wherein the passive content mode is optimized to display web based content for non-proximal viewing without user interaction. According to another embodiment of the invention, the plurality of views includes a screen saver view configured to organize selected content modes for passive viewing. According to another embodiment of the invention, the plurality of views further comprise a first layer, wherein the first layer organizes computer operations, including navigation operations, into groups based on similar functional operation. According to another embodiment of the invention, the first layer maps to groupings of lower level functionality. According to another embodiment of the invention, the first layer include navigation operations maps to a seconding layer comprising computer operations for interacting with computer content. According to another embodiment of the invention, levels of computer functions are segregated based on proximity of the operation to a source of digital content, higher levels including operations that navigate to lower level operations that permit interaction with computer content.

According to one embodiment of the present invention, the first layer comprises a home view and a channel view, and the first layer is further configured to organize and simplify access to lower level functions. According to another embodiment of the invention, the visual representations comprise a lower layer relative to the first layer and include lower level functions. According to another embodiment of the invention, the plurality of views includes a home view organizing a plurality of visual representations of digital content, wherein the home view is displayed responsive to a computer system configuration. According to another embodiment of the invention, the computer system configuration comprises a physical positioning of the computer system about a longitudinal axis of rotation. According to another embodiment of the invention, the computer system configuration further comprises a physical positioning of a computer system display relative to a base of the computer system. According to another embodiment of the invention, the home view comprises a header display and a body display. According to another embodiment of the invention, the header display comprises a lateral bar extending from the left of the computer display screen to the right of the computer display screen. According to another embodiment of the invention, the user interface further comprises a search tool displayed in the header display, wherein the search tool is configured to accept search terms entered by a user and in response to execution, causes the computer system to navigate to a view of a first visual representation of digital content, wherein the digital content includes a search engine, and the search engine presents results for the search terms.

According to one embodiment of the present invention, the user interface further comprises a storage component configured to retain a previous view state. According to another embodiment of the invention, the execution component is further configured to cause the computer system to transition to a previous view in response to execution of a navigation element by a user. According to another embodiment of the invention, the user interface further comprises a navigation element disposed in the header display. According to another embodiment of the invention, the body display is rendered below the header display in the display screen of the computer system. According to another embodiment of the invention,

the body comprises an organization of the plurality of visual representations of computer content rendered on the computer display. According to another embodiment of the invention, the user interface further comprises a display threshold for a screen rendered in the computer display. According to another embodiment of the invention, the home view is configured into pages based on the display of the computer system and the display threshold. According to another embodiment of the invention, the display threshold establishes a maximum number of visual representations display per page of the home view. According to another embodiment of the invention, the user interface further comprises an indication of visual representations displayed on adjacent pages of the home view, wherein the indication is display within the body of the home view.

According to one embodiment of the present invention, the user interface further comprises a nascent card displayed in the body of the home view, wherein the nascent card is configured to permit generation of additional visual representations of digital content. According to another embodiment of the invention, the execution component is further configured to execute a process for creating a visual representation in response to execution of the nascent card, wherein the process for creating a visual representation includes acts of transitioning to a quick access view, generating a mapping to online digital content, executing the mapping, and displaying a first view of the mapped digital content. According to another embodiment of the invention, the user interface further comprises a quick access view, wherein the quick access view is configured to permit user generation of a mapping between digital content and a visual representation. According to another embodiment of the invention, the quick access view permits a user to select from a display of frequently accessed web content to generate the mapping. According to another embodiment of the invention, the quick access view permits a user to select from a display of stored bookmarks to generate the mapping. According to another embodiment of the invention, the quick access view permits a user to enter a url to generate the mapping. According to another embodiment of the invention, the plurality of views includes a channel view, and the view selector component is further responsive to an integrated scroll wheel on the computer system. According to another embodiment of the invention, the view selector component is further configured to transition the computer system to the channel view in response to manipulation of the integrated scroll wheel.

According to one embodiment of the present invention, the channel view further comprises a channel selector. According to another embodiment of the invention, the channel selector comprises a display of a sequence of visual representations presenting a channel content mode. According to another embodiment of the invention, the display of the sequence of visual representations is responsive to manipulation of the integrated scroll wheel, and manipulation of the integrated scroll wheel causes the computer system to render a next visual representation in the display of the sequence of visual representations. According to another embodiment of the invention, the visual representations are responsive to execution by a selector, including a button. According to another embodiment of the invention, the button is available in a plurality of computer system configurations. According to another embodiment of the invention, the execution component is further configured to cause the computer system to transition to the first view including the digital content in response to execution of the selector by a user. According to another embodiment of the invention, the user interface further comprises a storage component configured to retain a current computer system configuration state.

According to one embodiment of the present invention, the storage component is further configured to retain a current view state. According to another embodiment of the invention, the execution component is further configured to transition the computer system display between the plurality of views, responsive to at least one of the current computer system configuration state and the current view state. According to another embodiment of the invention, the execution component is configured to transition to a channel view in response to manipulation of an integrated scroll wheel, when the computer system is in a laptop and an easel configuration. According to another embodiment of the invention, the user interface further comprises a scroll wheel threshold configured to require additional manipulations of the integrated scroll in order to cause the transition to the channel view, when the current computer system configuration state indicates the computer system is in a laptop configuration. According to another embodiment of the invention, the execution component is further configured to transition from the first view and a home view to a channel view in response to a change in computer system configuration state from laptop to easel.

According to another embodiment, the interface discussed above is displayed on a portable computer configurable between a plurality of display modes including a closed mode, a laptop mode and an easel mode. The portable computer further comprises a display component including a display screen, a base, a hinge assembly at least partially housed within the base and configured to pivotably couple the display component to the base, wherein the display component is rotatable about a longitudinal axis running along an interface between the display component and the base, wherein, in the closed mode, the display screen is disposed substantially against the base, wherein rotating the display component about the longitudinal axis up to approximately 180 degrees from the closed mode configures the portable computer into the laptop mode, and wherein rotating the display component about the longitudinal axis beyond approximately 180 degrees from the closed mode configures the portable computer into the easel mode.

According to one aspect of the present invention, a method for presenting a customized user interface for a computer system with a plurality selectable I/O profiles to a user is provided. The method comprises displaying a a map based graphical user interface on the computer system, the act of displaying the map based user interface includes acts of displaying a plurality of views of a plurality of visual representations of computer content, wherein the computer content includes at least one of selectable digital content, selectable computer operations and passive digital content, and displaying the plurality of visual representations of computer content rendered on the computer display, wherein the plurality of visual representations of computer content include an association to a first view of the plurality of views, the first view including the computer content, and wherein the each of the plurality of visual representations is responsive to focus and execution, wherein execution includes clicking on the visual representation, and executing, by a computer processor, a transition in the computer system display between the plurality of views, wherein the act of executing includes an act of selecting one of the plurality of views for display on a computer system in response to a computer system configuration. According to one embodiment of the present invention, the act of executing occurs in response to an act of permitting execution of at least one of a computer system operation, a

visual representation, a computer system configuration, and a change in computer system configuration. According to another embodiment of the invention, the method further comprises an act of displaying a plurality of modes of content for the computer content on the computer display, wherein the plurality of modes of content comprise at least one of a web content mode, a channel content mode, a media content mode, an application content mode, a communication content mode, and a passive content mode.

According to one embodiment of the present invention, the plurality of views are configured to organize modes of content into different views. According to another embodiment of the invention, the web content mode is configured to display web based content for proximal viewing by a user, wherein the channel content mode is configured to display web based content for non-proximal viewing by a user, wherein the media content mode is configured to display media based content for non-proximal viewing by a user mode, wherein the application content mode is configured to display computer applications for use by a user, wherein the communication content mode is configured to display computer configuration operations for viewing by a user, and wherein the passive content mode is configured to display web based content for non-proximal viewing without user interaction. According to another embodiment of the invention, in the plurality of views includes a home view and a channel view, and the method further comprises acts of organizing a plurality of content modes into the home view; and organizing at least one of a single content mode and a two content modes into the channel view. According to another embodiment of the invention, the plurality of views includes a screen saver view, and the method further comprises an act of organizing selected content modes for passive viewing in the screen saver view.

According to one embodiment of the present invention, the plurality of views includes a home view, and the method further comprises organizing a plurality of visual representations of digital content into the home view, wherein the home view is displayed responsive to a computer system configuration, displaying the home view in response to a compute system configuration, wherein the act of displaying the home view includes an act of displaying a header display and a body display in the home view, wherein the header display comprises a lateral frame extending from the left of the computer display screen to the right of the computer display screen, and wherein the body display is rendered below the header display in the display screen of the computer system. According to another embodiment of the invention, the computer system configuration comprises a physical positioning of the computer system display relative to a base of the computer system about a longitudinal axis of rotation. According to another embodiment of the invention, the method further comprises displaying a search tool in the header display, accepting entry of search terms through an I/O device, navigating to a view of a first visual representation of computer content, wherein the computer content includes a search engine, and the search engine presents results for the search terms, in response to an act of executing the search tool. According to another embodiment of the invention, the method further comprises an act of storing in a computer memory a previous view state. According to another embodiment of the invention, the method further comprises acts of displaying a navigation element in the header display, permitting execution of the navigation element by a user, and transitioning the computer system display to a previous view, in response to the act of permitting.

According to one embodiment of the present invention, the home view further comprises at least one display page and the method further comprising acts of displaying the plurality of visual representations of computer content rendered on the computer display in the body display, and displaying a maximal number of visual representations in a display page of the home view. According to another embodiment of the invention, the method further comprises displaying an indication of visual representations displayed on adjacent display pages in the home view, wherein the indication is displayed within the body of the home view. According to another embodiment of the invention, the method further comprises acts of displaying a nascent card in the body of the home view, permitting execution functionality associated with the nascent card, and generating an additional visual representations of digital content in response to execution of the functionality associated with the nascent card. According to another embodiment of the invention, the method further comprising act of executing a process for creating a visual representation in response to execution of the functionality associated with nascent card, wherein the process for creating a visual representation includes acts of transitioning to a quick access view, generating a mapping to online digital content, executing the mapping, and displaying a first view of the mapped digital content.

According to one embodiment of the present invention, the method further comprises acts of displaying a quick access view, permitting a user to select a source of digital content in the quick access view, and generating a mapping between the source of digital content and a visual representation in response to an act of selecting a source of digital content. According to another embodiment of the invention, the plurality of views includes a channel view, and the act of executing a transition occurs in response an act of activating an integrated scroll wheel on the computer system. According to another embodiment of the invention, the method further comprises an act of displaying a channel selector including an act of displaying a sequence of visual representations. According to another embodiment of the invention, the act of displaying the sequence of visual representations is responsive to manipulation of the integrated scroll wheel, and the method further comprises and act of displaying a next visual representation from the sequence of visual representations, in response to manipulation of the integrated scroll wheel. According to another embodiment of the invention, the method further comprises an act of storing in a computer memory a current computer system configuration state and a current view state. According to another embodiment of the invention, the act of executing, by a computer processor, a transition in the computer system display the execution component, includes an act of transitioning the computer system display between the plurality of views, responsive to at least one of the current computer system configuration state and the current view state.

According to one embodiment of the present invention, the transition occurs to a channel view in response to manipulation of an integrated scroll wheel, when the computer system is in a laptop and an easel configuration. According to another embodiment of the invention, the transition occurs from at least one of the first view and a home view to a channel view in response to a change in computer system configuration state from laptop to easel.

According to one aspect of the present invention, a computer-readable medium having computer-readable signals stored thereon that define instructions that, as a result of being executed by a computer, instruct the computer to perform the method for presenting a customized user interface for a com-

puter system with a plurality selectable I/O profiles to a user as described above is provided.

According to one aspect of the present invention, a system for presenting a customized user interface for a system with a plurality selectable I/O profiles is provided. The system comprises a first user interface component configured to display a plurality of views of a plurality of visual representations of computer content, wherein the computer content includes at least one of selectable digital content, selectable computer operations and passive digital content, a second user interface component configured to display the plurality of visual representations of computer content on the computer display, wherein the plurality of visual representations of computer content include an association to a first view of the plurality of views, the first view including the computer content, and wherein the each of the plurality of visual representations is responsive to focus and execution, wherein execution includes clicking on the visual representation, and an execution component configured to execute a transition in the computer system display between the plurality of views, wherein the execution component further comprises a view selector component act configured to select one of the plurality of views for display on a computer system in response to a computer system configuration. According to one embodiment of the present invention, the execution component is further configured to transition between the plurality of views in response to execution of at least one of a computer system operation, a visual representation, a computer system configuration, and a change in computer system configuration. According to another embodiment of the invention, the second user interface component is further configured to display a plurality of modes of content for the computer content rendered on the computer display, wherein the plurality of modes of content comprise at least one of a web content mode, a channel content mode, a media content mode, an application content mode, a communication content mode, and a passive content mode. According to another embodiment of the invention, the plurality of views are configured to organize modes of content into different views. According to another embodiment of the invention, the web content mode is configured to display web based content for proximal viewing by a user, wherein the channel content mode is configured to display web based content for non-proximal viewing by a user, wherein the media content mode is configured to display media based content for non-proximal viewing by a user mode, wherein the application content mode is configured to display computer applications for use by a user, wherein the communication content mode is configured to display computer configuration operations for viewing by a user, and wherein the passive content mode is configured to display web based content for non-proximal viewing without user interaction.

According to one embodiment of the present invention, the first user interface component is further configured to display a home view configured to organize a plurality of content modes, and a channel view configured to organize at least one of a single content mode and two content modes. According to another embodiment of the invention, the plurality of views includes a screen saver view configured to organize selected content modes for passive viewing. According to another embodiment of the invention, the first user interface component is further configured to display a home view organizing a plurality of visual representations of digital content, wherein the home view comprises a header display and a body display, and wherein the header display comprises a lateral frame extending from the left of the computer display screen to the right of the computer display screen, wherein the body display is rendered below the header display in the display screen of the computer system. According to another embodiment of the invention, the system is configured to permit selection of a computer system configuration, and the computer system configuration comprises a physical positioning of the computer system display relative to a base of the computer system about a longitudinal axis of rotation. According to another embodiment of the invention, the first user interface component is further configured to display a search tool in the header display, wherein the search tool is configured to accept search terms entered by a user, and wherein the execution component is further configured to causes the computer system to navigate to a view of a first visual representation of digital content, wherein the digital content includes a search engine, and the search engine presents results for the search terms in response to execution of the search tool.

According to one embodiment of the present invention, the system further comprises a storage component configured to retain a previous view state. According to another embodiment of the invention, the execution component is further configured to cause the computer system to transition to a previous view in response to execution of a navigation element by a user. According to another embodiment of the invention, the first user interface component further comprises a display of the navigation element in the header display. According to another embodiment of the invention, the body display comprises an organization of the plurality of visual representations of computer content rendered on the computer display, and the home view further comprises display pages in response to a display threshold establishing a maximal number of visual representations displayed per display page. According to another embodiment of the invention, the home view further comprises an indication of visual representations displayed on adjacent display pages of the home view, wherein the indication is displayed within the body of the home view. According to another embodiment of the invention, the second user interface component further comprises a nascent card displayed in the body of the home view, wherein the nascent card is configured to permit generation of additional visual representations of digital content. According to another embodiment of the invention, the execution component is further configured to execute a process for creating a visual representation in response to execution of the nascent card, wherein the process for creating a visual representation includes acts of transitioning to a quick access view, generating a mapping to online digital content, executing the mapping, and displaying a first view of the mapped digital content.

According to one embodiment of the present invention, the first user interface component further comprises a quick access view, wherein the quick access view is configured to permit user generation of a mapping between digital content and a visual representation. According to another embodiment of the invention, the plurality of views includes a channel view, and the view selector component is further responsive to an integrated scroll wheel on the computer system. According to another embodiment of the invention, the view selector component is further configured to transition the computer system to the channel view in response to manipulation of the integrated scroll wheel. According to another embodiment of the invention, the channel view further comprises a channel selector comprising a display of a sequence of visual representations presenting a channel content mode. According to another embodiment of the invention, the display of the sequence of visual representations is responsive to manipulation of the integrated scroll wheel, and manipulation

of the integrated scroll wheel causes the computer system to render a next visual representation in the display of the sequence of visual representations. According to another embodiment of the invention, the system further comprises a storage component configured to retain a current computer system configuration state and a current view state. According to another embodiment of the invention, the execution component is further configured to transition the computer system display between the plurality of views, responsive to at least one of the current computer system configuration state and the current view state. According to another embodiment of the invention, the execution component is configured to transition to a channel view in response to manipulation of an integrated scroll wheel, when the computer system is in a laptop and an easel configuration. According to another embodiment of the invention, the execution component is further configured to transition from the first view and a home view to a channel view in response to a change in computer system configuration state from laptop to easel.

According to one embodiment, a portable computer is configurable between various modes, including a closed mode, a laptop mode, an easel mode, a flat mode and a frame mode. The portable computer may comprise a display component including a display screen, a base, and a hinge assembly at least partially housed within the base and configured to pivotably couple the display component to the base. The display component may be rotatable about a longitudinal axis running along an interface between the display component and the base. In the closed mode, the display screen may be disposed substantially against the base, and rotating the display component about the longitudinal axis up to approximately 180 degrees from the closed mode may configure the portable computer into the laptop mode. Rotating the display component about the longitudinal axis beyond approximately 180 degrees axis from the closed mode may configure the portable computer into the easel mode.

In one example of the portable computer, the display component is rotatable about the longitudinal axis up to approximately 320 degrees from the closed mode. In another example, the portable computer comprises a display orientation module that displays content on the display screen in one of a plurality of orientations relative to the longitudinal axis. The orientation of the displayed content may be dependent on the current display mode of the portable computer, or may be configurable responsive to a user input. The portable computer may further comprise a mode sensor which detects a current display mode of the portable computer, and the display orientation module may display content on the display screen in an orientation dependent on the current display mode detected by the mode sensor. Depending on the hinge assembly used, the longitudinal axis may comprises multiple parallel axes, and the hinge assembly may be configured to permit rotation of the display component about any of the multiple parallel axes to configure the portable computer between the plurality of display modes.

Still other aspects, embodiments, and advantages of these exemplary aspects and embodiments, are discussed in detail below. Moreover, it is to be understood that both the foregoing information and the following detailed description are merely illustrative examples of various aspects and embodiments, and are intended to provide an overview or framework for understanding the nature and character of the claimed aspects and embodiments. Any embodiment disclosed herein may be combined with any other embodiment in any manner consistent with the objects, aims, and needs disclosed herein, and references to "an embodiment," "some embodiments," "an alternate embodiment," "various embodiments," "one embodiment" or the like are not necessarily mutually exclusive and are intended to indicate that a particular feature, structure, or characteristic described in connection with the embodiment may be included in at least one embodiment. The appearances of such terms herein are not necessarily all referring to the same embodiment.

BRIEF DESCRIPTION OF THE DRAWINGS

Various aspects of at least one embodiment are discussed below with reference to the accompanying figures, which are not intended to be drawn to scale. The figures are included to provide illustration and a further understanding of the various aspects and embodiments, and are incorporated in and constitute a part of this specification, but are not intended as a definition of the limits of the invention. Where technical features in the figures, detailed description or any claim are followed by references signs, the reference signs have been included for the sole purpose of increasing the intelligibility of the figures, detailed description, and/or claims. Accordingly, neither the reference signs nor their absence are intended to have any limiting effect on the scope of any claim elements. In the figures, each identical or nearly identical component that is illustrated in various figures is represented by a like numeral. For purposes of clarity, not every component may be labeled in every figure. In the figures:

FIG. **1** is an illustration of one example of a portable computer, according to aspects of the invention, in a "laptop" configuration;

FIG. **2** is a screen shot illustrating one example of a graphical user interface showing a home view, according to aspects of the invention;

FIG. **3**A-C are screen shots illustrating examples of a graphical user interface showing web page views, according to aspects of the invention;

FIG. **4** is a perspective view of the portable computer of FIG. **1** in the easel mode;

FIG. **5** is a screen shot illustrating one example of a graphical user interface showing a quick access view, according to aspects of the invention;

FIG. **6** is a screen shot illustrating one example of a graphical user interface showing a bookmark view, according to aspects of the invention;

FIG. **7**A-B are screen shots illustrating examples of a graphical user interface showing a web page view, according to aspects of the invention;

FIG. **8** is a screen shot illustrating one example of a graphical user interface showing a home view, according to aspects of the invention;

FIG. **9** is an illustration of an example conceptual model of a graphical user interface, according to aspects of the invention;

FIG. **10** illustrates an example process for generating a visual representation of computer content, according to aspects of the invention;

FIG. **11** is a block diagram of one example of a portable computer user interface architecture, according to aspects of the invention;

FIG. **12** is a screen shot illustrating one example of a graphical user interface, according to aspects of the invention;

FIG. **13** is a screen shot illustrating another example of a graphical user interface according to aspects of the invention;

FIG. **14** illustrates an example of a behavior model for display of cards responsive to computer focus, according to aspects of the invention;

FIG. **15**A is a screen shot of an example web card in a non-hover state, according to aspects of the invention;

FIG. **15**B is a screen shot of an example web card in a hover state, according to aspects of the invention;

FIG. **16** is a screen shot of examples of option views of cards, according to aspects of the invention;

FIG. **17** is an illustration of an example of the portable computer in the laptop mode, according to aspects of the invention;

FIG. **18**A-E illustrate examples of a header display responsive to focus and user activity, according to aspects of the invention;

FIG. **19** is a screen shot of a web page view including a toolbar, according to aspects of the invention;

FIG. **20**A-B are screen shots illustrating examples of a graphical user interface showing a channel page view, according to aspects of the invention;

FIG. **21** is a screen shot illustrating examples of a graphical user interface showing a channel full view, according to aspects of the invention;

FIG. **22** is a screen shot illustrating one example of a graphical user interface showing a bookmark view, according to aspects of the invention;

FIG. **23** is a screen shot illustrating one example of a graphical user interface showing a channel view, according to aspects of the invention;

FIG. **24** is a screen shot illustrating one example of a graphical user interface showing a channel page view, according to aspects of the invention;

FIG. **25**A-B are illustrations of example logical diagrams of the behavior for the channel view, according to aspects of the invention;

FIG. **26** is an illustration of the portable computer configured into a "frame" mode, according to aspects of the invention;

FIG. **27** is an illustration of the portable computer configured into a "flat" mode, according to aspects of the invention;

FIG. **28** is an illustration of an example logical diagram of the behavior for the channel view, according to aspects of the invention;

FIG. **29**A-B are screen shots illustrating example graphical user interfaces showing a web page view with a share interface, according to aspects of the invention;

FIG. **30** is a screen shot illustrating an example graphical user interface showing a shared card, according to aspects of the invention;

FIG. **31** is a screen shot illustrating an example graphical user interface showing a shared card notification, according to aspects of the invention;

FIG. **32** is a screen shot illustrating an example graphical user interface showing a notification messages, according to aspects of the invention;

FIG. **33** is a screen shot illustrating an example graphical user interface showing a notification, according to aspects of the invention;

FIG. **34** is a screen shot illustrating an example graphical user interface showing a notification, according to aspects of the invention;

FIG. **35** is a screen shot illustrating an example graphical user interface showing a web page view with a download interface, according to aspects of the invention;

FIG. **36** is a flow diagram of one example process for interpreting executable operations into streamlined operations according to aspects of the invention;

FIG. **37** is a flow diagram of one example process for permitting selection of executable operations in content according to aspects of the invention;

FIG. **38** is a flow diagram of one example process for transforming executable operations into remote storage operations according to aspects of the invention;

FIG. **39** is a flow diagram of one example process for obtaining service access information, according to aspects of the invention;

FIG. **40** is a flow diagram of one example process for pre-configuring a streamlined device, according to aspects of the invention;

FIG. **41**A is a screen shot illustrating an example graphical user interface showing a web page view with a print interface, according to aspects of the invention;

FIG. **41**B are screen shots illustrating examples of print and download interfaces, according to aspects of the invention;

FIG. **42** is a flow diagram of one example process for streamlining user interactions with digital content, according to aspects of the invention;

FIG. **43** is a flow diagram of one example process for streamlining user interactions with computer content, according to aspects of the invention;

FIG. **44** is a flow diagram of one example process for permitting a user to interact with computer content, according to aspects of the invention;

FIG. **45** is a flow diagram of one example process for providing consistent accessibility to computer content, according to aspects of the invention;

FIG. **46** is a flow diagram of one example process for providing consistent navigation operations to a user, according to aspects of the invention;

FIG. **47**A-B are flow diagrams of example processes for generating a user interface element, according to aspects of the invention;

FIG. **48** is a flow diagram of one example process for permitting a user to select a viewing mode for a streamlined device, according to aspects of the invention;

FIG. **49**A is a flow diagram of one example process for transitioning between a lean forward view to a lean backward view, according to aspects of the invention;

FIG. **49**B is a flow diagram of one example process for transitioning between user views, according to aspects of the invention;

FIG. **50** is a flow diagram of one example process for organizing a plurality of views and GUI elements into a consistent presentation, according to aspects of the invention;

FIG. **51** is a block diagram of a computer system for streamlining user interactions with computer content according to aspects of the invention; and

FIGS. **52**A-C are diagrams illustrating different positions of the portable computer of FIG. **4** in easel mode;

FIG. **53**A is an illustration of a portion of the portable computer of FIG. **1** in the laptop mode, illustrating a hinge assembly according to aspects of the invention; and

FIG. **53**B is an in illustration of a portion of the portable computer of FIG. **1** in the easel mode, illustrating the hinge assembly according to aspects of the invention.

DETAILED DESCRIPTION

It is realized that the conventional wisdom with respect to such "feature packing" as discussed above suffers from significant flaws. Typical computer users simply can't take advantage of all the functionality offered, either the services and features offered by their own computer, or the services and features offered by online providers. The complexity of the interface (both hardware and software) hampers adoption, as does the volume of features offered. For example, third party service provides often find difficulty in subscribing new

users, educating existing users, and providing integration of feature sets for the features they provide as well as those offered by other service providers.

Synergy between services providers can be found and exploited by even the most novice user through streamlined computer systems and user interface presentation. According to one aspect, the interplay between various third party services and computer features can be readily appreciated by even the most novice user because the various functionality and features sets are easily accessible through the streamlined access controls and consistent user interfaces. As discussed further below, in one example, the graphical user interface improves transitions from one service to another, through a consistent view of available content. A user is able to navigate easily and quickly from one content provider to another using the organized view. The elements that comprise the view further facilitate navigation and transition by, for example, retaining state information and in another example by remaining persistent to the view.

According to another aspect, streamlining the computer system/device the user interacts with includes establishing a first set of I/O devices that a user needs to operate and providing that first set of I/O devices as a physical configuration of the device. Additionally, providing the user the ability to change from the first set of I/O devices, a first I/O profile, to another at will improves the user experience and permits the user to dynamically select a preferred I/O profile best suited to the user's present need. According to one embodiment, user selection includes transitioning from a lean back mode to a lean forward mode and vice versa. In one embodiment, the user's computer device is configured to have multiple I/O profiles that can be selected by physically manipulating the orientation of the computer device itself.

According to another aspect, streamlining user interactions with the computer system/device includes representing computer based content in visual representations that render computer operations/behavior in a consistent manner. The visual representations are adapted to permit easy user interaction even upon selection of a first I/O profile or the change in selection of an I/O profile. According to one embodiment, the visual representations are rendered as cards, as discussed in more detail below. Different types of cards may be employed to render different types of available content. For example, web based content, may be rendered as a web card (e.g. FIG. **2**, **206**) that is associated with a mapping to web content. Some web cards map directly to web pages and in response to selection of the web card the computer device executes the mapping and displays a web view of the content. Other cards may be used to provide interactive displays selectable by a user. In another example, system operations are displayed as system cards (e.g. FIG. **2**, **212**), which are associated with mappings to system operations, for example communications configurations, and may comprise a settings card, among other system options. Another type of card includes a channel card (e.g. FIG. **2**, **204** configured to stream web based content in a manner that allows for summarization of content, while still providing the ability to fully appreciate the summarized content.

Those skilled in the art will appreciate that previous attempts have been made to present summary views of available content. However, known summarized content typically suffers from significant flaws. For example summarization of web based content simply reduces the display size of the information in the content. With respect to news headlines, for example, this often prevents a user from being able to appreciate the summarize content. Quite simply truncating a headline prevents the user from understanding the context of the portion of the headline s/he is able to read. In other examples, headlines are displayed to such a reduce size that an average computer user simply cannot read or appreciate them. Using channel cards according to aspects and embodiments, summarized content may be presented in a manner that permits appreciation and interaction with the summarized content itself. In another example, channel cards are configured to present a streamlined view that cannot only be appreciated and interacted, but may be transitioned from one mode of viewing to another without loss of the ability to appreciate and interact with the streamlined view.

According to one aspect, streamlining of the user device and streamlining of the user interface provided in such devices leads to simplified interaction between a user and features. The streamlining may impact not only features of the system, but features provided by services accessed by the system. Streamlined activity leads directly to better adoption, understanding and integration of both new and old features available to users. The consistency of user experience even with third party service providers, for example, fosters familiarity not only with a particular user and his/her interactions with a particular device, but also with other users of the same/similar device. A common experience may be created for multiple users, fostering a community experience. According to one example, providing a common experience includes establishing a global profile for a user of a streamlined device. The global profile, in some examples, is retained in remote storage, and accessed upon start up of any streamlined device. The global profile permits the user's experience to be consistent even across multiple streamlined devices. In one example, configurations and customizations are retained in remote storage; changes on one device may be written to remote storage, propagating changes across multiple streamlined devices that access the remote storage. Thus a common experience is also provided across multiple devices.

According to another aspect, the common experience may also include a community aspect. The community aspect includes sharing of content between users, sharing of content and configurations, sharing of content, configurations, and customizations, among many options. In particular, sharing may involve the transmission of user interface elements to other users. In one example, a user may share a card and any of its configurations with another user. Access to the shared user interface elements, in some embodiments, facilitates communal computer usage. In one example, a first user may be watching media on their streamlined device, another user known to the first user, may receive a user interface element that retains information related to the accessed content and information related to the present context. That is for the first user watching a movie, the first user may share the user interface element through which s/he is accessing the movie, and permit the another user not only to watch the movie, but to take up the movie at the same point in time, so in essence, they get to enjoy the movie together. Content and context retention by user interface elements that can be shared provides unique advantages to the users of the streamlined devices.

According to another aspect, various operations provided on conventional systems are adapted for streamlined processing. In one example, operations that require large amounts of computer storage are transformed in remote storage requests. In one embodiment, a streamlined device is configured to identify local storage request and transform them into a storage request to an on-line service provider identified in a user and/or device profile. In another embodiment, the system prompts a user to identify a service provider in response to a

local request. Various operations may be transformed, including download and print operations, among others.

It is to be appreciated that embodiments of the methods and apparatus discussed herein are not limited in application to the details of construction and the arrangement of components set forth in the following description or illustrated in the accompanying figures. The methods and apparatus are capable of implementation in other embodiments and of being practiced or of being carried out in various ways. Examples of specific implementations are provided herein for illustrative purposes only and are not intended to be limiting. In particular, acts, elements and features discussed in connection with any one or more embodiments are not intended to be excluded from a similar role in any other embodiments.

Also, the phraseology and terminology used herein is for the purpose of description and should not be regarded as limiting. Any references to embodiments or elements or acts of the systems and methods herein referred to in the singular may also embrace embodiments including a plurality of these elements, and any references in plural to any embodiment or element or act herein may also embrace embodiments including only a single element. References in the singular or plural form are not intended to limit the presently disclosed systems or methods, their components, acts, or elements. The use herein of "including," "comprising," "having," "containing," "involving," and variations thereof is meant to encompass the items listed thereafter and equivalents thereof as well as additional items. References to "or" may be construed as inclusive so that any terms described using "or" may indicate any of a single, more than one, and all of the described terms. Any references to front and back, left and right, top and bottom, and upper and lower are intended for convenience of description, not to limit the present systems and methods or their components to any one positional or spatial orientation.

Device Examples and Configuration Options

Various aspects, including the integration between the user interface, its views, and navigation options are further illustrated in the user device itself. According to one embodiment, the user interface and the visual representations that comprise the interface are configured to be responsive to the physical configuration of the user device. In one example, the view presented to user is configured to be responsive to the mode/configuration of the device.

According to one aspect, systems and methods are provided for simplifying the presentation of multi-media features and options into an integrated and streamlined presentation format. Streamlining presentation includes reducing the number of options that a user must navigate/configure in order to take advantage of new systems and features, simplifying the process of adoption and education. In one embodiment a system is provided with only the physical components necessary to achieve streamlined presentation of both operating system features and integration of third party services. For example, a streamlined hardware device provides for (in comparison to typical desktop and laptop systems) a reduced user input platform as a first I/O profile, comprising in one configuration a scroll wheel and a button interface. Other I/O profiles are available for user selection by manipulation of the device itself. In one embodiment, an easel mode presents the user with the first I/O profile and by rotating the computer device about a longitudinal axis; the user may select a second I/O profile, including a keyboard. The transition from one I/O profile to another may also cause the computer device to alter its display. In one example, the user interface provided to the user is responsive to selection of device mode and/or selection of I/O profile.

It is to be appreciated that reducing the number of I/O devices achieves simplicity of design and ease of operation by the user, and at the same time may increase the complexity of the graphical user interfaces needed to support interaction with systems and third parties that anticipate, rely on, or expect additional I/O devices. Streamlining device operation by the user is balanced against sophistication of user the interface required to enable user interaction with the same features used with additional I/O devices. According to one embodiment, the user interface layer provides simplified accessibility based on the device's I/O platform, and for some embodiments, the user interface layer is responsive to device configurations that change the device's I/O capabilities. In other embodiments, the user interface is responsive to changes in the device's mode. In some examples, changes in device mode and changes I/O profile will occur together, however, in other examples a change in mode or a change in I/O profile will not require a corresponding change in profile or mode respectively.

One example of a streamlined device includes a portable computer that is configurable between a laptop mode (in which the portable computer has a conventional laptop appearance) and an easel mode in which the base of the computer and its display component stand upright forming an inverted "V," as discussed further herein. Certain aspects and embodiments are directed to a portable computer that is configurable between different operating modes, including a laptop mode (in which the portable computer has a conventional laptop appearance), a flat mode, a frame mode, and an easel mode in which the base of the computer and its display component stand vertically forming an inverted "V," as discussed further herein. Reference to modes of the computer, modes of the device are intended to include the physical configuration of the portable computer/device.

The portable computer is capable of different display formats and functionality in the different modes, and includes a graphical user interface that may work seamlessly with the computer hardware to provide a unified, comfortable, holistic user experience. In particular, the portable computer may provide access to a wide array of functions, both those traditionally provided by computing devices and those traditionally provided by other passive information devices. For example, the hardware and software, including the graphical user interface, of the portable computer may be focused toward providing access to entertainment media, such as audio and video (e.g., playing music, streaming video, viewing photographs, etc.), email, and internet, while also providing state-of-the-art computer processing capability.

Referring to FIG. **1**, there is illustrated one example of a portable computer according to aspects of the invention. In FIG. **1**, the portable computer **100** is illustrated in the "laptop" mode, with the display component **102** inclined at a viewing angle from the base **104**. The display component **102** is pivotably coupled to the base **104** by a hinge assembly (not shown) that allows the display component to be rotated with respect to the base. The hinge assembly may include a single or multiple hinges, which may be any of a variety of hinge types, including, but not limited, to single-axis hinges, multiple-axis hinges, geared hinges, etc. In one example, the hinge assembly allows the display component **102** to be rotated (or tilted) about a longitudinal axis **101** running along an interface between the display component and the base **104**, as illustrated in FIG. **1** and discussed further below. The base **104** includes a keyboard **106** and internal electronic components (not shown), such as a central processing unit, memory, and other components necessary to operate the portable computer, as known to those skilled in the art. In some embodi-

ments, the base **104** may also include a touch pad **108** or trackball (not shown) for receiving user commands, as known to those skilled in the art.

Still referring to FIG. **1**, the display component **102** includes a display screen **110**, and may also include a camera **112**, microphone **114**, and infrared receiver **116**, as discussed further below. It is to be appreciated that the locations of the camera **112**, microphone **114** and infrared receiver **114** are not limited to the example illustrated in FIG. **1**, and may be placed in other locations on the display component **102** and/or base **104**, as would be recognized by those skilled in the art. The display component **102** may also include cushions **118** that provide soft contact points between the base **104** and the display component **102** when the portable computer is closed. In one example, the cushions **118** are made of rubber. However, it is to be appreciated that the invention is not so limited, and the cushions **118** may comprise materials other than rubber, including, for example, a polymer, felt, or other suitable materials as would be recognized by those skilled in the art.

Referring to FIG. **4**, there is illustrated an example of the portable computer **100** configured into the easel mode. To convert the portable computer **100** from the laptop mode (or closed position) into the easel mode, the display component **102** may be folded away from the base **104**, in the same direction as to open the computer (i.e., to configure the computer from the closed position into the laptop mode) such that the base **104** and the display component **102** form an inverted "V" shape with the bottom of the base and the back of the display component face another, as illustrated in FIG. **4**. In the easel mode, the display screen **110** is visible and accessible on one side of the portable computer **100** and the keyboard **106** (not shown in FIG. **4**) is visible and accessible on the other side.

As illustrated in FIG. **4**, in one embodiment, the portable computer may comprise integrated hardware volume controls, including a volume control button **294** and a mute button **296**. In one example, the volume control button **294** may be a rocker switch that allows a user to easily increase or decrease the volume of audio played through the speakers **128**. When the user presses the volume control button **294**, a volume indicator may temporarily appear on the display screen **110**, to provide a visual indication of the amount by which the volume is being increased or decreased. Similarly, pressing the mute button **296** may cause a visual indication that the volume is muted to appear on the display screen **110**.

According to one embodiment, when the portable computer **100** is configured into the easel mode, the visual display on the display screen **110** is automatically rotated 180 degrees such that the information appears "right-way-up," even through the display screen is upside-down compared to when the portable computer is in the laptop mode. Thus, a user may simply "flip" the portable computer **100** into the easel mode and immediately be able to comfortably view information on the display screen **110**, without having to access display screen controls to adjust the orientation of the visual display. In one embodiment, the portable computer **100** includes an orientation (or mode) sensor that is configured to detect whether the portable computer is in the laptop mode or the easel mode, and to adjust the display accordingly. The orientation sensor may be incorporated into the base component **104**, for example, underneath the keyboard **106**, or into the display component. In one example, locating the orientation sensor in the display component **102**, rather than the base **104**, may provide more robust detection and therefore, may be presently preferred in some embodiments. The orientation sensor may be used to determine a precise relative orientation of the base component **104** with respect to the display component **102**, or vice versa, for example, to determine whether the device is in the laptop mode, easel mode, or some point in between the two modes. In one example, the orientation sensor includes an accelerometer whose output is fed to the computer operating system (or to dedicated logic circuitry) which then triggers a display inversion as appropriate.

According to one embodiment an accelerometer is used to detect a configuration of the portable computer, although, it is to be appreciated that other sensors and devices may be used to determine a configuration. According to another embodiment, the portable computer may include integrated "navigation" hardware that allows a user to easily and comfortably control various features and functions of the portable computer, to manipulate content displayed on the portable computer, and to interact with visual representations of content display in a user interface. For example, as discussed above, the portable computer **100** may comprise a scroll wheel **132** that allows a user to control, adjust and/or select various functionality of the portable computer. According to another embodiment, the scroll wheel **132** may be used to provide "hardware navigation" through information, such as menus, icons, etc., displayed on the display screen **110**, as discussed further below with reference to FIG. **17**. A common display configuration used in conventional computers is a "desktop" view in which multiple icons representing links to various programs or applications are displayed over a background image. Navigation may be conventionally performed using a mouse, touch pad or trackball, as known to those skilled in the art.

According to another embodiment, the portable computer **100** includes a streamlined graphical user interface that supports "map" navigation. The map user interface provides a clear overview of the entire computing environment and searching capability within the environment that may be accessed using the scroll wheel **132** and, optionally, one or navigation buttons **166**, **168** that may be provided on the base **104** of the portable computer **100** (button **166**) and/or in the keyboard **106** (button **168**), illustrated in FIG. **17**. In one embodiment, the map mode of navigation is a hierarchical mode that reduces the number of items to select amongst at any stage of navigation, thereby facilitating user access with the scroll wheel **132** and, optionally, the navigation button(s) **166**, **168**. Of course, it is to be appreciated that the map user interface may also be navigated using conventional tools, such as a trackball, touchpad, mouse or arrow keys.

Referring to FIG. **11**, there is illustrated a block diagram of one example of an architecture of the portable computer including a map user interface. The user interface "home" screen **170** that displays a plurality of modes of content **172**. In the illustrated example, the home screen **170** contains five modes of content **172**; however, it is to be appreciated that the home screen may include more or fewer than five modes of content and that the modes of content may differ from the examples discussed below. According to one example, the modes of content **172** accessible via the home screen **170** may include "media" **172***a*, "connect" **172***b*, "web" **172***c*, "applications" **172***d*, and "channels" **172***e*. Using the map user interface, information, programs, features and applications may be grouped into the various modes of content **172**. By selecting any mode of content **172**, for example, by using the scroll wheel **132** and/or navigation buttons **166**, **168**, as discussed further below, the user may access the content organized within that mode.

For example, the media mode **172***a* may provide access to a media player to play, view, search and organize media such as music, video, photos, etc. The connect mode **172***b* may

provide access to features such as, for example, email, voice-over-IP, instant messaging, etc., and the web mode **172***c* may provide access to internet browsing and searching. The application mode **172***d* may provide access to, for example, computer applications or programs, such as word processor, spreadsheet, calculator, etc. In one example, these applications or programs may be provided as web-based services rather than programs or applications residing on the portable computer **100**. The channels mode **172***e* may provide access to different functionality of the portable computer, with the different functions or features defined as different channels. For example, a channel may include an alarm clock channel in which the portable computer is configured to display a clock and can be programmed to activate an alarm, e.g., a sound, piece of music, etc., at a predetermined time. Another example of a channel may include a "photo frame" channel in which the portable computer may be configured to display a pre-selected image or set of images, etc. Another example of a channel is a "television" channel, in which the portable computer is configured to stream Internet television. In one example, a user may configure particular Internet television channels (e.g., a news channel, a movie channel, a home and garden channel, etc.) into sub-channels within the channels mode of content **172**(*e*). Some or all of the modes of content **172** may access, retrieve and/or store information on the Internet **174**.

Typically streamlined devices are integrated with remote content storage and/or access, shown at **174**. The integration may be provided through third party service providers, in one example photo service FLICKR is integrated with various aspects of the device and/or the device's user interface to provide seamless access to photo content stored by the third party provider. The integration with remote storage services permits reduced storage capacity on the user device, for example, a portable computer. Other services may be integrated including for example GOGGLE DOCS, for word processing and other office related applications provided online. Reducing and/or eliminating the need for non volatile memory in the computer system is advantageous in that the device itself may be reduced in complexity and any associated cost. In some embodiments, a streamlined device does not incorporate a hard disk drive for storage, providing for any local storage requirement through RAM and Flash memory.

According to one embodiment, the different modes of content **172** may be displayed as a series of bars across the display screen **110**, as illustrated in FIG. **12**. The following discussion of various features, including hardware navigation through the map user interface may refer primarily to the display configuration illustrated in FIG. **12**. However, it is to be appreciated that the invention is not so limited, and the modes of content may be displayed in other configurations, including, for example, a "desktop" and icon configuration, a "dashboard" type display, as illustrated in FIG. **13**, or another configuration, as would be recognized by those skilled in the art. Similarly, navigation is discussed below primarily with reference to the scroll wheel **132** and navigation buttons **166**, **168**; however, it is to be appreciated that navigation may also be accomplished using any of the conventional tools discussed above or known to those skilled in the art.

As discussed above, according to one embodiment, the scroll wheel **132** and, optionally, the navigation buttons **166**, **168** may be used to navigate the user interface. Referring again to FIG. **12**, scrolling the scroll wheel may sequentially highlight different ones of the modes of content **172**. In one example, the highlighting may be achieved by changing the color of the selected mode, and/or by providing a visual indicator, such as a colored bar **176**. A highlighted mode **172** may be selected by pressing the scroll wheel, thereby bringing up a new "page" or screen on the user interface corresponding to the selected mode. Once within a selected mode of content **172**, the scroll wheel may similarly be used to select particular functions, features or applications within that mode. In one embodiment, the default action for the scroll wheel **132** may vary depending on whether the portable computer **100** is in the laptop mode or the easel mode. For example, in easel mode, the default action for the scroll wheel may be channel selection within the channels mode **172**(*e*). In one embodiment, the scroll wheel **132** may be depressible as well as scrollable. Thus, pressing the scroll wheel **132**, as illustrated in FIG. **4**, may allow further control, such as, for example, selecting a channel onto which the user has scrolled, or "play" and "pause" of audio or video being played through the portable computer **100**.

As discussed above, according to one embodiment, one or more navigation buttons may be used in conjunction with the scroll wheel. In particular, in one embodiment, the navigation button(s) may be used to change the action of the scroll wheel. As discussed above, in one example, the default action of the scroll wheel is volume control. This action may be changed by pressing the navigation button **166**, as illustrated in FIG. **4**, for example, from volume control to menu navigation in the user interface, and vice versa.

According to one embodiment, the effect of pressing the navigation button **166** may vary depending on active the mode of content of the portable computer **100**. For example, if a user is in the media mode using a photo viewing application, pressing the navigation button **166** may change the action of the scroll wheel **132** from mode navigation to slide-show controls for the photos. When the navigation button **166** is pressed, an control indicator box (similar to the volume indicator box **162** discussed above with reference to FIG. **14**) may appear containing different actions for the photo slide-show, such as "play," "next," "back," "skip," "full screen view," etc., and scrolling the scroll wheel **132** may allow a user to select one of these actions. Pressing the navigation button **166** again may return the scroll wheel action to menu navigation, to allow the user to, for example, move to a different feature or application within the active mode, or to select a different mode.

As can be seen in FIG. **4**, the navigation button **166** may be easily accessed when the portable computer **100** is in the easel mode, providing a convenient navigation tool for this configuration. A similar navigation button **168** may be provided on the keyboard **106**, as illustrated in FIG. **17**. In one example, the functionality of the two navigation buttons **166**, **168** may be the same, with the different locations providing easy, comfortable access in the different configuration modes (i.e., laptop or easel) of the portable computer **100**. Thus, a user may use either navigation button **166** or navigation button **168**, depending on personal preference. In another example, the two navigation buttons may have different functionality. For example, the navigation button **166** may be used to alter the action of the scroll wheel **132**, as discussed above, while the navigation button **168** is used to navigate "up" or "down" a level within the map user interface. For example, pressing the navigation button **168** while within a given mode of content may allow the user to "back up" to the home screen; or pressing the navigation button **168** while within a selected channel (in the channel mode of the content **172***e*) may allow the user to "back-up" to the channel mode main page.

It is to be appreciated that numerous variations on the functionality of the navigation buttons **166**, **168** is possible, as would be recognized by those skilled in the art, and the above

examples are given for illustration only and are not intended to be limiting. In addition, any functions described with reference to one navigation button (**166** or **168**) may be instead (or additionally) implemented with the other navigation button. In one example, the function of the navigation buttons **166**, **168** may vary depending on whether the portable computer **100** is configured into the laptop mode or the easel mode. For example, only the navigation button **166** may be active in the easel mode, and only the navigation button **168** may be active in the laptop mode. Alternatively, both navigation buttons **166**, **168** may be usable in either the laptop mode or the easel mode, but their functionality may vary. For example, when the portable computer **100** is in the easel mode, the default action for the navigation button **166** may be channel selection whereas the default action for the navigation button **168** is to access the "home" screen. Furthermore, the portable computer **100** is not limited to the use of two navigation buttons and may instead comprise only a single navigation button or more than two navigation buttons, any of which may be disposed in the locations described above (e.g., on the rounded portion **120** of the base **104** or on the keyboard **106**), or in other locations on the portable computer.

As discussed above, according to one embodiment, the function or display content and/or display orientation of the portable computer may vary when the portable computer is configured from the laptop mode into the easel mode, or vice versa. For example, as discussed above, when the portable computer **100** is configured into the easel mode, the visual display on the display screen **110** is automatically rotated 180 degrees such that the information appears "right-way-up," even through the display screen is upside-down compared to when the portable computer is in the laptop mode. In another example, for at least some activities within at least some modes of content (e.g., viewing a photograph or video), when the portable computer **100** is configured into the easel mode, the display may automatically adjust to "full screen view" (i.e., the displayed image or video is displayed on the full screen size, rather than in a window) to allow for comfortable viewing.

In addition, as discussed above, the ability to configure the portable computer **100** into either the laptop mode or the easel mode provides enhanced functionality. For example, when the portable computer **100** is not being actively used, the user may configure the portable computer into the easel mode, and program the portable computer to act as a digital photo frame, displaying one or more photos of the user's choice. In the easel mode, the portable computer **100** may occupy a smaller footprint on a surface than in the laptop or closed modes because the base **104** and display component **102** are upright, as illustrated in FIGS. **4** and **5**. In addition, because the portable computer can act as a passive information and/or entertainment device, such as a photo frame or clock, as discussed above, the portable computer may provide a useful function even when not being actively used by the user, and may do so (in the easel mode) without taking up much surface area.

It is to be appreciated that although the portable computer **100** is often referred to as being in either the laptop mode or easel mode, other modes or configurations are also possible. For example, as discussed above, because the portable computer **100** can be configured from the closed position, through the laptop mode into the easel mode by rotating the display component **102**, a number of configurations are possible in between "true" laptop mode and "true" easel mode. Each different configuration may invoke different functionality and provide a user with a different aspect of a graphical user interface.

In another example, the portable computer **100** may be configured into a "frame" mode, as illustrated in FIG. **26**, in which the portable computer is placed on a surface **212** with the keyboard **106** "face down" on the surface **212** and the display **110** facing upward. In the frame mode, the display component **102** may be at a similar orientation, and angle **134**, with respect to the base component **104** as in the easel mode. However, rather than the base component **104** and display component **102** being oriented vertically with respect to the surface **212**, as in the easel mode (in which the portable computer forms an inverted "V" as discussed above), in the frame mode, the base component **104** may lie flat on the surface **212**, as shown in FIG. **26**. In one example, software and/or hardware protection may be provided for the keyboard to prevent keys from being pressed (or to prevent the portable computer from responding to pressed keys) when the portable computer is in the frame mode.

Similarly, referring to FIG. **27**, there is illustrated another configuration of the portable computer **100**, referred to as the "flat" mode. In the flat mode, the display component **102** may be rotated (or opened) to approximately 180 degrees with respect to the base component **104**, such that the base component and display component lay flat on a surface, with the keyboard **106** and display screen **110** exposed, as shown in FIG. **27**. Unlike the easel and frame modes, in which the keyboard may be concealed and not easily accessible, in the flat mode, the keyboard is accessible and usable. In addition, as discussed above, the visual display on the display screen **110** may be automatically rotated to accommodate comfortable viewing of information by persons located in different positions relative to the base component **104** or display component **102**. The visual display on the display screen **110** may also be manually adjusted by a user using, for example, the keyboard **106**, touch pad **108** or mouse (not shown), scroll wheel **132** or navigation buttons (not shown). For example, if a user (located at position A) wishes to display information for a person located opposite the user (at position B), the visual display may be rotated (automatically or manually)180 degrees such that the information appears "right-way-up," to the person at location B, even through the display screen **110** is upside-down for that person. Similarly, in another example, the visual display may be rotated (automatically or manually) 90 degrees such that the information appears "right-way-up," for a person at location C. In one example, a user can "toggle" the visual display among various orientations. For example, a user at location A may have the visual display facing themselves while using the keyboard **106** or other controls to change or access information on the display, then toggle the display orientation 180 or 90 degrees to display the information for persons at locations B or C.

According to another aspect, system and interface streamlining may be employed with devices of multiple configurations. In some embodiments, multiple configurations include a traditional configuration, for example, a configuration similar to a laptop device, and also include new configurations, for example, an easel mode. Some examples of streamlined devices have the ability to change between traditional configurations and other configurations. The change between configurations may change the I/O profile of the device and hence impact the user's interaction with the device itself and any content displayed on the device. In one embodiment, the user interface is responsive to changes in configuration. In another embodiment, the user interface is responsive to changes in I/O profile.

According to another aspect, the streamlining of the user's multi-media experience incorporates the device the user uses to interact with multi-media sources, whether the sources are

on-line or provided by the device itself. Streamlining of the device includes developing consistent user interfaces for the user to access all features presented. The device's graphical user interface layer is customized to the I/O interfaces provided. In one example a device is provided in the form of a portable computer configurable between a laptop mode (in which the portable computer has a conventional laptop appearance) and an easel mode in which the base of the computer and its display component stand upright forming an inverted "V," a closed mode, a laptop mode, an easel mode, a flat mode and a frame mode. According to one embodiment, each of the display modes may employ different I/O profiles.

Some of the aspects may be better understood through the use of examples demonstrating the interactions between a system, the system user, the interfaces provided, and the accessed content. The user experience is improved through simplification of the interactions with the user device—depending on the device's configuration the only activity required by the user may be to use a scroll wheel to identify selection and a button to execute the selection. Moreover, the user experience is enhanced by permitting the user to select the I/O profile s/he is most comfortable with and even select multiple I/O profiles or device configurations depending upon the context presented to the user. It is to be appreciated that adaptations to the user interface layer that maintain consistency while permitting different I/O profiles should be viewed as part of the invention.

The examples of user interactions are provided for the purposes of illustration and should not be viewed as limiting the invention to the interactions described, nor the specific presentations discussed, and it is to be appreciated that other interactions are appropriate and even desired in different circumstances. Additionally, different configurations of the device itself will provide for different user interactions, for example, based on additional hardware not available in another configuration.

Examples of User Experience

In one example, some typical user interactions with electronic content are illustrated. The user interactions occur in accordance with various aspects of the systems and methods for streamlining user interaction with electronic content. In some embodiments, the streamlined device is adapted to accommodate multiple users. In one embodiment, the user identifies him/herself to the device by entering a user name and password. Once the user name and password is accepted the user may begin interacting with the device, and if desired through the device to other content. According to another embodiment, the device may display a "users" screen, incorporating a visual representation for each user. In response to selection by the user of the visual representation the user is identified. Identification may optionally include a password challenge/response after selection of the visual representation. In some embodiments, a camera is available through the user device, and the user's visual representation may be generated by taking a snapshot of the user.

In one embodiment, that act of identifying includes access to remote storage associated with the device and/or the user. Remote storage is accessed to retrieve any global profiles that may exist for the user, and more specifically, any changes that may have been made to the user's global profile. In some embodiments, a local copy of any profile is stored on the device, and the remotely stored profile is used to identify any changes. Changes to profiles may be copied to the remote location or changes in the profile may be retrieved from the remote location. In one example, the local and remote profiles are associated with a revision date. The most recently revised profile may be used as the most up to date profile, with a different version receiving modification as necessary to correspond.

In one alternative, a remote profile may be maintained for the device itself. In another, the device profile may contain information on a number of users. In some embodiments, remote access is used to retrieve configurations and/or settings maintained for any of the device, the user, and groups of users, alone or in combination. According to one aspect, remote storage and/or remote access to user configuration comprises one element of an example system for streamlining user interaction with electronic content.

Once a user is identified (identification may occur by default if only one user has accessed a particular device) the graphical user interface presents a default view of the electronic content available on the device. In one embodiment, the view presented is responsive to the configuration of the device. According to some embodiments, device configurations may be determined using a sensor embedded in the device. In one example, a sensor is used to provide a signal and from the signal the device's orientation is determined. Alternative methodologies are employed in other embodiments for detecting and determining a device's configuration. In one alternative example I/O devices may be enabled/disabled based on the physical configuration of the device. For example, during a transition from laptop mode to easel mode, various I/O devices that become inaccessible may be deactivated. Determining what I/O devices are still active and/or available permits identification of the device's configuration. In other embodiments, an accelerometer may be used to detect a device configuration. In one example, a device may be a portable laptop computer. The portable laptop computer may have multiple configurations, including a laptop mode, an easel mode, a frame mode, a flat mode and a closed mode.

In the illustrated example, FIG. **1**, the user device is configured in a laptop mode, and has an I/O profile (a set of **110** devices) that one would normally associate with a laptop computer. In this example, the **110** profile includes, in some embodiments, a keyboard, a touch pad, buttons, web cam, and a scroll wheel. The graphical user interface is configured to present a default view that provides the user with contextual options. n this example the present context for the user includes "lean forward" viewing and the computer operations one would typically associate with user of a laptop, Other contexts arise based on configuration of the device (for example in Easel mode) and the computer tasks the user wishes to perform. For an identified context a default is provided for the user eliminating the requirement of making configuration choices, however, the user is still permitted to access the configuration directly to customize it.

Shown in FIG. **2** is an example of a page of the device's home view (**200**). The home view organizes user interface elements into a mapped based presentation and separates the presentation into logical units based on a single displayed screen, i.e. a page. One function provided by the home view is to serve as an organization of interface elements and/or navigation tools that maps visual representations of available content into a plurality of views of the available content. The home view is also configured to present summarized views of information to the user, so as to reduce the volume of information that a user needs to process in order to access content. In some embodiments, the mapped based interface is also configured to group like computer operations into a section of the map. Typically, grouped selectable computer content includes mappings to other groupings of lower level functionality. For example, high level navigation options are, typically, first presented to the user. The high level navigation

options provide a summarized view of the available content, making content based selections easy to appreciate and accomplish. A user selects a high level navigation operation to navigate to more detailed operations. In some embodiments, the more detailed operations are grouped based on a mode of content. Modes of content may include for example, media, channel, connection, application, and web, among other options.

According to one embodiment, high level functions and low level functions are segregated based on proximity to displays of sources of digital content. For example, a visual representation that maps to the source of digital content is included in a lower level of functionality than the view that organizes the presentation of the visual representation. A view that presents the digital content source itself, is grouped at a lower level than the visual representation that maps to the digital content source. In another embodiment, interfaces that provide navigation operations to digital content form a layer of the graphical user interface, and interfaces that provide interaction options to digital content form a lower layer. In one embodiment, the home view includes maximal display thresholds configured to improve the ability of the user to absorb the information presented. In some embodiments, a maximal number of visual representations per screen is set. In one example, the maximal number of visual representations is used to define a GUI page. In another example, the maximal number of visual representations is associated with a maximal number of full view visual representations, and the page is configured to include portions of views of other visual representations available on adjacent pages. A computer operation that would cause the computer device to exceed the maximal number results in the creation of a new display page. The home view is organized into as many pages are required in order to maintain the maximal threshold of display items.

Typically, the home view is configurable by the user. New items may be added, existing items may be moved and/or removed based on user selection. The home view further comprises some visual representations that can not be removed. Commonly requested system operations have visual representation displayed on the home view that can not be deleted. According to one embodiment, a user may reorganize the display but not remove system operations. For example, visual representations that map to system operations (e.g. communication configuration and hardware configuration) cannot be removed from the home view. Additionally, some system operations will always be displayed through the home view regardless of frequency of use. Positioning of a visual representation is also organized and managed in the home view. Preferably, organization and/or management occurs automatically based on default settings selected for the user. Alternatively, organization and/or management may occur dynamically. For example, a user may make changes to organization and/or management settings on the fly. In another embodiment, default settings control organization and/or management, and an interface is provided to permit a user to make any changes to the default settings, And in another embodiment, a user may be queried on preferences, the responses are used to establish defaults for operation.

In some embodiments, frequency of use of the visual representations is used to sort the presentation of visual representations on the home view. More frequently accessed visual representations are displayed at a higher position on a page and less frequently accessed representations are displayed at a lower position on the page, and may cause the computer device to display the visual representation on another page.

In a typically configuration, visual representations are organized based upon creation time, although certain visual representations take precedence in the display. According to one aspect, display precedence is established from left to right and from top to bottom. In one embodiment, the visual representation displayed in the upper left portion of the display screen is associated with the highest precedence. Precedence in the display may be influenced and even ignored with respect to certain system operations and the visual representations that map to them. For example, a visual representation mapping to display for a user's bookmarks may appear in the upper left corner. According to one embodiment, the positioning of the familiar option relating to bookmarks as the visual representation of the highest precedence provides users with an option familiar to traditional use of computer systems. Although presented as a streamlined interface element, the bookmark visual representation is configured to evoke familiarity in the typical computer user.

According to another embodiment, the visual representation that maps to the computer functionality for creating interacting with a new web page is the only representation that has a fixed position, relative to the display precedence. In one example, the element for triggering interaction with a new web page is always display in the bottom right corner. The other visual representation may be reshuffled based on frequency of use, and in other embodiments a user may also reshuffle the visual representation by drag and drop procedures, however the element for triggering interaction with a new web page remains in the bottom right corner, and in one example, will move to a new page in response to a request to display an new web page element when the element is already displayed in the bottom right corner of a page. Drag and drop operations may be associated with a drag threshold. In one example, a drag threshold is applied to require a small movement of the identified card before the device executes the drag operation. The drag threshold may be measure on the order of pixels, and may be any number of pixels that prevent accidental dragging in response to the user attempting to click on a card. In one embodiment, the drag threshold is set to 5 pixels. Other thresholds may be used, 2, 3, 4, 6, . . . pixels as examples.

Other display precedence may be employed. For example, display precedence may be configured based on user location and language convention for the user location. The written English language is read from left to right and from top to bottom; however, other languages are not. According to some embodiments, display precedence and any corresponding animations are configured to correspond with the conventions of the local language, for example displaying from right to left.

Referring again to FIG. **2**, shown is an example of a page of the home view, with user interface elements organized to present the user with summary information of available content. Shown in FIG. **2**, at **202**, is a representation of picture and video content available to the user. At **204**, a visual representation of customized content is available. The customized content (discussed further herein) comprises rss items from a web location distributing via an rss feed. In example shown, **204**, comprises a channel card. The channel card is configured to allow easy interaction with a plurality of rss items, and further configured to be responsive to both lean forward interactions and lean backward modes of interaction. The other user interface elements include, for example, visual representations of web based content, specialized user interface elements for providing customized interaction with web based content in the form of channels, and system elements.

A typical activity for any user includes reading his/her email. The user may observe an e-mail from for example, the user's credit card company, Chase. The home view (**200**) is the default vehicle through which a user interacts with the device and with electronic content displayed on the device. The home view presents an organization of other interactive elements (**202-216**). Accessing e-mail occurs in response to selecting the visual representation (**208**) that maps to YAHOO! MAIL content. Upon selecting (**208**) the device executes a mapping from the visual representation to the content and in response the device presents a first view of the mapped content. According to one embodiment, in response to selection of a visual representation mapping to content of web page a web page view is displayed. The web page view is a zoomed in expression of the web based content mapped by the visual representation.

Once a user aches the web page view (**300**) FIG. **3**A, the user may interact with the content shown. Although it is to be appreciated that other representations may mapped to different views, and different views may be used to map to further views. (**302**) shows an e-mail being reviewed by the user, and more specifically an e-mail from Chase Bank indicating that the user's credit card statement has issued. The body of the e-mail (**304**) includes a link (**306**) for accessing Chase's website. Selecting the link invokes an open new page view operation by default, and in response to selection of (**306**) the user sees an animation returning the user to the home view (**200**). The visual representation for "Browse the web" (**214**) reveals the creation of a new visual representation for accessing web content (**216**) by sliding away from a new visual representation takes the former place of (**214**). The computer system displays an animation that shows the computer display zooming into the page view (**300**) of element (**214**), shown in FIG. **3**B. The user logs in and reviews his/her balance, shown in FIG.**3**C at (**350**). The web page view further comprises navigation element (**352**). The user selects (**352**) to return the home view (**200**), selects (**216**) to access a new web page and in response a new web content visual representation is created, further the device shows the display zooming into the new content.

FIG. **5** displays a quick access view (**500**). As the new card has not yet been mapped to content, the device displays content options in order to generate a mapping. In one example, the content options may be based on frequency of access. Shown at (**502**) are visual representations generated from the most frequently visited content. Selecting any of the visual representations in the body (**502**) causes the device to associate the mapping with the new card and zoom into the selected content display. At (**504**) provided as an element of the view's header (**506**) is a bookmarks control. Through (**504**) bookmarks control a user may access content not display in the frequency list (although a user may also enter a uniform resource identifier at (**508**).

In response to the selection of bookmarks a list of bookmarked content is displayed for selection, FIG. **6**, **600**. Upon selecting (**602**) a mapping to the bookmarked content is associated with the new visual representation. In one alternative, a user may enter a uri for a online source to associated with a new visual representation. The computer zooms into the selected content and in this example, displays the web page view for (**602**), Bank of Anmerica's (BOA) web site, shown in FIG. **7**A at (**700**). The user logs in at (**702**) and is able to pay the Chase bill just reviewed, shown at FIG. **7**B, (**700**). Having visual representations mapped to content available, improves the user's ability to transition between content views. By selecting the navigation element (**752**) the user is returned to the home view, FIG. **8**, (**800**), showing the visual representation (**802**) mapped to Chase's web page content and the newly created visual representation (**804**) mapped to Bank of America's web site content. Selecting (**802**) returns the user to the Chase content with the user's state preserved from the last visit, FIG. **3**C, (**350**). The user is able to immediately review the statement balance, and by selecting navigation element (**352**) return to the home view (**800**) select (**804**) and enter the amount due for the Chase credit card at (**754**).

It is to be appreciated that visual representations mapped to computer content facilitate transitions between content, and further by providing state preserving representations a user is able to quickly retrieve and employ information learned from content.

According to another aspect, the selection of a new visual representation is configured to employ a timer. According to some embodiments, the timer is configurable based on user selection, so that the animation may take longer, shorter, and in some embodiments the user is permitted to disable the animation entirely—in one example this is accomplished by setting the timer to allow 0 seconds for the animation, in another example the animation is simply disabled. In some embodiments, the timer is configurable by the system. Over the course of use, the allotted time may be reduced by the system automatically. Once a user has reached a certain time on the streamlined device, the animation may be automatically disabled by the system. For some embodiments where the timer may be configured based on time of use, different timers may be employed for different user profiles. Thus an experienced user may no longer see the animation, whereas a novice user on the same device would see an extended version of the animation.

Graphical User Interface

Referring again to FIG. **11**, there is illustrated a block diagram of one example of an architecture of the portable computer including a map user interface. The user interface "home" screen **170** that displays a plurality of modes of content **172**. In the illustrated example, the home screen **170** contains five modes of content **172**; however, it is to be appreciated that the home screen may include more or fewer than five modes of content and that the modes of content may differ from the examples discussed. It should also be appreciated that different architectures may be invoked in response to different device modes. For example, a portable computer in laptop mode may display a home view as discussed with respect to FIG. **11**, when configured in Easel mode, user is presented with a Channel View. Shown with respect to FIG. **23** is an example of a portable computer set in Easel mode, displaying a channel view. The Channel view may also display a plurality of modes of content. In FIG. **23** shown are visual representations of content (**2304-2308**) with associated mappings.

According to another aspect, streamlining the presentation and integration of features and services includes simplifying the I/O devices that a user needs to operate in order to access features of the computer system and the features of any available service. According to another aspect, streamlining includes developing consistent visual representations of available content (whether on the computer system itself or from service providers). In another aspect, the organization of interactive elements and responsiveness of the organization to navigation options, device configurations, and user preferences improves the user's ability to interact with the computer system and its content. In one embodiment, system features and web features are consistently presented as cards for the user to interact with to achieve their computer objectives. In some embodiments, cards comprise part of an interface layer between a computer user and a user's computer based objec-

tive and/or computer operation. In some embodiments, the number and type of cards are presented in as few as three classes and/or types. Each card for example may be similar in aspect to the other, but each performing a different class of function on the computer system.

Referring to FIG. **9**, shown is a conceptual model **900** of an example graphical user interface. As shown, in FIG. **9**, through a streamlined device **901** a user will interact will a number of views of computer based content. In example model **900**, depending on the device's configuration a user will be presented a home view **912** or a channel card view **914**. Conceptually **910** forms a layer of the mapped based user interface, wherein the layer is configured to organize, manage and display streamlined views to the device's user. Layer **910** organizes, manages and displays objects of layer **920**. Layer **920**, according to some embodiments includes cards **921** which are selectable visual representations that are mapped either to computer functions or available computer content. Cards further comprise web cards **922**, that map to views of web content including web pages; channel cards **924** that map to customized views of content including web based content and picture and video content; nascent cards **926** that map to system functionality; system cards **928** that map to system functionality; and shared cards **929** that can be any of the former discussed cards shared from another user and/or streamlined device. The card layer **920** maps either to computer functionality executed upon selection or additional views to provide interactive displays to the device' user, for example, the views illustrated in layer **930**. Page view **932**, according to one example, is a zoomed in expression of a web page. At **940** shown is another layer which includes a screen saver view, **942**. In one embodiment, the screen saver view is a passive view. In one example, the screen saver view may be activated by the computer system remaining idle for a period of time. In one embodiment, the screen saver view displays content from channel cards designated by a user in an options menu. In another embodiment, the screen saver view displays content from a pictures and video card. In another embodiment, the screen saver view displays content from a shared card.

According to one embodiment, channel card view **914** comprises a view of the channel cards that are available to a user, and in another embodiment includes a channel selector (not shown). The channel selector is a selectable display configured to be responsive to manipulation of a scroll wheel. In one example, the channel selector is configured to display a rolodex of available channel cards and manipulation of a scroll wheel flips through the visual rolodex. Selection of one of the channel cards invokes any of a channel page view **934**, content menu, and a channel card full view, depending upon the device's configuration, and in some examples the result is responsive to where on the card a selection was made. Various cards, depending on the content mapped to, may also provide other views for rendering and providing for user interaction with content, for example, time, **939**, album, **936**, and lens, **938** views. It is to be appreciated that the conceptual model illustrated in FIG. **9** is only one example of a conceptual model of the graphical user interface for streamlining user interaction with electronic content. Other conceptual models may be employed, for example only some of the layers may be employed, additional layers may be used, and different segmentations of the layers may be provided.

According to one embodiment, a method of presenting a streamlined graphical user interface for a streamlined device includes an example process **5000**, FIG. **50**. Process **5000** provides for organizing a plurality of views and GUI elements into a consistent presentation for user interaction. At **5002** provided is a first visual representation for displaying multiple content modes mapped to a view of computer content. At **5004**, a plurality of visual representations are organized by type of computer operation. At **5006**, the graphical user interface presents higher level operations to users as a view including a group of visual representations. AT **5008**, a user is permitted to select from the group of visual representations to navigate to lower level functions provided by different views of computer content. At optional step **5010**, a user may be permitted to select from within different groups of visual representations to navigate to further lower level views of computer content.

According to another aspect, layers of the conceptual model are configured to respond to device configurations by defaulting and/or transitioning to different views based on device configuration. Typically a device configured in a laptop mode displays a home view, **912**, to a user as the default view. In response to a transition in mode between laptop and easel the computer transitions the computer display from the home view, **912**, to the channel view, **914**, as the default. A user may elect to change the default view, for example by selecting a navigation button that executes a return to the home view. In one example, **168**, FIG. **17**, is configured to return a user to a home view in response to selection of **168**, when the computer display is not on the home view. In the home view, a user may invoke a channel card view, **914**, by manipulating scroll wheel, **132**.

Home View Embodiments

Referring again to FIG. **2**, shown is an example page of a home view, **200**. Home views according to various embodiments are configured to render consistent organization of elements of the graphical user interface. Each page rendered in home view comprises a home navigation tool **250**, a header **252**, and a web search box **254**. For home views which include multiple pages, a hint or cut out of adjacent displays are rendered at **256**, for example. Hint or cut outs of adjacent displays may also occur at the bottom of the display screen, the top of the display screen, and both top and bottom, where multiple adjacent pages are present. **250**, home navigation tool is responsive to the context in which it is executed. For example, the home navigation tool, **250**, when selected causes the computer to display the last accessed view before the computer displayed the home view. Where a user navigates to the home view, **200**, from a web page view, the selection of the home navigation tool **250** caused the computer to display the previous web page view. In other examples, the home navigation tool permits, toggling between other views and the home view, as illustrated in FIG. **9**, at **932-939** and/or **914**.

According to some embodiments, the web page view includes a navigation tool, **350**, FIG. **3**C, and in response to selection, causes the computer to display the home view, **200**. Other elements included in the home view, for example, header **252** are configured to provide consistency in the home view across pages and in some embodiments across the user interface. Each page of the home view, **200**, further comprises a body, **258**, in which cards **202-216** are displayed. The body is associated with a maximal display threshold. The maximal display threshold governs the number of GUI elements displayed per home view page. In one embodiment, the displayed elements may comprise cards, and the maximal display threshold is set to display twelve cards. In addition to the maximal number of displayed elements, the home view may also comprise indicators of adjacent content at **256**. The device generates a new page display for the home view, **2000**, in response to exceeding the maximal display threshold.

Home view **200** is the default view in laptop mode, and may be implemented as the default view in other device modes (e.g. frame, easel, flat modes). According to some embodiments, the home view is the primary mechanism for permitting users to access cards and navigation through content viewed on the device. In the home view a user can access open web sessions, view and manage their channels, initiate new web sessions, and launch other activities.

Cards, e.g. **202-216**, form a plurality of types. Some card types are organized by function, some by content. The home view is comprised of various cards, each card providing access to computer based content. According to one aspect, cards can be thought of as the building blocks of the user interface, providing access to a plurality of views and/or content. Indeed, cards as elements of the GUI, are configured to be shared across users and across other streamlined devices. The ability to employ the features and functions of card based elements may be limited to streamlined devices, although cards and settings may be shared with traditional devices.

Shown in home view **200**, are web cards **206**, **208**, and **216**, channel cards **204**, and **210**, further shown in home view **200** are special system cards that map to content and system operations, for example bookmark card **212**. The bookmark card **212** is configured to provide traditional computer operations associated with conventional systems and browsing methods. The bookmark card serves as learning tool, to provide features with which user are familiar in a new format that encourages further integration of card based interactions. According to one aspect, card interfaces are generated by a user for each web based interaction, eliminating the need for convention navigation in the form of bookmarks. Another example of a system card appears at **214**. **214** maps to functionality that when selected causes the computer system to execute a web card generation process. FIG. **10** illustrates an example generation process, **1000**. Example processes, **1000**, begins at **1002**, in response to selection of a card or embedded web link (e.g. **214** of FIG. **2**) that is associated with a mapping to functionality that generates a new web card. For example process **1000**, may be initiated from a page view of a web card in response to selection of link. According to one embodiment, the behavior of the streamlined device depends on instruction embedded within a selected link. In particular, the device in response to selection of a navigation link navigates to the identified location in the same page view. If the link encodes an instruction for open in new window and/or open in new tab, the device in response to selection generates a new card and displays the page view of the new card. Alternatively, defaults may be established for link handling, including a default for selection of a link contained inside an e-mail, which may default to a "new card" mapping, whereas in some embodiments, links directed to the same domain as the current view default to navigation functionality within the same window. In other words, in response to a selection of a link within a certain web-page, directing navigation to another location with in the same web page, the default functionality executed, caused the device to navigate to the selected location within the same window.

According to another embodiment, handling of web links may also be governed entirely by the settings contained in the selected link. For example, the device may execute process **1000** in response to execution of a link including the instruction to open in new window. The device may also execute process **1000** in response to execution of a link including an instruction to open in a new tab. In one embodiment, links without such references are processed by the web page view navigating to the linked location without invoking process **1000**, for example.

At **1002**, the mapping is executed and the computer device determines its state at **1004**. The state determination is configured to identify a current view setting for the device. Current view setting may be limited to an indication that the device is current showing the home view. At **1006** Yes, the device is currently showing the home view, and the device executes a card generation animation, at **1008**. In one example, the animation causes the device to display a browse the web card **214**, FIG. **2**, sliding away from a new visual representation the takes the former place of **214**. One the new card image is shown the computer display renders an animation the causes the user to perceive zooming into the newly created card at **1010**. Alternatively, it is determined that the device's current display is not the home view at **1006** NO. At **1012**, apparent motion relative to the user is rendered by the device to provide the appearing of zooming to the home display. Other animations may be employed to establish for the user the perception of motion to the home view. Once at the home view, process **1000**, proceeds as before.

According to one embodiment, the home view, FIG. **2**. **200**, is configured to manage and organize cards. The home view provides a simple and convenient mode of navigating through the features and content accessible through the device by organizing and managing cards.

Card Examples

According to some embodiments of systems and methods for streamlining user interaction with electronic content, visual representation that render computer operation and/or content in a consistent manner further comprise cards. According to one embodiment, cards may further comprise types, including web cards, which map to active web pages. In some embodiments, device configuration sensitive displays are provided through a graphical user interface. In some embodiments the device configuration sensitive displays include cards. Cards may come in a number of forms. In some embodiments cards may be classified according to the functionality that they provide to a particular user. For example, system cards provide and display computer system functionality that maybe frequently accessed during ordinary computer user and/or may be required for computer use. In some embodiments, web cards provide a user interface for web based content and/or web based activity. In some embodiments, channel cards provide additional features that enable a user to better interact with web based content, and in another example, channel cards provide interactive views by utilizing different content presentations provided by a web source. Consistent user interfaces provide an access layer to system and web based content. Consistent user interfaces are used to access web based content, and even content and applications provided by third parties.

In one example, a web card presents a thumbnail view of the current state of the web page. In another example, the web page card presents a cut out view of the web page based on computer focus within the page at the time the web page view was exited. FIG. **14** illustrates, according to one embodiment, the behavior and rendered display of certain cards responsive to computer focus and selection by a user. A card may be in a number of states based on computer focus. One example of computer focus would include "hover" **1404**—hover indicates the movement of a pointer, typically represented by a white arrow on the computer system display, over a card. A card may be in a normal state **1402** when not in focus.

Focus is intended to include any identification by the computer system of the card, short of execution of the mapping

associated with it. For example, focus should include identification by tabbing through available cards, identification by using hotkeys, among other options that result in computer focus resolving on the card. The terms computer focus and focus should be read to include hovering over a screen element, tool, or other visual representation displayed on a computer system display. In one example, focus follows a displayed pointer, and movement of the pointer with, for example, a mouse causes the computer system to resolve computer focus on the visual object under the pointer display. Selection by a user or a computer system may include focus and visual objects displayed on a computer system display may be selected by moving a displayed pointer. In some embodiments, selection may be accomplished by clicking on a visual object using a pointer displayed on the computer screen. A second "click" may then cause the computer system to execute functionality associated with the visual object. Execution should be read to include initiating an operation associated with a visual object, in one example execution will include clicking on a visual object (single or multiple "clicks"), by positioning a pointer display over the visual object and depressing a button to initiate the operation.

Focus may be resolved on a computer system by analyzing content intended to be displayed before its display on the computer system, additionally focus may be responsive to actions taken on the display through for example pointing devices.

According to one embodiment, when a web card or channel card appears is in a hover state **1404**, additional options are displayed in the card header, for example at **1450**. The additional tools displayed in the card header permit a user to select the options associated with the card. The options view for a card **1406**, displays available selections contained in the options. For a web card **1410**, the options include make a channel **1452**. The selection of make a channel at **1452** causes the device to execute functionality that transforms the web card into a channel card. The transformation from web card to channel card includes transforming the display image of the card element on any corresponding view.

Typically the transformation may only be made for a web card that references a content including a rss feed. The items in the rss feed are configured into a customized presentation—as for example a channel card **1412** (discussed further herein). For a channel card **1412**, additional options include show in screensaver, for example. Other states may impact the display of web card including a drag and drop state. Upon focus, the additional tools will resolve in the header section of the card, the additional tools may be displayed as icons, as shown in FIG. **14**, and may also be rendered as selectable text options include "bookmark," "share," "options," and "close." If a user depresses the button control and does not release, the user may user drag and drop the card within the home view. The card may be dragged across pages of the home view, and the user may reorder the presentation of cards in the home view using multiple drag and drop operations. According to one embodiment, as a card is dragged across the home view, all displaced cards will appear to move into new places.

According to another aspect, computer content and interactive functionality is recast into cards. In one embodiment, the card comprises a visual representation of web content that simplify the user's interaction with even the most sophisticated on-line tools. Cards are configured to present a summarized view of available content and/or present a visual indication of available functions. According to one embodiment, cards form a part of the structure of the graphical user interface between the system and the user. In various embodiments, cards are configured to be context and/or content sensitive. Some cards are configured to be persistent. Persistent card may be removed by an affirmative act of the user.

With cards, content can be easily and visually absorbed by a user. In some embodiments, cards serve to maintain a current state of the user's activity. And in some embodiments, cards also serve to focus the displayed content on contextual information. Cards may be configurable by the users. Configurations options are presented to the user consistently. In some examples, this includes displaying consistent animations designed to draw the user's focus to the particular activity and to provide comfort level for the activity being displayed.

Shown in FIG. **43** is an example process **4300** for streamlining user interactions with computer content. The process includes presenting a consistent look and feel for user access to computer operations and computer content for user interface elements that also provide for a reduction in decision making requirements imposed on a user during conventional computer use. At **4302**, a user is presented with a first visual representation in a computer display, the visual representation is responsive to computer focus and at **4304**, and the user is permitted to resolve computer focus by selecting the visual representation. Selection and focus can be thought of in terms of a visual pointer display on the computer system display, by moving the pointer over an object displayed on the computer display, computer focus may be resolved on the visual object. Alternatively, a user may have to indicate a selection of the object by clicking on a mouse button for example.

According to one embodiment clicking is not required. In another embodiment, the pointer being displayed above a visual object activates a "hover" state. In response to hovering, computer focus is resolved on the visual object. At **4306**, a focus visual representation is displayed to the user. According to one embodiment, the visual representation and the focus representation are configured to have common elements, and in particular, a header and body display for rendering computer content associated with the visual representations. The focus visual representation including a header and body display summarizing at least one of computer content and computer operations are shown at **4308**. The visual representations present a multitude of computer content in a streamlined form, in other words, the visual representation forms an indirection layer of functionality that provides a window into digital content, and/or computer operations linked to the visual representation. In particular, a visual representation mapped to a web page for example, provides a view of the web page in the body of the visual representation and provides additional information about the web page in the header display. The header display may also include tools for providing easy access to computer functionality associated with the web page and/or its content. In one example the header display only displays the tools in the focus visual representation so the initial view of the content is not cluttered with tools that are not needed. Further, in one embodiment, the tools only display in response to focus, in other words, only when a user indicates they are necessary by moving a display pointer over the visual representation. Further computer logic may be embodied in process **4300**, responsive to a display position of a pointer displayed on the computer screen. In response to the display position of the pointer occupying the same location as another visual object, computer focus is resolved on that object, causing the computer system to determine functionality associated with the object.

In one example, the object is a visual representation, and in response to moving the pointer over the visual representation, the computer is caused to display a focus visual representation associated with the visual representation. In one

example, computer focus remains with the focus representation and functionality associated with the focus representation is made available for execution. Other operations including display of a header responsive to focus may be executed. At **4310**, a mapping associated with at least one of the focus visual representation and the visual representation is executed causing the computer system to navigate to a content view. The content view may include a display of computer operations. In one alternative, the content view provides an interactive view of computer content. In one example the computer content, comprises online content viewed through a web browser. In another example, the content view is presented in a similar format as the visual representation used to navigate to the content. In one particular example, the content view includes a header display and a body display, and the content is displayed in the body portion. The header portion provides additional information on the content, for example a title, and may further provide additional tools that are responsive to focus. Again providing tools that resolve when needed and disappear when not reduces the amount of information a computer user needs to assimilate in order to use a computer system.

All computer content and operations can be configured to display in visual representations and respective focus visual representations, providing a user with a streamlined presentation of computer content and operations. According to another example, different content types are presented through visual representation of a similar format. In one embodiment, the visual representations comprise cards as discussed herein.

A process **4400** may be invoked by streamlined computer system as part of process **4300**. Additionally, process **4400** may operate independently or be called from other processes. Shown in FIG. **44** is a process **4400**, for permitting a user to interact with computer content. At **4402**, a computer system displays a first content view. The first content view is configured to display in a similar format as a visual representation selected by the user to navigate to the content view. In one embodiment, the first content view includes a header and body display. In another embodiment the content view is a zoomed in view of the visual representation used to navigate to the content view. At **4404**, an enlarged view of the first visual representation is displayed. In one example, the content view comprises a web browser view of a web page displayed in the body of the content view. The visual representation used to navigate to the content view displays a portion of the web browser in the body of the visual representation. At **4406**, a user is permitted to interact with the content displayed in the body of the content view. The user is further permitting to access options associated with the content through the header display. Optionally, further computer logic may be included in process **4400** for presenting focus and unfocused views of the header in the content view.

According to another aspect, cards types should be clearly defined by color scheme and appearance, while at the same time maintaining a similar format. For example the similar format should include header placement and sizing, display of tools, title and frame size. In one embodiment, a color scheme configured to differentiate card types provides for web cards with white headers with the content displayed on the web card showing as a thumbnail of the current state of the page. Channel cards are configured with black headers, and the content presented in the channel card comprises a simplified representation of web content based on RSS feeds or custom visualizations of some non-RSS websites. Customized visualizations may be pre-loaded on the device for specific websites, or may be provided as part of a remotely stored device profile and/or global profile. Updates to the device profile and/or a global profile would include development of customized visualizations of non-RSS websites, and access to remote storage trigger delivery of the customized visualizations. According to one embodiment, only sites for which RSS or custom visualizations are available can be displayed as channel cards.

System cards are shown either with blue headers or grey headers. System cards may be further classified to include nascent cards. "Browse the Web" card, FIG. **2**, **214** is an example of a nascent card. The nascent card may be configured so it position is not configurable, nor is a user able to remove the card from the home view, or any view. The nascent card maps to functionality necessary to operation of the streamlined device, and thus no option to close and/or remove it is available. Other system cards are configured to represent activities that have been specifically designed such as for example, photos & video card(s). The other system cards map to functionality also regarded as necessary so that the other system cards can not be deleted, however, the other system cards can be reorganized in for example the home view. Functionality mapped to by the other system cards include communications card, for configuring wireless access of the device, bookmarks for presenting conventional styled web page bookmarks, camera for providing for configuration and operation of a camera, either embedded in the device upon construction, or incorporated through for example a USB port.

In one embodiment, a system card is mapped to functionality to provide a user with streamlined access to web bookmarks. In one example, a bookmark card is provided that is always accessible from the home view. As with other system cards, the bookmark card comprises a header and a body. According to one embodiment, the body display for the bookmark card is unique to the bookmark card. Bookmarks are retrieved and displayed in the bookmark card one at a time. In one example, the bookmark card indicates in the body display the number of the bookmark in the list and the total number of bookmarks available.

According to some embodiments, the interactivity of individual cards is limited to navigation to a page view. For example, a user can not change the content of a card by interacting only with the card. In other embodiments, channel cards, for example, provide a user with the option of interacting directly with the card. Upon hover, channel cards presenting news feeds may resolve navigation tools configured to step through individual rss items displayed in the channel card. Additionally, selection within a channel card presenting a news feed causes the device to execute different mappings depending on what part of the channel card was selected for execution. Clicking directly on an rss feed headline for example, caused the device to execute a mapping to the web page view for that article. Selecting the body of the channel card causes the device to execute a mapping to the channel full view. Selection within the channel full view causes the device to display a content menu, responsive to manipulation of a scroll wheel.

In an embodiment employing a three card presentation, the cards that are presented provide the user with the ability to interact with system specific features. System features may be invoked and display using consistent presentation and/or animation. Consistent presentation of like features may engender a comfort level in the user for new features that appear using the same and/or similar presentation. Additionally, where a user invokes features in a similar or consistent manner, access of new features is facilitated and user comfort level may be increased. For example, a nascent card, is a

system card that provides for consistent implementation of user activity and/or a computer objective desired by the user. In one embodiment, the "new card" card is a visual representation of a system placeholder for generation and presentation of new card that a user may create during the course of ordinary activity. By selecting the new card (for example, creating a web card used to interact with web content) a consistent animation may be employed to display to the user the creation of the new web card utilizing the nascent "new card" card. Other system features may be presented through system cards. Typically, system cards will represent functionality used most frequently and/or functionality that should always be available and not subject to removal by a user. Other card types, include web cards that are used to present web content, and channel cards that are used to provide to a user easy and/or consistent access to additional features.

According to another aspect, features of cards may include consistent navigation tools, consistent content display—including limiting the ability to alter content of a card through user interaction with the card, state representative images of content, state and context representative images of content, customized visualization of content, and in some examples customized visualizations include information derived from rss content. In one embodiment, user interactions with cards are also streamlined. In another embodiment, when card configurations and/or card options are selected by a user (if available) a consistent animation is presented to the user. For example, selection of a card's options may cause an animation displaying the flipping of the card and the revelation of user selectable options. Options, for example, may include permitting the content reflected in the card to be displayed as a screen saver. Certain features may only be available for certain cards types. In one embodiment for example only channel cards (discussed in greater detail herein) may be displayed in the screensaver mode, thus only channel cards will display the option to permit display in screensaver. In another embodiment, certain card types may be converted through user selection. In one embodiment, web cards may be converted into channel cards. It is realized that the segregation of functions between the card types may improve user interaction and adoption of the different feature sets available to each.

According to another embodiment, systems and methods for streamlining user interaction with electronic content may include a process for generating new visual representations mapped to computer content. Shown in FIG. **47**A is an example process **4700**, for generating a user interface element. At **4702**, a visual representation associated with a computer operation for creating a new visual representation is displayed on a computer system display. The visual representation may comprise a nascent card. Nascent cards are configured to always be available to a user, that is, they are configured so a user can not remove them. In some embodiments, the position of the display of nascent cards cannot be changed by the user. In one embodiment, the nascent card is always displayed in a home view, at the bottom right corner of a home view page. For a new page this may include the nascent card appearing in the upper left corner of the page, when no other cards are displayed on the same page. At **4704**, execution of the functionality associated with the visual representation occurs. At **4706**, a first animation is displayed to the computer system user showing the visual representation sliding away from its present location to reveal a new visual representation. At **4708**, a second animation is displayed to a user showing the computer system zoom into the new visual representation to present a quick access view at **4710**.

The quick access view is configured to permit a user to select computer content to associate with the new visual representation. In one example, this includes presenting a display of frequently accessed web content (e.g. web pages) to the user in the quick access display. It is likely that the user will intend to return to a page frequently accessed, in which case, the display will meet the users needs, however, the quick access view is further configured to permit entry of a uniform resource indicator (e.g. a url), and further configured to allow a user to request display of bookmarked locations. At **4712**, a user is permitted to select computer content to associate with the new visual representation, and in response to selection of the computer content, the computer system displays an animation to the user depicting the computer system zooming into a first view of the selected content at **4714**.

In one alternative, new visual representation may be generated without selecting a nascent card, in process **4750**, FIG. **47**B. For example, a web card may include a hyperlink directing a computer system to display the linked web page in a new window. At **4752**, a user selects an open in new window link. In one alternative, the link may include instruction to open an new tab. In response to a request to display a web page in a new window, a new visual representation is generated and associated with a mapping to the web page. The computer system displays a transition from the current web card view to the home view, **4754**, displaying the nascent card. In an optional step, the process zooms out the home view so that the nascent card is rendered on one page. The system presents an animation to the user, **4756**, similar to step **4706**, showing the nascent card sliding away from its position, revealing a new visual representation. The system then zooms in on the new representation, **4758**, displaying a first view of the mapped content, **4760**.

Common Card Configurations

According to one aspect, cards should have common features to promote user acceptance and improve adoption of different cards, while providing familiar a form. According to some embodiments, most cards are configured with a similar anatomy. According to some embodiments, cards comprise certain common elements described with reference to illustrated examples.

With reference to FIG. **15**A shown is an example of a web card when not in focus, however, the common features among the cards are discussed in greater detail. Header **1502** run along the top of the card. The color depends on the color scheme employed to differentiation the type of card: in one example white is used for web cards, black for channel cards, and blue and grey for system cards. Optionally the header includes a favicon **1504** (the favicon may be retrieved from the site being view in the case of web and channel cards and a custom favicon is employed for system cards). The header further comprises a title **1506** for the site or activity conducted, and a body **1508**. In response to focus on a card the display of the card becomes a little larger relative to its display when out of focus and the card controls **1552-1556**, FIG. **15**B, are revealed on the header, when in a focused state.

Card options **1552**, reveals the card options, and may in some embodiments invoke an animation of the card flipping to reveal selectable options. Share, **1554**, is configured to permit a user to share the card with other user. Delete, **1556**, removes the card from the home view. Card controls, such as **1552-1556** are typically not available for system cards, which typically can not be shared or deleted. According to one embodiment, the photos & video system card is configured to display the card options (in one example the photo & video system card permits selection of "Show in screensaver"). **1508**, FIG. **15**A, card body varies by the type of card dis-

played. In one embodiment, a web card body **1508** comprises a thumbnail of the current state of the web page. The current state thumbnail may be updated. Updates may occur in conjunction with a timer. Typically the timer is set for default operation, and is not configurable by a user, although in some embodiments a user may access and modify an update interval for web cards through system configurations.

The body of a channel card (not shown) comprises a visualization of the rss feed from the web site source. Sites that do not have rss feeds, typically, will not be able to be displayed as channel cards. However, customized visualizations for some static sites are preloaded and for the preloaded static sites an rss feed is not used to display the web site content in a channel card. System card body (not shown) comprises a custom image configured to represent the system activity mapped to by the system card.

Options and Information Associated with Various Card Embodiments

According to one embodiment, selection of the card options icon causes the device to display a visualization of the card turning over. The "back side" of the card, FIG. **16** (showing a plurality of examples of the backs of various card types) comprises the following options: Show as channel **1602**, which transforms a web card into a channel card, and vice-versa, based either upon checking or unchecking box **1604**. If the channel is a photo and video channel, this control reads "Show as channel using [lens]." A lens is a customized visualization for computer content. Shown in FIG. **16** is an example lens "Slideshow" at **1606**.

According to another embodiment, the option for show as channel is either shown as permanently checked for system cards that are always available as a channel (e.g. the photos and video card), or as absent for system cards that are not available as a channel (e.g. a system settings card or communications card). Show in screensaver, **1608**, is an available option for channel cards. Typically **1608** is not an available option for other card types, however, the photo and video system card does permit its content to be displayed in the screensaver. According to one example, new channel cards are configured to not display in screensaver mode by default and this option is not checked for new channel cards. Shared from, **1610**, provides information on the user or device from which the card was shared. According to one embodiment, system cards cannot be shared, and do not display "shared from" information. Additionally, shared from **1610**, does not display for card generated by a present user. In one example, shared from **1610** is responsive to computer focus (e.g. hover). Hovering over the Shared From line, **1610**, causes the device to display an informational bubble with a list of people to whom the card was shared. Other options may be employed for displaying shared from information. Other options may include linking to a display list for share from information, and in some embodiments may include displaying the shared entities on the back of the card without selecting **1610**, Shared From. In such embodiments a maximum number of shared entities may be displayed before requiring selection of a more control. The more control expands on the list of shared entities to provide for listings that do not fit within the space provided on the back of a card.

Shared to, **1612**, provides information about whether and to whom the card has been shared. According to one embodiment, system cards can not be shared, thus no shared to information is displayed. By default shared to, **1612**, does not display until a card has been shared. According to some embodiments, the "shared to" field is responsive to focus. In one example, hovering over the shared to line causes the device to display an informational bubble with the list of people to whom the card has been shared. Other options may be employed for displaying shared to information. Other options may include linking to a display list for share to information, and in some embodiments may include displaying the shared entities on the back of the card without selecting **1612**, shared to. In such embodiments a maximum number of shared entities may be displayed before requiring selection of a more control (not shown). The more control expands on the list of shared entities to provide for listings that do not fit within the space provided on the back of a card. Optionally the more control may cause the device to display an information bubble containing the remaining shared entities and/or all the shared entities.

Organization of the Home View

Typically, the home view is configurable by the user. New items may be added, existing items may be moved and/or removed based on user selection. The home view further comprises some visual representations that can not be removed. Commonly requested system operations have visual representation displayed on the home view that can not be deleted. According to one embodiment, a user may reorganize the display but not remove representations for system operations. For example, visual representations that map to system operations (e.g. a communication card and a camera card) cannot be remove from the home view. Nascent cards, for example, the Browse the web card, can not be removed from the home view. According to some embodiments, the Browse the web card is further limited in configurability, in that, the positioning of the card will not change relative to the other cards. For example, the Browse the web card will always be displayed last. In other examples, nascent cards may have other positions that do not change, first to be displayed, last displayed on first page of the home view, etc. In some embodiments, even nascent cards may be reorganized in the home view display.

The user interface may include default settings for organization. For example, a default organization for the home view comprises an arrangement roughly based on order of creation, from left to right, top to bottom. Other organization may be employed right to left, top to bottom. In one example, the user of the streamline device is located in China, and the default organization is presented from right to left.

One example default setting for the home view establishes a number of cards to display per page of the home view. In one example the default causes the computer to render twelve cards on a page. In another example, the display of the twelve cards further comprises the tops of the cards on the next page or the bottoms of the cards on the previous page, as appropriate. In one embodiment, the home view includes maximal display thresholds configured to improve the ability of the user to absorb the information presented. In some embodiments, a maximal number of visual representations per screen is set. in one example, the maximal number of visual representations is used to define a GUI page. In another example, the maximal number of visual representations is associated with a maximal number of full view visual representations, and the page is configured to include portions of views of other visual representations available on adjacent pages. A computer operation that would cause the computer device to exceed the maximal number results in the creation of a new display page. The home view is organized into as many pages that are required in order to maintain the maximal threshold of display items.

It is to be appreciated the different organization options may be employed for the home view. In one alternative, frequency of use may be employed to organize the cards displayed in a home view. The most frequently accessed

content may be display first with the least frequently accessed content being display last. Another option includes the use of last accessed information associated with a particular card. The most recently accessed card may be displayed first and the card with oldest use would be displayed last.

Creating New Cards

An example process **1040**, FIG. **10**B may be executed to generate a new card. Process **1040** is executed in response to a user clicking the Browse the Web card on the home view at step **1042**. In response to the execution of the Browse the Web card, the devices displays the card sliding to the right (or down to the far left on the next row if it is already on the far right) as a new web card is created in its place at **1044**. At **1046** the system renders apparent motion in the display, showing the system zooming into the new web card. At **1048**, the system displays a quick access view configured to generate a mapping between the new card and web based content. According to some embodiments, newly added cards (whether created by the user or received as a shared card from another user) always appear at the bottom of the home view next to the Browse the Web card. In other embodiments, the Browser the Web card may display a different title, for example, "New Card." It is to be appreciated that the title is not particularly relevant to the nascent card, but rather, the functionality for generating new card is.

New cards may also be created on the fly during a browsing session as part of process **1080**, FIG. **10**C. Process **1080** begins at **1082** in response to either a user clicking an "open in new window" link on a web page, or in response to a user executing a keyboard shortcut (e.g. Shift-click) to perform the same function. Additionally links that contain computer instructions to open link in new tab will invoke the same functionality at **1082**. In these cases, the system shows an animation zooming out of the current card to the home view at **1084**, optional step **1086** cause the system to display movement to the last page of the home view (if not there already), at **1088** the Browse the Web card slides out of the way, revealing the new card in its place at **1090**, and finally zooming into the new card, **1092**. Process **1080**, may be implement in association with a timer to govern the overall execution time of process **1080**. In one example, the process and animations should take no more than about half a second.

According to one embodiment, selection of the Browse the Web system card causes the system to execute a process for generating a new web card. As part of the process for generating a new card, the system presents a quick access view to the user. Referring again to FIG. **5**, shown is an example of a quick access view. As discussed earlier, the body **502** of the quick access view may display a frequently accessed list of content. A user may select from the displayed content to generate a mapping for the new cards, and enter the web page view for that content. Additionally at **510**, the quick access view presents news from, for example, the device manufacturer. At **510**, news regarding operation of a streamlined device may be shared with the streamlined device user community. Advice on new features may be provided, **512** and awareness drawn to new features. Hints and suggestions may also be displayed, for example, **514**, referring users to GOOGLE DOCS, an on-line word processing/office suite solution.

According to another embodiment, creation of a channel card is available for sites with rss feeds or sites for which customized visualizations are available. From the home view any web card with rss feeds or with customized visualizations can be used to generate a channel card. From a web page view, hovering over the option add channel caused the system to display a preview of the channel card. In one embodiment a channel card includes features not observed in web or system card. For example, channel card **204**, includes a display, **280**, for an individual rss item received from the online source. In this case the rss item is a headline that permits direct access to an article (typically through a web card). Channel card, **204**, will display a plurality of rss items one at a time through the channel card, thus the content in a channel card periodically changes, until all content items have been displayed. At that time the channel cards starts again from the beginning displaying each one of the plurality of source items.

Removing Cards

According to one embodiment, the home view may be configured by a user. A user may remove visual representations from the home view. In a card example, a user may access card option by providing focus on the card. As discussed above, card options are revealed in response to focus. Options may comprise a delete option. In one example, a delete option is display as an "X" in the upper right corner of a hover view of a card. To delete a card from the home view, a user executes the delete option by clicking on the "X." In response to removal of a card from the home the view, the remaining cards on the home view are reordered by the device. In one example, the reordering comprises shifting of the displayed cards to rearrange them into the organizational schemes discussed above. In order to ensure a close/delete selection was intended and to provide the user with the ability to change their mind, an information display bubble may be generated in response to the delete execution. The information display bubble maps to functionality that causes the device to undo the delete operation in response to selection by the user.

According to one embodiment, a dialog bubble is displayed off of the header of the home view. The dialogue bubble displays a message confirming the delete operation and further comprising a mapping to functionality provided, the causes the device to undo the delete operation in response to selection. According to another embodiment, hot-key functionality is provided that cause the device to undo that last activity performed by the device. In one example, ctrl-z, is mapped to functionality that permits the last activity to be undone.

Home View Navigation

According to one embodiment, the home view is configured to display a maximum number of visual representations. For embodiments employing cards that map to computer content and/or operations the maximal number of visual representations will restrict the number of cards displayed per page of the home view. In one example the display number is set to twelve. In response to exceeding the display number, the device executes operations designed to render a new page for the excess. In response to multiple pages, the device is configured to display indications of content (e.g. cards) on adjacent pages. In response to movement of a pointer, visual representation displayed on the screen tracking computer focus, new pages may be displayed. In one example, multiple pages are provided by the view. The display rendered by the device gives a user the impression that adjacent pages appear above and below the current page view. For example, indications of adjacent card content appear at the top and bottom of the home view body. By scrolling the pointer towards the bottom of the screen the user causes the device to display the next page of the home view, further by scrolling the pointer towards the top of the screen the user causes the device to display the previous page of the home view. Additionally, according to one embodiment, arrow keys provided on the device's keyboard may be used to navigate pages of the home view. In one alternative, keyboard shortcuts mapped to navi-

gation functionality. In one example, keys with mapped navigation functionality include shift-arrow, crtl-arrow, alt-arrow to provide further navigation options.

One may navigate away from the home view at any time by selecting a visual representation and causing the device to execute the mapping associated with the representation. In one embodiment, a user selects a card and in response the device renders a page view appropriate for the selected card (e.g. web page view for a web card). In one embodiment, an integrated scroll wheel provides navigation functionality from the home view. Scroll wheel functionality may be dependent on state of the device, and may also be dependent on configuration of the device. In one example, the device's present state is its home view and manipulation of the scroll wheel causes the device to display the channel card view. According to one embodiment, returning to the home view is streamlined for the user. This may be accomplished through navigation buttons on the keyboard, for example **168**, FIG. **17**. The navigation button operates as a toggle between present view and home view, returning a user to the home view when the present view is elsewhere, and returning the user to the previous view when the present view is the home view. A navigation element provided in visual representation of computer content may also provide the same functionality. For example, navigation button **250**, in home view **200**. In another example, a navigation button, **352**, FIG. **3**C is provided in a web page view.

Reorganization of visual elements in the home view may implicate navigation with the home view. In one example where the home view presents cards to a user through multiple pages, moving cards across the pages requires navigation within the home view. According to one embodiment, specialized navigation options are provide to render sufficient context for the relocation across pages. In one example, a user drags a card across pages within a home view. The device in response to the drag across pages modifies the display of the home view to show a zoomed out display of the home view. The zoomed out display is permitted to violate any associated threshold with respect to number of displayed items on a page of the home view. The zoomed out display in a view of multiple pages with each element of the pages being reduced in size to allow them to be displayed in one screen. For long lists of cards, or other visual representations, this may result in extremely small visual representations or cards. It is realized that even thought the result may be visual representations so small that they cannot be fully appreciated, the user goal is to relocate a card, and the temporary loss of interactivity to the user will not impact the user operation. Once a card is relocated, the device caused the display to "zoom" back out to conform to management and organization scheme discussed, including maximal display thresholds, for example.

Navigation away from the home view may also occur through selection of the visual representations that map to computer content and/or functionality. In one embodiment, clicking on a card will zoom into that card, revealing the page view for that card. In one example, clicking on a web card caused the device to display the web page view for that card's content. In another, clicking on a channel card may invoke different behavior. In a channel card example, the navigation behavior depends on the location within the card that is clicked.

Some channel card embodiments, display items from rss feeds one at a time, scrolling through the rss items based on a timer, and in one embodiment, based on selection of navigation tools within the card. If a user clicks on the body of the channel card for example, the device causes the channel page view to be displayed for that card. If a user clicks on an rss item displayed in the channel card, the device causes a web page view for the specific content to be displayed. In one embodiment, a channel card maps to a content feed from the NEW YORK TIMES. Clicking on an article title in the channel cards causes the system to execute a mapping to the content by opening a new web card and zooming into the new card's web page view of the selected article. Clicking elsewhere the channel card causes the system to zoom in to the channel page view for that card.

According to one embodiment, searching from the home view causes the user interface to navigate away from the home view. For example, entering search terms into search box **254**, FIG. **2**, causes the device to execute a process for generating a new web card and navigating to the page view of the newly created web card. The device in creating the new web card automatically creates a mapping to web content based on default settings. In one example, the default settings provide for searching to occur through the well known search tool GOOGLE. Other search tools may be established as the default. By accessing a system card for settings, in one example, displayed as a Settings card, a user may change the default for the search tool. Further default operations are provided by the user interface. While in the home view, any typing that occurs on the keyboard (except for hot keys and keyboard shortcuts) will by default populate the search box of the home view. Pressing return or clinking on the search tool **255**, will execute the process for a new card and pass the search terms to the default search tools, and the device displays the web page view of the default search tool and its response to the search terms.

Example Page Views

According to one aspect a streamlined user interface is provided, that permits a user to access electronic content on a device responsive to context and responsive to device configuration. According to one embodiment, an element of a graphical user interface that provides streamlined access includes a plurality of views of computer content. Another element of the GUI, includes visual representations of computer functionality and/or content that are associated with a mapping to at least one of the plurality of views. In one example, the visual representations comprise cards, as discussed above. The various types of cards can each be associated with one of the plurality of views, and may also be associated with multiple views. A high level view may be provided to manage and organize the (for example in a home view). The card may be associated with a lower level view which permits more direct interaction with the viewed content. In one example, a web page view permits a user to interact with displayed web content for a web page. Other views including a channel page view, provide lower level views that permit interaction with content specific to channel cards, and system page views provide, for example, a lower level view of system functions mapped to by the system cards. System cards may be further classified into nascent cards, and different page view provided according to classification.

According to one aspect, methods and systems for streamlining user interaction with computer content and operations may include a process for providing consistent feature accessibility across a plurality of views and a plurality of visual representations of computer content. FIG. **45** illustrates one example process, **4500**, for providing consistent accessibility to computer content across a plurality of views and a plurality of visual representations of computer content and/or operations. At **4502**, a view of computer content is provided. The view is configured to include visual elements responsive to computer focus, however achieved. The view of computer content includes a header display further comprising a focus

header display and an unfocused header display. In response to focus, the focus header display reveals additional controls associated with the computer content, **4504**. At **4506**, focus is removed from the focus header display and the computer system transitions the view of content to an unfocused header display, concealing the additional controls at **4506**. In one embodiment, responsiveness to focus provides for user consistency in accessing a plurality of views and with respect to visual representations of computer content, and at **4508** a plurality of representations and views provide additional focus responsive displays, which are configured to include focused and unfocused presentations.

According to another aspect, methods and systems for streamlining user interaction with computer content and operations may include a process for providing consistent feature accessibility by providing a primary means for navigation to computer content and computer operations to occur through a consistent view. FIG. **46**, shows an example process, **4600**, for providing consistent navigation operations to a user. At **4602**, a home view is presented to a computer user. The home view presents an organization of a plurality of visual representations of computer content, **4604**. The visual representations form the building blocks of the home view. Each visual representation is mapped to computer content and/or operations that a user may select by, for example, hovering on the visual representation, by clicking on it, and by using hot keys—among other options. At **4606**, a user executes the mapping to the computer content and/or operations. In one example, execution of the mapping causes the computer to navigate to a first view of the content. In some embodiments, process **4600**, comprises further computer logic executed by a processor to access a stored mapping, and to generate the rendered presentation on the computer display of the first view.

Typically the first view comprises a navigational elements displayed in a portion of the first view. The navigational element is mapped to the home view. In one example, the home view also comprises a navigational element, and a user may toggle between the first view and the home view by executing the navigational element. In process **4600**, a user executes the navigational element to return to the home view at **4608**. In one alternative, a button, a sequence of keyboard keys, a hot key may also cause a computer system to execute a transition to a home view. In another alternative, the same button, sequence, of keyboard keys, and hot key may cause the computer to return to the first view upon a subsequent execution. Returning to the home view at **4608**, presents the user with a consistent view of content options, and the user may select a new first visual representation mapped to other computer content at **4610**. Execution of the new first visual representation caused the computer to navigate to a first view of the mapped computer content, returning process **4600**, to step **4606**. Again the user may select a navigational element to return the home view at **4608** to select yet another first visual representation. In some embodiments, process **4600**, represents a resident process that runs in the background throughout operation of a computer device. In other examples, process **4600** may be exited by powering down the computer system (not shown). And in one alternative, a user may exit process **4600** by selecting different navigational tools that execute mappings to other views. In another alternative, (not shown) a view selector may be invoked by changing a configuration of a streamlined device. Invoking the view selector can cause the computer system to execute a transition to a different view without a return the home view. In one example, invocation of the view selector by changing the device configuration from laptop to easel, causes the computer system to transition from a home view to a channel view.

Example Web Page View

According to one embodiment, a web page view is the computer implemented expression of a selected web card. The web page view is configured to present a consistent view of web based content to a user. The web page view comprise a number of elements that are maintained across the web page view of different content, although in some examples additional features may be provided to address unique aspects of the content being viewed. In one embodiment, the web page view includes a header, **354**, FIG. **3**C, a body, **356**, optionally a scroll bar **358**, and a navigation element, **352**. It is to be appreciated that individual web page views may comprise additional elements, and should not be read as limited to elements discussed with respect to this example. The Header **354**, is responsive to focus of the device. In another embodiment, the header is responsive to the type of content being displayed. In one example, the header is further responsive to the communication protocol used to access the web based content. The header portion may also be responsive to the state of the device, and state of the computer operation being performed (e.g. loading content).

Accordingly, in one embodiment the header **354** element of the display appears differently based on focus, content, and context of the web site being viewed. When the header is out of focus, for example, the header may be rendered in an out of focus display, shown by example in FIG. **18**A. The header display comprises navigation element, **1802**, page title **1804**, optionally a visual element associated with the web page is displayed **1806**, the visual element may be a favicon (reduced scale image associated with a website), and where appropriate the header displays a lock symbol **1808** to indicate a secure site. For secure sites, hovering over the security symbol **1808**, caused the device to display additional information regarding the security of the site. In one example, a dialogue box appears including information on the security signature for the site.

Page title provides the user the name of the page s/he is on in human-readable form. In some embodiments, when the header is out of focus, the title of the page extends to the right as far as possible. How far the title is display is dependent on what other elements are included in the header. For example, when the header is out of focus the title has the most room in the display. Upon focus, the device causes the header display to change. In one example, FIG. **18**B illustrates a header, **1850**, in focus, and device now displays additional tools in the header. Additional tools may comprise a share tool, **1852** (for sharing the web card mapping to the view), bookmark tool, **1854** (adds web page to bookmark list), more tool, **1856** (permits revelation of additional tools), search tool, **1858**, and close tool, **1860**. Additional tools may be displayed in the header on focus, including, for example, back and forward buttons, **1864** that may be used to access other pages in browsing history. Additionally, the title display from unfocused view, **1804**, FIG. **18**A, may be transformed into a web address box **1862**, FIG. **18**B. In one embodiment, focus on the header display **1850**, causes the device to transform the title display into an address box, **1862**. The address box maintains the title of the web site, until a user interacts with the address box, by for example typing into it. Once the system detects interaction with the address box, the display in the address box will indicate a url and/or uri for the current site (or whatever the user is typing). Other options may be made available through the header by display and selection of a more tool, **1856**. For example, the device displays a toolbar, **1904**, in response to user selection of the more tool **1902**, FIG.

19. The toolbar supports operations, **1906**, provided by conventional browser of other known systems. The toolbar **1904** may also be revealed in response to keyboard short-cuts, for example, crtl-f opens a search box, **1908**, permitting the user to specify terms to find within the web page view. The toolbar display may be responsive to the content appearing in the web page view. For example, the device will display zoom tools instead of –text size and +text size in response to .pdf content.

Other standard operations and options may be supported in the toolbar. In one embodiment, the toolbar supports, find in page, find in page Next/Prev, for scrolling through hits within the page, save photos, –text size/+text size, to increase or decrease the size of the text (text sizing may be implemented globally so that changes in text size for one web page view will affect all web page views—alternatively the setting may be local to the present web page view), refresh, cut, paste copy, and print. Print and save behavior for a streamlined device does depart from conventional operation.

According to one embodiment, the header may also display additional tools whether the header is in focus or out of focus, responsive to the content of the page. In one embodiment, the header, **1890-1891**, FIG. **18**C, displays an add a channel tool, **1892**, regardless of focus (**1890** out of focus, **1891** in focus). In one example, the device determines that the accessed content has either a rss feed, or a custom view for the static web-page, and in response reveals the add a channel feature in the header. Selecting the add a channel causes the device to execute a process for generating a new channel card as discussed further herein.

According to another embodiment, the state of the content in the view may impact the tools displayed. For example, when a user is interacting with the address box (e.g. to enter a URL or URI) or when a page is not fully loaded, possible actions are limited. The device causes the header display to adjust to remove options that are unavailable (e.g. namely Share, Add channel, Bookmarks, and More), and adds the following elements Go/Stop tool **1895**, FIG. **18**D, and a status indicator **1896**. Selecting Go causes the device to initiate navigation and start loading a URL or URI listed in the address box. The stop button appears while a page is loading—clicking the button will stop the page from loading. The Go/Stop tool toggles between a presentation of Go when a page ahs not yet been loaded and Stop when a content is being accessed, for example. The status indicator may include a customized visualization. The customized visualization may be configured to tie various functions and features together. In one example, the status indicator is configured to display as a "loading spring," **1896**. **1896**, is animated to show that the device is actively downloading content. It is to be appreciated that although the Go/Stop tool is display in the same space on the header in the described example, the display for either function may also be rendered separately, or display above and below, among other options.

The header display may be further responsive to focus and selection. In FIG. **18**E, shown is a header after selection of the search tool **1858**. In response to selection of the search tool, the device alters the heading display to include an search box **1898**, for entry of search terms. Once the search is initiated the device alters the header to eliminate search box **1898**.

Navigation within Web Page View

According to one aspect, navigating web pages within the web page view is similar to existing browsers on other systems. For most links, when a user clicks the link, the device executes a process to load a new web page into the body of the current web page view, replacing the contents of the current page. The device operates different in response to links that request a new window. For new window links or new tab links the device executes a process to generate a new web card, and further the new card is mapped to the link destination. The device executes functionality that causes the display to "zoom" into the new card and present the content from the link destination.

According to one aspect, transitions between active web page views occurs through the home view. The user selects a navigation element (e.g. **352** FIG. **3**C) to return to the home view, alternatively, a navigation button (e.g. **168**, FIG. **17**) will return the user to the home view. In another embodiment, hot keys and/or shortcut keys may be employed to cause the system to return to a home view. In response to selection of the shortcut and/or hot keys, the device executes a transition to the home view. From the home view a user may select any other card or generate new cards, as discussed above.

Creation of channel cards occurs differently from a web page view, than when done in a home view. In one embodiment, in response to selection of add channel in a web page view, the system returns to the home view, displays the creation of the new card, and presents the creation of the new card so that both the new card and the web card from which add channel was selected is displayed. In this example process any maximal display threshold may be ignored in order to display both the originating card and the new channel card. Once the card generation is complete the system zooms back into the original web page view for continued browsing. Alternatively, a system may enter a channel view of the newly created channel creation. In one embodiment, the behavior of the system may be altered according to settings accessed through a system card, and in one example a settings card.

Channel Page View

According to one embodiment, the channel page view is the zoomed-in computer implemented expression of a channel card. A channel page view presents a unique view into content made available through a website. The channel page view employs visualizations similar to corresponding visualization on channel cards but the large format of the view allows for a better display of content, and provides for increased interaction with users. The channel page view also comprises a mapping from the display content to the source from which the content is derived. Typically, content displayed in the channel page view is derived from an rss feed associated with a web-site. Additionally, some non-rss sites have customized visualizations that can be accessed through a channel page view.

According to one embodiment, the channel page view configured to present a consistent framework for user interaction with rss style content. The channel page view comprises a number of elements that are maintained across the channel page views of different content, although in some examples additional features may be provided to address unique aspects of the content being viewed. An example channel page view is illustrated in FIG. **20**A, **2000**. The channel page view shown includes a header **2002**, which includes a display for the title of the channel page view, **2006**, a share tool, **2006**, web link **2008**, and status indicator **2010**. The header may also include navigation element **2012** for returning to a home view among other functionality. The channel page view also includes a body **2014**, for displaying available rss items **2016-2022**. Selection of the displayed rss items **2016-2022**, caused the system to display the web page view of the selected article, web link **2008**, shown as "go to web page" in FIG. **20**, creates a new web card for the page from which the channel was created.

Other channel page views may also be employed. FIG. **20**B, illustrates another example of a channel page view, **2050**. Shown in **2050** is a specialized channel view for a news

channel. Example view **2050** is separated into two scrollable columns, providing a headline column **2052**, for displaying individual rss items and a content column. Content column, **2054**, presents the details of rss items (if the content does not require additional space other than the displayed screen a scroll bard will not be displayed). The content column shows the headline, **2056**, includes the time the item was posted **2058** (in one example relative to current time), the author, **2060**, and the item's description, **2061**, in its entirety. According to one embodiment, images and/or script (html, xml, etc.) may also be displayed in the content column (not shown). The content column may also comprise a navigation element, **2062**. In one example the navigation element is labeled "full story." The system launches the item's url as a new web card, and transitions to a web page view of that url in response to selection of **2062**. Optionally, focus and/or hovering over the full story button causes the system to generate a preview view of the new card that would be created in response to selection of full story.

Selection of one of the content items, e.g. **2070-2076**, causes the system to display the headline, author, posting time, and full description for the selected rss item. Scroll bar, **2080**, is displayed if the number of items in the headline column, **2052**, require additional pages of display. A scroll bar may be display in the content column as well, if the content display requires additional pages. According to one embodiment, channel page views are configured to retain current state. The system accesses retained state when revisiting a channel view. According to one embodiment, a process for accessing a channel page view determines if any state information is retained for the channel page view. In response to a determination that state information exists, the system presents the last accessed content item in the content column. If the last content item is no longer available, the system selects the first content item by default.

An alternative view of channel content comprises a full screen view of rss items. In one example a channel full view comprises a headline display center in the screen. According to another embodiment, preview text is displayed in conjunction with the rss item. In one example, the channel full view includes displays configured to identify the source of the rss feed. In another example, a logo for the source feed is captured and displayed as part of the channel full view. In response to selection within the channel full view, the system displays a content menu permitting selection of any of the rss items for the content source. In one embodiment, the content menu appears as a list of rss items displayed at the lower portion of the channel full view. The content menu is configured to be responsive to manipulation of the embedded scroll wheel. Manipulation of the scroll wheel progresses through the displayed content menu, and in response the system displays the selected content in the full view with preview text appearing below. Shown in FIG. **21** is an example of a channel full view **2100**, with content menu **2102** activated by selection. Manipulation of the scroll wheel causes the system to scroll through the items in the content menu. In one embodiment, the content menu transitions between selections by rendering the apparent movement of the entire content menu either to the left of the right depending upon the orientation of the manipulation of the scroll wheel. Alternatively, the content menu is also responsive to arrow keys on the keyboard. Depressing an arrow key causes the system to display the apparent movement of the content menu to the next item.

According to some embodiments, the various channel views, for example, page and full view may also include animations of transitions between available rss feed items. Default operation of the streamlined computer system and streamlined user interfaces cause the system to display transitions from one rss item to the next in association with a time period. Transitions may include animations that cause the system to display new rss items sliding into position as the previous rss item slides out of view. In one example, an rss headline item slides out of view in response to the next headline item sliding into view. The device and user interfaces may also be responsive to manipulation of the scroll wheel. For example, manipulation of the scroll may by default invoke a transition to a channel card view.

System Page View

According to one embodiment, the system page view is the zoomed-in computer implemented expression of a system card. The system cards provide a user with the ability to interact with the device's settings and other computer operations. System cards also enable a user to access customized functionality, for example, photo and video interactions. According to one aspect, certain interactions with computer content are identified as special. The identification of special interactions is reflected in rendering those operations as system cards. System cards have the property, that they cannot be removed by a user. This insures that identified functionality remains available regardless of user intention. Additionally, the number of system cards can be limited, providing a distinctive interface element for system operation and important interactions even within the streamlined GUI. In one embodiment, system cards are limited to a photo and video card (controlling photo and video operations), a settings card (permitting access to device settings), a bookmark card (discussed herein), a camera card (permitting set and interaction with a camera), and a browse the web card (discussed herein). Although it is to be appreciated that other system cards may be implemented and the invention is not limited to the system cards provide as example above.

The anatomy of the system card is similar to the anatomy of other cards. For example, an embodiment of the system card includes a header, **2202**, FIG. **22**, a navigation element, **2204**, a title **2206**, and a body **2208**. As discussed herein, nascent cards may be categorized as a type of system card. Alternatively, nascent cards may comprise their own category. While nascent cards share a similar format as the other cards, nascent cards do not have a page view. Nascent cards map directly to system functionality, that is executed upon selection or as part of a call from another process.

Channel Card View

According to one aspect, a channel card view is provided to display high level navigation options to a user, to enable streamlines selection of content and operations by making selections within a streamlines view. Similar to the home view the channel card view is configured to render a consistent organization of navigational elements of a streamlined graphical user interface. Unlike the home view, the channel card view is not based on pages of display, rather the channel card view is organized to display only one type of content, that is content that may be rendered in a channel (i.e. having an rss feed or customized visualization, and for special system cards). The channel card view is available in both laptop and easel modes of the streamlined device. In response to configuration of the device into easel mode, the channel card view is rendered by default. The content displayed in the channel card view is dependent on the channel cards displayed in the home view. Alternatively the channel card view may be invoked by operating the scroll wheel embedded in the device.

In response to operation of the scroll wheel, the system displays the channel card view, FIG. **23**, illustrates an example of a channel card view, **2300**. According to one

embodiment, the channel card view comprises selector display **2302**. In another embodiment, the channel card view includes a selector display, **2302**. The selector view is invoked upon the first click of the scroll wheel while in easel mode, in laptop mode, additional clicks may be required to invoke the channel card view and selector. In one example, the three clicks are necessary to invoke the channel card view while the device is in a laptop mode. In another example two clicks are required. Upon invocation the channel card view comprises a visualization of the channel cards available for selection. In one example, the visualization resembles and behaves like a rolodex. As the user moves the scroll wheel individual channels **2304-2310** appear to flip around the hinge of the device. In response to selection, the foremost channel card displayed is selected and displayed full screen. In one example, selection includes activation of button **168**, FIG. **17**, from the easel mode of the device, although in laptop mode selection can occur in a number of ways including by operation of button **168**. In another example, a different button may be selected or short cut keys, among other options.

In response to selection from the channel selector view, the system displays a channel page view. On example of a channel page view for photo content is shown in FIG. **24**. According to one embodiment, the channel page view of the photo content automatically scans though each photo by default in the channel page view. The photo display restarts again at the begin when the end of the photo content is reached. In another embodiment, the default operation is to display only the selected content item (e.g. photo). FIG. **25**A, illustrates an example logical diagram of the behavior for the channel view. From channel page view **2502**, selection of the menu button (e.g. FIG. **4**, **166**), caused the device to display the content menu, **2504**, over the present channel page view. Selection of the menu button from the content menu, causes the device to display the selected content item in a channel page view **2502**. From channel page view **2502**, operation of the scroll wheel (e.g. FIG. **4**, **132**), causes the device to display channel selector view **2506**.

According to one embodiment, photo content displayed as a channel in the user interface, can be accessed similarly. Shown is an example of channel functionality, in logical diagram **2550**, FIG. **25**B. From channel page view **2552**, of the photo channel, selection of the menu button (e.g. FIG. **4**, **166**), causes the device to display the content menu, **2554**, over the present channel page view. Selection of the menu button from the content menu, causes the device to display the selected content item in a channel page view **2552**. From channel page view **2552**, operation of the scroll wheel (e.g. FIG. **4**, **132**), causes the device to display channel selector view **2556**.

According to one embodiment, channels for displaying video content and/or audio content operate with a different logical flow. In one example, additional interactivity is required to allow a user to, for example, stop a video, start a video from the middle, among other options. According to one embodiment, the streamlined device must be able to accommodate routine operations through manipulation of only a scroll wheel and a mouse, for example when the device is in an easel mode. It is to be appreciated that in other configurations the logical flow for the behavior of the channel view may be different, and may take advantage of addition input/output devices available in other device modes. Shown in FIG. **28**, is an example of a logical flow for device/UI functionality, during the normal operation of a channel view of video content. At **2802** shown is a channel page view of video content, select of button (e.g. FIG. **4**, **132**), causes the device to display contextual menu **2804**. Contextual menu, includes a visual representation of selectable options, **2806**. The selectable options rendered include at least a rewind/fast forward selector, resume selection, other episodes. Selection of rewind/fast forward selector invokes a timeline controller **2809** shown in the content page view, **2808**. The time line controller is responsive to rotation of the scroll wheel, providing fast forward in one direction and rewind in the other. From **2808**, selection of button **132** causes the device to return the view to channel page view **2802**. Selection of resume form **2804**, also causes the device to return the view to channel page view **2802**. Selection of other episodes from **2804** causes the device to invoke content menu **2810**, which provides a selector view of available content for the channel. Selection of content, **2811**, from the selector view causes the system to play the selected content in channel page view **2802**. From channel page view **2802**, the devices displays channel selector **2812**, in response to operation of the scroll wheel. The logical flow illustrated may be used for interactions with audio content as well, for example, to control playing of .mp3 or other audio file.

Selecting Device Configurations

According to one aspect, systems and method for streamlining user interaction with electronic content include a plurality of physical configurations for a streamlined device, the streamlined device may be, for example, a portable computer. As discussed above the plurality of configurations may represent modes of operation of the device, and include for example laptop mode, easel mode, among others. According to another aspect the user interface that governs interactions between the user the device and accessed content is responsive the selected mode and/or configuration of the streamlined device.

According to one embodiment, the streamlined device retains information on device configuration and/or mode. In on example, information is maintained as a state variable in a systems register. In another example, the system may obtain state from signals provide by an embedded sensor, as discussed above. The state information may be used to generate a system response, when the device detects a change in configuration and/or mode.

In a typical setting a user interacts with a streamlined device in one of two viewing modes. The two viewing modes reflect a level of interactivity with the device being viewed. A lean forward view encompasses interactions between a user and conventional computer systems. One example includes a user typing at the keyboard of their laptop computer, in essence, the user leans into the computer device and display to perform interactions and view content. Similarly a user's interaction with desktop computers are conducted through a forward mode of interaction. It is realized that traditional computer devices and systems are notorious bad at permitting interaction with content and the device from greater distances.

Interactions with content and other device for example a television are included in the second type of viewing mode. A lean back mode of viewing is meant to encompass ordinary television viewing, and the interactions a viewer has with their DVR for example. Television and their associated devices are configured to provide for lean back styled interactions. It is realized that conventional system and methods fail to provide for the transition from lean forward to lean back interactions. As discussed above, streamlined devices can accommodate a plurality of configurations, and individual configurations may be designed to accommodate the different viewing modes. Additionally, the streamlined user interface is configured to be responsive to the configurations. For example, transitions from a laptop mode of the device

may trigger changes in the user interface. According to one embodiment, a transition from laptop mode to easel mode, causes the device to transition from either a home view or web page view to a channel selector view. The transition from laptop to easel, may also trigger a transition from a channel page view to channel selector view. In one alternative, the transition causes the device to display a channel full view for that channel card. The transition from easel to laptop may also cause the device to alter the view displayed to a user. In one example, if a new card has been shared, the device causes the home view to be displayed. The last page of the home view is displayed where the new card is rendered.

According to another embodiment, methods and systems for streamlining user interactions may include a process for transitioning between different user viewing positions. Shown in FIG. **48**, is an example process **4800**, for permitting a user to select a viewing mode for a streamlined device, and in response displaying a user interface view configured for the selected viewing mode. At **4802**, a streamline computer system presents computer content using visual representation optimized for different viewing modes. In particular, ones of the visual representations are configured to display in a "lean forward" user viewing mode and a "lean backward" viewing mode. In one example, a lean forward user viewing mode includes a user typing at a keyboard of a laptop computer. In another example, a lean backward user viewing mode includes a user viewing a television from a distance. One should appreciate that the examples provided are illustrative and are not intended to be limiting. A streamlined device permits a user to select a device configuration most suited to a particular user viewing mode. For example, a user may rotate a streamlined device's display relative to its based about an longitudinal axis, transitioning the device from a laptop mode to an easel mode. According to one embodiment, the easel mode of the device permits improved "lean back" interactions with computer content. In other words, the easel mode makes it easier to view the streamlined device's display from distances greater than conventionally used with laptop computers. Selection of a lean backward user viewing mode at **4804**, triggers the streamlined device to transition to a content display that improves user interaction. On one example, in response to the user selection at **4804**, the computer system display transitions to a channel viewing mode at **4806**. The channel viewing mode is configured to present computer content, in large footprint displays, and further is designed to streamline user interaction with the streamlined device by permitting access through a first I/O profile associated with the streamlined device in easel mode. The first I/O profile in easel mode may consist of a scroll wheel and a selector button. In some embodiments, the first I/O profile may include a volume control.

Other processes may be invoked to cause a user interface to transition between views in response to changes in device configuration. Shown in FIG. **49**A, is an example process **4900**, for transitioning between a lean forward view to a lean backward view. At **4902**, a user changes the streamlined device configuration from laptop to easel mode. In response the computer system switches view from its current view to a channel view. In some examples, the computer system is already in a channel view, and no transition is implemented. The easel mode of the streamlined device is associated with a first I/O profile including an integrated scroll wheel and a selector button. Upon manipulation of the scroll wheel, a view selector causes the computer system to display a progression through a sequence of channel cards as the scroll wheel is rotated, at **4906**. Optionally the sequence may include other customized cards (in one example a photo and video card). Upon selection of a displayed channel card, a channel full view is invoked at **4908**. The channel full view displays the content of the selected channel card in the entirety of the computer system display screen. The system returns to the channel view in response to further rotation of the scroll wheel.

Shown in FIG. **49**B, is another example process, **4950**, for transitioning between user views. At **4952**, a user changes a device configuration from an easel mode to a laptop mode. In response to the change in mode, the device displays a home view of available content, at **4954**. In some examples, the system may already be in a home view and no transition occurs. The user may interact with the streamlined device through a second I/O profile at **4956**. In some embodiments, the second I/O profile includes a keyboard, a touch pad, buttons, web cam, and a scroll wheel.

Streamlined Device Community

According to one aspect, a common experience may be created for multiple users, fostering a community experience. According to another aspect, the common experience may also include a community aspect. The community aspect includes sharing of content between users, sharing of content and configurations, sharing of content, configurations, and customizations, among many other options. In particular, sharing may involve the transmission of user interface elements to other users. The visual representations that map to content and/or computer operations on one device may be transmitted to another device or another user. In one example, a user may share a card and any of its configurations with another user. Access to the shared user interface elements, in some embodiments, facilitates communal computer usage. In one example, a first user may be watching media on their streamlined device, another user known to the first user, may receive a user interface element that retains information related to the accessed content and information related to the present context. That is for the first user watching a movie, the first user may share the user interface element (e.g. a channel card mapped to video content) through which s/he is accessing the movie, and permit the another user not only to watch the movie, but to take up the movie at the same point in time, so in essence, they get to enjoy the movie together. Content and context retention by user interface elements that can be shared provides unique advantages to the users of the streamlined devices.

In some embodiments, the community aspect incorporates formation of groups. In one example, groups are formed based on at least one of a social relationship, familial relations, work relationship, etc. Different groups may share different content and even different context for the same content through for example, shared user interface elements. Groups may be further organized into nodes or a node may comprise the group. In some examples, a family forms a node regardless of the family's location relative to each other. As part of the configurations that may also occur as part of the device's purchase, at least one of the users identifies his/her family members. The family members are configured into a node. The node may be used to permit sharing of content. The node may be used to permit sharing of cards. Further updates to configurations on device in the node may be propagated automatically to other devices in the node.

Communication between groups members may take place over the internet. In one embodiment, a sub-network utilizes the internet or other communication network to communicate between streamlined device users. In another embodiment, a service is hosted for streamlined device users to facilitate communication. The service may also be connected to the internet and in one example functions as a gateway between

users, their devices, content, sharing, and communicating. The service facilitates real time sharing, in one example a user may share a movie s/he is viewing with another. Not only may the user share the information that s/he is watching a movie, but the user may allow another to watch the movie starting at the same place, allowing the users to perceive they are watching the movie together.

FIG. **29**A, illustrates an example interaction between a user, the device, and the user interface, where the device causes a web card to be shared to other users. Shown is web page view, **2900**, in response to user selection of share **2902**, the device displays a share interface **2904**. The device accesses the user profile to determine any groups or nodes that the user has created. In example view, **2900**, the user has only one group, family members **2906**. Each entry listed in family members represents another streamlined device/user. Box **2908** permits sharing of the card with other users of conventional systems. Comment may be included. For example, a user may type any comment on the card being share into box **2910**. Comments entered on a shared card are displayed with the card on receipt by another streamlined device user. The user selects any one or more of the listed members **2914**-**2920**, or the user selects **2912** to share the card with all the listed members. Once the selections have been made and any comments entered the user selects **2924** Share! And the card is transmitted. By selecting Never Mind **2924**, the device closes the share interface. In FIG. **29**B, shown is an example of a web page view after a share operation has been completed. At **2950**, the device notifies the user that the selected item has been shared. For other streamlined device users share content is received by their streamlined device as a web card. For other users, an e-mail with a link to the content is delivered. It is to be appreciated that FIG. **29**A, illustrates a user with one group or node. In other embodiments, a user may be permitted to generate a plurality of groups or nodes. Box **2926** may first display a list of groups, that a user may select from, in order to show the members of the selected groups. In one embodiment, box **2926** lists more members that can be accommodated in the space provide by the interface. An optional scroll bar may be displayed into to permitting display of additional group members.

FIG. **30** illustrates an example of a received shared card, **3000**. The state of the streamlined device may impact behavior of the device in response to receipt of a shared card. In screensaver mode, a streamlined device presents received shared cards as part of the screen saver view, **3000**. Comments included with the shared card, are presented in an overlay box **3002**, and any text that does not display is a first screen is scrolled into view **3004**, while the content of the shared card is displayed. The overlay box **3002**, may include an image of the user who shared the card and/or content, at **3006**. Shared display **3000**, may also include an indicator regarding the number of content items in the shared card. For example at **3008**, the number of content items in the photo set being displayed indicates 1 of 4. Other information associated with individual content items may also be displayed at **3010**. In the screen saver mode, the shared content items are each display, a timer controls the length of time each item is display before continuing on to the next item. The device then returns to any screen saver content that was being displayed when the shared card came in.

For users receiving shared content while in an active view (e.g. non-screensaver views), the system may provide a notification message to indicate shared content. From the home view, for example, the system generates notification message to display in a message bubble. An visual indicator is employed to notify the user that a system message is present. In one example, the navigation item displayed in the home view (e.g. FIG. **2**, **250**), is animated to indicate a message. An example notification is illustrated in FIG. **31**. Navigation element **3102** may be animated, the device displays message bubble **3104** upon focus resolving on element **3102**. The user may select **3106** or **3108**. Upon selection the device displays the shared card of **3106**, or the device returns to the home view **3108**.

Similar notifications may be employed in conjunction with other views. Further similar notifications may be used for other contexts. In response to displaying a web page view of a web page with stored user name information, a device may present a notification message regarding the availability of account information. FIG. **32** illustrates an example message for a site with two stored accounts. By default the system displays the content without using the stored account information. The device causes the message to disappear if a selection is not made, or if browsing activity continues without selection of an account. According to some embodiment, notifications can either require a response/action or the notification may disappear if no action is taken. Typically, notifications that do not require an action are used to convey information.

In one embodiment, from channel view in laptop mode, the notification of the arrival of new cards is the same as in home or page view. Typically navigation element **3302**, FIG. **33**, does not appear in the channel view. In response to a new card, the device displays **3302** and may animate its display. In response to focus on the **3302**, a notification bubble **3304** appears. The system displays the home view for the page containing the first new card in response to selection of **3302** or **3306**.

When a notification is available in channel view, moving the scroll wheel invokes the Channel Selector view, but the system displays the first new card by default (instead of the current channel). When in channel view in easel mode, the notification of the arrival of new cards is similar as above, except that both the navigation element and the notification bubble may appear at once. Shown in FIG. **34**, is an example of a notification message from a channel view while in easel mode. The system displays both **3302** navigation element and **3404** message bubble together in response to shared content.

In one embodiment of a streamlined device, the user interface is configured to provide for passive viewing of selected content through a screensaver mode. The device enters screensaver mode in response to the expiration of a idle timer expiring. Any interaction with the device causes the device to exit screensaver mode. In screensaver mode, channel cards and content are display in order. An idle time out period may be established to force a transition to a new channel in the event the idle time out period is exceeded before all the content of the channel is displayed.

According to some embodiments, the community experience is enhanced through particular features and functions facilitated by the device, the user interface layer, and/or configurations designed to facilitate interaction among users (either with the device features themselves or also with third party services). According to another aspect, community experience and/or community learning furthers adoption and/or integration of new computer features into a particular user's routine. It is realized that facilitation of communication and/or content sharing across users improves introduction of features and increases the likelihood of their adoption. Context and content sharing are provided for and through streamlined interfaces. The sharing opportunities may be device sensitive, that is, a user with a same/similar device can be identified by a specific user. The users with identical devices

may have the most options for how to share, what content to share, context settings, and may also include the ability to share features associated with the content. In one embodiment, a user may enable features associated with a card based interface and through sharing the card make another user aware of features of the card interface that the receiving user was unaware of. In another embodiment, the shared card provides all of the configurations established for the originating card. In one alternative, security features may be invoke to clear certain settings of a card to insure that for example, banking information is not shared to another user. In another alternative, the user selecting share is prompted to confirm the share request. In response to a security identifier, the prompt to confirm includes a warning banner regarding the identified security issue. In one example, a user receives a warning that sharing a card including banking content may compromise the bank accounts referenced. In another embodiment, a share request with an identified security issue is denied.

In some embodiments, the community aspect incorporates formation of groups. In one example, groups are formed based on social relationship, familial relations, work relationship, etc. Different groups may share different content and even different context for the same content through for example, shared user interface elements. Groups may be further organized into nodes or a node may comprise the group. In some examples, a family forms a node regardless of the family's location relative to each other. As part of the configurations that may also occur as part of the device's purchase, at least one of the users identifies his/her family members. The family members are configured into a node. The node may be used to permit sharing of content. The node may be used to permit sharing of cards. Further updates to configurations on device in the node may be propagated automatically to other devices in the node.

According to another embodiment, sharing options may also be adapted to different devices being operated by sharing users. For example, certain features may be disabled when a card or content is shared outside of a streamlined device community. In some embodiments, communities may be based on the device being employed, membership in a group, and/or membership in a node. Additionally communities may be based on social interactions, familial relationships, etc. Examples of communities include name lists of user identified by the device operator. In one example, community lists and/or community groups are pre-generated in response to questions asked of a potential purchaser. User names may also be added and maintained by the user. Additionally, the system may create community lists on behalf of a user based on the user's activity.

For example, when composing and sending an e-mail, the system may query the user to determine if the recipient should be within the user's community. In one alternative, the system may add the recipient to a potential community and make the addition subject to a later confirmation. In another option, the e-mail recipient is added by default to a group with minimal sharing options. The user is provided the option of changing the group associated with the recipient. Additions to community list may require additional configurations to become effective. For example, the device user may be required to accept additions, a device user may be required to identify if the added name corresponds to another user of a similar/same type of device, among other configurations options.

Specialized Operations

According to another aspect, certain features of convention computer interactions have been specially configured to present streamlined interaction between a device, a user, and content. In one embodiment, the device does not incorporate mass storage (i.e. a hard drives), instead the system is configured to employ RAM and Flash memory storage. The capacity of the flash memory is significantly less than traditional mass storage options. Thus in some embodiments, traditional features such a download, have been configured to operate differently for a streamlined device.

In one example, download links do not cause a streamlined device to download content. Instead, a download link is interpreted by the device, which initiates a process for handling download links. An example process includes accessing a third party provider of remote storage to retain the content identified in the download link. According to one embodiment, the purchase of a streamlined device, includes creation of an account with access to on-line storage. In one example, remote storage for a device is provided in conjunction with user information stored to customize the device and configure its operation to the particular user.

In one embodiment, customized configuration files supply information required for integration for known third party providers. In some embodiments, customized configuration files are used to establish default interactions with for example, Shutterfly, an on-line third party photo management and sharing service. In other examples, customized configuration files are used with other third party on-line service providers. Other third party providers include GMAIL, HOTMAIL, YAHOO! MAIL to provide examples of e-mail service providers. Other providers include, for example, on line banking providers, financial system providers, university systems, web site development providers, dating services, and social networking sites. One should appreciate that the integration of an on-line service need not depend on a predetermined configuration file or settings, rather, various embodiments of the systems and methods are adapted to learn from user interaction and develop appropriate configurations. Certain embodiments are further configured to take advantage of configurations developed by other users of such systems and methods, permitting sharing of content, sharing of configurations, etc. According to one aspect, by using input from the users, learning from user interactions, permitting content sharing, permitting sharing of configurations, and by providing default configurations for more popular services almost any on-line service can be integrated.

Still other embodiments, may query the user upon entry/access into a new service for any information necessary to configure the device to provide streamlined presentation and integration of the third party service. In some embodiments, the process of streamlining user interactions with electronic content includes querying the user regarding subscribed services and/or functions the user would like to use on their computer. For example, during processing of a purchase of a streamlined device a prospective purchaser receives a query form, or the user may receive individual questions regarding the purchaser's present computer use. In one example, the questions will generate a profile of subscribed services, whether pay or free, and customize the user interface to permit streamlined interaction with those services out of the box. In one example, default configurations and/or questions designed to elicit required configurations, allow the user to interact with GUI elements customized to his/her current use and preferences.

A process for handling download links may be responsive to the particular content selected for download. In one example, the system analyzes the selected download link to determine the type of content selected for downloading. In response, the system identifies accounts held by the user for processing the selected content. If multiple accounts exists that handle the selected content, the account first created is

used by default. A user may alter default operation through use of system settings. For photo content, as one example, the system identifies the content as a picture (.jpg, .gif, .tif, etc.). The user's profile contains information for accessing FLICKR, a third party provider of photo access and management services. The download link is interpreted into an operation to transfer the file into the user's FLICKR gallery. Other services may be used to host the content, for example, the download link may be interpreted to cause the system to upload the photo to the well known MYSPACE or FACEBOOK services. For content that cannot be identified, the streamlined device causes the download request to be interpreted as a delivery request to a generic remote storage service. The remote storage service may be one provided through a third party provider, or may be the remote storage space provided by a seller of the streamlined device.

An example process, **4200**, is shown in FIG. **42** for streamlining user interactions with digital content. The user interaction with digital content is streamlined by enhancing features for simplifying user decisions by providing access information associated with multiple user accounts for a particular online source. Multiple account profiles can be retained and presented to a user of a streamlined device. Example process **4200** begins at step **4202**, permitting a user to access electronic content through the streamlined device. At **4204** the source of the electronic content is determined and matched against available access information. Access information may be stored in a device profile or in another example in a user profile. These profiles may be loaded at startup of the device or may be accessed in real time when a content source is determined. At **4204**(NO) no access information is available for the content source, and the electronic content is display at **4206**. Example electronic content includes web pages and other online resources. At **4204**(YES) the content source is matched against available access information. At **4208**, access information is displayed to a user in a user interface. The access information typically identifies a user account available to access the content source. In one example, for an e-mail service this will include the e-mail address displayed in the interface. A plurality of access accounts may be available for a given service. The streamlined device is configured to handle multiple users with multiple accounts to any given services. The user interface permits the user to identify which access account is desired. At **4210**(NO) the user does not identify an access account, and at **4212** a default access account is used. The default access account does not provide any account information, and the content source page is display, at **4216**, not including any sign-on information. At **4210**(YES) a user selects an access account and at **4214** the access information is passed to the content source, and the displayed content at **4216** will return content after the sign-on process has been completed.

In another embodiment, a process for handling download operations is provided. The process includes causing the device to display a download interface, for example interface, **3500**, FIG. **35**. The interface presents the user with options for processing the download request. Box **3502**, lists members of the user's group to whom the user may send the file. Box **3504**, permits a user to enter e-mail addresses to send the file as an attachment or as a link if a size threshold is exceeded. For a user who has configured third party service capable of handling the file content, Box, **3506**, displays the configured providers (e.g. Shutterfly **3508**, Flickr **3510**, DropBox, **3512**). Each configured service displays with the account name configured for the service, for example at **3514**.

In one example, process, for interpreting download operations also includes displaying the interface in response to computer focus on the download link. In another example, hovering over the link causes the system to display a download interface. For files sent by e-mail the system may be configured with a maximal file size for particular e-mail services. Typically files sizes of less than 5MB are not filtered, thus if the e-mail domain address is not recognized, a default threshold of 5MB may be used. For services with known size constraints the system will transmit the file to the e-mail address. If the constraint is exceed, the system transmits a link to the file instead of the actual file.

Another to another embodiment, selection of print operations may be handled in a similar fashion as to downloads. When a printing device is attached to a streamlined device, printing proceed as known conventionally. When a printer is not attached, a process for interpreting print operations may be invoked. The process for interpreting print operations, includes causing the device to display a print interface **4102**, FIG. **41**A. The print interface provides box **4104** listing group members, **4106** listing configured services, and box **4108**, for entering destination e-mail addresses. Selection of **4110** sends the item in a print format, in this example a .pdf file. In other examples, different file formats will be displayed as part of **4110** (e.g. word, doc, txt, wpd, xls, etc.). in some embodiments, file size limitations will be employed on delivery of print format files. FIG. **41**B illustrates in greater detail examples of print **4150** and download interfaces **4152**. Print and download operations may invoke a progress bar displayed over the current view, with the option of canceling transmission.

In another embodiment, a streamlined system includes the following features:

- Employs remote mechanisms to access and/or deliver files
- Mechanisms include identifying a remote action in response to file type
- Web Content Support for system that does not utilize local memory for storage
- In response to download selection (i.e. request to locally store content) display message regarding new functionality (transfer or remote store)
- Maintain user profile—associate web service providers for a particular user
- web services—remote storage, email, photo sharing, custom web page info, storage acts (e.g. Drop Box and Google Docs)
- In response to mouse over/selection/hover/indication of selection display interface to enable remote delivery of content/file
- Providing for selection of remote delivery to a domain (including home network) including an act of verifying the content/file's size does not exceed a threshold value
- In response to passing site check deliver content/file as attachment
- In response to fail, store in provided remote storage, generate link, and deliver link to content/file

According to one embodiment, a method for streamlining user interaction with electronic content includes a process for interpreting online executable operations into streamlined operations. One example process, **3600**, FIG. **36**, for interpreting online executable operations into streamlined operations includes the step of permitting a user to access digital content online, at **3602**. The online digital content is presented to a user through a graphical user interface at **3604**. The GUI permits a user to select executable operations in the presentation of the online digital content, at **3606**. In response to selection of the executable operation, the computer system determines if the executable operation requires local access. In one example, the executable operation includes a down-

load operation that would cause a conventional computer system to store a file on a local mass storage device such as a hard drive. In response to the determination that the executable operation requires local storage, a streamlined computer device transforms the executable operation's local access request into a remote access operation, at **3608**.

In one example, the remote access operation includes a storage request to a online service provider. Various online service providers permits remote storage of various computer files. Certain service providers optimize the provided service for specific file types, such photo management and sharing services. Other examples include e-mail access providers, video and audio media management and presentation services. In other examples, a service provider may offer generic data storage not specific to any file type. In one embodiment, step **3608** includes transforming a download request to a local mass storage device into a storage request to a remote service. The example process can include acts of identifying the file type associated with the download request, and selecting a service provider based on the identified file type.

In another example, the executable operation that requests local access to storage on the streamlined device may include a print operation, a save operation, a copy operation, a paste operation. Typically the streamlined device is configured to transform save, download, and print operations into remote storage operations. According to one embodiment, a print operation may be streamlined to permit the print operation without an attached printer. According to one embodiment, in the absence of an attached printer, a print request generates a print file in response to execution. Conventionally the print file would be stored locally on a computer hard drive. In some embodiments, a streamlined device does not employ local mass storage devices such as hard drives. Such streamlined devices are configured to transform local storage request into remote storage operations. In one example the print file may be directed to a generic storage provider, and the file stored in the remote memory associated with the generic storage provider. In another embodiment, the system checks the resulting file size for the print file. If the size of the file exceeds a threshold, then the system may further streamline the operation. For example, by providing a link to the file and transmitting the link to a destination. A link may be transmitted through an e-mail instead of transmitting the file itself, for example.

Another example process may be used in conjunction with **3600**. In one example, a sub-process, **3700**, FIG. **37**, for permitting selection of executable operations in online content can be employed. At **3702**, computer focus is resolved on an executable operation embedded in online content. Executable operations can include download, print, save, transfer, retrieve, get, fget, and generally comprise operations that require a large memory block of nonvolatile storage, and in particular hard drive space. A streamlined computer device includes logic stored in memory and executed by a processor to analyze a focused executable operation, and at **3704**, the executable operation is analyzed. The logic may include programming to trap download request for example. Once a request is trapped the streamlined device can determine what action is appropriate based on the type of request. At **3706**, it is determined whether the executable operation requires local storage. At **3706** (No) local storage is not required and the executable operation is performed at **3708**. At **3706** (Yes) it is determined that local storage is required and the operation is transformed into a remote access operation at **3710**.

Example process **3600** may include additional sub-processes and/or individual steps performed in process **3600** may also comprise other processes. In one example sub-process **3800**, FIG. **38**, for transforming online executable operations associated with local storage into remote storage operations may be employed as part of a larger process, for example, process **3600**. At **3802**, a streamlined computer system identifies a result of an executable operation identified in a web browser displayed on the system. At **3804**, a file type associated with the operation is identified. At **3806**, at least one of a device profile and a user profile is accessed, to retrieve available services, **3808**, that may be appropriate for the particular file type. Various services for a particular user may be associated with the device itself, and a plurality of users may have access to multiple services or even more than one account for an individual service. Logic stored in memory and executed by a processor may determine matched services at **3810** by accessing information stored in at least one of a device profile and a user profile. The access information may contain records on available services, their access information, and the access information may include a file type designation for a particular service.

In one example, executed logic matches a file type associated with the executable operation to a file type associated with a remote service **3810** (YES), and in response the computer system retrieves access information for that remote service at **3812**, the local access operation can be redirected into a remote service operation at **3814**. For example, the computer system may access the remote service using the obtained access information, and provide an interface to transmit the object (data) of the local access to a location within the remote service. In one embodiment, a default service may be configured for any streamlined device. In the absence of matched services at **3810** (NO), the computer system may invoke a default remote service at **3816**, obtain the default service access information at **3812** and redirect the local access operation into a remote service operation at **3814**.

In another example, process **3800** may be coupled with an interface display presented to a user of the streamlined device. And step **3812** may be used to populate a user interface with a plurality of matched services. The interface may also display additional information associated with the service, for example an account name may be display to permit a user to distinguish between an account s/he set up as opposed to another user. The system may permit the user to designate the remote service appropriate for use in the interface and step **3814** occurs to redirect the local access operation into the user selected remote service.

In another embodiment, an example sub-process, **3900**, FIG. **39**, for obtaining service access information may be employed to retrieve remote service information. Example process **3900**, includes an act of accessing at least one of a device profile and user profile to obtain matched services at **3904**. Obtaining matched services may include filtering from the available services, or it may include retrieving all available services listed in the at least one of a device and user profile. In one example, filtering is performed based on a file type that is the subject of a local access operation, in another example, filtering may be performed to return only remote services of the current system user, although it is to be appreciated that other filtering operations may be performed. Once available services are matched **3904**, with or without filtering, the matched services are displayed to a system user at **3906** in a user interface. The user interface permits the user to select from the remote services at **3908**. Selection may include clicking on a visual indicator shown in a computer display (e.g. a check box), other options include links to the service, other visual indicators may be used, including drop down boxes and other html, xml, and human readable computer displayed forms. In one alternative (not shown), if the user

does not select a service within a predetermined period of time, the system may cancel the operation entirely, or alternatively select a default remote service automatically. At **3910**, the object of the local access operation is delivered to the remote service.

Configuring Streamlined Devices

According to one aspect, streamlining user interaction with computer content includes improving user interfaces display, permitting configuration of streamlined device during operations. Streamlining user interaction may also include providing for the pre-configuration of a streamlined device with content customized to a particular user.

In one embodiment, a potential user may purchase a streamlined device on-line. During an order process, the user may establish an interactive session with an order management system. The order management system may be operatively connected to device management systems, including for example remote storage space, remote profiles, among other information. The order management system is configured to retrieve information on the potential user during a purchase session. The potential user is asked for permission to retrieve information from the computer system on which they are ordering from. The interactive session may also inquire if the user is ordering from home (and thus their home computer), or from another location. In response to granting permission, an executable object is downloaded to the potential user's home computer. The executable object may be encoded use any language, the specific coding language/environment is not important rather the operations performed by execution of the object on computer hardware is.

The executable object mines the home computer of the potential user for web usage information. Web usage information may include for example, browser history (IE and FireFox), favorites, stored accounts, bookmarks, access frequency information. The web usage information is retrieved from the home computer and processed either by the order management system or a streamlined device management system to generate visual representations associated with mappings to computer content. The content that is mapped to, is determined for example, be determined the most frequently accessed site for the potential user. In one embodiment, web cards are generated for the potential user. Each web card is pre-loaded on the device that will be shipped upon completion of the order. Further, for the web cards capable of being display as a channel card—both types may be pre-loaded. Other specialized cards may be generated and pre-loaded for the user based off of information obtained from their home computer. For example a bookmark card is generated from the retrieved bookmarks—The retrieved bookmarks may be passed through a filter to remove bookmarks that have not been accessed in for example 6 months. Although other time periods may be used to filter bookmark information. Web cards may also be created from the most frequently access bookmarks.

Additional information may be mined from the potential user's computer. In particular, communication settings for the home computer may be detected. Any wireless communication setting may be retrieved and preconfigured. After preconfiguration the streamlined device may be considered fully operational out-of-the-box.

The interactive session may also be used to supplement any retrieved data, for example, if the executable object detects frequent access to third party providers—Flickr and Google Docs for example but cannot detect account name and other access information, the interactive session may query the user to provide the required information.

In other embodiments, the user may be sent executable code via an e-mail during or after a purchase. For example, a user not on his/her own computer during the ordering process may be sent an e-mail containing an executable file, to be run when the user is on their home computer. In another example, a party may purchase a streamlined device for another. The purchaser may provide an e-mail address for the intended recipient, who may execute the file to transmit customization information for the streamlined device.

According to one embodiment an example process, **4000**, FIG. **40**, for pre-configuring a streamlined device is shown. Process **4000**, beings at **4002** in response to a request to purchase a streamlined device. The request is accepted at **4002**, and in response a management system requests permission to perform a data mining operation on a recipients recipient's computer. Typically the person/entity ordering the streamlined device is the same as the recipient, in which case an executable file can be transmitted at the same time a online request to purchase a streamlined device occurs. In one alternative, the request may be entered offline. During an offline request an e-mail address may be requested and the executable file delivered to the recipient's email, notifying him/her of the file and its use to pre-configure their computer. In another alternative, the party ordering the streamlined device intends it for another. When the purchaser and recipient are different, the e-mail address is requested for the intended recipient. At **4006** (YES), permission is obtained and the executable file retrieves information associated with online use of the recipient's computer at **4008**. Additional information may be collected including configuration options on the recipient's computer. System settings such as network communication configurations may also be retrieved. In one example, wireless network data is retrieved to permit the streamlined device to connect immediately to a recipient's home network.

During an order for a streamlined device, demographic information is collected on the recipient at **4010**. This often includes at a minimum a name and destination address for a recipient of a streamlined device. Thus even if permission is not granted **4006**(NO) information can be collected to pre configure a streamlined device at **4010**, in this case the information is constrained to what is provided by the purchaser during the transaction. At **4012**, accumulated information is used to pre-configure the streamlined device. Pre-configuration includes establishing wireless network settings for the streamlined device, and may include generating visual representations of online content that are mapped to for example the most frequently accessed sites on the recipient's home computer. Other configuration can include generating visual representations that map to services configured on the recipient's computer (online banking, photo management services, file sharing services, media management services, e-mail providers, etc.). The visual representations may be configured with access information including user names and passwords so that a recipient can switch over the streamlined device seamlessly.

Special Purpose Computer

FIG. **51** shows a block diagram of a computer system **5100** in which various aspects of the present invention may be practiced. For example, various aspects of the invention may be implemented as specialized software executing in one or more computer systems including multiple computer systems communicating over network. Computer system **5100** may include a processor **5106** connected to one or more memory devices **5110**, for storing data. Typically computer system **5100** is implemented without hard drive devices. Memory **5110** is typically used for storing programs and data during

operation of the computer system **5100**, and typically comprises Flash memory. Components of computer system **5100** may be coupled by an interconnection mechanism **5108**, which may include one or more busses (e.g., between components that are integrated within a same machine) and/or a network (e.g., between components that reside on separate discrete machines). The interconnection mechanism enables communications (e.g., data, instructions) to be exchanged between system components of system **5100**.

Computer system **5100** may also include one or more input **5104**/output (I/O) devices **5102**, for example, a keyboard, mouse, trackball, microphone, touch screen, a printing device, display screen, speaker, etc. Output devices may include video cards and separate video memory for improved processing performance. Storage **5112**, typically includes a computer readable and writeable nonvolatile recording medium in which signals are stored that define a program to be executed by the processor or information stored on or in the medium to be processed by the program. The medium may, for example, be a flash memory. Typically, in operation, the processor causes data to be read from the nonvolatile recording medium into another memory that allows for faster access to the information by the processor than does the medium. This memory is typically a volatile, random access memory such as a dynamic random access memory (DRAM) or static memory (SRAM).

Referring again to FIG. **51**, the memory may be located in storage **5112** as shown, or in memory system **5110**. The processor **5106** generally manipulates the data within the memory **5110**, and then copies the data to the medium associated with storage **5112** after processing is completed. A variety of mechanisms are known for managing data movement between the medium and integrated circuit memory element and the invention is not limited thereto. The invention is not limited to a particular memory system or storage system.

The computer system may include specially-programmed, special-purpose hardware, for example, an application-specific integrated circuit (ASIC). Aspects of the invention may be implemented in software executing on hardware, hardware or firmware, or any combination thereof. Further, such methods, acts, systems, system elements and components thereof may be implemented as part of the computer system described above or as an independent component.

Although computer system **5100** is shown by way of example as one type of computer system upon which various aspects of the invention may be practiced, it should be appreciated that aspects of the invention are not limited to being implemented on the computer system as shown in FIG. **51**. Various aspects of the invention may be practiced on one or more computers having a different architectures or components that that shown in FIG. **51**.

Computer system **5100** may programmable using a high-level computer programming language. Computer system **5100** may be also implemented using specially programmed, special purpose hardware. In computer system **5100**, processor **5106** is typically a commercially available processor such as the well-known Pentium class processor available from the Intel Corporation. Many other processors are available, including multi-core processors. Such a processor usually executes an operating system which may be, for example, the Windows-based operating systems (e.g., Windows Vista, Windows NT, Windows 2000 (Windows ME), Windows XP operating systems) available from the Microsoft Corporation, MAC OS System X operating system available from Apple Computer, one or more of the Linux-based operating system distributions (e.g., the Enterprise Linux operating system available from Red Hat Inc.), the Solaris operating system available from Sun Microsystems, or UNIX operating systems available from various sources. Many other operating systems may be used, and the invention is not limited to any particular operating system.

The processor and operating system together define a computer platform for which application programs in high-level programming languages are written. It should be understood that the invention is not limited to a particular computer system platform, processor, operating system, or network. Also, it should be apparent to those skilled in the art that the present invention is not limited to a specific programming language or computer system. Further, it should be appreciated that other appropriate programming languages and other appropriate computer systems could also be used.

One or more portions of the computer system may be distributed across one or more computer systems coupled to a communications network. For example, various aspects of the invention may be distributed among one or more computer systems (e.g., servers) configured to provide a service to one or more client computers, or to perform an overall task as part of a distributed system. For example, various aspects of the invention may be performed on a client-server or multi-tier system that includes components distributed among one or more server systems that perform various functions according to various embodiments of the invention. In one embodiment, the Litl cloud is maintained on server systems accessible from a plurality of devices. These components may be executable, intermediate (e.g., IL) or interpreted (e.g., Java) code which communicate over a communication network (e.g., the Internet) using a communication protocol (e.g., TCP/IP).

It should be appreciated that the invention is not limited to executing on any particular system or group of systems. Also, it should be appreciated that the invention is not limited to any particular distributed architecture, network, or communication protocol.

Physical Configurations

Referring to FIG. **52**C, when the portable computer **100** is in the easel mode, the base is disposed at an angle **134** to the display component. This angle **134** is adjustable, for example, to allow a comfortable viewing angle to the display screen to be maintained for different positions of a user **136** and of the portable computer **100**, as illustrated in FIGS. **52**A, **52**B and **52**C. For example, when the user **136** is further from the portable computer, the angle **134***a* (FIG. **52**A) may be made smaller than the angle **134***b* when the user is closer to the portable computer (FIG. **52**B). As discussed above, in one example, the orientation sensor (not shown) may be used to detect, either approximately or precisely, the angle **134** and to provide the information to the computer operating system.

Referring to FIGS. **53**A and **53**B, there is illustrated a portion of the portable computer **100** illustrating a hinge assembly **138** that allows the portable computer to be configured into either the laptop mode (FIG. **53**A) or the easel mode (FIG. **53**B), according to aspects of the invention. According to one embodiment, the hinge assembly **138** accommodates 0-320 degrees of rotation, allowing a minimum angle **134** (see e.g. FIG. **52**C) of 40 degrees. However, it is to be appreciated that the hinge assembly **138** may allow greater or fewer degrees of rotation, provided only that sufficient rotation is allowed so as to configure the portable computer **100** into either the laptop mode or the easel mode. As discussed above, in one embodiment the portable computer **100** includes an orientation sensor (not shown) that is configured to detect a relative orientation of the display component **102** and the base component **104**. In one example, the orientation sensor may

be an accelerometer incorporated into the base component **104**, as discussed above. Alternatively, the orientation sensor may be incorporated into the hinge assembly **138** and may be used to detect movement of the hinge assembly, and to translate that movement into an information about the relative orientation of the display component **102** and the base component **104** (for example, a size of the angle **134**). It is also to be appreciated that the orientation sensor may include electronic or mechanical components, or a combination thereof. For example, the hinge assembly may be provide with detents that provide an indication of the mode of the portable computer.

As discussed above, and also illustrated in FIGS. **53**A and **53**B, the portable computer may also comprise a scroll wheel **132** that allows a user to adjust, control and/or select various aspects of the portable computer (e.g., wireless capability or speaker volume) or items displayed on the display screen **110**. A housing **160** may contain or support various mechanical and/or electronic components (not shown) that are coupled to the scroll wheel **132** and are configured to convert physical movement of the scroll wheel into electrical signals. These electrical signals may be provided to the central processing unit of the portable computer **100** which processes the electrical signals so as to translate movement of the scroll wheel into control of a selected feature, for example, adjusting the volume of the speaker(s) or selecting a particular item displayed on the display screen.

Having thus described several aspects of at least one embodiment, it is to be appreciated various alterations, modifications, and improvements will readily occur to those skilled in the art. Such alterations, modifications, and improvements are intended to be part of this disclosure and are intended to be within the scope of the invention. Accordingly, the foregoing description and drawings are by way of example only, and the scope of the invention should be determined from proper construction of the appended claims, and their equivalents.

The invention claimed is:

1. A customized user interface for a computer system with a plurality selectable I/O profiles configured to present computer operations to a user in a format configured to a selected I/O profile on a display component of the computer system, the user interface comprising:

at least one processor;

a map based graphical user interface, executing on the at least one processor operatively connected to a memory of the computer system, the map based graphical user interface, when executing, is configured to display information on the display component of the computer system, wherein the map based user interface is further configured to:

display a plurality of views of a plurality of visual representations of computer content on the computer system, wherein the computer content includes at least one of selectable digital content, executable computer applications, configurable computer settings, selectable computer operations and passive digital content;

display the plurality of visual representations of computer content rendered on the display component, wherein the plurality of visual representations of computer content include an association to a first home view of the plurality of views, the first home view including a display of the computer content, and wherein the each of the plurality of visual representations is responsive to focus and execution, wherein execution includes selecting the visual representation, and wherein the first home view is a first organizational view of at least one application and computer content displayed responsive to activation of the system; and

an execution component, executing on the at least one processor, configured to:

identify at least a first and a second computer system configuration based on sensor input indicating a position of the display component relative to a base component;

select, responsive to the sensor input, a first home view from the plurality of views for the first computer system configuration, wherein the first home view is configured to organize a first set of the plurality of visual representations;

filter the first set of visual representations to present content that is optimized for viewing in the second system configuration at least in part by identifying content to filter, removing the identified content from the first set of visual representations, and generating a second set of visual representations based on the filtered first set of visual representations, wherein the second set of visual representations includes at least one different member than the first set of visual representations; and

transition, automatically in response to the sensor input, the display component between at least the first home view of the plurality of views and a second default content view of the plurality of views, wherein the second default content view is configured to organize the second set of visual representations, wherein the second default content view is a second organizational view of at least one application and computer content, and wherein the sensor input indicates a transition to the second computer system configuration.

2. The user interface of claim **1**, wherein the execution component is further configured to transition between the plurality of views in response to execution of at least one of a computer system operation, a visual representation, a computer system configuration, and a change in computer system configuration.

3. The user interface of claim **1**, further comprising a plurality of modes of content for the computer content rendered on the computer display, wherein the plurality of modes of content comprise at least one of a web content mode, a channel content mode, a media content mode, an application content mode, a communication content mode, and a passive content mode.

4. The user interface of claim **3**, wherein the plurality of views are configured to organize modes of content into different views.

5. The user interface of claim **3**, wherein the web content mode is configured to display web based content for proximal viewing by a user on the display component of the computer system, wherein the channel content mode is configured to display web based content for non-proximal viewing by a user on the display component, wherein the media content mode is configured to display media based content for non-proximal viewing by a user on the display component, wherein the application content mode is configured to display computer applications for use by a user on the display component, wherein the communication content mode is configured to display computer configuration operations for viewing by a user on the display component, and wherein the passive content mode is configured to display web based content for non-proximal viewing without user interaction on the display component.

6. The user interface of claim **3**, wherein the plurality of views includes a home view configured to organize a plurality of content modes and a channel view configured to organize at least one content mode including the at least some of the plurality of visual representations having the view state of the respective computer content.

7. The user interface of claim **3**, wherein the plurality of views includes a screen saver view configured to organize selected content modes for passive viewing.

8. The user interface of claim **1**, wherein the plurality of views includes the home view organizing a plurality of visual representations of digital content, wherein the first home view is displayed responsive to system activation, and wherein the first home view is displayed responsive to a computer system configuration.

9. The user interface of claim **8**, wherein the computer system configuration comprises a physical positioning of the display component relative to a base of the computer system about a longitudinal axis of rotation.

10. The user interface of claim **8**, further comprising a search tool displayed in the header display, wherein the search tool is configured to accept search terms entered by a user and in response to execution, causes the computer system to navigate to a view of a first visual representation of digital content, wherein the digital content includes a search engine, and the search engine presents results for the search terms.

11. The user interface of claim **1**, further comprising a storage component configured to retain a previous view state.

12. The user interface of claim **11**, wherein the execution component is further configured to cause the computer system to transition to a previous view in response to execution of a navigation element by a user.

13. The user interface of claim **11**, further comprising the navigation element displayed in the header display.

14. The user interface of claim **8**, wherein the body display comprises an organization of the plurality of visual representations of computer content rendered on the computer display, and the home view further comprises display pages in response to a display threshold establishing a maximal number of visual representations displayed per display page.

15. The user interface of claim **14**, wherein the first home view further comprises an indication of visual representations displayed on adjacent display pages of the home view, wherein the indication is displayed within the body of the home view.

16. The user interface of claim **8**, further comprising a nascent card displayed in the body of the first home view, wherein the nascent card is configured to permit generation of additional visual representations of digital content.

17. The user interface of claim **16**, wherein the execution component is further configured to execute a process for creating a visual representation in response to execution of the nascent card, wherein the process for creating a visual representation includes acts of:

transitioning to a quick access view;

generating a mapping to online digital content;

executing the mapping; and

displaying a first view of the mapped digital content.

18. The user interface of claim **1**, further comprising a quick access view, wherein the quick access view is configured to permit user generation of a mapping between digital content and a visual representation.

19. The user interface of claim **3**, wherein the plurality of views includes a channel view, and the view selector component is further responsive to an integrated scroll wheel on the computer system.

20. The user interface of claim **19**, wherein the view selector component is further configured to transition the computer system to the channel view in response to manipulation of the integrated scroll wheel.

21. The user interface of claim **19**, wherein the channel view further comprises a channel selector comprising a display of a sequence of visual representations presenting a channel content mode.

22. The user interface of claim **21**, wherein the display of the sequence of visual representations is responsive to manipulation of the integrated scroll wheel, and manipulation of the integrated scroll wheel causes the computer system to render a next visual representation in the display of the sequence of visual representations.

23. The user interface of claim **1**, further comprising a storage component configured to retain a current computer system configuration state and a current view state.

24. The user interface of claim **23**, wherein the execution component is further configured to transition the display component between the plurality of views, responsive to at least one of the current computer system configuration state and the current view state.

25. The user interface of claim **24**, wherein the execution component is configured to transition to a channel view in response to manipulation of an integrated scroll wheel, when the computer system is in a laptop and an easel configuration.

26. The user interface of claim **24**, wherein the execution component is further configured to transition from the first view and a home view to a channel view in response to a change in computer system configuration state from a laptop to an easel configuration.

27. A method for presenting a customized user interface for a computer system with a plurality selectable I/O profiles to a user, the method comprising:

displaying a map based graphical user interface on a display component of the computer system, the act of displaying the map based user interface includes acts of:

displaying a plurality of views of a plurality of visual representations of computer content on the display component, wherein the computer content includes at least one of selectable digital content, executable computer applications, configurable computer settings, selectable computer operations and passive digital content; and

displaying the plurality of visual representations of computer content rendered on the display component, wherein the plurality of visual representations of computer content include an association to a first home view of the plurality of views, the first home view including the computer content, and wherein the each of the plurality of visual representations is responsive to focus and execution, wherein execution includes selecting the visual representation, and wherein the first home view is a first organizational view of at least one application and computer content displayed responsive to activation of the system; identifying, by a processor, at least a first and a second computer system configuration based on sensor input indicating a position of the display component relative to a base component;

selecting, by the processor, responsive to the sensor input, the first home view from the plurality of views for the first computer system configuration, wherein the first home view is configured to organize a first set of the plurality of visual representations;

filtering, by the processor, the first set of visual representations to present content that is optimized for viewing in

the second system configuration at least in part by identifying content to filter, removing the identified content from the first set of visual representations, and generating a second set of visual representations based on the filtered first set of visual representations, wherein the second set of visual representations includes at least one different member than the first set of visual representations; and

executing, automatically by the processor, in response to sensor input a transition in the display component between at least the first home view of the plurality of views and a second default content view of the plurality of views, wherein the second default content view is configured to organize the second set of visual representations, wherein the second default content view is a second organizational view of at least one application and computer content, wherein the sensor input indicates a transition to the second computer system configuration.

28. A system for presenting a customized user interface for a portable computer with a plurality selectable I/O profiles, the system comprising:

at least one processor operatively connected to a memory, the processor configured to execute a plurality of system components, the plurality of system components comprising:

a first user interface component configured to display a plurality of views of a plurality of visual representations of computer content, wherein the computer content includes at least one of selectable digital content, executable computer applications, configurable computer settings, selectable computer operations and passive digital content;

a second user interface component configured to display the plurality of visual representations of computer content on a computer display, wherein the plurality of visual representations of computer content include an association to a first home view of the plurality of views, the first home view including the computer content, and wherein the each of the plurality of visual representations is responsive to focus and execution, wherein execution includes selecting the visual representation, and wherein the first home view is a first organizational view of at least one application and computer content displayed responsive to activation of the system; and

an execution component configured to:

identify at least a first and a second computer system configuration based on sensor input indicating a position of the display component relative to a base component;

select, responsive to sensor input, a first home view from the plurality of views for the first computer system configuration, wherein the first home view is configured to organize a first set of the plurality of visual representations;

filter the first set of visual representations to present content that is optimized for viewing in the second system configuration at least in part by identifying content to filter, removing the identified content from the first set of visual representations, and generating a second set of visual representations based on the filtered first set of visual representations, wherein the second set of visual representations includes at least one different member than the first set of visual representations;

execute, automatically, in response to sensor input, a transition in the computer system display between at least the first home view of the plurality of views and a second default content view of the plurality of views, wherein the second default content view is a second organizational view of at least one application and computer content, wherein the second default content view is configured to organize the second set of visual representations, wherein the sensor input indicates a transition to the second computer system configuration.

29. The system of claim **28**, wherein the system further comprises a portable computer configurable between a plurality of display modes including a closed mode, a laptop mode and an easel mode, wherein the portable computer comprises:

a display component including a display screen;

a base;

a hinge assembly at least partially housed within the base and configured to pivotably couple the display component to the base;

wherein the display component is rotatable about a longitudinal axis running along an interface between the display component and the base;

wherein, in the closed mode, the display screen is disposed substantially against the base;

wherein rotating the display component about the longitudinal axis up to approximately 180 degrees from the closed mode configures the portable computer into the laptop mode; and

wherein rotating the display component about the longitudinal axis beyond approximately 180 degrees from the closed mode configures the portable computer into the easel mode.

30. The portable computer of claim **29**, wherein the single axis is a longitudinal axis running along an interface between the display component and the base; and wherein the display component is rotatable about the longitudinal axis.

31. The portable computer of claim **30**, further comprising a display orientation module configured to control an orientation of the content displayed on the display screen;

wherein the orientation of the content displayed on the display screen is configurable among a plurality of orientations relative to the longitudinal axis.

32. The portable computer of claim **31**, wherein the plurality of orientations comprises a first orientation relative to the longitudinal axis and a second orientation relative to the longitudinal axis; and

wherein when display orientation module is configured to automatically display the content in the first orientation when the portable computer is configured into the laptop mode and in the second orientation when the portable computer is configured into the easel mode.

33. The portable computer of claim **31**, wherein the plurality of display modes further comprises a flat mode in which the display component is disposed at an angle of approximately 180 degrees, measured about the longitudinal axis, relative to the base.

34. The portable computer of claim **33**, wherein the plurality of orientations comprises a first orientation relative to the longitudinal axis, a second orientation relative to the longitudinal axis, and a third orientation relative to the longitudinal axis; and

wherein, in the flat mode, the orientation of the content displayed on the display screen is configurable among the first, second and third orientations responsive to a user input.

35. The portable computer of claim **34**, wherein the second orientation is 90 degrees relative to the first orientation; and

wherein the third orientation is 180 degrees relative to the first orientation.

36. The portable computer of claim **31**, further comprising a mode sensor configured to detect a degree of rotation of the display component relative to the base and to provide information representative of the degree of rotation; and

wherein the display orientation module is configured to automatically adjust the orientation of the content displayed on the display screen responsive to the information from the mode sensor.

37. The portable computer of claim **36**, wherein the display orientation module is configured to:

automatically display the content in a first orientation relative to the longitudinal axis responsive to the information indicating that the degree of rotation of the display component is less than approximately 180 degrees relative to the base; and

automatically display the content in a second orientation relative to the longitudinal axis responsive to the information indicating that the degree of rotation of the display component is greater than approximately 180 degrees relative to the base;

wherein the second orientation is at approximately 180 degrees relative to the first orientation.

38. The portable computer of claim **31**, further comprising a mode sensor configured to detect a current display mode of the portable computer; and

wherein the display orientation module selects the orientation of the content displayed on the display screen from one of the plurality of orientations relative to the longitudinal axis responsive to the current display mode detected by the mode sensor.

39. The portable computer of claim **30**, wherein plurality of display modes further comprises a closed mode; and

wherein, in the closed mode, the display screen is disposed substantially against the base.

40. The portable computer of claim **39**, wherein rotating the display component about the longitudinal axis up to approximately 180 degrees from the closed mode configures the portable computer into the laptop mode; and

wherein rotating the display component about the longitudinal axis beyond approximately 180 degrees from the closed mode configures the portable computer into the easel mode.

41. The portable computer of claim **40**, wherein the display component is rotatable about the longitudinal axis up to approximately 320 degrees from the closed mode.

42. The portable computer of claim **30**, wherein the longitudinal axis comprises multiple parallel axes; and

wherein the hinge assembly is configured to permit rotation of the display component about any of the multiple parallel axes to configure the portable computer between the plurality of display modes.

43. The portable computer of claim **30**, further comprising a scroll wheel disposed at least partially within the base and rotatable about the longitudinal axis, the scroll wheel configured to permit a user to control at least one of operating parameters of the portable computer and the content displayed on the display screen.

44. The portable computer of claim **43**, further comprising a first navigation button disposed on one of the base and the display component and configured to permit the user to manipulate selected content displayed on the display screen.

45. The portable computer of claim **44**, wherein the display screen is configured to display at least one of a plurality of modes of content; and

wherein the navigation button is configured to permit the user to select for display one of the plurality of modes of content.

46. The portable computer of claim **44**, wherein the first navigation button is user-accessible in each of the laptop mode and the easel mode.

47. The portable computer of claim **44**, further comprising a second navigation button;

wherein the first navigation button is disposed on a major surface of the base; and

wherein the second navigation button is disposed on a minor surface of the base.

48. The portable computer of claim **43**, wherein the scroll wheel is configured to permit the user to select a mode of content for display on the display screen.

49. The portable computer of claim **43**, wherein the scroll wheel is configured to permit the user to control a volume of sound played by the portable computer.

50. The portable computer of claim **43**, further comprising a hinge assembly at least partially housed within the base and configured to rotatably couple the display component to the base.

51. The portable computer of claim **50**, wherein the scroll wheel is disposed at least partially within the hinge assembly.

52. The portable computer of claim **29**, further comprising:

a foot disposed along at least a portion of the base and configured to support the portable computer when in the easel mode.

53. The user interface of claim **1**, wherein the map based graphical user interface is further configured to organize computer operations and computer content into the plurality of visual representations having consistent appearance, the consistent appearance of the plurality of visual representations including a header portion and a body portion of a display.

54. The user interface of claim **53**, wherein the map based graphical user interface is further configured to organize at least some of the plurality of visual representations into displayed pages of at least one of the plurality of views of the map based user interface, wherein each display page is associated with a display limit for the visual representations.

55. The user interface of claim **1**, wherein a display of at least some of the visual representations is configured to increase in display size responsive to focus, relative to an unfocused display.

56. The user interface of claim **55**, wherein the display is further configured to render computer controls in a header portion in response to focus upon the header portion of the display.

57. The user interface of claim **8**, wherein the plurality of views includes the second default content view organizing a plurality of visual representations of digital content, wherein the second default content view is displayed responsive to system activation and responsive to the computer system configuration.

* * * * *

EXHIBIT F

US009880715B2

(12) **United States Patent**
Behar et al.

(10) **Patent No.: US 9,880,715 B2**
(45) **Date of Patent: *Jan. 30, 2018**

(54) **SYSTEM AND METHOD FOR STREAMLINING USER INTERACTION WITH ELECTRONIC CONTENT**

(71) Applicant: **LiTL LLC**, Boston, MA (US)

(72) Inventors: **Yves Behar**, Oakland, CA (US); **Joshua Morenstein**, San Francisco, CA (US); **Christopher Hibmacronan**, Oakland, CA (US); **Naoya Edahiro**, San Francisco, CA (US); **Matthew David Day**, San Francisco, CA (US); **Robert Sanford Havoc Pennington**, Asheville, NC (US); **Noah Bruce Guyot**, Mill Valey, CA (US); **Daniel Kuo**, San Francisco, CA (US); **Jenea Boshart Hayes**, Castro Valley, CA (US); **Aaron Tang**, Somerville, MA (US); **Donald Francis Fischer**, Charlestown, MA (US); **Christian Marc Schmidt**, Brooklyn, NY (US); **Lisa Strausfeld**, New York, NY (US); **David Livingstone Fore**, Oakland, CA (US); **John H. Chuang**, Brookline, MA (US); **Chris Bambacus**, Framington, MA (US); **Bart Haney**, Boston, MA (US); **Logan Ray**, Boston, MA (US); **Serge Beaulieu**, San Francisco, CA (US)

(73) Assignee: **LiTL LLC**, Boston, MA (US)

(*) Notice: Subject to any disclaimer, the term of this patent is extended or adjusted under 35 U.S.C. 154(b) by 168 days.

This patent is subject to a terminal disclaimer.

(21) Appl. No.: **14/680,422**

(22) Filed: **Apr. 7, 2015**

(65) **Prior Publication Data**

US 2015/0277688 A1 Oct. 1, 2015

Related U.S. Application Data

(63) Continuation of application No. 12/416,496, filed on Apr. 1, 2009, now Pat. No. 9,003,315, which is a

(Continued)

(51) **Int. Cl.**
G06F 3/048 (2013.01)
G06F 3/0484 (2013.01)

(Continued)

(52) **U.S. Cl.**
CPC ***G06F 3/0484*** (2013.01); ***G06F 1/162*** (2013.01); ***G06F 1/169*** (2013.01); ***G06F 1/1632*** (2013.01);

(Continued)

(58) **Field of Classification Search**
CPC G06F 3/0481–3/04847; G06F 17/2247–17/3089; G06F 1/1626; G06F 3/04886
See application file for complete search history.

(56) **References Cited**

U.S. PATENT DOCUMENTS

3,468,576 A 9/1969 Beyer et al.
4,939,514 A 7/1990 Miyazaki

(Continued)

FOREIGN PATENT DOCUMENTS

CN 1292112 A 4/2001
CN 1926496 A 3/2007

(Continued)

OTHER PUBLICATIONS

Miller, M., "Creating a Digital Home Entertainment System with Windows Media Center", Apr. 2006, Que.*

(Continued)

Primary Examiner — Claudia Dragoescu
(74) *Attorney, Agent, or Firm* — Wolf, Greenfield & Sacks, P.C.

(57) **ABSTRACT**

Various aspects and embodiments are directed to a graphical user interface that organizes interface elements into views of computer content for presentation to a user. Different views of are used to provide an interface that is responsive to

(Continued)

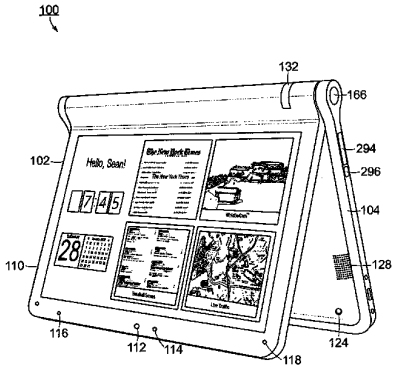

configurations of the device and activities performed by the user. Aspects include permitting the user to transition the device from one configuration to another during its use. The elements that comprise the graphical user interface are configured to present a summarized view of available actions and content to simplify user interaction. The different views present different organizations of the interface elements and in some examples display only certain modes of content in order to reduce the number of options a user must navigate. Methods and systems for streamlining user interaction with computer content are also provided. Streamlining includes, for example, pre-configuring a user device based on received information.

20 Claims, 56 Drawing Sheets

Related U.S. Application Data

continuation-in-part of application No. 12/170,939, filed on Jul. 10, 2008, now Pat. No. 8,289,688, said application No. 12/416,496 is a continuation-in-part of application No. 12/170,951, filed on Jul. 10, 2008, now Pat. No. 8,624,844.

(60) Provisional application No. 61/041,365, filed on Apr. 1, 2008.

(51) **Int. Cl.**

G06F 1/16	(2006.01)
G06F 3/0362	(2013.01)
G06F 17/30	(2006.01)
H04L 29/08	(2006.01)

(52) **U.S. Cl.**
CPC ***G06F 1/1677*** (2013.01); ***G06F 3/0362*** (2013.01); ***G06F 17/30905*** (2013.01); ***H04L 67/02*** (2013.01); ***H04L 67/10*** (2013.01)

(56) **References Cited**

U.S. PATENT DOCUMENTS

D333,636	S	3/1993	Issa
5,200,913	A	4/1993	Hawkins et al.
5,268,817	A	12/1993	Miyagawa et al.
5,436,954	A	7/1995	Nishiyama et al.
5,515,345	A	5/1996	Barreira et al.
5,547,698	A	8/1996	Lansbergen et al.
5,661,632	A	8/1997	Register
5,708,561	A	1/1998	Huilgol et al.
5,712,760	A	1/1998	Coulon et al.
D391,927	S	3/1998	Faranda et al.
D392,944	S	3/1998	Issa
D395,868	S	7/1998	Iino
5,790,371	A	8/1998	Latocha et al.
5,793,355	A	8/1998	Youens
5,796,575	A	8/1998	Podwalny et al.
D399,526	S	10/1998	Brady
5,825,352	A	10/1998	Bisset et al.
5,841,631	A	11/1998	Shin et al.
5,847,698	A	12/1998	Reavey et al.
5,900,848	A	5/1999	Haneda et al.
5,926,364	A	7/1999	Karidis
5,949,643	A	9/1999	Batio
D416,003	S	11/1999	Schiefer et al.
5,987,704	A	11/1999	Tang
6,005,767	A	12/1999	Ku et al.
6,067,224	A	5/2000	Nobuchi
6,094,191	A	7/2000	Watanabe et al.
6,097,389	A	8/2000	Morris et al.
6,137,468	A	10/2000	Martinez
6,144,358	A	11/2000	Narayanaswamy et al.
6,154,359	A	11/2000	Kamikakai et al.
6,222,507	B1	4/2001	Gouko
6,223,393	B1	5/2001	Knopf
6,262,885	B1	7/2001	Emma et al.
6,266,236	B1	7/2001	Ku et al.
6,275,376	B1	8/2001	Moon
6,295,038	B1	9/2001	Rebeske
6,302,612	B1	10/2001	Fowler et al.
6,323,846	B1	11/2001	Westerman et al.
D452,238	S	12/2001	Sugano et al.
6,327,482	B1	12/2001	Miyashita
6,341,061	B1	1/2002	Eisbach et al.
6,343,006	B1	1/2002	Moscovitch et al.
6,377,444	B1	4/2002	Price et al.
D462,069	S	8/2002	Gatto
6,437,974	B1	8/2002	Liu
D463,797	S	10/2002	Andre et al.
6,464,195	B1	10/2002	Hildebrandt
6,492,974	B1	12/2002	Nobuchi et al.
6,493,216	B1	12/2002	Lin
6,510,049	B2	1/2003	Rosen
D476,326	S	6/2003	Tanimura
6,597,384	B1	7/2003	Harrison
D479,708	S	9/2003	Hwang et al.
6,628,267	B2	9/2003	Karidis et al.
6,642,909	B1	11/2003	Oliva
6,659,516	B2	12/2003	Wang et al.
6,661,426	B1	12/2003	Jetha et al.
6,665,175	B1	12/2003	deBoer et al.
6,693,652	B1	2/2004	Barrus et al.
6,697,055	B1	2/2004	Bullister
D491,177	S	6/2004	Andre et al.
D491,936	S	6/2004	Jao
D494,162	S	8/2004	Kondo
6,771,494	B2	8/2004	Shimano
D495,674	S	9/2004	Yoo et al.
D495,694	S	9/2004	Chase et al.
6,788,527	B2	9/2004	Doczy et al.
6,819,304	B2	11/2004	Branson
6,829,140	B2	12/2004	Shimano et al.
6,859,219	B1	2/2005	Sall
D504,128	S	4/2005	Maskatia
6,882,335	B2	4/2005	Saarinen
6,944,012	B2	9/2005	Doczy et al.
6,963,485	B2	11/2005	Hong
D512,997	S	12/2005	Lee et al.
6,972,752	B2	12/2005	Nako et al.
D513,509	S	1/2006	Kawa
D516,552	S	3/2006	Iseki
D517,541	S	3/2006	Maskatia
D518,042	S	3/2006	Kanayama
7,035,665	B2	4/2006	Kido et al.
D523,429	S	6/2006	Lin
7,061,472	B1	6/2006	Schweizer et al.
7,072,179	B1	7/2006	Curran et al.
D528,541	S	9/2006	Maskatia
D528,993	S	9/2006	Wilson
7,138,962	B2	11/2006	Koenig
7,148,877	B2	12/2006	Chang et al.
D534,531	S	1/2007	Ogasawara
D535,292	S	1/2007	Shi et al.
7,164,432	B1	1/2007	Amemiya
7,187,364	B2	3/2007	Duarte et al.
D544,846	S	6/2007	Kindle et al.
7,239,508	B2	7/2007	Ferrucei
7,250,207	B1	7/2007	Heal et al.
7,366,994	B2	4/2008	Loui
7,382,607	B2	6/2008	Skillman
7,428,142	B1	9/2008	Ligtenberg et al.
7,433,179	B2	10/2008	Hisano et al.
D581,371	S	11/2008	Richmond
7,467,356	B2	12/2008	Gettman et al.
7,522,946	B2	4/2009	Im
D593,085	S	5/2009	Behar et al.
D593,086	S	5/2009	Behar et al.
D593,091	S	5/2009	Behar et al.
D605,635	S	12/2009	Edahiro et al.

(56) **References Cited**

U.S. PATENT DOCUMENTS

7,698,407	B2 *	4/2010	Mattox, Jr.	G06Q 10/00 709/220
7,756,928	B1	7/2010	Meenan et al.	
7,814,425	B1	10/2010	O'Shaugnessy et al.	
7,869,834	B2	1/2011	Seol et al.	
8,289,688	B2	10/2012	Behar et al.	
8,300,022	B2	10/2012	Brenneman	
8,464,161	B2	6/2013	Giles et al.	
8,577,957	B2	11/2013	Behar et al.	
8,612,888	B2	12/2013	Pennington et al.	
8,624,844	B2	1/2014	Behar et al.	
9,003,315	B2	4/2015	Behar et al.	
9,495,070	B2	11/2016	Pennington et al.	
9,563,229	B2	2/2017	Behar et al.	
2001/0032320	A1	10/2001	Abdelnur et al.	
2002/0005818	A1	1/2002	Bruzzone	
2002/0010707	A1	1/2002	Chang et al.	
2002/0021258	A1	2/2002	Koenig	
2002/0190947	A1	12/2002	Feinstein	
2003/0048595	A1	3/2003	Hsieh et al.	
2003/0080995	A1	5/2003	Tenenbaum et al.	
2003/0107603	A1	6/2003	Clapper	
2003/0109232	A1	6/2003	Park et al.	
2004/0001049	A1 *	1/2004	Oakley	G06F 1/1618 345/173
2004/0025993	A1	2/2004	Russell	
2004/0203535	A1	10/2004	Kim et al.	
2004/0207568	A1	10/2004	Ooshima et al.	
2004/0212602	A1	10/2004	Nako et al.	
2004/0228076	A1	11/2004	Clapper	
2005/0005241	A1	1/2005	Hunleth et al.	
2005/0010860	A1	1/2005	Weiss et al.	
2005/0018396	A1	1/2005	Nakajima et al.	
2005/0041378	A1	2/2005	Hamada et al.	
2005/0063145	A1	3/2005	Homer et al.	
2005/0071782	A1	3/2005	Barrett et al.	
2005/0083642	A1	4/2005	Senpuku et al.	
2005/0091596	A1	4/2005	Anthony et al.	
2005/0093868	A1	5/2005	Hinckley	
2005/0128695	A1	6/2005	Han	
2005/0134717	A1	6/2005	Misawa	
2005/0146845	A1	7/2005	Moscovitch	
2005/0210399	A1 *	9/2005	Filner	G06F 17/30905 715/767
2005/0221865	A1 *	10/2005	Nishiyama	G06F 3/0236 455/566
2005/0257400	A1	11/2005	Sommerer et al.	
2005/0282596	A1	12/2005	Park et al.	
2006/0015823	A1	1/2006	Chao et al.	
2006/0017692	A1	1/2006	Wehrenberg et al.	
2006/0123353	A1	6/2006	Matthews et al.	
2006/0126284	A1	6/2006	Moscovitch	
2006/0238439	A1	10/2006	Fuller et al.	
2006/0264243	A1	11/2006	Aarras	
2006/0268500	A1	11/2006	Kuhn	
2006/0271644	A1	11/2006	Yamaizumi et al.	
2006/0277167	A1	12/2006	Gross et al.	
2007/0073833	A1	3/2007	Roy et al.	
2007/0120762	A1	5/2007	O'Gorman	
2007/0138806	A1	6/2007	Ligtenberg et al.	
2007/0182663	A1	8/2007	Biech	
2007/0240076	A1	10/2007	Astala et al.	
2007/0242421	A1	10/2007	Goschin et al.	
2007/0247446	A1	10/2007	Orsley et al.	
2007/0296820	A1	12/2007	Lonn	
2008/0024388	A1	1/2008	Bruce	
2008/0024465	A1	1/2008	Hawkins et al.	
2008/0042987	A1	2/2008	Westerman et al.	
2008/0059888	A1 *	3/2008	Dunko	G06F 1/1613 715/744
2008/0062625	A1	3/2008	Batio	
2008/0074831	A1	3/2008	Lee et al.	
2008/0088602	A1	4/2008	Hotelling	
2008/0092039	A1	4/2008	Brockway et al.	
2008/0134093	A1	6/2008	Dharmarajan et al.	
2008/0158795	A1	7/2008	Aoki et al.	
2008/0174570	A1	7/2008	Jobs et al.	
2008/0209493	A1	8/2008	Choi et al.	
2008/0235594	A1	9/2008	Bhumkar et al.	
2008/0284738	A1	11/2008	Hovden et al.	
2009/0007001	A1	1/2009	Morin	
2009/0019383	A1	1/2009	Riley et al.	
2009/0019479	A1	1/2009	Kwak et al.	
2009/0150784	A1	6/2009	Denney et al.	
2009/0150826	A1	6/2009	Lyndersay et al.	
2009/0190295	A1	7/2009	Chin et al.	
2009/0193364	A1	7/2009	Jarrett et al.	
2009/0244012	A1	10/2009	Behar et al.	
2009/0244832	A1	10/2009	Behar et al.	
2009/0249244	A1	10/2009	Robinson et al.	
2009/0275366	A1	11/2009	Schilling	
2009/0300511	A1	12/2009	Behar et al.	
2009/0303205	A1	12/2009	Seibert	
2009/0303676	A1	12/2009	Behar et al.	
2009/0322790	A1	12/2009	Behar et al.	
2010/0174993	A1	7/2010	Pennington et al.	
2013/0141854	A1	6/2013	Behar et al.	
2014/0282263	A1	9/2014	Pennington et al.	

FOREIGN PATENT DOCUMENTS

DE	19952486	A1	5/2001
EP	0588210	A1	3/1994
EP	1316877	A1	6/2003
GB	2321982	A	8/1998
JP	5-197507	A	8/1993
JP	6090200	A	3/1994
JP	6-242853	A	9/1994
JP	6-259166	A	9/1994
JP	8-179851	A	7/1996
JP	10-111658	A	4/1998
JP	11-296259		10/1999
JP	2001-167211	A	6/2001
JP	2004-302179	A	10/2004
JP	2005-159741	A	6/2005
JP	2005-242436	A	9/2005
JP	2006-227409		8/2006
KR	1020000036647		6/2002
WO	WO 95/24007	A1	9/1995

OTHER PUBLICATIONS

http://laptop.org/en/laptop/start/ebook.shtml accessed on Sep. 29, 2008.

International Search Report from a commonly owned PCT application PCT/US09/39117.

Miller, M., "Creating a Digital Home Entertainment System with Windows Media Center" , Apr. 2006, Que.

Supplemental European Search Report from corresponding European Application No. 09755433 dated Mar. 25, 2011.

European Examination Report dated Jan. 17, 2017 in connection with European Application No. 09755433.1.

International Preliminary Report on Patentability dated Oct. 14, 2010 for International Application No. PCT/US2009/039117.

International Search Report and Written Opinion for International Application No. PCT/US2009/038599 dated Jun. 3, 2009.

European Examination Report dated Nov. 22, 2016 in connection with European Application No. 09727165.4.

Extended European Search Report dated Apr. 5, 2011 in connection with European Application No. 09755433.1.

Chinese Office Action dated Jul. 18, 2013 in connection with Chinese Application No. 200980117859.8.

European Communication dated Nov. 23, 2015 in connection to European Application No. 09727165.4.

Japanese Office Action dated Apr. 16, 2013 in connection with Japanese Application No. 2011-503058.

Japanese Office Action dated Dec. 4, 2012 in connection with Japanese Application No. 2011-503058 and partial English translation thereof.

(56) **References Cited**

OTHER PUBLICATIONS

Office Action dated Jun. 7, 2012, for U.S. No. 12/170,951.
Office Action L2039-700111 dated Apr. 4, 2011, for U.S. Appl. No. 12/170,951.
Canadian Office Action dated Aug. 18, 2017 in connection with Canadian Application No. 2719828.

* cited by examiner

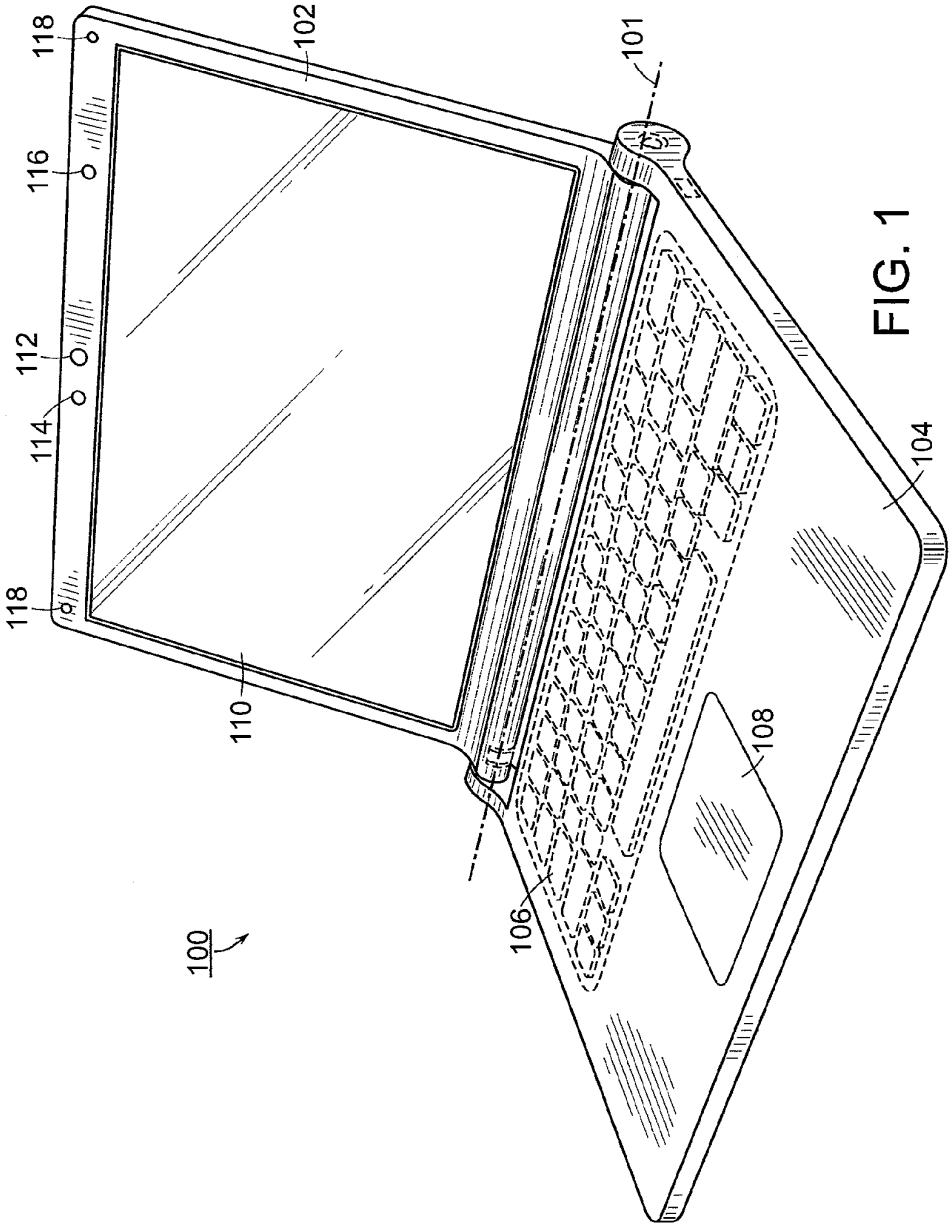

FIG. 1

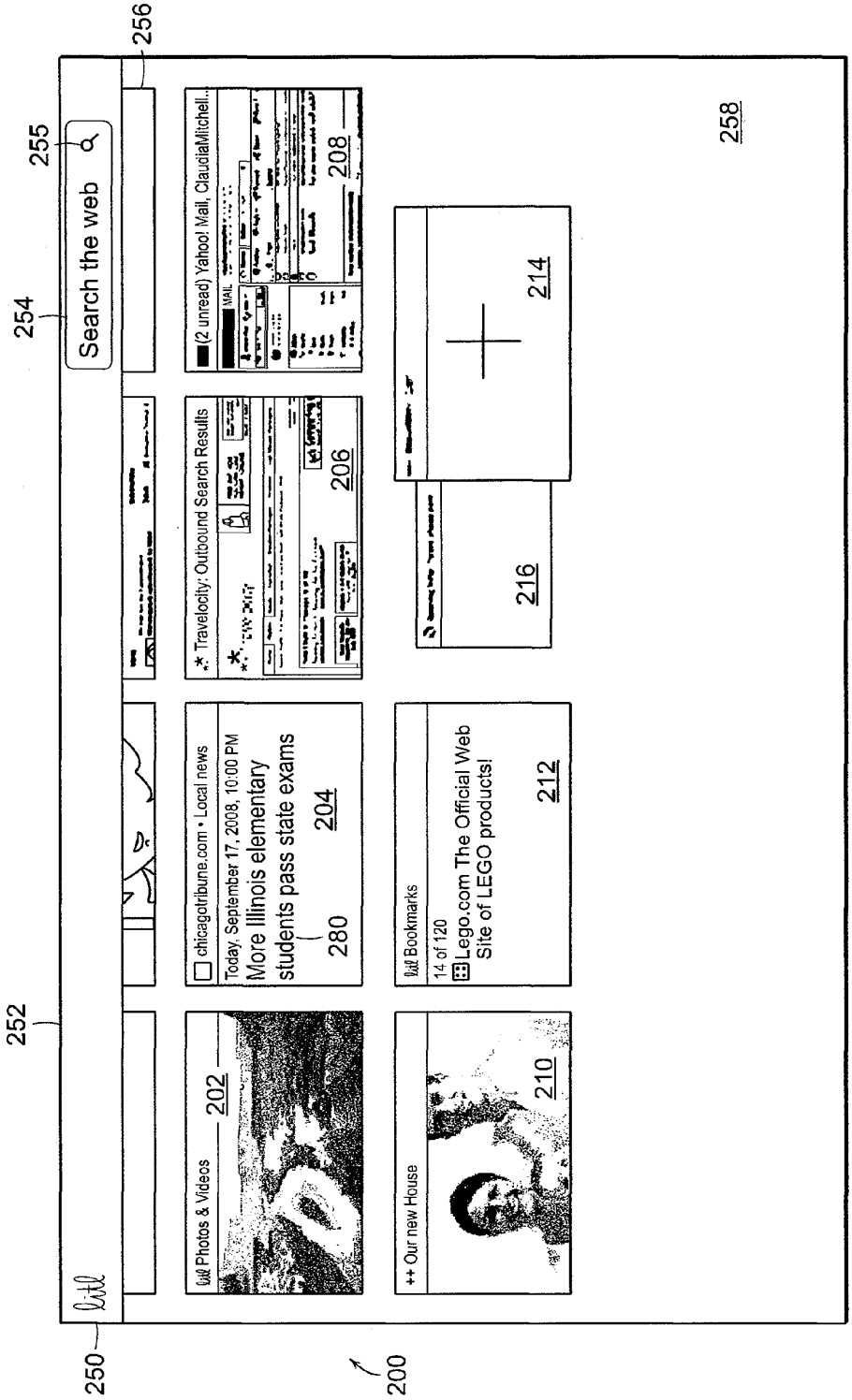
250
252
254
Search the web
255
256
Photos & Videos
202
chicagotribune.com • Local news
Today, September 17, 2008, 10:00 PM
More Illinois elementary students pass state exams
280
204
Travelocity: Outbound Search Results
206
(2 unread) Yahoo! Mail, ClaudiaMitchell...
208
++ Our new House
210
Bookmarks
14 of 120
Lego.com The Official Web Site of LEGO products!
212
214
216
258
200

FIG. 2

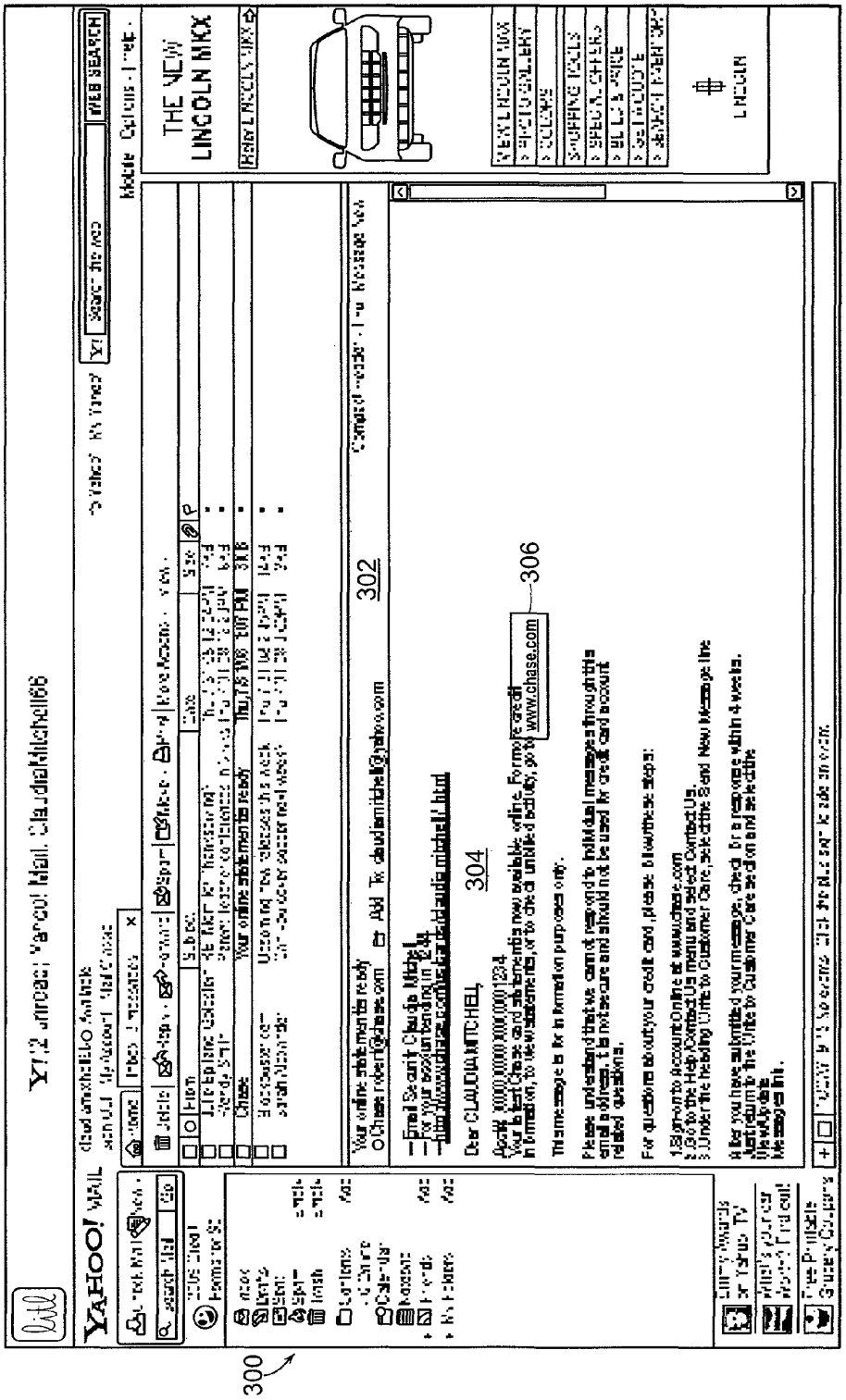

FIG. 3A

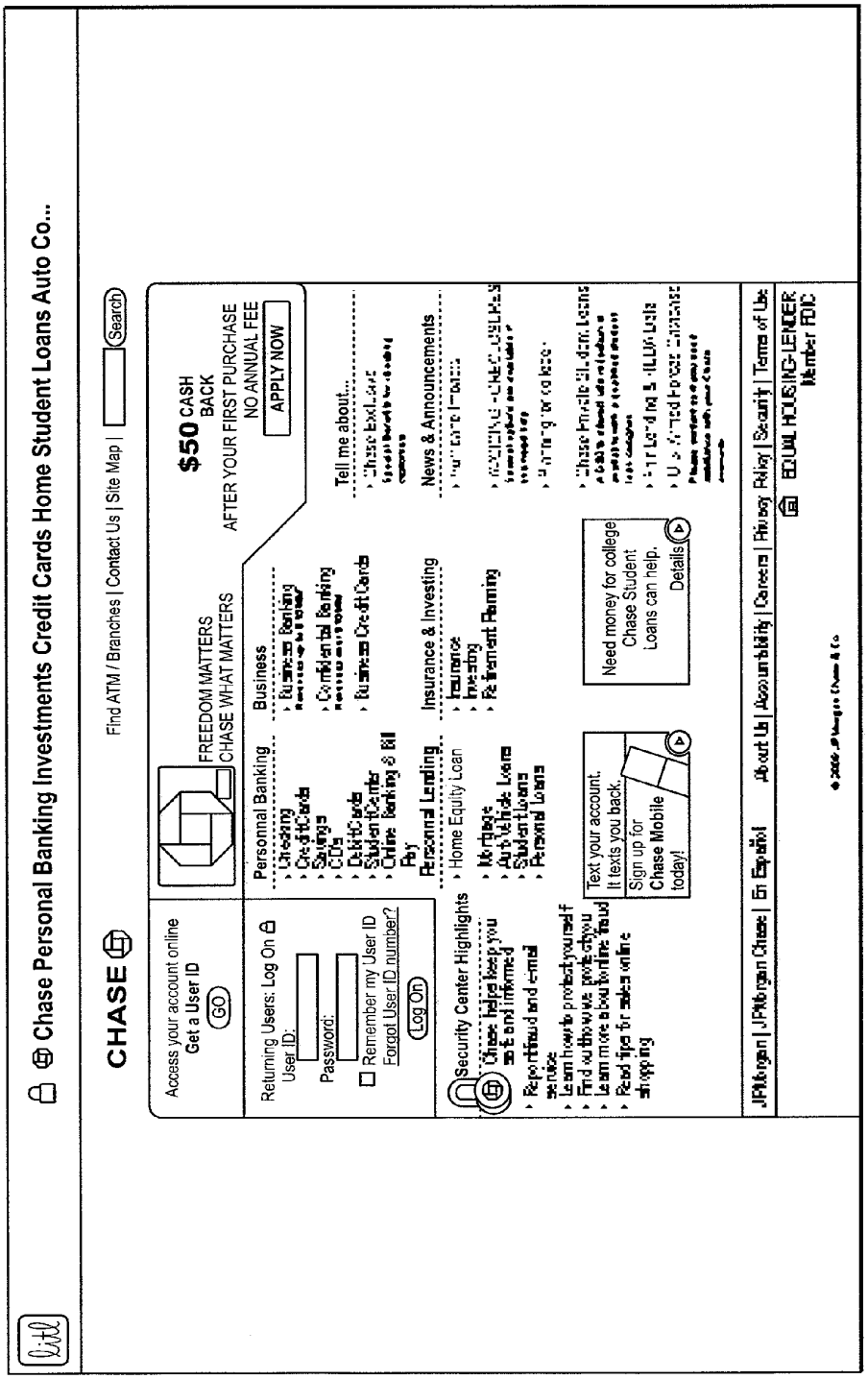
Chase Personal Banking Investments Credit Cards Home Student Loans Auto Co...
CHASE
Find ATM / Branches | Contact Us | Site Map |
Search
Access your account online
Get a User ID
GO
Returning Users: Log On
User ID:
Password:
Remember my User ID
Forgot User ID number?
Log On
Security Center Highlights
Personal Banking
Checking
Credit Cards
Savings
CDs
Debit Cards
Student Center
Online Banking & Bill Pay
Personal Lending
Home Equity Loan
Mortgages
Auto/Vehicle Loans
Student Loans
Personal Loans
Business
Business Banking
Confidential Banking
Business Credit Cards
Insurance & Investing
Insurance
Investing
Retirement Planning
FREEDOM MATTERS
CHASE WHAT MATTERS
$50 CASH BACK
AFTER YOUR FIRST PURCHASE
NO ANNUAL FEE
APPLY NOW
Tell me about...
News & Announcements
Text your account.
It texts you back.
Sign up for Chase Mobile today!
Need money for college
Chase Student Loans can help.
Details
JPMorgan | JPMorgan Chase | En Español
About Us | Accountability | Careers | Privacy Policy | Security | Terms of Use
EQUAL HOUSING LENDER
Member FDIC

FIG. 3B

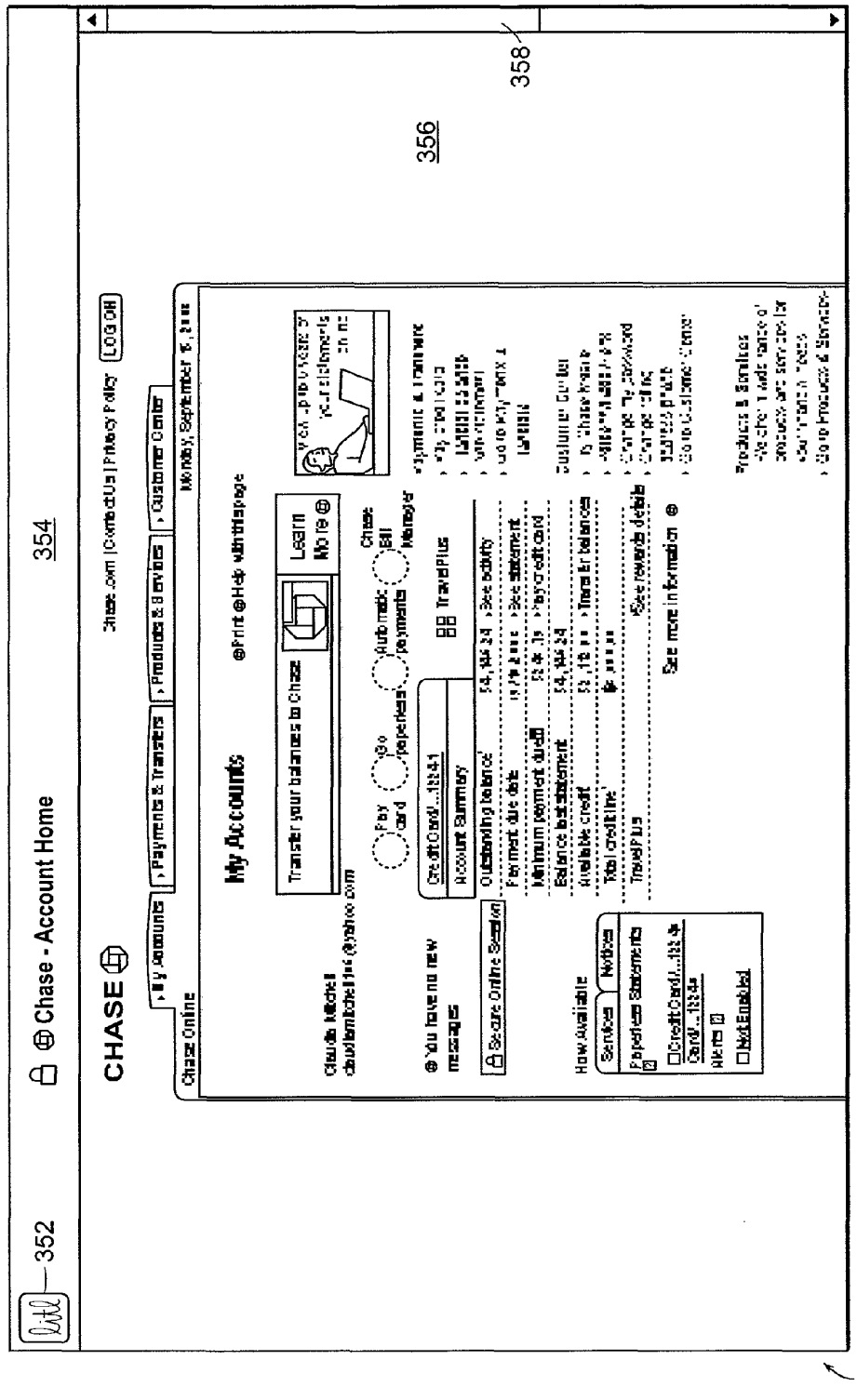
352
354
Chase - Account Home
CHASE
Chase.com | Contact Us | Privacy Policy
LOG OFF
My Accounts
Transfer your balances to Chase
Learn More
Pay Card
Go paperless
Automatic payments
Chase Bill Manager
Account Summary
Outstanding balance
Payment due date
Minimum payment due
Balance last statement
Available credit
Total credit line
TravelPlus
See activity
See statement
Pay credit card
See rewards details
See more information
Secure Online Session
You have no new messages
Services
Notices
Paperless Statements
Alerts
Not Enabled
356
358
350

FIG. 3C

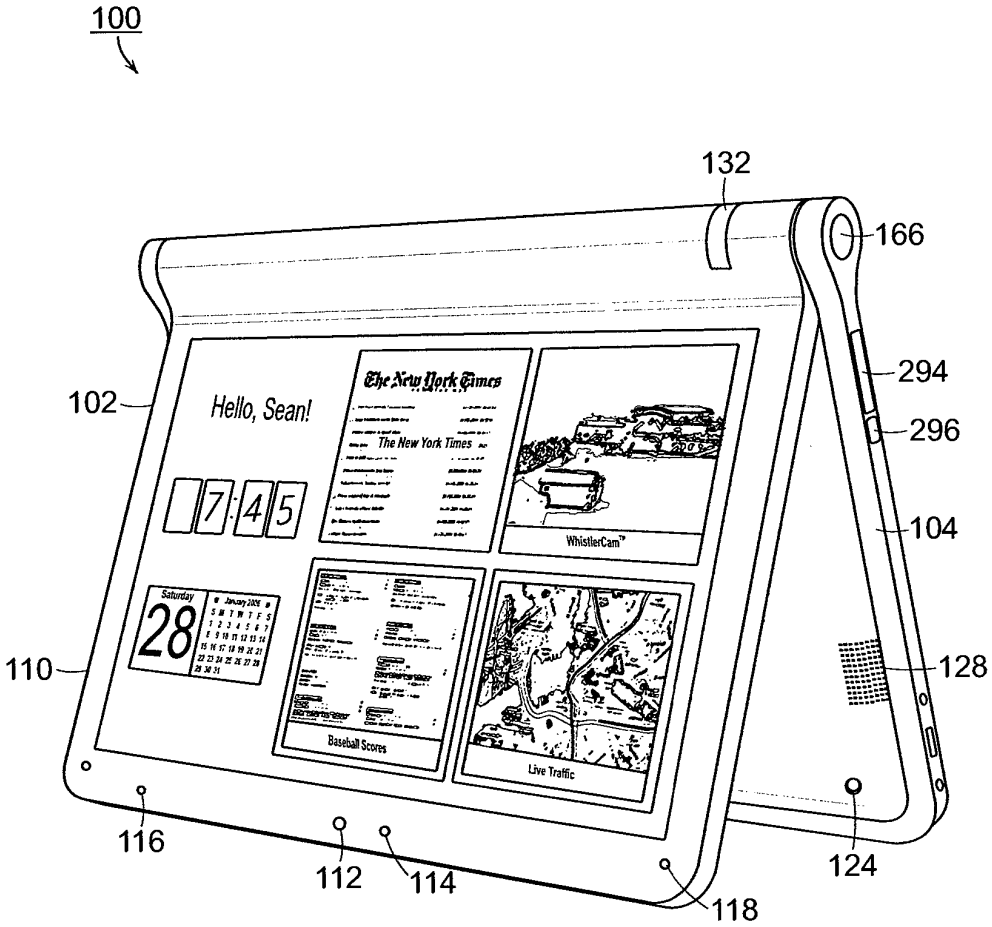
100
132
166
294
296
102
Hello, Sean!
The New York Times
7:45
WhistlerCam
104
Saturday
28
110
128
Baseball Scores
Live Traffic
116
112
114
118
124

FIG. 4

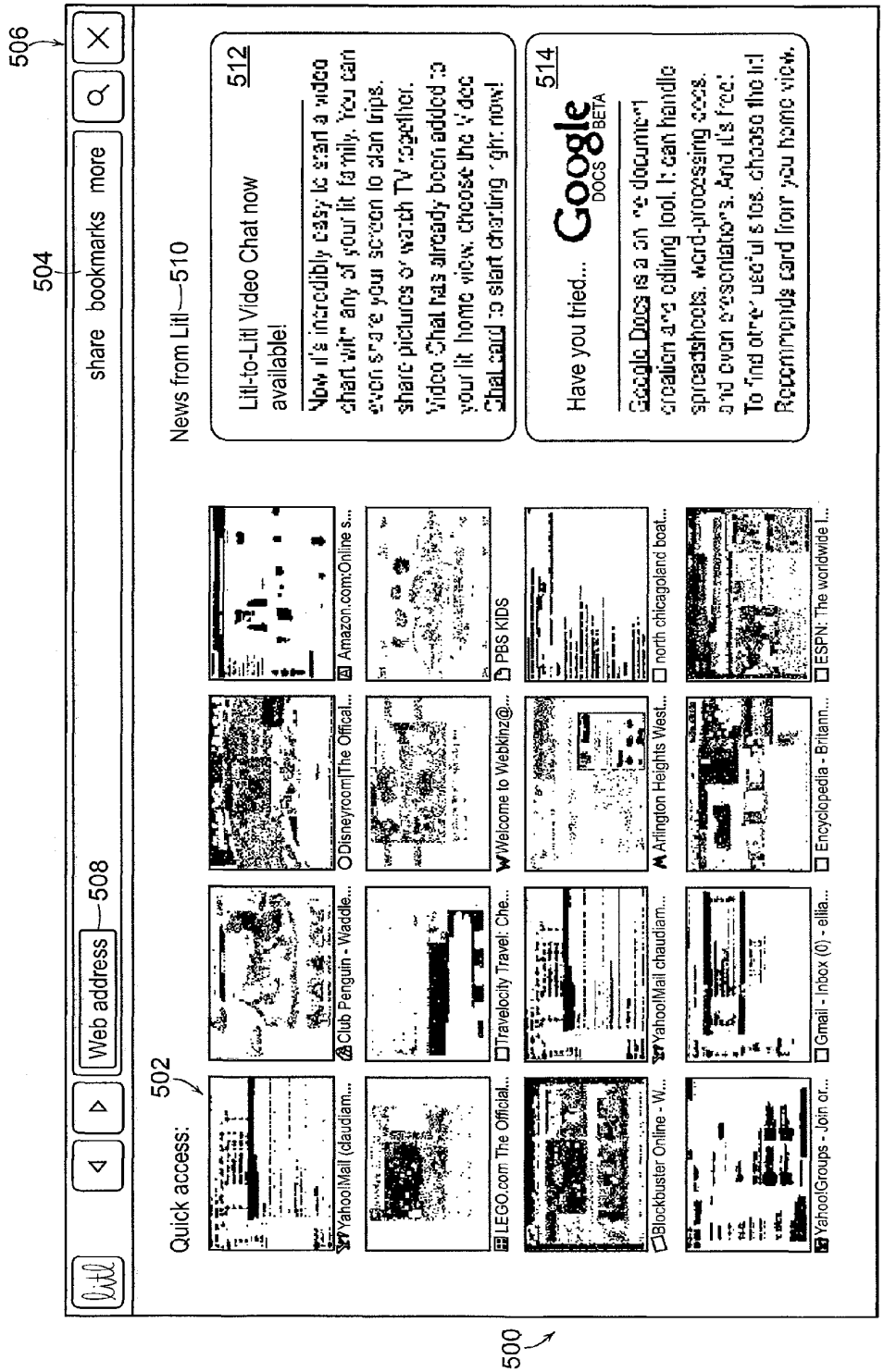
506
504
share bookmarks more
Web address
508
502
Quick access:
News from Litl
510
Litl-to-Litl Video Chat now available!
512
514
Have you tried...
Google
DOCS BETA
500

FIG. 5

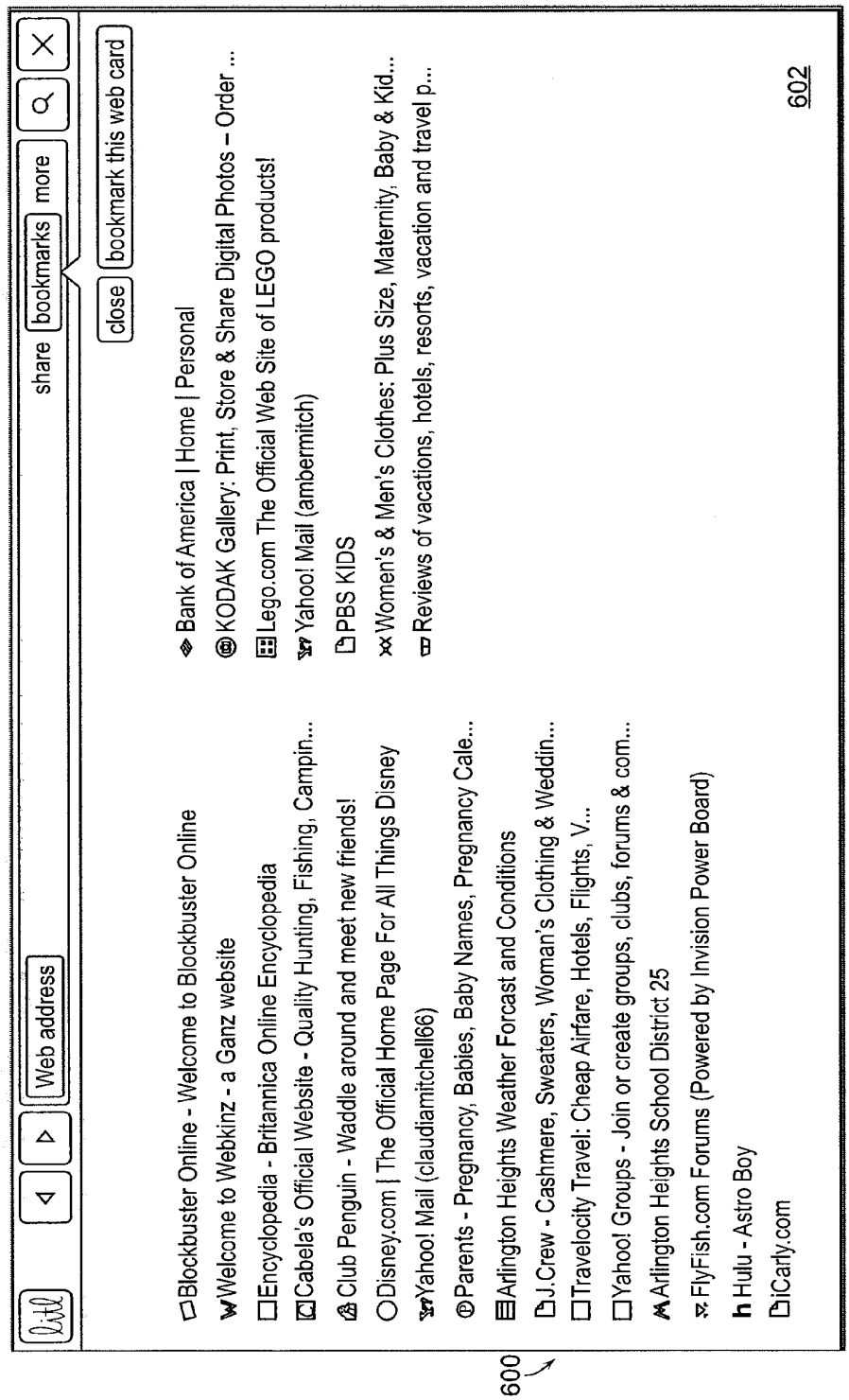
Web address
share
bookmarks
more
close
bookmark this web card
Blockbuster Online - Welcome to Blockbuster Online
Welcome to Webkinz - a Ganz website
Encyclopedia - Britannica Online Encyclopedia
Cabela's Official Website - Quality Hunting, Fishing, Campin...
Club Penguin - Waddle around and meet new friends!
Disney.com | The Official Home Page For All Things Disney
Yahoo! Mail (claudiamitchell66)
Parents - Pregnancy, Babies, Baby Names, Pregnancy Cale...
Arlington Heights Weather Forcast and Conditions
J.Crew - Cashmere, Sweaters, Woman's Clothing & Weddin...
Travelocity Travel: Cheap Airfare, Hotels, Flights, V...
Yahoo! Groups - Join or create groups, clubs, forums & com...
Arlington Heights School District 25
FlyFish.com Forums (Powered by Invision Power Board)
Hulu - Astro Boy
iCarly.com
Bank of America | Home | Personal
KODAK Gallery: Print, Store & Share Digital Photos – Order ...
Lego.com The Official Web Site of LEGO products!
Yahoo! Mail (ambermitch)
PBS KIDS
Women's & Men's Clothes: Plus Size, Maternity, Baby & Kid...
Reviews of vacations, hotels, resorts, vacation and travel p...
600
602

FIG. 6

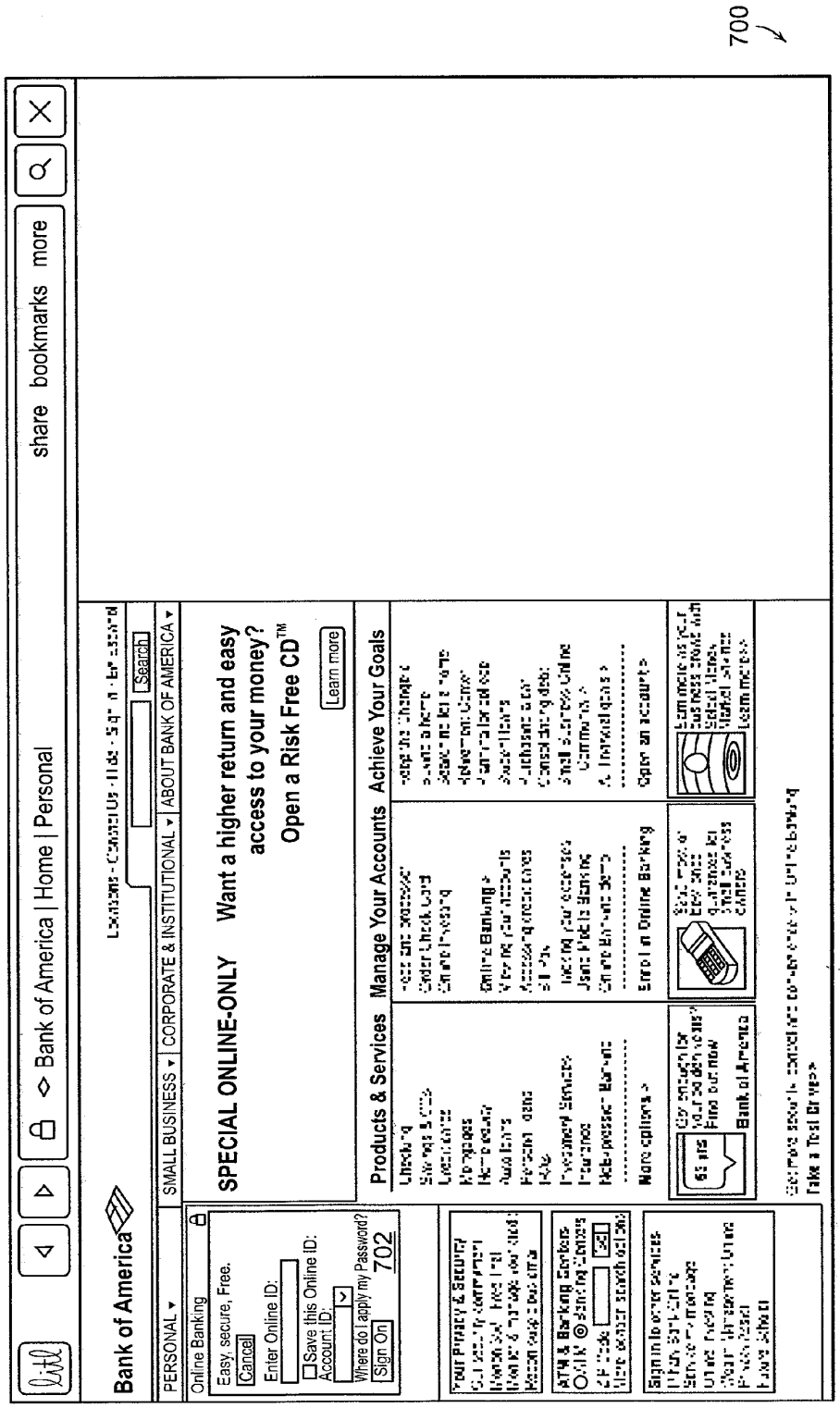
700
Bank of America | Home | Personal
share bookmarks more
Bank of America
PERSONAL
SMALL BUSINESS
CORPORATE & INSTITUTIONAL
ABOUT BANK OF AMERICA
Search
Online Banking
Easy, secure, Free.
Cancel
Enter Online ID:
Save this Online ID:
Account ID:
Where do I apply my Password?
Sign On
702
SPECIAL ONLINE-ONLY
Want a higher return and easy access to your money?
Open a Risk Free CD™
Learn more
Products & Services
Manage Your Accounts
Achieve Your Goals
Bank of America

FIG. 7A

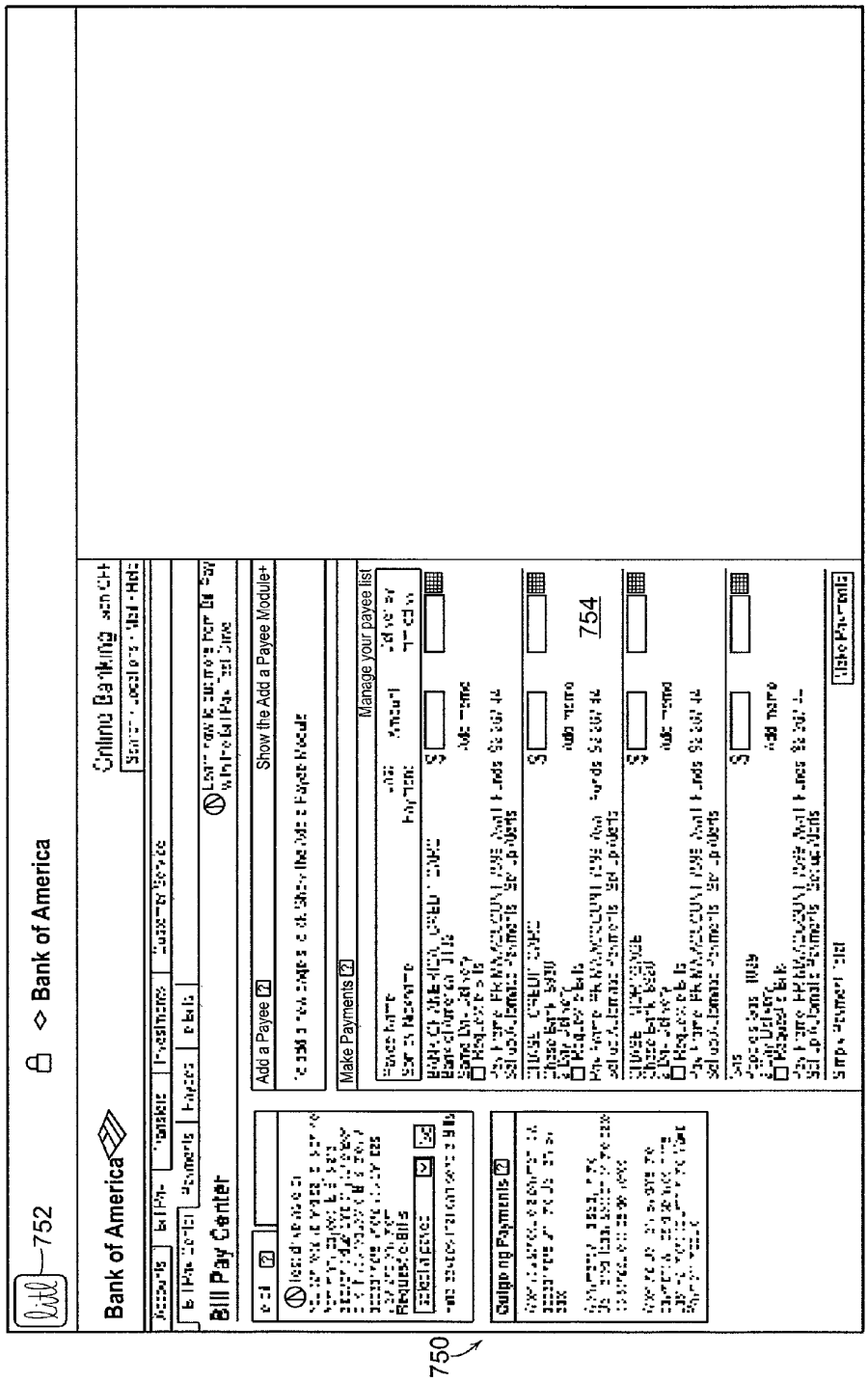
752
Bank of America
Online Banking
Bill Pay Center
Add a Payee
Show the Add a Payee Module+
Make Payments
Manage your payee list
Outgoing Payments
754
750

FIG. 7B

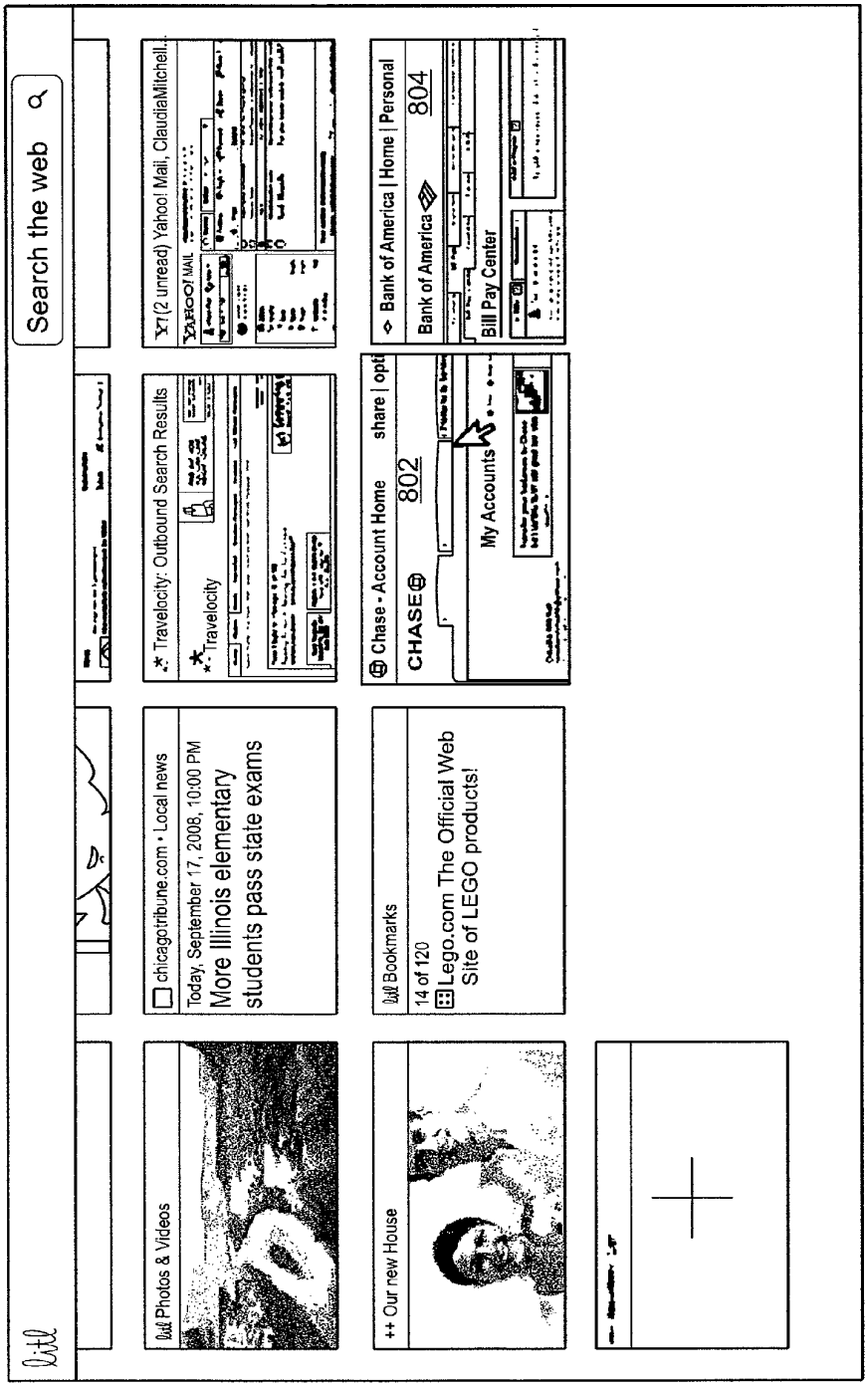
Search the web
Photos & Videos
chicagotribune.com • Local news
Today, September 17, 2008, 10:00 PM
More Illinois elementary students pass state exams
Travelocity: Outbound Search Results
Travelocity
(2 unread) Yahoo! Mail, ClaudiaMitchell...
Bookmarks
14 of 120
Lego.com The Official Web Site of LEGO products!
Chase • Account Home
share | opti
CHASE
802
My Accounts
Bank of America | Home | Personal
Bank of America
804
Bill Pay Center
++ Our new House

FIG. 8

800

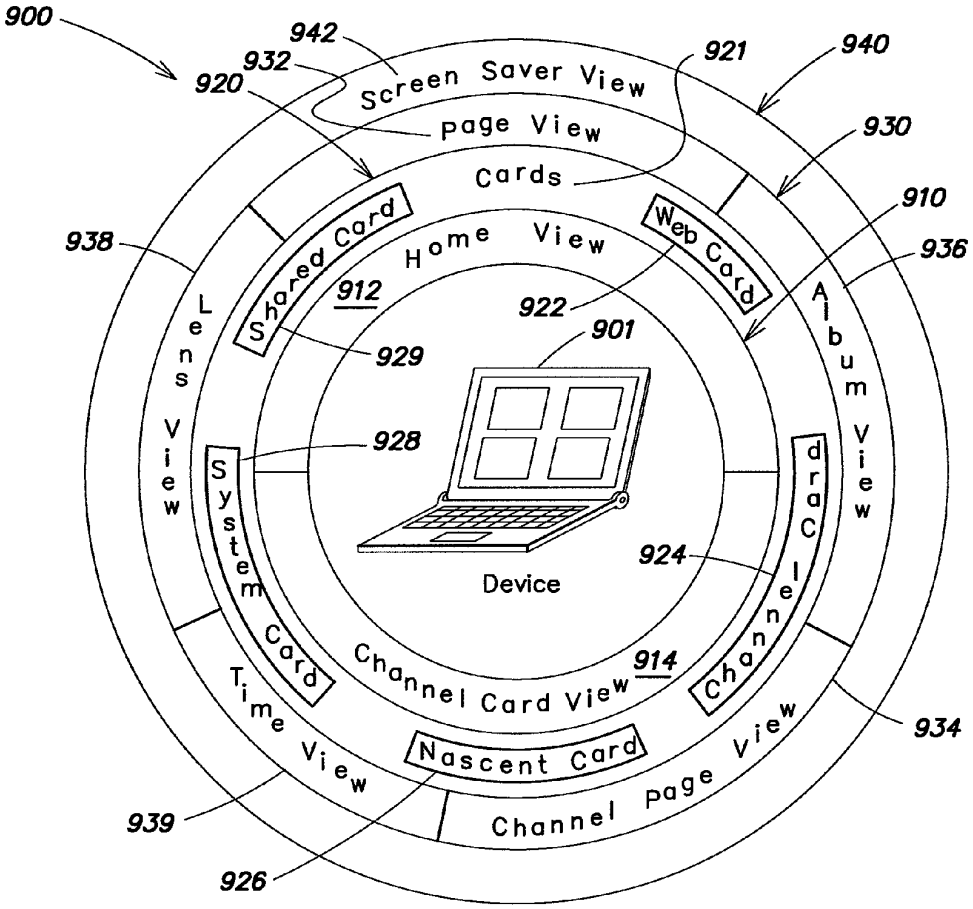
900
942
932
920
921
940
930
910
936
938
934
939
926
Screen Saver View
page View
Cards
Home View
Shared Card
Web Card
Lens View
Album View
Time View
Channel page View
Nascent Card
Channel Card View
Channel Card
System Card
912
922
901
929
928
924
914
Device

FIG. 9

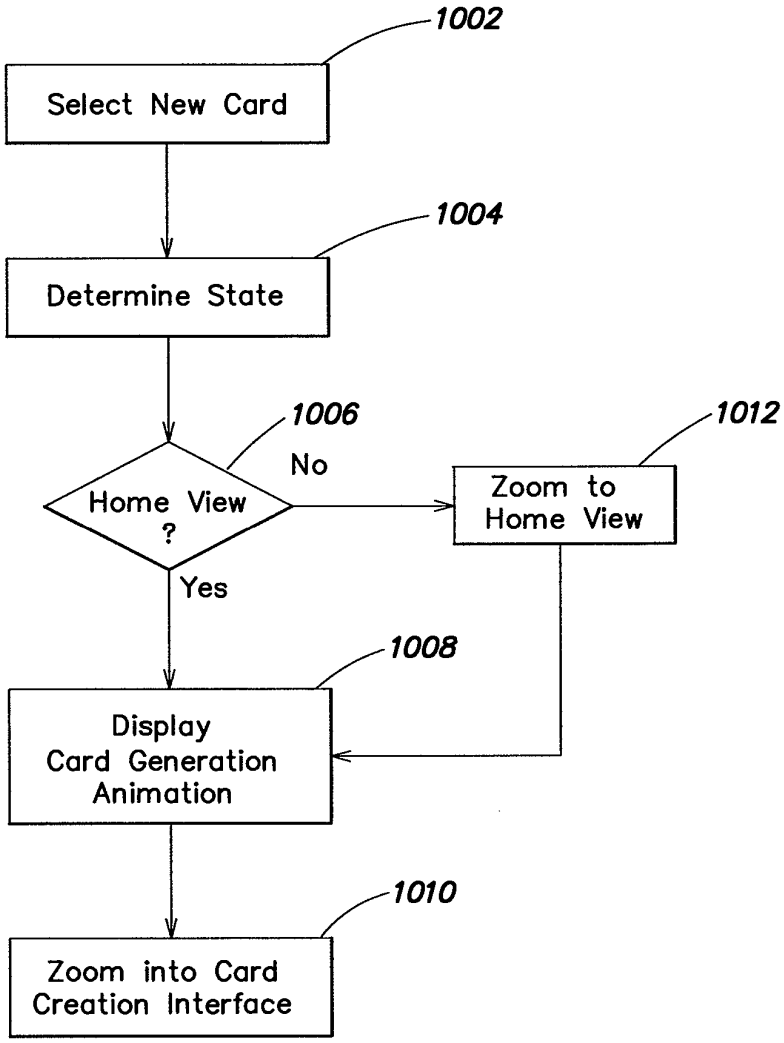
1002
Select New Card
1004
Determine State
1006
Home View ?
No
Yes
1012
Zoom to Home View
1008
Display Card Generation Animation
1010
Zoom into Card Creation Interface

FIG. 10

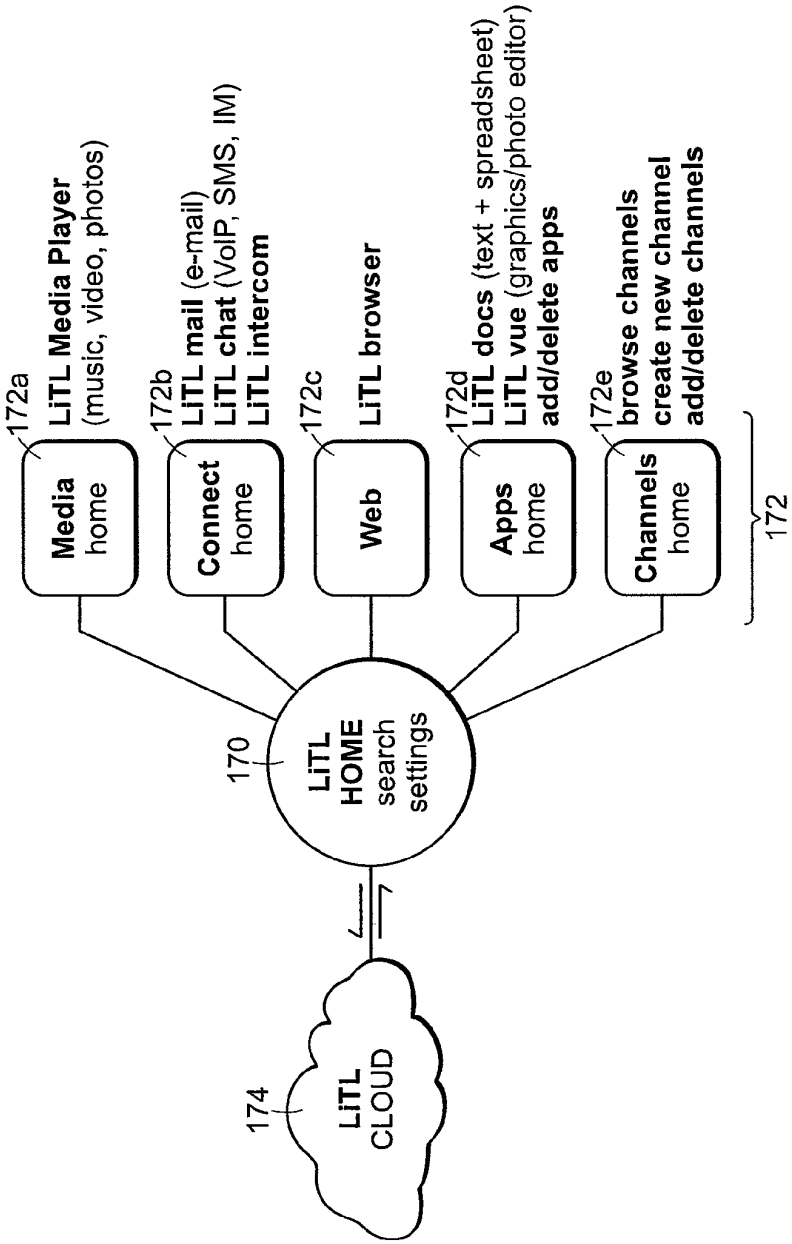
172a
Media
home
LiTL Media Player
(music, video, photos)
172b
Connect
home
LiTL mail (e-mail)
LiTL chat (VoIP, SMS, IM)
LiTL intercom
172c
Web
LiTL browser
172d
Apps
home
LiTL docs (text + spreadsheet)
LiTL vue (graphics/photo editor)
add/delete apps
172e
Channels
home
browse channels
create new channel
add/delete channels
172
170
LiTL
HOME
search
settings
174
LiTL
CLOUD

FIG. 11

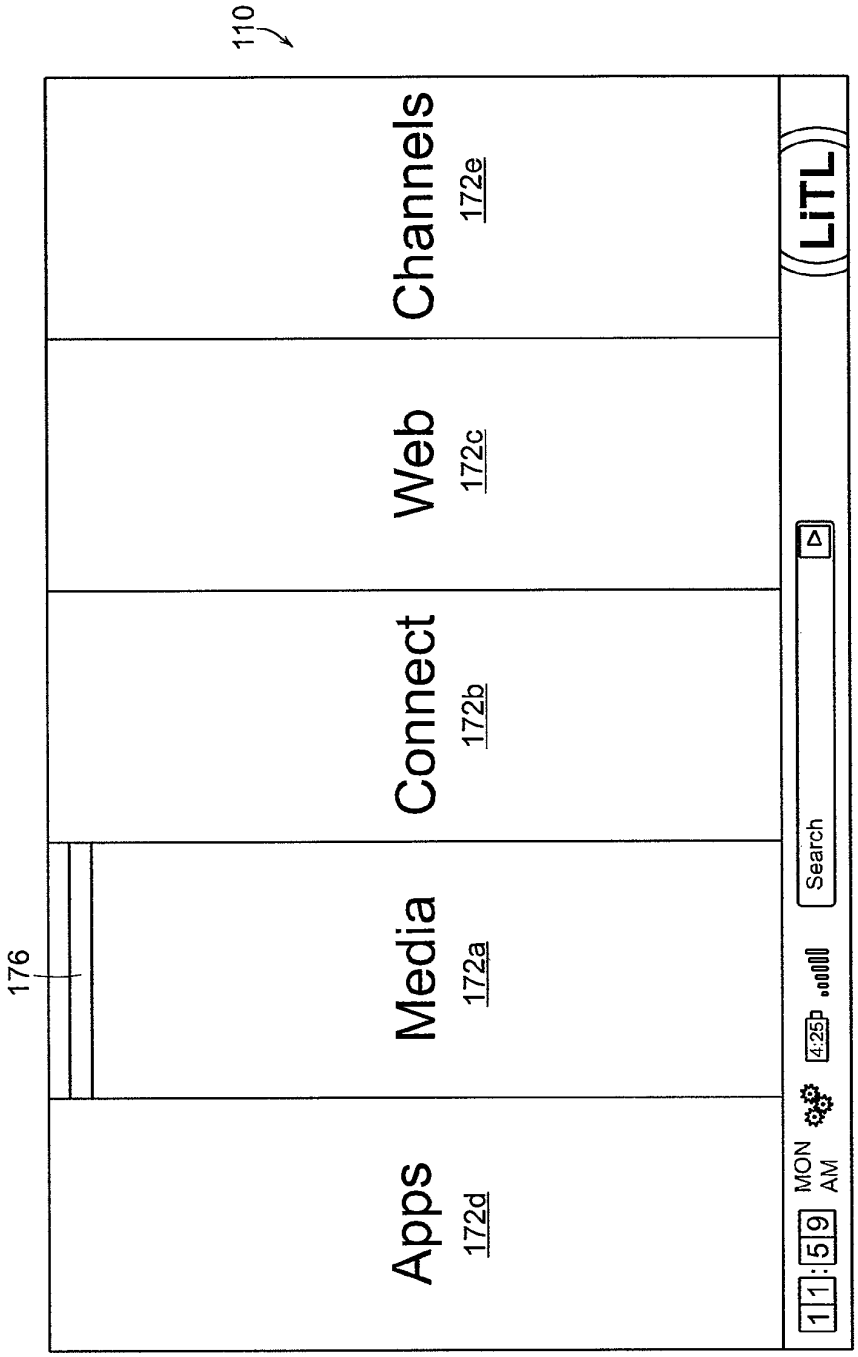
110
176
Apps
172d
Media
172a
Connect
172b
Web
172c
Channels
172e
11:59
MON
AM
4:25p
Search
LiTL

FIG. 12

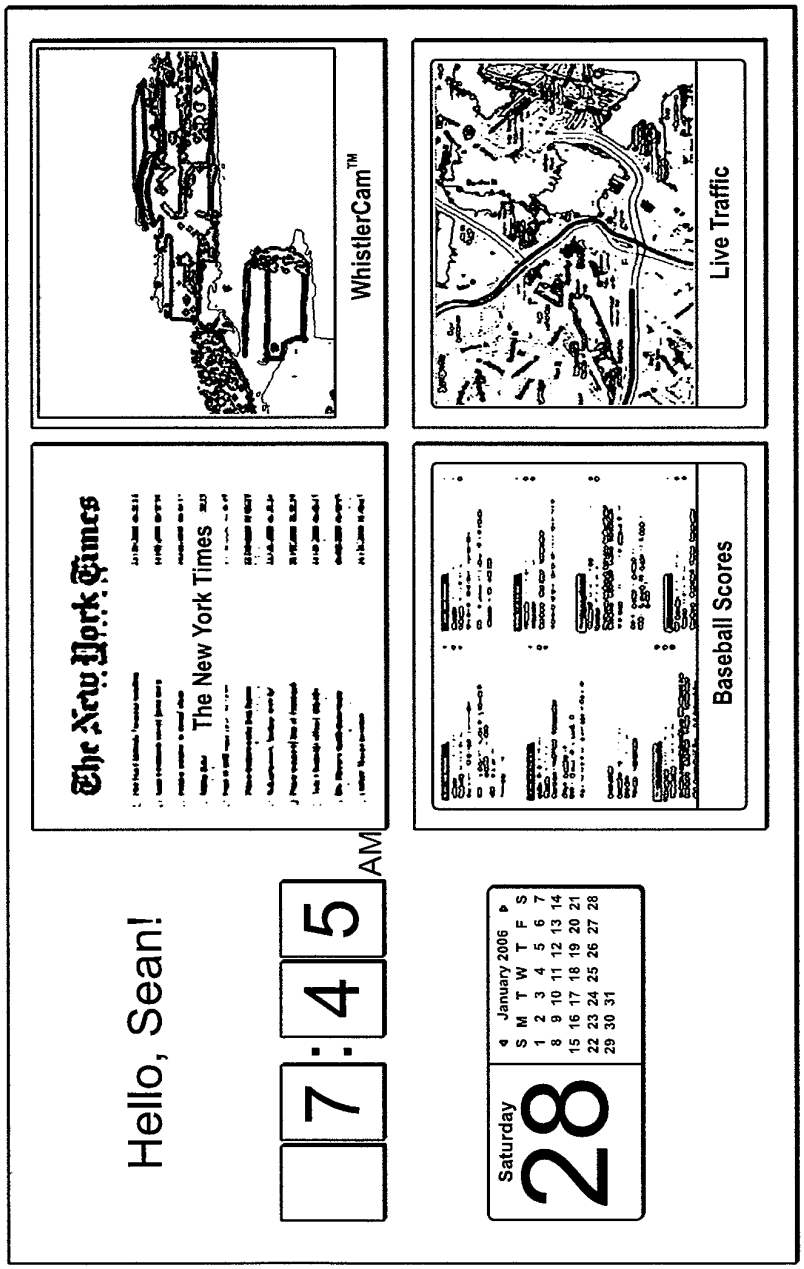
Hello, Sean!
7 : 4 5 AM
The New York Times
The New York Times
WhistlerCam™
Baseball Scores
Live Traffic
Saturday
28
January 2006
S M T W T F S
1 2 3 4 5 6 7
8 9 10 11 12 13 14
15 16 17 18 19 20 21
22 23 24 25 26 27 28
29 30 31
110

FIG. 13

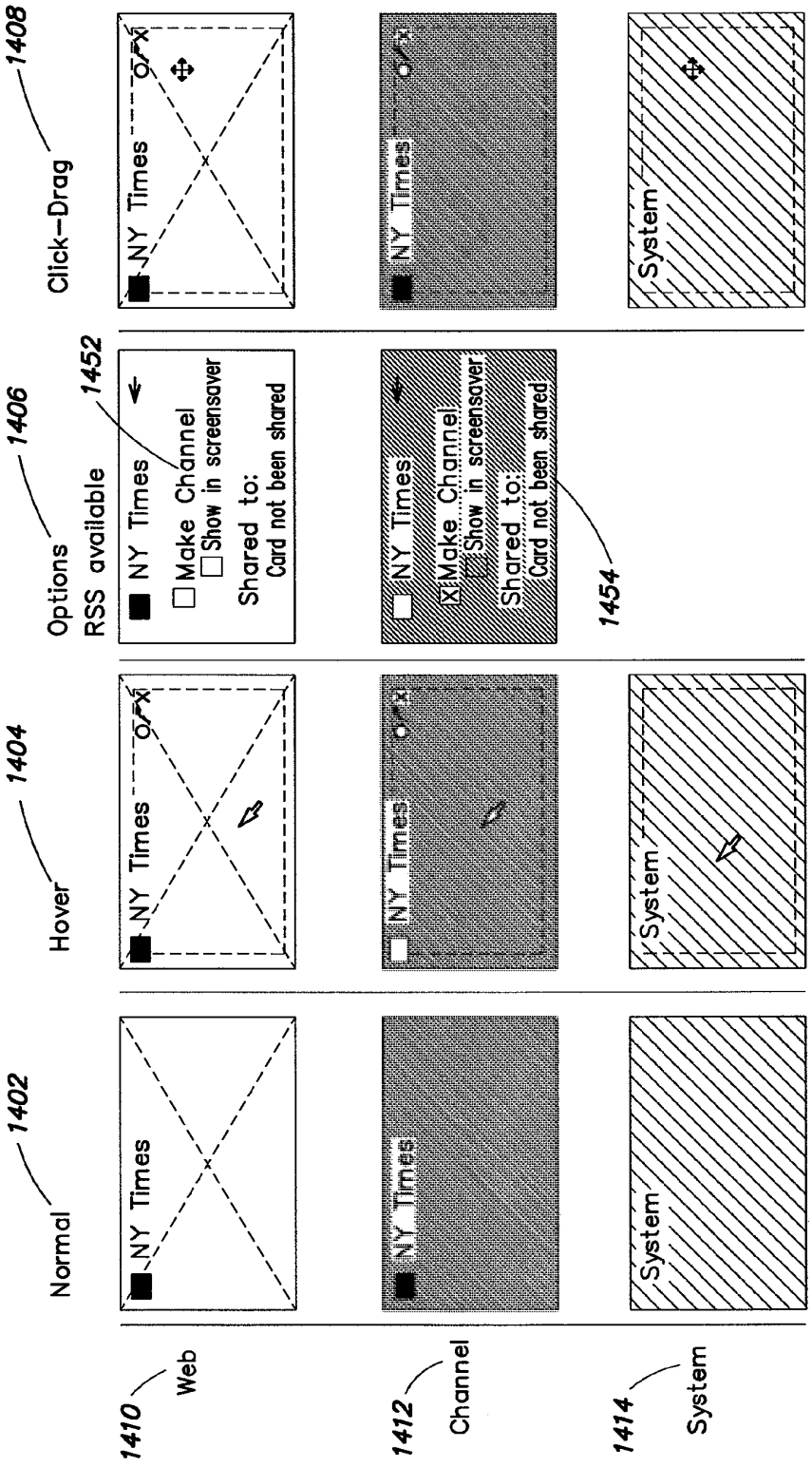
1402
Normal
1404
Hover
1406
Options
RSS available
1408
Click–Drag
1452
1454
NY Times
Make Channel
Show in screensaver
Shared to:
Card not been shared
System
1410
Web
1412
Channel
1414
System

FIG. 14

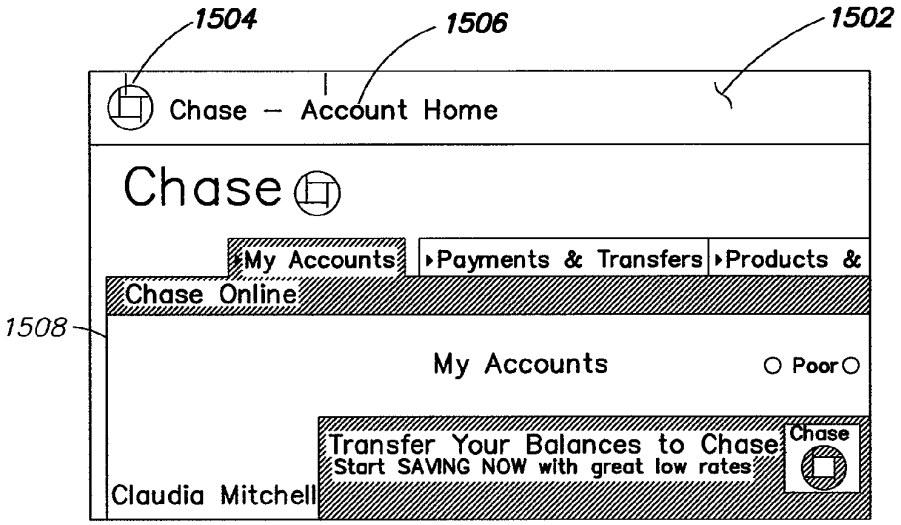

FIG. 15A

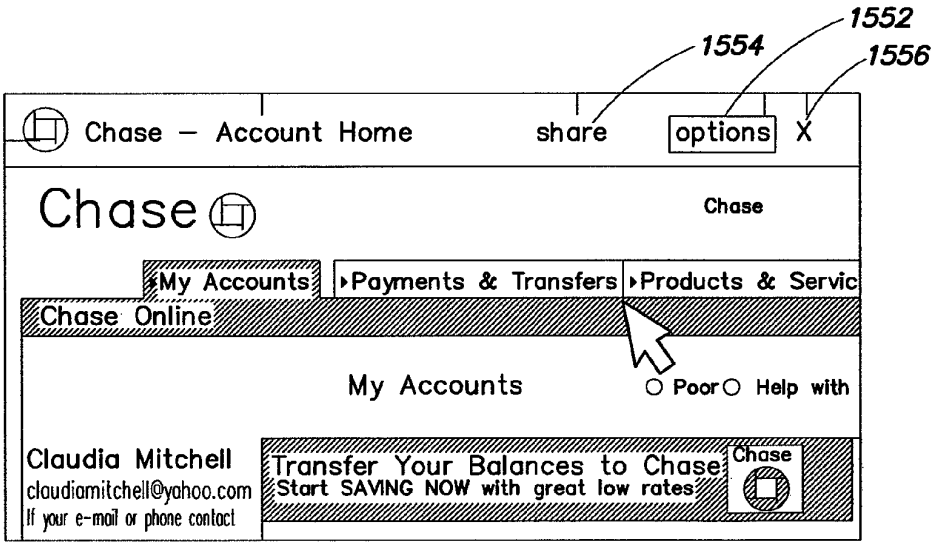

FIG. 15B

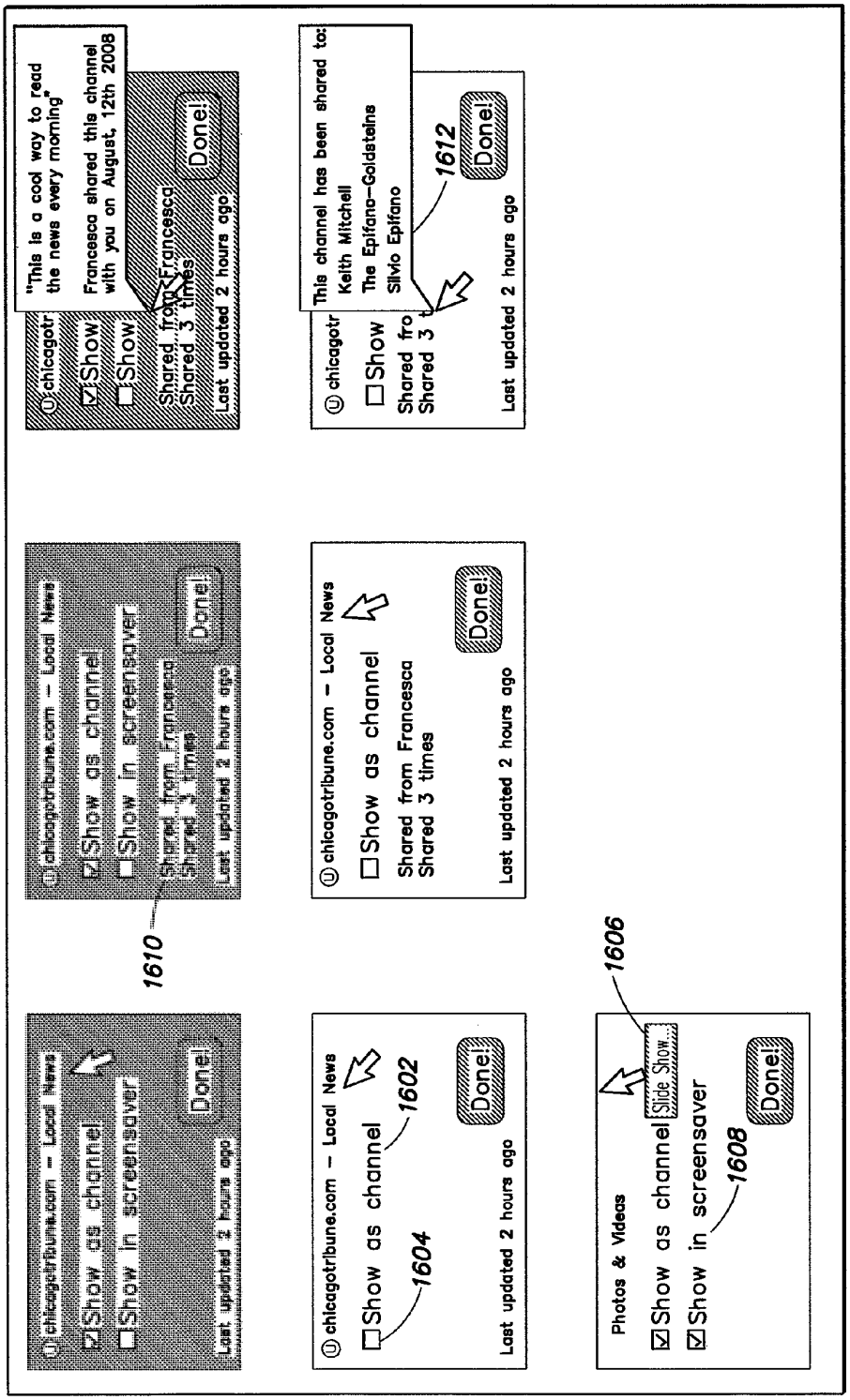
chicagotribune.com – Local News
Show as channel
Show in screensaver
Done!
Last updated 2 hours ago
1610
1602
1604
Photos & Videos
Slide Show...
1606
1608
1612
"This is a cool way to read the news every morning"
Francesca shared this channel with you on August, 12th 2008
Shared from Francesca
Shared 3 times
This channel has been shared to:
Keith Mitchell
The Epifano–Goldsteins
Silvio Epifano

FIG. 16

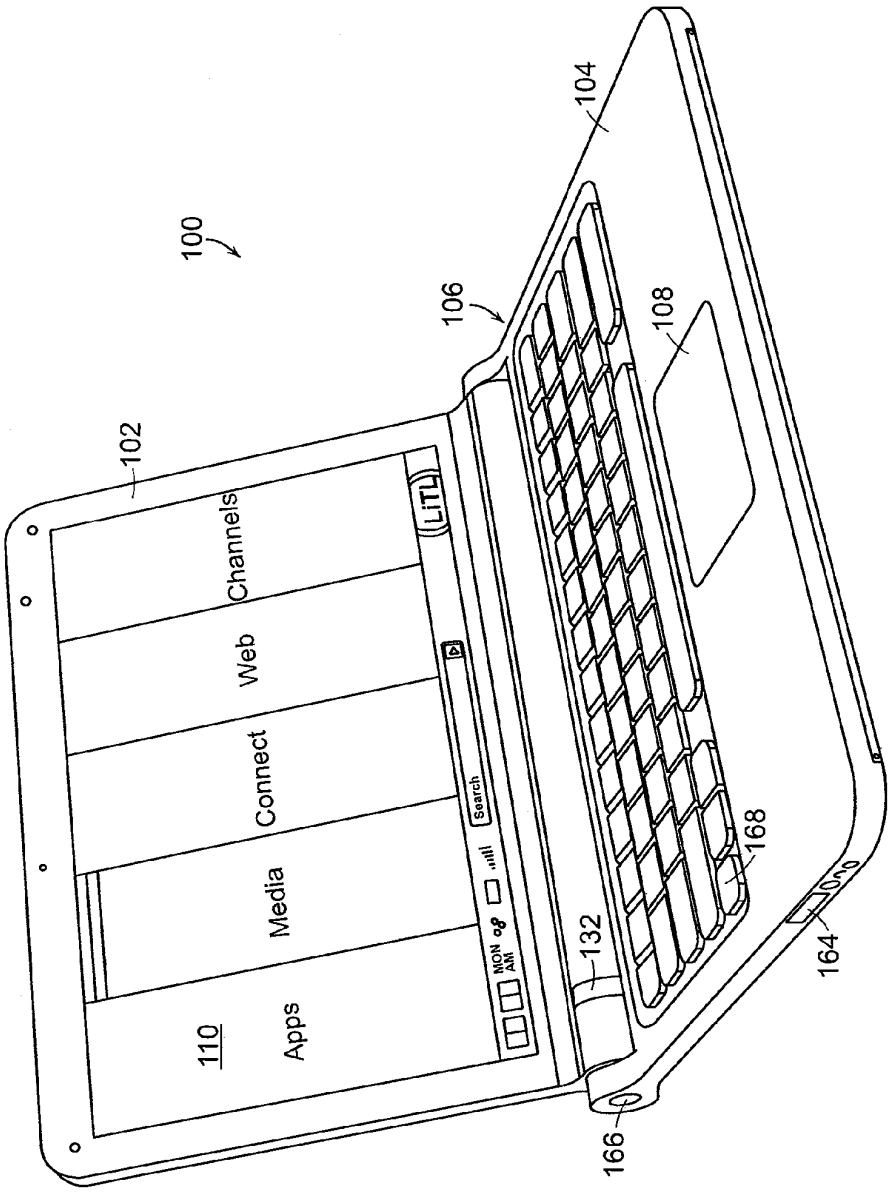
100
102
104
106
108
110
Apps
Media
Connect
Web
Channels
LiTL
Search
MON
AM
132
164
166
168

FIG. 17

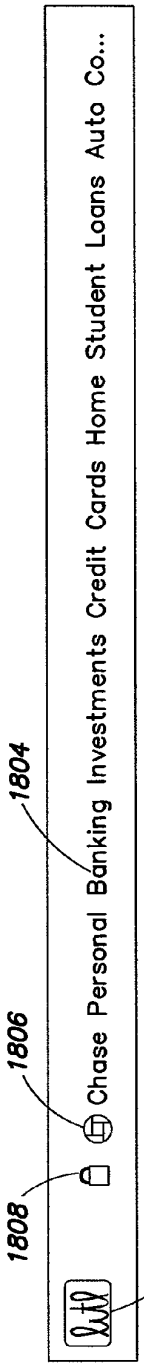

FIG. 18A

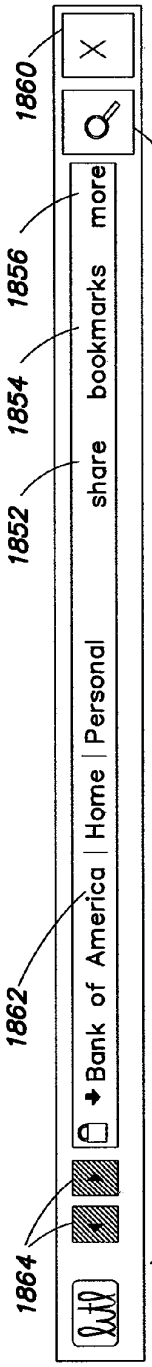

FIG. 18B

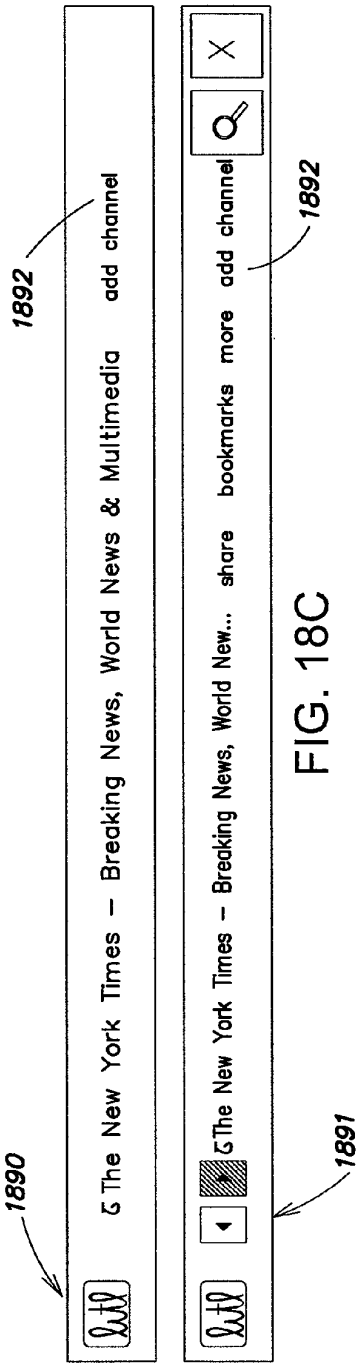

FIG. 18C

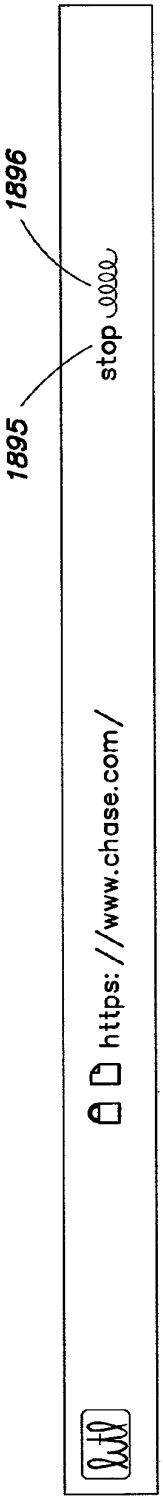

FIG. 18D

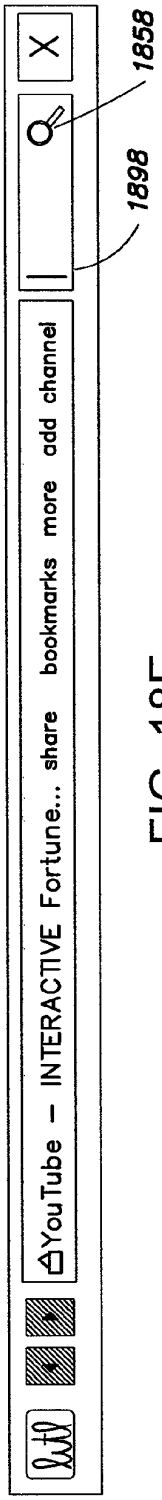

FIG. 18E

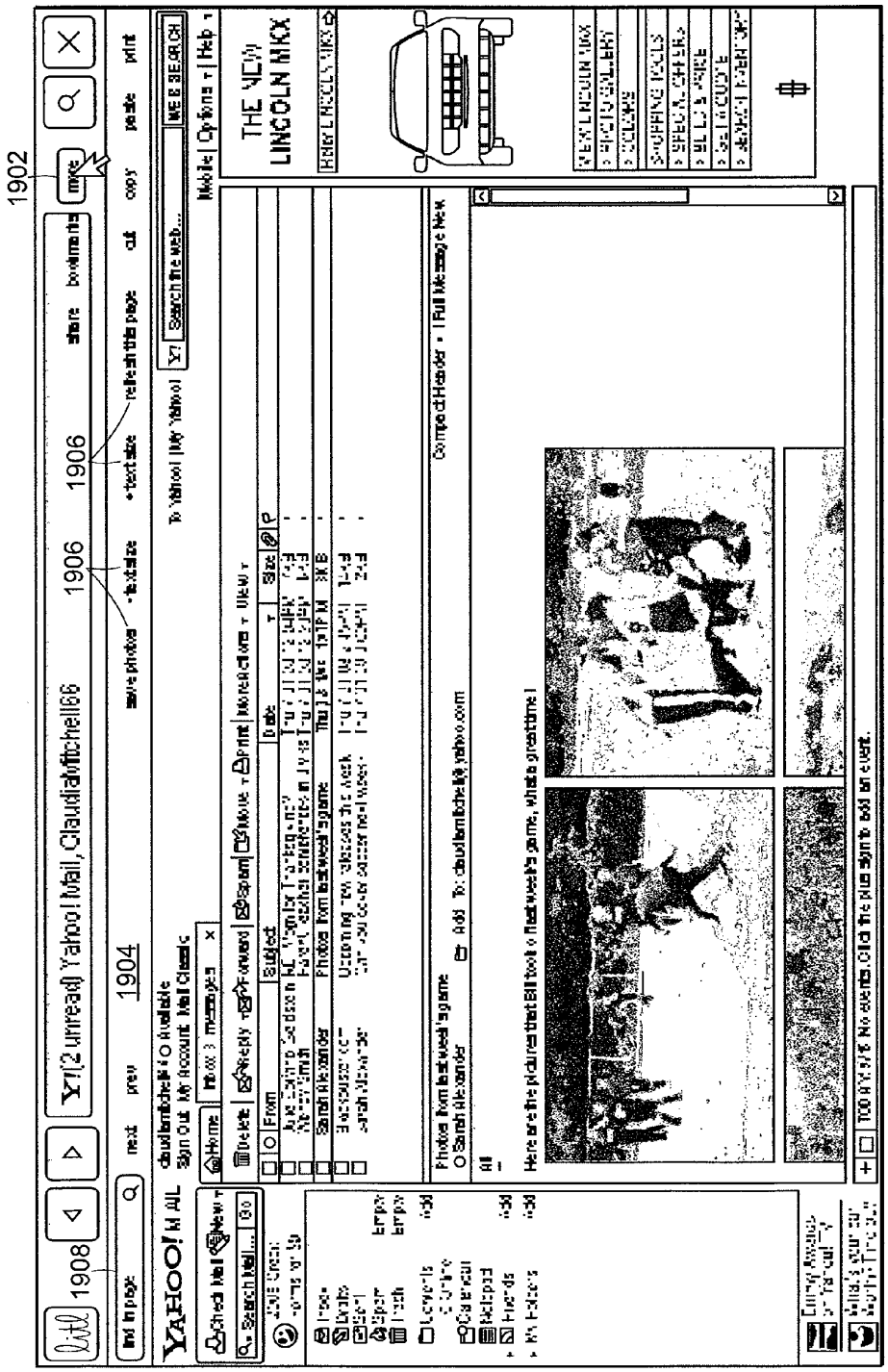

FIG. 19

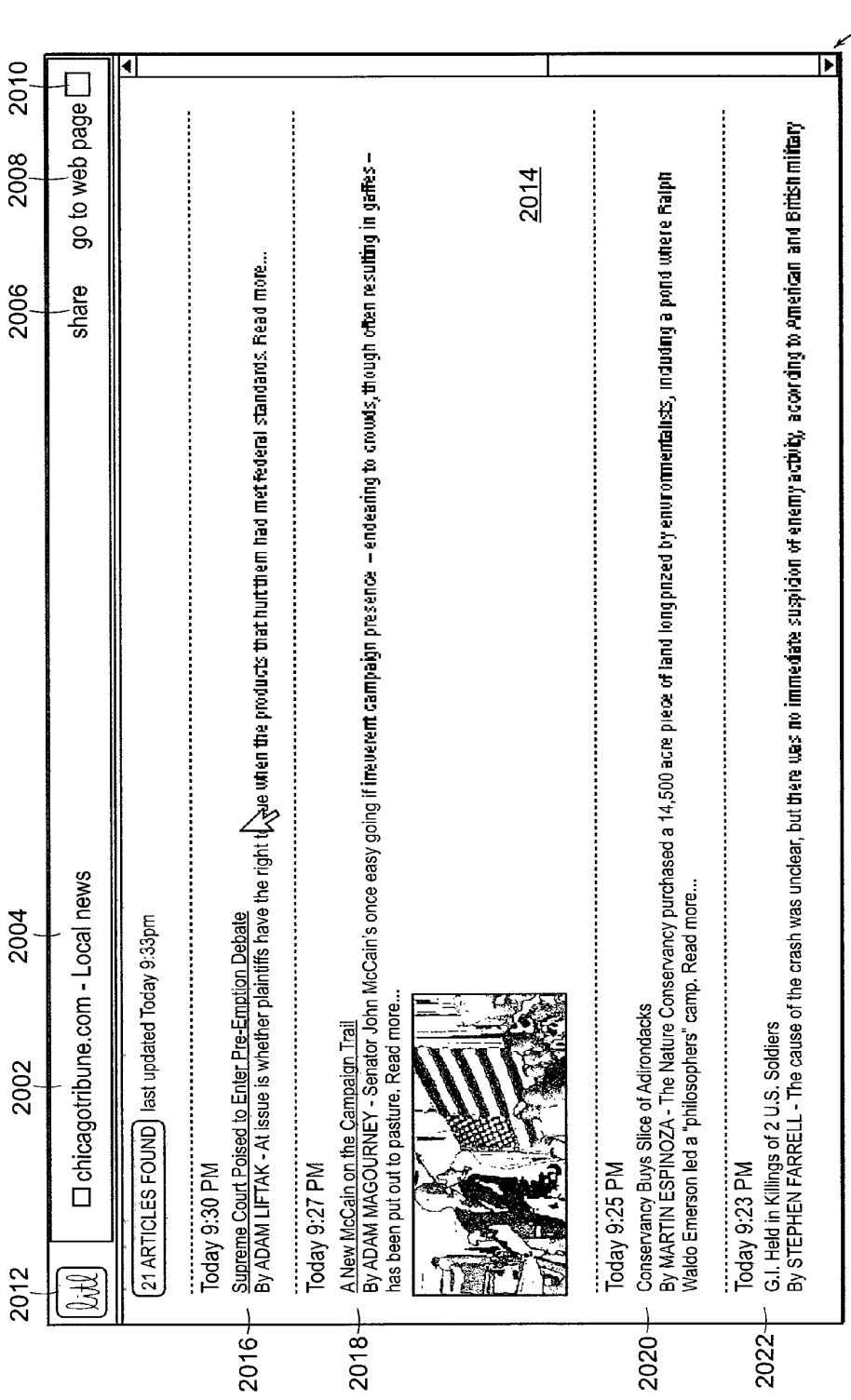
2000
2012
2002
2004
2006
2008
2010
chicagotribune.com - Local news
share
go to web page
21 ARTICLES FOUND
last updated Today 9:33pm
2016
Today 9:30 PM
Supreme Court Poised to Enter Pre-Emption Debate
By ADAM LIFTAK - At issue is whether plaintiffs have the right to sue when the products that hurt them had met federal standards. Read more...
2018
Today 9:27 PM
A New McCain on the Campaign Trail
By ADAM MAGOURNEY - Senator John McCain's once easy going if irreverent campaign presence – endearing to crowds, though often resulting in gaffes – has been put out to pasture. Read more...
2014
2020
Today 9:25 PM
Conservancy Buys Slice of Adirondacks
By MARTIN ESPINOZA - The Nature Conservancy purchased a 14,500 acre piece of land long prized by environmentalists, including a pond where Ralph Waldo Emerson led a "philosophers" camp. Read more...
2022
Today 9:23 PM
G.I. Held in Killings of 2 U.S. Soldiers
By STEPHEN FARRELL - The cause of the crash was unclear, but there was no immediate suspicion of enemy activity, according to American and British military

FIG. 20A

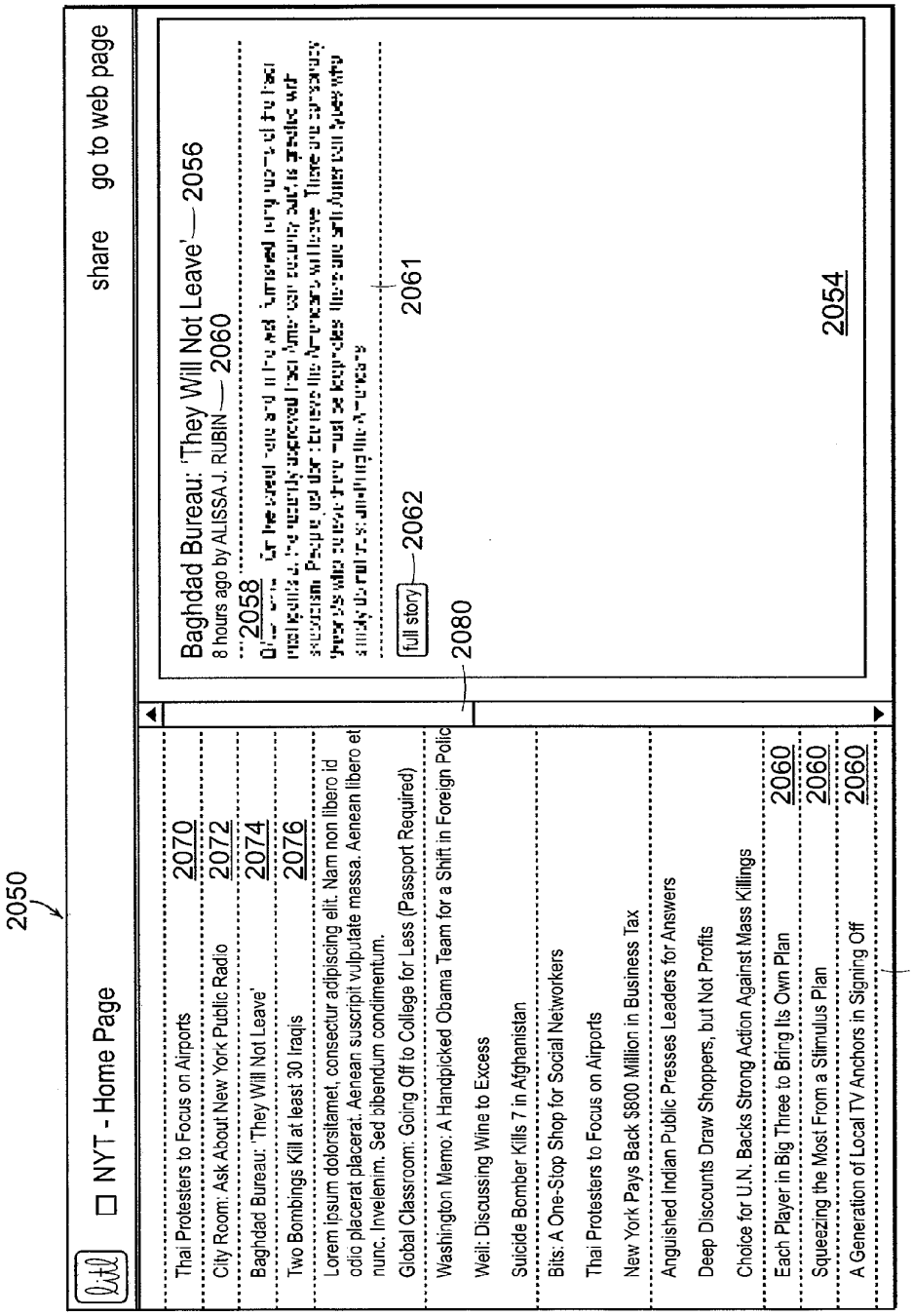
2050
NYT - Home Page
share
go to web page
Thai Protesters to Focus on Airports
2070
City Room: Ask About New York Public Radio
2072
Baghdad Bureau: 'They Will Not Leave'
2074
Two Bombings Kill at least 30 Iraqis
2076
Lorem ipsum dolorsitamet, consectur adipiscing elit. Nam non libero id odio placerat placerat. Aenean suscripit vulputate massa. Aenean libero et nunc. Invelenim. Sed bibendum condimentum.
Global Classroom: Going Off to College for Less (Passport Required)
Washington Memo: A Handpicked Obama Team for a Shift in Foreign Polic
Weil: Discussing Wine to Excess
Suicide Bomber Kills 7 in Afghanistan
Bits: A One-Stop Shop for Social Networkers
Thai Protesters to Focus on Airports
New York Pays Back $800 Million in Business Tax
Anguished Indian Public Presses Leaders for Answers
Deep Discounts Draw Shoppers, but Not Profits
Choice for U.N. Backs Strong Action Against Mass Killings
Each Player in Big Three to Bring Its Own Plan
2060
Squeezing the Most From a Stimulus Plan
2060
A Generation of Local TV Anchors in Signing Off
2060
2052
2080
Baghdad Bureau: 'They Will Not Leave'
2056
8 hours ago by ALISSA J. RUBIN
2060
2058
full story
2062
2061
2054

FIG. 20B

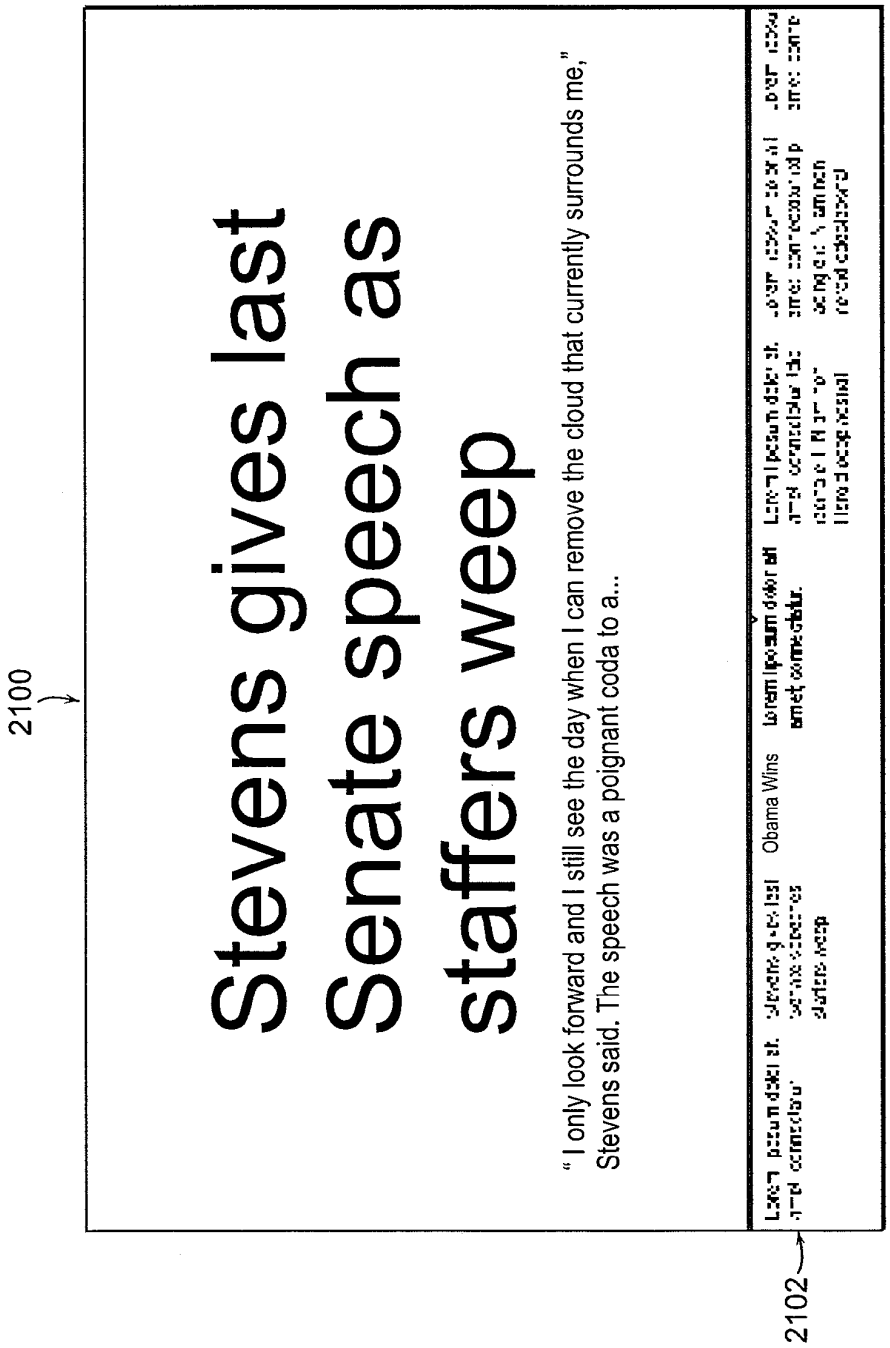
2100
Stevens gives last Senate speech as staffers weep
" I only look forward and I still see the day when I can remove the cloud that currently surrounds me," Stevens said. The speech was a poignant coda to a...
Obama Wins
2102

FIG. 21

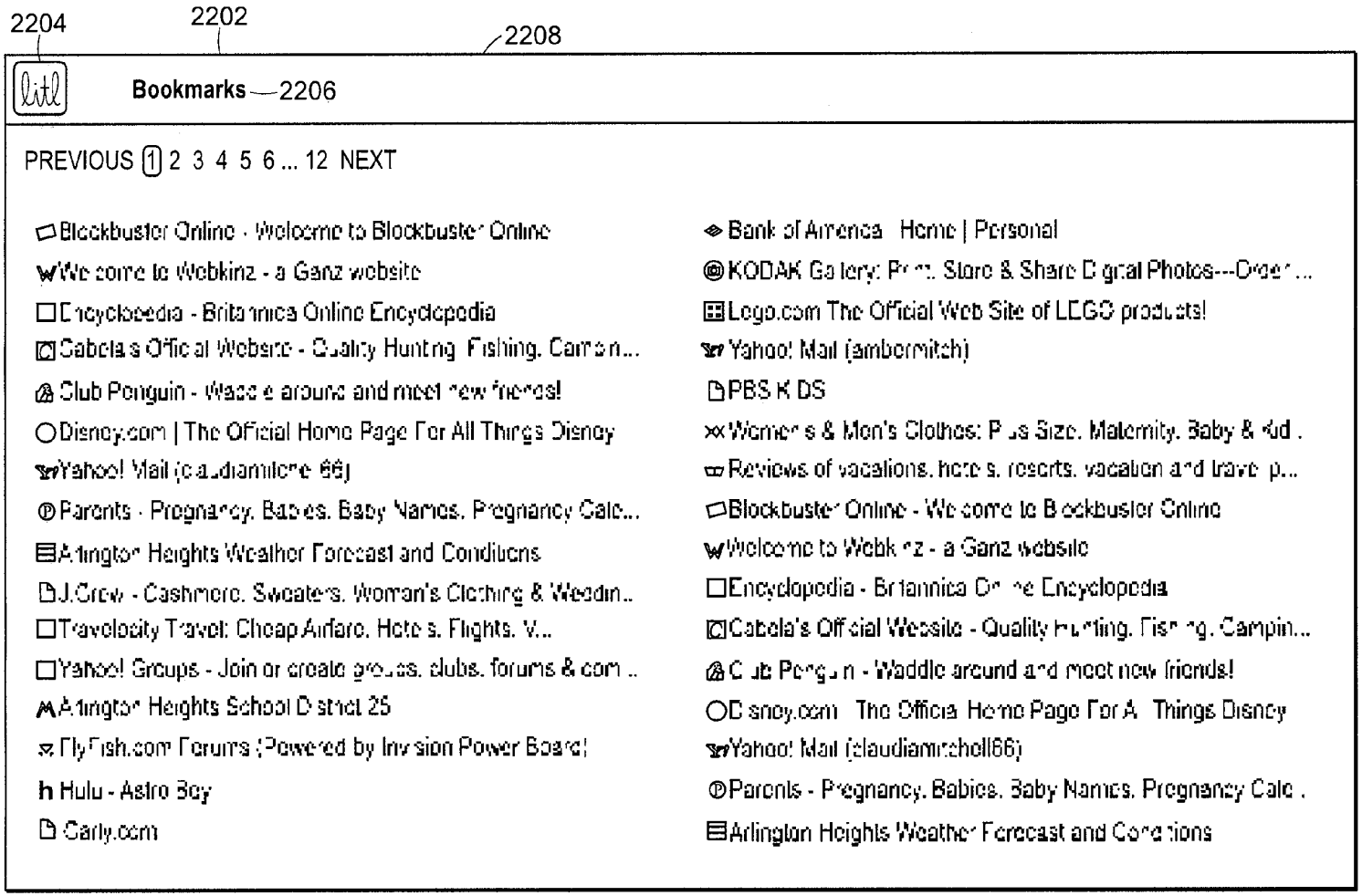
2204
2202
2208
Bookmarks
2206
PREVIOUS 1 2 3 4 5 6 ... 12 NEXT
Blockbuster Online - Welcome to Blockbuster Online
Welcome to Webkinz - a Ganz website
Encyclopedia - Britannica Online Encyclopedia
Cabela's Official Website - Quality Hunting, Fishing, Camp...
Club Penguin - Waddle around and meet new friends!
Disney.com | The Official Home Page For All Things Disney
Yahoo! Mail (claudiamitchell66)
Parents - Pregnancy, Babies, Baby Names, Pregnancy Calc...
Arlington Heights Weather Forecast and Conditions
J.Crew - Cashmere, Sweaters, Woman's Clothing & Wedding...
Travelocity Travel: Cheap Airfare, Hotels, Flights, V...
Yahoo! Groups - Join or create groups, clubs, forums & com...
Arlington Heights School District 25
FlyFish.com Forums (Powered by Invision Power Board)
Hulu - Astro Boy
Carly.com
Bank of America - Home | Personal
KODAK Gallery: Print, Store & Share Digital Photos---Order...
Lego.com The Official Web Site of LEGO products!
Yahoo! Mail (ambermitch)
PBS KIDS
Women's & Men's Clothes: Plus Size, Maternity, Baby & Kid...
Reviews of vacations, hotels, resorts, vacation and travel p...
Blockbuster Online - Welcome to Blockbuster Online
Welcome to Webkinz - a Ganz website
Encyclopedia - Britannica Online Encyclopedia
Cabela's Official Website - Quality Hunting, Fishing, Campin...
Club Penguin - Waddle around and meet new friends!
Disney.com - The Official Home Page For All Things Disney
Yahoo! Mail (claudiamitchell66)
Parents - Pregnancy, Babies, Baby Names, Pregnancy Calc...
Arlington Heights Weather Forecast and Conditions

FIG. 22

2302
2310
2308
2306
2304
Video Messages 1
Mitchell Family
Today at 2:12 PM
Weather: Milan, Italy. Light rain with thunder, 72°F
Sorrento
78°
Venezia
International Herald Tribune
Bush faults China over rights and detentions
THU AUGUST 7, 2008 / 7:30 PM
The White House on Wednesday released critical re

FIG. 23

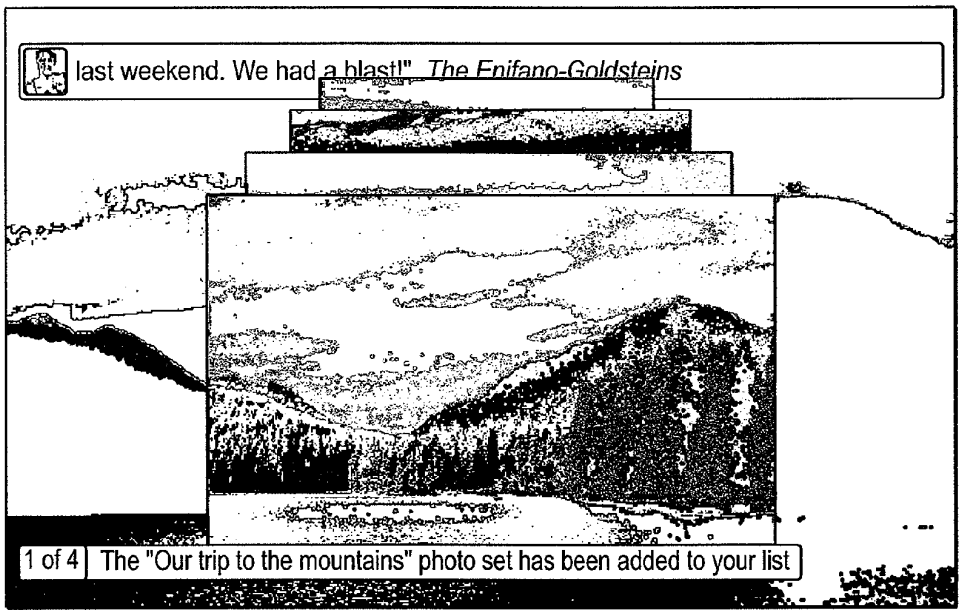
last weekend. We had a blast!" The Enifano-Goldsteins
1 of 4
The "Our trip to the mountains" photo set has been added to your list

FIG. 24

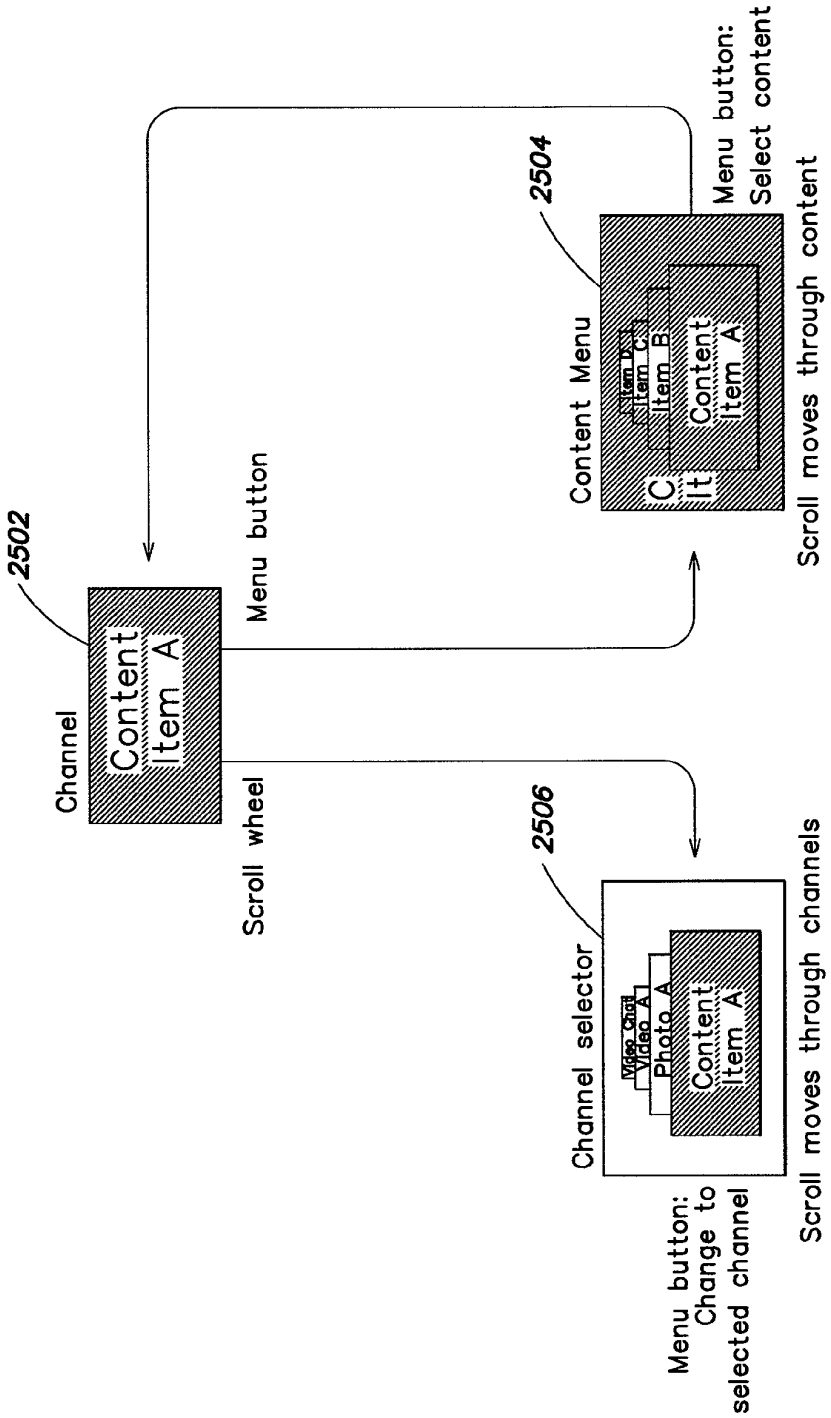
2502
Channel
Content
Item A
Menu button
Scroll wheel
2504
Content Menu
Item D
Item C
Item B
Content
Item A
Menu button:
Select content
Scroll moves through content
2506
Channel selector
Video Chat
Video A
Photo A
Content
Item A
Menu button:
Change to
selected channel
Scroll moves through channels

FIG. 25A

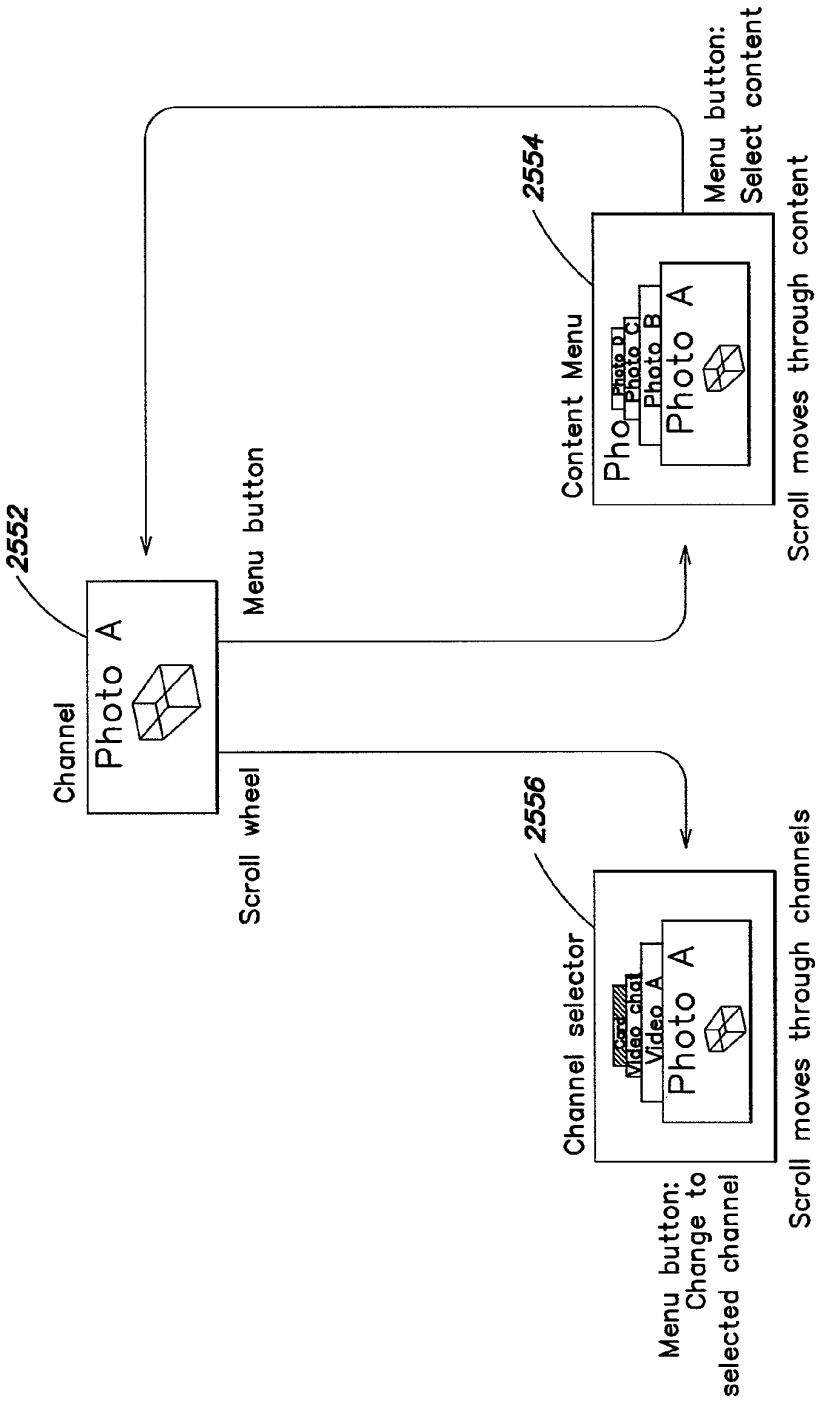
2552
Channel
Photo A
Menu button
Scroll wheel
2554
Content Menu
Photo D
Photo C
Photo B
Photo A
Menu button:
Select content
Scroll moves through content
2556
Channel selector
Video chat
Video A
Photo A
Menu button:
Change to
selected channel
Scroll moves through channels

FIG. 25B

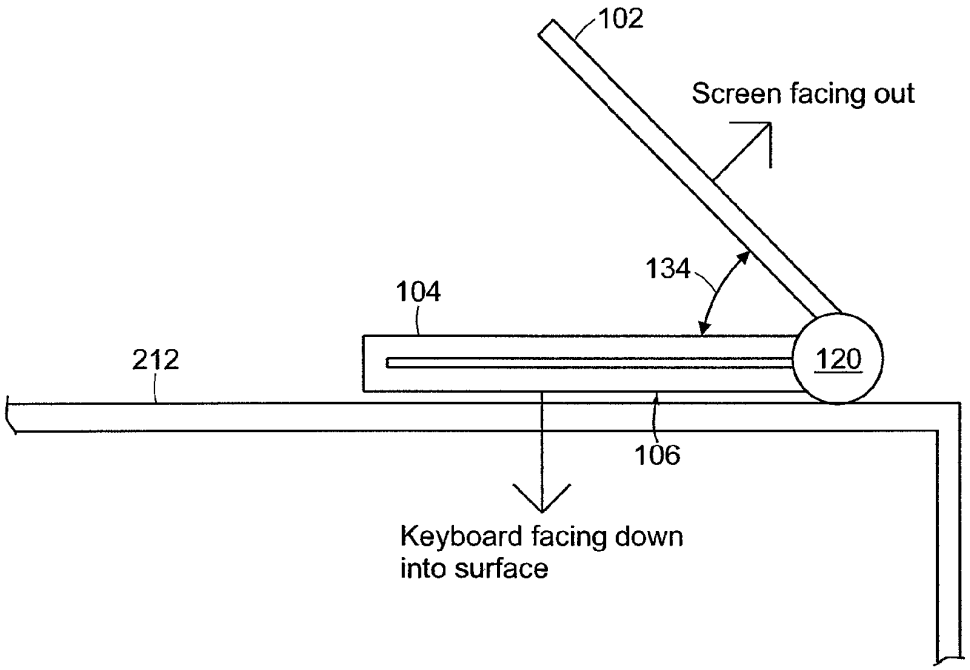
102
Screen facing out
134
104
212
120
106
Keyboard facing down
into surface

FIG. 26

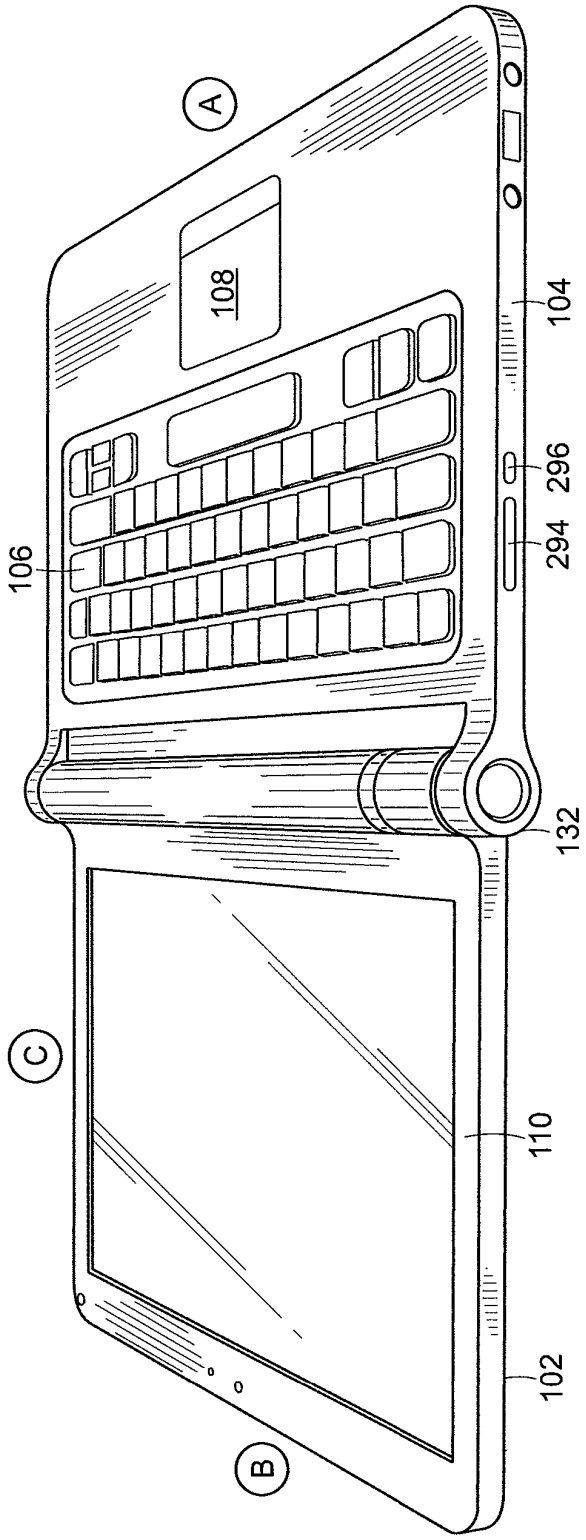

FIG. 27

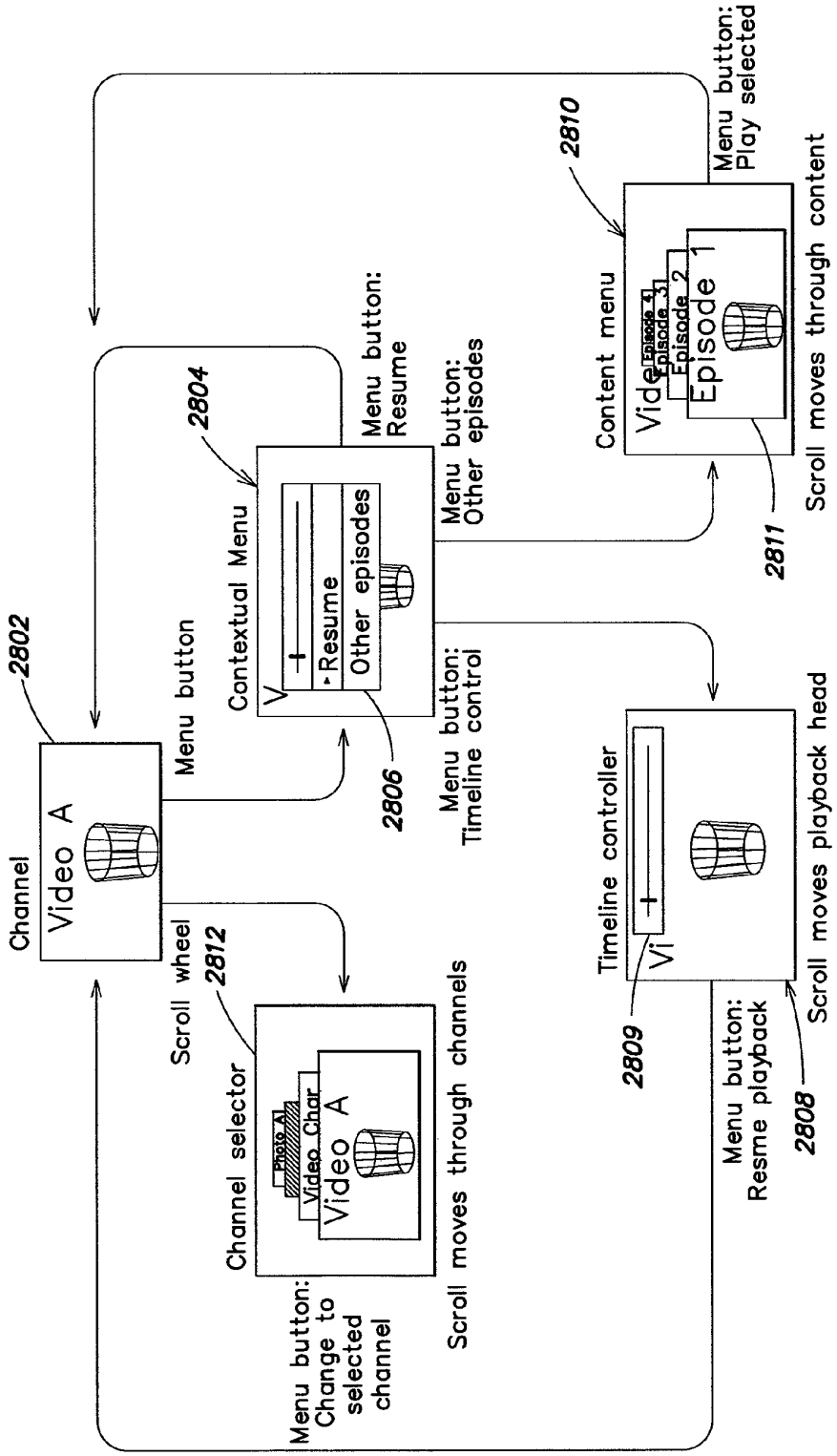
2802
Channel
Video A
Menu button
2804
Contextual Menu
Resume
Other episodes
2806
Menu button: Resume
Menu button: Other episodes
Menu button: Timeline control
2810
Content menu
Episode 1
Episode 2
Episode 3
Episode 4
2811
Menu button: Play selected
Scroll moves through content
Scroll wheel
2812
Channel selector
Video A
Video Char
Photo A
Menu button: Change to selected channel
Scroll moves through channels
Timeline controller
2809
Menu button: Resme playback
2808
Scroll moves playback head

FIG. 28

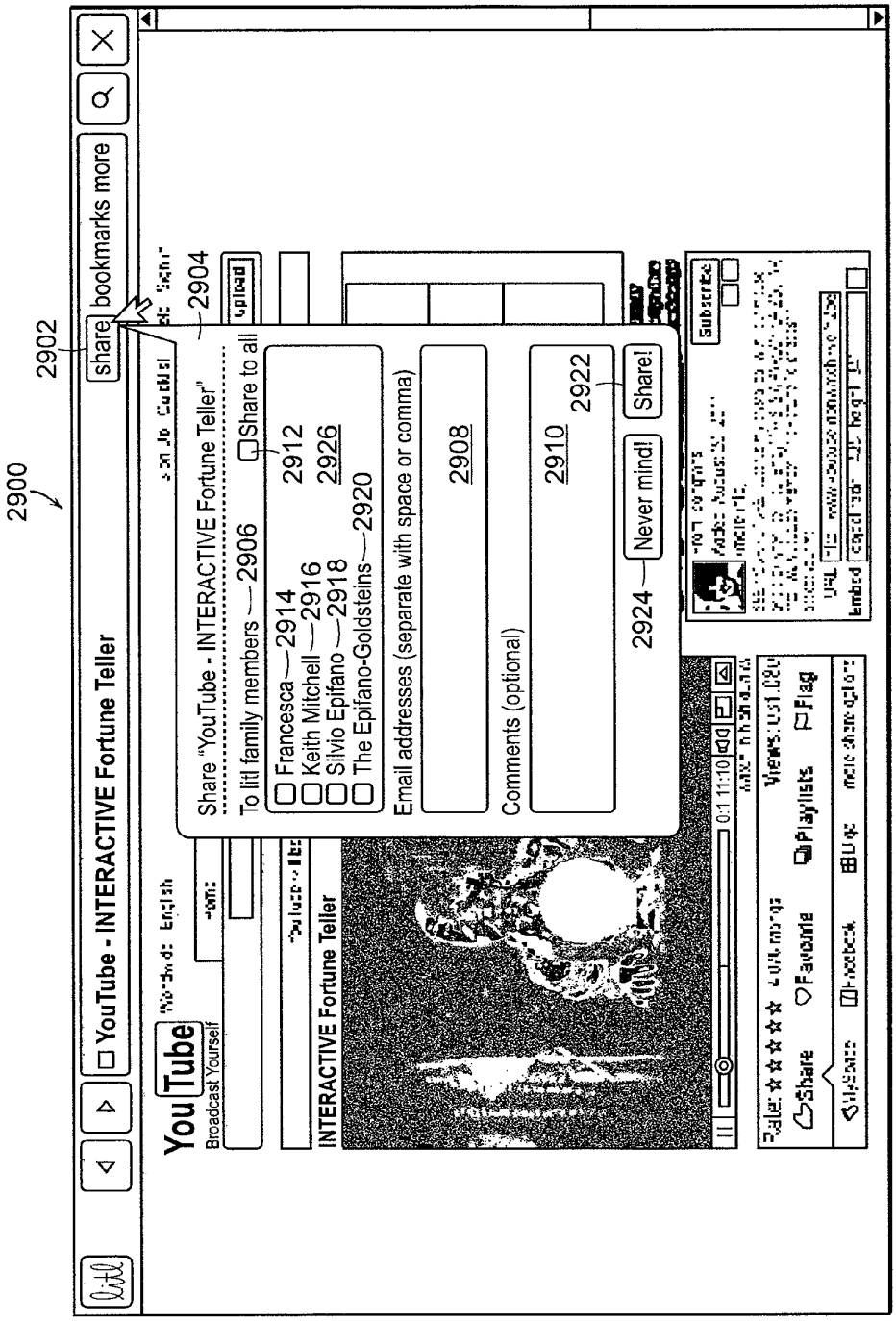
2900
2902
2904
YouTube - INTERACTIVE Fortune Teller
share
bookmarks
more
Share "YouTube - INTERACTIVE Fortune Teller"
To litl family members
2906
Share to all
Francesca
2914
2912
Keith Mitchell
2916
Silvio Epifano
2918
2926
The Epifano-Goldsteins
2920
Email addresses (separate with space or comma)
2908
Comments (optional)
2910
2922
2924
Never mind!
Share!
INTERACTIVE Fortune Teller
Share
Favorite
Playlists
Flag

FIG. 29A

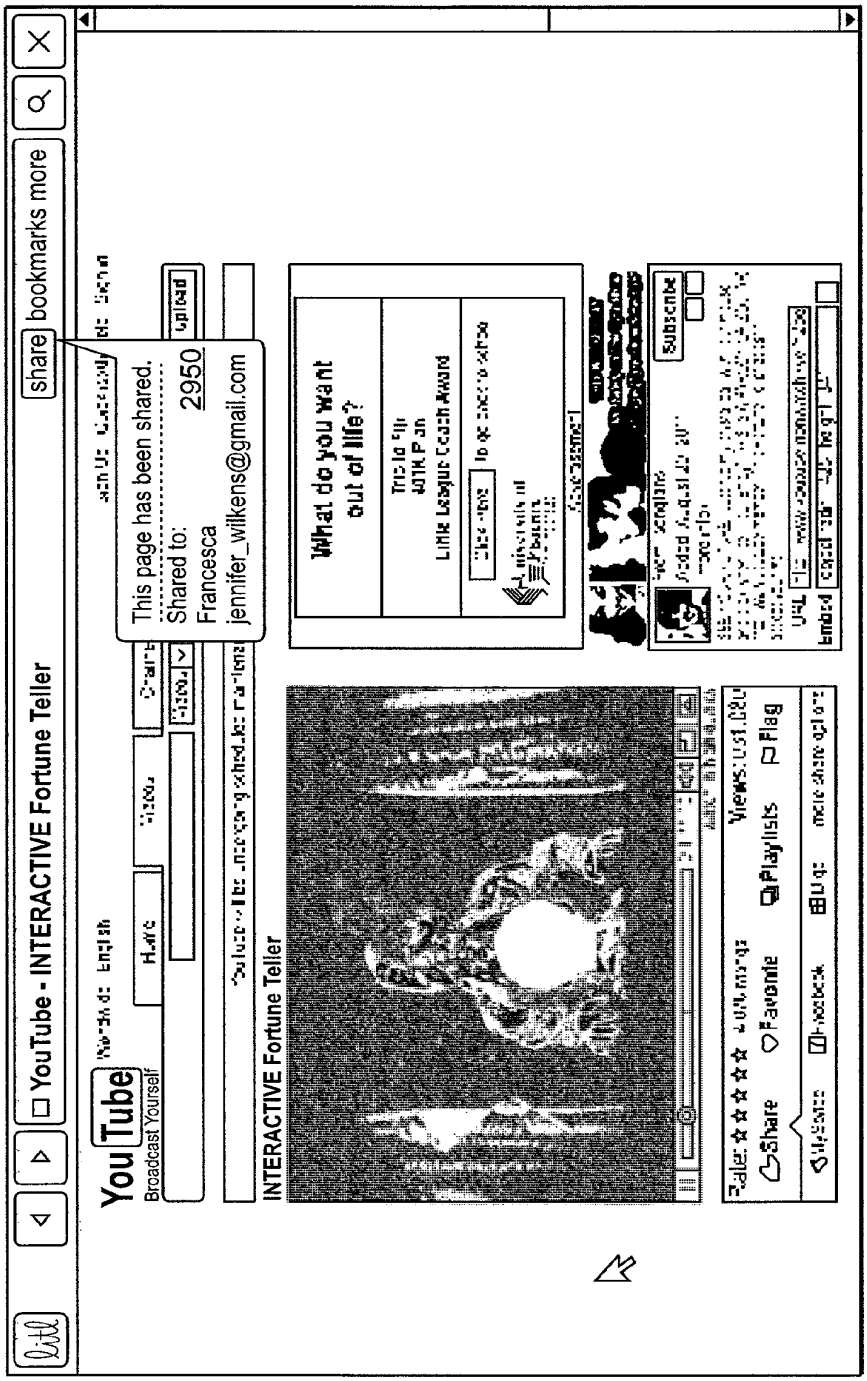
YouTube - INTERACTIVE Fortune Teller
share
bookmarks
more
YouTube
Broadcast Yourself
This page has been shared.
Shared to:
2950
Francesca
jennifer_wilkens@gmail.com
INTERACTIVE Fortune Teller
What do you want out of life?
Share
Favorite
Playlists
Flag
Subscribe

FIG. 29B

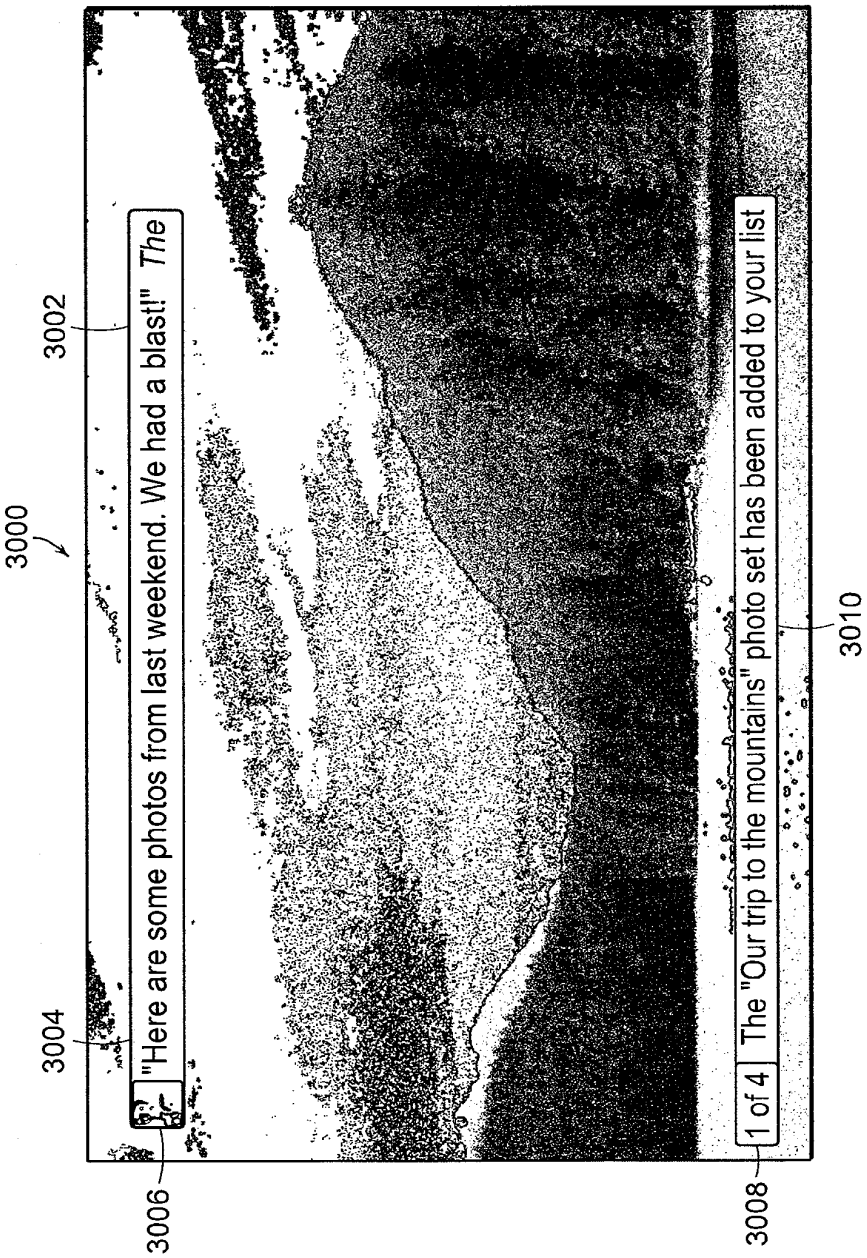
3000
3002
3004
3006
"Here are some photos from last weekend. We had a blast!" The
3008
1 of 4
The "Our trip to the mountains" photo set has been added to your list
3010

FIG. 30

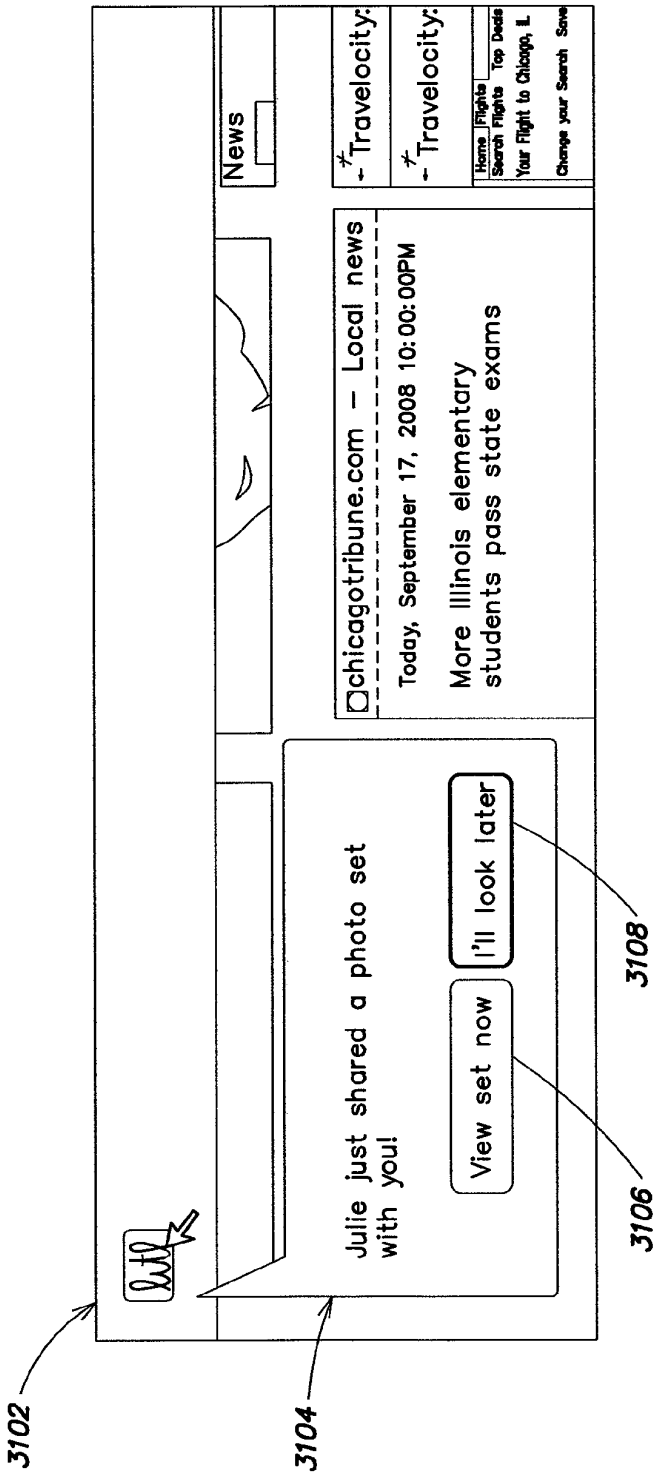
News
Travelocity:
Travelocity:
Home
Flights
Top Deals
Search Flights
Your Flight to Chicago, IL
Change your Search
Save
chicagotribune.com – Local news
Today, September 17, 2008 10:00:00PM
More Illinois elementary students pass state exams
Julie just shared a photo set with you!
View set now
I'll look later
3102
3104
3106
3108

FIG. 31

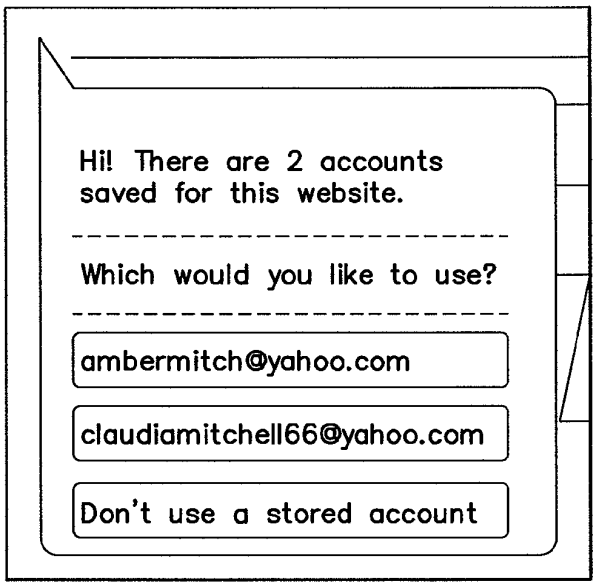
Hi! There are 2 accounts saved for this website.
Which would you like to use?
ambermitch@yahoo.com
claudiamitchell66@yahoo.com
Don't use a stored account

FIG. 32

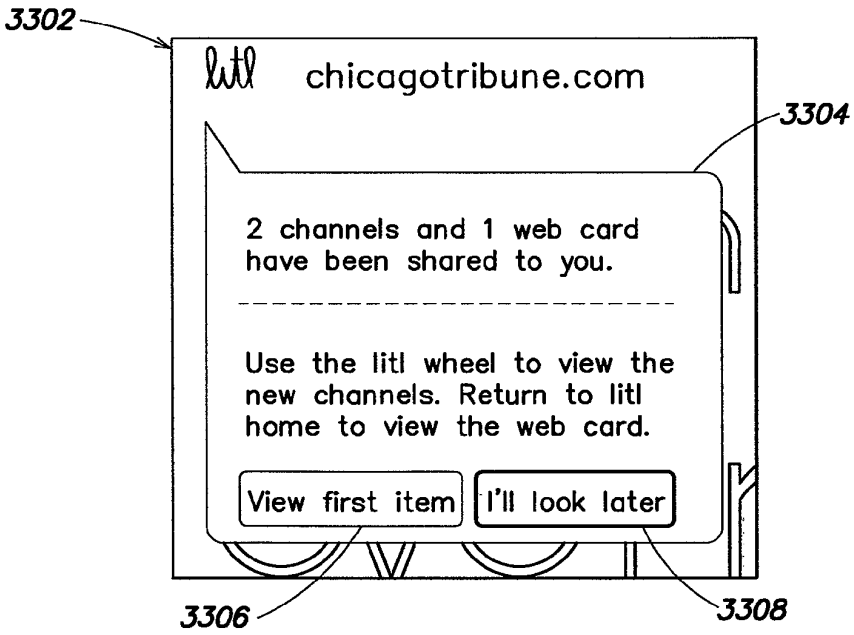
3302
litl
chicagotribune.com
3304
2 channels and 1 web card have been shared to you.
Use the litl wheel to view the new channels. Return to litl home to view the web card.
View first item
I'll look later
3306
3308

FIG. 33

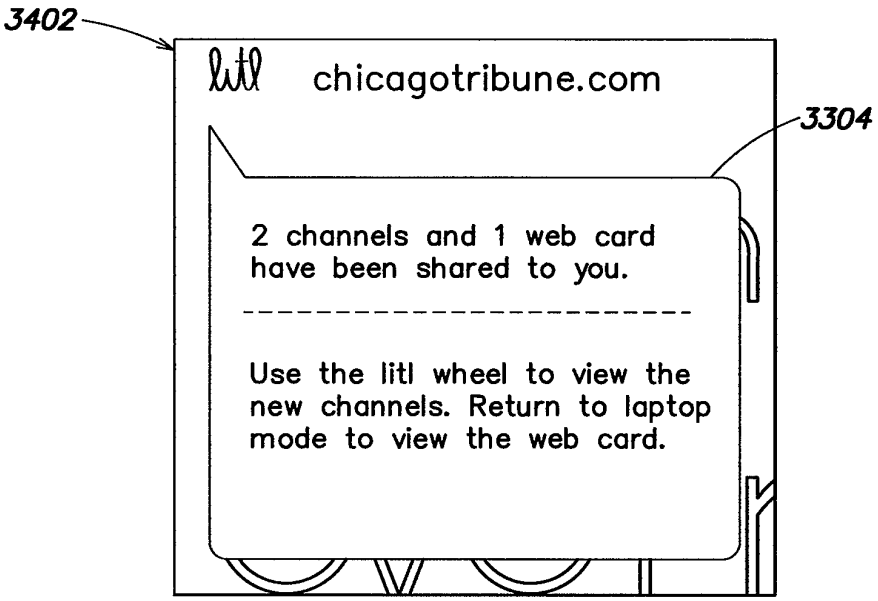
3402
litl
chicagotribune.com
3304
2 channels and 1 web card have been shared to you.
Use the litl wheel to view the new channels. Return to laptop mode to view the web card.

FIG. 34

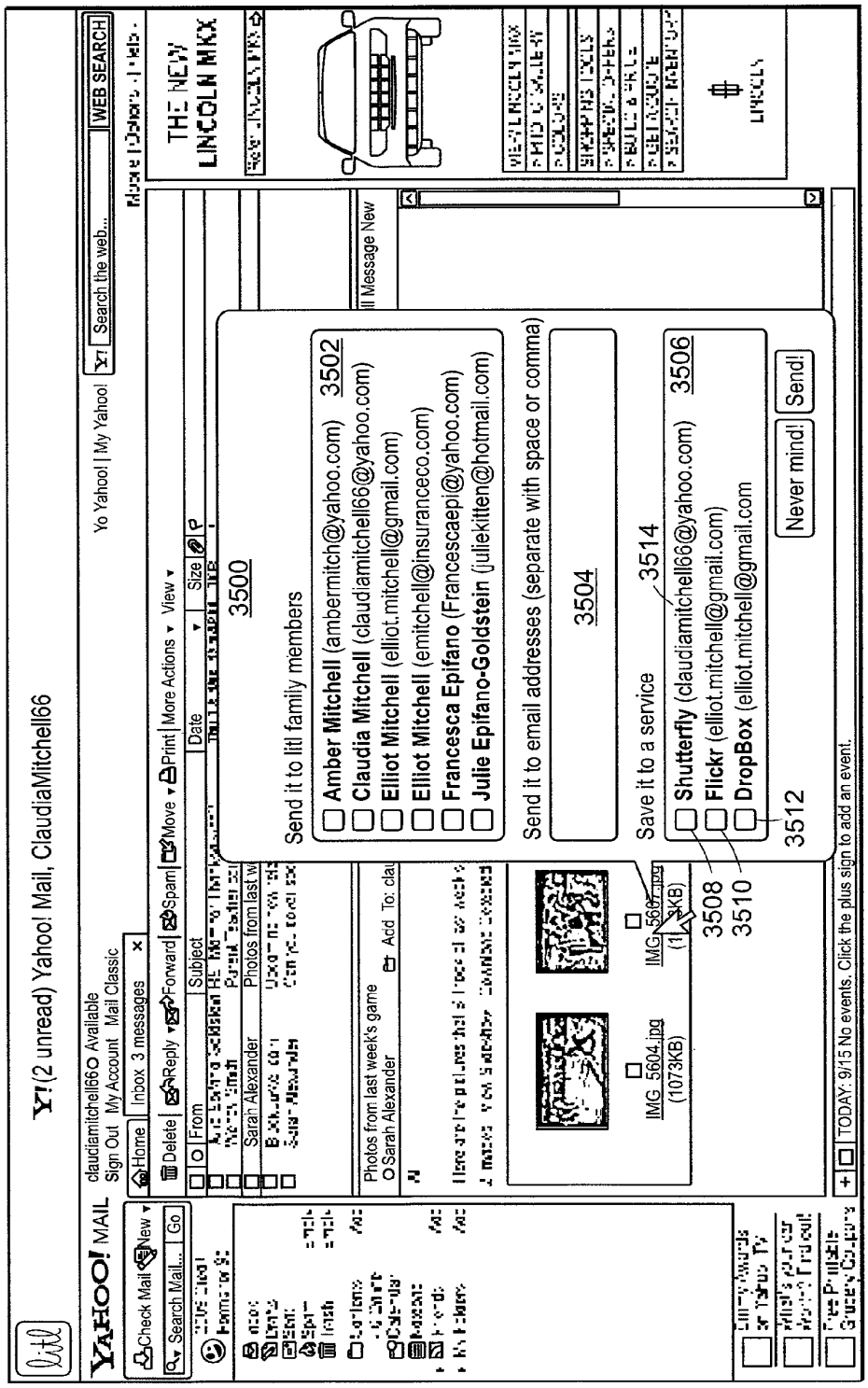
Y! (2 unread) Yahoo! Mail, ClaudiaMitchell66
YAHOO! MAIL
claudiamitchell66 Available
Sign Out My Account Mail Classic
Yo Yahoo! | My Yahoo!
Search the web...
WEB SEARCH
Check Mail
New
Search Mail...
Go
Home
Inbox 3 messages
Delete
Reply
Forward
Spam
Move
Print
More Actions
View
From
Subject
Date
Size
Sarah Alexander
Photos from last week's game
Photos from last week's game
Sarah Alexander
Add To: clau
IMG_5604.jpg
(1073KB)
IMG_5605.jpg
3500
Send it to lil! family members
Amber Mitchell (ambermitch@yahoo.com)
Claudia Mitchell (claudiamitchell66@yahoo.com)
Elliot Mitchell (elliot.mitchell@gmail.com)
Elliot Mitchell (emitchell@insuranceco.com)
Francesca Epifano (Francescaepi@yahoo.com)
Julie Epifano-Goldstein (juliekitten@hotmail.com)
3502
Send it to email addresses (separate with space or comma)
3504
Save it to a service
3514
Shutterfly (claudiamitchell66@yahoo.com)
Flickr (elliot.mitchell@gmail.com)
DropBox (elliot.mitchell@gmail.com
3506
3508
3510
3512
Never mind!
Send!
TODAY: 9/15 No events. Click the plus sign to add an event.
THE NEW LINCOLN MKX
LINCOLN

FIG. 35

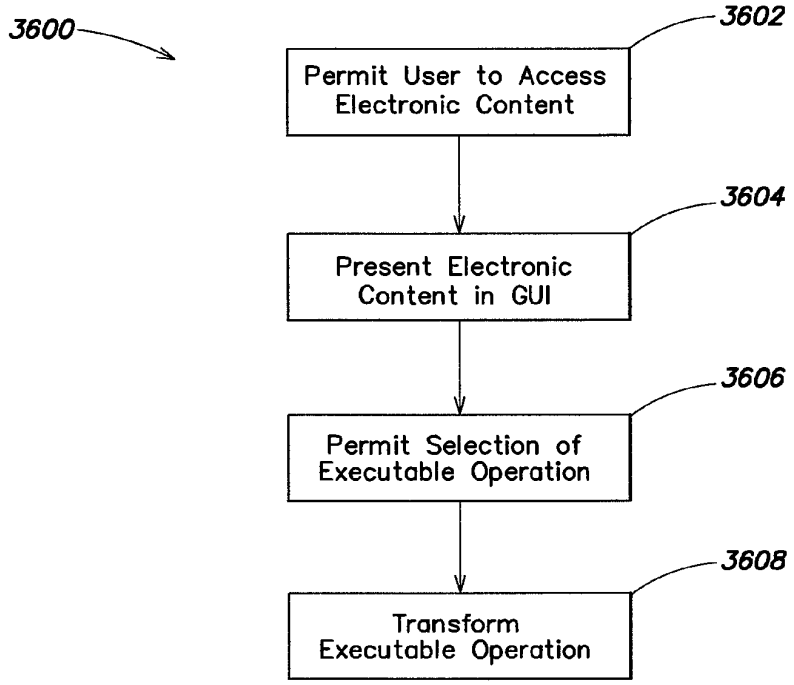
3600
3602
Permit User to Access Electronic Content
3604
Present Electronic Content in GUI
3606
Permit Selection of Executable Operation
3608
Transform Executable Operation

FIG. 36

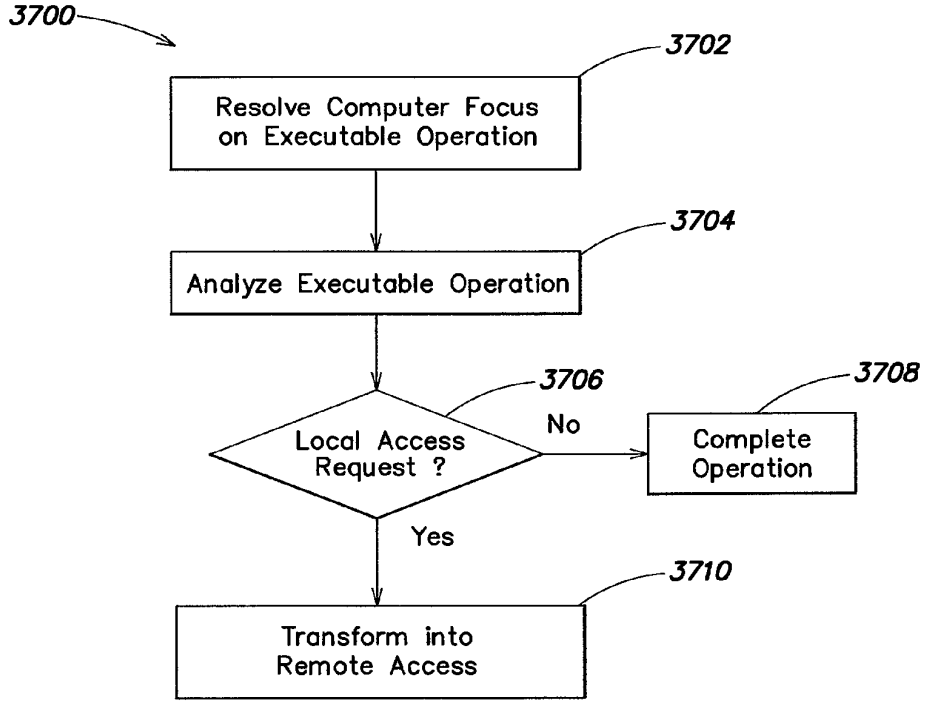
3700
3702
Resolve Computer Focus on Executable Operation
3704
Analyze Executable Operation
3706
Local Access Request ?
No
3708
Complete Operation
Yes
3710
Transform into Remote Access

FIG. 37

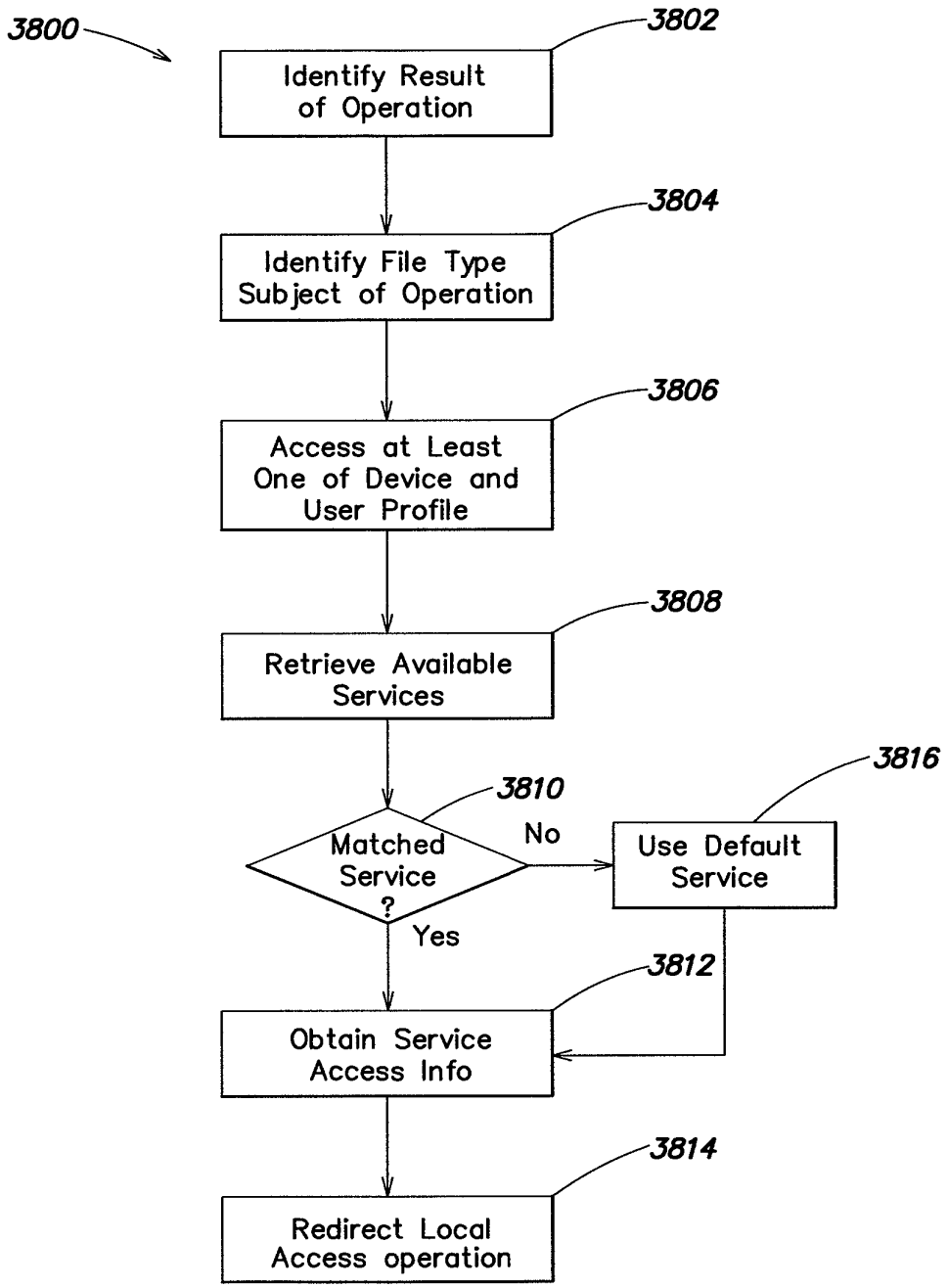
3800
3802
Identify Result of Operation
3804
Identify File Type Subject of Operation
3806
Access at Least One of Device and User Profile
3808
Retrieve Available Services
3810
Matched Service ?
No
Yes
3816
Use Default Service
3812
Obtain Service Access Info
3814
Redirect Local Access operation

FIG. 38

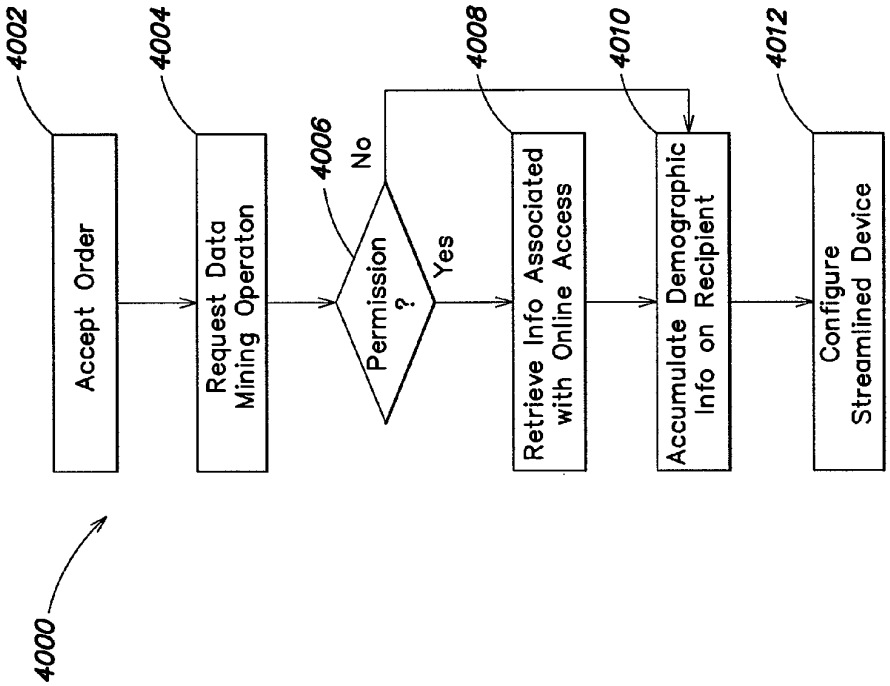
4000
4002
Accept Order
4004
Request Data Mining Operaton
4006
Permission ?
No
Yes
4008
Retrieve Info Associated with Online Access
4010
Accumulate Demographic Info on Recipient
4012
Configure Streamlined Device

FIG. 40

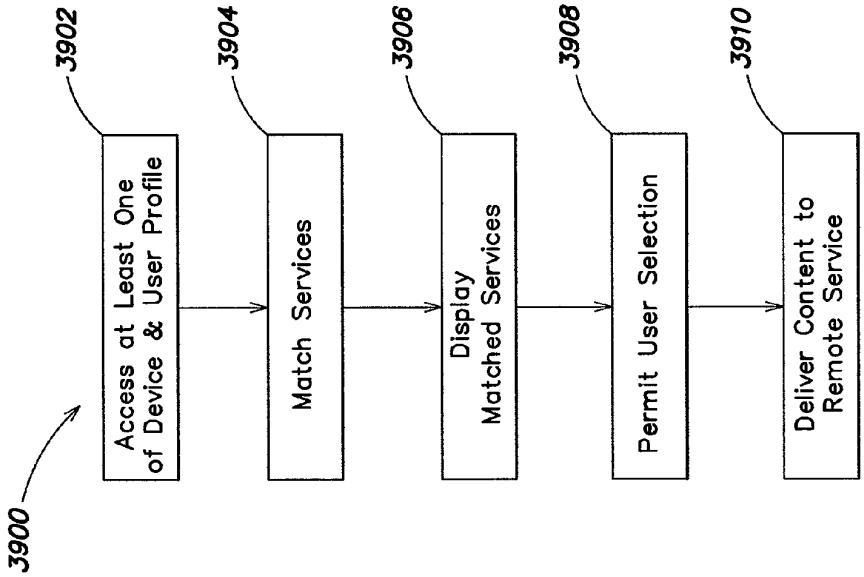
3900
3902
Access at Least One of Device & User Profile
3904
Match Services
3906
Display Matched Services
3908
Permit User Selection
3910
Deliver Content to Remote Service

FIG. 39

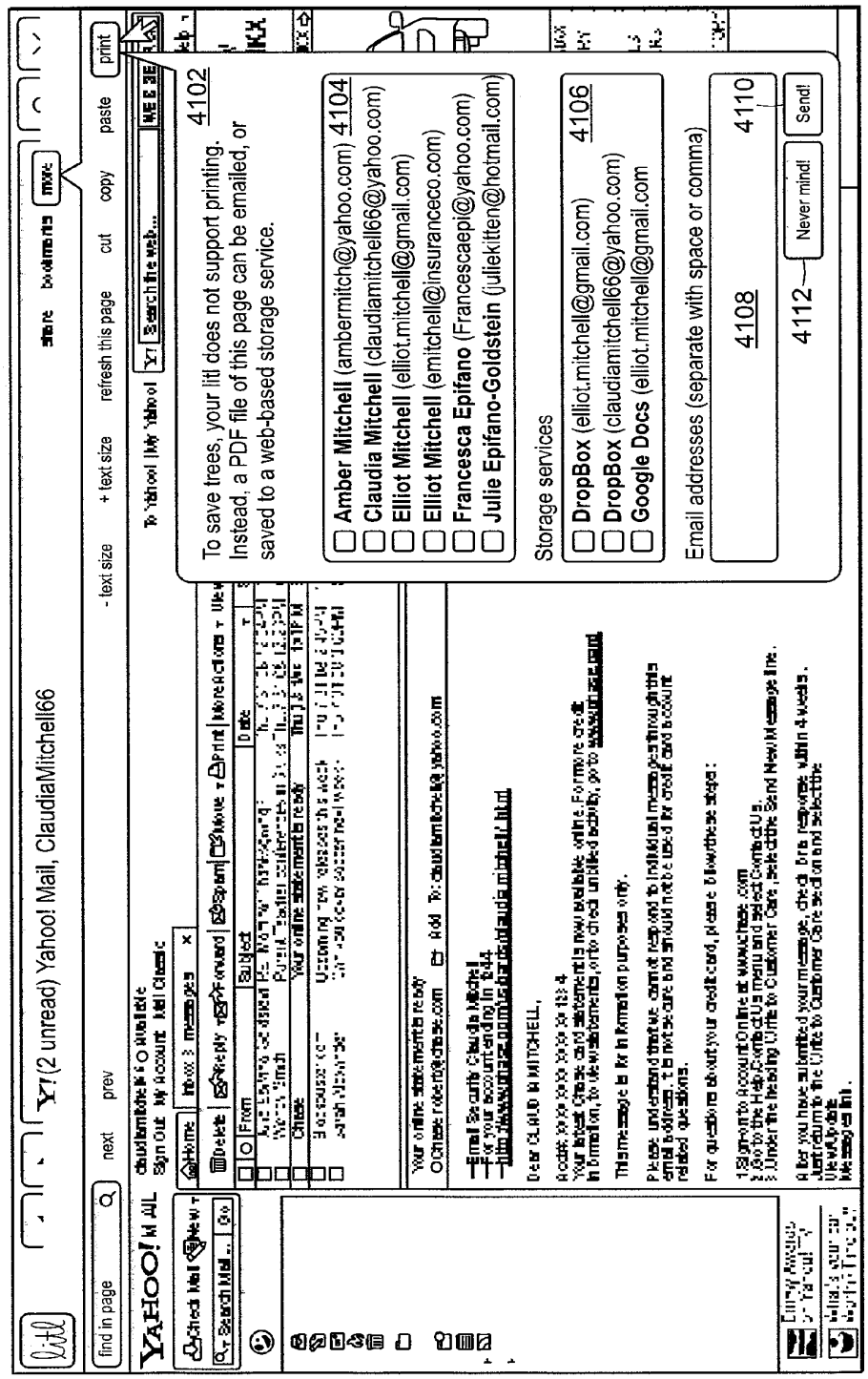
To save trees, your litl does not support printing.
Instead, a PDF file of this page can be emailed, or saved to a web-based storage service.
4102
Amber Mitchell (ambermitch@yahoo.com)
Claudia Mitchell (claudiamitchell66@yahoo.com)
Elliot Mitchell (elliot.mitchell@gmail.com)
Elliot Mitchell (emitchell@insuranceco.com)
Francesca Epifano (Francescaepi@yahoo.com)
Julie Epifano-Goldstein (juliekitten@hotmail.com)
4104
Storage services
DropBox (elliot.mitchell@gmail.com)
DropBox (claudiamitchell66@yahoo.com)
Google Docs (elliot.mitchell@gmail.com
4106
Email addresses (separate with space or comma)
4108
4110
4112
Never mind!
Send!

FIG. 41A

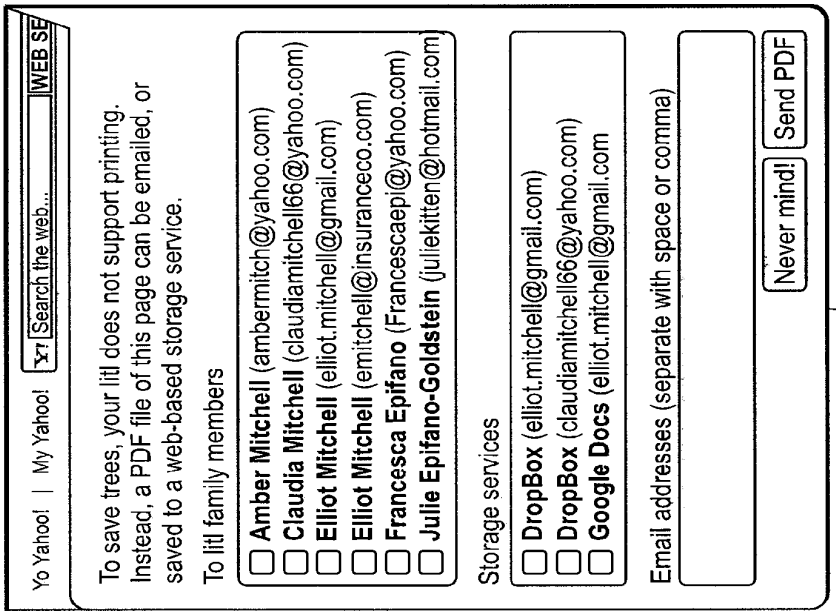
Yo Yahoo! | My Yahoo!
Search the web...
WEB SE
To save trees, your litl does not support printing. Instead, a PDF file of this page can be emailed, or saved to a web-based storage service.
To litl family members
Amber Mitchell (ambermitch@yahoo.com)
Claudia Mitchell (claudiamitchell66@yahoo.com)
Elliot Mitchell (elliot.mitchell@gmail.com)
Elliot Mitchell (emitchell@insuranceco.com)
Francesca Epifano (Francescaepi@yahoo.com)
Julie Epifano-Goldstein (juliekitten@hotmail.com)
Storage services
DropBox (elliot.mitchell@gmail.com)
DropBox (claudiamitchell66@yahoo.com)
Google Docs (elliot.mitchell@gmail.com
Email addresses (separate with space or comma)
Never mind!
Send PDF
4150

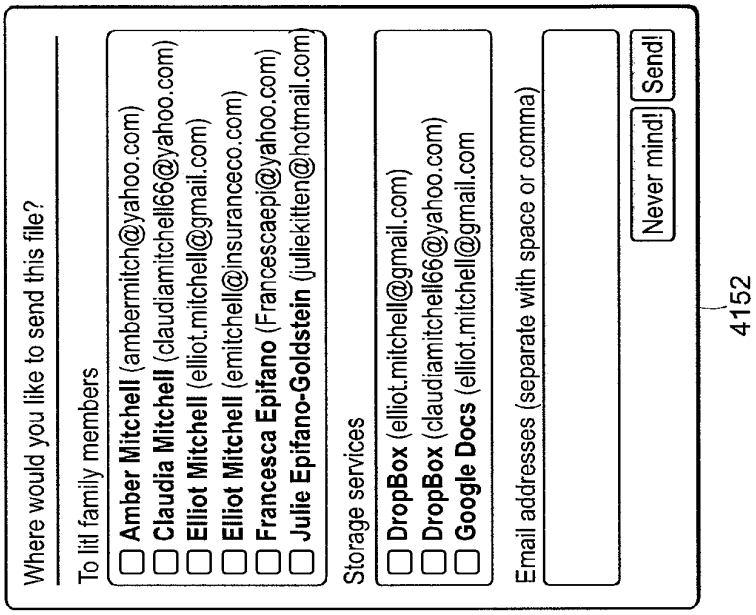
Where would you like to send this file?
To litl family members
Amber Mitchell (ambermitch@yahoo.com)
Claudia Mitchell (claudiamitchell66@yahoo.com)
Elliot Mitchell (elliot.mitchell@gmail.com)
Elliot Mitchell (emitchell@insuranceco.com)
Francesca Epifano (Francescaepi@yahoo.com)
Julie Epifano-Goldstein (juliekitten@hotmail.com)
Storage services
DropBox (elliot.mitchell@gmail.com)
DropBox (claudiamitchell66@yahoo.com)
Google Docs (elliot.mitchell@gmail.com
Email addresses (separate with space or comma)
Never mind!
Send!
4152

FIG. 41B

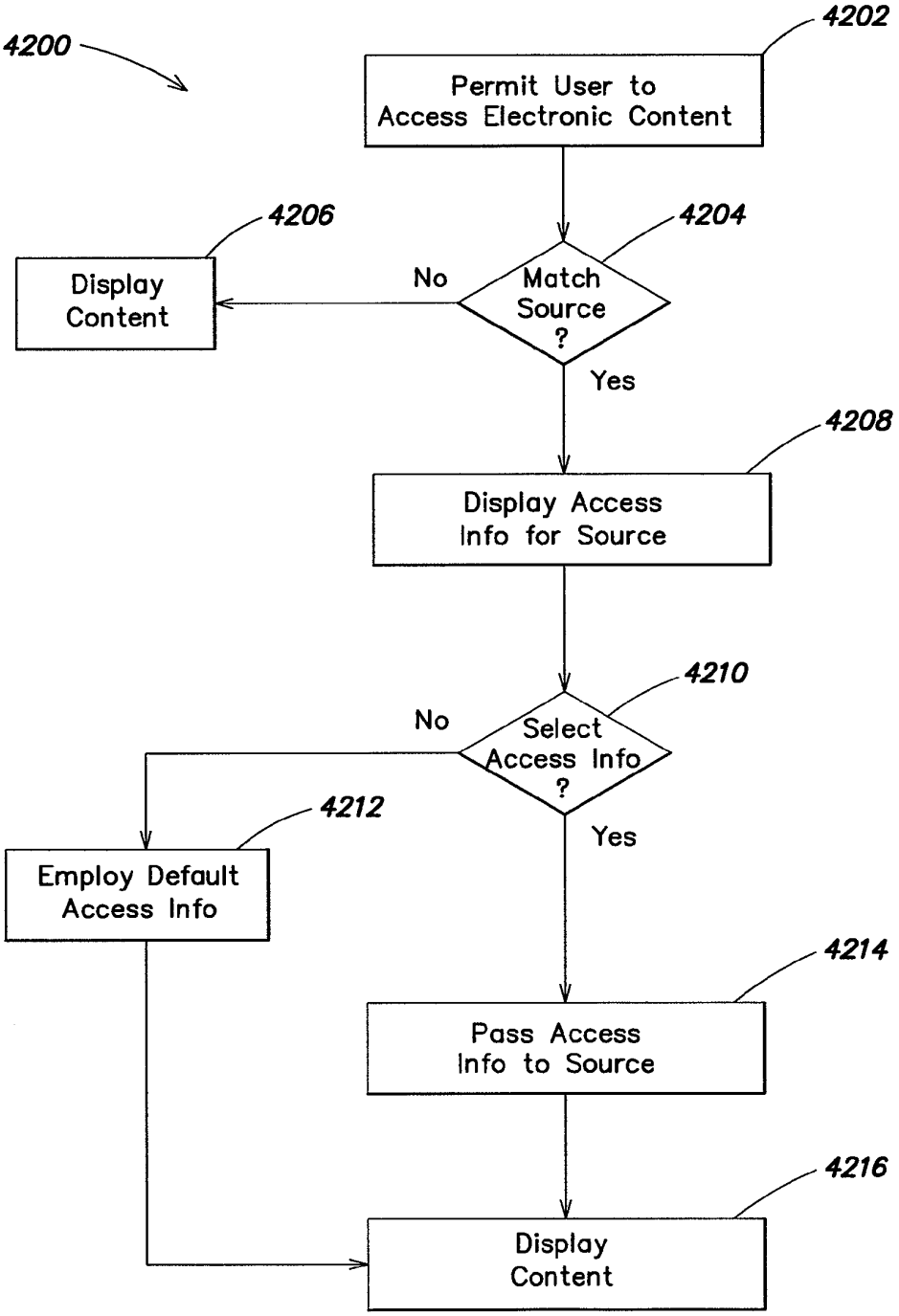
4200
4202
Permit User to Access Electronic Content
4204
Match Source ?
No
4206
Display Content
Yes
4208
Display Access Info for Source
4210
Select Access Info ?
No
4212
Employ Default Access Info
Yes
4214
Pass Access Info to Source
4216
Display Content

FIG. 42

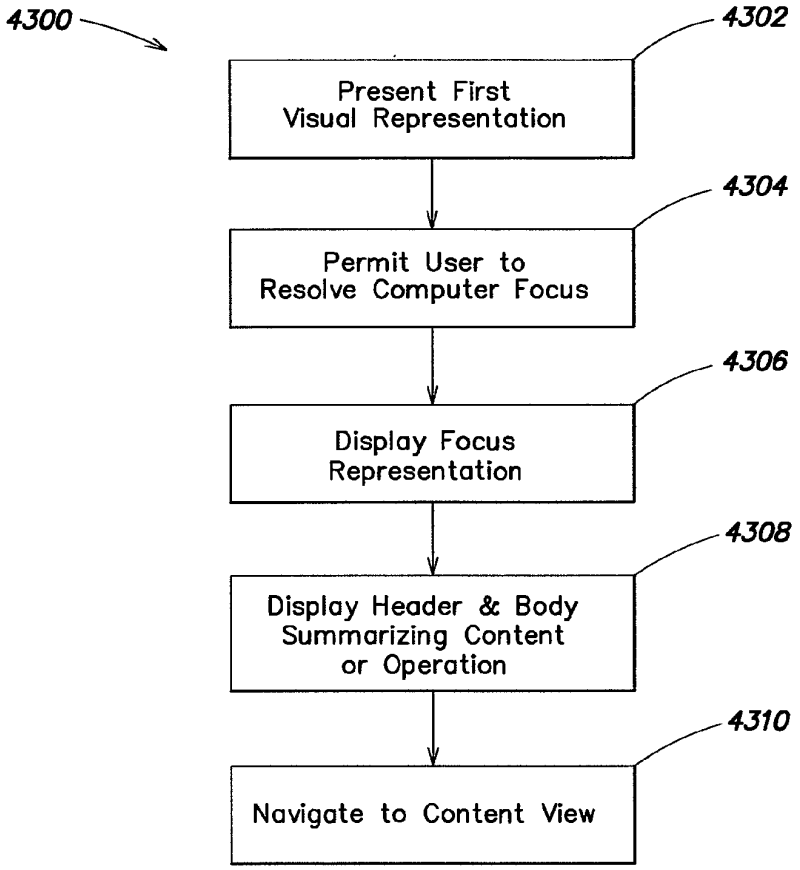
4300
4302
Present First Visual Representation
4304
Permit User to Resolve Computer Focus
4306
Display Focus Representation
4308
Display Header & Body Summarizing Content or Operation
4310
Navigate to Content View

FIG. 43

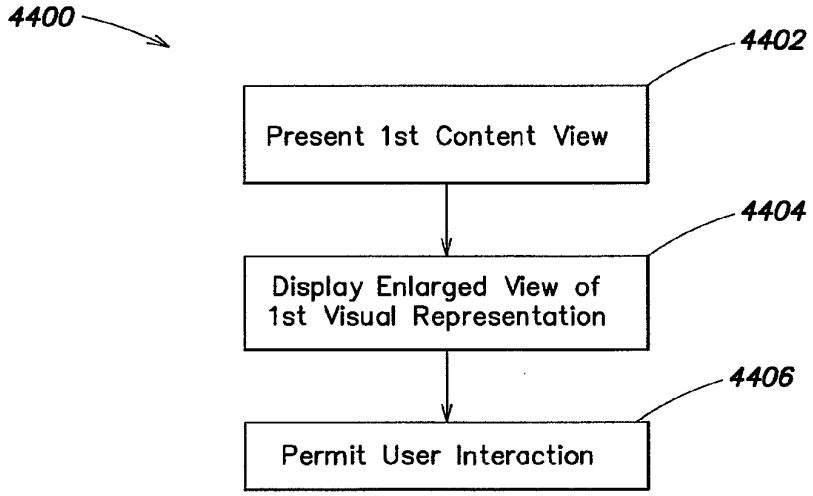
4400
4402
Present 1st Content View
4404
Display Enlarged View of 1st Visual Representation
4406
Permit User Interaction

FIG. 44

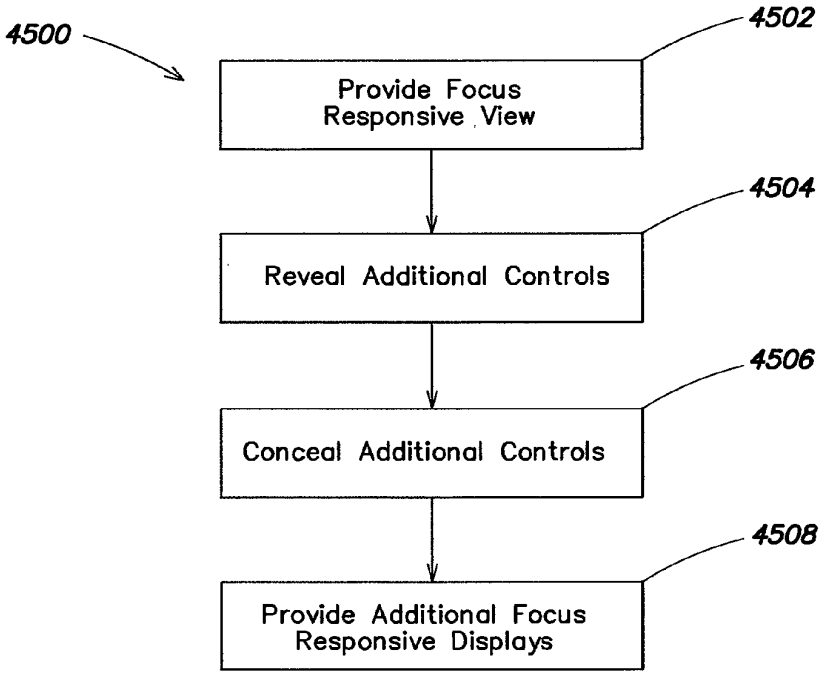
4500
4502
Provide Focus Responsive View
4504
Reveal Additional Controls
4506
Conceal Additional Controls
4508
Provide Additional Focus Responsive Displays

FIG. 45

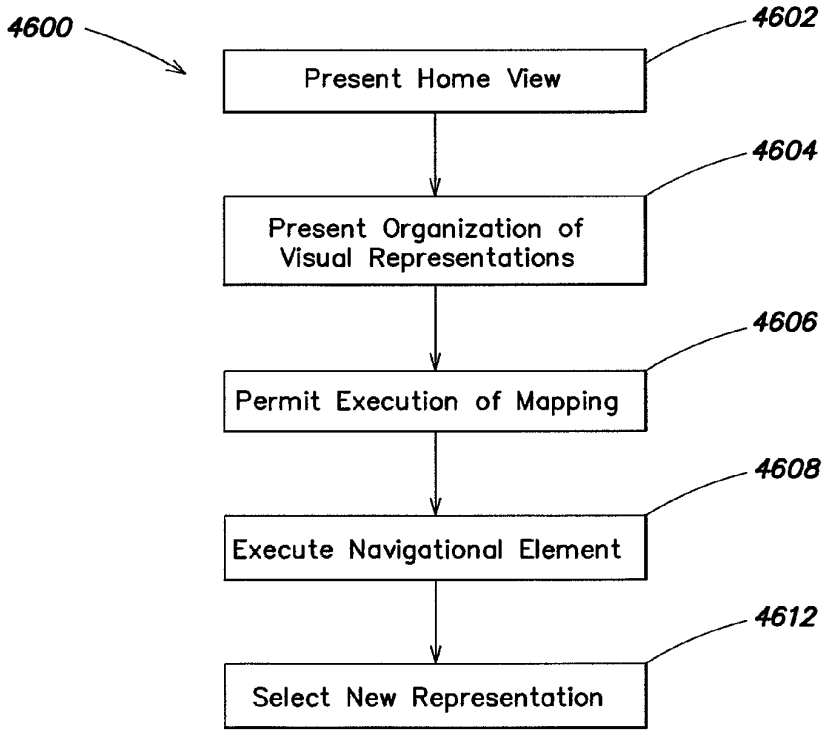
4600
4602
Present Home View
4604
Present Organization of Visual Representations
4606
Permit Execution of Mapping
4608
Execute Navigational Element
4612
Select New Representation

FIG. 46

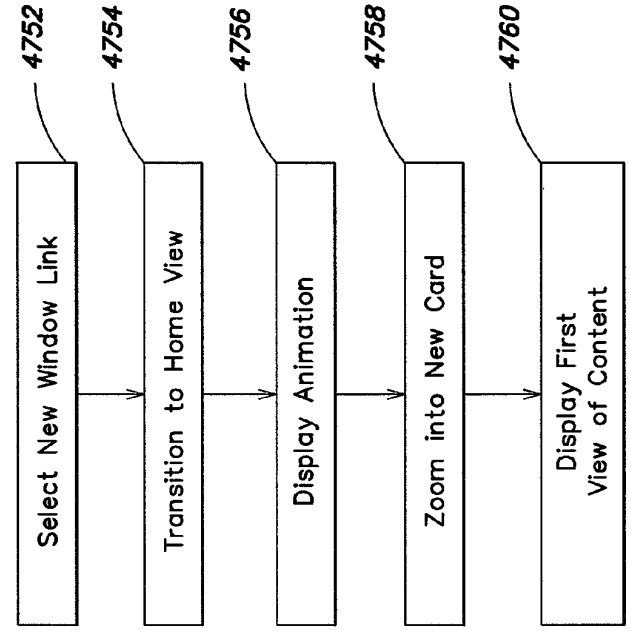

FIG. 47B

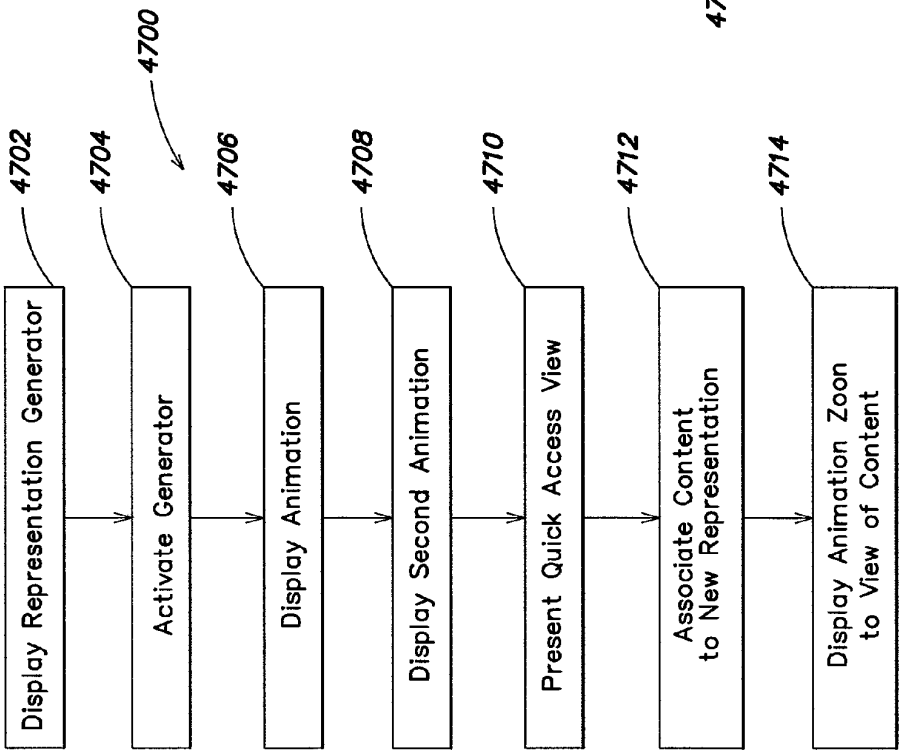

FIG. 47A

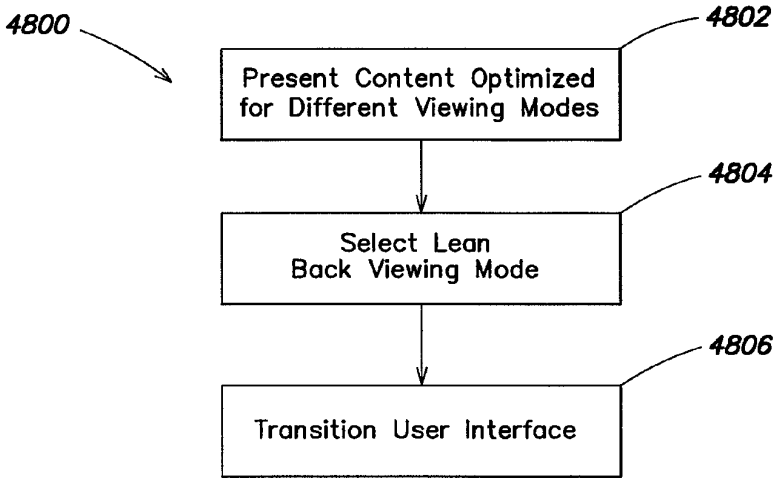

FIG. 48

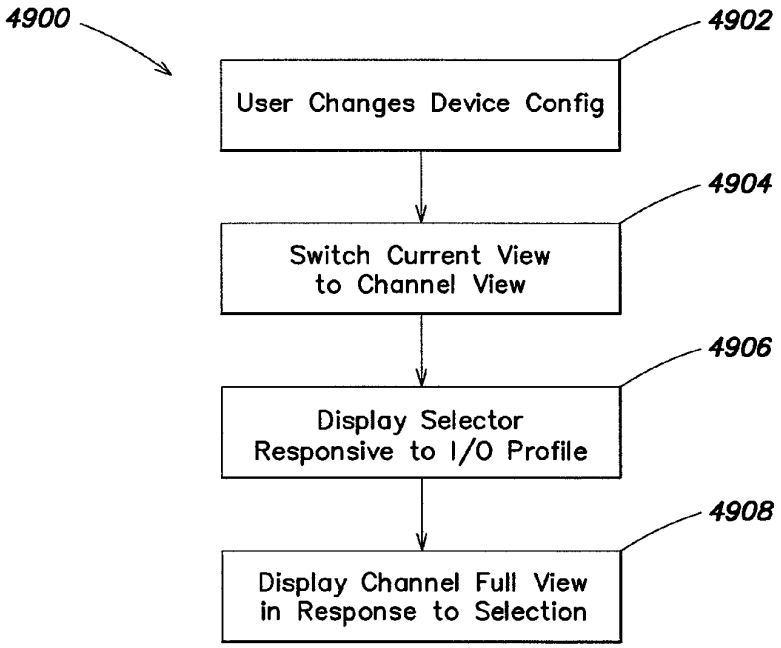

FIG. 49A

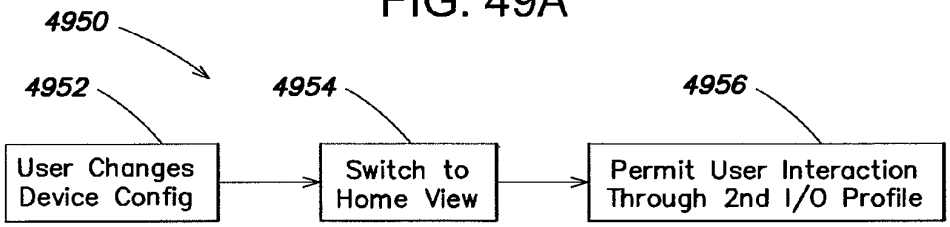

FIG. 49B

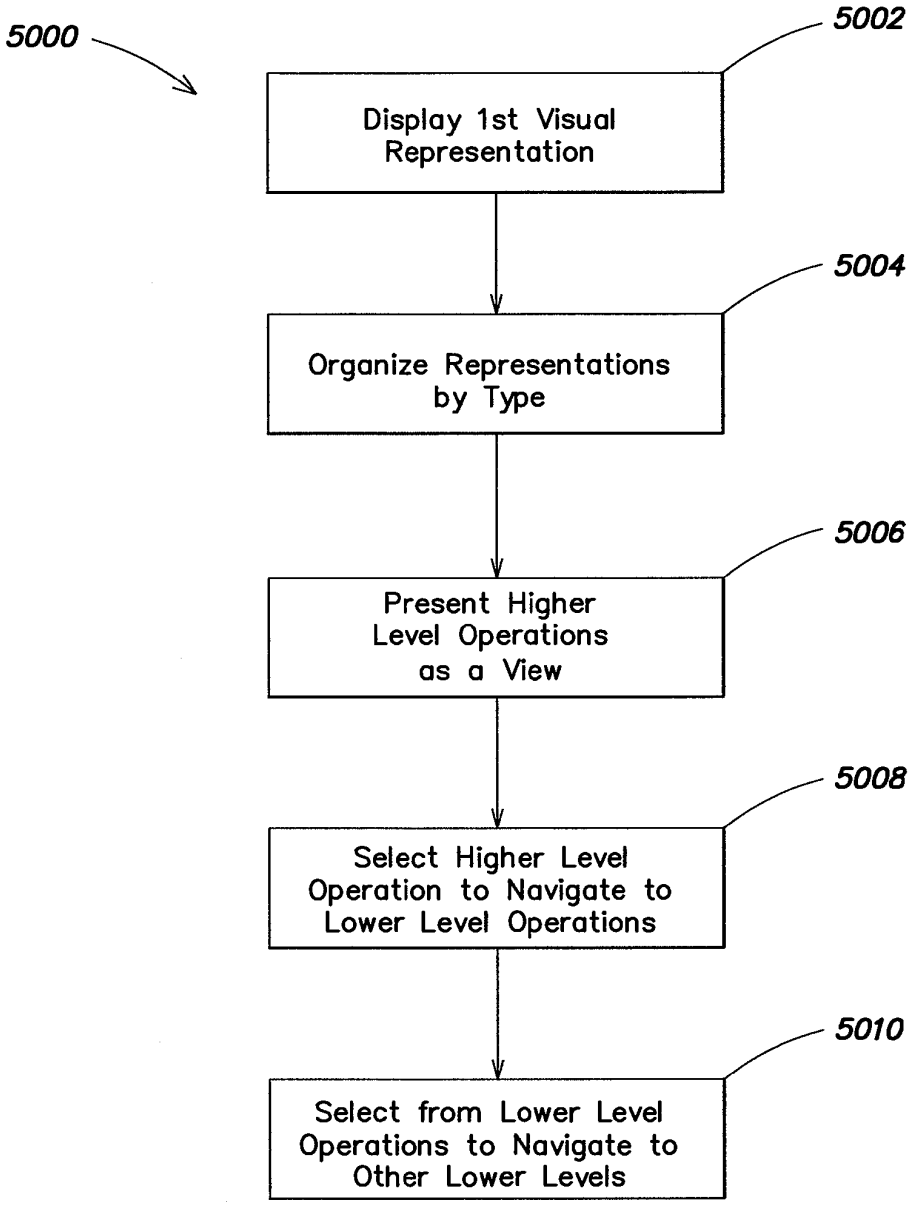
5000
5002
Display 1st Visual Representation
5004
Organize Representations by Type
5006
Present Higher Level Operations as a View
5008
Select Higher Level Operation to Navigate to Lower Level Operations
5010
Select from Lower Level Operations to Navigate to Other Lower Levels

FIG. 50

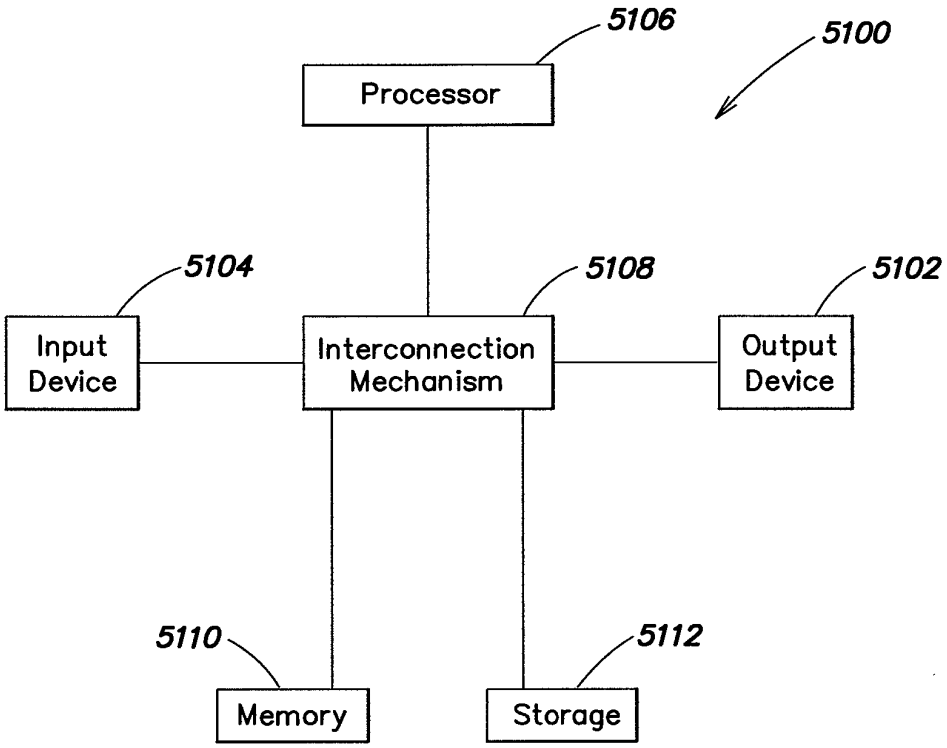
5106
5100
Processor
5104
5108
5102
Input Device
Interconnection Mechanism
Output Device
5110
5112
Memory
Storage

FIG. 51

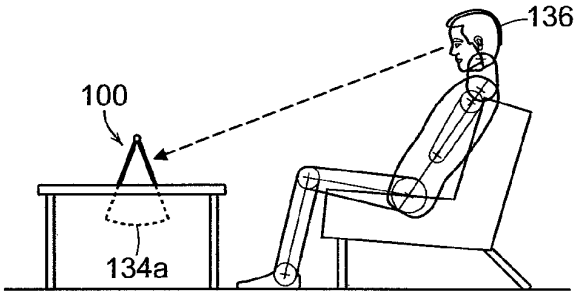

FIG. 52A

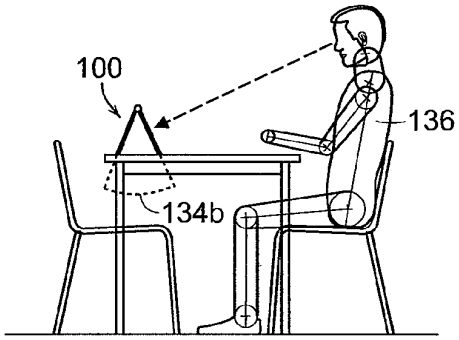

FIG. 52B

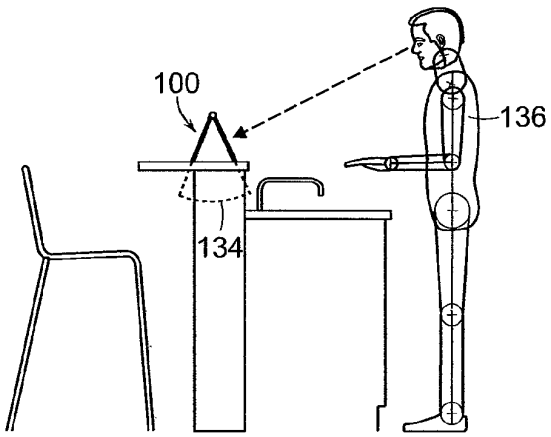

FIG. 52C

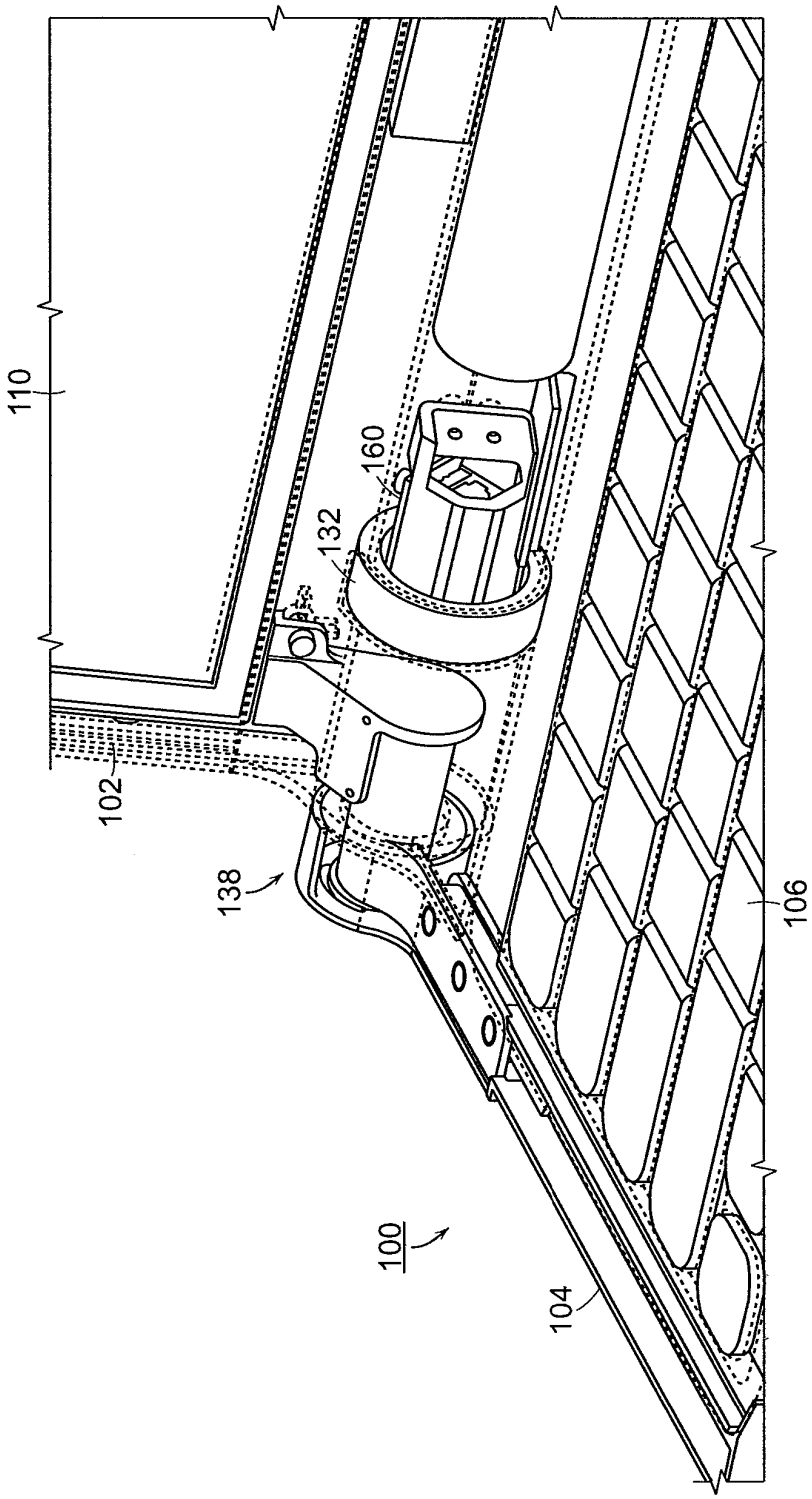

FIG. 53A

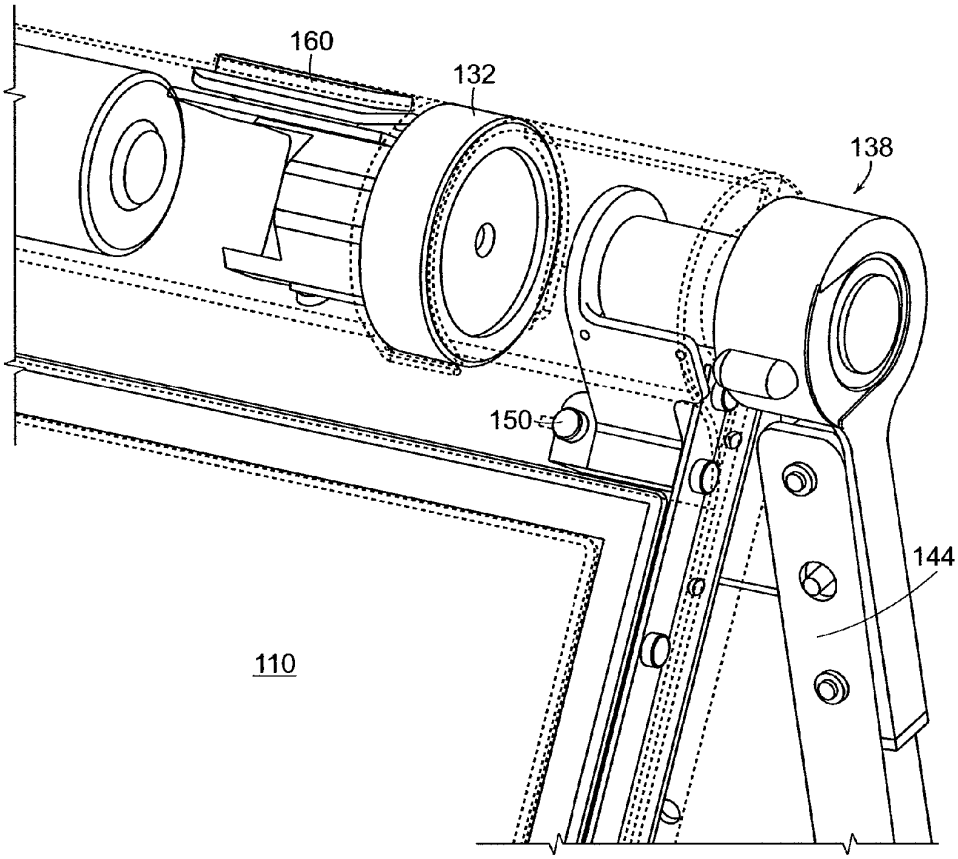

FIG. 53B

SYSTEM AND METHOD FOR STREAMLINING USER INTERACTION WITH ELECTRONIC CONTENT

RELATED APPLICATIONS

This application is a continuation of, and claims priority under 35 U.S.C. § 120 to, U.S. patent application Ser. No. 12/416,496 entitled "SYSTEM AND METHOD FOR STREAMLINING USER INTERACTION WITH ELECTRONIC CONTENT," filed on Apr. 1, 2009, which is a continuation-in-part of, and claims priority under 35 U.S.C. § 120 to, U.S. patent application Ser. No. 12/170,951 entitled "PORTABLE COMPUTER WITH MULTIPLE DISPLAY CONFIGURATIONS," filed on Jul. 10, 2008, which claims priority under 35 U.S.C. § 119(e) to U.S. Provisional Application Ser. No. 61/041,365, entitled "PORTABLE COMPUTER WITH MULTIPLE DISPLAY CONFIGURATIONS," filed Apr. 1, 2008, each of which is hereby incorporated herein by reference in its entirety. U.S. patent application Ser. No. 12/416,496 is a continuation-in-part of, and claims priority under 35 U.S.C. § 120 to U.S. patent application Ser. No. 12/170,939, entitled "PORTABLE COMPUTER WITH MULTIPLE DISPLAY CONFIGURATIONS," filed on Jul. 10, 2008, which claims priority under 35 U.S.C. 119(e) to U.S. Provisional Application Ser. No. 61/041,365, entitled "PORTABLE COMPUTER WITH MULTIPLE DISPLAY CONFIGURATIONS," filed Apr. 1, 2008, each of which is hereby incorporated herein by reference in its entirety. In addition, U.S. patent application Ser. No. 12/416,496 claims priority under 35 U.S.C. 119(e) to U.S. Provisional Application Ser. No. 61/041,365, entitled "PORTABLE COMPUTER WITH MULTIPLE DISPLAY CONFIGURATIONS," filed Apr. 1, 2008, which is hereby incorporated herein by reference in its entirety.

BACKGROUND

Much of the advancement in contemporary computer systems and services stems from the significant increases in computing power. Hand in hand with those increases, enhanced features sets have developed designed to utilize that computing power. Conventional wisdom suggests that the more features that can be provided to a particular computer user, the better the user's experience will be.

As computers have become more powerful and capable of providing more and more features, ordinary/typical computer users has not been able to keep up with availability of features and services. User may become frustrated by the inability to navigate the myriad (sometime unending) configurations and options provided in order to achieve something useful and/or workable to their ordinary use. Many users simply don't take advantage of provided features. Some outright ignore options and features that would simplify the use of their computer system. This may occur because of user ignorance or even fear and in some instances because the user lacks experience with new features—so the user doesn't know the feature can be useful.

User frustration is felt not only with respect to the newer more powerful computer systems being offered today, but also frustration abounds with respect to their computer's interaction with the Internet. The present movement on the Internet, often referred to as Web 2.0, also subscribes to conventional thinking in that more and more features are being packed into each and every aspect of the web experience. Third party service providers can be found for almost

any service—virtually no limitations have been found for the services that can be provided.

More typically, these on-line services provide very useful opportunities for the users who know how to take advantage of them—online photo management/sharing, online financial services, online marketplaces, online exchanges, web hosting, web development, dating services, social networking to name only a few. Very often these on-line services can be found for free or minimal costs. Typically, registration is the only requirement for participating in what is offered as free services. In other words, all that is required is the creation of a user name and password. Each service often attempts to outdo competitors by offering more and more options/features than their competitors.

SUMMARY

It is realized that the conventional wisdom with respect to such "feature packing" as discussed above suffers from significant flaws. Typical computer users simply can't take advantage of all the functionality offered, either the services and features offered by their own computer, or the services and features offered by online providers. The complexity of the interface (both hardware and software) hampers adoption, as does the volume of features offered. For example, third party service provides often find difficulty in subscribing new users, educating existing users, and providing integration of feature sets for the features they provide as well as those offered by other service providers.

Further complicating the user's interaction with computer devices and provided services is the inflexibility of the devices being used and their accompanying interfaces. It is realized that a device that can provide a user with a flexible portal into electronic content, that is, one that can be configured dynamically improves the user experience. For example, permitting transitions from a "lean back" mode of viewing (imagine, for example, a person watching television from their couch) to a "lean forward" mode of viewing (picture, for example, a laptop user typing away in a word processing application) to on a computer device improves the user experience. Further, user interfaces that are responsive to the user's dynamic configurations improve the user's ability to interact with the electronic content, from the machine itself, the internet, and even from both sources.

Accordingly, aspects and embodiments are directed to a graphical user interface that organizes interface elements into modes of content for presentation to a user. Different views of the modes of content are used to present the user with an interface that is responsive to configurations of the device and responsive to activity being performed by the user. Further the elements that comprise the graphical user interface are configured to present a summarized view of available actions and content, in order to simplify user interaction. The different views present different organizations of the interface elements and in some example display only certain ones of the modes of content in order to reduce the number of options a user must navigate to accomplish an objective.

According to one aspect of the present invention, a customized user interface for a computer system with a plurality selectable I/O profiles configured to present computer operations to a user in a format configured to a selected I/O profile is provided. The user interface comprises a map based graphical user interface displayed on the computer system, the map based user interface comprising a plurality of views of a plurality of visual representations of computer content, wherein the computer content includes at least one

of selectable digital content, selectable computer operations and passive digital content, and the plurality of visual representations of computer content rendered on the computer display, wherein the plurality of visual representations of computer content include an association to a first view of the plurality of views, the first view including the computer content, and wherein the each of the plurality of visual representations is responsive to focus and execution, wherein execution includes clicking on the visual representation, and an execution component comprising at least one computer hardware element configured to transition the computer system display between the plurality of views, wherein the execution component further comprises a view selector component configured to select one of the plurality of views for display on a computer system in response to a computer system configuration. According to one embodiment of the present invention, the execution component is further configured to transition between the plurality of views in response to execution of at least one of a computer system operation, a visual representation, a computer system configuration, and a change in computer to system configuration. According to another embodiment of the invention, the user interface further comprises a plurality of modes of content for the computer content rendered on the computer display.

According to one aspect of the present invention, the plurality of views are configured to organize modes of content into different views. According to another embodiment of the invention, the plurality of modes of content comprise at least one of a web content mode, a channel content mode, a media content mode, an application content mode, a communication content mode, and a passive content mode. According to another embodiment of the invention, the plurality of modes of content include a web content mode, wherein the web content mode is configured to display web based content for proximal viewing by a user. According to another embodiment of the invention, the plurality of modes of content include a channel content mode, wherein the channel content mode is configured to display web based content for non-proximal viewing by a user. According to another embodiment of the invention, the plurality of modes of content include a media content mode, wherein the media content mode is configured to display media based content for non-proximal viewing by a user mode. According to another embodiment of the invention, the plurality of modes of content include a web content mode, wherein the web content mode is optimized to display web based content for proximal viewing by a user. According to another embodiment of the invention, the plurality of modes of content include a channel content mode, wherein the channel content mode is optimized to display web based content for non-proximal viewing by a user. According to another embodiment of the invention, the plurality of modes of content include a media content mode, wherein the media content mode is optimized to display media based content for non-proximal viewing by a user mode.

According to one embodiment of the present invention, the media based content includes at least one of digital photos, digital audio files, and digital video files. According to another embodiment of the invention, the media based content is accessed through a remote service. According to another embodiment of the invention, the plurality of modes of content include a connect content mode, wherein the connect content mode is configured to display computer configuration operations for viewing by a user. According to another embodiment of the invention, the plurality of modes of content include an application content mode, wherein the application content mode is configured to display computer applications for use by a user. According to another embodiment of the invention, in the plurality of views includes a home view configured to organize a plurality of content modes. According to another embodiment of the invention, the plurality of views includes a channel view configured to organize a single content mode. According to another embodiment of the invention, the plurality of views includes a channel view configured to organize dual content modes. According to another embodiment of the invention, the plurality of modes of content include a passive content mode, wherein the passive content mode is configured to display web based content for non-proximal viewing without user interaction.

According to one embodiment of the present invention, the plurality of modes of content include a passive content mode, wherein the passive content mode is optimized to display web based content for non-proximal viewing without user interaction. According to another embodiment of the invention, the plurality of views includes a screen saver view configured to organize selected content modes for passive viewing. According to another embodiment of the invention, the plurality of views further comprise a first layer, wherein the first layer organizes computer operations, including navigation operations, into groups based on similar functional operation. According to another embodiment of the invention, the first layer maps to groupings of lower level functionality. According to another embodiment of the invention, the first layer include navigation operations maps to a seconding layer comprising computer operations for interacting with computer content. According to another embodiment of the invention, levels of computer functions are segregated based on proximity of the operation to a source of digital content, higher levels including operations that navigate to lower level operations that permit interaction with computer content.

According to one embodiment of the present invention, the first layer comprises a home view and a channel view, and the first layer is further configured to organize and simplify access to lower level functions. According to another embodiment of the invention, the visual representations comprise a lower layer relative to the first layer and include lower level functions. According to another embodiment of the invention, the plurality of views includes a home view organizing a plurality of visual representations of digital content, wherein the home view is displayed responsive to a computer system configuration. According to another embodiment of the invention, the computer system configuration comprises a physical positioning of the computer system about a longitudinal axis of rotation. According to another embodiment of the invention, the computer system configuration further comprises a physical positioning of a computer system display relative to a base of the computer system. According to another embodiment of the invention, the home view comprises a header display and a body display. According to another embodiment of the invention, the header display comprises a lateral bar extending from the left of the computer display screen to the right of the computer display screen. According to another embodiment of the invention, the user interface further comprises a search tool displayed in the header display, wherein the search tool is configured to accept search terms entered by a user and in response to execution, causes the computer system to navigate to a view of a first visual representation of digital content, wherein the digital content includes a search engine, and the search engine presents results for the search terms.

According to one embodiment of the present invention, the user interface further comprises a storage component configured to retain a previous view state. According to another embodiment of the invention, the execution component is further configured to cause the computer system to transition to a previous view in response to execution of a navigation element by a user. According to another embodiment of the invention, the user interface further comprises a navigation element disposed in the header display. According to another embodiment of the invention, the body display is rendered below the header display in the display screen of the computer system. According to another embodiment of the invention, the body comprises an organization of the plurality of visual representations of computer content rendered on the computer display. According to another embodiment of the invention, the user interface further comprises a display threshold for a screen rendered in the computer display. According to another embodiment of the invention, the home view is configured into pages based on the display of the computer system and the display threshold. According to another embodiment of the invention, the display threshold establishes a maximum number of visual representations display per page of the home view. According to another embodiment of the invention, the user interface further comprises an indication of visual representations displayed on adjacent pages of the home view, wherein the indication is display within the body of the home view.

According to one embodiment of the present invention, the user interface further comprises a nascent card displayed in the body of the home view, wherein the nascent card is configured to permit generation of additional visual representations of digital content. According to another embodiment of the invention, the execution component is further configured to execute a process for creating a visual representation in response to execution of the nascent card, wherein the process for creating a visual representation includes acts of transitioning to a quick access view, generating a mapping to online digital content, executing the mapping, and displaying a first view of the mapped digital content. According to another embodiment of the invention, the user interface further comprises a quick access view, wherein the quick access view is configured to permit user generation of a mapping between digital content and a visual representation. According to another embodiment of the invention, the quick access view permits a user to select from a display of frequently accessed web content to generate the mapping. According to another embodiment of the invention, the quick access view permits a user to select from a display of stored bookmarks to generate the mapping. According to another embodiment of the invention, the quick access view permits a user to enter a url to generate the mapping. According to another embodiment of the invention, the plurality of views includes a channel view, and the view selector component is further responsive to an integrated scroll wheel on the computer system. According to another embodiment of the invention, the view selector component is further configured to transition the computer system to the channel view in response to manipulation of the integrated scroll wheel.

According to one embodiment of the present invention, the channel view further comprises a channel selector. According to another embodiment of the invention, the channel selector comprises a display of a sequence of visual representations presenting a channel content mode. According to another embodiment of the invention, the display of the sequence of visual representations is responsive to manipulation of the integrated scroll wheel, and manipulation of the integrated scroll wheel causes the computer system to render a next visual representation in the display of the sequence of visual representations. According to another embodiment of the invention, the visual representations are responsive to execution by a selector, including a button. According to another embodiment of the invention, the button is available in a plurality of computer system configurations. According to another embodiment of the invention, the execution component is further configured to cause the computer system to transition to the first view including the digital content in response to execution of the selector by a user. According to another embodiment of the invention, the user interface further comprises a storage component configured to retain a current computer system configuration state.

According to one embodiment of the present invention, the storage component is further configured to retain a current view state. According to another embodiment of the invention, the execution component is further configured to transition the computer system display between the plurality of views, responsive to at least one of the current computer system configuration state and the current view state. According to another embodiment of the invention, the execution component is configured to transition to a channel view in response to manipulation of an integrated scroll wheel, when the computer system is in a laptop and an easel configuration. According to another embodiment of the invention, the user interface further comprises a scroll wheel threshold configured to require additional manipulations of the integrated scroll in order to cause the transition to the channel view, when the current computer system configuration state indicates the computer system is in a laptop configuration. According to another embodiment of the invention, the execution component is further configured to transition from the first view and a home view to a channel view in response to a change in computer system configuration state from laptop to easel.

According to another embodiment, the interface discussed above is displayed on a portable computer configurable between a plurality of display modes including a closed mode, a laptop mode and an easel mode. The portable computer further comprises a display component including a display screen, a base, a hinge assembly at least partially housed within the base and configured to pivotably couple the display component to the base, wherein the display component is rotatable about a longitudinal axis running along an interface between the display component and the base, wherein, in the closed mode, the display screen is disposed substantially against the base, wherein rotating the display component about the longitudinal axis up to approximately 180 degrees from the closed mode configures the portable computer into the laptop mode, and wherein rotating the display component about the longitudinal axis beyond approximately 180 degrees from the closed mode configures the portable computer into the easel mode.

According to one aspect of the present invention, a method for presenting a customized user interface for a computer system with a plurality selectable I/O profiles to a user is provided. The method comprises displaying a a map based graphical user interface on the computer system, the act of displaying the map based user interface includes acts of displaying a plurality of views of a plurality of visual representations of computer content, wherein the computer content includes at least one of selectable digital content, selectable computer operations and passive digital content, and displaying the plurality of visual representations of

computer content rendered on the computer display, wherein the plurality of visual representations of computer content include an association to a first view of the plurality of views, the first view including the computer content, and wherein the each of the plurality of visual representations is responsive to focus and execution, wherein execution includes clicking on the visual representation, and executing, by a computer processor, a transition in the computer system display between the plurality of views, wherein the act of executing includes an act of selecting one of the plurality of views for display on a computer system in response to a computer system configuration. According to one embodiment of the present invention, the act of executing occurs in response to an act of permitting execution of at least one of a computer system operation, a visual representation, a computer system configuration, and a change in computer system configuration. According to another embodiment of the invention, the method further comprises an act of displaying a plurality of modes of content for the computer content on the computer display, wherein the plurality of modes of content comprise at least one of a web content mode, a channel content mode, a media content mode, an application content mode, a communication content mode, and a passive content mode.

According to one embodiment of the present invention, the plurality of views are configured to organize modes of content into different views. According to another embodiment of the invention, the web content mode is configured to display web based content for proximal viewing by a user, wherein the channel content mode is configured to display web based content for non-proximal viewing by a user, wherein the media content mode is configured to display media based content for non-proximal viewing by a user mode, wherein the application content mode is configured to display computer applications for use by a user, wherein the communication content mode is configured to display computer configuration operations for viewing by a user, and wherein the passive content mode is configured to display web based content for non-proximal viewing without user interaction. According to another embodiment of the invention, in the plurality of views includes a home view and a channel view, and the method further comprises acts of organizing a plurality of content modes into the home view; and organizing at least one of a single content mode and a two content modes into the channel view. According to another embodiment of the invention, the plurality of views includes a screen saver view, and the method further comprises an act of organizing selected content modes for passive viewing in the screen saver view.

According to one embodiment of the present invention, the plurality of views includes a home view, and the method further comprises organizing a plurality of visual representations of digital content into the home view, wherein the home view is displayed responsive to a computer system configuration, displaying the home view in response to a compute system configuration, wherein the act of displaying the home view includes an act of displaying a header display and a body display in the home view, wherein the header display comprises a lateral frame extending from the left of the computer display screen to the right of the computer display screen, and wherein the body display is rendered below the header display in the display screen of the computer system. According to another embodiment of the invention, the computer system configuration comprises a physical positioning of the computer system display relative to a base of the computer system about a longitudinal axis of rotation. According to another embodiment of the invention, the method further comprises displaying a search tool in the header display, accepting entry of search terms through an I/O device, navigating to a view of a first visual representation of computer content, wherein the computer content includes a search engine, and the search engine presents results for the search terms, in response to an act of executing the search tool. According to another embodiment of the invention, the method further comprises an act of storing in a computer memory a previous view state. According to another embodiment of the invention, the method further comprises acts of displaying a navigation element in the header display, permitting execution of the navigation element by a user, and transitioning the computer system display to a previous view, in response to the act of permitting.

According to one embodiment of the present invention, the home view further comprises at least one display page and the method further comprising acts of displaying the plurality of visual representations of computer content rendered on the computer display in the body display, and displaying a maximal number of visual representations in a display page of the home view. According to another embodiment of the invention, the method further comprises displaying an indication of visual representations displayed on adjacent display pages in the home view, wherein the indication is displayed within the body of the home view. According to another embodiment of the invention, the method further comprises acts of displaying a nascent card in the body of the home view, permitting execution functionality associated with the nascent card, and generating an additional visual representations of digital content in response to execution of the functionality associated with the nascent card. According to another embodiment of the invention, the method further comprising act of executing a process for creating a visual representation in response to execution of the functionality associated with nascent card, wherein the process for creating a visual representation includes acts of transitioning to a quick access view, generating a mapping to online digital content, executing the mapping, and displaying a first view of the mapped digital content.

According to one embodiment of the present invention, the method further comprises acts of displaying a quick access view, permitting a user to select a source of digital content in the quick access view, and generating a mapping between the source of digital content and a visual representation in response to an act of selecting a source of digital content. According to another embodiment of the invention, the plurality of views includes a channel view, and the act of executing a transition occurs in response an act of activating an integrated scroll wheel on the computer system. According to another embodiment of the invention, the method further comprises an act of displaying a channel selector including an act of displaying a sequence of visual representations. According to another embodiment of the invention, the act of displaying the sequence of visual representations is responsive to manipulation of the integrated scroll wheel, and the method further comprises and act of displaying a next visual representation from the sequence of visual representations, in response to manipulation of the integrated scroll wheel. According to another embodiment of the invention, the method further comprises an act of storing in a computer memory a current computer system configuration state and a current view state. According to another embodiment of the invention, the act of executing, by a computer processor, a transition in the computer system display the execution component, includes an act of transi-

tioning the computer system display between the plurality of views, responsive to at least one of the current computer system configuration state and the current view state.

According to one embodiment of the present invention, the transition occurs to a channel view in response to manipulation of an integrated scroll wheel, when the computer system is in a laptop and an easel configuration. According to another embodiment of the invention, the transition occurs from at least one of the first view and a home view to a channel view in response to a change in computer system configuration state from laptop to easel.

According to one aspect of the present invention, a computer-readable medium having computer-readable signals stored thereon that define instructions that, as a result of being executed by a computer, instruct the computer to perform the method for presenting a customized user interface for a computer system with a plurality selectable I/O profiles to a user as described above is provided.

According to one aspect of the present invention, a system for presenting a customized user interface for a system with a plurality selectable I/O profiles is provided. The system comprises a first user interface component configured to display a plurality of views of a plurality of visual representations of computer content, wherein the computer content includes at least one of selectable digital content, selectable computer operations and passive digital content, a second user interface component configured to display the plurality of visual representations of computer content on the computer display, wherein the plurality of visual representations of computer content include an association to a first view of the plurality of views, the first view including the computer content, and wherein the each of the plurality of visual representations is responsive to focus and execution, wherein execution includes clicking on the visual representation, and an execution component configured to execute a transition in the computer system display between the plurality of views, wherein the execution component further comprises a view selector component act configured to select one of the plurality of views for display on a computer system in response to a computer system configuration. According to one embodiment of the present invention, the execution component is further configured to transition between the plurality of views in response to execution of at least one of a computer system operation, a visual representation, a computer system configuration, and a change in computer system configuration. According to another embodiment of the invention, the second user interface component is further configured to display a plurality of modes of content for the computer content rendered on the computer display, wherein the plurality of modes of content comprise at least one of a web content mode, a channel content mode, a media content mode, an application content mode, a communication content mode, and a passive content mode. According to another embodiment of the invention, the plurality of views are configured to organize modes of content into different views. According to another embodiment of the invention, the web content mode is configured to display web based content for proximal viewing by a user, wherein the channel content mode is configured to display web based content for non-proximal viewing by a user, wherein the media content mode is configured to display media based content for non-proximal viewing by a user mode, wherein the application content mode is configured to display computer applications for use by a user, wherein the communication content mode is configured to display computer configuration operations for viewing by a user, and wherein the passive content mode is configured to display web based content for non-proximal viewing without user interaction.

According to one embodiment of the present invention, the first user interface component is further configured to display a home view configured to organize a plurality of content modes, and a channel view configured to organize at least one of a single content mode and two content modes. According to another embodiment of the invention, the plurality of views includes a screen saver view configured to organize selected content modes for passive viewing. According to another embodiment of the invention, the first user interface component is further configured to display a home view organizing a plurality of visual representations of digital content, wherein the home view comprises a header display and a body display, and wherein the header display comprises a lateral frame extending from the left of the computer display screen to the right of the computer display screen, wherein the body display is rendered below the header display in the display screen of the computer system. According to another embodiment of the invention, the system is configured to permit selection of a computer system configuration, and the computer system configuration comprises a physical positioning of the computer system display relative to a base of the computer system about a longitudinal axis of rotation. According to another embodiment of the invention, the first user interface component is further configured to display a search tool in the header display, wherein the search tool is configured to accept search terms entered by a user, and wherein the execution component is further configured to causes the computer system to navigate to a view of a first visual representation of digital content, wherein the digital content includes a search engine, and the search engine presents results for the search terms in response to execution of the search tool.

According to one embodiment of the present invention, the system further comprises a storage component configured to retain a previous view state. According to another embodiment of the invention, the execution component is further configured to cause the computer system to transition to a previous view in response to execution of a navigation element by a user. According to another embodiment of the invention, the first user interface component further comprises a display of the navigation element in the header display. According to another embodiment of the invention, the body display comprises an organization of the plurality of visual representations of computer content rendered on the computer display, and the home view further comprises display pages in response to a display threshold establishing a maximal number of visual representations displayed per display page. According to another embodiment of the invention, the home view further comprises an indication of visual representations displayed on adjacent display pages of the home view, wherein the indication is displayed within the body of the home view. According to another embodiment of the invention, the second user interface component further comprises a nascent card displayed in the body of the home view, wherein the nascent card is configured to permit generation of additional visual representations of digital content. According to another embodiment of the invention, the execution component is further configured to execute a process for creating a visual representation in response to execution of the nascent card, wherein the process for creating a visual representation includes acts of transitioning to a quick access view, generating a mapping to online digital content, executing the mapping, and displaying a first view of the mapped digital content.

According to one embodiment of the present invention, the first user interface component further comprises a quick access view, wherein the quick access view is configured to permit user generation of a mapping between digital content and a visual representation. According to another embodiment of the invention, the plurality of views includes a channel view, and the view selector component is further responsive to an integrated scroll wheel on the computer system. According to another embodiment of the invention, the view selector component is further configured to transition the computer system to the channel view in response to manipulation of the integrated scroll wheel. According to another embodiment of the invention, the channel view further comprises a channel selector comprising a display of a sequence of visual representations presenting a channel content mode. According to another embodiment of the invention, the display of the sequence of visual representations is responsive to manipulation of the integrated scroll wheel, and manipulation of the integrated scroll wheel causes the computer system to render a next visual representation in the display of the sequence of visual representations. According to another embodiment of the invention, the system further comprises a storage component configured to retain a current computer system configuration state and a current view state. According to another embodiment of the invention, the execution component is further configured to transition the computer system display between the plurality of views, responsive to at least one of the current computer system configuration state and the current view state. According to another embodiment of the invention, the execution component is configured to transition to a channel view in response to manipulation of an integrated scroll wheel, when the computer system is in a laptop and an easel configuration. According to another embodiment of the invention, the execution component is further configured to transition from the first view and a home view to a channel view in response to a change in computer system configuration state from laptop to easel.

According to one embodiment, a portable computer is configurable between various modes, including a closed mode, a laptop mode, an easel mode, a flat mode and a frame mode. The portable computer may comprise a display component including a display screen, a base, and a hinge assembly at least partially housed within the base and configured to pivotably couple the display component to the base. The display component may be rotatable about a longitudinal axis running along an interface between the display component and the base. In the closed mode, the display screen may be disposed substantially against the base, and rotating the display component about the longitudinal axis up to approximately 180 degrees from the closed mode may configure the portable computer into the laptop mode. Rotating the display component about the longitudinal axis beyond approximately 180 degrees axis from the closed mode may configure the portable computer into the easel mode.

In one example of the portable computer, the display component is rotatable about the longitudinal axis up to approximately 320 degrees from the closed mode. In another example, the portable computer comprises a display orientation module that displays content on the display screen in one of a plurality of orientations relative to the longitudinal axis. The orientation of the displayed content may be dependent on the current display mode of the portable computer, or may be configurable responsive to a user input. The portable computer may further comprise a mode sensor which detects a current display mode of the portable computer, and the display orientation module may display content on the display screen in an orientation dependent on the current display mode detected by the mode sensor. Depending on the hinge assembly used, the longitudinal axis may comprises multiple parallel axes, and the hinge assembly may be configured to permit rotation of the display component about any of the multiple parallel axes to configure the portable computer between the plurality of display modes.

Still other aspects, embodiments, and advantages of these exemplary aspects and embodiments, are discussed in detail below. Moreover, it is to be understood that both the foregoing information and the following detailed description are merely illustrative examples of various aspects and embodiments, and are intended to provide an overview or framework for understanding the nature and character of the claimed aspects and embodiments. Any embodiment disclosed herein may be combined with any other embodiment in any manner consistent with the objects, aims, and needs disclosed herein, and references to "an embodiment," "some embodiments," "an alternate embodiment," "various embodiments," "one embodiment" or the like are not necessarily mutually exclusive and are intended to indicate that a particular feature, structure, or characteristic described in connection with the embodiment may be included in at least one embodiment. The appearances of such terms herein are not necessarily all referring to the same embodiment.

BRIEF DESCRIPTION OF THE DRAWINGS

Various aspects of at least one embodiment are discussed below with reference to the accompanying figures, which are not intended to be drawn to scale. The figures are included to provide illustration and a further understanding of the various aspects and embodiments, and are incorporated in and constitute a part of this specification, but are not intended as a definition of the limits of the invention. Where technical features in the figures, detailed description or any claim are followed by references signs, the reference signs have been included for the sole purpose of increasing the intelligibility of the figures, detailed description, and/or claims. Accordingly, neither the reference signs nor their absence are intended to have any limiting effect on the scope of any claim elements. In the figures, each identical or nearly identical component that is illustrated in various figures is represented by a like numeral. For purposes of clarity, not every component may be labeled in every figure. In the figures:

FIG. **1** is an illustration of one example of a portable computer, according to aspects of the invention, in a "laptop" configuration;

FIG. **2** is a screen shot illustrating one example of a graphical user interface showing a home view, according to aspects of the invention;

FIGS. **3**A-C are screen shots illustrating examples of a graphical user interface showing web page views, according to aspects of the invention;

FIG. **4** is a perspective view of the portable computer of FIG. **1** in the easel mode;

FIG. **5** is a screen shot illustrating one example of a graphical user interface showing a quick access view, according to aspects of the invention;

FIG. **6** is a screen shot illustrating one example of a graphical user interface showing a bookmark view, according to aspects of the invention;

FIGS. **7**A-B are screen shots illustrating examples of a graphical user interface showing a web page view, according to aspects of the invention;

FIG. **8** is a screen shot illustrating one example of a graphical user interface showing a home view, according to aspects of the invention;

FIG. **9** is an illustration of an example conceptual model of a graphical user interface, according to aspects of the invention;

FIG. **10** illustrates an example process for generating a visual representation of computer content, according to aspects of the invention;

FIG. **11** is a block diagram of one example of a portable computer user interface architecture, according to aspects of the invention;

FIG. **12** is a screen shot illustrating one example of a graphical user interface, according to aspects of the invention;

FIG. **13** is a screen shot illustrating another example of a graphical user interface according to aspects of the invention;

FIG. **14** illustrates an example of a behavior model for display of cards responsive to computer focus, according to aspects of the invention;

FIG. **15**A is a screen shot of an example web card in a non-hover state, according to aspects of the invention;

FIG. **15**B is a screen shot of an example web card in a hover state, according to aspects of the invention;

FIG. **16** is a screen shot of examples of option views of cards, according to aspects of the invention;

FIG. **17** is an illustration of an example of the portable computer in the laptop mode, according to aspects of the invention;

FIGS. **18**A-E illustrate examples of a header display responsive to focus and user activity, according to aspects of the invention;

FIG. **19** is a screen shot of a web page view including a toolbar, according to aspects of the invention;

FIGS. **20**A-B are screen shots illustrating examples of a graphical user interface showing a channel page view, according to aspects of the invention;

FIG. **21** is a screen shot illustrating examples of a graphical user interface showing a channel full view, according to aspects of the invention;

FIG. **22** is a screen shot illustrating one example of a graphical user interface showing a bookmark view, according to aspects of the invention;

FIG. **23** is a screen shot illustrating one example of a graphical user interface showing a channel view, according to aspects of the invention;

FIG. **24** is a screen shot illustrating one example of a graphical user interface showing a channel page view, according to aspects of the invention;

FIGS. **25**A-B are illustrations of example logical diagrams of the behavior for the channel view, according to aspects of the invention;

FIG. **26** is an illustration of the portable computer configured into a "frame" mode, according to aspects of the invention;

FIG. **27** is an illustration of the portable computer configured into a "flat" mode, according to aspects of the invention;

FIG. **28** is an illustration of an example logical diagram of the behavior for the channel view, according to aspects of the invention;

FIGS. **29**A-B are screen shots illustrating example graphical user interfaces showing a web page view with a share interface, according to aspects of the invention;

FIG. **30** is a screen shot illustrating an example graphical user interface showing a shared card, according to aspects of the invention;

FIG. **31** is a screen shot illustrating an example graphical user interface showing a shared card notification, according to aspects of the invention;

FIG. **32** is a screen shot illustrating an example graphical user interface showing a notification messages, according to aspects of the invention;

FIG. **33** is a screen shot illustrating an example graphical user interface showing a notification, according to aspects of the invention;

FIG. **34** is a screen shot illustrating an example graphical user interface showing a notification, according to aspects of the invention;

FIG. **35** is a screen shot illustrating an example graphical user interface showing a web page view with a download interface, according to aspects of the invention;

FIG. **36** is a flow diagram of one example process for interpreting executable operations into streamlined operations according to aspects of the invention;

FIG. **37** is a flow diagram of one example process for permitting selection of executable operations in content according to aspects of the invention;

FIG. **38** is a flow diagram of one example process for transforming executable operations into remote storage operations according to aspects of the invention;

FIG. **39** is a flow diagram of one example process for obtaining service access information, according to aspects of the invention;

FIG. **40** is a flow diagram of one example process for pre-configuring a streamlined device, according to aspects of the invention;

FIG. **41**A is a screen shot illustrating an example graphical user interface showing a web page view with a print interface, according to aspects of the invention;

FIG. **41**B are screen shots illustrating examples of print and download interfaces, according to aspects of the invention;

FIG. **42** is a flow diagram of one example process for streamlining user interactions with digital content, according to aspects of the invention;

FIG. **43** is a flow diagram of one example process for streamlining user interactions with computer content, according to aspects of the invention;

FIG. **44** is a flow diagram of one example process for permitting a user to interact with computer content, according to aspects of the invention;

FIG. **45** is a flow diagram of one example process for providing consistent accessibility to computer content, according to aspects of the invention;

FIG. **46** is a flow diagram of one example process for providing consistent navigation operations to a user, according to aspects of the invention;

FIGS. **47**A-B are flow diagrams of example processes for generating a user interface element, according to aspects of the invention;

FIG. **48** is a flow diagram of one example process for permitting a user to select a viewing mode for a streamlined device, according to aspects of the invention;

FIG. **49**A is a flow diagram of one example process for transitioning between a lean forward view to a lean backward view, according to aspects of the invention;

FIG. **49**B is a flow diagram of one example process for transitioning between user views, according to aspects of the invention;

FIG. **50** is a flow diagram of one example process for organizing a plurality of views and GUI elements into a consistent presentation, according to aspects of the invention;

FIG. **51** is a block diagram of a computer system for streamlining user interactions with computer content according to aspects of the invention; and

FIGS. **52**A-C are diagrams illustrating different positions of the portable computer of FIG. **4** in easel mode;

FIG. **53**A is an illustration of a portion of the portable computer of FIG. **1** in the laptop mode, illustrating a hinge assembly according to aspects of the invention; and

FIG. **53**B is an in illustration of a portion of the portable computer of FIG. **1** in the easel mode, illustrating the hinge assembly according to aspects of the invention.

DETAILED DESCRIPTION

It is realized that the conventional wisdom with respect to such "feature packing" as discussed above suffers from significant flaws. Typical computer users simply can't take advantage of all the functionality offered, either the services and features offered by their own computer, or the services and features offered by online providers. The complexity of the interface (both hardware and software) hampers adoption, as does the volume of features offered. For example, third party service provides often find difficulty in subscribing new users, educating existing users, and providing integration of feature sets for the features they provide as well as those offered by other service providers.

Synergy between services providers can be found and exploited by even the most novice user through streamlined computer systems and user interface presentation. According to one aspect, the interplay between various third party services and computer features can be readily appreciated by even the most novice user because the various functionality and features sets are easily accessible through the streamlined access controls and consistent user interfaces. As discussed further below, in one example, the graphical user interface improves transitions from one service to another, through a consistent view of available content. A user is able to navigate easily and quickly from one content provider to another user the organized view. The elements that comprise the view further facilitate navigation and transition by, for example, retaining state information an in another example by remaining persistent to the view.

According to another aspect, streamlining the computer system/device the user interacts with includes establishing a first set of I/O devices that a user needs to operate and providing that first set of I/O devices as a physical configuration of the device. Additionally, providing the user the ability to change from the first set of I/O devices, a first I/O profile, to another at will improves the user experience and permits the user to dynamically select a preferred I/O profile best suited to the user's present need. According to one embodiment, user selection includes transitioning from a lean back mode to a lean forward mode and vice versa. In one embodiment, the user's computer device is configured to have multiple I/O profiles that can be selected by physically manipulating the orientation of the computer device itself.

According to another aspect, streamlining user interactions with the computer system/device includes representing computer based content in visual representations that render computer operations/behavior in a consistent manner. The visual representations are adapted to permit easy user interaction even upon selection of a first I/O profile or the change in selection of an I/O profile. According to one embodiment, the visual representations are rendered as cards, as discussed in more detail below. Different types of cards may be employed to render different types of available content. For example, web based content, may be rendered as a web card (e.g. FIG. **2**, **206**) that associated with a mapping to web content. Some web cards map directly to web pages and in response to selection of the web card the computer device executes the mapping and displays a web view of the content. Other cards may be used to provide interactive displays selectable by a user. In another example, system operations are displayed as system cards (e.g. FIG. **2**, **212**), which are associated with mappings to system operations, for example communications configurations, and may comprise a settings card, among other system options. Another type of card includes a channel card (e.g. FIG. configured to stream web based content in a manner that allows for summarization of content, while still providing the ability to fully appreciate the summarized content.

Those skilled in the art will appreciate that previous attempts have been made to present summary views of available content. However, known summarized content typically suffers from significant flaws. For example summarization of web based content simply reduces the display size of the information in the content. With respect to news headlines, for example, this often prevents a user from being able to appreciated the summarize content. Quite simply truncating a headline prevents the user from understanding the context of the portion of the headline s/he is able to read. In other examples, headlines are display to such a reduce size that an average computer user simply cannot read or appreciate them. Using channel cards according to aspects and embodiments, summarized content may be presented in a manner that permits appreciation and interaction with the summarized content itself. In another example, channel card are configured to present a streamlined view that cannot only be appreciated and interacted, but may be transitioned from one mode of viewing to another without loss of the ability to appreciate and interact with the streamlined view.

According to one aspect, streamlining of the user device and streamlining of the user interface provided in such devices leads to simplified interaction between a user and features. The streamlining may impact not only features of the system, but features provided by services accessed by the system. Streamlined activity leads directly to better adoption, understanding and integration of both new and old features available to users. The consistency of user experience even with third party service providers, for example, fosters familiarity not only with a particular user and his/her interactions with a particular device, but also with other users of the same/similar device. A common experience may be created for multiple users, fostering a community experience. According to one example, providing a common experience includes establishing a global profile for a user of a streamlined device. The global profile, in some examples, is retained in remote storage, and accessed upon start up of any streamlined device. The global profile permits the user's experience to be consistent even across multiple streamlined devices. In one example, configurations and customizations are retained in remote storage; changes on one device may be written to remote storage, propagating changes across multiple streamlined devices that access the remote storage. Thus a common experience is also provided across multiple devices.

According to another aspect, the common experience may also include a community aspect. The community aspect includes sharing of content between users, sharing of con-

tent and configurations, sharing of content, configurations, and customizations, among many options. In particular, sharing may involve the transmission of user interface elements to other users. In one example, a user may share a card and any of its configurations with another user. Access to the shared user interface elements, in some embodiments, facilitates communal computer usage. In one example, a first user may be watching media on their streamlined device, another user known to the first user, may receive a user interface element that retains information related to the accessed content and information related to the present context. That is for the first user watching a movie, the first user may share the user interface element through which s/he is accessing the move, and permit the another user not only to watch the movie, but to take up the movie at the same point in time, so in essence, they get to enjoy the movie together. Content and context retention by user interface elements that can be shared provides unique advantages to the users of the streamlined devices.

According to another aspect, various operations provides on conventional systems are adapted for streamlined processing. In on example, operations that require large amounts of computer storage are transformed in remote storage requests. In one embodiment, a streamlined device is configured to identify local storage request and transform them into a storage request to an on-line service provider identified in a user and/or device profile. In another embodiment, the system prompts a user to identify a service provider in response to a local request. Various operations may be transformed, including download and print operations, among others.

It is to be appreciated that embodiments of the methods and apparatus discussed herein are not limited in application to the details of construction and the arrangement of components set forth in the following description or illustrated in the accompanying figures. The methods and apparatus are capable of implementation in other embodiments and of being practiced or of being carried out in various ways. Examples of specific implementations are provided herein for illustrative purposes only and are not intended to be limiting. In particular, acts, elements and features discussed in connection with any one or more embodiments are not intended to be excluded from a similar role in any other embodiments.

Also, the phraseology and terminology used herein is for the purpose of description and should not be regarded as limiting. Any references to embodiments or elements or acts of the systems and methods herein referred to in the singular may also embrace embodiments including a plurality of these elements, and any references in plural to any embodiment or element or act herein may also embrace embodiments including only a single element. References in the singular or plural form are not intended to limit the presently disclosed systems or methods, their components, acts, or elements. The use herein of "including," "comprising," "having," "containing," "involving," and variations thereof is meant to encompass the items listed thereafter and equivalents thereof as well as additional items. References to "or" may be construed as inclusive so that any terms described using "or" may indicate any of a single, more than one, and all of the described terms. Any references to front and back, left and right, top and bottom, and upper and lower are intended for convenience of description, not to limit the present systems and methods or their components to any one positional or spatial orientation.

Device Examples and Configuration Options

Various aspects, including the integration between the user interface, its views, and navigation options are further illustrated in the user device itself. According to one embodiment, the user interface and the visual representations that comprise the interface are configured to be responsive to the physical configuration of the user device. In one example, the view presented to user is configured to be responsive to the mode/configuration of the device.

According to one aspect, systems and methods are provided for simplifying the presentation of multi-media features and options into an integrated and streamlined presentation format. Streamlining presentation includes reducing the number of options that a user must navigate/configure in order to take advantage of new systems and features, simplifying the process of adoption and education. In one embodiment a system is provided with only the physical components necessary to achieve streamlined presentation of both operating system features and integration of third party services. For example, a streamlined hardware device provides for (in comparison to typical desktop and laptop systems) a reduced user input platform as a first I/O profile, comprising in one configuration a scroll wheel and a button interface. Other I/O profiles are available for user selection by manipulation of the device itself. In one embodiment, an easel mode presents the user with the first I/O profile and by rotating the computer device about a longitudinal axis; the user may select a second I/O profile, including a keyboard. The transition from one I/O profile to another may also cause the computer device to alter its display. In one example, the user interface provided to the user is responsive to selection of device mode and/or selection of I/O profile.

It is to be appreciated that reducing the number of I/O device achieves simplicity of design and ease of operation by the user, and at the same time may increase the complexity of the graphical user interfaces needed to support interaction with systems and third parties that anticipate, rely on, or expect additional I/O devices. Streamlining device operation by the user is balanced against sophistication of user the interface required to enable user interaction with the same features used with additional I/O devices. According to one embodiment, the user interface layer provides simplified accessibility based on the device's I/O platform, and for some embodiments, the user interface layer is responsive to device configurations that change the device's I/O capabilities. In other embodiments, the user interface is responsive to changes in the device's mode. In some examples, changes in device mode and changes I/O profile will occur together, however, in other examples a change in mode or a change in I/O profile will not require a corresponding change in profile or mode respectively.

One example of a streamlined device includes a portable computer that is configurable between a laptop mode (in which the portable computer has a conventional laptop appearance) and an easel mode in which the base of the computer and its display component stand upright forming an inverted "V," as discussed further herein. Certain aspects and embodiments are directed to a portable computer that is configurable between different operating modes, including a laptop mode (in which the portable computer has a conventional laptop appearance), a flat mode, a frame mode, and an easel mode in which the base of the computer and its display component stand vertically forming an inverted "V," as discussed further herein. Reference to modes of the computer, modes of the device and intended to include the physical configuration of the portable computer/device.

The portable computer is capable of different display formats and functionality in the different modes, and includes a graphical user interface that may work seamlessly with the computer hardware to provide a unified, comfort-

able, holistic user experience. In particular, the portable computer may provide access to a wide array of functions, both those traditionally provided by computing devices and those traditionally provided by other passive information devices. For example, the hardware and software, including the graphical user interface, of the portable computer may be focused toward providing access to entertainment media, such as audio and video (e.g., playing music, streaming video, viewing photographs, etc.), email, and internet, while also providing state-of-the-art computer processing capability.

Referring to FIG. **1**, there is illustrated one example of a portable computer according to aspects of the invention. In FIG. **1**, the portable computer **100** is illustrated in the "laptop" mode, with the display component **102** inclined at a viewing angle from the base **104**. The display component **102** is pivotably coupled to the base **104** by a hinge assembly (not shown) that allows the display component to be rotated with respect to the base. The hinge assembly may include a single or multiple hinges, which may be any of a variety of hinge types, including, but not limited, to single-axis hinges, multiple-axis hinges, geared hinges, etc. In one example, the hinge assembly allows the display component **102** to be rotated (or tilted) about a longitudinal axis **101** running along an interface between the display component and the base **104**, as illustrated in FIG. **1** and discussed further below. The base **104** includes a keyboard **106** and internal electronic components (not shown), such as a central processing unit, memory, and other components necessary to operate the portable computer, as known to those skilled in the art. In some embodiments, the base **104** may also include a touch pad **108** or trackball (not shown) for receiving user commands, as known to those skilled in the art.

Still referring to FIG. **1**, the display component **102** includes a display screen **110**, and may also include a camera **112**, microphone **114**, and infrared receiver **116**, as discussed further below. It is to be appreciated that the locations of the camera **112**, microphone **114** and infrared receiver **114** are not limited to the example illustrated in FIG. **1**, and may be placed in other locations on the display component **102** and/or base **104**, as would be recognized by those skilled in the art. The display component **102** may also include cushions **118** that provide soft contact points between the base **104** and the display component **102** when the portable computer is closed. In one example, the cushions **118** are made of rubber. However, it is to be appreciated that the invention is not so limited, and the cushions **118** may comprise materials other than rubber, including, for example, a polymer, felt, or other suitable materials as would be recognized by those skilled in the art.

Referring to FIG. **4**, there is illustrated an example of the portable computer **100** configured into the easel mode. To convert the portable computer **100** from the laptop mode (or closed position) into the easel mode, the display component **102** may be folded away from the base **104**, in the same direction as to open the computer (i.e., to configure the computer from the closed position into the laptop mode) such that the base **104** and the display component **102** form an inverted "V" shape with the bottom of the base and the back of the display component face another, as illustrated in FIG. **4**. In the easel mode, the display screen **110** is visible and accessible on one side of the portable computer **100** and the keyboard **106** (not shown in FIG. **4**) is visible and accessible on the other side.

As illustrated in FIG. **4**, in one embodiment, the portable computer may comprise integrated hardware volume controls, including a volume control button **294** and a mute button **296**. In one example, the volume control button **294** may be a rocker switch that allows a user to easily increase or decrease the volume of audio played through the speakers **128**. When the user presses the volume control button **294**, a volume indicator may temporarily appear on the display screen **110**, to provide a visual indication of the amount by which the volume is being increased or decreased. Similarly, pressing the mute button **296** may cause a visual indication that the volume is muted to appear on the display screen **110**.

According to one embodiment, when the portable computer **100** is configured into the easel mode, the visual display on the display screen **110** is automatically rotated 180 degrees such that the information appears "right-way-up," even through the display screen is upside-down compared to when the portable computer is in the laptop mode. Thus, a user may simply "flip" the portable computer **100** into the easel mode and immediately be able to comfortably view information on the display screen **110**, without having to access display screen controls to adjust the orientation of the visual display. In one embodiment, the portable computer **100** includes an orientation (or mode) sensor that is configured to detect whether the portable computer is in the laptop mode or the easel mode, and to adjust the display accordingly. The orientation sensor may be incorporated into the base component **104**, for example, underneath the keyboard **106**, or into the display component. In one example, locating the orientation sensor in the display component **102**, rather than the base **104**, may provide more robust detection and therefore, may be presently preferred in some embodiments. The orientation sensor may be used to determine a precise relative orientation of the base component **104** with respect to the display component **102**, or vice versa, for example, to determine whether the device is in the laptop mode, easel mode, or some point in between the two modes. In one example, the orientation sensor includes an accelerometer whose output is fed to the computer operating system (or to dedicated logic circuitry) which then triggers a display inversion as appropriate.

According to one embodiment an accelerometer is used to detect a configuration of the portable computer, although, it is to be appreciated that other sensors and devices may be used to determine a configuration. According to another embodiment, the portable computer may include integrated "navigation" hardware that allows a user to easily and comfortably control various features and functions of the portable computer, to manipulate content displayed on the portable computer, and to interact with visual representations of content display in a user interface. For example, as discussed above, the portable computer **100** may comprise a scroll wheel **132** that allows a user to control, adjust and/or select various functionality of the portable computer. According to another embodiment, the scroll wheel **132** may be used to provide "hardware navigation" through information, such as menus, icons, etc., displayed on the display screen **110**, as discussed further below with reference to FIG. **17**. A common display configuration used in conventional computers is a "desktop" view in which multiple icons representing links to various programs or applications are displayed over a background image. Navigation may be conventionally performed using a mouse, touch pad or trackball, as known to those skilled in the art.

According to another embodiment, the portable computer **100** includes a streamlined graphical user interface that supports "map" navigation. The map user interface provides a clear overview of the entire computing environment and searching capability within the environment that may be accessed using the scroll wheel **132** and, optionally, one or

navigation buttons **166**, **168** that may be provided on the base **104** of the portable computer **100** (button **166**) and/or in the keyboard **106** (button **168**), illustrated in FIG. **17**. In one embodiment, the map mode of navigation is a hierarchical mode that reduces the number of items to select amongst at any stage of navigation, thereby facilitating user access with the scroll wheel **132** and, optionally, the navigation button(s) **166**, **168**. Of course, it is to be appreciated that the map user interface may also be navigated using conventional tools, such as a trackball, touchpad, mouse or arrow keys.

Referring to FIG. **11**, there is illustrated a block diagram of one example of an architecture of the portable computer including a map user interface. The user interface "home" screen **170** that displays a plurality of modes of content **172**. In the illustrated example, the home screen **170** contains five modes of content **172**; however, it is to be appreciated that the home screen may include more or fewer than five modes of content and that the modes of content may differ from the examples discussed below. According to one example, the modes of content **172** accessible via the home screen **170** may include "media" **172***a*, "connect" **172***b*, "web" **172***c*, "applications" **172***d*, and "channels" **172***e*. Using the map user interface, information, programs, features and applications may be grouped into the various modes of content **172**. By selecting any mode of content **172**, for example, by using the scroll wheel **132** and/or navigation buttons **166**, **168**, as discussed further below, the user may access the content organized within that mode.

For example, the media mode **172***a* may provide access to a medial player to play, view, search and organize media such as music, video, photos, etc. The connect mode **172***b* may provide access to features such as, for example, email, voice-over-IP, instant messaging, etc., and the web mode **172***c* may provide access to internet browsing and searching. The application mode **172***d* may provide access to, for example, computer applications or programs, such as word processor, spreadsheet, calculator, etc. In one example, these applications or programs may be provided as web-based services rather than programs or applications residing on the portable computer **100**. The channels mode **172***e* may provide access to different functionality of the portable computer, with the different functions or features defined as different channels. For example, a channel may include an alarm clock channel in which the portable computer is configured to display a clock and can be programmed to activate an alarm, e.g., a sound, piece of music, etc., at a predetermined time. Another example of a channel may include a "photo frame" channel in which the portable computer may be configured to display a pre-selected image or set of images, etc. Another example of a channel is a "television" channel, in which the portable computer is configured to stream Internet television. In one example, a user may configure particular Internet television channels (e.g., a news channel, a movie channel, a home and garden channel, etc.) into sub-channels within the channels mode of content **172**(*e*). Some or all of the modes of content **172** may access, retrieve and/or store information on the Internet **174**.

Typically streamlined devices are integrated with remote content storage and/or access, shown at **174**. The integration may be provided through third party service providers, in one example photo service FLICKR is integrated with various aspects of the device and/or the device's user interface to provide seamless access to photo content stored by the third party provider. The integration with remote storage services permits reduced storage capacity on the user device, for example, a portable computer. Other services may be integrated including for example GOOGLE DOCS, for word processing and other office related applications provided on-line. Reducing and/or eliminating the need for non volatile memory in the computer system is advantageous in that the device itself may be reduced in complexity and any associated cost. In some embodiments, a streamlined device doe not incorporate a hard disk drive for storage, providing for any local storage requirement through RAM and Flash memory.

According to one embodiment, the different modes of content **172** may be displayed as a series of bars across the display screen **110**, as illustrated in FIG. **12**. The following discussion of various features, including hardware navigation through the map user interface may refer primarily to the display configuration illustrated in FIG. **12**. However, it is to be appreciated that the invention is not so limited, and the modes of content may be displayed in other configurations, including, for example, a "desktop" and icon configuration, a "dashboard" type display, as illustrated in FIG. **13**, or another configuration, as would be recognized by those skilled in the art. Similarly, navigation is discussed below primarily with reference to the scroll wheel **132** and navigation buttons **166**, **168**; however, it is to be appreciation that navigation may also be accomplished using any of the conventional tools discussed above or known to those skilled in the art.

As discussed above, according to one embodiment, the scroll wheel **132** and, optionally, the navigation buttons **166**, **168** may be used to navigate the user interface. Referring again to FIG. **12**, scrolling the scroll wheel may sequentially highlight different ones of the modes of content **172**. In one example, the highlighting may be achieved by changing the color of the selected mode, and/or by providing a visual indicator, such as a colored bar **176**. A highlighted mode **172** may be selected by pressing the scroll wheel, thereby bringing up a new "page" or screen on the user interface corresponding to the selected mode. Once within a selected mode of content **172**, the scroll wheel may similarly be used to select particular functions, features or applications within that mode. In one embodiment, the default action for the scroll wheel **132** may vary depending on whether the portable computer **100** is in the laptop mode or the easel mode. For example, in easel mode, the default action for the scroll wheel may be channel selection within the channels mode **172**(*e*). In one embodiment, the scroll wheel **132** may be depressible as well as scrollable. Thus, pressing the scroll wheel **132**, as illustrated in FIG. **4**, may allow further control, such as, for example, selecting a channel onto which the user has scrolled, or "play" and "pause" of audio or video being played through the portable computer **100**.

As discussed above, according to one embodiment, one or more navigation buttons may be used in conjunction with the scroll wheel. In particular, in one embodiment, the navigation button(s) may be used to change the action of the scroll wheel. As discussed above, in one example, the default action of the scroll wheel is volume control. This action may be changed by pressing the navigation button **166**, as illustrated in FIG. **4**, for example, from volume control to menu navigation in the user interface, and vice versa.

According to one embodiment, the effect of pressing the navigation button **166** may vary depending on active the mode of content of the portable computer **100**. For example, if a user is in the media mode using a photo viewing application, pressing the navigation button **166** may change the action of the scroll wheel **132** from mode navigation to slideshow controls for the photos. When the navigation

button **166** is pressed, an control indicator box (similar to the volume indicator box **162** discussed above with reference to FIG. **14**) may appear containing different actions for the photo slideshow, such as "play," "next," "back," "skip," "full screen view," etc., and scrolling the scroll wheel **132** may allow a user to select one of these actions. Pressing the navigation button **166** again may return the scroll wheel action to menu navigation, to allow the user to, for example, move to a different feature or application within the active mode, or to select a different mode.

As can be seen in FIG. **4**, the navigation button **166** may be easily accessed when the portable computer **100** is in the easel mode, providing a convenient navigation tool for this configuration. A similar navigation button **168** may be provided on the keyboard **106**, as illustrated in FIG. **17**. In one example, the functionality of the two navigation buttons **166**, **168** may be the same, with the different locations providing easy, comfortable access in the different configuration modes (i.e., laptop or easel) of the portable computer **100**. Thus, a user may use either navigation button **166** or navigation button **168**, depending on personal preference. In another example, the two navigation buttons may have different functionality. For example, the navigation button **166** may be used to alter the action of the scroll wheel **132**, as discussed above, while the navigation button **168** is used to navigate "up" or "down" a level within the map user interface. For example, pressing the navigation button **168** while within a given mode of content may allow the user to "back up" to the home screen; or pressing the navigation button **168** while within a selected channel (in the channel mode of the content **172***e*) may allow the user to "back-up" to the channel mode main page.

It is to be appreciated that numerous variations on the functionality of the navigation buttons **166**, **168** is possible, as would be recognized by those skilled in the art, and the above examples are given for illustration only and are not intended to be limiting. In addition, any functions described with reference to one navigation button (**166** or **168**) to may be instead (or additionally) implemented with the other navigation button. In one example, the function of the navigation buttons **166**, **168** may vary depending on whether the portable computer **100** is configured into the laptop mode or the easel mode. For example, only the navigation button **166** may be active in the easel mode, and only the navigation button **168** may be active in the laptop mode. Alternatively, both navigation buttons **166**, **168** may be usable in either the laptop mode or the easel mode, but their functionality may vary. For example, when the portable computer **100** is in the easel mode, the default action for the navigation button **166** may be channel selection whereas the default action for the navigation button **168** is to access the "home" screen. Furthermore, the portable computer **100** is not limited to the use of two navigation buttons and may instead comprise only a single navigation button or more than two navigation buttons, any of which may be disposed in the locations described above (e.g., on the rounded portion **120** of the base **104** or on the keyboard **106**), or in other locations on the portable computer.

As discussed above, according to one embodiment, the function or display content and/or display orientation of the portable computer may vary when the portable computer is configured from the laptop mode into the easel mode, or vice versa. For example, as discussed above, when the portable computer **100** is configured into the easel mode, the visual display on the display screen **110** is automatically rotated 180 degrees such that the information appears "right-way-up," even through the display screen is upside-down compared to when the portable computer is in the laptop mode. In another example, for at least some activities within at least some modes of content (e.g., viewing a photograph or video), when the portable computer **100** is configured into the easel mode, the display may automatically adjust to "full screen view" (i.e., the displayed image or video is displayed on the full screen size, rather than in a window) to allow for comfortable viewing.

In addition, as discussed above, the ability to configure the portable computer **100** into either the laptop mode or the easel mode provides enhanced functionality. For example, when the portable computer **100** is not being actively used, the user may configure the portable computer into the easel mode, and program the portable computer to act as a digital photo frame, displaying one or more photos of the user's choice. In the easel mode, the portable computer **100** may occupy a smaller footprint on a surface than in the laptop or closed modes because the base **104** and display component **102** are upright, as illustrated in FIGS. **4** and **5**. In addition, because the portable computer can act as a passive information and/or entertainment device, such as a photo frame or clock, as discussed above, the portable computer may provide a useful function even when not being actively used by the user, and may do so (in the easel mode) without taking up much surface area.

It is to be appreciated that although the portable computer **100** is often referred to as being in either the laptop mode or easel mode, other modes or configurations are also possible. For example, as discussed above, because the portable computer **100** can be configured from the closed position, through the laptop mode into the easel mode by rotating the display component **102**, a number of configurations are possible in between "true" laptop mode and "true" easel mode. Each different configuration may invoke different functionality and provide a user with a different aspect of a graphical user interface.

In another example, the portable computer **100** may be configured into a "frame" mode, as illustrated in FIG. **26**, in which the portable computer is placed on a surface **212** with the keyboard **106** "face down" on the surface **212** and the display **110** facing upward. In the frame mode, the display component **102** may be at a similar orientation, and angle **134**, with respect to the base component **104** as in the easel mode. However, rather than the base component **104** and display component **102** being oriented vertically with respect to the surface **212**, as in the easel mode (in which the portable computer forms an inverted "V" as discussed above), in the frame mode, the base component **104** may lie flat on the surface **212**, as shown in FIG. **26**. In one example, software and/or hardware protection may be provided for the keyboard to prevent keys from being pressed (or to prevent the portable computer from responding to pressed keys) when the portable computer is in the frame mode.

Similarly, referring to FIG. **27**, there is illustrated another configuration of the portable computer **100**, referring to as the "flat" mode. In the flat mode, the display component **102** may be rotated (or opened) to approximately 180 degrees with respect to the base component **104**, such that the base component and display component lay flat on a surface, with the keyboard **106** and display screen **110** exposed, as shown in FIG. **27**. Unlike the easel and frame modes, in which the keyboard may be concealed and not easily accessible, in the flat mode, the keyboard is accessible and usable. In addition, as discussed above, the visual display on the display screen **110** may be automatically rotated to accommodate comfortable viewing of information by persons located in different positions relative to the base component **104** or display

component **102**. The visual display on the display screen **110** may also be manually adjusted by a user using, for example, the keyboard **106**, touch pad **108** or mouse (not shown), scroll wheel **132** or navigation buttons (not shown). For example, if a user (located at position A) wishes to display information for a person located opposite the user (at position B), the visual display may be rotated (automatically or manually) 180 degrees such that the information appears "right-way-up," to the person at location B, even through the display screen **110** is upside-down for that person. Similarly, in another example, the visual display may be rotated (automatically or manually) 90 degrees such that the information appears "right-way-up," for a person at location C. In one example, a user can "toggle" the visual display among various orientations. For example, a user at location A may have the visual display facing themselves while using the keyboard **106** or other controls to change or access information on the display, then toggle the display orientation 180 or 90 degrees to display the information for persons at locations B or C.

According to another aspect, system and interface streamlining may be employed with devices of multiple configurations. In some embodiments, multiple configurations include a traditional configuration, for example, a configuration similar to a laptop device, and also include new configurations, for example, an easel mode. Some examples of streamlined devices have the ability to change between traditional configurations and other configurations. The change between configurations may change the I/O profile of the device and hence impact the user's interaction with the device itself and any content displayed on the device. In one embodiment, the user interface is responsive to changes in configuration. In another embodiment, the user interface is responsive to changes in I/O profile.

According to another aspect, the streamlining of the user's multi-media experience incorporates the device the user uses to interact with multi-media sources, whether the sources are on-line or provided by the device itself. Streamlining of the device includes developing consistent user interfaces for the user to access all features presented. The device's graphical user interface layer is customized to the I/O interfaces provided. In one example a device is provided in the form of a portable computer configurable between a laptop mode (in which the portable computer has a conventional laptop appearance) and an easel mode in which the base of the computer and its display component stand upright forming an inverted "V," a closed mode, a laptop mode, an easel mode, a flat mode and a frame mode. According to one embodiment, each of the display modes may employ different I/O profiles.

Some of the aspects may be better understood through the use of examples demonstrating the interactions between a system, the system user, the interfaces provided, and the accessed content. The user experience is improved through simplification of the interactions with the user device—depending on the device's configuration the only activity required by the user may be to use a scroll wheel to identify selection and a button to execute the selection. Moreover, the user experience is enhanced by permitting the user to select the I/O profile s/he is most comfortable with and even select multiple I/O profiles or device configurations depending upon the context presented to the user. It is to be appreciated that adaptations to the user interface layer that maintain consistency while permitting different I/O profiles should be viewed as part of the invention.

The examples of user interactions are provided for the purposes of illustration and should not be viewed as limiting the invention to the interactions described, nor the specific presentations discussed, and it is to be appreciated that other interactions are appropriate and even desired in different circumstances. Additionally, different configurations of the device itself will provide for different user interactions, for example, based on additional hardware not available in another configuration.

Examples of User Experience

In one example, some typical user interactions with electronic content are illustrated. The user interactions occur in accordance with various aspects of the systems and methods for streamlining user interaction with electronic content. In some embodiments, the streamlined device is adapted to accommodate multiple users. In one embodiment, the user identifies him/herself to the device by entering a user name and password. Once the user name and password is accepted the user may begin interacting with the device, and if desired through the device to other content. According to another embodiment, the device may display a "users" screen, incorporating a visual representation for each user. In response to selection by the user of the visual representation the user is identified. Identification may optionally include a password challenge/response after selection of the visual representation. In some embodiments, a camera is available through the user device, and the user's visual representation may be generated by taking a snapshot of the user.

In one embodiment, that act of identifying includes access to remote storage associated with the device and/or the user. Remote storage is accessed to retrieve any global profiles that may exist for the user, and more specifically, any changes that may have been made to the user's global profile. In some embodiments, a local copy of any profile is stored on the device, and the remotely stored profile is used to identify any changes. Changes to profiles may be copied to the remote location or changes in the profile may be retrieved from the remote location. In one example, the local and remote profiles are associated with a revision date. The most recently revised profile may be used as the most up to date profile, with a different version receiving modification as necessary to correspond.

In one alternative, a remote profile may be maintained for the device itself. In another, the device profile may contain information on a number of users. In some embodiments, remote access is used to retrieve configurations and/or settings maintained for any of the device, the user, and groups of users, alone or in combination. According to one aspect, remote storage and/or remote access to user configuration comprises one element of an example system for streamlining user interaction with electronic content.

Once a user is identified (identification may occur by default if only one user has accessed a particular device) the graphical user interface presents a default view of the electronic content available on the device. In one embodiment, the view presented is responsive to the configuration of the device. According to some embodiments, device configurations may be determined using a sensor embedded in the device. In one example, a sensor is used to provide a signal and from the signal the device's orientation is determined. Alternative methodologies are employed in other embodiments for detecting and determining a device's configuration. In one alternative example, I/O devices may be enabled/disabled based on the physical configuration of the device. For example, during a transition from laptop mode to easel mode, various I/O devices that become inaccessible may be deactivated. Determining what I/O devices are still active and/or available permits identification of the device's configuration. In other embodiments, an accelerometer may

be used to detect a device configuration. In one example, a device may be a portable laptop computer. The portable laptop computer may have multiple configurations, including a laptop mode, an easel mode, a frame mode, a flat mode and a closed mode.

In the illustrated example, FIG. **1**, the user device is configured in a laptop mode, and has an I/O profile (a set of I/O devices) that one would normally associate with a laptop computer. In this example, the I/O profile includes, in some embodiments, a keyboard, a touch pad, buttons, web cam, and a scroll wheel. The graphical user interface is configured to present a default view that provides the user with contextual options. In this example the present context for the user includes "lean forward" viewing and the computer operations one would typically associate with user of a laptop. Other contexts arise based on configuration of the device (for example in Easel mode) and the computer tasks the user wishes to perform. For an indentified context a default is provided for the user eliminating the requirement of making configuration choices, however, the user is still permitted to accesses the configuration directly to customize it.

Shown in FIG. **2**, is an example of a page of the device's home view (**200**). The home view organizes user interface elements into a mapped based presentation and separates the presentation into logical units based on a single displayed screen, i.e. a page. One function provided by the home view is to serve as an organization of interface elements and/or navigation tools that maps visual representations of available content into a plurality of views of the available content. The home view is also configured to present summarized views of information to the user, so as to reduce the volume of information that a user needs to process in order to access content. In some embodiments, the mapped based interface is also configured to group like computer operations into a section of the map. Typically, grouped selectable computer content includes mappings to other groupings of lower level functionality. For example, high level navigation options are, typically, first presented to the user. The high level navigation options provide a summarized view of the available content, making content based selections easy to appreciate and accomplish. A user selects a high level navigation operation to navigate to more detailed operations. In some embodiments, the more detailed operations are grouped based on a mode of content. Modes of content may include for example, media, channel, connection, application, and web, among other options.

According to one embodiment, high level functions and low level functions are to segregated based on proximity to displays of sources of digital content. For example, a visual representation that maps to the source of digital content is included in a lower level of functionality than the view that organizes the presentation of the visual representation. A view that presents the digital content source itself, is grouped at a lower level than the visual representation that maps to the digital content source. In another embodiment, interfaces that provide navigation operations to digital content form a layer of the graphical user interface, and interfaces that provide interaction options to digital content form a lower layer. In one embodiment, the home view includes maximal display thresholds configured to improve the ability of the user to absorb the information presented. In some embodiments, a maximal number of visual representations per screen is set. In one example, the maximal number of visual representations is used to define a GUI page. In another example, the maximal number of visual representations is associated with a maximal number of full view visual representations, and the page is configured to include portions of views of other visual representations available on adjacent pages. A computer operation that would cause the computer device to exceed the maximal number results in the creation of a new display page. The home view is organized into as many pages are required in order to maintain the maximal threshold of display items.

Typically, the home view is configurable by the user. New items may be added, existing items may be moved and/or removed based on user selection. The home view further comprises some visual representations that can not be removed. Commonly requested system operations have visual representation displayed on the home view that can not be deleted. According to one embodiment, a user may reorganize the display but not remove system operations. For example, visual representations that map to system operations (e.g. communication configuration and hardware configuration) cannot be remove from the home view. Additionally, some system operations will always be displayed through the home view regardless of frequency of use. Positioning of visual representation is also organized and managed in the home view. Preferably, organization and/or management occurs automatically based on default settings selected for the user. Alternatively, organization and/or management may occur dynamically. For example, a user may make changes to organization and/or management settings on the fly. In another embodiment, default settings control organization and/or management, and an interface is provided to permits a user to makes any changes to the default settings. And in another embodiment, a user may be queried on preferences, the responses are used to establish defaults for operation.

In some embodiments, frequency of use of the visual representations is used to sort the presentation of visual representations on the home view. More frequently accessed visual representations are displayed at a higher position on a page and less frequently accessed representations are displayed at a lower position on the page, and may cause the computer device to display the visual representation on another page.

In a typically configuration, visual representations are organized based upon creation time, although certain visual representations take precedence in the display. According to one aspect, display precedence is established from left to right and from top to bottom. In one embodiment, the visual representation displayed in the upper left portion of the display screen is associated with the highest precedence. Precedence in the display may be influenced and even ignored with respect to certain system operations and the visual representations that map to them. For example, a visual representation mapping to display for a user's bookmarks may appear in the upper left corner. According to one embodiment, the positioning of the familiar option relating to bookmarks as the visual representation of the highest precedence provides users with an option familiar to traditional use of computer systems. Although presented as a streamlined interface element, the bookmark visual representation is configured to evoke familiarity in the typical computer user.

According to another embodiment, the visual representation that maps to the computer functionality for creating interacting with a new web page is the only representation that has a fixed position, relative to the display precedence. In one example, the element for triggering interaction with a new web page is always display in the bottom right corner. The other visual representation may be reshuffled based on frequency of use, and in other embodiments a user may also

reshuffle the visual representation by drag and drop procedures, however the element for triggering interaction with a new web page remains in the bottom right corner, and in one example, will move to a new page in response to a request to display an new web page element when the element is already displayed in the bottom right corner of a page. Drag and drop operations may be associated with a drag threshold. In one example, a drag threshold is applied to require a small movement of the identified card before the device executes the drag operation. The drag threshold may be measure on the order of pixels, and may be any number of pixels that prevent accidental dragging in response to the user attempting to click on a card. In one embodiment, the drag threshold is set to 5 pixels. Other thresholds may be used, 2, 3, 4, 6, . . . pixels as examples.

Other display precedence may be employed. For example, display precedence may be configured based on user location and language convention for the user location. The en English language is read from left to right and from top to bottom; however, other languages are not. According to some embodiments, display precedence and any corresponding animations are configured to correspond with the conventions of the local language, for example displaying from right to left.

Referring again to FIG. **2**, shown is an example of a page of the home view, with user interface elements organized to present the user with summary information of available content. Shown in FIG. **2**, at **202**, is a representation of picture and video content available to the user. At **204**, a visual representation of customized content is available. The customized content (discussed further herein) comprises rss items from a web location distributing via an rss feed. In example shown, **204**, comprises a channel card. The channel card is configured to allow easy interaction with a plurality of rss items, and further configured to be responsive to both lean forward interactions and lean backward modes of interaction. The other user interface elements include, for example, visual representations of web based content, specialized user interface elements for providing customized interaction with web based content in the form of channels, and system elements.

A typical activity for any user includes reading his/her email. The user may observe an e-mail from for example, the user's credit card company, Chase. The home view (**200**) is the default vehicle through which a user interacts with the device and with electronic content displayed on the device. The home view presents an organization of other interactive elements (**202-216**). Accessing e-mail occurs in response to selecting the visual representation (**208**) that maps to YAHOO! MAIL content. Upon selecting (**208**) the device executes a mapping from the visual representation to the content and in response the device presents a first view of the mapped content. According to one embodiment, in response to selection of a visual representation mapping to content of web page a web page view is displayed. The web page view is a zoomed in expression of the web based content mapped by the visual representation.

Once a user reaches the web page view (**300**) FIG. **3**A, the user may interact with the content shown. Although it is to be appreciated that other representations may mapped to different views, and different view may be used to map to further views. (**302**) shows an e-mail being reviewed by the user, and more specifically an e-mail from Chase Bank indicating that the user's credit card statement has issued. The body of the e-mail (**304**) includes a link (**306**) for accessing Chase's website. Selecting the link invokes an open new page view operation by default, and in response to selection of (**306**) the user sees an animation returning the user to the home view (**200**). The visual representation for "Browse the web" (**214**) reveals the creation of a new visual representation for accessing web content (**216**) by sliding away from a new visual representation the takes the former place of (**214**). The computer system displays an animation that shows the computer display zooming into the page view (**300**) of element (**214**), shown in FIG. **3**B. The user logs in and reviews his/her balance, shown in FIG. **3**C at (**350**). The web page view further comprises navigation element (**352**). The user selects (**352**) to return the home view (**200**), selects (**216**) to access a new web page and in response a new web content visual representation is created, further the device shows the display zooming into the new content.

FIG. **5** displays a quick access view (**500**). As the new card has not yet been mapped to content, the device displays content options in order to generate a mapping. In one example, the content options may be based on frequency of access. Shown at (**502**) are visual representations generated from the most frequently visited content. Selecting any of the visual representations in the body (**502**) causes the device to associate the mapping with the new card and zoom into the selected content display. At (**504**) provided as an element of the view's header (**506**) is a bookmarks control. Through (**504**) bookmarks control a user may access content not display in the frequency list (although a user may also enter a uniform resource identifier at (**508**).

In response to the selection of bookmarks a list of bookmarked content is displayed for selection, FIG. **6**, **600**. Upon selecting (**602**) a mapping to the bookmarked content is associated with the new visual representation. In one alternative, a user may enter a uri for a online source to associated with a new visual representation. The computer zooms into the selected content and in this example, displays the web page view for (**602**). Bank of America's (BOA) web site, shown in FIG. **7**A at (**700**). The user logs in at (**702**) and is able to pay the Chase bill just reviewed, shown at FIG. **7**B, (**700**). Having visual representations mapped to content available, improves the user's ability to transition between content views. By selecting the navigation element (**752**) the user is returned to the home view, FIG. **8**, (**800**), showing the visual representation (**802**) mapped to Chase's web page content and the newly created visual representation (**804**) mapped to Bank of America's web site content. Selecting (**802**) returns the user to the Chase content with the user's state preserved from the last visit, FIG. **3**C, (**350**). The user is able to immediately review the statement balance, and by selecting navigation element (**352**) return to the home view (**800**) select (**804**) and enter the amount due for the Chase credit card at (**754**).

It is to be appreciated that visual representations mapped to computer content facilitate transitions between content, and further by providing state preserving representations a user is able to quickly retrieve and employ information learned from content.

According to another aspect, the selection of a new visual representation is configured to employ a timer. According to some embodiments, the timer is configurable based on user selection, so that the animation may take longer, shorter, and in some embodiments the user is permitted to disable the animation entirely—in one example this is accomplished by setting the timer to allow 0 seconds for the animation, in another example the animation is simply disabled. In some embodiments, the timer is configurable by the system. Over the course of use, the allotted time may be reduced by the system automatically. Once a user has reached a certain time on the streamlined device, the animation may be automati-

cally disabled by the system. For some embodiments where the timer may be configured based on time of use, different timers may be employed for different user profiles. Thus an experienced user may no longer see the animation, whereas a novice user on the same device would see an extended version of the animation.

Graphical User Interface

Referring again to FIG. **11**, there is illustrated a block diagram of one example of an architecture of the portable computer including a map user interface. The user interface "home" screen **170** that displays a plurality of modes of content **172**. In the illustrated example, the home screen **170** contains five modes of content **172**; however, it is to be appreciated that the home screen may include more or fewer than five modes of content and that the modes of content may differ from the examples discussed. It should also be appreciated that different architectures may be invoked in response to different device modes. For example, a portable computer in laptop mode may display a home view as discussed with respect to FIG. **11**, when configured in Easel mode, user is presented with a Channel View. Shown with respect to FIG. **23** is an example of a portable computer set in Easel mode, displaying a channel view. The Channel view may also display a plurality of modes of content. In FIG. **23** shown are visual representations of content (**2304-2308**) with associated mappings.

According to another aspect, streamlining the presentation and integration of features and services includes simplifying the I/O devices that a user needs to operate in order to access features of the computer system and the features of any available service. According to another aspect, streamlining includes developing consistent visual representations of available content (whether on the computer system itself or from service providers). In another aspect, the organization of interactive elements and responsiveness of the organization to navigation options, device configurations, and user preferences improves the user's ability to interact with the computer system and its content. In one embodiment, system features and web features are consistently presented as cards for the user to interact with to achieve their computer objectives. In some embodiments, cards comprise part of an interface layer between a computer user and a user's computer based objective and/or computer operation. In some embodiments, the number and type of cards are presented in as few as three classes and/or types. Each card for example may be similar in aspect to the other, but each performing a different class of function on the computer system.

Referring to FIG. **9**, shown is a conceptual model **900** of an example graphical user interface. As shown, in FIG. **9**, through a streamlined device **901** a user will interact will a number of views of computer based content. In example model **900**, depending on the device's configuration a user will be presented a home view **912** or a channel card view **914**. Conceptually **910** forms a layer of the mapped based user interface, wherein the layer is configured to organize, manage and display streamlined views to the device's user. Layer **910** organizes, manages and displays objects of layer **920**. Layer **920**, according to some embodiments includes cards **921** which are selectable visual representations that are mapped either to computer functions or available computer content. Cards further comprise web cards **922**, that map to views of web content including web pages; channel cards **924** that map to customized views of content including web based content and picture and video content; nascent cards **926** that map to system functionality; system cards **928** that map to system functionality; and shared cards **929** that can be any of the former discussed cards shared from another user and/or streamlined device. The card layer **920** maps either to computer functionality executed upon selection or additional views to provide interactive displays to the device' user, for example, the views illustrated in layer **930**. Page view **932**, according to one example, is a zoomed in expression of a web page. At **940** shown is another layer which includes a screen saver view, **942**. In one embodiment, the screen saver view is a passive view. In one example, the screen saver view may be activated by the computer system remaining idle for a period of time. In one embodiment, the screen saver view displays content from channel cards designated by a user in an options menu. In another embodiment, the screen saver view displays content from a pictures and video card. In another embodiment, the screen saver view displays content from a shared card.

According to one embodiment, channel card view **914** comprises a view of the channel cards that are available to a user, and in another embodiment includes a channel selector (not shown). The channel selector is a selectable display configured to be responsive to manipulation of a scroll wheel. In one example, the channel selector is configured to display a rolodex of available channel cards and manipulation of a scroll wheel flips through the visual rolodex. Selection of one of the channel cards invokes any of a channel page view **934**, content menu, and a channel card full view, depending upon the device's configuration, and in some examples the result is responsive to where on the card a selection was made. Various cards, depending on the content mapped to, may also provide other views for rendering and providing for user interaction with content, for example, time, **939**, album, **936**, and lens, **938** views. It is to be appreciated that the conceptual model illustrated in FIG. **9** is only one example of a conceptual model of the graphical user interface for streamlining user interaction with electronic content. Other conceptual models may be employed, for example only some of the layers may be employed, additional layers may be used, and different segmentations of the layers may be to provided.

According to one embodiment, a method of presenting a streamlined graphical user interface for a streamlined device includes an example process **5000**, FIG. **50**. Process **5000** provides for organizing a plurality of views and GUI elements into a consistent presentation for user interaction. At **5002** provided is a first visual representation for displaying multiple content modes mapped to a view of computer content. At **5004**, a plurality of visual representations are organized by type of computer operation. At **5006**, the graphical user interface presents higher level operations to users as a view including a group of visual representations. AT **5008**, a user is permitted to select from the group of visual representations to navigate to lower level functions provided by different views of computer content. At optional step **5010**, a user may be permitted to select from within different groups of visual representations to navigate to further lower level views of computer content.

According to another aspect, layers of the conceptual model are configured to respond to device configurations by defaulting and/or transitioning to different views based on device configuration. Typically a device configured in a laptop mode displays a home view, **912**, to a user as the default view. In response to a transition in mode between laptop and easel the computer transitions the computer display from the home view, **912**, to the channel view, **914**, as the default. A user may elect to change the default view, for example by selecting a navigation button that executes a return to the home view. In one example, **168**, FIG. **17**, is

configured to return a user to a home view in response to selection of **168**, when the computer display is not on the home view. In the home view, a user may invoke a channel card view, **914**, by manipulating scroll wheel, **132**.

Home View Embodiments

Referring again to FIG. **2**, shown is an example page of a home view, **200**. Home views according to various embodiments are configured to render consistent organization of elements of the graphical user interface. Each page rendered in home view comprises a home navigation tool **250**, a header **252**, and a web search box **254**. For home views which include multiple pages, a hint or cut out of adjacent displays are rendered at **256**, for example. Hint or cut outs of adjacent displays may also occur at the bottom of the display screen, the top of the display screen, and both top and bottom, where multiple adjacent pages are present. **250**, home navigation tool is responsive to the context in which it is executed. For example, the home navigation tool, **250**, when selected causes the computer to display the last accessed view before the computer displayed the home view. Where a user navigates to the home view, **200**, from a web page view, the selection of the home navigation tool **250** caused the computer to display the previous web page view. In other examples, the home navigation tool permits, toggling between other views and the home view, as illustrated in FIG. **9**, at **932-939** and/or **914**.

According to some embodiments, the web page view includes a navigation tool, **350**, FIG. **3**C, and in response to selection, causes the computer to display the home view, **200**. Other elements included in the home view, for example, header **252** are configured to provide consistency in the home view across pages and in some embodiments across the user interface. Each page of the home view, **200**, further comprises a body, **258**, in which cards **202-216** are displayed. The body is associated with a maximal display threshold. The maximal display threshold governs the number of GUI elements displayed per home view page. In one embodiment, the displayed elements may comprise cards, and the maximal display threshold is set to display twelve cards. In addition to the maximal number of displayed elements, the home view may also comprise indicators of adjacent content at **256**. The device generates a new page display for the home view, **2000**, in response to exceeding the maximal display threshold.

Home view **200** is the default view in laptop mode, and may be implemented as the default view in other device modes (e.g. frame, easel, flat modes). According to some embodiments, the home view is the primary mechanism for permitting users to access cards and navigation through content viewed on the device. In the home view a user can access open web sessions, view and manage their channels, initiate new web sessions, and launch other activities.

Cards, e.g. **202-216**, form comprises a plurality of types. Some card types are organized by function, some by content. The home view is comprised of various cards, each card providing access to computer based content. According to one aspect, cards can be thought of as the building blocks of the user interface, providing access to a plurality of views and/or content. Indeed, cards as elements of the GUI, are configured to be shared across users and across other streamlined devices. The ability to employ the features and functions of card based elements may be limited to streamlined devices, although cards to and settings may be shared with traditional devices.

Shown in home view **200**, are web cards **206**, **208**, and **216**, channel cards **204**, and **210**, further shown in home view **200** are special system cards that map to content and system operations, for example bookmark card **212**. The bookmark card **212** is configured to provide traditional computer operations associated with conventional systems and browsing methods. The bookmark card serves as learning tool, to provide features with which user are familiar in a new format that encourages further integration of card based interactions. According to one aspect, card interfaces are generated by a user for each web based interaction, eliminating the need for convention navigation in the form of bookmarks. Another example of a system card appears at **214**. **214** maps to functionality that when selected causes the computer system to execute a web card generation process. FIG.**10** illustrates an example generation process, **1000**. Example processes, **1000**, begins at **1002**, in response to selection of a card or embedded web link (e.g. **214** of FIG. **2**) that is associated with a mapping to functionality that generates a new web card. For example process **1000**, may be initiated from a page view of a web card in response to selection of link. According to one embodiment, the behavior of the streamlined device depends on instruction embedded within a selected link. In particular, the device in response to selection of a navigation link navigates to the identified location in the same page view. If the link encodes an instruction for open in new window and/or open in new tab, the device in response to selection generates a new card and displays the page view of the new card. Alternatively, defaults may be established for link handling, including a default for selection of a link contained inside an e-mail, which may default to a "new card" mapping, whereas in some embodiments, links directed to the same domain as the current view default to navigation functionality within the same window. In other words, in response to a selection of a link within a certain web-page, directing navigation to another location with in the same web page, the default functionality executed, caused the device to navigate to the selected location within the same window.

According to another embodiment, handling of web links may also be governed entirely by the settings contained in the selected link. For example, the device may execute process **1000** in response to execution of a link including the instruction to open in new window. The device may also execute process **1000** in response to execution of a link including an instruction to open in a new tab. In one embodiment, links without such references are processed by the web page view navigating to the linked location without invoking process **1000**, for example.

At **1002**, the mapping is executed and the computer device determines its state at **1004**. The state determination is configured to identify a current view setting for the device. Current view setting may be limited to an indication that the device is current showing the home view. At **1006**Yes, the device is currently showing the home view, and the device executes a card generation animation, at **1008**. In one example, the animation causes the device to display a browse the web card **214**, FIG. **2**, sliding away from a new visual representation the takes the former place of **214**. One the new card image is shown the computer display renders an animation the causes the user to perceive zooming into the newly created card at **1010**. Alternatively, it is determined that the device's current display is not the home view at **1006**NO. At **1012**, apparent motion relative to the user is rendered by the device to provide the appearing of zooming to the home display. Other animations may be employed to establish for the user the perception of motion to the home view. Once at the home view, process **1000**, proceeds as before.

According to one embodiment, the home view, FIG. **2**. **200**, is configured to manage and organize cards. The home view provides a simple and convenient mode of navigating through the features and content accessible through the device by organizing and managing cards.

Card Examples

According to some embodiments of systems and methods for streamlining user interaction with electronic content, visual representation that render computer operation and/or content in a consistent manner further comprise cards. According to one embodiment, cards may further comprise types, including web cards, which map to active web pages. In some embodiments, device configuration sensitive displays are provided through a graphical user interface. In some embodiments the device configuration sensitive displays include cards. Cards may come in a number of forms. In some embodiments cards may be classified according to the functionality that they provide to a particular user. For example, system cards provide and display computer system functionality that maybe frequently accessed during ordinary computer user and/or may be required for computer use. In some embodiments, web cards provide a user interface for web based content and/or web based activity. In some embodiments, channel cards provide additional features that enable a user to better interact with web based content, and in another example, channel cards provide interactive views by utilizing different content presentations provided by a web source. Consistent user interfaces provide an access layer to system and web based content. Consistent user interfaces are used to access web based content, and even content and applications provided by third parties.

In one example, a web card presents a thumbnail view of the current state of the web page. In another example, the web page card presents a cut out view of the web page based on computer focus within the page at the time the web page view was exited. FIG. **14** illustrates, according to one embodiment, the behavior and rendered display of certain cards responsive to computer focus and selection by a user. A card may be in a number of states based on computer focus. One example of computer focus would include "hover" **1404**—hover indicates the movement of a pointer, typically represented by a white arrow on the computer system display, over a card. A card may be in a normal state **1402** when not in focus.

Focus is intended to include any identification by the computer system of the card, short of execution of the mapping associated with it. For example, focus should include identification by tabbing through available cards, identification by using hotkeys, among other options that result in computer focus resolving on the card. The terms computer focus and focus should be read to include hovering over a screen element, tool, or other visual representation displayed on a computer system display. In one example, focus follows a displayed pointer, and movement of the pointer with, for example, a mouse causes the computer system to resolve computer focus on the visual object under the pointer display. Selection by a user or a computer system may include focus and visual objects displayed on a computer system display may be selected by moving a displayed pointer. In some embodiments, selection may be accomplished by clicking on a visual object using a pointer displayed on the computer screen. A second "click" may then cause the computer system to execute functionality associated with the visual object. Execution should be read to include initiating an operation associated with a visual object, in one example execution will include clicking on a visual object (single or multiple "clicks"), by positioning a pointer display over the visual object and depressing a button to initiate the operation.

Focus may be resolved on a computer system by analyzing content intended to be displayed before its display on the computer system, additionally focus may be responsive to actions taken on the display through for example pointing devices.

According to one embodiment, when a web card or channel card appears is in a hover state **1404**, additional options are display in the card header, for example at **1450**. The additional tools displayed in the card header permit a user to select the options associated with the card. The options view for a card **1406**, displays available selections contained in the options. For a web card **1410**, the options include make a channel **1452**. The selection of make a channel at **1452** causes the device to execute functionality that transforms the web card into a channel card. The transformation from web card to channel card includes transforming the display image of the card element on any corresponding view.

Typically the transformation may only be made for a web card that references a content including a rss feed. The items in the rss feed are configured into a customized presentation—as for example a channel card **1412** (discussed further herein). For a channel card **1412**, additional options are include show in screens aver, for example. Other states may impact the display of web card including a drag and drop state. Upon focus, the additional tools will resolve in the header section of the card, the additional tools may be displayed as icons, as shown in FIG. **14**, and may also be rendered as selectable text options include "bookmark," "share," "options," and "close." If a user depresses the button control and does not release, the user may user drag and drop the card within the home view. The card may be dragged across pages of the home view, and the user may reorder the presentation of cards in the home view using multiple drag and drop operations. According to one embodiment, as a card is dragged across the home view, all displaced cards will appear to move into new places.

According to another aspect, computer content and interactive functionality is recast into cards. In one embodiment, the card comprises a visual representation of web content that simplify the user's interaction with even the most sophistication on-line tools. Cards are configured to present a summarized view of available content and/or present a visual indication of available functions. According to one embodiment, cards form a part of the structure of the graphical user interface between the system and the user. In various embodiments, cards are configured to be context and/or content sensitive. Some cards are configured to be persistent. Persistent card may be removed by an affirmative act of the user

With cards, content can be easily and visually absorbed by a user. In some embodiments, cards serve to maintain a current state of the user's activity. And in some embodiments, cards also serve to focus the displayed content on contextual information. Cards may be configurable by the users. Configurations options are presented to the user consistently. In some examples, this includes displaying consistent animations designed to draw the user's focus to the particular activity and to provide comfort level for the activity being displayed.

Shown in FIG. **43** is an example process **4300** for streamlining user interactions with computer content. The process includes presenting a consistent look and feel for user access to computer operations and computer content for user interface elements that also provide for a reduction in decision

making requirements imposed on a user during conventional computer use. At **4302**, a user is presented with a first visual representation in a computer display, the visual representation is responsive to computer focus and at **4304**, and the user is permitted to resolve computer focus by selecting the visual representation. Selection and focus can be thought of in terms of a visual pointer display on the computer system display, by moving the pointer over an object displayed on the computer display, computer focus may be resolved on the visual object. Alternatively, a user may have to indicate a selection of the object by clicking on a mouse button for example.

According to one embodiment clicking is not required. In another embodiment, the pointer being displayed above a visual object activates a "hover" state. In response to hovering, computer focus is resolved on the visual object. At **4306**, a focus visual representation is displayed to the user. According to one embodiment, the visual representation and the focus representation are configured to have common elements, and in particular, a header and body display for rendering computer content associated with the visual representations. The focus visual representation including a header and body display summarizing at least one of computer content and computer operations are shown at **4308**. The visual representations present a multitude of computer content in a streamlined form, in other words, the visual representation forms an indirection layer of functionality that provides a window into digital content, and/or computer operations linked to the visual representation. In particular, a visual representation mapped to a web page for example, provides a view of the web page in the body of the visual representation and provides additional information about the web page in the header display. The header display may also include tools for providing easy access to computer functionality associated with the web page and/or its content. In one example the header display only display the tools in the focus visual representation so the initial view of the content is not cluttered with tools that are not needed. Further, in one embodiment, the tools only display in response to focus, in other words, only when a user indicates they are necessary by moving a display pointer over the visual representation. Further computer logic may be embodied in process **4300**, responsive to a display position of a pointer displayed on the computer screen. In response to the display position of the pointer occupying the same location as another visual object, computer focus is resolved on that object, causing the computer system to determine functionality associated with the object.

In one example, the object is a visual representation, and in response to moving the pointer over the visual representation, the computer is caused to display a focus visual representation associated with the visual representation. In one example, computer focus remains with the focus representation and functionality associated with the focus representation is made available for execution. Other operations including display of a header responsive to focus may be executed. At **4310**, a mapping associated with at least one of the focus visual representation and the visual representation is executed causing the computer system to navigate to a content view. The content view may include a display of computer operations. In one alternative, the content view provides an interactive view of computer content. In one example the computer content, comprises online content viewed through a web browser. In another example, the content view is presented in a similar format as the visual representation used to navigate to the content. In one particular example, the content view includes a header display and a body display, and the content is displayed in the body portion. The header portion provides additional information on the content, for example a title, and may further provide additional tools that are responsive to focus. Again providing tools that resolve when needed and disappear when not reduces the amount of information a computer user need to assimilate in order to use a computer system.

All computer content and operations can be configured to display in visual representations and respective focus visual representations, providing a user with a streamlined presentation of computer content and operations. According to another example, different content types are presented through visual representation of a similar format. In one embodiment, the visual representations comprise cards as discussed herein.

A process **4400** may be invoked by streamlined computer system as part of process **4300**. Additionally, process **4400** may operate independently or be called from other processes. Shown in FIG. **44** is a process **4400**, for permitting a user to interact with computer content. At **4402**, a computer system displays a first content view. The first content view is configured to display in a similar format as a visual representation selected by the user to navigate to the content view. In one embodiment, the first content view includes a header and body display. In another embodiment the content view is a zoomed in view of the visual representation used to navigate to the content view. At **4404**, an enlarged view of the first visual representation is displayed. In one example, the content view comprises a web browser view of a web page displayed in the body of the content view. The visual representation used to navigate to the content view displays a portion of the web browser in the body of the visual representation. At **4406**, a user is permitted to interact with the content displayed in the body of the content view. The user is further permitting to access options associated with the content through the header display. Optionally, further computer logic may be included in process **4400** for presenting focus and unfocused views of the header in the content view.

According to another aspect, cards types should be clearly defined by color scheme and appearance, while at the same time maintaining a similar format. For example the similar format should include header placement and sizing, display of tools, title and frame size. In one embodiment, a color scheme configured to differentiate card types provides for web cards with white headers with the content displayed on the web card showing as a thumbnail of the current state of the page. Channel cards are configured with black headers, and the content presented in the channel card comprises a simplified representation of web content based on RSS feeds or custom visualizations of some non-RSS websites. Customized visualizations may be pre-loaded on the device for specific websites, or may be provided as part of a remotely stored device profile and/or global profile. Updates to the device profile and/or a global profile would include development of customized visualizations of non-RSS websites, and access to remote storage trigger delivery of the customized visualizations. According to one embodiment, only sites for which RSS or custom visualizations are available can be displayed as channel cards.

System cards are shown either with blue headers or grey headers. System cards may be further classified to include nascent cards. "Browse the Web" card, FIG. **2**, **214** is an example of a nascent card. The nascent card may be configured so it position is not configurable, nor is a user able to remove the card from the home view, or any view. The nascent card maps to functionality necessary to operation of

the streamlined device, and thus no option to close and/or remove it is available. Other system cards are configured to represent activities that have been specifically designed such as for example, photos & video card(s). The other system cards map to functionality also regarded as necessary so that the other system cards can not be deleted, however, the other system cards can be reorganized in for example the home view. Functionality mapped to by the other system cards include communications card, for configuring wireless access of the device, bookmarks for presenting conventional styled web page bookmarks, camera for providing for configuration and operation of a camera, either embedded in the device upon construction, or incorporated through for example a USB port.

In one embodiment, a system card is mapped to functionality to provide a user with streamlined access to web bookmarks. In one example, a bookmark card is provided that is always accessible from the home view. As with other system cards, the bookmark card comprises a header and a body. According to one embodiment, the body display for the bookmark card is unique to the bookmark card. Bookmarks are retrieved and displayed in the bookmark card one at a time. In one example, the bookmark card indicates in the body display the number of the bookmark in the list and the total number of bookmarks available.

According to some embodiments, the interactivity of individual cards is limited to navigation to a page view. For example, a user can not change the content of a card by interacting only with the card. In other embodiments, channel cards, for example, provide a user with the option of interacting directly with the card. Upon hover, channel cards presenting news feeds may resolve navigation tools configured to step through individual rss items displayed in the channel card. Additionally, selection within a channel card presenting a news feed causes the device to execute different mappings depending on what part of the channel card was selected for execution. Clicking directly on an rss feed headline for example, caused the device to execute a mapping to the web page view for that article. Selecting the body of the channel card causes the device to execute a mapping to the channel full view. Selection within the channel full view causes the device to display a content menu, responsive to manipulation of a scroll wheel.

In an embodiment employing a three card presentation, the cards that are presented provide the user with the ability to interact with system specific features. System features may be invoked and display using consistent presentation and/or animation. Consistent presentation of like features may engender a comfort level in the user for new features that appear using the same and/or similar presentation. Additionally, where a user invokes features in a similar or consistent manner, access of new features is facilitated and user comfort level may be increased. For example, a nascent card, is a system card that provides for consistent implementation of user activity and/or a computer objective desired by the user. In one embodiment, the "new card" card is a visual representation of a system placeholder for generation and presentation of new card that a user may created during the course of ordinary activity. By selecting the new card (for example, creating a web card used to interact with web content) a consistent animation may be employed to display to the user the creation of the new web card utilizing the nascent "new card" card. Other system features may be presented through system cards. Typically, system cards will represent functionality used most frequently and/or functionality that should always be available and not subject to removal by a user. Other card types, include web cards that are used to present web content, and channel cards that are used to provide to a user easy and/or consistent access to additional features.

According to another aspect, features of cards may include consistent navigation tools, consistent content display—including limiting the ability to alter content of a card through user interaction with the card, state representative images of content, state and context representative images of content, customized visualization of content, and in some examples customized visualizations include information derived from rss content. In one embodiment, user interactions with cards are also streamlined. In another embodiment, when card configurations and/or card options are selected by a user (if available) a consistent animation is presented to the user. For example, selection of a card's options may cause an animation displaying the flipping of the card and the revelation of user selectable options. Options, for example, may include permitting the content reflected in the card to be displayed as a screen saver. Certain features may only be available for certain cards types. In one embodiment for example only channel cards (discussed in greater detail herein) may be displayed in the screensaver mode, thus only channel cards will display the option to permit display in screensaver. In another embodiment, certain card types may be converted through user selection. In one embodiment, web cards may be converted into channel cards. It is realized that the segregation of functions between the card types may improve user interaction and adoption of the different feature sets available to each.

According to another embodiment, systems and methods for streamlining user interaction with electronic content may include a process for generating new visual representations mapped to computer content. Shown in FIG. **47**A is an example process **4700**, for generating a user interface element. At **4702**, a visual representation associated with a computer operation for creating a new visual representation is displayed on a computer system display. The visual representation may comprise a nascent card. Nascent cards are configured to always be available to a user, that is, they are configured so a user can not remove them. In some embodiments, the position of the display of nascent cards cannot be changed by the user. In one embodiment, the nascent card is always displayed in a home view, at the bottom right corner of a home view page. For a new page this may include the nascent card appearing in the upper left corner of the page, when no other cards are displayed on the same page. At **4704**, execution of the functionality associated with the visual representation occurs. At **4706**, a first animation is displayed to the computer system user showing the visual representation sliding away from its present location to reveal a new visual representation. At **4708**, a second animation is displayed to a user showing the computer system zoom into the new visual representation to present a quick access view at **4710**.

The quick access view is configured to permit a user to select computer content to associate with the new visual representation. In one example, this includes presenting a display of frequently accessed web content (e.g. web pages) to the user in the quick access display. It is likely that the user will intend to return to a page frequently accessed, in which case, the display will meet the users needs, however, the quick access view is further configured to permit entry of a uniform resource indicator (e.g. a url), and further configured to allow a user to request display of bookmarked locations. At **4712**, a user is permitted to select computer content to associate with the new visual representation, and in response to selection of the computer content, the com-

puter system displays an animation to the user depicting the computer system zooming into a first view of the selected content at **4714**.

In one alternative, new visual representation may be generated without selecting a nascent card, in process **4750**, FIG. **47**B. For example, a web card may include a hyperlink directing a computer system to display the linked web page in a new window. At **4752**, a user selects an open in new window link. In one alternative, the link may include instruction to open an new tab. In response to a request to display a web page in a new window, a new visual representation is generated and associated with a mapping to the web page. The computer system displays a transition from the current web card view to the home view, **4754**, displaying the nascent card. In an optional step, the process zooms out the home view so that the nascent card is rendered on one page. The system presents an animation to the user, **4756**, similar to step **4706**, showing the nascent card sliding away from its position, revealing a new visual representation. The system then zooms in on the new representation, **4758**, displaying a first view of the mapped content, **4760**.

Common Card Configurations

According to one aspect, cards should have common features to promote user acceptance and improve adoption of different cards, while providing familiar a form. According to some embodiments, most cards are configured with a similar anatomy. According to some embodiments, cards comprise certain common elements described with reference to illustrated examples.

With reference to FIG. **15**A shown is an example of a web card when not in focus, however, the common features among the cards are discussed in greater detail. Header **1502** run along the top of the card. The color depends on the color scheme employed to differentiation the type of card: in one example white is used for web cards, black for channel cards, and blue and grey for system cards. Optionally the header includes a favicon **1504** (the favicon may be retrieved from the site being view in the case of web and channel cards and a custom favicon is employed for system cards). The header further comprises a title **1506** for the site or activity conducted, and a body **1508**. In response to focus on a card the display of the card becomes a little larger relative to its display when out of focus and the card controls **1552-1556**, FIG. **15**B, are revealed on the header, when in a focused state.

Card options **1552**, reveals the card options, and may in some embodiments invoke an animation of the card flipping to reveal selectable options. Share, **1554**, is configured to permit a user to share the card with other user. Delete, **1556**, removes the card from the home view. Card controls, such as **1552-1556** are typically not available for system cards, which typically can not be shared or deleted. According to one embodiment, the photos & video system card is configured to display the card options (in one example the photo & video system card permits selection of "Show in screensaver"). **1508**, FIG. **15**A, card body varies by the type of card displayed. In one embodiment, a web card body **1508** comprises a thumbnail of the current state of the web page. The current state thumbnail may be updated. Updates may occur in conjunction with a timer. Typically the timer is set for default operation, and is not configurable by a user, although in some embodiments a user may access and modify an update interval for web cards through system configurations.

The body of a channel card (not shown) comprises a visualization of the rss feed from the web site source. Sites that do not have rss feeds, typically, will not be able to be displayed as channel cards. However, customized visualizations for some static sites are preloaded and for the preloaded static sites an rss feed is not used to display the web site content in a channel card. System card body (not shown) comprises a custom image configured to represent the system activity mapped to by the system card.

Options and Information Associated with Various Card Embodiments

According to one embodiment, selection of the card options icon causes the device to display a visualization of the card turning over. The "back side" of the card, FIG. **16** (showing a plurality of examples of the backs of various card types) comprises the following options: Show as channel **1602**, which transforms a web card into a channel card, and vice-versa, based either upon checking or unchecking box **1604**. If the channel is a photo and video channel, this control reads "Show as channel using [lens]." A lens is a customized visualization for computer content. Shown in FIG. **16** is an example lens "Slideshow" at **1606**.

According to another embodiment, the option for show as channel is either shown to as permanently checked for system cards that are always available as a channel (e.g. the photos and video card), or as absent for system cards that are not available as a channel (e.g. a system settings card or communications card). Show in screensaver, **1608**, is an available option for channel cards. Typically **1608** is not an available option for other card types, however, the photo and video system card does permit its content to be displayed in the screensaver. According to one example, new channel cards are configured to not display in screensaver mode by default and this option is not checked for new channel cards. Shared from, **1610**, provides information on the user or device from which the card was shared. According to one embodiment, system cards cannot be shared, and do not display "shared from" information. Additionally, shared from **1610**, does not display for card generated by a present user. In one example, shared from **1610** is responsive to computer focus (e.g. hover). Hovering over the Shared From line, **1610**, causes the device to display an informational bubble with a list of people to whom the card was shared. Other options may be employed for displaying shared from information. Other options may include linking to a display list for share from information, and in some embodiments may include displaying the shared entities on the back of the card without selecting **1610**, Shared From. In such embodiments a maximum number of shared entities may be displayed before requiring selection of a more control. The more control expands on the list of shared entities to provide for listings that do not fit within the space provided on the back of a card.

Shared to, **1612**, provides information about whether and to whom the card has been shared. According to one embodiment, system cards can not be shared, thus no shared to information is displayed. By default shared to, **1612**, does not display until a card has been shared. According to some embodiments, the "shared to" field is responsive to focus. In one example, hovering over the shared to line causes the device to display an informational bubble with the list of people to whom the card has been shared. Other options may be employed for displaying shared to information. Other options may include linking to a display list for share to information, and in some embodiments may include displaying the shared entities on the back of the card without selecting **1612**, shared to. In such embodiments a maximum number of shared entities may be displayed before requiring selection of a more control (not shown). The more control expands on the list of shared entities to provide for listings

that do not fit within the space provided on the back of a card. Optionally the more control may cause the device to display an information bubble containing the remaining shared entities and/or all the shared entities.

Organization of the Home View

Typically, the home view is configurable by the user. New items may be added, existing items may be moved and/or removed based on user selection. The home view further comprises some visual representations that can not be removed. Commonly requested system operations have visual representation displayed on the home view that can not be deleted. According to one embodiment, a user may reorganize the display but not remove representations for system operations. For example, visual representations that map to system operations (e.g. a communication card and a camera card) cannot be remove from the home view. Nascent cards, for example, the Browse the web card, can not be removed from the home view. According to some embodiments, the Browse the web card is further limited in configurability, in that, the positioning of the card will not change relative to the other cards. For example, the Browse the web card will always be displayed last. In other examples, nascent cards may have other positions that do not change, first to be displayed, last displayed on first page of the home view, etc. In some embodiments, even nascent cards may be reorganized in the home view display.

The user interface may include default settings for organization. For example, a default organization for the home view comprises an arrangement roughly based on order of creation, from left to right, top to bottom. Other organization may be employed right to left, top to bottom. In one example, the user of the streamline device is located in China, and the default organization is presented from right to left.

One example default setting for the home view establishes a number of cards to display per page of the home view. In one example the default caused the computer to render twelve cards on a page. In another example, the display of the twelve cards further comprises the tops of the cards on the next page or the bottoms of the cards on the previous page, as appropriate. In one embodiment, the home view includes maximal display thresholds configured to improve the ability of the user to absorb the information presented. In some embodiments, a maximal number of visual representations per screen is set. In one example, the maximal number of visual representations is used to define a GUI page. In another example, the maximal number of visual representations is associated with a maximal number of full view visual representations, and the page is configured to include portions of views of other visual representations available on adjacent pages. A computer operation that would cause the computer device to exceed the maximal number results in the creation of a new display page. The home view is organized into as many pages are required in order to maintain the maximal threshold of display items.

It is to be appreciated the different organization options may be employed for the home view. In one alternative, frequency of use may be employed to organize the cards displayed in a home view. The most frequently accessed content may be display first with the least frequently accessed content being display last. Another option includes the use of last accessed information associated with a particular card. The most recently accessed card may be displayed first and the card with oldest use would be displayed last.

Creating New Cards

An example process **1040**, FIG. **10**B may be executed to generate a new card. Process **1040** is executed in response to a user clicking the Browse the Web card on the home view at step **1042**. In response to the execution of the Browse the Web card, the devices displays the card sliding to the right (or down to the far left on the next row if it is already on the far right) as a new web card is created in its place at **1044**. At **1046** the system renders apparent motion in the display, showing the system zooming into the new web card. At **1048**, the system displays a quick access view configured to generate a mapping between the new card and web based content. According to some embodiments, newly added cards (whether created by the user or received as a shared card from another user) always appear at the bottom of the home view next to the Browse the Web card. In other embodiments, the Browser the Web card may display a different title, for example, "New Card." It is to be appreciated that the title is not particularly relevant to the nascent card, but rather, the functionality for generating new card is.

New cards may also be created on the fly during a browsing session as part of process **1080**, FIG. **10**C. Process **1080** begins at **1082** in response to either a user clicking an "open in new window" link on a web page, or in response to a user executing a keyboard shortcut (e.g. Shift-click) to perform the same function. Additionally links that contain computer instructions to open link in new tab will invoke the same functionality at **1082**. In these cases, the system shows an animation zooming out of the current card to the home view at **1084**, optional step **1086** cause the system to display movement to the last page of the home view (if not there already), at **1088** the Browse the Web card slides out of the way, revealing the new card in its place at **1090**, and finally zooming into the new card, **1092**. Process **1080**, may be implement in association with a timer to govern the overall execution time of process **1080**. In one example, the process and animations should take no more than about half a second.

According to one embodiment, selection of the Browse the Web system card causes the system to execute a process for generating a new web card. As part of the process for generating a new card, the system presents a quick access view to the user. Referring again to FIG. **5**, shown is an example of a quick access view. As discussed earlier, the body **502** of the quick access view may display a frequently accessed list of content. A user may select from the displayed content to generate a mapping for the new cards, and enter the web page view for that content. Additional at **510**, the quick access view presents news from, for example, the device manufacturer. At **510**, news regarding operation of a streamlined device may be shared with the streamlined device user community. Advice on new features may be provided, **512**. And awareness drawn to new features. Hints and suggestions may also be displayed, for example, **514**, referring users to GOOGLE DOCS, and on-line word processing/office suite solution.

According to another embodiment, creation of a channel card is available for sites with rss feeds or sites for which customized visualizations are available. From the home view any web card with rss feeds or with customized visualizations can be used to generate a channel card. From a web page view, hovering over the option add channel caused the system to display a preview of the channel card. In one embodiment a channel card includes features not observed in web or system card. For example, channel card **204**, includes a display, **280**, for an individual rss item received from the online source. In this case the rss item is a headline that permits direct access to an article (typically through a web card). Channel card, **204**, will display a plurality of rss items one at a time through the channel card, thus the content in a channel card periodically changes, until al content items have been displayed. At that time the

channel cards starts again from the beginning displaying each one of the plurality of source items.

Removing Cards

According to one embodiment, the home view may be configured by a user. A user may remove visual representations from the home view. In a card example, a user may access card option by providing focus on the card. As discussed above, card options are revealed in response to focus. Options may comprise a delete option. In one example, a delete option is display as an "X" in the upper right corner of a hover view of a card. To delete a card from the home view, a user executes the delete option by clicking on the "X." In response to removal of a card from the home the view, the remaining cards on the home view are reordered by the device. In one example, the reordering comprises shifting of the displayed cards to rearrange them into the organizational schemes discussed above. In order to ensure a close/delete selection was intended and to provide the user with the ability to change their mind, an information display bubble may be generated in response to the delete execution. The information display bubble maps to functionality that causes the device to undo the delete operation in response to selection by the user.

According to one embodiment, a dialog bubble is displayed off of the header of the home view. The dialogue bubble displays a message confirming the delete operation and further comprising a mapping to functionality provided, the causes the device to undo the delete operation in response to selection. According to another embodiment, hot-key functionality is provided that cause the device to undo that last activity performed by the device. In one example, ctrl-z, is mapped to functionality that permits the last activity to be undone.

Home View Navigation

According to one embodiment, the home view in configured to display a maximum number of visual representations. For embodiments employing cards that map to computer content and/or operations the maximal number of visual representations will restrict the number of cards displayed per page of the home view. In one example the display number is set to twelve. In response to exceed the display number, the device executes operations designed to render a new page for the excess. In response to multiple pages, the device is configured to display indications of content (e.g. cards) on adjacent pages. In response to movement of a pointer, visual representation displayed on the screen tracking computer focus, new pages may be displayed. In one example, multiple pages are provided by the view. The display rendered by the device give a user the impression that adjacent pages appear above and below the current page view. For example, indications of adjacent card content appear at the top and bottom of the home view body. By scrolling to the pointer towards the bottom of the screen the user causes the device to display the next page of the home view, further by scrolling the pointer towards the top of the screen the user causes the device to display the previous page of the home view. Additionally, according to one embodiment, arrow keys provided on the device's keyboard may be used to navigate pages of the home view. In one alternative, keyboard shortcuts mapped to navigation functionality. In one example, keys with mapped navigation functionality include shift-arrow, crtl-arrow, alt-arrow to provide further navigation options.

One may navigate away from the home view at any time by selecting a visual representation and causing the device to execute the mapping associated with the representation. In one embodiment, a user selects a card and in response the device renders a page view appropriate for the selected card (e.g. web page view for a web card). In one embodiment, an integrated scroll wheel provides navigation functionality from the home view. Scroll wheel functionality may be dependent on state of the device, and may also be dependent on configuration of the device. In one example, the device's present state is its home view and manipulation of the scroll wheel causes the device to display the channel card view. According to one embodiment, returning to the home view is streamlined for the user. This may be accomplished through navigation buttons on the keyboard, for example **168**, FIG. **17**. The navigation button operates as a toggle between present view and home view, returning a user to the home view when the present view is elsewhere, and returning the user to the previous view when the present view is the home view. A navigation element provided in visual representation of computer content may also provide the same functionality. For example, navigation button **250**, in home view **200**. In another example, a navigation button, **352**, FIG. **3**C is provided in a web page view.

Reorganization of visual elements in the home view may implicate navigation with the home view. In one example where the home view presents cards to a user through multiple pages, moving cards across the pages requires navigation within the home view. According to one embodiment, specialized navigation options are provide to render sufficient context for the relocation across pages. In one example, a user drags a card across pages within a home view. The device in response to the drag across pages modifies the display of the home view to show a zoomed out display of the home view. The zoomed out display is permitted to violate any associated threshold with respect to number of displayed items on a page of the home view. The zoomed out display in a view of multiple pages with each element of the pages being reduced in size to allow them to be displayed in one screen. For long lists of cards, or other visual representations, this may result in extremely small visual representations or cards. It is realized that even thought the result may be visual representations so small that they cannot be fully appreciated, the user goal is to relocate a card, and the temporary loss of interactivity to the user will not impact the user operation. Once a card is relocated, the device caused the display to "zoom" back out to conform to management and organization scheme discussed, including maximal display thresholds, for example.

Navigation away from the home view may also occur through selection of the visual representations that map to computer content and/or functionality. In one embodiment, clicking on a card will zoom into that card, revealing the page view for that card. In one example, clicking on a web card caused the device to display the web page view for that card's content. In another, clicking on a channel card may invoke different behavior. In a channel card example, the navigation behavior depends on the location within the card that is clicked.

Some channel card embodiments, display items from rss feeds one at a time, scrolling through the rss items based on a timer, and in one embodiment, based on selection of navigation tools within the card. If a user clicks on the body of the channel card for example, the device causes the channel page view to be displayed for that card. If a user clicks on an rss item displayed in the channel card, the device causes a web page view for the specific content to be displayed. In one embodiment, a channel card maps to a content feed from the NEW YORK TIMES. Clicking on an article title in the channel cards causes the system to execute a mapping to the content by opening a new web card and

zooming into the new card's web page view of the selected article. Clicking elsewhere the channel card causes the system will zoom in to the channel page view for that card.

According to one embodiment, searching from the home view causes the user interface to navigate away from the home view. For example, entering search terms into search box **254**, FIG. **2**, cause the device to execute a process for generating a new web card and navigating to the page view of the newly created web card. The device in creating the new web card automatically creates a mapping to web content based on default settings. In one example, the default settings provide for searching to occur through the well known search tool GOOGLE. Other search tools may be established as the default. By accessing a system card for settings, in one example, displayed as a Settings card, a user may change the default for the search tool. Further default operations are provided by the user interface. While in the home view, any typing that occurs on the keyboard (except for hot keys and keyboard shortcuts) will be default populate the search box of the home view. Pressing return or clinking on the search tool **255**, will execute the process for a new card and pass the search terms to the default search tools, and the device displays the web page view of the default search tool and its response to the search terms.

Example Page Views

According to one aspect a streamlined user interface is provided, that permits a user to access electronic content on a device responsive to context and responsive to device configuration. According to one embodiment, an element of a graphical user interface that provides streamlined access includes a plurality of views of computer content. Another element of the GUI, includes visual representations of computer functionality and/or content that are associated with a mapping to at least one of the plurality of views. In one example, the visual representations comprise cards, as discussed above. The various types of cards can each be associated with one of the plurality of views, and may also be associated with multiple views. A high level view may be provided to manage and organize the (for example in a home view). The card may be associated with a lower level view which permits more direct interaction with the viewed content. In one example, a web page view permits a user to interact with displayed web content for a web page. Other views including a channel page view, provide lower level views that permit interaction with content specific to channel cards, and system page views provide, for example, a lower level view of system functions mapped to by the system cards. System cards may be further classified into nascent cards, and different page view provided according to classification.

According to one aspect, methods and systems for streamlining user interaction with computer content and operations may include a process for providing consistent feature accessibility across a plurality of views and a plurality of visual representations of computer content. FIG. **45** illustrates one example process, **4500**, for providing consistent accessibility to computer content across a plurality of views and a plurality of visual representations of computer content and/or operations. At **4502**, a view of computer content is provided. The view is configured to include visual elements responsive to computer focus, however achieved. The view of computer content includes a header display further comprising a focus header display and an unfocused header display. In response to focus, the focus header display reveals additional controls associated with the computer content, **4504**. At **4506**, focus is removed from the focus header display and the computer system transitions the view of content to an unfocused header display, concealing the additional controls at **4506**. In one embodiment, responsiveness to focus provides for user consistency in accessing a plurality of views and with respect to visual representations of computer content, and at **4508** a plurality of representations and views provide additional focus responsive displays, which are configured to include focused and unfocused presentations.

According to another aspect, methods and systems for streamlining user interaction with computer content and operations may include a process for providing consistent feature accessibility by providing a primary means for navigation to computer content and computer operations to occur through a consistent view. FIG. **46**, shows an example process, **4600**, for providing consistent navigation operations to a user. At **4602**, a home view is presented to a computer user. The home view presents an organization of a plurality of visual representations of computer content, **4604**. The visual representations form the building blocks of the home view. Each visual representation is mapped to computer content and/or operations that a user may select by, for example, hovering on the visual representation, by clicking on it, and by using hot keys—among other options. At **4606**, a user executes the mapping to the computer content and/or operations. In one example, execution of the mapping causes the computer to navigate to a first view of the content. In some embodiments, process **4600**, comprises further computer logic executed by a processor to access a stored mapping, and to generate the rendered presentation on the computer display of the first view.

Typically the first view comprises a navigational elements displayed in a portion of the first view. The navigational element is mapped to the home view. In one example, the home view also comprises a navigational element, and a user may toggle between the first view and the home view by executing the navigational element. In process **4600**, a user executes the navigational element to return to the home view at **4608**. In one alternative, a button, a sequence of keyboard keys, a hot key may also cause a computer system to execute a transition to a home view. In another alternative, the same button, sequence, of keyboard keys, and hot key may cause the computer to return to the first view upon a subsequent execution. Returning to the home view at **4608**, presents the user with a consistent view of content options, and the user may select a new first visual representation mapped to other computer content at **4610**. Execution of the new first visual representation caused the computer to navigate to a first view of the mapped computer content, returning process **4600**, to step **4606**. Again the user may select a navigational element to return the home view at **4608** to select yet another first visual representation. In some embodiments, process **4600**, represents a resident process that runs in the background throughout operation of a computer device. In other examples, process **4600** may be exited by powering down the computer system (not shown). And in one alternative, a user may exit process **4600** by selecting different navigational tools that execute mappings to other views. In another alternative, (not shown) a view selector may be invoked by changing a configuration of a streamlined device. Invoking the view selector can cause the computer system to execute a transition to a different view without a return the home view. In one example, invocation of the view selector by changing the device configuration from laptop to easel, causes the computer system to transition from a home view to a channel view.

Example Web Page View

According to one embodiment, a web page view is the computer implemented expression of a selected web card. The web page view is configured to present a consistent view of web based content to a user. The web page view comprise a number of elements that are maintained across the web page view of different content, although in some examples additional features may be provided to address

unique aspects of the content being viewed. In one embodiment, the web page view includes a header, **354**, FIG. **3**C, a body, **356**, optionally a scroll bar **358**, and a navigation element, **352**. It is to be appreciated that individual web page views may comprise additional elements, and should not be read as limited to elements discussed with respect to this example. The Header **354**, is responsive to focus of the device. In another embodiment, the header is responsive to the type of content being displayed. In one example, the header is further to responsive to the communication protocol user to access the web based content. The header portion may also be responsive to the state of the device, and state of the computer operation being performed (e.g. loading content).

Accordingly, in one embodiment the header **354** element of the display appears differently based on focus, content, and context of the web site being viewed. When the header is out of focus, for example, the header may be rendered in an out of focus display, shown by example in FIG. **18**A. The header display comprises navigation element, **1802**, page title **1804**, optionally a visual element associated with the web page is displayed **1806**, the visual element may be a favicon (reduced scale image associated with a website), and where appropriate the header displays a lock symbol **1808** to indicate a secure site. For secure sites, hovering over the security symbol **1808**, caused the device to display additional information regarding the security of the site. In one example, a dialogue box appears including information on the security signature for the site.

Page title provides the user the name of the page s/he is on in human-readable form. In some embodiments, when the header is out of focus, the title of the page extends to the right as far as possible. How far the title is display is dependent on what other elements are included in the header. For example, when the header is out of focus the title has the most room in the display. Upon focus, the device causes the header display to change. In one example, FIG. **18**B illustrates a header, **1850**, in focus, and device now displays additional tools in the header. Additional tools may comprise a share tool, **1852** (for sharing the web card mapping to the view), bookmark tool, **1854** (adds web page to bookmark list), more tool, **1856** (permits revelation of additional tools), search tool, **1858**, and close tool, **1860**. Additional tools may be displayed in the header on focus, including, for example, back and forward buttons, **1864** that may be used to access other pages in browsing history. Additionally, the title display from unfocused view, **1804**, FIG. **18**A, may be transformed into a web address box **1862**, FIG. **18**B. In one embodiment, focus on the header display **1850**, causes the device to transform the title display into an address box, **1862**. The address box maintains the title of the web site, until a user interacts with the address box, by for example typing into it. Once the system detects interaction with the address box, the display in the address box will indicate a url and/or uri for the current site (or whatever the user is typing). Other options may be made available through the header by display and selection of a more tool, **1856**. For example, the device displays a toolbar, **1904**, in response to user selection of the more tool **1902**, FIG. **19**. The toolbar supports operations, **1906**, provided by conventional browser of other known systems. The toolbar **1904** may also be revealed in response to keyboard short-cuts, for example, crtl-f opens a search box, **1908**, permitting the user to specify terms to find within the web page view. The toolbar display may be responsive to the content appearing in the web page view. For example, the device will display zoom tools instead of −text size and +text size in response to .pdf content.

Other standard operations and options may be supported in the toolbar. In one embodiment, the toolbar supports, find in page, find in page Next/Prev, for scrolling through hits within the page, save photos, −text size/+text size, to increase or decrease the size of the text (text sizing may be implemented globally so that changes in text size for one web page view will affect all web page views—alternatively the setting may be local to the present web page view), refresh, cut, paste copy, and print. Print and save behavior for a streamlined device does depart from conventional operation.

According to one embodiment, the header may also display additional tools whether the header is in focus or out of focus, responsive to the content of the page. In one embodiment, the header, **1890-1891**, FIG. **18**C, displays an add a channel tool, **1892**, regardless of focus (**1890** out of focus, **1891** in focus). In one example, the device determines that the accessed content has either a rss feed, or a custom view for the static web-page, and in response reveals the add a channel feature in the header. Selecting the add a channel causes the device to execute a process for generating a new channel card as discussed further herein.

According to another embodiment, the state of the content in the view may impact the tools displayed. For example, when a user is interacting with the address box (e.g. to enter a URL or URI) or when a page is not fully loaded, possible actions are limited. The device causes the header display to adjust to remove options that are unavailable (e.g. namely Share, Add channel, Bookmarks, and More), and adds the following elements Go/Stop tool **1895**, FIG. **18**D, and a status indicator **1896**. Selecting Go causes the device to initiate navigation and start loading a URL or URI listed in the address box. The stop button appears while a page is loading—clicking the button will stop the page from loading. The Go/Stop tool toggles between a presentation of Go when a page ahs not yet been loaded and Stop when a content is being accessed, for example. The status indicator may include a customized visualization. The customized visualization may be configured to tie various functions and features together. In one example, the status indicator is configured to display as a "loading spring," **1896**. **1896**, is animated to show that the device is actively downloading content. It is to be appreciated that although the Go/Stop tool is display in the same space on the header in the described example, the display for either function may also be rendered separately, or display above and below, among other options.

The header display may be further responsive to focus and selection. In FIG. **18**E, shown is a header after selection of the search tool **1858**. In response to selection of the search tool, the device alters the heading display to include an search box **1898**, for entry of search terms. Once the search is initiated the device alters the header to eliminate search box **1898**.

Navigation within Web Page View

According to one aspect, navigating web pages within the web page view is similar to existing browsers on other systems. For most links, when a user clicks the link, the device executes a process to load a new web page into the body of the current web page view, replacing the contents of the current page. The device operates different in response to links that request a new window. For new window links or new tab links the device executes a process to generate a new web card, and further the new card is mapped to the link destination. The device executes functionality that causes the display to "zoom" into the new card and present the content from the link destination.

According to one aspect, transitions between active web page views occurs through the home view. The user selects a navigation element (e.g. **352** FIG. **3**C) to return to the home view, alternatively, a navigation button (e.g. **168**, FIG. **17**) will return the user to the home view. In another embodiment, hot keys and/or shortcut keys may be employed to cause the system to return to a home view. In response to selection of the shortcut and/or hot keys, the device executes a transition to the home view. From the home view a user may select any other card or generate new cards, as discussed above.

Creation of channel cards occurs differently from a web page view, than when done in a home view. In one embodiment, in response to selection of add channel in a web page view, the system returns to the home view, displays the creation of the new card, and presents the creation of the new card so that both the new card and the web card from which add channel was selected is displayed. In this example process any maximal display threshold may be ignored in order to display both the originating card and the new channel card. Once the card generation is complete the system zooms back into the original web page view for continued browsing. Alternatively, a system may enter a channel view of the newly created channel creation. In one embodiment, the behavior of the system may be altered according to settings accessed through a system card, and in one example a settings card.

Channel Page View

According to one embodiment, the channel page view is the zoomed-in computer implemented expression of a channel card. A channel page view presents a unique view into content made available through a website. The channel page view employs visualizations similar to corresponding visualization on channel cards but the large format of the view allows for a better display of content, and provides for increased interaction with users. The channel page view also comprises a mapping from the display content to the source from which the content is derived. Typically, content displayed in the channel page view is derived from an rss feed associated with a web-site. Additionally, some non-rss sites have customized visualizations that can be accessed through a channel page view.

According to one embodiment, the channel page view configured to present a consistent framework for user interaction with rss style content. The channel page view comprises a number of elements that are maintained across the channel page views of different content, although in some examples additional features may be provided to address unique aspects of the content being viewed. An example channel page view is illustrated in FIG. **20**A, **2000**. The channel page view shown includes a header **2002**, which includes a display for the title of the channel page view, **2006**, a share tool, **2006**, web link **2008**, and status indicator **2010**. The header may also include navigation element **2012** for returning to a home view among other functionality. The channel page view also includes a body **2014**, for displaying available rss items **2016-2022**. Selection of the displayed rss items **2016-2022**, caused the system to display the web page view of the selected article, web link **2008**, shown as "go to web page" in FIG. **20**, creates a new web card for the page from which the channel was created.

Other channel page views may also be employed. FIG. **20**B, illustrates another example of a channel page view, **2050**. Shown in **2050** is a specialized channel view for a news channel. Example view **2050** is separated into two scrollable columns, providing a headline column **2052**, for displaying individual rss items and a content column Content column, **2054**, presents the details of rss items (if the content does not require additional space other than the displayed screen a scroll bard will not be displayed). The content column shows the headline, **2056**, includes the time the item was posted **2058** (in one example relative to current time), the author, **2060**, and the item's description, **2061**, in its entirety. According to one embodiment, images and/or script (html, xml, etc.) may also be displayed in the content column (not shown). The content column may also comprise a navigation element, **2062**. In one example the navigation element is labeled "full story." The system launches the item's url as a new web card, and transitions to a web page view of that url in response to selection of **2062**. Optionally, focus and/or hovering over the full story button causes the system to generate a preview view of the new card that would be created in response to selection of full story.

Selection of one of the content items, e.g. **2070-2076**, causes the system to display the headline, author, posting time, and full description for the selected rss item. Scroll bar, **2080**, is displayed if the number of items in the headline column, **2052**, require additional pages of display. A scroll bar may be display in the content column as well, if the content display requires additional pages. According to one embodiment, channel page views are configured to retain current state. The system accesses retained state when revisiting a channel view. According to one embodiment, a process for accessing a channel page view determines if any state information is retained for the channel page view. In response to a determination that state information exists, the system presents the last accessed content item in the content column If the last content item is no longer available, the system selects the first content item by default.

An alternative view of channel content comprises a full screen view of rss items. In one example a channel full view comprises a headline display center in the screen.

According to another embodiment, preview text is displayed in conjunction with the rss item. In one example, the channel full view includes displays configured to identify the source of the rss feed. In another example, a logo for the source feed is captured and displayed as part of the channel full view. In response to selection within the channel full view, the system displays a content menu permitting selection of any of the rss items for the content source. In one embodiment, the content menu appears as a list of rss items displayed at the lower portion of the channel full view. The content menu is configured to be responsive to manipulation of the embedded scroll wheel. Manipulation of the scroll wheel progress through the displayed content menu, and in response the system displays the selected content in the full view with preview text appearing below. Shown in FIG. **21** is an example of a channel full view **2100**, with content menu **2102** activated by selection. Manipulation of the scroll wheel causes the system to scroll through the items in the content menu. In one embodiment, the content menu transitions between selections by rendering the apparent movement of the entire content menu either to the left of the right depending upon the orientation of the manipulation of the scroll wheel. Alternatively, the content menu is also responsive to arrow keys on the keyboard. Depressing an arrow key cause the system to display the apparent movement of the content menu to the next item.

According to some embodiments, the various channel views, for example, page and full view may also include animations of transitions between available rss feed items. Default operation of the streamlined computer system and streamlined user interfaces cause the system to display transitions from one rss item to the next in association with

a time period. Transitions may include animations that cause the system to display new rss items sliding into position as the previous rss item slides out of view. In one example, an rss headline item slides out of view in response to the next headline item sliding into view. The device and user interfaces may also be responsive to manipulation of the scroll wheel. For example, manipulation of the scroll may by default invoke a transition to a channel card view.

System Page View

According to one embodiment, the system page view is the zoomed-in computer implemented expression of a system card. The system cards provide a user with the ability to interact with the device's settings and other computer operations. System cards also enable a user to access customized functionality, for example, photo and video interactions. According to one aspect, certain interactions with computer content are identified as special. The identification of special interactions is reflected in render those operations as system cards. System cards have the property, that they cannot be removed by a user. This insures that identified functionality remains available regarding of user intention. Additionally, the number of system cards can be limited, providing a distinctive interface element for system operation and important interactions even within the streamlined GUI. In one embodiment, system cards are limited to a photo and video card (controlling photo and video operations), a settings card (permitting access to device settings), a bookmark card (discussed herein), a camera card (permitting set and interaction with a camera), and a browse the web card (discussed herein). Although it is to be appreciated that other system card may be implemented and the invention is not limited to the system cards provide as example above.

The anatomy of the system card is similar to the anatomy of other cards. For example, an embodiment of the system card includes a header, **2202**, FIG. **22**, a navigation element, **2204**, a title **2206**, and a body **2208**. As discussed herein, nascent cards may be categorized as a type of system card. Alternatively, nascent cards may comprise their own category. While nascent cards share a similar format as the other cards, nascent cards do not have a page view. Nascent cards map directly to system functionality, that is executed upon selection or as part of a call from another process.

Channel Card View

According to one aspect, a channel card view is provided to display high level navigation options to a user, to enable streamlines selection of content and operations by making selections within a streamlines view. Similar to the home view the channel card view is configured to render a consistent organization of navigational elements of a streamlined graphical user interface. Unlike the home view, the channel card view is not based on pages of display, rather the channel card view is organized to display only one type of content, that is content that may be rendered in a channel (i.e. having an rss feed or customized visualization, and for special system cards). The channel card view is available in both laptop and easel modes of the streamlined device. In response to configuration of the device into easel mode, the channel card view is rendered by default. The content displayed in the channel card view is dependent on the channel cards displayed in the home view. Alternatively the channel card view may be invoked by operating the scroll wheel embedded in the device.

In response to operation of the scroll wheel, the system displays the channel card view, FIG. **23**, illustrates an example of a channel card view, **2300**. According to one embodiment, the channel card view comprises selector display **2302**. In another embodiment, the channel card view includes a selector display, **2302**. The selector view is invoke upon the first click of the scroll wheel while in easel mode, in laptop mode, additional clicks may be required to invoke the channel card view and selector. In one example, the three clicks are necessary to invoke the channel card view while the device is in a laptop mode. In another example two clicks are required. Upon invocation the channel card view comprises a visualization of the channel cards available for selection. In one example, the visualization resembles and behaves like a rolodex. As the user moves the scroll wheel individual channels **2304-2310** appear to flip around the hinge of the device. In response to selection, the foremost channel card displayed is selected and displayed full screen. In one example, selection includes activation of button **168**, FIG. **17**, from the easel mode of the device, although in laptop mode selection can occur in a number of ways including by operation of button **168**. In another example, a different button may be selected or short cut keys selection, among other options.

In response to selection from the channel selector view, the system displays a channel page view. On example of a channel page view for photo content is shown in FIG. **24**. According to one embodiment, the channel page view of the photo content automatically scans though each photo by default in the channel page view. The photo display restarts again at the begin when the end of the photo content is reached. In another embodiment, the default operation is to display only the selected content item (e.g. photo). FIG. **25**A, illustrates an example logical diagram of the behavior for the channel view. From channel page view **2502**, selection of the menu button (e.g. FIG. **4**, **166**), caused the device to display the content menu, **2504**, over the present channel page view. Selection of the menu button from the content menu, causes the device to display the selected content item in a channel page view **2502**. From channel page view **2502**, operation of the scroll wheel (e.g. FIG. **4**, **132**), causes the device to display channel selector view **2506**.

According to one embodiment, photo content displayed as a channel in the user interface, can be accessed similarly. Shown is an example of channel functionality, in logical diagram **2550**, FIG. **25**B. From channel page view **2552**, of the photo channel, selection of the menu button (e.g. FIG. **4**, **166**), causes the device to display the content menu, **2554**, over the present channel page view. Selection of the menu button from the content menu, causes the device to display the selected content item in a channel page view **2552**. From channel page view **2552**, operation of the scroll wheel (e.g. FIG. **4**, **132**), causes the device to display channel selector view **2556**.

According to one embodiment, channels for displaying video content and/or audio content operate with a different logical flow. In one example, additional interactivity is required to allow a user to, for example, stop a video, start a video from the middle, among other options. According to one embodiment, the streamlined device must be able to accommodate routine operations through manipulation of only a scroll wheel and a mouse, for example when the device is in an easel mode. It is to be appreciated that in other configurations the logical flow for the behavior of the channel view may be different, and may take advantage of addition input/output devices available in other device modes. Shown in FIG. **28**, is an example of a logical flow for device/UI functionality, during the normal operation of a channel view of video content. At **2802** shown is a channel page view of video content, select of button (e.g. FIG. **4**, **132**), causes the device to display contextual menu **2804**. Contextual menu, includes a visual representation of select-

able options, **2806**. The selectable options rendered include at least a rewind/fast forward selector, resume selection, other episodes. Selection of rewind/fast forward selector invokes a timeline controller **2809** shown in the content page view, **2808**. The time line controller is responsive to rotation of the scroll wheel, providing fast forward in one direction and rewind in the other. From **2808**, selection of button **132** causes the device to return the view to channel page view **2802**. Selection of resume form **2804**, also causes the device to return the view to channel page view **2802**. Selection of other episodes from **2804** causes the device to invoke content menu **2810**, which provides a selector view of available content for the channel. Selection of content, **2811**, from the selector view causes the system to play the selected content in channel page view **2802**. From channel page view **2802**, the devices displays channel selector **2812**, in response to operation of the scroll wheel. The logical flow illustrated may be used for interactions with audio content as well, for example, to control playing of .mp**3** or other audio file.

Selecting Device Configurations

According to one aspect, systems and method for streamlining user interaction with electronic content include a plurality of physical configurations for a streamlined device, the streamlined device may be, for example, a portable computer. As discussed above the plurality of configurations may represent modes of operation of the device, and include for example laptop mode, easel mode, among others. According to another aspect the user interface that governs interactions between the user the device and accessed content is responsive the selected mode and/or configuration of the streamlined device.

According to one embodiment, the streamlined device retains information on device configuration and/or mode. In on example, information is maintained as a state variable in a systems register. In another example, the system may obtain state from signals provide by an embedded sensor, as discussed above. The state information may be used to generate a system response, when the device detects a change in configuration and/or mode.

In a typical setting a user interacts with a streamlined device in one of two viewing modes. The two viewing modes reflect a level of interactivity with the device being viewed. A lean forward view encompasses interactions between a user and conventional computer systems. One example includes a user typing at the keyboard of their laptop computer, in essence, the user leans into the computer device and display to perform interactions and view content. Similarly a user's interaction with desktop computers are conducted through a forward mode of interaction. It is realized that traditional computer devices and systems are notorious bad at permitting interaction with content and the device from greater distances.

Interactions with content and other device for example a television are included in the second type of viewing mode. A lean back mode of viewing is meant to encompass ordinary television viewing, and the interactions a viewer has with their DVR for example. Television and their associated devices and configured to provide for lean back styled interactions. It is realized that conventional system and methods fail to provide for the transition from lean forward to lean back interactions. As discussed above, streamlined devices can accommodate a plurality of configurations, and individual configurations may be designed to accommodate the different viewing modes. Additionally, the streamlines user interface is configured to be responsive to the configurations. For example, transitions from a laptop mode of the device may trigger changes in the user interface. According to one embodiment, a transition from laptop mode to easel mode, causes the device to transition from either a home view or web page view to a channel selector view. The transition from laptop to easel, may also trigger a transition from a channel page view to channel selector view. In one alternative, the transition causes the device to display a channel full view for that channel card. The transition from easel to laptop may also cause the device to alter the view displayed to a user. In one example, if a new card has been shared, the device causes the home view to be displayed. The last page of the home view is displayed where the new card is rendered.

According to another embodiment, methods and systems for streamlining user interactions may include a process for transitioning between different user viewing positions. Shown in FIG. **48**, is an example process **4800**, for permitting a user to select a viewing mode for a streamlined device, and in response displaying a user interface view configured for the selected viewing mode. At **4802**, a streamline computer system presents computer content using visual representation optimized for different viewing modes. In particular, ones of the visual representations are configured to display in a "lean forward" user viewing mode and a "lean backward" viewing mode. In one example, a lean forward user viewing mode includes a user typing at a keyboard of a laptop computer. In another example, a lean backward user viewing mode includes a user viewing a television from a distance. One should appreciate that the examples provided are illustrative and are not intended to be limiting. A streamlined device permits a user to select a device configuration most suited to a particular user viewing mode. For example, a user may rotate a streamlined device's display relative to its based about an longitudinal axis, transitioning the device from a laptop mode to an easel mode. According to one embodiment, the easel mode of the device permits improved "lean back" interactions with computer content. In other words, the easel mode makes it easier to view the streamlined device's display from distances greater than conventionally used with laptop computers. Selection of a lean backward user viewing mode at **4804**, triggers the streamlined device to transition to a content display that improves user interaction. On one example, in response to the user selection at **4804**, the computer system display transitions to a channel viewing mode at **4806**. The channel viewing mode is configured to present computer content, in large footprint displays, and further is designed to streamline user interaction with the streamlined device by permitting access through a first I/O profile associated with the streamlined device in easel mode. The first I/O profile in easel mode may consist of a scroll wheel and a selector button. In some embodiments, the first I/O profile may include a volume control.

Other processes may be invoked to cause a user interface to transition between views in response to changes in device configuration. Shown in FIG. **49**A, is an example process **4900**, for transitioning between a lean forward view to a lean backward view. At **4902**, a user changes the streamlined device configuration from laptop to easel mode. In response the computer system switches view from its current view to a channel view. In some examples, the computer system is already in a channel view, and no transition is implemented. The easel mode of the streamlined device is associated with a first I/O profile including an integrated scroll wheel and a selector button. Upon manipulation of the scroll wheel, a view selector causes the computer system to display a progression through a sequence of channel cards as the

scroll wheel is rotated, at **4906**. Optionally the sequence may include other customized cards (in one example a photo and video card). Upon selection of a displayed channel card, a channel full view is invoked at **4908**. The channel full view displays the content of the selected channel card in the entirety of the computer system display screen. The system returns to the channel view in response to further rotation of the scroll wheel.

Shown in FIG. **49**B, is another example process, **4950**, for transitioning between user views. At **4952**, a user changes a device configuration from an easel mode to a laptop mode. In response to the change in mode, the device displays a home view of available content, at **4954**. In some examples, the system may already be in a home view and no transition occurs. The user may interact with the streamlined device through a second I/O profile at **4956**. In some embodiments, the second I/O profile includes a keyboard, a touch pad, buttons, web cam, and a scroll wheel.

Streamlined Device Community

According to one aspect, a common experience may be created for multiple users, fostering a community experience. According to another aspect, the common experience may also include a community aspect. The community aspect includes sharing of content between users, sharing of content and configurations, sharing of content, configurations, and customizations, among many other options. In particular, sharing may involve the transmission of user interface elements to other users. The visual representations that map to content and/or computer operations on one device may be transmitted to another device or another user. In one example, a user may share a card and any of its configurations with another user. Access to the shared user interface elements, in some embodiments, facilitates communal computer usage. In one example, a first user may be watching media on their streamlined device, another user known to the first user, may receive a user interface element that retains information related to the accessed content and information related to the present context. That is for the first user watching a movie, the first user may share the user interface element (e.g. a channel card mapped to video content) through which s/he is accessing the move, and permit the another user not only to watch the movie, but to take up the movie at the same point in time, so in essence, they get to enjoy the movie together. Content and context retention by user interface elements that can be shared provides unique advantages to the users of the streamlined devices.

In some embodiments, the community aspect incorporates formation of groups. In one example, groups are formed based on at least one of a social relationship, familial relations, work relationship, etc. Different groups may share different content and even different context for the same content through for example, shared user interface elements. Groups may be further organized into nodes or a node may comprise the group. In some examples, a family forms a node regardless of the family's location relative to each other. As part of the configurations that may also occur as part of the device's purchase, at least one of the users identifies his/her family members. The family members are configured into a node. The node may be used to permit sharing of content. The node may be used to permit sharing of cards. Further updates to configurations on device in the node may be propagated automatically to other devices in the node.

Communication between groups members may take place over the internet. In one embodiment, a sub-network utilizes the internet or other communication network to communicate between streamlined device users. In another embodiment, a service is hosted for streamlined device users to facilitate communication. The service may also be connected to the internet and in one example functions as a gateway between users, their devices, content, sharing, and communicating. The service facilitates real time sharing, in one example a user may share a movie s/he is viewing with another. Not only may the user share the information that s/he is watching a movie, but the user may allow another to watch the movie starting at the same place, allowing the users to perceive they are watching the movie together.

FIG. **29**A, illustrates an example interaction between a user, the device, and the user interface, where the device causes a web card to be shared to other users. Shown is web page view, **2900**, in response to user selection of share **2902**, the device displays a share interface **2904**. The device accesses the user profile to determine any groups or to nodes that the user has created. In example view, **2900**, the user has only one group, family members **2906**. Each entry listed in family members represents another streamlined device/user. Box **2908** permits sharing of the card with other users of conventional systems. Comment may be included. For example, a user may type any comment on the card being share into box **2910**. Comments entered on a shared card are display with the card on receipt by another streamlined device user. The user selects any one or more of the listed members **2914-2920**, or the user selects **2912** to share the card with all the listed members. Once the selections have been made and any comments entered the user selects **2924** Share! And the card is transmitted. By selecting Never Mind **2924**, the device closes the share interface. In FIG. **29**B, shown is an example of a web page view after a share operation has been completed. At **2950**, the device notifies the user that the selected item has been shared. For other streamlined device users share content is received by their streamlined device as a web card. For other users, an e-mail with a link to the content is delivered. It is to be appreciated that FIG. **29**A, illustrates a user with one group or node. In other embodiments, a user may be permitted to generate a plurality of groups or nodes. Box **2926** may first display a list of groups, that a user may select from, in order to show the members of the selected groups. In one embodiment, box **2926** lists more members that can be accommodated in the space provide by the interface. An optional scroll bar may be displayed into to permitting display of additional group members.

FIG. **30** illustrates an example of a received shared card, **3000**. The state of the streamlined device may impact behavior of the device in response to receipt of a shared card. In screensaver mode, a streamlined device presents received shared cards as part of the screen saver view, **3000**. Comments included with the shared card, are presented in an overlay box **3002**, and any text that does not display is a first screen is scrolled into view **3004**, while the content of the shared card is displayed. The overlay box **3002**, may include an image of the user who shared the card and/or content, at **3006**. Shared display **3000**, may also include an indicator regarding the number of content items in the shared card. For example at **3008**, the number of content items in the photo set being displayed indicates 1 of 4. Other information associated with individual content items may also be displayed at **3010**. In the screen saver mode, the shared content items are each display, a timer controls the length of time each item is display before continuing on to the next item. The device then returns to any screen saver content that was being displayed when the shared card came in.

For users receiving shared content while in an active view (e.g. non-screensaver views), the system may provide a notification message to indicate shared content. From the home view, for example, the system generates notification message to display in a message bubble. An visual indicator is employed to notify the user that a system message is present. In one example, the navigation item displayed in the home view (e.g. FIG. **2**, **250**), is animated to indicate a message. An example notification is illustrated in FIG. **31**. Navigation element **3102** may be animated, the device displays message bubble **3104** upon focus resolving on element **3102**. The user may select **3106** or **3108**. Upon selection the device displays the shared card of **3106**, or the device returns to the home view **3108**.

Similar notifications may be employed in conjunction with other views. Further similar notifications may be used for other contexts. In response to displaying a web page view of a web page with stored user name information, a device may present a notification message regarding the availability of account information. FIG. **32** illustrates an example message for a site with two stored accounts. By default the system displays the content without using the stored account information. The device causes the message to disappear if a selection is not made, or if browsing activity continues without selection of an account. According to some embodiment, notifications can either require a response/action or the notification may disappear if no action is taken. Typically, notifications that do not require an action are used to convey information.

In one embodiment, from channel view in laptop mode, the notification of the arrival of new cards is the same as in home or page view. Typically navigation element **3302**, FIG. **33**, does not appear in the channel view. In response to a new card, the device displays **3302** and may animate its display. In response to focus on the **3302**, a notification bubble **3304** appears. The system displays the home view for the page containing the first new card in response to selection of **3302** or **3306**.

When a notification is available in channel view, moving the scroll wheel invokes the Channel Selector view, but the system displays the first new card default (instead of the current channel). When in channel view in easel mode, the notification of the arrival of new cards is similar as above, except that both the navigation element and the notification bubble may appear at once. Shown in FIG. **34**, is an example of a notification message from a channel view while in easel mode. The system displays both **3302** navigation element and **3404** message bubble together in response to shared content.

In one embodiment of a streamlined device, the user interface is configured to provide for passive viewing of selected content through a screensaver mode. The device enters screensaver mode in response to the expiration of a idle timer expiring. Any interaction with the device causes the device to exit screensaver mode. In screensaver mode, channel cards and content are display in order. An idle time out period may be established to force a transition to a new channel in the event the idle time out period is exceeded before all the content of the channel is displayed.

According to some embodiments, the community experience is enhanced through particular features and functions facilitated by the device, the user interface layer, and/or configurations designed to facilitate interaction among users (either with the device features themselves or also with third party services). According to another aspect, community experience and/or community learning furthers adoption and/or integration of new computer features into a particular user's routine. It is realized that facilitation of communication and/or content sharing across users improves introduction of features and increases the likelihood of their adoption. Context and content sharing are provided for and through streamlined interfaces. The sharing opportunities may be device sensitive, that is, a user with a same/similar device can be identified by a specific user. The users with identical devices may have the most options for how to share, what content to share, context settings, and may also include the ability to share features associated with the content. In one embodiment, a user may enable features associated with a card based interface and through sharing the card make another user aware of features of the card interface that the receiving user was unaware of. In another embodiment, the shared card provides all of the configurations established for the originating card. In one alternative, security features may be invoke to clear certain settings of a card to insure that for example, banking information is not shared to another user. In another alternative, the user selecting share is prompted to confirm the share request. In response to a security identifier, the prompt to confirm includes a warning banner regarding the identified security issue. In one example, a user receives a warning that sharing a card including banking content may compromise the bank accounts referenced. In another embodiment, a share request with an identified security issue is denied.

In some embodiments, the community aspect incorporates formation of groups. In one example, groups are formed based on social relationship, familial relations, work relationship, etc. Different groups may share different content and even different context for the same content through for example, shared user interface elements. Groups may be further organized into nodes or a node may comprise the group. In some examples, a family forms a node regardless of the family's location relative to each other. As part of the configurations that may also occur as part of the device's purchase, at least one of the users identifies his/her family members. The family members are configured into a node. The node may be used to permit sharing of content. The node may be used to permit sharing of cards. Further updates to configurations on device in the node may be propagated automatically to other devices in the node.

According to another embodiment, sharing options may also be adapted to different devices being operated by sharing users. For example, certain features may be disabled when a card or content is shared outside of a streamlined device community. In some embodiments, communities may be based on the device being employed, membership in a group, and/or membership in a node. Additionally communities may be based on social interactions, familial relationships, etc. Examples of communities include name lists of user identified by the device operator. In one example, community lists and/or community groups are pre-generated in response to questions asked of a potential purchaser. User names may also be added and maintained by the user. Additionally, the system may create community lists on behalf of a user based on the user's activity.

For example, when composing and sending an e-mail, the system may query the user to determine if the recipient should be within the user's community. In one alternative, the system may add the recipient to a potential community and make the addition subject to a later confirmation. In another option, the e-mail recipient is added by default to a group with minimal sharing options. The user is provided the option of changing the group associated with the recipient. Additions to community list may require additional configurations to become effective. For example, the device

user may be required to accept additions, a device user may be required to identify if the added name corresponds to another user of a similar/same type of device, among other configurations options.

Specialized Operations

According to another aspect, certain features of convention computer interactions have been specially configured to present streamlined interaction between a device, a user, and content. In one embodiment, the device does not incorporate mass storage (i.e. a hard drives), instead the system is configured to employ RAM and Flash memory storage. The capacity of the flash memory is significantly less than traditional mass storage options. Thus in some embodiments, traditional features such a download, have been configured to operate differently for a streamlined device.

In one example, download links do not cause a streamlined device to download content. Instead, a download link is interpreted by the device, which initiates a process for handling download links. An example process includes accessing a third party provider of remote storage to retain the content identified in the download link. According to one embodiment, the purchase of a streamlined device, include creation of an account with access to on-line storage. In one example, remote storage for a device is provided in conjunction with user information stored to customize the device and configure its operation to the particular user.

In one embodiment, customized configuration files supply information required for integration for known third party providers. In some embodiments, customized configuration files are used to establish default interactions with for example, Shutterfly, an on-line third party photo management and sharing service. In other examples, customized configuration files are used with other third party on-line service providers. Other third party provides include GMAIL, HOTMAIL, YAHOO! MAIL to provide examples of e-mail service providers. Other provides include, for example, on line banking providers, financial system providers, university systems, web site development providers, dating services, and social networking sites. One should appreciate that the integration of an on-line service need not depend on a predetermined configuration file or settings, rather, various embodiments of the systems and methods are adapted to learn from user interaction and develop appropriate configurations. Certain embodiments are further configured to take advantage of configurations developed by other users of such systems and methods, permitting sharing of content, sharing of configurations, etc. According to one aspect, by using input from the users, learning from user interactions, permitting content sharing, permitting sharing of configurations, and by providing default configurations for more popular services almost any on-line service can be integrated.

Still other embodiments, may query the user upon entry/access into a new service for any information necessary to configure the device to provide streamlined presentation and integration of the third party service. In some embodiments, the process of streamlining user interactions with electronic content includes querying the user regarding subscribed services and/or functions the user would like to use on their computer. For example, during processing of a purchase of a streamlined device a prospective purchaser receives a query form, or the user may receive individual questions regarding the purchaser's present computer use. In one example, the questions will generate a profile of subscribed services, whether pay or free, and customize the user interface to permit streamlined interaction with those services out of the box. In one example, default configurations and/or questions designed to elicit required configurations, allow the user to interact with GUI elements customized to his/her current use and preferences.

A process for handling download links may be responsive to the particular content selected for download. In one example, the system analyzes the selected download link to determine the type of content selected for downloading. In response, the system identifies accounts held by the user for processing the selected content. If multiple accounts exists that handle the selected content, the account first created is used by default. A user may alter default operation through use of system settings. For photo content, as one example, the system identifies the content as a picture (.jpg, .gif, .tif, etc.). The user's profile contains information for accessing FLICKR, a third party provider of photo access and management services. The download link is interpreted into an operation to transfer the file into the user's FLICKR gallery. Other services may be used to host the content, for example, the download link may be interpreted to cause the system to upload the photo to the well known MYSPACE or FACEBOOK services. For content that cannot be identified, the streamlined device causes the download request to be interpreted as a delivery request to a generic remote storage service. The remote storage service may be one provided through a third party provider, or may be the remote storage space provided by a seller of the streamlined device.

An example process, **4200**, is shown in FIG. **42** for streamlining user interactions with digital content. The user interaction with digital content is streamlined by enhancing features for simplifying user decisions by providing access information associated with multiple user accounts for a particular online source. Multiple account profiles can be retained and presented to a user of a streamlined device. Example process **4200** begins at step **4202**, permitting a user to access electronic content through the streamlined device. At **4204** the source of the electronic content is determined and matched against available access information. Access information may be stored in a device profile or in another example in a user profile. These profiles may be loaded at startup of the device or may be accessed in real time when a content source is determined. At **4204**(NO) no access information is available for the content source, and the electronic content is display at **4206**. Example electronic content includes web pages and other online resources. At **4204**(YES) the content source is matched against available access information. At **4208**, access information is displayed to a user in a user interface. The access information typically identifies a user account available to access the content source. In one example, for an e-mail service this will include the e-mail address displayed in the interface. A plurality of access accounts may be available for a given service. The streamlined device is configured to handle multiple users with multiple account to any given services. The user interface permits the user to identify which access account is desired. At **4210**(NO) the user does not identify an access account, and at **4212** a default access account is used. The default access account does not provide any account information, and the content source page is display, at **4216**, not including any sign-on information. At **4210** (YES) a user selects an access account and at **4214** the access information is passed to the content source, and the displayed content at **4216** will return content after the sign-on process has been completed.

In another embodiment, a process for handling download operations is provided. The process includes causing the device to display a download interface, for example interface, **3500**, FIG. **35**. The interface presents the user with

options for processing the download request. Box **3502**, lists members of the user's group to whom the user may send the file. Box **3504**, permits a user to enter e-mail addresses to send the file as an attachment or as a link if a size threshold is exceeded. For a user who has configured third party service capable of handling the file content, Box, **3506**, displays the configured providers (e.g. Shutterfly **3508**, Flickr **3510**, DropBox, **3512**). Each configured service displays with the account name configured for the service, for example at **3514**.

In one example, process, for interpreting download operations also includes displaying the interface in response to computer focus on the download link. In another example, hovering over the link causes the system to display a download interface. For files sent by e-mail the system may be configured with a maximal file size for particular e-mail services. Typically files sizes of less than 5 MB are not filtered, thus is the e-mail domain address is not recognized, a default threshold of 5 MB may be used. For services with known size constraints the system will transmit the file to the e-mail address. If the constraint is exceed, the system transmits a link to the file instead of the actual file.

Another to another embodiment, selection of print operations may be handled in a similar fashion as to downloads. When a printing device is attached to a streamlined device, printing proceed as known conventionally. When a printer is not attached, a process for interpreting print operations may be invoked. The process for interpreting print operations, includes causing the device to display a print interface **4102**, FIG. **41**A. The print interface provides box **4104** listing group members, **4106** listing configured services, and box **4108**, for entering destination e-mail addresses. Selection of **4110** sends the item in a print format, in this example a .pdf file. In other examples, different file formats will be displayed as part of **4110** (e.g. word, doc, txt, wpd, xls, etc.). in some embodiments, file size limitations will be employed on delivery of print format files. FIG. **41**B illustrates in greater detail examples of print **4150** and download interfaces **4152**. Print and download operations may invoke a progress bar displayed over the current view, with the option of canceling transmission.

In another embodiment, a streamlined system includes the following features:

- Employs remote mechanisms to access and/or deliver files
- Mechanisms include indentifying a remote action in response to file type
- Web Content Support for system that does not utilize local memory for storage
- In response to download selection (i.e. request to locally store content) display message regarding new functionality (transfer or remote store)
- Maintain user profile—associate web service providers for a particular user
- web services—remote storage, email, photo sharing, custom web page info, storage accts (e.g. Drop Box and Google Docs)
- In response to mouse over/selection/hover/indication of selection display interface to enable remote delivery of content/file
- Providing for selection of remote delivery to a domain (including home network) including an act of verifying the content/file's size does not exceed a threshold value
- In response to passing site check deliver content/file as attachment
- In response to fail, store in provided remote storage, generate link, and deliver link to content/file

According to one embodiment, a method for streamlining user interaction with electronic content includes a process for interpreting online executable operations into streamlined operations. One example process, **3600**, FIG. **36**, for interpreting online executable operations into streamlined operations includes the step of permitting a user to access digital content online, at **3602**. The online digital content is presented to a user through a graphical user interface at **3604**. The GUI permits a user to select executable operations in the presentation of the online digital content, at **3606**. In response to selection of the executable operation, the computer system determines if the executable operation requires local access. In one example, the executable operation includes a download operation that would cause a conventional computer system to store a file on a local mass storage device such as a hard drive. In response to the determination that the executable operation requires local storage, a streamlined computer device transforms the executable operation's local access request into a remote access operation, at **3608**.

In one example, the remote access operation includes a storage request to a online service provider. Various online service providers permits remote storage of various computer files. Certain service providers optimize the provided service for specific file types, such photo management and sharing services. Other examples include e-mail access providers, video and audio media management and presentation services. In other examples, a service provider may offer generic data storage not specific to any file type. In one embodiment, step **3608** includes transforming a download request to a local mass storage device into a storage request to a remote service. The example process can include acts of identifying the file type associated with the download request, and selecting a service provider based on the identified file type.

In another example, the executable operation that requests local access to storage on the streamlined device may include a print operation, a save operation, a copy operation, a paste operation. Typically the streamlined device is configured to transform save, download, and print operations into remote storage operations. According to one embodiment, a print operation may be streamlined to permit the print operation without an attached printer. According to one embodiment, in the absence of an attached printer, a print request generates a print file in response to execution. Conventionally the print file would be stored locally on a computer hard drive. In some embodiments, a streamlined device does not employ local mass storage devices such as hard drives. Such streamlined devices are configured to transform local storage request into remote storage operations. In one example the print file may be directed to a generic storage provider, and the file stored in the remote memory associated with the generic storage provider. In another embodiment, the system checks the resulting file size for the print file. If the size of the file exceeds a threshold, then the system may further streamline the operation. For example, by providing a link to the file and transmitting the link to a destination. A link may be transmitted through an e-mail instead of transmitting the file itself, for example.

Another example process may be used in conjunction with **3600**. In one example, a sub-process, **3700**, FIG. **37**, for permitting selection of executable operations in online content can be employed. At **3702**, computer focus is resolved on an executable operation embedded in online content. Executable operations can include download, print, save, transfer, retrieve, get, fget, and generally comprise opera-

tions that require a large memory block of nonvolatile storage, and in particular hard drive space. A streamlined computer device includes logic stored in memory and executed by a processor to analyze a focused executable operation, and at **3704**, the executable operation is analyzed. The logic may include programming to trap download request for example. Once a request is trapped the streamlined device can determine what action is appropriate based on the type of request. At **3706**, it is determined whether the executable operation requires local storage. At **3706**(No) local storage is not required and the executable operation is performed at **3708**. At **3706**(Yes) it is determined that local storage is required and the operation is transformed into a remote access operation at **3710**.

Example process **3600** may include additional sub-processes and/or individual steps performed in process **3600** may also comprise other processes. In one example sub-process **3800**, FIG. **38**, for transforming online executable operations associated with local storage into remote storage operations may be employed as part of a larger process, for example, process **3600**. At **3802**, a streamlined computer system identifies a result of an executable operation identified in a web browser displayed on the system. At **3804**, a file type associated with the operation is identified. At **3806**, at least one of a device profile and a user profile is accessed, to retrieve available services, **3808**, that may be appropriate for the particular file type. Various services for a particular user may be associated with the device itself, and a plurality of users may have access to multiple services or even more than one account for an individual service. Logic stored in memory and executed by a processor may determine matched services at **3810** by accessing information stored in at least one of a device profile and a user profile. The access information may contain records on available services, their access information, and the access information may include a file type designation for a particular service.

In one example, executed logic matches a file type associated with the executable operation to a file type associated with a remote service **3810** (YES), and in response the computer system retrieves access information for that remote service at **3812**, the local access operation can be redirected into a remote service operation at **3814**. For example, the computer system may access the remote service using the obtained access information, and provide an interface to transmit the object (data) of the local access to a location within the remote service. In one embodiment, a default service may be configured for any streamlined device. In the absence of matched services at **3810** (NO), the computer system may invoke a default remote service at **3816**, obtain the default service access information at **3812** and redirect the local access operation into a remote service operation at **3814**.

In another example, process **3800** may be coupled with an interface display presented to a user of the streamlined device. And step **3812** may be used to populate a user interface with a plurality of matched services. The interface may also display additional information associated with the service, for example an account name may be display to permit a user to distinguish between an account s/he set up as opposed to another user. The system may permit the user to designate the remote service appropriate for use in the interface and step **3814** occurs to redirect the local access operation into the user selected remote service.

In another embodiment, an example sub-process, **3900**, FIG. **39**, for obtaining service access information may be employed to retrieve remote service information. Example process **3900**, includes an act of accessing at least one of a device profile and user profile to obtain matched services at **3904**. Obtaining matched services may include filtering from the available services, or it may include retrieving all available services listed in the at least one of a device and user profile. In one example, filtering is performed based on a file type that is the subject of a local access operation, in another example, filtering may be performed to return only remote services of the current system user, although it is to be appreciated that other filtering operations may be performed. Once available services are matched **3904**, with or without filtering, the matched services are displayed to a system user at **3906** in a user interface. The user interface permits the user to select from the remote services at **3908**. Selection may include clicking on a visual indicator shown in a computer display (e.g. a check box), other options include links to the service, other visual indicators may be used, including drop down boxes and other html, xml, and human readable computer displayed forms. In one alternative (not shown), if the user does not select a service within a predetermined period of time, the system may cancel the operation entirely, or alternatively select a default remote service automatically. At **3910**, the object of the local access operation is delivered to the remote service.

Configuring Streamlined Devices

According to one aspect, streamlining user interaction with computer content includes improving user interfaces display, permitting configuration of streamlined device ruing operations. Streamlining user interaction may also include providing for the pre-configuration of a streamlined device with content customized to a particular user.

In one embodiment, a potential user may purchase a streamlined device on-line. During an order process, the user may establish an interactive session with an order management system. the order management system may be operatively connected to device management systems, including for example remote storage space, remote profiles, among other information. The order management system is configured to retrieve information on the potential user during a purchase session. The potential user is asked for permission to retrieve information from the computer system on which they are order from. The interactive session may also inquire if the user is ordering from home (and thus their home computer), or form another location. In response to granting permission, an executable object is downloaded to the potential user's home computer. The executable object may be encoded use any language, the specific coding language/environment is not important rather the operations performed by execution of the object on computer hardware is.

The executable object mines the home computer of the potential user for web usage information. Web usage information may include for example, browser history (IE and FireFox), favorites, stored accounts, bookmarks, access frequency information. The web usage information is retrieved from the home computer and processed either by the order management system or a streamlined device management system to generate visual representations associated with mappings to computer content. The content that is mapped to, is determined for example, be determined the most frequently accessed site for the potential user. In one embodiment, web cards are generated for the potential user. Each web card is pre-loaded on the device that will be shipped upon completion of the order. Further, for the web cards capable of being display as a channel card—both types may be pre-loaded. Other specialized cards may be generated and pre-loaded for the user based off of information obtained from their home computer. For example a bookmark card is generated from the retrieved bookmarks—The

retrieved bookmarks may be passed through a filter to remove bookmarks that have not been accessed in for example 6 months. Although other time periods may be used to filter bookmark information. Web cards may also be created from the most frequently access bookmarks.

Additional information may be mined from the potential user's computer. In particular, communication settings for the home computer may be detected. Any wireless communication setting may be retrieved and preconfigured. After pre-configuration the streamlined device may be considered fully operations out-of-the-box.

The interactive session may also be used to supplement any retrieved data, for example, if the executable object detects frequent access to third party providers—Flickr and Google Docs for example but cannot detect account name and other access information, the interactive session may query the user to provide the required information.

In other embodiments, the user may be sent executable code via an e-mail during or after a purchase. For example, a user not on his/her own computer during the ordering process may be sent an e-mail containing an executable file, to be run when the user is on their home computer. In another example, a party may purchase a streamlined device for another. The purchaser may provide an e-mail address for the intended recipient, who may execute the file to transmit customization information for the streamlined device.

According to one embodiment an example process, **4000**, FIG. **40**, for pre-configuring a streamlined device is shown. Process **4000**, beings at **4002** in response to a request to purchase a streamlined device. The request is accepted at **4002**, and in response a management system requests permission to perform a data mining operation on a recipients computer. Typically the person/entitiy ordering the streamlined device is the same as the recipient, in which case an executable file can be transmitted at the same time a online request to purchase a streamlined device occurs. In one alternative, the request may be entered offline. During an offline request an e-mail address may be requested and the executable file deliver to the recipient's email, notifying him/her of the file and it use to pre-configure their computer. In another alternative, the party ordering the streamlined device intends it for another. When the purchaser and recipient are different, the e-mail address is requested for the intended recipient. At **4006** (YES), permission is obtained and the executable file retrieves information associated with online use of the recipient's computer at **4008**. Additional information may be collected including configuration options on the recipient's computer. System settings such as network communication configurations may also be retrieved. In one example, wireless network data is retrieve to permit the streamlined device to connect immediately to a recipient's home network.

During an order for a streamlined device, demographic information is collected on the recipient at **4010**. This often includes at a minimum a name and destination address for a recipient of a streamlined device. Thus even if permission is not granted **4006**(NO) information can be collected to pre-configured a streamlined device at **4010**, in this case the information is constrained to what is provider by the purchaser during the transaction. At **4012**, accumulated information is used to pre-configure the streamlined device. Pre-configuration includes establishing wireless network settings for the streamlined device, and may include generating visual representations of online content that are mapped to for example the most frequently accessed sites on the recipient's home computer. Other configuration can include generating visual representations that map to services configured on the recipient's computer (online banking, photo management services, file sharing services, media management services, e-mail providers, etc.). The visual representations may be configured with access information including user names and passwords so that a recipient can switch over the streamlined device seamlessly.

Special Purpose Computer

FIG. **51** shows a block diagram of a computer system **5100** in which various aspects of the present invention may be practiced. For example, various aspects of the invention may be implemented as specialized software executing in one or more computer systems including multiple computer systems communicating over network. Computer system **5100** may include a processor **5106** connected to one or more memory devices **5110**, for storing data. Typically computer system **5100** is implemented without hard drive devices. Memory **5110** is typically used for storing programs and data during operation of the computer system **5100**, and typically comprises Flash memory. Components of computer system **5100** may be coupled by an interconnection mechanism **5108**, which may include one or more busses (e.g., between components that are integrated within a same machine) and/or a network (e.g., between components that reside on separate discrete machines). The interconnection mechanism enables communications (e.g., data, instructions) to be exchanged between system components of system **5100**.

Computer system **5100** may also include one or more input **5104**/output (I/O) devices **5102**, for example, a keyboard, mouse, trackball, microphone, touch screen, a printing device, display screen, speaker, etc. Output devices may include video cards and separate video memory for improved processing performance. Storage **5112**, typically includes a computer readable and writeable nonvolatile recording medium in which signals are stored that define a program to be executed by the processor or information stored on or in the medium to be processed by the program. The medium may, for example, be a flash memory. Typically, in operation, the processor causes data to be read from the nonvolatile recording medium into another memory that allows for faster access to the information by the processor than does the medium. This memory is typically a volatile, random access memory such as a dynamic random access memory (DRAM) or static memory (SRAM).

Referring again to FIG. **51**, the memory may be located in storage **5112** as shown, or in memory system **5110**. The processor **5106** generally manipulates the data within the memory **5110**, and then copies the data to the medium associated with storage **5112** after processing is completed. A variety of mechanisms are known for managing data movement between the medium and integrated circuit memory element and the invention is not limited thereto. The invention is not limited to a particular memory system or storage system.

The computer system may include specially-programmed, special-purpose hardware, for example, an application-specific integrated circuit (ASIC). Aspects of the invention may be implemented in software executing on hardware, hardware or firmware, or any combination thereof. Further, such methods, acts, systems, system elements and components thereof may be implemented as part of the computer system described above or as an independent component.

Although computer system **5100** is shown by way of example as one type of computer system upon which various aspects of the invention may be practiced, it should be

appreciated that aspects of the invention are not limited to being implemented on the computer system as shown in FIG. **51**. Various aspects of the invention may be practiced on one or more computers having a different architectures or components that that shown in FIG. **51**.

Computer system **5100** may programmable using a high-level computer programming language. Computer system **5100** may be also implemented using specially programmed, special purpose hardware. In computer system **5100**, processor **5106** is typically a commercially available processor such as the well-known Pentium class processor available from the Intel Corporation. Many other processors are available, including multi-core processors. Such a processor usually executes an operating system which may be, for example, the Windows-based operating systems (e.g., Windows Vista, Windows NT, Windows 2000 (Windows ME), Windows XP operating systems) available from the Microsoft Corporation, MAC OS System X operating system available from Apple Computer, one or more of the Linux-based operating system distributions (e.g., the Enterprise Linux operating system available from Red Hat Inc.), the Solaris operating system available from Sun Microsystems, or UNIX operating systems available from various sources. Many other operating systems may be used, and the invention is not limited to any particular operating system.

The processor and operating system together define a computer platform for which application programs in high-level programming languages are written. It should be understood that the invention is not limited to a particular computer system platform, processor, operating system, or network. Also, it should be apparent to those skilled in the art that the present invention is not limited to a specific programming language or computer system. Further, it should be appreciated that other appropriate programming languages and other appropriate computer systems could also be used.

One or more portions of the computer system may be distributed across one or more computer systems coupled to a communications network. For example, various aspects of the invention may be distributed among one or more computer systems (e.g., servers) configured to provide a service to one or more client computers, or to perform an overall task as part of a distributed system. For example, various aspects of the invention may be performed on a client-server or multi-tier system that includes components distributed among one or more server systems that perform various functions according to various embodiments of the invention. In one embodiment, the Litl cloud is maintained on server systems accessible from a plurality of devices. These components may be executable, intermediate (e.g., IL) or interpreted (e.g., Java) code which communicate over a communication network (e.g., the Internet) using a communication protocol (e.g., TCP/IP).

It should be appreciated that the invention is not limited to executing on any particular system or group of systems. Also, it should be appreciated that the invention is not limited to any particular distributed architecture, network, or communication protocol.

Physical Configurations

Referring to FIG. **52**C, when the portable computer **100** is in the easel mode, the base is disposed at an angle **134** to the display component. This angle **134** is adjustable, for example, to allow a comfortable viewing angle to the display screen to be maintained for different positions of a user **136** and of the portable computer **100**, as illustrated in FIGS. **52**A, **52**B and **52**C. For example, when the user **136** is further from the portable computer, the angle **134***a* (FIG. **52**A) may be made smaller than the angle **134***b* when the user is closer to the portable computer (FIG. **52**B). As discussed above, in one example, the orientation sensor (not shown) may be used to detect, either approximately or precisely, the angle **134** and to provide the information to the computer operating system.

Referring to FIGS. **53**A and **53**B, there is illustrated a portion of the portable computer **100** illustrating a hinge assembly **138** that allows the portable computer to be configured into either the laptop mode (FIG. **53**A) or the easel mode (FIG. **53**B), according to aspects of the invention. According to one embodiment, the hinge assembly **138** accommodates 0-320 degrees of rotation, allowing a minimum angle **134** (see e.g. FIG. **52**C) of 40 degrees. However, it is to be appreciated that the hinge assembly **138** may allow greater or fewer degrees of rotation, provided only that sufficient rotation is allowed so as to configure the portable computer **100** into either the laptop mode or the easel mode. As discussed above, in one embodiment the portable computer **100** includes an orientation sensor (not shown) that is configured to detect a relative orientation of the display component **102** and the base component **104**. In one example, the orientation sensor may be an accelerometer incorporated into the base component **104**, as discussed above. Alternatively, the orientation sensor may be incorporated into the hinge assembly **138** and may be used to detect movement of the hinge assembly, and to translate that movement into an information about the relative orientation of the display component **102** and the base component **104** (for example, a size of the angle **134**). It is also to be appreciated that the orientation sensor may include electronic or mechanical components, or a combination thereof. For example, the hinge assembly may be provide with detents that provide an indication of the mode of the portable computer.

As discussed above, and also illustrated in FIGS. **53**A and **53**B, the portable computer may also comprise a scroll wheel **132** that allows a user to adjust, control and/or select various aspects of the portable computer (e.g., wireless capability or speaker volume) or items displayed on the display screen **110**. A housing **160** may contain or support various mechanical and/or electronic components (not shown) that are coupled to the scroll wheel **132** and are configured to convert physical movement of the scroll wheel into electrical signals. These electrical signals may be provided to the central processing unit of the portable computer **100** which processes the electrical signals so as to translate movement of the scroll wheel into control of a selected feature, for example, adjusting the volume of the speaker(s) or selecting a particular item displayed on the display screen.

Having thus described several aspects of at least one embodiment, it is to be appreciated various alterations, modifications, and improvements will readily occur to those skilled in the art. Such alterations, modifications, and improvements are intended to be part of this disclosure and are intended to be within the scope of the invention. Accordingly, the foregoing description and drawings are by way of example only, and the scope of the invention should be determined from proper construction of the appended claims, and their equivalents.

The invention claimed is:

1. A customized user interface to display computer content on a display component of a computer system including a keyboard, the user interface comprising:

at least one processor operatively connected to a memory of the computer system;

a graphical user interface, executing on the at least one processor, configured to display the computer content on the display component of the computer system, the graphical user interface configured to:

display a plurality of views of a plurality of visual representations of computer content, wherein the computer content includes at least one of selectable digital content, selectable computer operations and passive digital content;

an execution component, executing on the at least one processor, configured to:

detect a current computer system configuration from at least a first computer system configuration where the keyboard is operable to receive input from an operator of the computer system to control the computer system and a second computer system configuration where the keyboard is inoperable to receive input from the operator of the computer system to control the computer system;

select one of the plurality of views for display on the computer system in response to the detected current computer system configuration; and

transition the display component to the selected one of the plurality of views.

2. The user interface of claim **1**, wherein in the plurality of views includes a home view configured to organize a plurality of content modes and a channel view configured to organize at least one of a single content mode and two content modes.

3. The user interface of claim **1**, wherein the plurality of views includes a screen saver view configured to organize selected content modes for passive viewing.

4. The user interface of claim **1**, wherein the plurality of views includes a home view organizing a plurality of visual representations of digital content, wherein the home view comprises a header display and a body display, and wherein the header display comprises a lateral frame extending from the left of the display component to the right of the display component, wherein the body display is rendered below the header display in the display component of the computer system.

5. The user interface of claim **4**, wherein the computer system configuration comprises a physical positioning of a computer system display relative to a base of the computer system that includes the keyboard about a longitudinal axis of rotation.

6. The user interface of claim **4**, wherein the graphical user interface is further configured to display a search tool displayed in the header display, wherein the search tool is configured to accept search terms entered by a user and in response to execution, causes the computer system to navigate to a view of a first visual representation of digital content, wherein the digital content includes a search engine, and the search engine presents results for the search terms.

7. The user interface of claim **1**, further comprising a storage component configured to retain a previous view state.

8. The user interface of claim **7**, wherein the execution component is further configured to cause the computer system to transition to a previous view in response to execution of a navigation element by a user.

9. The user interface of claim **7**, further comprising the navigation element displayed in a header display.

10. The user interface of claim **4**, wherein the body display comprises an organization of the plurality of visual representations of computer content rendered on the computer display, and the home view further comprises display pages in response to a display threshold establishing a maximal number of visual representations displayed per display page.

11. The user interface of claim **10**, wherein the home view further comprises an indication of visual representations displayed on adjacent display pages of the home view, wherein the indication is displayed within the body of the home view.

12. The user interface of claim **4**, wherein the graphical user interface is further configured to display a nascent card in the home view, wherein the nascent card is configured to permit generation of additional visual representations of digital content.

13. The user interface of claim **12**, wherein the execution component is further configured to execute a process for creating a visual representation in response to execution of the nascent card, wherein the process for creating a visual representation includes acts of:

transitioning to a quick access view;

generating a mapping to online digital content;

executing the mapping; and

displaying a first view of the mapped digital content.

14. The user interface of claim **1**, wherein the plurality of views includes a quick access view configured to permit user generation of a mapping between digital content and a visual representation.

15. The user interface of claim **1**, wherein the plurality of views includes a channel view including a channel selector that displays a sequence of visual representations.

16. The user interface of claim **15**, wherein the execution component is further configured to transition the computer system to the channel view in response to receiving user input via at least one input device integral to or operatively connected with the computer system.

17. A customized user interface to display computer content on a display component of a computer system including a keyboard, the user interface comprising:

at least one processor operatively coupled to a memory of the computer system;

a graphical user interface, executing on at least one processor, configured to display a plurality of views of a plurality of visual representations of the computer content;

an execution component, executing on the at least one processor, configured to:

identify at least a first computer system configuration where the keyboard is operable to receive input from an operator of the computer system to control the computer system and a second computer system configuration where the keyboard is inoperable to receive input from the operator of the computer system to control the computer system based on sensor input indicating a position of the display component;

select, responsive to the sensor input, a first content view from the plurality of views for the first computer system configuration;

transition, automatically in response to the sensor input, the display component between at least the first content view of the plurality of views and a second content view of the plurality of views;

receive user input via at least one input device integral to or operatively connected with the computer system; and

transition, automatically in response to receiving the user input, the display component from one of the first content view and the second content view to a

channel view including a channel selector that displays a sequence of visual representations.

18. The user interface of claim **17**, wherein the at least one input device includes at least one of a scroll wheel, a touchpad, and a mouse.

19. The user interface of claim **1**, wherein the first mode is a laptop mode where the keyboard is oriented to be accessible to the operator and wherein the second mode is an easel mode or a frame mode where the keyboard is oriented to be inaccessible to the operator.

20. A customized user interface to display computer content on a display component of a computer system including a keyboard, the user interface comprising:

at least one processor operatively connected to a memory of the computer system;

a graphical user interface, executing on the at least one processor, configured to display the computer content on the display component of the computer system, the graphical user interface configured to:

display a plurality of views of a plurality of visual representations of computer content, wherein the computer content includes at least one of selectable digital content, selectable computer operations and passive digital content;

an execution component, executing on the at least one processor, configured to:

detect a current computer system configuration from at least a first computer system configuration where the keyboard is positioned to receive input from an operator of the computer system and a second computer system configuration where the keyboard is not positioned to receive input from the operator of the computer system;

select one of the plurality of views for display on the computer system in response to the detected current computer system configuration; and

transition the display component to the selected one of the plurality of views.

* * * * *

UNITED STATES PATENT AND TRADEMARK OFFICE

CERTIFICATE OF CORRECTION

PATENT NO. : 9,880,715 B2
APPLICATION NO. : 14/680422
DATED : January 30, 2018
INVENTOR(S) : Yves Behar et al.

It is certified that error appears in the above-identified patent and that said Letters Patent is hereby corrected as shown below:

On the Title Page

At Item (72) Inventors: "Noah Bruce Guyot, Mill Valey, CA (US)" should read ""Noah Bruce Guyot, Mill Valley, CA (US)".

At Item (72) Inventors: "Chris Bambacus, Framington, MA (US)" should read ""Chris Bambacus, Framingham, MA (US)".

Signed and Sealed this
First Day of May, 2018

Andrei Iancu

Andrei Iancu
Director of the United States Patent and Trademark Office

US009880715C1

(12) **EX PARTE REEXAMINATION CERTIFICATE** (12207th)

United States Patent

Behar et al.

(10) **Number: US 9,880,715 C1**

(45) **Certificate Issued: *Jan. 19, 2023**

(54) **SYSTEM AND METHOD FOR STREAMLINING USER INTERACTION WITH ELECTRONIC CONTENT**

(71) Applicant: **LiTL LLC**, Boston, MA (US)

(72) Inventors: **Yves Behar**, Oakland, CA (US); **Joshua Morenstein**, San Francisco, CA (US); **Christopher Hibmacronan**, Oakland, CA (US); **Naoya Edahiro**, San Francisco, CA (US); **Matthew David Day**, San Francisco, CA (US); **Robert Sanford Havoc Pennington**, Asheville, NC (US); **Noah Bruce Guyot**, Mill Valey, CA (US); **Daniel Kuo**, San Francisco, CA (US); **Jenea Boshart Hayes**, Castro Valley, CA (US); **Aaron Tang**, Somerville, MA (US); **Donald Francis Fischer**, Charlestown, MA (US); **Christian Marc Schmidt**, Brooklyn, NY (US); **Lisa Strausfeld**, New York, NY (US); **David Livingstone Fore**, Oakland, CA (US); **John H. Chuang**, Brookline, MA (US); **Chris Bambacus**, Framington, MA (US); **Bart Haney**, Boston, MA (US); **Logan Ray**, Boston, MA (US); **Serge Beaulieu**, San Francisco, CA (US)

(73) Assignee: **LITL LLC**, Boston, MA (US)

Reexamination Request:
No. 90/014,958, Feb. 16, 2022

Reexamination Certificate for:

Patent No.:	**9,880,715**
Issued:	**Jan. 30, 2018**
Appl. No.:	**14/680,422**
Filed:	**Apr. 7, 2015**

Certificate of Correction issued May 1, 2018

(*) Notice: This patent is subject to a terminal disclaimer.

Related U.S. Application Data

(63) Continuation of application No. 12/416,496, filed on Apr. 1, 2009, now Pat. No. 9,003,315, which is a (Continued)

(51) **Int. Cl.**
G06F 3/0484 (2022.01)
G06F 16/957 (2019.01)
(Continued)

(52) **U.S. Cl.**
CPC ***G06F 3/0484*** (2013.01); ***G06F 1/162*** (2013.01); ***G06F 1/169*** (2013.01); ***G06F 1/1632*** (2013.01);
(Continued)

(58) **Field of Classification Search**
None
See application file for complete search history.

(56) **References Cited**

To view the complete listing of prior art documents cited during the proceeding for Reexamination Control Number 90/014,958, please refer to the USPTO's Patent Electronic System.

Primary Examiner — Rachna S Desai

(57) **ABSTRACT**

Various aspects and embodiments are directed to a graphical user interface that organizes interface elements into views of computer content for presentation to a user. Different views of are used to provide an interface that is responsive to configurations of the device and activities performed by the user. Aspects include permitting the user to transition the device from one configuration to another during its use. The elements that comprise the graphical user interface are configured to present a summarized view of available actions and content to simplify user interaction. The different views present different organizations of the interface elements and in some examples display only certain modes of content in order to reduce the number of options a user must navigate. Methods and systems for streamlining user interaction with computer content are also provided. Stream-
(Continued)

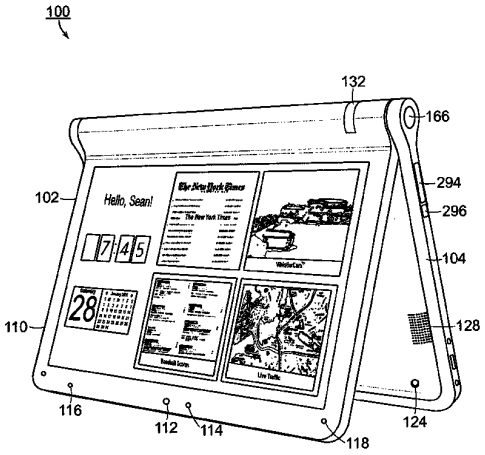

lining includes, for example, pre-configuring a user device based on received information.

Related U.S. Application Data

continuation-in-part of application No. 12/170,951, filed on Jul. 10, 2008, now Pat. No. 8,624,844, which is a continuation-in-part of application No. 12/170,939, filed on Jul. 10, 2008, now Pat. No. 8,289,688.

(60) Provisional application No. 61/041,365, filed on Apr. 1, 2008.

(51) **Int. Cl.**

G06F 1/16	(2006.01)
G06F 3/0362	(2013.01)
H04L 67/02	(2022.01)
H04L 67/10	(2022.01)

(52) **U.S. Cl.**

CPC ***G06F 1/1677*** (2013.01); ***G06F 3/0362*** (2013.01); ***G06F 16/9577*** (2019.01); ***H04L 67/02*** (2013.01); ***H04L 67/10*** (2013.01)

EX PARTE REEXAMINATION CERTIFICATE

NO AMENDMENTS HAVE BEEN MADE TO THE PATENT

AS A RESULT OF REEXAMINATION, IT HAS BEEN DETERMINED THAT:

The patentability of claims **1-20** is confirmed.

* * * * *

EXHIBIT G

US010564818B2

(12) **United States Patent**
Behar et al.

(10) **Patent No.: US 10,564,818 B2**
(45) **Date of Patent: *Feb. 18, 2020**

(54) **SYSTEM AND METHOD FOR STREAMLINING USER INTERACTION WITH ELECTRONIC CONTENT**

(71) Applicant: **LiTL LLC**, Boston, MA (US)

(72) Inventors: **Yves Behar**, Oakland, CA (US); **Joshua Morenstein**, San Francisco, CA (US); **Christopher Hibmacronan**, Oakland, CA (US); **Naoya Edahiro**, San Francisco, CA (US); **Matthew David Day**, San Francisco, CA (US); **Robert Sanford Havoc Pennington**, Asheville, NC (US); **Noah Bruce Guyot**, Mill Valley, CA (US); **Daniel Kuo**, San Francisco, CA (US); **Jenea Boshart Hayes**, Castro Valley, CA (US); **Aaron Tang**, Boston, MA (US); **Donald Francis Fischer**, Charlestown, MA (US); **Christian Marc Schmidt**, Brooklyn, NY (US); **Lisa Strausfeld**, New York, NY (US); **David Livingstone Fore**, Oakland, CA (US); **John Chuang**, Brookline, MA (US); **Chris Bambacus**, Framingham, MA (US); **Bart Haney**, Boston, MA (US); **Logan Ray**, Boston, MA (US); **Serge Beaulieu**, San Francisco, CA (US)

(73) Assignee: **LiTL LLC**, Boston, MA (US)

(*) Notice: Subject to any disclaimer, the term of this patent is extended or adjusted under 35 U.S.C. 154(b) by 85 days.

This patent is subject to a terminal disclaimer.

(21) Appl. No.: **15/858,955**

(22) Filed: **Dec. 29, 2017**

(65) **Prior Publication Data**

US 2018/0181271 A1 Jun. 28, 2018

Related U.S. Application Data

(63) Continuation of application No. 14/680,422, filed on Apr. 7, 2015, now Pat. No. 9,880,715, which is a

(Continued)

(51) **Int. Cl.**
G06F 3/048 (2013.01)
G06F 3/0484 (2013.01)

(Continued)

(52) **U.S. Cl.**
CPC ***G06F 3/0484*** (2013.01); ***G06F 1/162*** (2013.01); ***G06F 1/169*** (2013.01); ***G06F 1/1632*** (2013.01);

(Continued)

(58) **Field of Classification Search**
None
See application file for complete search history.

(56) **References Cited**

U.S. PATENT DOCUMENTS

3,468,576 A 9/1969 Beyer et al.
4,939,514 A 7/1990 Miyazaki

(Continued)

FOREIGN PATENT DOCUMENTS

CN 1292112 A 4/2001
CN 1926496 A 3/2007

(Continued)

OTHER PUBLICATIONS

European Examination Report dated Nov. 22, 2016 in connection with European Application No. 09727165.4.

(Continued)

Primary Examiner — Claudia Dragoescu
(74) *Attorney, Agent, or Firm* — Wolf, Greenfield & Sacks, P.C.

(57) **ABSTRACT**

Various aspects and embodiments are directed to a graphical user interface that organizes interface elements into views of

(Continued)

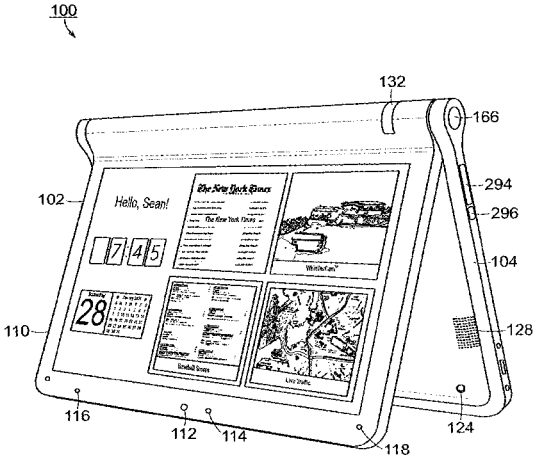

computer content for presentation to a user. Different views of are used to provide an interface that is responsive to configurations of the device and activities performed by the user. Aspects include permitting the user to transition the device from one configuration to another during its use. The elements that comprise the graphical user interface are configured to present a summarized view of available actions and content to simplify user interaction. The different views present different organizations of the interface elements and in some examples display only certain modes of content in order to reduce the number of options a user must navigate. Methods and systems for streamlining user interaction with computer content are also provided. Streamlining includes, for example, pre-configuring a user device based on received information.

20 Claims, 56 Drawing Sheets

Related U.S. Application Data

continuation of application No. 12/416,496, filed on Apr. 1, 2009, now Pat. No. 9,003,315, which is a continuation-in-part of application No. 12/170,939, filed on Jul. 10, 2008, now Pat. No. 8,289,688, and a continuation-in-part of application No. 12/170,951, filed on Jul. 10, 2008, now Pat. No. 8,624,844.

(60) Provisional application No. 61/041,365, filed on Apr. 1, 2008.

(51) **Int. Cl.**

G06F 16/957	(2019.01)
G06F 1/16	(2006.01)
G06F 3/0362	(2013.01)
H04L 29/08	(2006.01)

(52) **U.S. Cl.**

CPC ***G06F 1/1677*** (2013.01); ***G06F 3/0362*** (2013.01); ***G06F 16/9577*** (2019.01); ***H04L 67/02*** (2013.01); ***H04L 67/10*** (2013.01)

(56) **References Cited**

U.S. PATENT DOCUMENTS

D333,636	S	3/1993	Issa
5,200,913	A	4/1993	Hawkins et al.
5,268,817	A	12/1993	Miyagawa et al.
5,436,954	A	7/1995	Nishiyama et al.
5,515,345	A	5/1996	Barreira et al.
5,547,698	A	8/1996	Lansbergen et al.
5,661,632	A	8/1997	Register
5,708,561	A	1/1998	Huilgol et al.
5,712,760	A	1/1998	Coulon et al.
D391,927	S	3/1998	Faranda et al.
D392,944	S	3/1998	Issa
D395,868	S	7/1998	Lino
5,790,371	A	8/1998	Latocha et al.
5,793,355	A	8/1998	Youens
5,796,575	A	8/1998	Podwalny et al.
D399,526	S	10/1998	Brady
5,825,352	A	10/1998	Bisset et al.
5,841,631	A	11/1998	Shin et al.
5,847,698	A	12/1998	Reavey et al.
5,900,848	A	5/1999	Haneda et al.
5,926,364	A	7/1999	Karidis
5,949,643	A	9/1999	Batio
D416,003	S	11/1999	Schiefer et al.
5,987,704	A	11/1999	Tang
6,005,767	A	12/1999	Ku et al.
6,067,224	A	5/2000	Nobuchi
6,094,191	A	7/2000	Watanabe et al.
6,097,389	A	8/2000	Morris et al.
6,137,468	A	10/2000	Martinez
6,144,358	A	11/2000	Narayanaswamy et al.
6,154,359	A	11/2000	Kamikakai et al.
6,222,507	B1	4/2001	Gouko
6,223,393	B1	5/2001	Knopf
6,262,885	B1	7/2001	Emma et al.
6,266,236	B1	7/2001	Ku et al.
6,275,376	B1	8/2001	Moon
6,295,038	B1	9/2001	Rebeske
6,302,612	B1	10/2001	Fowler et al.
6,323,846	B1	11/2001	Westerman et al.
D452,238	S	12/2001	Sugano et al.
6,327,482	B1	12/2001	Miyashita
6,341,061	B1	1/2002	Eisbach et al.
6,343,006	B1	1/2002	Moscovitch et al.
6,377,444	B1	4/2002	Price et al.
D462,069	S	8/2002	Gatto
6,437,974	B1	8/2002	Liu
D463,797	S	10/2002	Andre et al.
6,464,195	B1	10/2002	Hildebrandt
6,492,974	B1	12/2002	Nobuchi et al.
6,493,216	B1	12/2002	Lin
6,510,049	B2	1/2003	Rosen
D476,326	S	6/2003	Taniumura
6,597,384	B1	7/2003	Harrison
D479,708	S	9/2003	Hwang et al.
6,628,267	B2	9/2003	Karidis et al.
6,642,909	B1	11/2003	Oliva
6,659,516	B2	12/2003	Wang et al.
6,661,426	B1	12/2003	Jetha et al.
6,665,175	B1	12/2003	DeBoer et al.
6,693,652	B1	2/2004	Barrus et al.
6,697,055	B1	2/2004	Bullister
D491,177	S	6/2004	Andre et al.
D491,936	S	6/2004	Jao
D494,162	S	8/2004	Kondo
6,771,494	B2	8/2004	Shimano
D495,674	S	9/2004	Yoo et al.
D495,694	S	9/2004	Chase et al.
6,788,527	B2	9/2004	Doczy et al.
6,819,304	B2	11/2004	Branson
6,829,140	B2	12/2004	Shimano et al.
6,859,219	B1	2/2005	Sall
D504,128	S	4/2005	Maskatia
6,882,335	B2	4/2005	Saarinen
6,944,012	B2	9/2005	Doczy et al.
6,963,485	B2	11/2005	Hong
D512,997	S	12/2005	Lee et al.
6,972,752	B2	12/2005	Nako et al.
D513,509	S	1/2006	Kawa
D516,552	S	3/2006	Iseki
D517,541	S	3/2006	Maskatia
D518,042	S	3/2006	Kanayama
7,035,665	B2	4/2006	Kido et al.
D523,429	S	6/2006	Lin
7,061,472	B1	6/2006	Schweizer et al.
7,072,179	B1	7/2006	Curran et al.
D528,541	S	9/2006	Maskatia
D528,993	S	9/2006	Wilson
7,138,962	B2	11/2006	Koenig
7,148,877	B2	12/2006	Chang et al.
D534,531	S	1/2007	Ogasawara
D535,292	S	1/2007	Shi et al.
7,164,432	B1	1/2007	Amemiya
7,187,364	B2	3/2007	Duarte et al.
D544,846	S	6/2007	Kindle et al.
7,239,508	B2	7/2007	Ferrucei
7,250,207	B1	7/2007	Heal et al.
7,366,994	B2	4/2008	Loui
7,382,607	B2	6/2008	Skillman
7,428,142	B1	9/2008	Ligtenberg et al.
7,433,179	B2	10/2008	Hisano et al.
D581,371	S	11/2008	Richmond
7,467,356	B2	12/2008	Gettman et al.
7,522,946	B2	4/2009	Im
D593,085	S	5/2009	Behar et al.

(56) **References Cited**

U.S. PATENT DOCUMENTS

D593,086	S	5/2009	Behar et al.
D593,091	S	5/2009	Behar et al.
D605,635	S	12/2009	Edahiro et al.
7,698,407	B2	4/2010	Mattox, Jr. et al.
7,756,928	B1	7/2010	Meenan et al.
7,814,425	B1	10/2010	O'Shaugnessy et al.
7,869,834	B2	1/2011	Seol et al.
8,289,688	B2	10/2012	Behar et al.
8,300,022	B2	10/2012	Brenneman
8,464,161	B2	6/2013	Giles et al.
8,577,957	B2	11/2013	Behar et al.
8,612,888	B2	12/2013	Pennington et al.
8,624,844	B2	1/2014	Behar et al.
9,003,315	B2	4/2015	Behar et al.
9,495,070	B2	11/2016	Pennington et al.
9,563,229	B2	2/2017	Behar et al.
9,880,715	B2	1/2018	Behar et al.
9,927,835	B2	3/2018	Behar et al.
10,289,154	B2	5/2019	Behar et al.
2001/0032320	A1	10/2001	Abdelnur et al.
2002/0005818	A1	1/2002	Bruzzone
2002/0010707	A1	1/2002	Chang et al.
2002/0021258	A1	2/2002	Koenig
2002/0190947	A1	12/2002	Feinstein
2003/0048595	A1	3/2003	Hsieh et al.
2003/0080995	A1	5/2003	Tenenbaum et al.
2003/0107603	A1	6/2003	Clapper
2003/0109232	A1	6/2003	Park et al.
2004/0001049	A1	1/2004	Oakley
2004/0025993	A1	2/2004	Russell
2004/0185920	A1	9/2004	Choi et al.
2004/0203535	A1	10/2004	Kim et al.
2004/0207568	A1	10/2004	Ooshima et al.
2004/0212602	A1	10/2004	Nako et al.
2004/0228076	A1	11/2004	Clapper
2005/0005241	A1	1/2005	Hunleth et al.
2005/0010860	A1	1/2005	Weiss et al.
2005/0018396	A1	1/2005	Nakajima et al.
2005/0041378	A1	2/2005	Hamada et al.
2005/0063145	A1	3/2005	Homer et al.
2005/0071782	A1	3/2005	Barrett et al.
2005/0083642	A1	4/2005	Senpuku et al.
2005/0091596	A1	4/2005	Anthony et al.
2005/0093868	A1	5/2005	Hinckley
2005/0128695	A1	6/2005	Han
2005/0134717	A1	6/2005	Misawa
2005/0146845	A1	7/2005	Moscovitch
2005/0210399	A1	9/2005	Filner et al.
2005/0221865	A1	10/2005	Nishiyama et al.
2005/0257400	A1	11/2005	Sommerer et al.
2005/0282596	A1	12/2005	Park et al.
2006/0015823	A1	1/2006	Chao et al.
2006/0017692	A1	1/2006	Wehrenberg et al.
2006/0101064	A1	5/2006	Strong et al.
2006/0123353	A1	6/2006	Matthews et al.
2006/0126284	A1	6/2006	Moscovitch
2006/0238439	A1	10/2006	Fuller et al.
2006/0264243	A1	11/2006	Aarras
2006/0268500	A1	11/2006	Kuhn
2006/0271644	A1	11/2006	Yamaizumi et al.
2006/0277167	A1	12/2006	Gross et al.
2007/0024722	A1	2/2007	Eura et al.
2007/0035616	A1	2/2007	Lee et al.
2007/0073833	A1	3/2007	Roy et al.
2007/0120762	A1	5/2007	O'Gorman
2007/0138806	A1	6/2007	Ligtenberg et al.
2007/0178952	A1	8/2007	Ehara et al.
2007/0182663	A1	8/2007	Biech
2007/0240076	A1	10/2007	Astala et al.
2007/0242421	A1	10/2007	Goschin et al.
2007/0247446	A1	10/2007	Orsley et al.
2007/0268202	A1	11/2007	Lim et al.
2007/0296820	A1	12/2007	Lonn
2008/0024388	A1	1/2008	Bruce
2008/0024465	A1	1/2008	Hawkins et al.
2008/0042987	A1	2/2008	Westerman et al.
2008/0059888	A1	3/2008	Dunko
2008/0062625	A1	3/2008	Batio
2008/0074831	A1	3/2008	Lee et al.
2008/0088602	A1	4/2008	Hotelling
2008/0092039	A1	4/2008	Brockway et al.
2008/0122796	A1	5/2008	Jobs et al.
2008/0134093	A1	6/2008	Dharmarajan et al.
2008/0158795	A1	7/2008	Aoki et al.
2008/0174570	A1	7/2008	Jobs et al.
2008/0209493	A1	8/2008	Choi et al.
2008/0235594	A1	9/2008	Bhumkar et al.
2008/0284738	A1	11/2008	Hovden et al.
2009/0007001	A1	1/2009	Morin et al.
2009/0019383	A1	1/2009	Riley et al.
2009/0019479	A1	1/2009	Kwak et al.
2009/0150784	A1	6/2009	Denney et al.
2009/0150826	A1	6/2009	Lyndersay et al.
2009/0160811	A1	6/2009	Motoe et al.
2009/0190295	A1	7/2009	Chin et al.
2009/0193364	A1	7/2009	Jarrett et al.
2009/0244012	A1	10/2009	Behar et al.
2009/0244016	A1	10/2009	Casparian et al.
2009/0244832	A1	10/2009	Behar et al.
2009/0249244	A1	10/2009	Robinson et al.
2009/0275366	A1	11/2009	Schilling
2009/0300511	A1	12/2009	Behar et al.
2009/0303205	A1	12/2009	Seibert
2009/0303676	A1	12/2009	Behar et al.
2009/0322790	A1	12/2009	Behar et al.
2010/0174993	A1	7/2010	Pennington et al.
2013/0141854	A1	6/2013	Behar et al.
2014/0282263	A1	9/2014	Pennington et al.
2015/0277688	A1	10/2015	Behar et al.
2017/0090699	A1	3/2017	Pennington et al.
2017/0205849	A1	7/2017	Behar et al.
2018/0307271	A1	10/2018	Behar et al.

FOREIGN PATENT DOCUMENTS

DE	199 52 486	A1	5/2001
EP	0 588 210	A1	3/1994
EP	1 316 877	A1	6/2003
GB	2 321 982	A	8/1998
JP	5-197507	A	8/1993
JP	6-090200	A	3/1994
JP	6-242853	A	9/1994
JP	6-259166	A	9/1994
JP	8-179851	A	7/1996
JP	10-111658	A	4/1998
JP	11-296259		10/1999
JP	2001-167211	A	6/2001
JP	2004-302179	A	10/2004
JP	2005-159741	A	6/2005
JP	2005-242436	A	9/2005
JP	2006-227409	A	8/2006
KR	1020000036647		6/2002
WO	WO 95/24007	A1	9/1995

OTHER PUBLICATIONS

European Application Office Communication dated Nov. 23, 2015 in connection to European No. 09727165.4.

International Search Report and Written Opinion for International Application No. PCT/US2009/038599 dated Jun. 3, 2009.

European Examination Report dated Jan. 17, 2017 in connection with European Application No. 09755433.1.

Extended European Search Report dated Apr. 5, 2011 in connection with European Application No. 09755433.1.

International Search Report and Written Opinion for International Application No. PCT/US2009/39117 dated Sep. 28, 2009.

International Application Preliminary Report on Patentability dated Oct. 14, 2010 for International No. PCT/US2009/039117.

Canadian Office Action dated Aug. 18, 2017 in connection with Canadian Application No. 2719828.

Chinese Office Action dated Jul. 18, 2013 in connection with Chinese Application No. 200980117859.8.

(56) **References Cited**

OTHER PUBLICATIONS

Japanese Office Action dated Apr. 16, 2013 in connection with Japanese Application No. 2011-503058.
Japanese Office Action dated Dec. 4, 2012 in connection with Japanese Application No. 2011-503058 and partial English translation thereof.
Office Action dated Jun. 7, 2012, for U.S. Appl. No. 12/170,951.
Office Action dated Apr. 4, 2011, for U.S. Appl. No. 12/170,951.
http://laptop.org/en/laptop/start/ebook.shtml accessed on Sep. 29, 2008.
Miller, Creating a Digital Home Entertainment System with Windows Media Center. 2006, Que.
U.S. Appl. No. 16/374,569, filed Apr. 3, 2019, Behar et al.

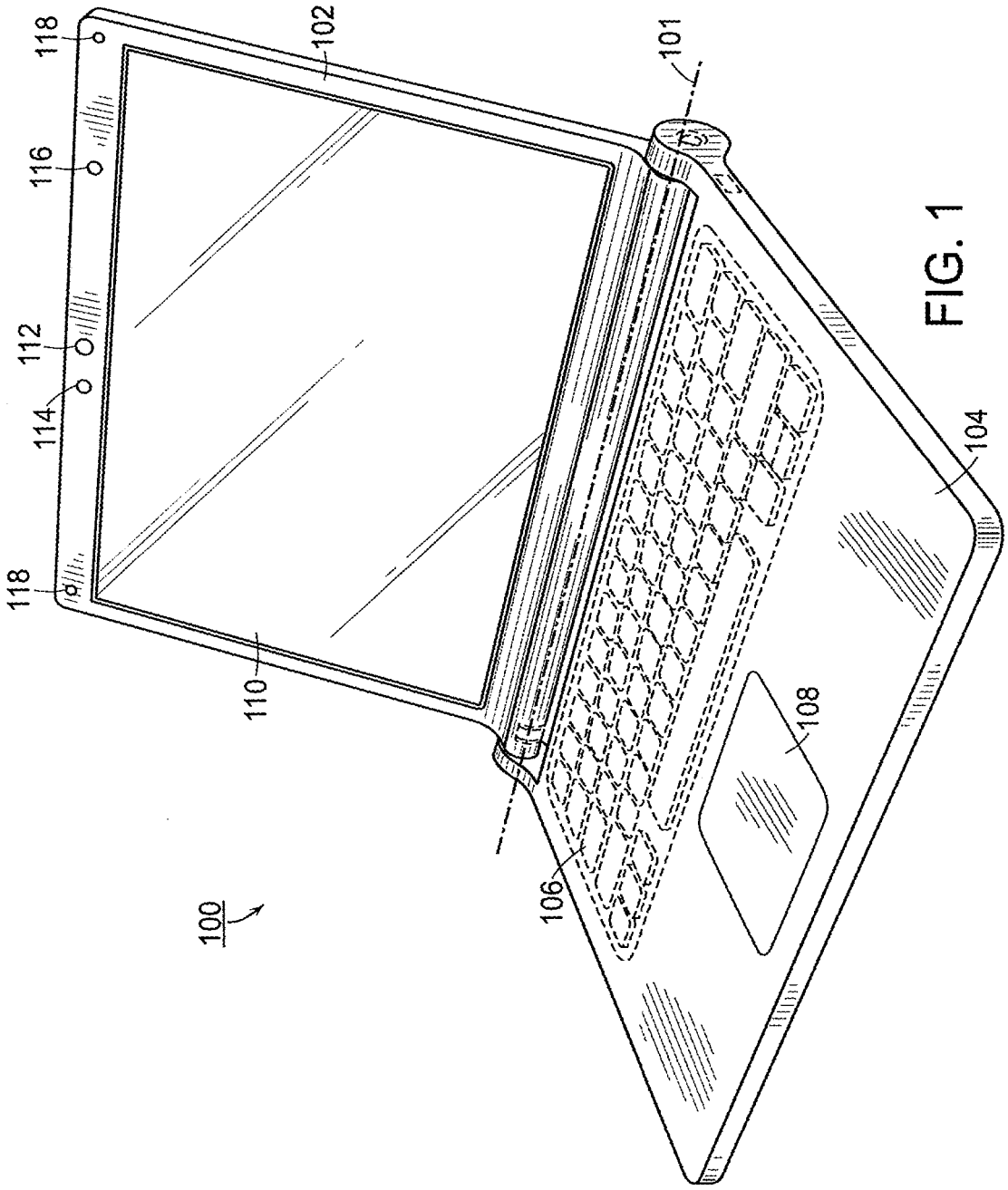

FIG. 1

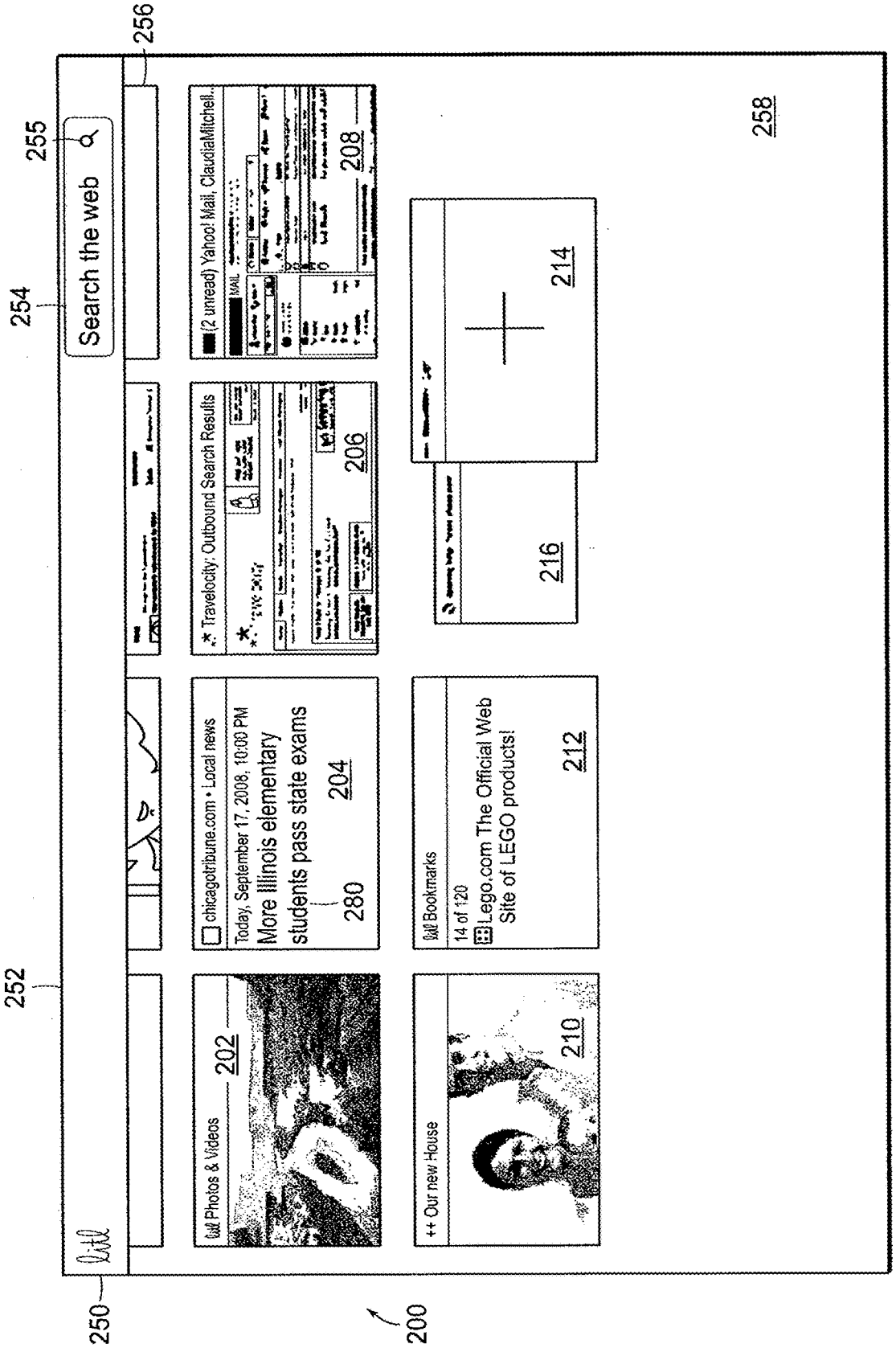
250
252
254
255
256
Search the web
Photos & Videos
202
chicagotribune.com • Local news
Today, September 17, 2008, 10:00 PM
More Illinois elementary students pass state exams
280
204
Travelocity: Outbound Search Results
206
(2 unread) Yahoo! Mail, ClaudiaMitchell...
208
++ Our new House
210
Bookmarks
14 of 120
Lego.com The Official Web Site of LEGO products!
212
214
216
258
200

FIG. 2

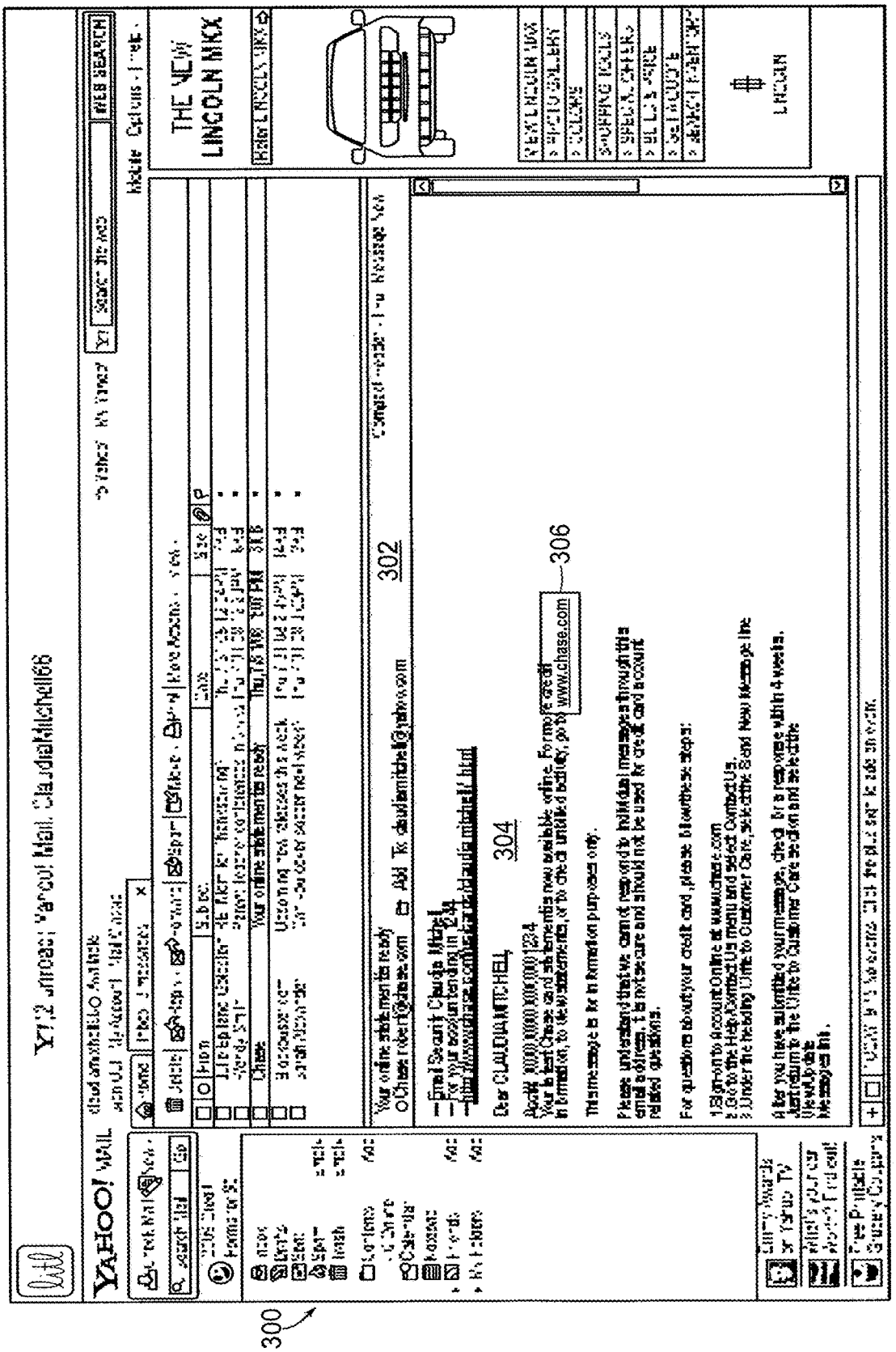

FIG. 3A

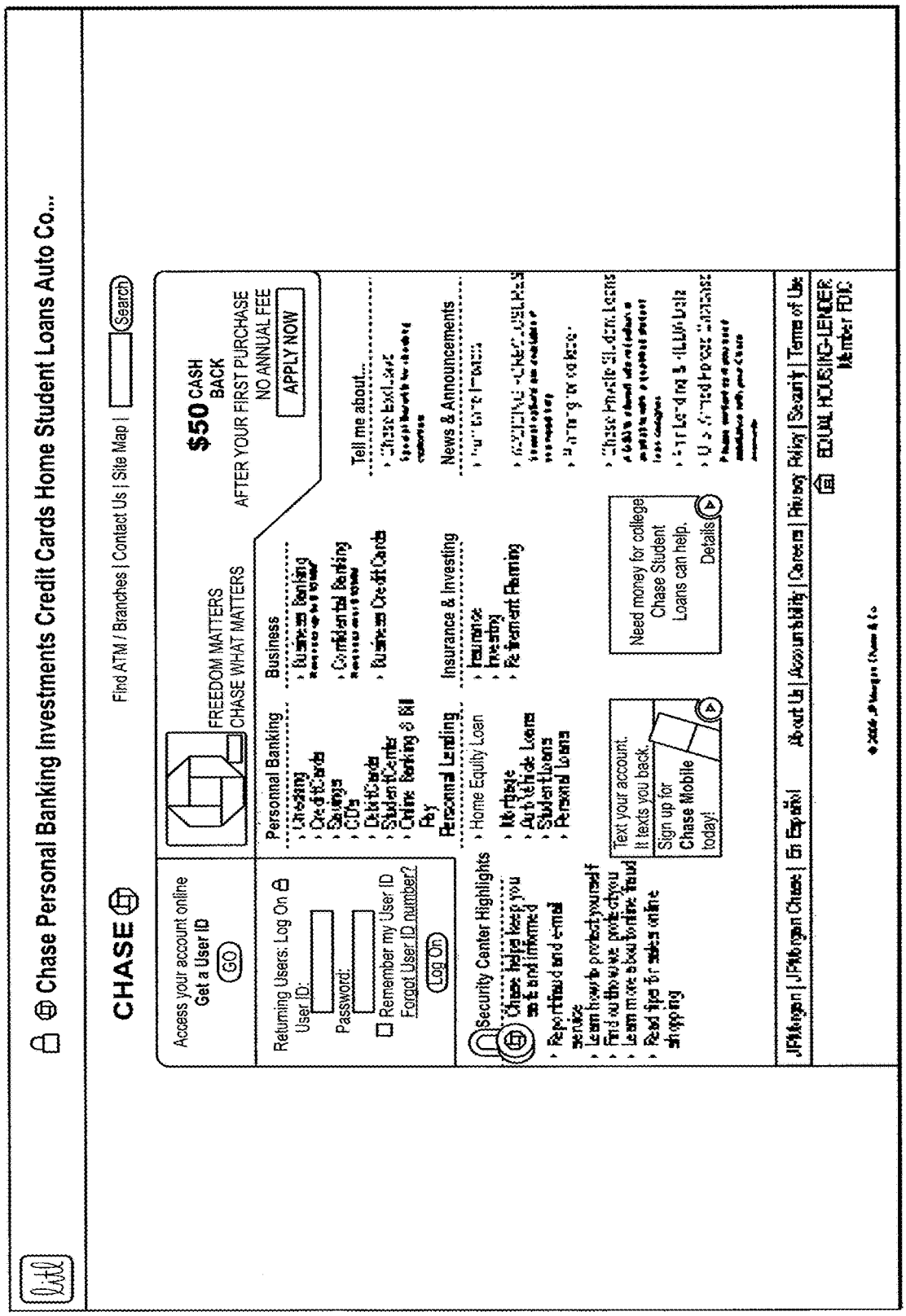
Chase Personal Banking Investments Credit Cards Home Student Loans Auto Co...
CHASE
Find ATM / Branches | Contact Us | Site Map |
Search
Access your account online
Get a User ID
GO
Returning Users: Log On
User ID:
Password:
Remember my User ID
Forgot User ID number?
Log On
FREEDOM MATTERS
CHASE WHAT MATTERS
$50 CASH BACK
AFTER YOUR FIRST PURCHASE
NO ANNUAL FEE
APPLY NOW
Personal Banking
Checking
Credit Cards
Savings
CDs
Debit Cards
Student Center
Chase Banking & Bill Pay
Business
Business Banking
Confidential Banking
Business Credit Cards
Personal Lending
Home Equity Loan
Mortgage
Auto Vehicle Loans
Student Loans
Personal Loans
Insurance & Investing
Insurance
Investing
Retirement Planning
Tell me about...
News & Announcements
Security Center Highlights
Report fraud and e-mail service
Text your account. It texts you back.
Sign up for Chase Mobile today!
Need money for college Chase Student Loans can help.
Details
About Us | Accessibility | Careers | Privacy Policy | Security | Terms of Use
EQUAL HOUSING LENDER
Member FDIC

FIG. 3B

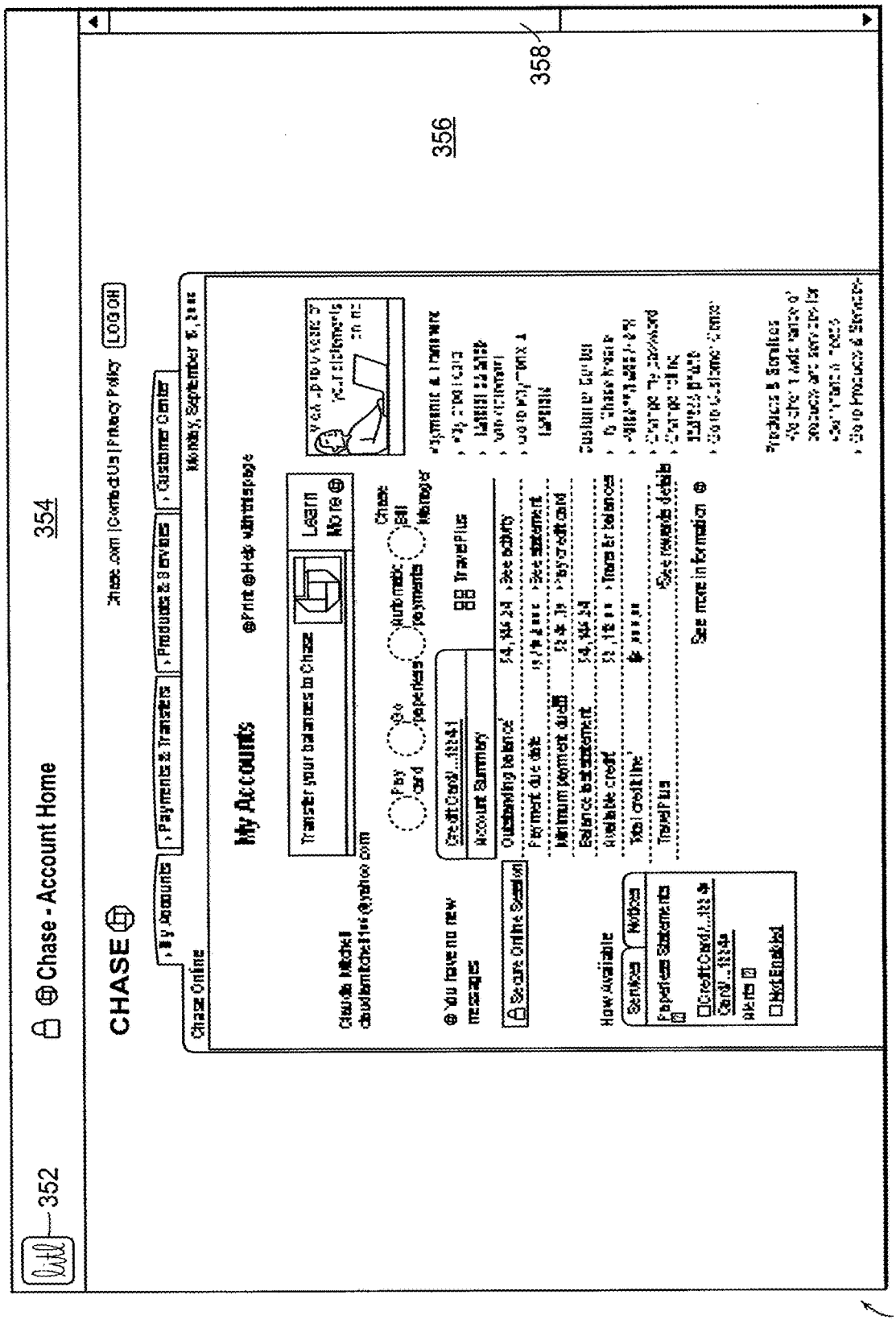
352
Chase - Account Home
354
CHASE
Chase.com | Contact Us | Privacy Policy
LOG OFF
Payments & Transfers
Products & Services
Customer Center
Monday, September 11, 2006
Chase Online
My Accounts
Print
Help
Transfer your balances to Chase
Learn More
Pay Card
Go paperless
Automatic payments
Chase Bill Manager
Credit Card ...1234
Account Summary
Travel Plus
Outstanding balance
See activity
Payment due date
See statement
Minimum payment due
Pay credit card
Balance last statement
Available credit
Transfer balances
Total credit line
Travel Plus
See rewards details
See more information
Secure Online Session
Services
Notices
Paperless Statements
Credit Card ...1234
Alerts
Not Enabled
356
358
350

FIG. 3C

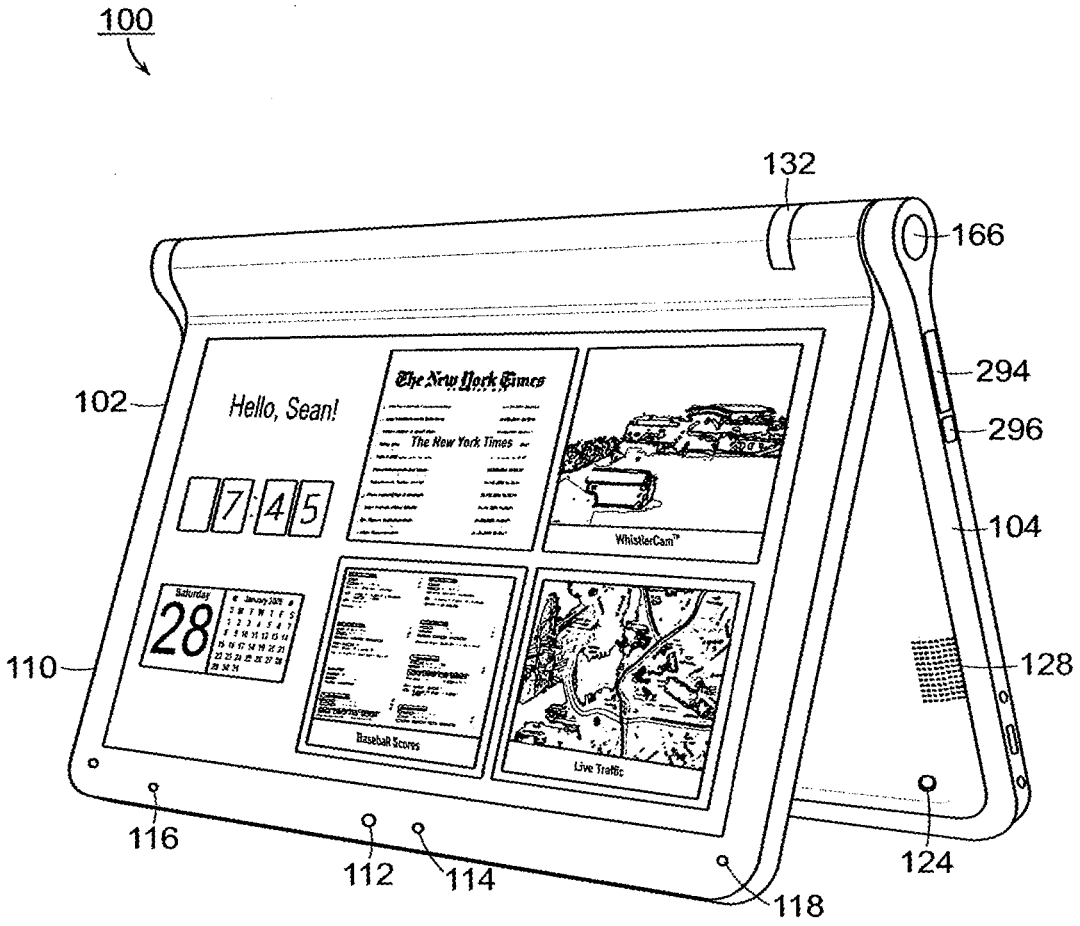
100
132
166
294
296
104
128
102
110
116
112
114
118
124
Hello, Sean!
7:45
The New York Times
WhistlerCam
Baseball Scores
Live Traffic
Saturday
28

FIG. 4

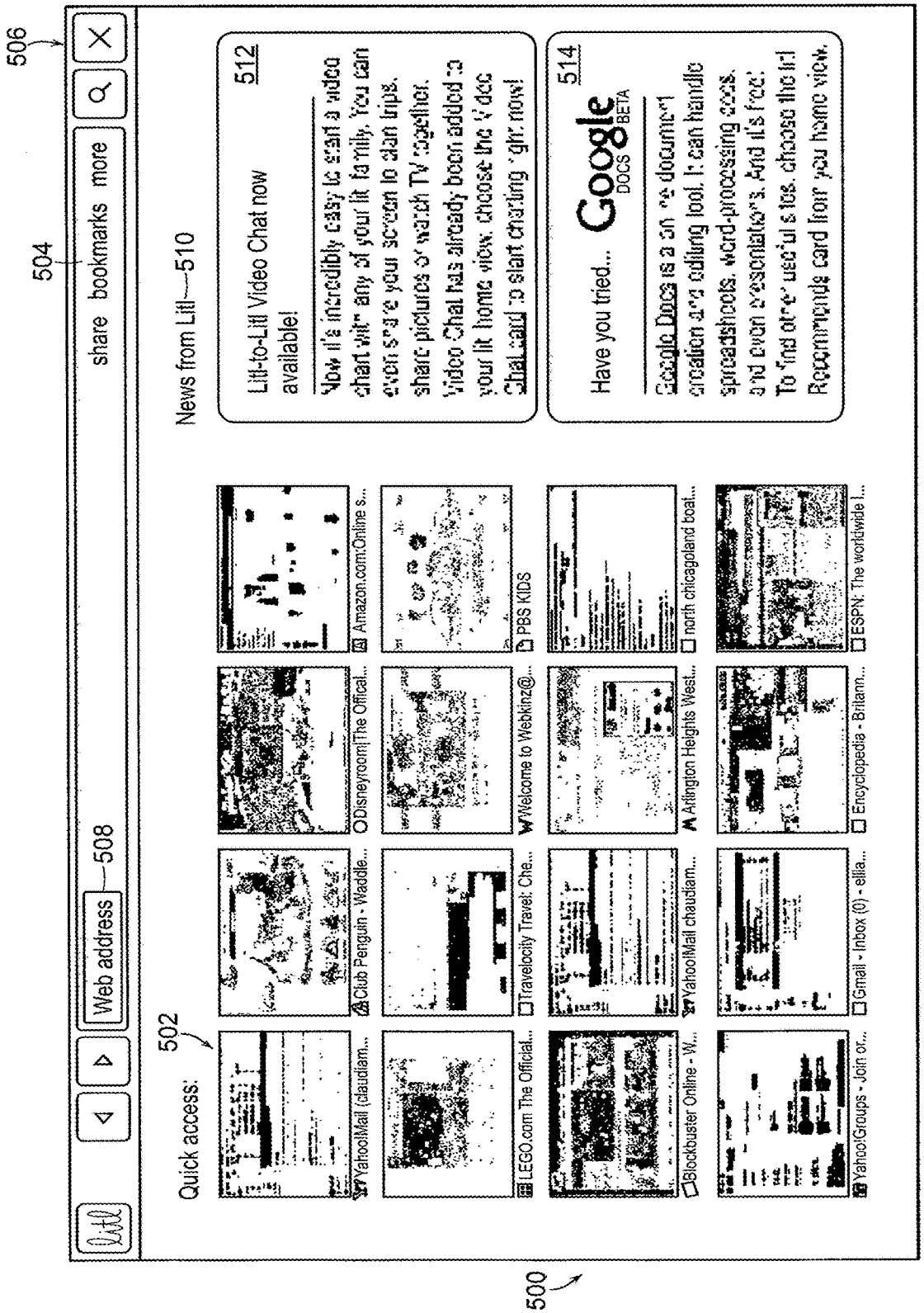
506
504
share bookmarks more
Web address
508
502
Quick access:
News from Lili
510
Lili-to-Lili Video Chat now available!
512
Have you tried...
Google DOCS BETA
514
500

FIG. 5

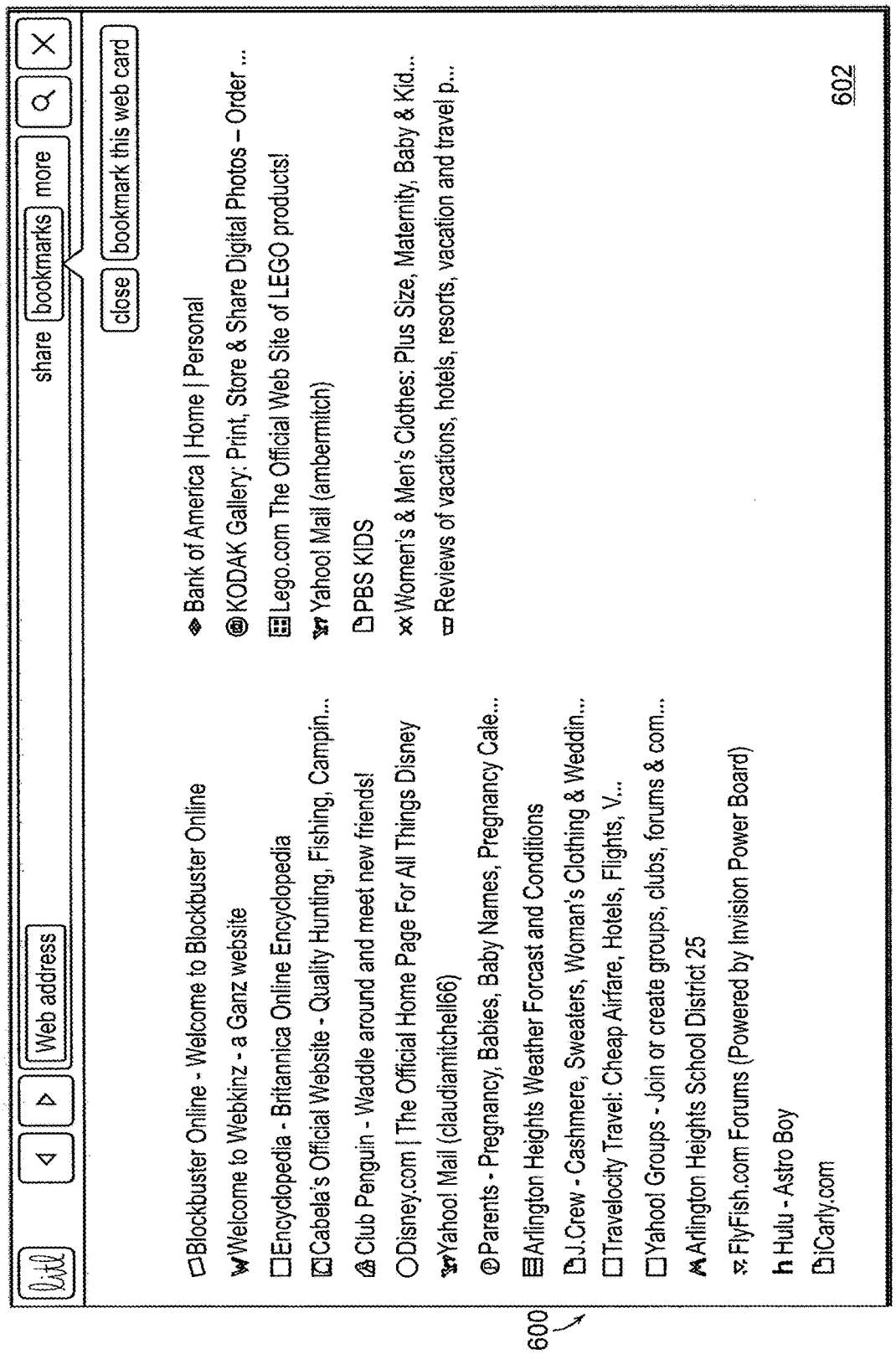
Web address
share
bookmarks
more
close
bookmark this web card
Blockbuster Online - Welcome to Blockbuster Online
Welcome to Webkinz - a Ganz website
Encyclopedia - Britannica Online Encyclopedia
Cabela's Official Website - Quality Hunting, Fishing, Campin...
Club Penguin - Waddle around and meet new friends!
Disney.com | The Official Home Page For All Things Disney
Yahoo! Mail (claudiamitchell66)
Parents - Pregnancy, Babies, Baby Names, Pregnancy Cale...
Arlington Heights Weather Forcast and Conditions
J.Crew - Cashmere, Sweaters, Woman's Clothing & Weddin...
Travelocity Travel: Cheap Airfare, Hotels, Flights, V...
Yahoo! Groups - Join or create groups, clubs, forums & com...
Arlington Heights School District 25
FlyFish.com Forums (Powered by Invision Power Board)
Hulu - Astro Boy
iCarly.com
Bank of America | Home | Personal
KODAK Gallery: Print, Store & Share Digital Photos – Order ...
Lego.com The Official Web Site of LEGO products!
Yahoo! Mail (ambermitch)
PBS KIDS
Women's & Men's Clothes: Plus Size, Maternity, Baby & Kid...
Reviews of vacations, hotels, resorts, vacation and travel p...
600
602

FIG. 6

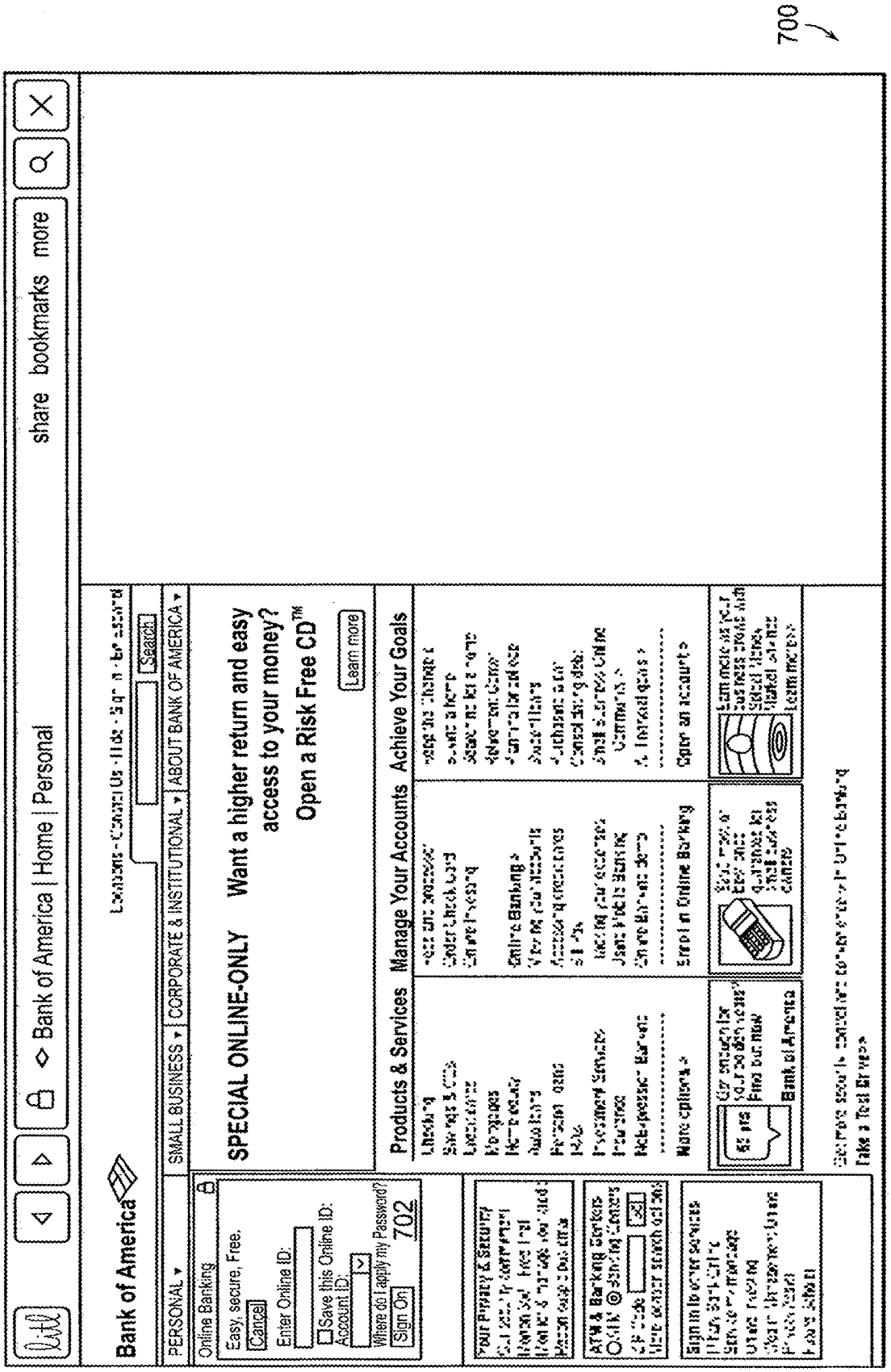
700
Bank of America | Home | Personal
share bookmarks more
Bank of America
PERSONAL
SMALL BUSINESS
CORPORATE & INSTITUTIONAL
ABOUT BANK OF AMERICA
Search
Online Banking
Easy, secure, Free.
Cancel
Enter Online ID:
Save this Online ID:
Account ID:
Where do I apply my Password?
Sign On
702
SPECIAL ONLINE-ONLY
Want a higher return and easy access to your money?
Open a Risk Free CD™
Learn more
Products & Services
Manage Your Accounts
Achieve Your Goals
Online Banking
Open an Account
Bank of America

FIG. 7A

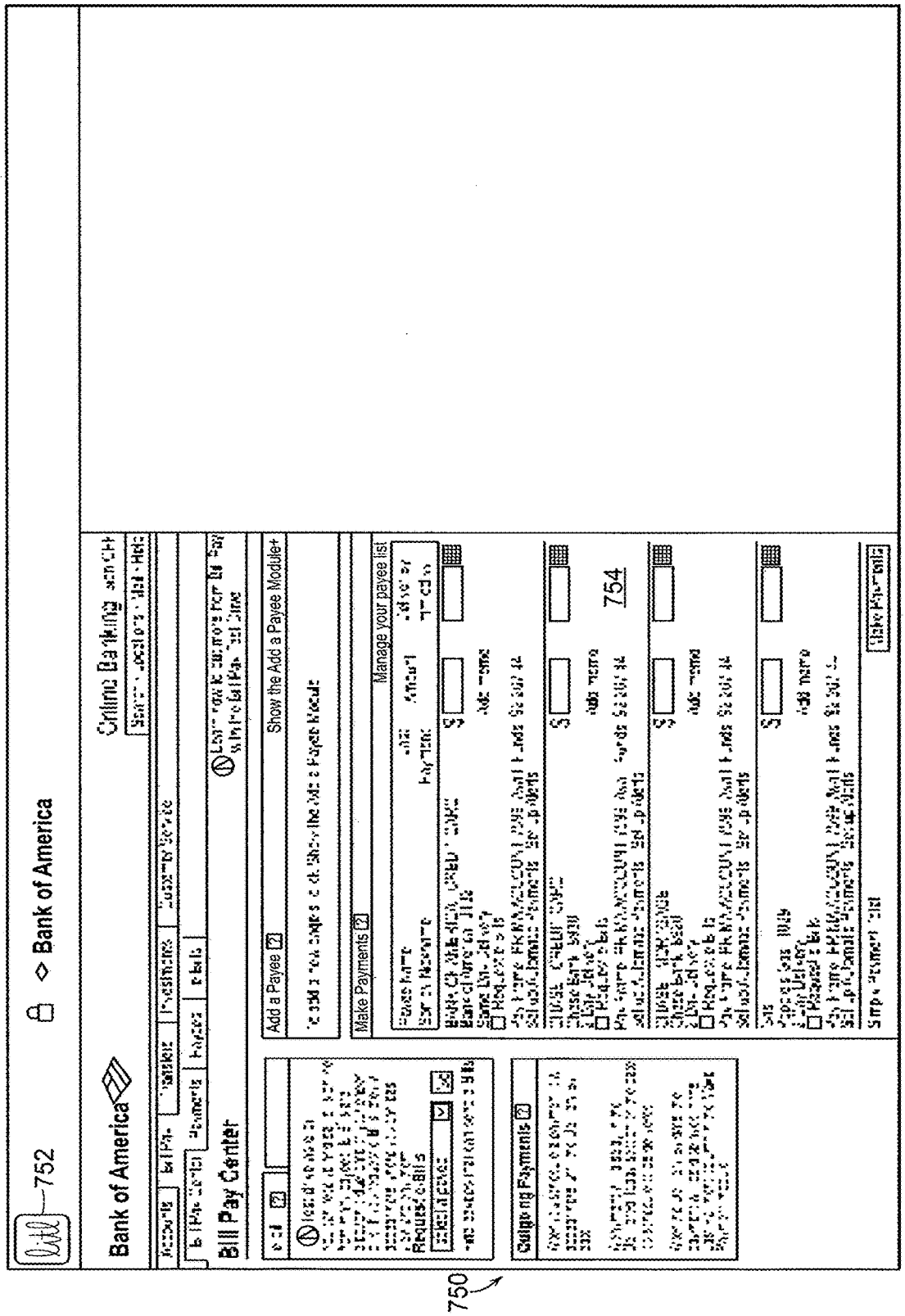
752
Bank of America
Bill Pay Center
Add a Payee
Show the Add a Payee Module
Make Payments
Manage your payee list
754
750

FIG. 7B

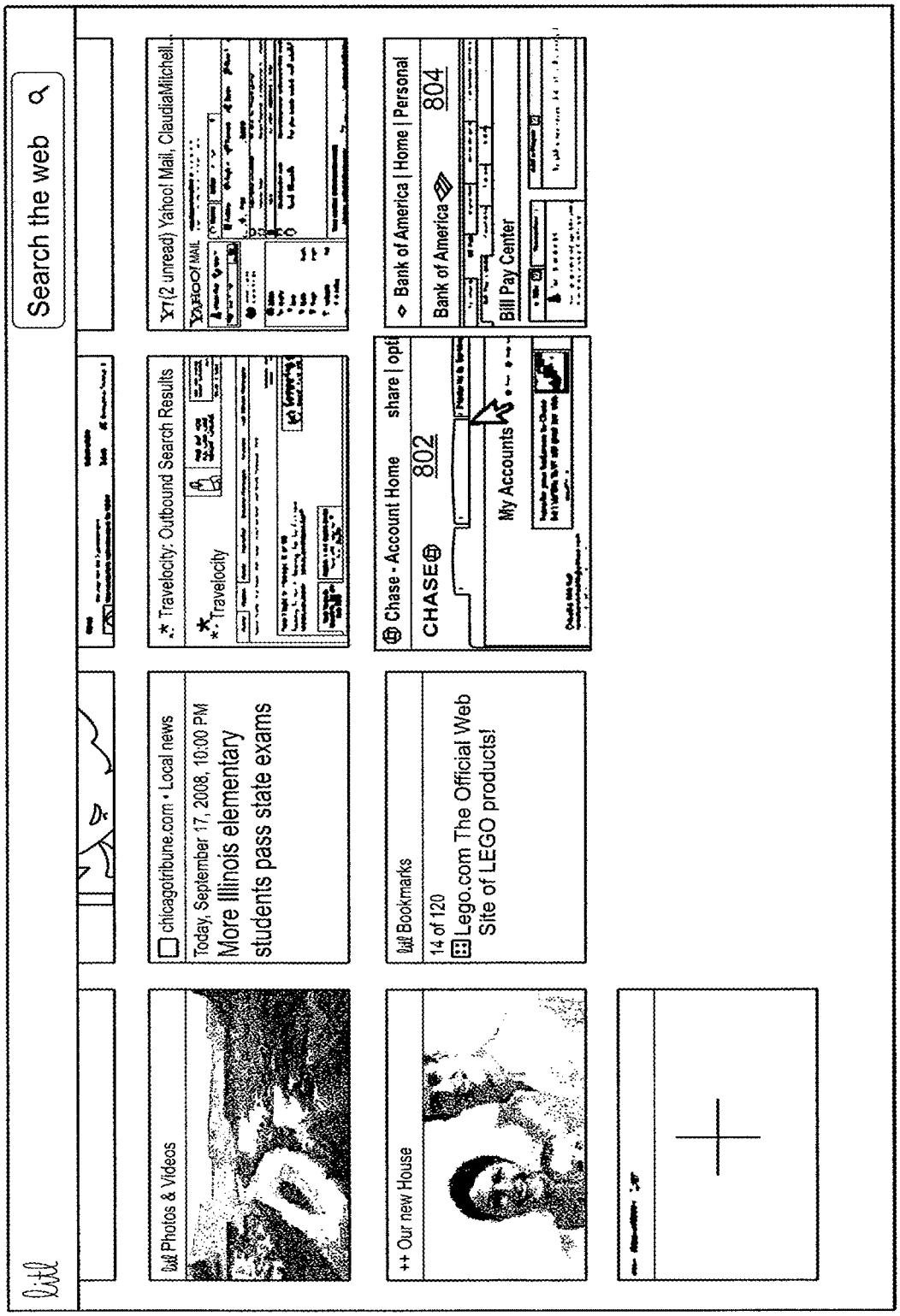
Search the web
Photos & Videos
chicagotribune.com • Local news
Today, September 17, 2008, 10:00 PM
More Illinois elementary students pass state exams
Travelocity: Outbound Search Results
Travelocity
(2 unread) Yahoo! Mail, ClaudiaMitchell...
Bookmarks
14 of 120
Lego.com The Official Web Site of LEGO products!
Chase - Account Home
share | opti
CHASE
802
My Accounts
Bank of America | Home | Personal
Bank of America
804
Bill Pay Center
++ Our new House

FIG. 8

800

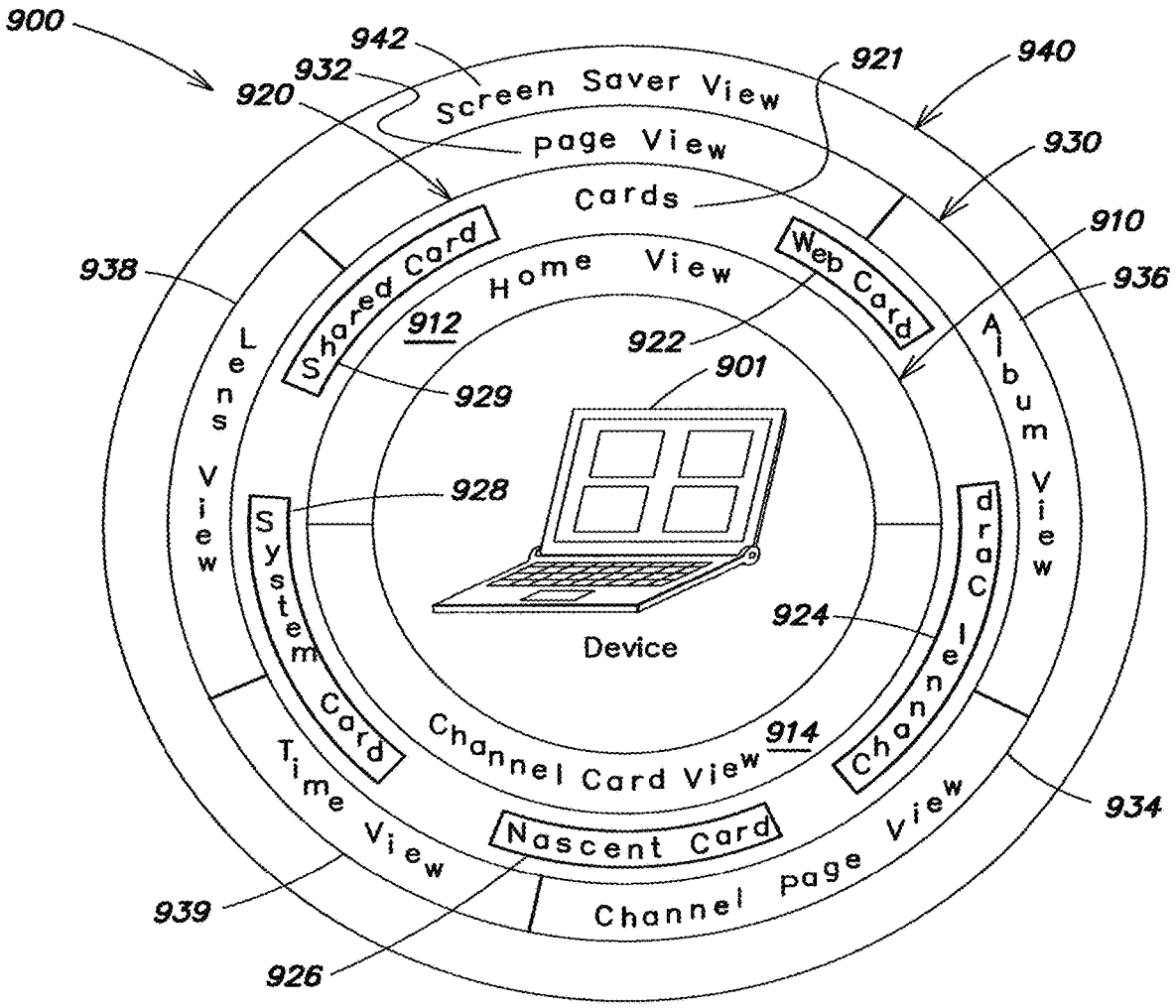
900
942
932
920
921
940
930
910
936
938
934
939
926
Screen Saver View
page View
Cards
Home View
Shared Card
Web Card
Lens View
Album View
Time View
Channel page View
Nascent Card
Channel Card View
Channel Card
System Card
Device
912
922
901
929
928
924
914

FIG. 9

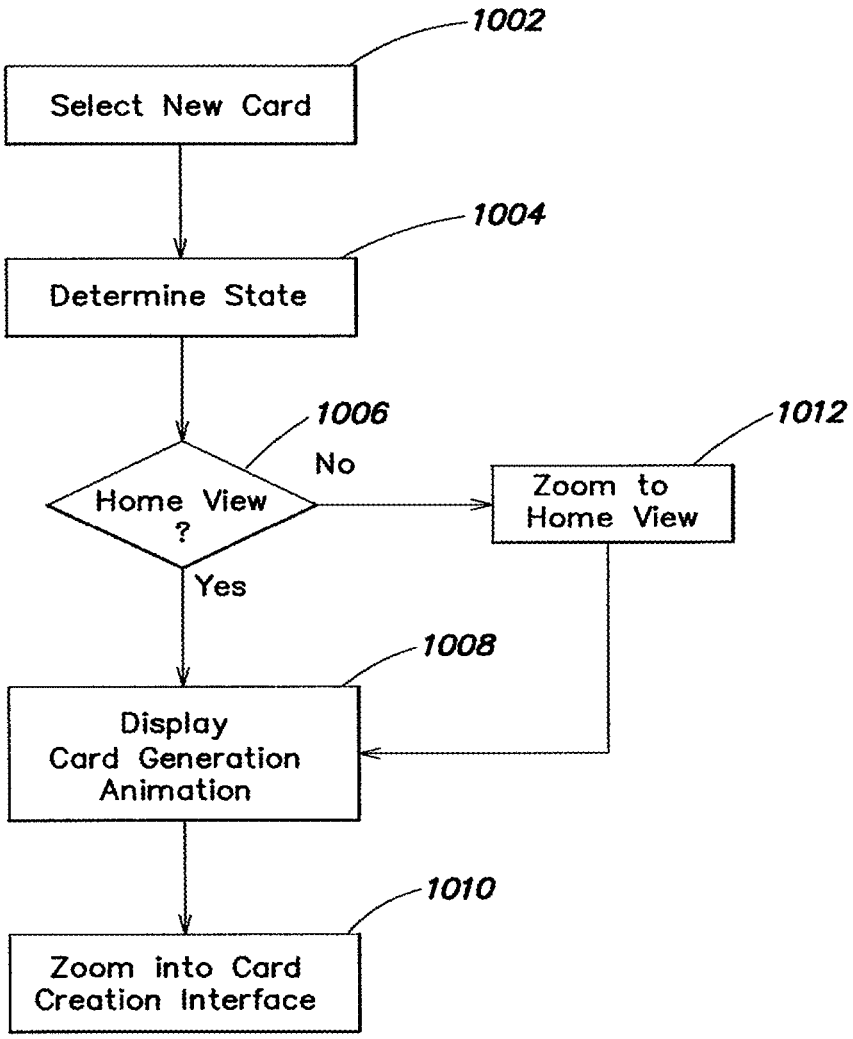
1002
Select New Card
1004
Determine State
1006
Home View ?
No
Yes
1012
Zoom to Home View
1008
Display Card Generation Animation
1010
Zoom into Card Creation Interface

FIG. 10

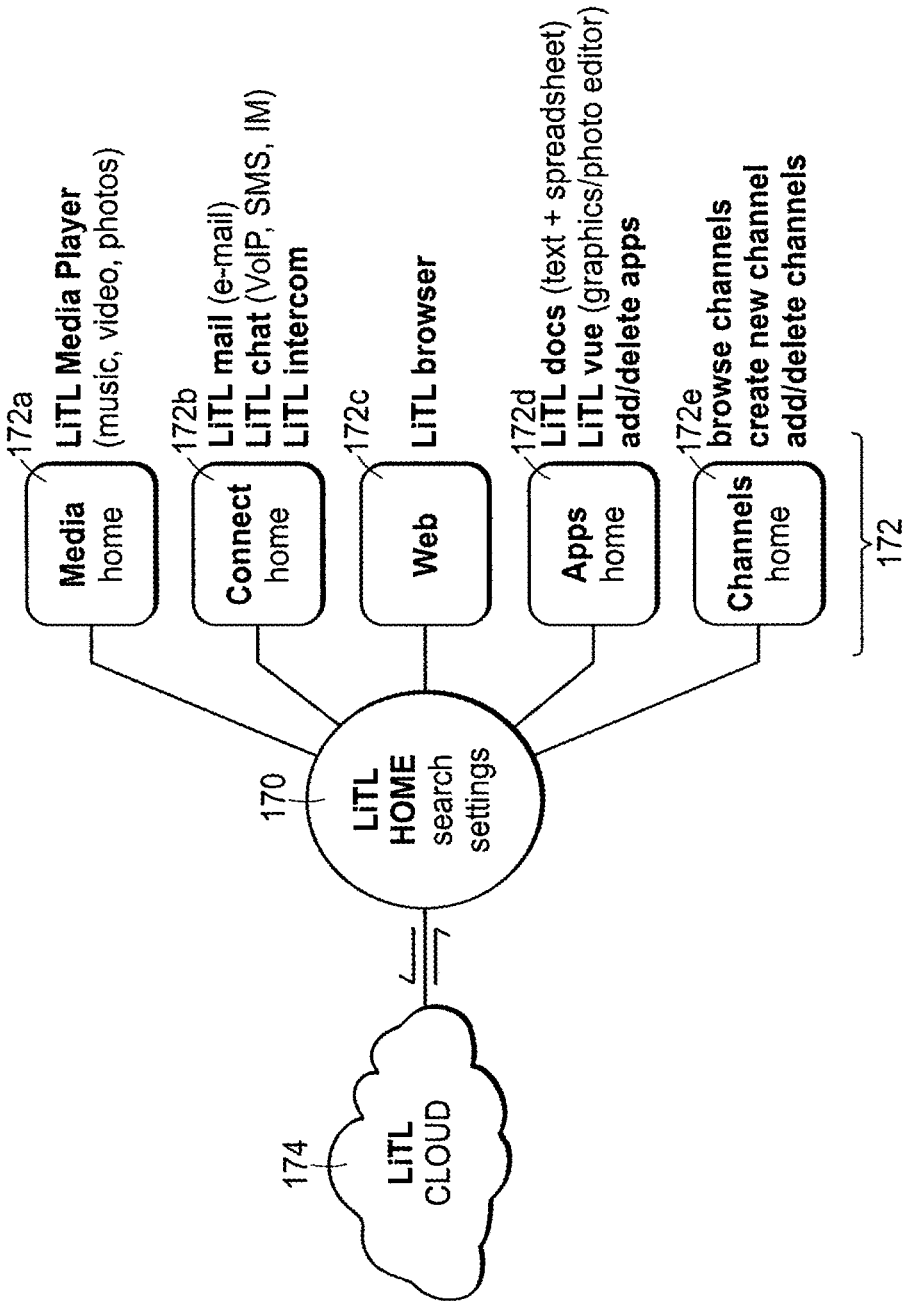
172a
LiTL Media Player
(music, video, photos)
Media
home
172b
LiTL mail (e-mail)
LiTL chat (VoIP, SMS, IM)
LiTL intercom
Connect
home
172c
LiTL browser
Web
172d
LiTL docs (text + spreadsheet)
LiTL vue (graphics/photo editor)
add/delete apps
Apps
home
172e
browse channels
create new channel
add/delete channels
Channels
home
172
170
LiTL
HOME
search
settings
174
LiTL
CLOUD

FIG. 11

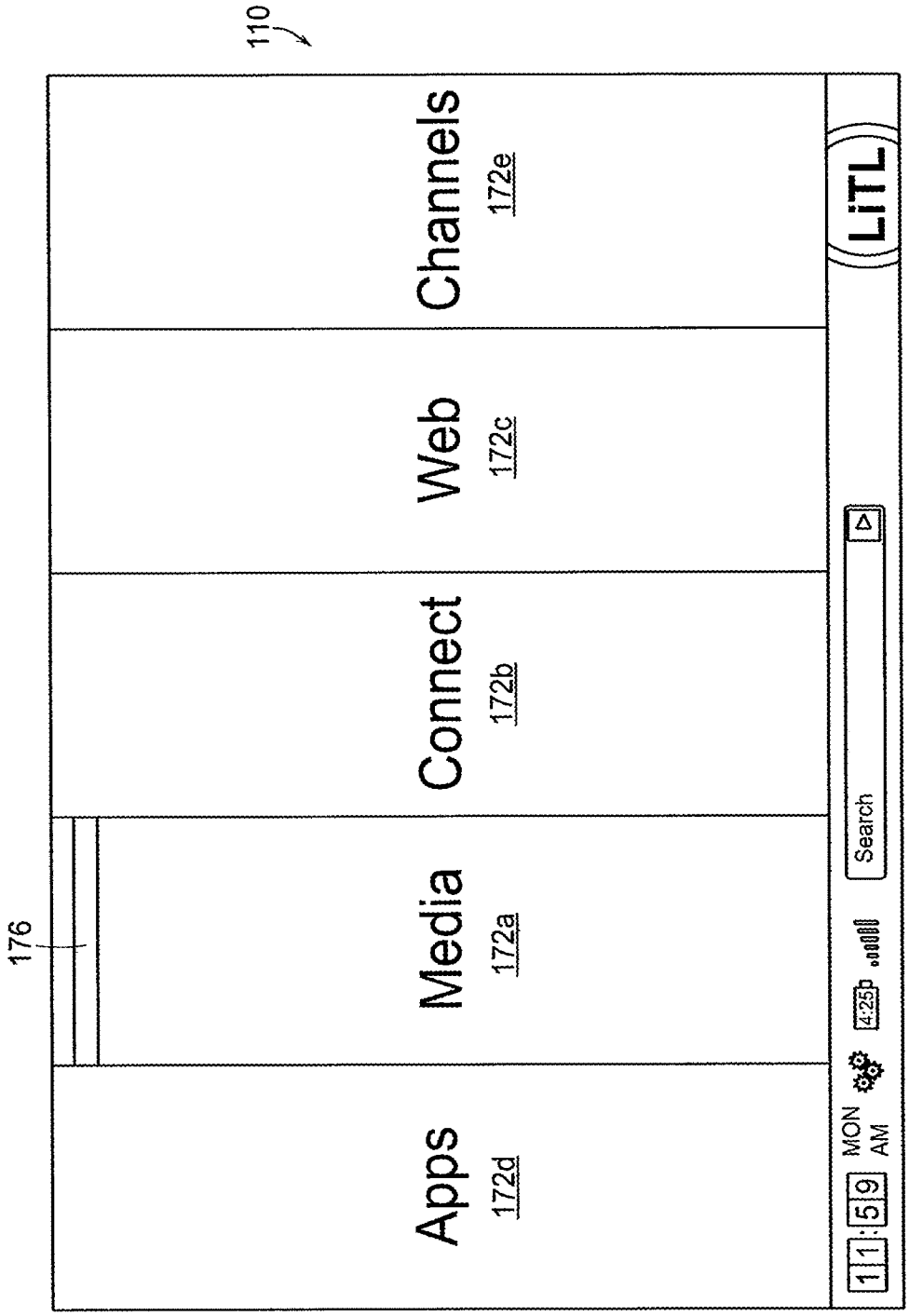
110
176
Apps
172d
Media
172a
Connect
172b
Web
172c
Channels
172e
11:59
MON
AM
4:25p
Search
LiTL

FIG. 12

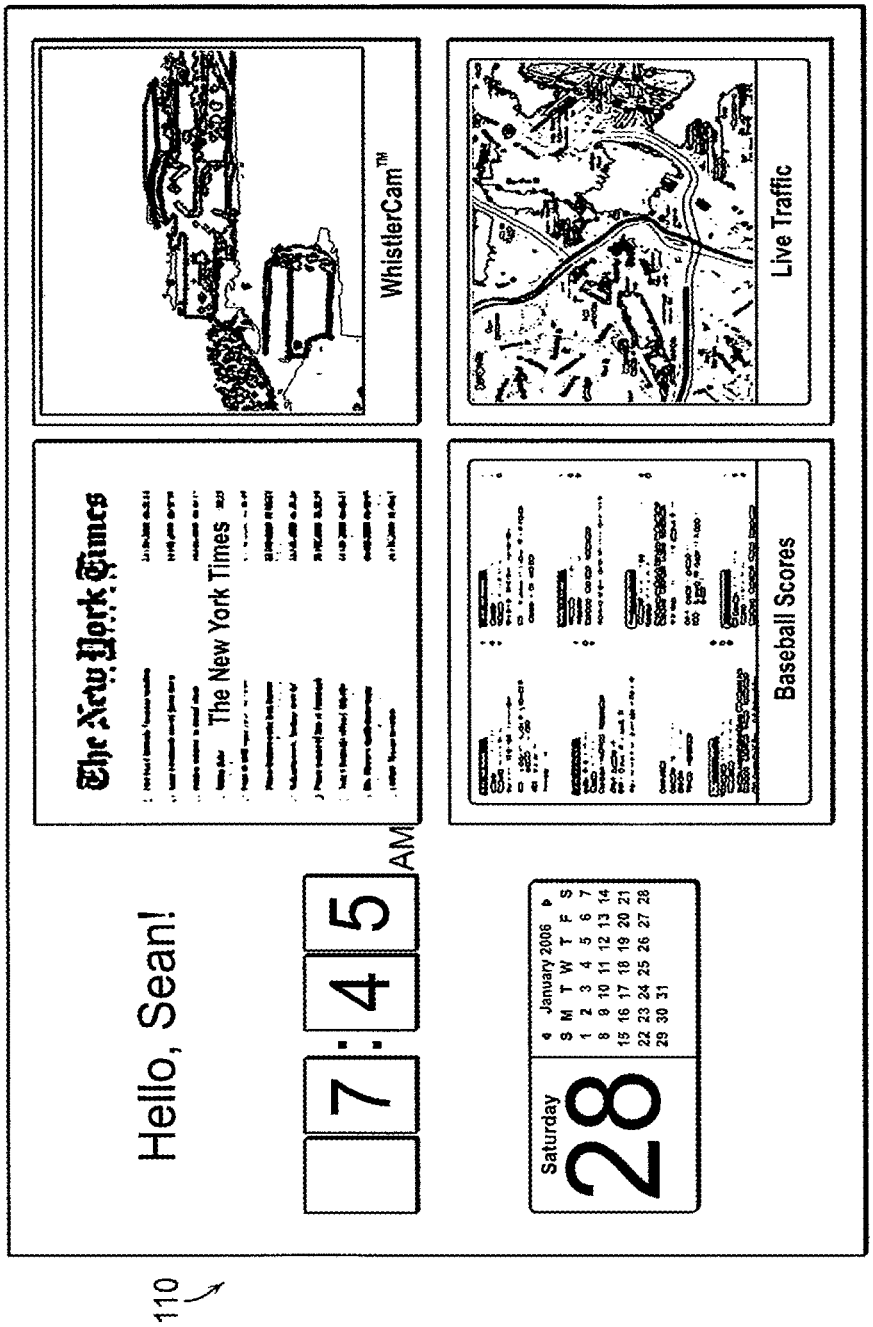
Hello, Sean!
7 : 4 5
AM
The New York Times
The New York Times
WhistlerCam™
Baseball Scores
Live Traffic
Saturday
28
January 2006
S M T W T F S
1 2 3 4 5 6 7
8 9 10 11 12 13 14
15 16 17 18 19 20 21
22 23 24 25 26 27 28
29 30 31
110

FIG. 13

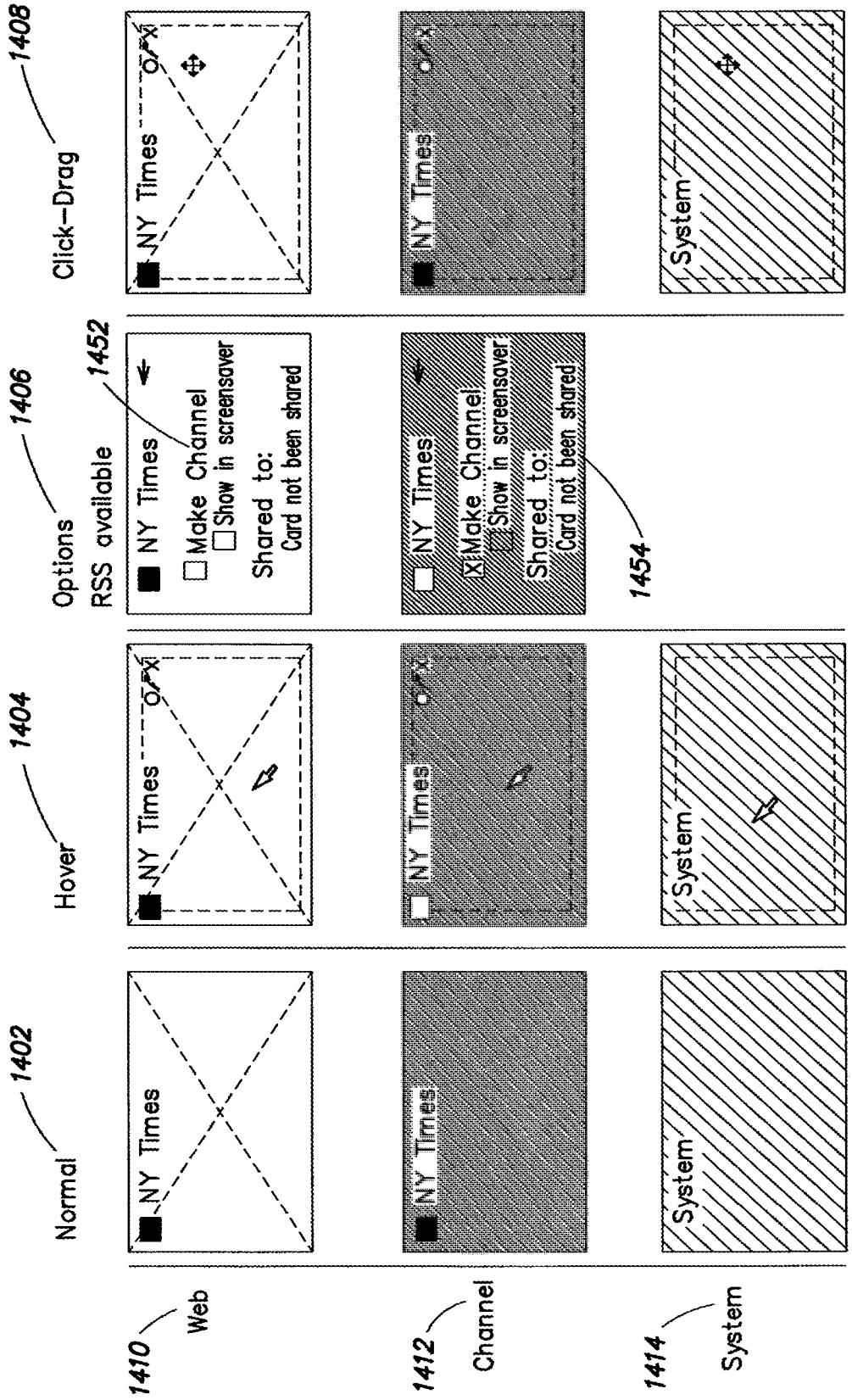
1402
Normal
1404
Hover
1406
Options
RSS available
1408
Click–Drag
1410
Web
1412
Channel
1414
System
NY Times
Make Channel
Show in screensaver
Shared to:
Card not been shared
1452
1454

FIG. 14

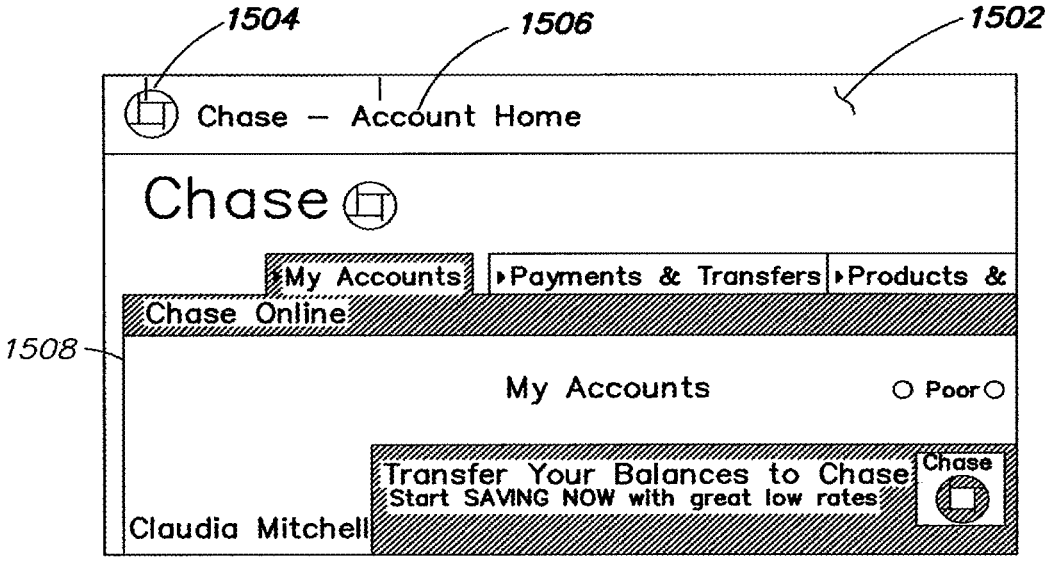

FIG. 15A

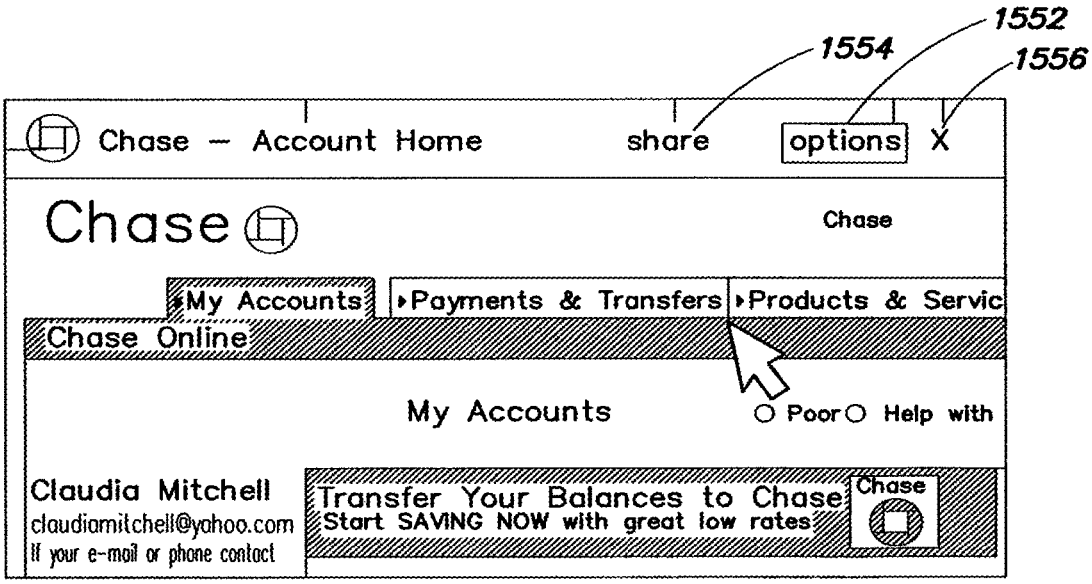

FIG. 15B

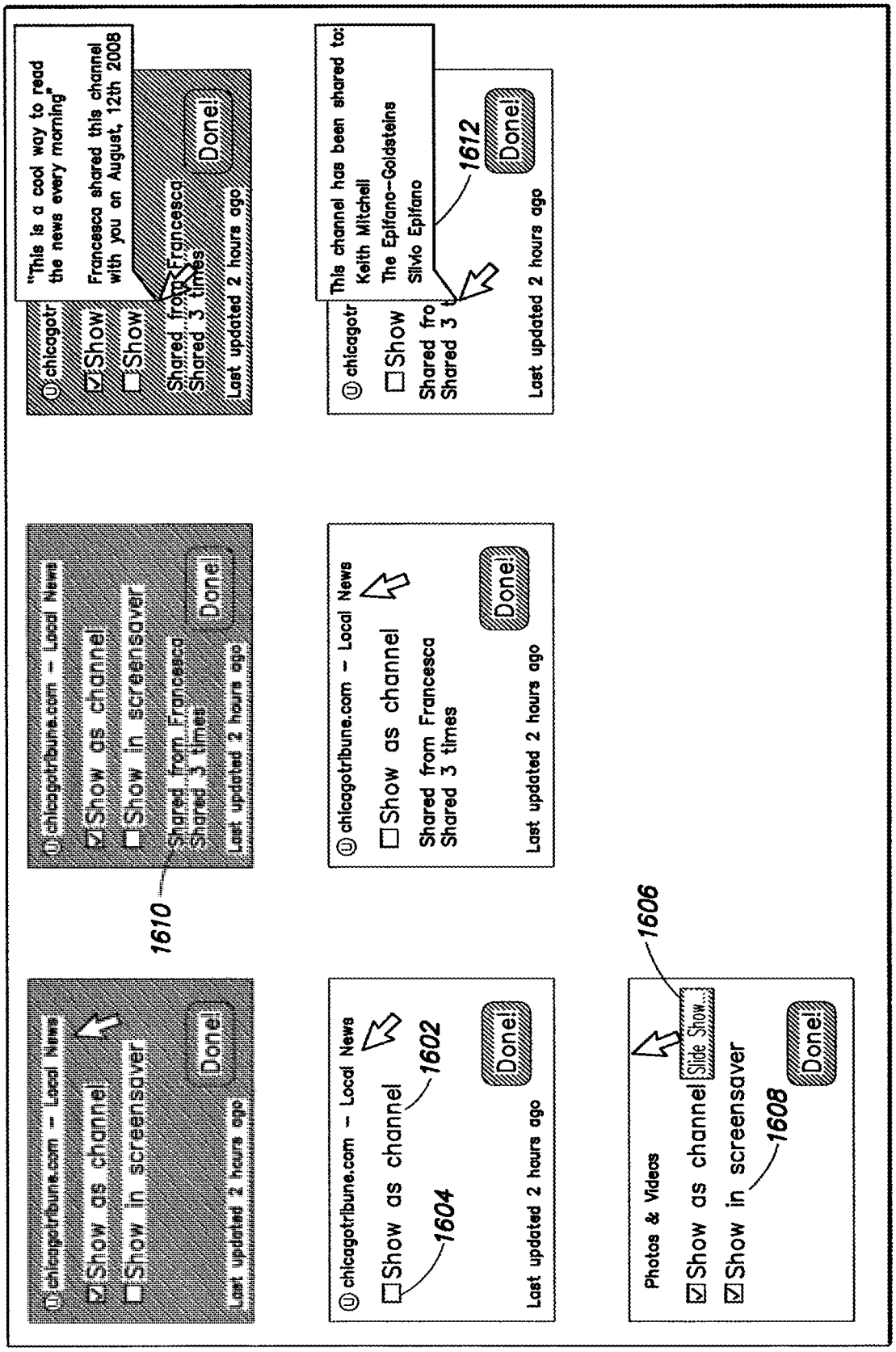
chicagotribune.com – Local News
Show as channel
Show in screensaver
Done!
Last updated 2 hours ago
1610
chicagotribune.com – Local News
Show as channel
Shared from Francesca
Shared 3 times
Done!
Last updated 2 hours ago
chicagotr
Show
Shared from Francesca
Shared 3 times
"This is a cool way to read the news every morning"
Francesca shared this channel with you on August, 12th 2008
Done!
Last updated 2 hours ago
chicagotribune.com – Local News
Show as channel
1602
1604
Done!
Last updated 2 hours ago
chicagotr
Show
Shared fro
Shared 3 t
This channel has been shared to:
Keith Mitchell
The Epifano–Goldsteins
Silvio Epifano
1612
Done!
Last updated 2 hours ago
Photos & Videos
Show as channel
Slide Show...
Show in screensaver
1606
1608
Done!

FIG. 16

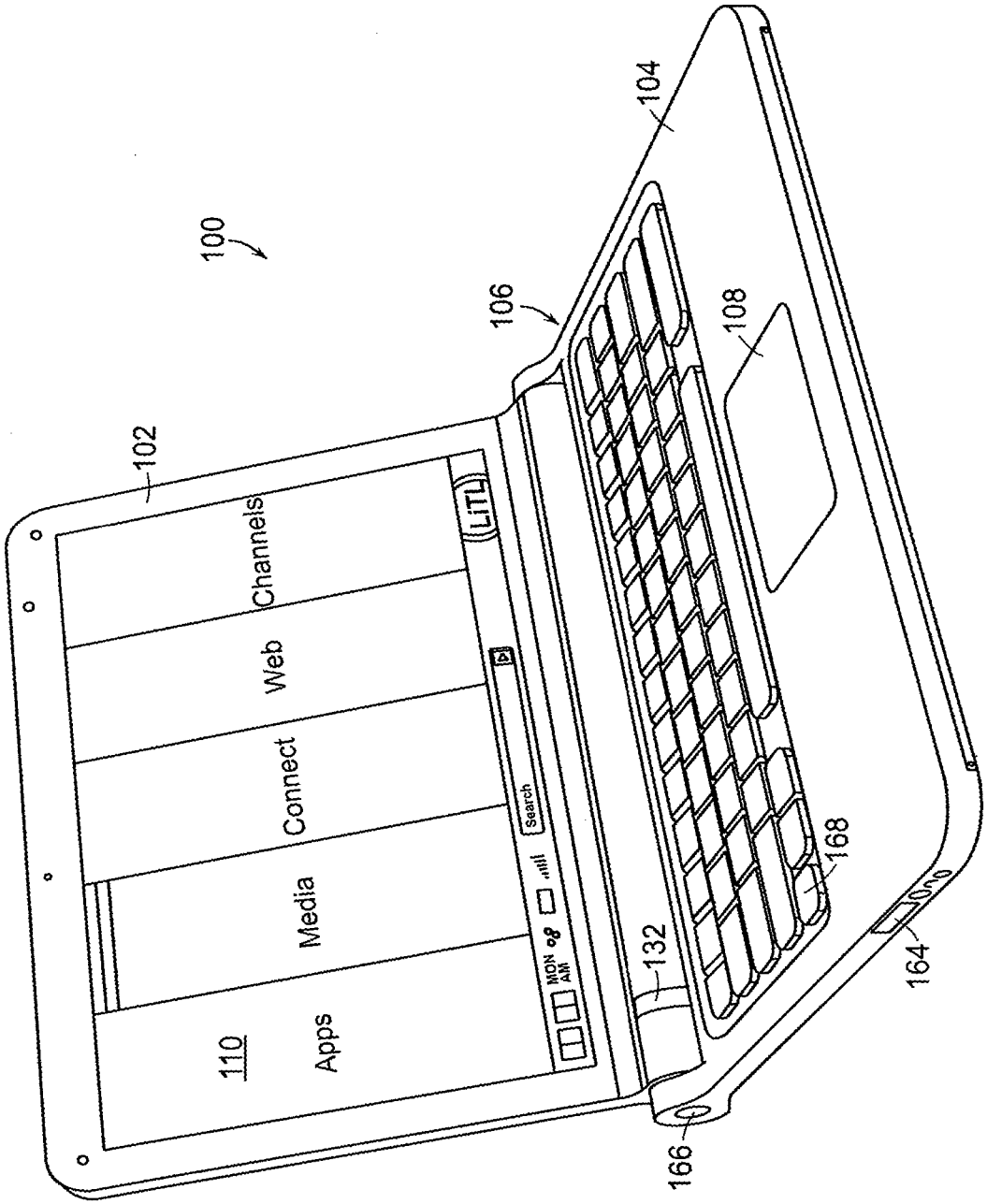
100
102
104
106
108
110
Apps
Media
Connect
Web
Channels
LiTL
Search
MON
AM
132
164
166
168

FIG. 17

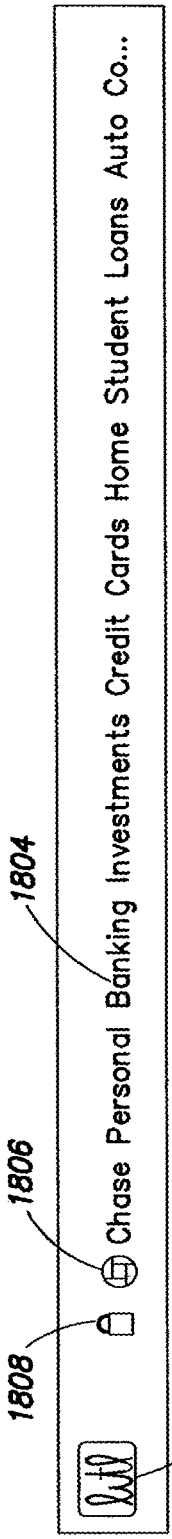

FIG. 18A

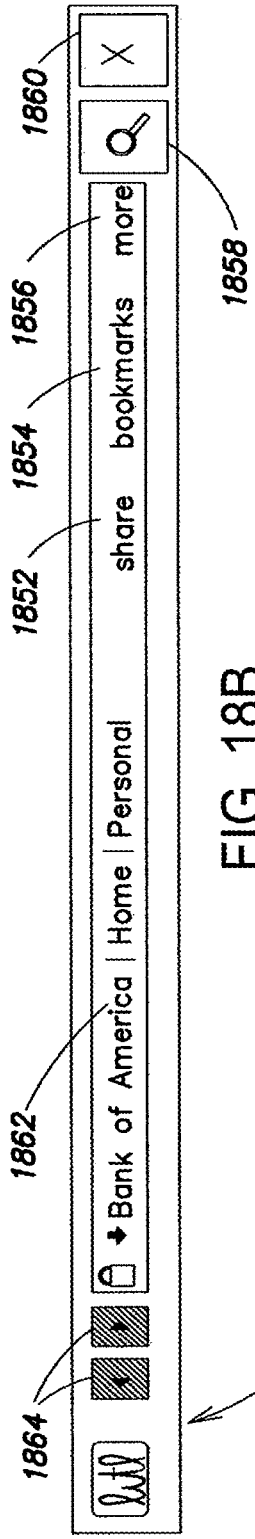

FIG. 18B

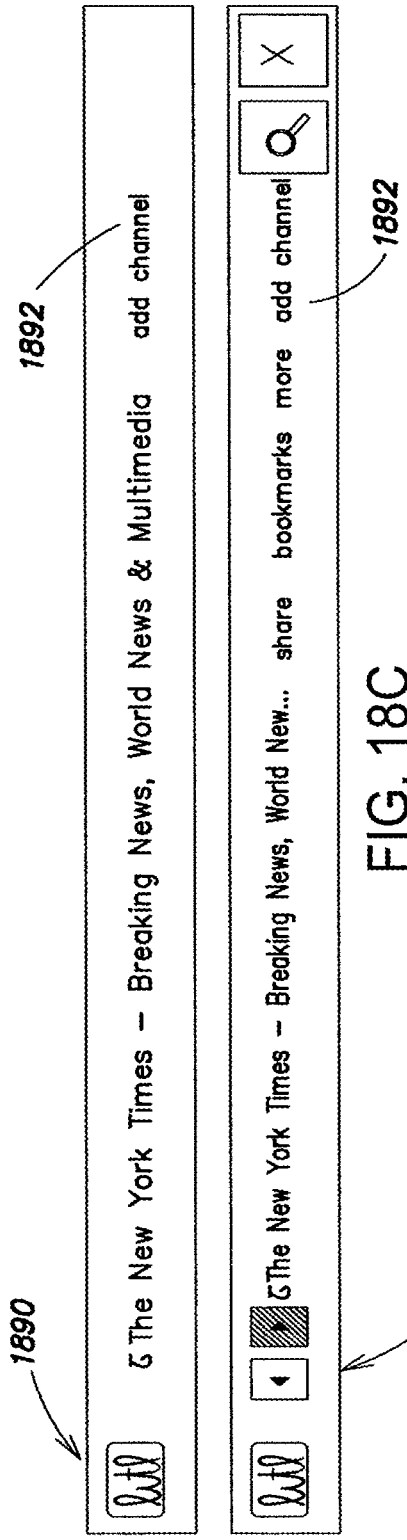

FIG. 18C

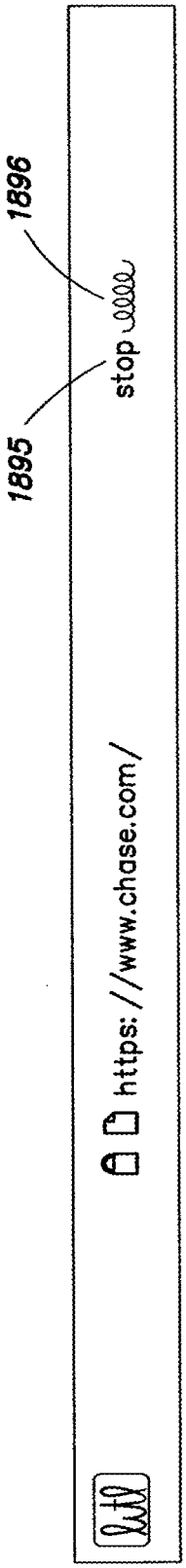

FIG. 18D

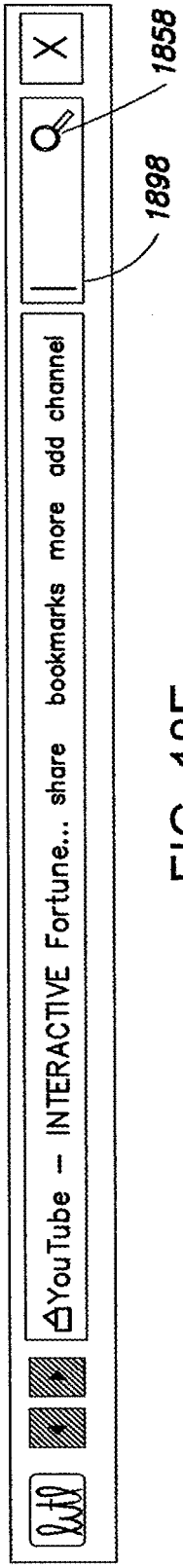

FIG. 18E

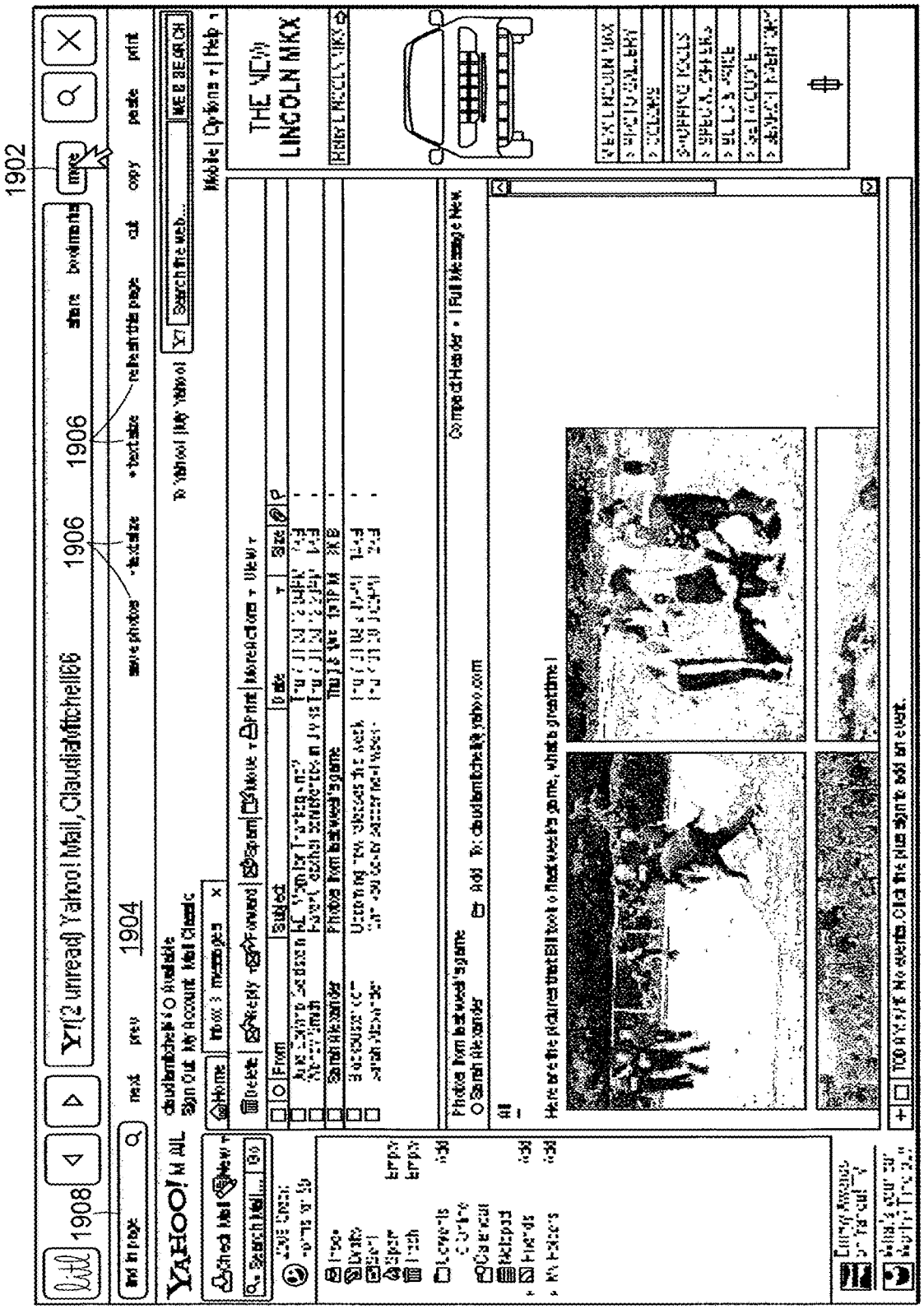

FIG. 19

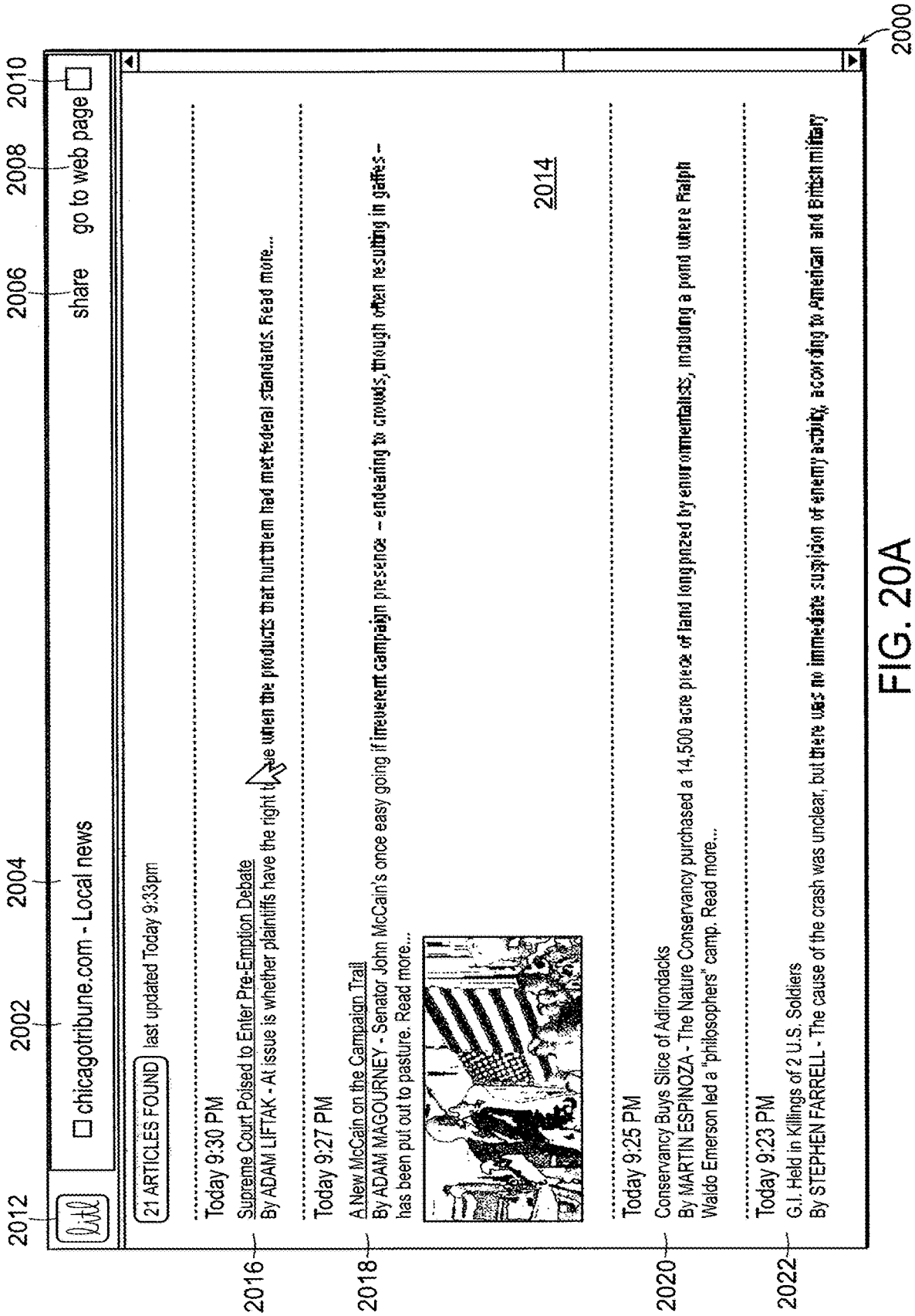
2000
2002
2004
2006
2008
2010
2012
chicagotribune.com - Local news
share
go to web page
21 ARTICLES FOUND
last updated Today 9:33pm
2016
Today 9:30 PM
Supreme Court Poised to Enter Pre-Emption Debate
By ADAM LIFTAK - At issue is whether plaintiffs have the right to sue when the products that hurt them had met federal standards. Read more...
2018
Today 9:27 PM
A New McCain on the Campaign Trail
By ADAM MAGOURNEY - Senator John McCain's once easy going if irreverent campaign presence – endearing to crowds, though often resulting in gaffes – has been put out to pasture. Read more...
2014
2020
Today 9:25 PM
Conservancy Buys Slice of Adirondacks
By MARTIN ESPINOZA - The Nature Conservancy purchased a 14,500 acre piece of land longprized by environmentalists, including a pond where Ralph Waldo Emerson led a "philosophers" camp. Read more...
2022
Today 9:23 PM
G.I. Held in Killings of 2 U.S. Soldiers
By STEPHEN FARRELL - The cause of the crash was unclear, but there was no immediate suspicion of enemy activity, according to American and British military

FIG. 20A

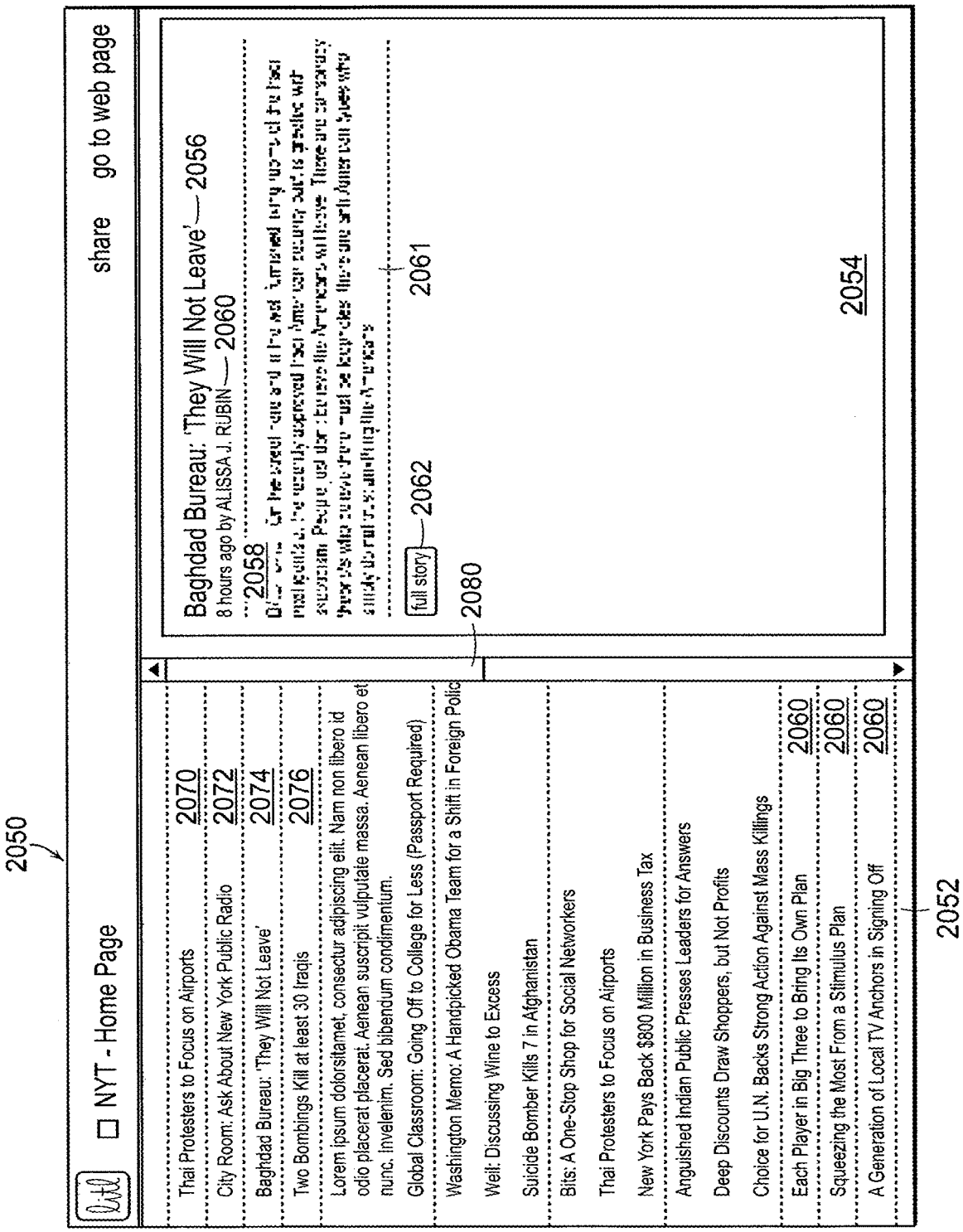
2050
NYT - Home Page
share
go to web page
Thai Protesters to Focus on Airports 2070
City Room: Ask About New York Public Radio 2072
Baghdad Bureau: 'They Will Not Leave' 2074
Two Bombings Kill at least 30 Iraqis 2076
Lorem ipsum dolorsitamet, consectur adipiscing elit. Nam non libero id odio placerat placerat. Aenean suscripit vulputate massa. Aenean libero et nunc. Invelenim. Sed bibendum condimentum.
Global Classroom: Going Off to College for Less (Passport Required)
Washington Memo: A Handpicked Obama Team for a Shift in Foreign Polic
Weil: Discussing Wine to Excess
Suicide Bomber Kills 7 in Afghanistan
Bits: A One-Stop Shop for Social Networkers
Thai Protesters to Focus on Airports
New York Pays Back $800 Million in Business Tax
Anguished Indian Public Presses Leaders for Answers
Deep Discounts Draw Shoppers, but Not Profits
Choice for U.N. Backs Strong Action Against Mass Killings
Each Player in Big Three to Bring Its Own Plan 2060
Squeezing the Most From a Stimulus Plan 2060
A Generation of Local TV Anchors in Signing Off 2060
2052
2080
Baghdad Bureau: 'They Will Not Leave' 2056
8 hours ago by ALISSA J. RUBIN 2060
2058
full story 2062
2061
2054

FIG. 20B

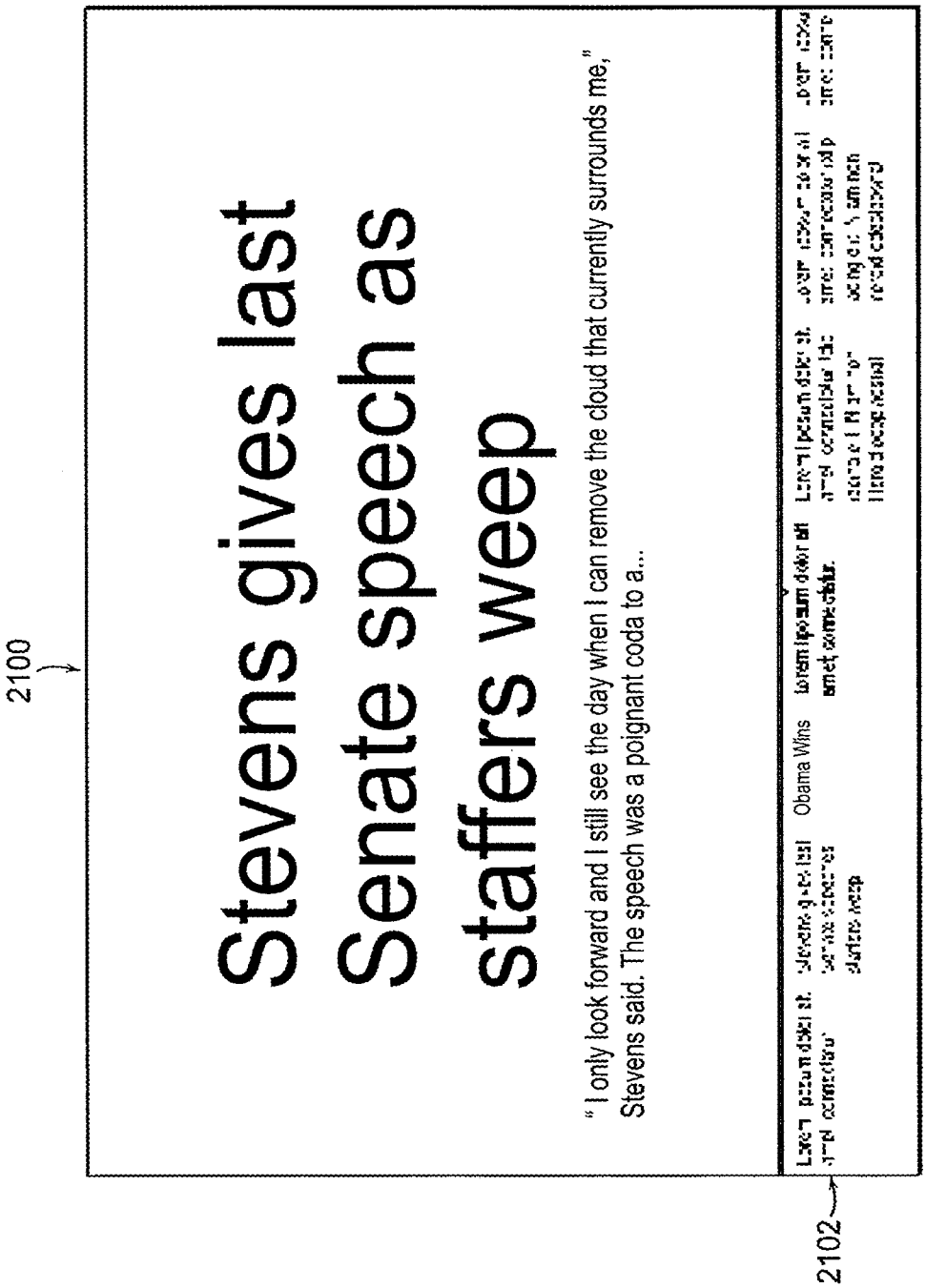
2100
Stevens gives last Senate speech as staffers weep
" I only look forward and I still see the day when I can remove the cloud that currently surrounds me," Stevens said. The speech was a poignant coda to a...
Obama Wins
2102

FIG. 21

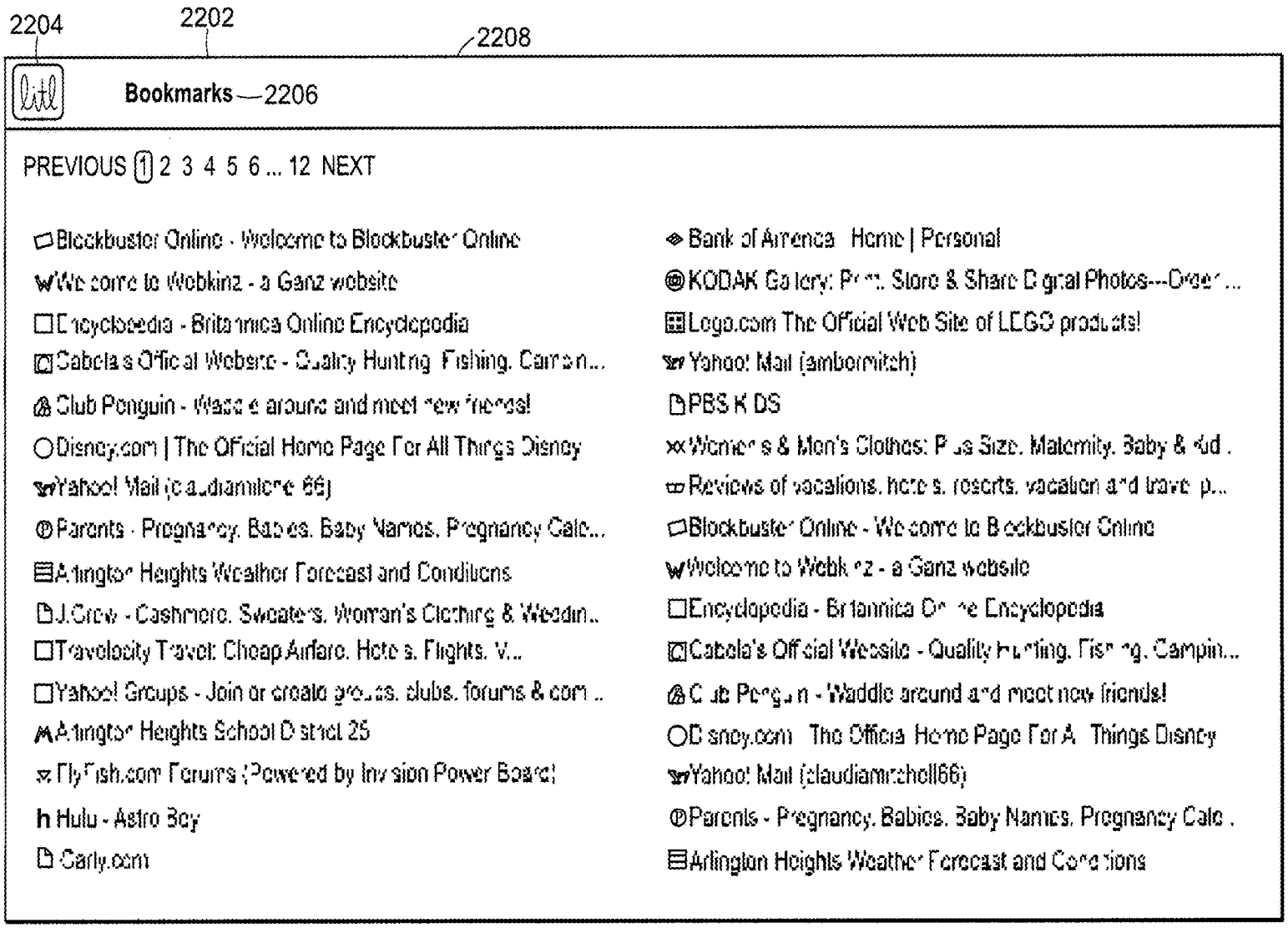
2204
2202
2208
Bookmarks—2206
PREVIOUS 1 2 3 4 5 6 ... 12 NEXT
Blockbuster Online - Welcome to Blockbuster Online
Welcome to Webkinz - a Ganz website
Encyclopedia - Britannica Online Encyclopedia
Cabela's Official Website - Quality Hunting, Fishing, Camping...
Club Penguin - Waddle around and meet new friends!
Disney.com | The Official Home Page For All Things Disney
Yahoo! Mail (claudiamitchell66)
Parents - Pregnancy, Babies, Baby Names, Pregnancy Calc...
Arlington Heights Weather Forecast and Conditions
J.Crew - Cashmere, Sweaters, Women's Clothing & Wedding...
Travelocity Travel: Cheap Airfare, Hotels, Flights, V...
Yahoo! Groups - Join or create groups, clubs, forums & com...
Arlington Heights School District 25
FlyFish.com Forums (Powered by Invision Power Board)
Hulu - Astro Boy
Carly.com
Bank of America Home | Personal
KODAK Gallery: Print, Store & Share Digital Photos---Order...
Lego.com The Official Web Site of LEGO products!
Yahoo! Mail (jambormitch)
PBS KIDS
Women's & Men's Clothes: Plus Size, Maternity, Baby & Kid...
Reviews of vacations, hotels, resorts, vacation and travel p...
Blockbuster Online - Welcome to Blockbuster Online
Welcome to Webkinz - a Ganz website
Encyclopedia - Britannica Online Encyclopedia
Cabela's Official Website - Quality Hunting, Fishing, Camping...
Club Penguin - Waddle around and meet new friends!
Disney.com The Official Home Page For All Things Disney
Yahoo! Mail (claudiamitchell66)
Parents - Pregnancy, Babies, Baby Names, Pregnancy Calc...
Arlington Heights Weather Forecast and Conditions

FIG. 22

2302
2310
2308
2306
2304
Video Messages 1
Mitchell Family
Today at 2:12 PM
Weather: Milan, Italy. Light rain with thunder, 72°F
Sorrento
78°
Venezia
International Herald Tribune
Bush faults China over rights and detentions
THU AUGUST 7, 2008 / 7:30 PM
The White House on Wednesday released critical re

FIG. 23

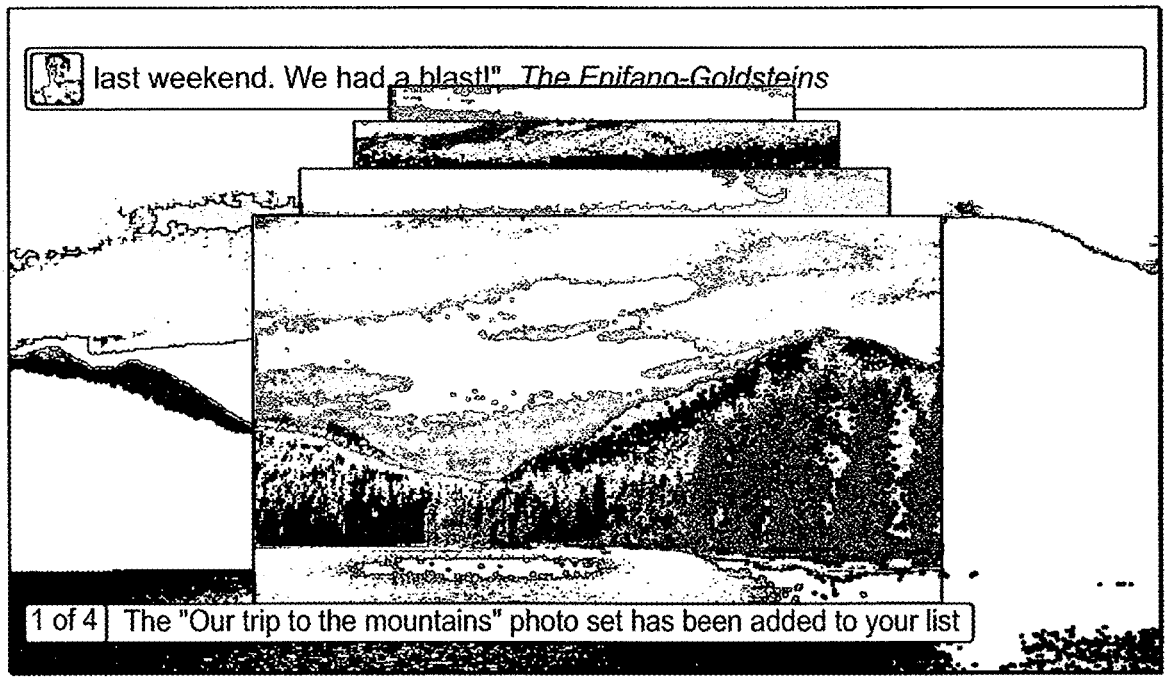
last weekend. We had a blast!" The Enifano-Goldsteins
1 of 4
The "Our trip to the mountains" photo set has been added to your list

FIG. 24

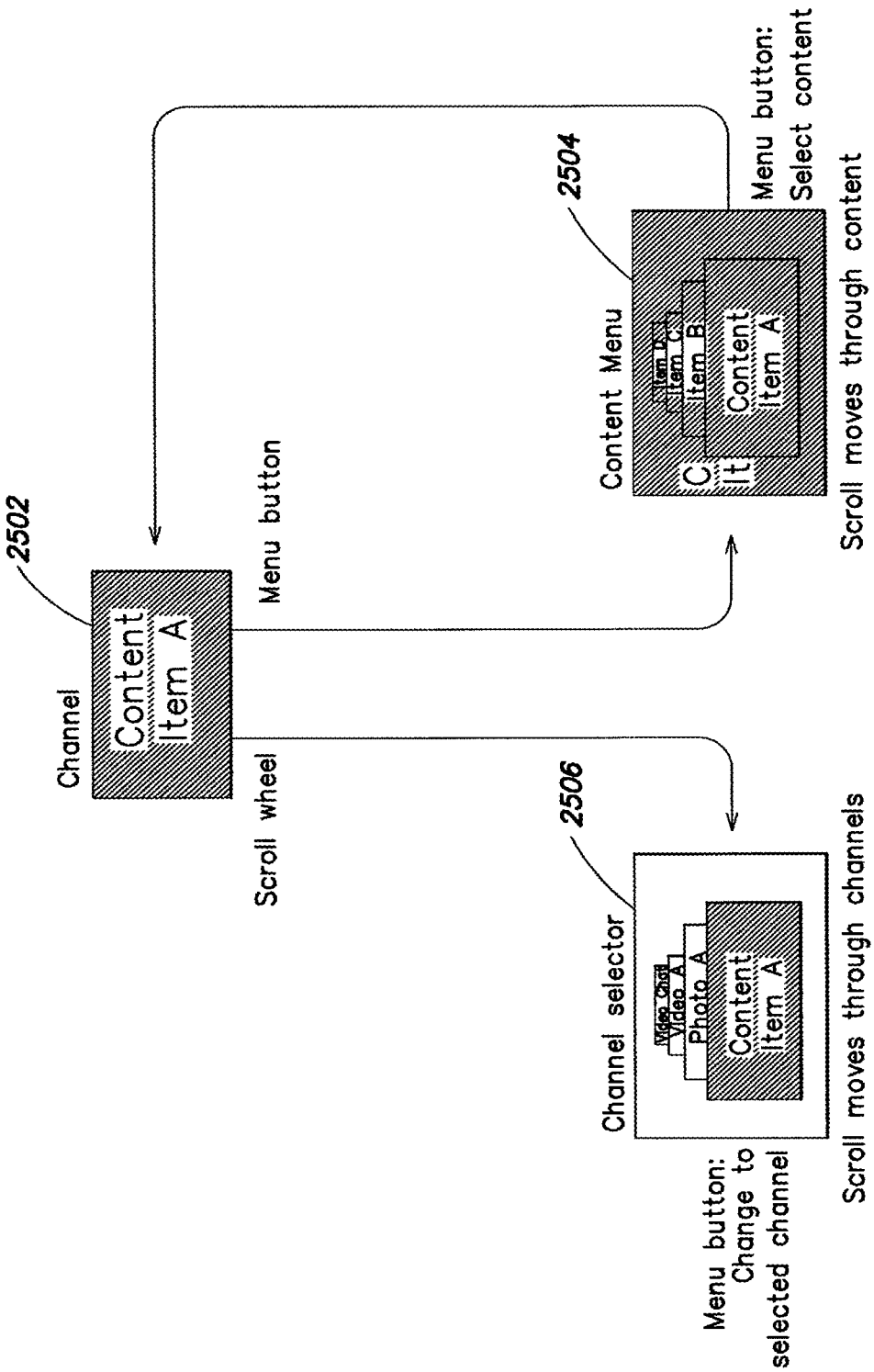
2502
Channel
Content
Item A
Menu button
Scroll wheel
2504
Content Menu
Item D
Item C
Item B
Content
Item A
Menu button:
Select content
Scroll moves through content
2506
Channel selector
Video Chat
Video A
Photo A
Content
Item A
Menu button:
Change to
selected channel
Scroll moves through channels

FIG. 25A

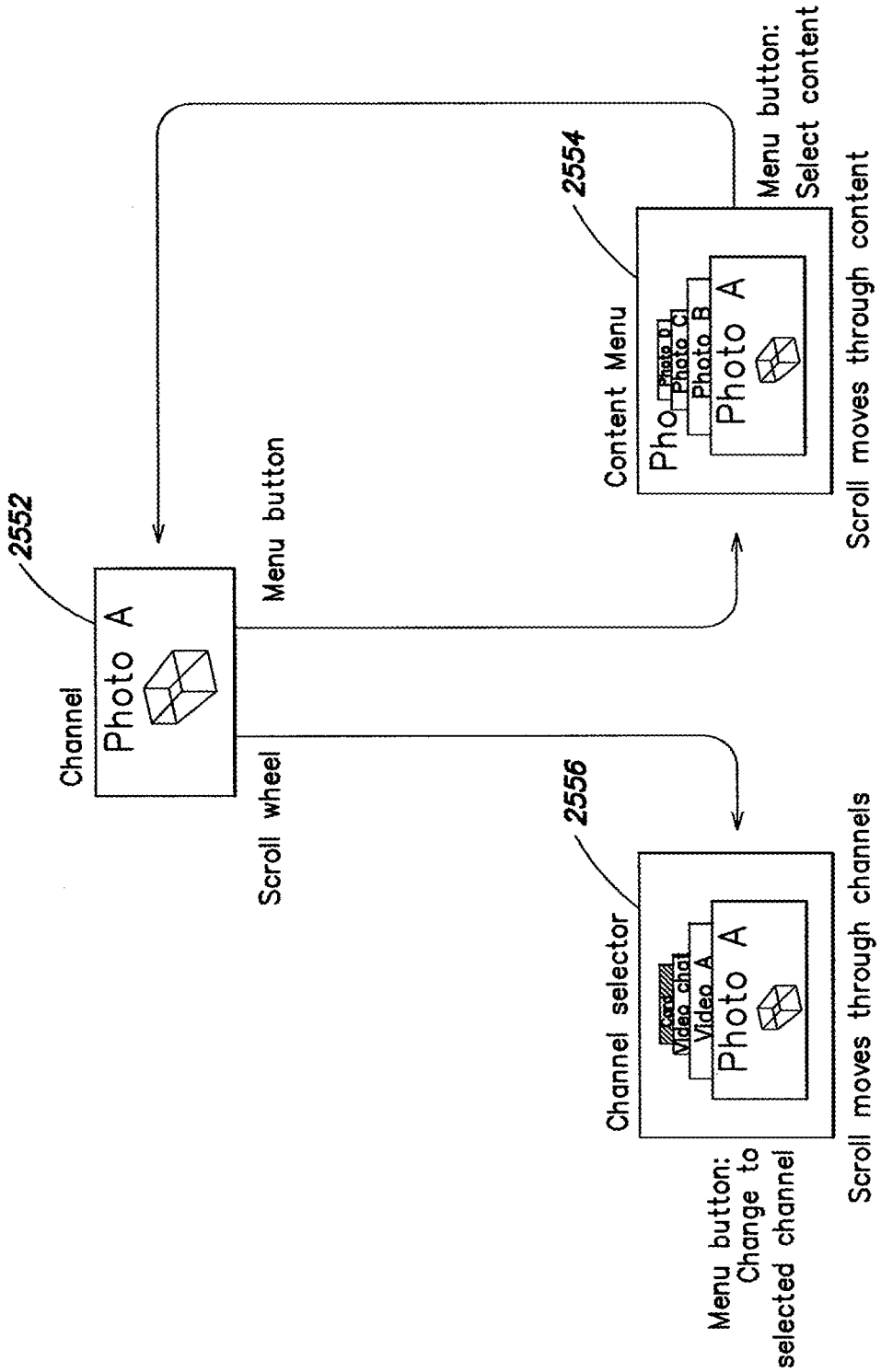
2552
Channel
Photo A
Menu button
Scroll wheel
2554
Content Menu
Photo D
Photo C
Photo B
Photo A
Menu button:
Select content
Scroll moves through content
2556
Channel selector
Video C
Video B
Video A
Photo A
Menu button:
Change to
selected channel
Scroll moves through channels

FIG. 25B

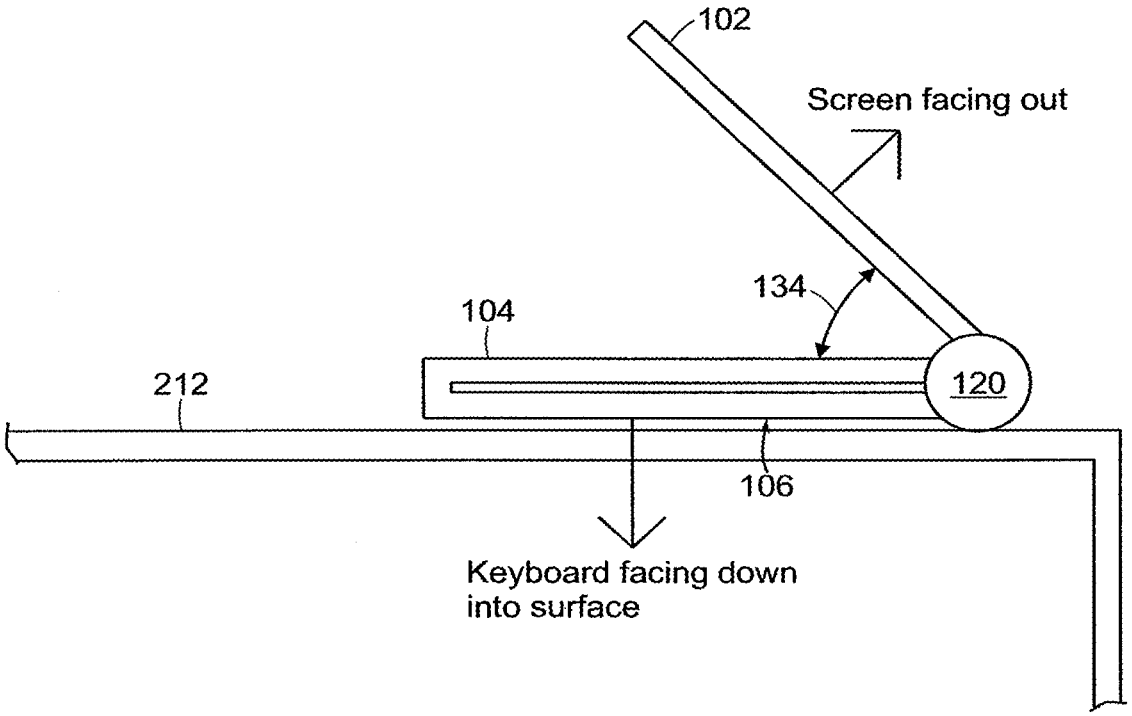
102
Screen facing out
134
104
212
120
106
Keyboard facing down
into surface

FIG. 26

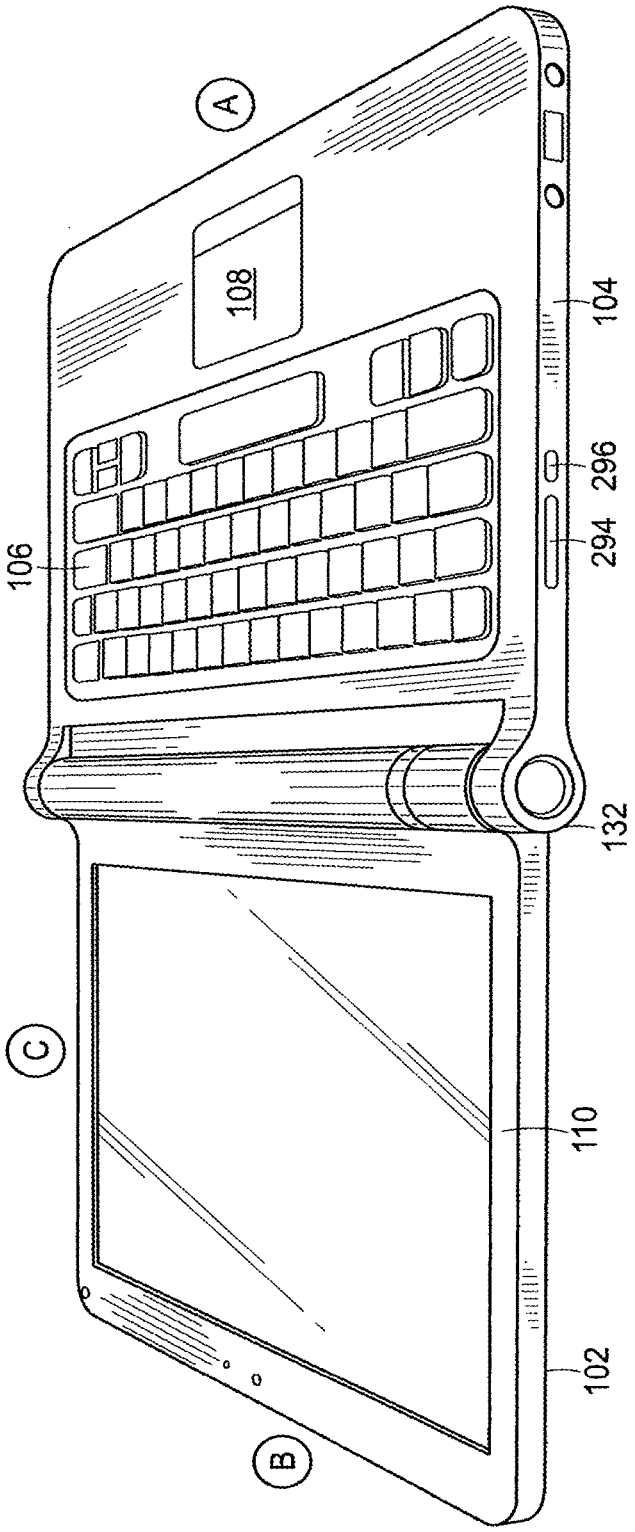

FIG. 27

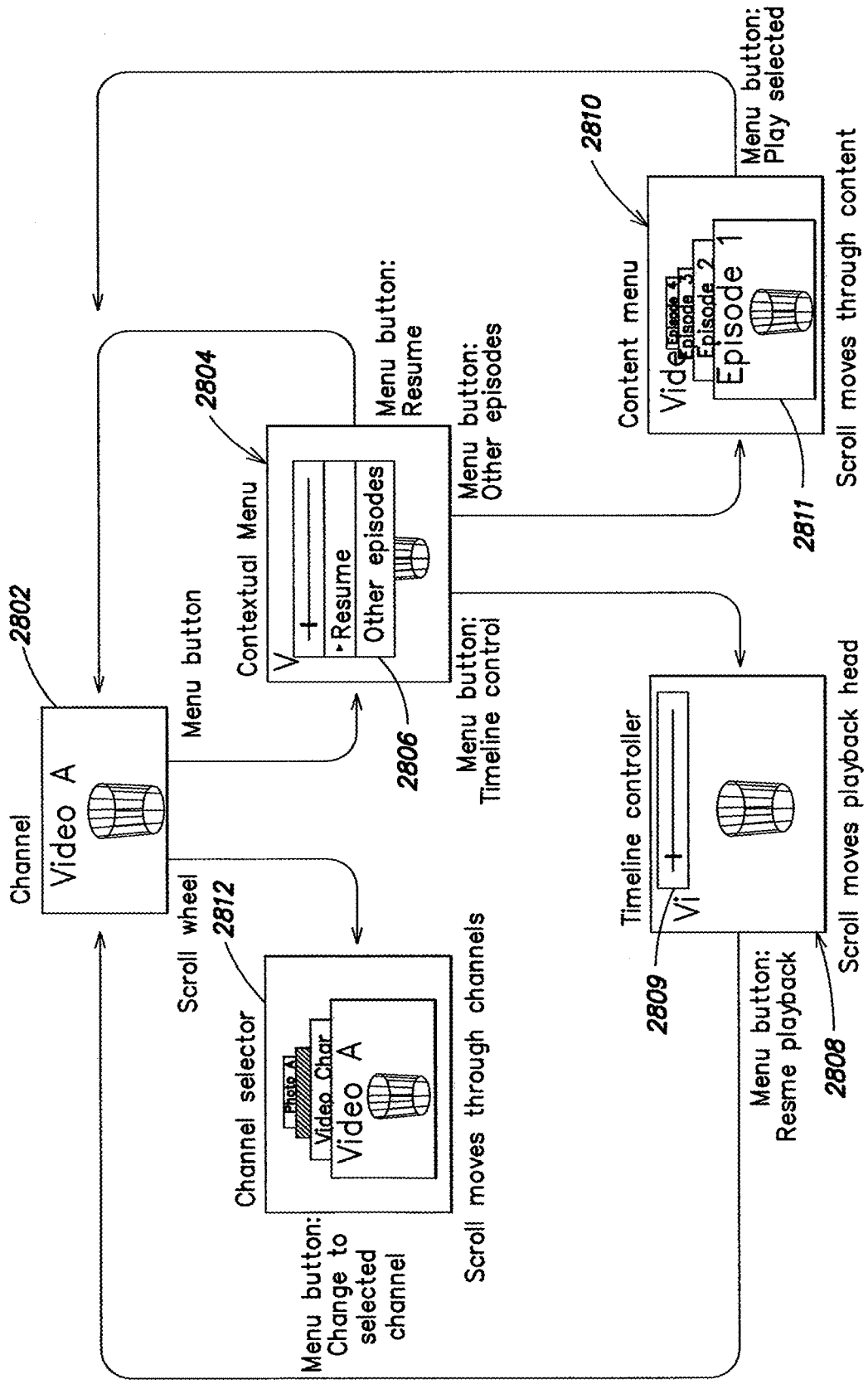
2802
Channel
Video A
Menu button
Scroll wheel
2812
Channel selector
Video A
Video Char
Menu button: Change to selected channel
Scroll moves through channels
2804
Contextual Menu
Resume
Other episodes
2806
Menu button: Resume
Menu button: Other episodes
Menu button: Timeline control
2810
Content menu
Episode 1
Episode 2
Episode 3
Episode 4
2811
Menu button: Play selected
Scroll moves through content
Timeline controller
2809
Menu button: Resme playback
2808
Scroll moves playback head

FIG. 28

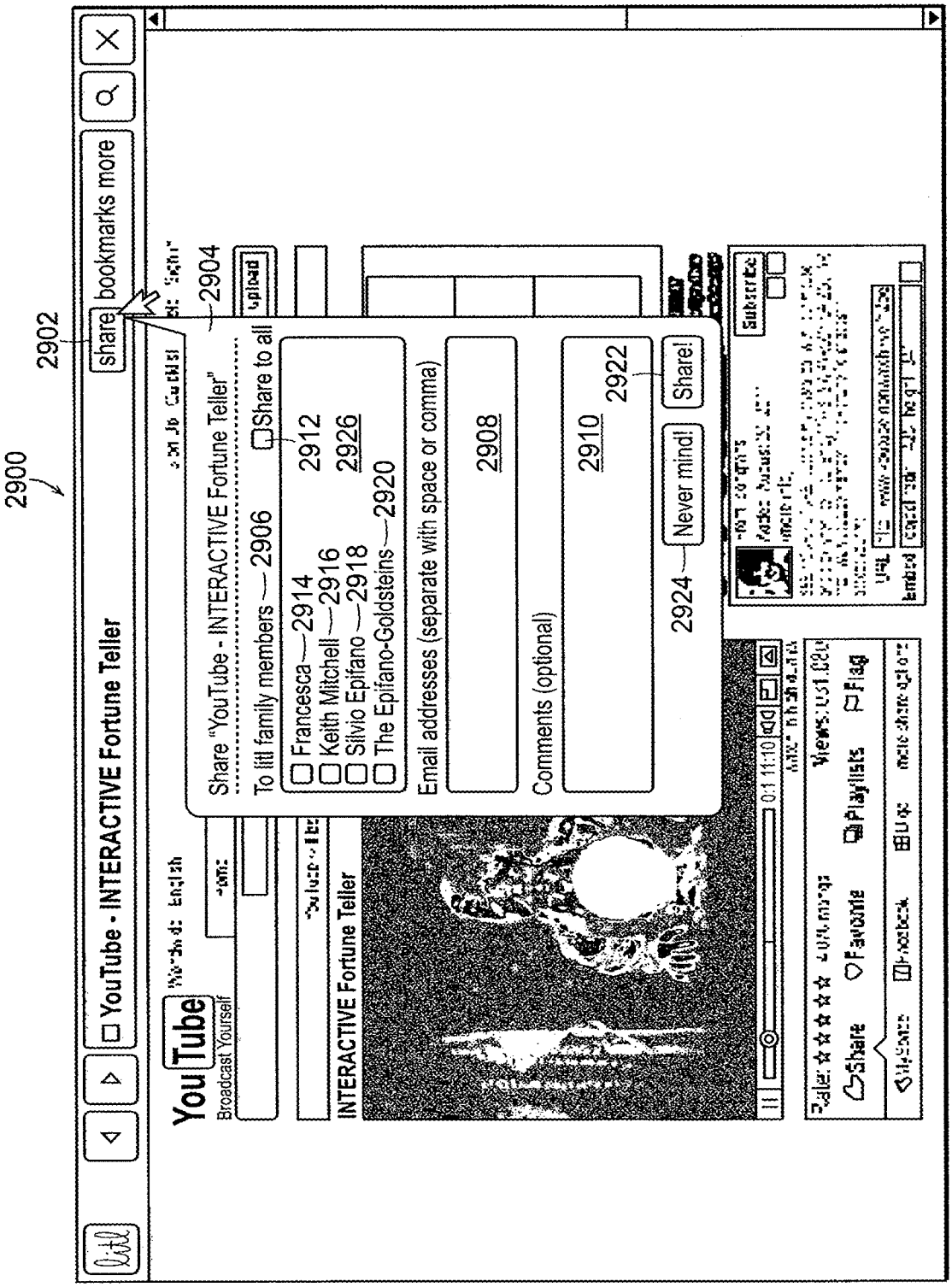
2900
2902
2904
YouTube - INTERACTIVE Fortune Teller
share
bookmarks
more
Share "YouTube - INTERACTIVE Fortune Teller"
To litl family members
2906
Share to all
Francesca
2914
Keith Mitchell
2916
Silvio Epifano
2918
The Epifano-Goldsteins
2920
2912
2926
Email addresses (separate with space or comma)
2908
Comments (optional)
2910
2922
Never mind!
Share!
2924
INTERACTIVE Fortune Teller
Share
Favorite
Playlists
Flag

FIG. 29A

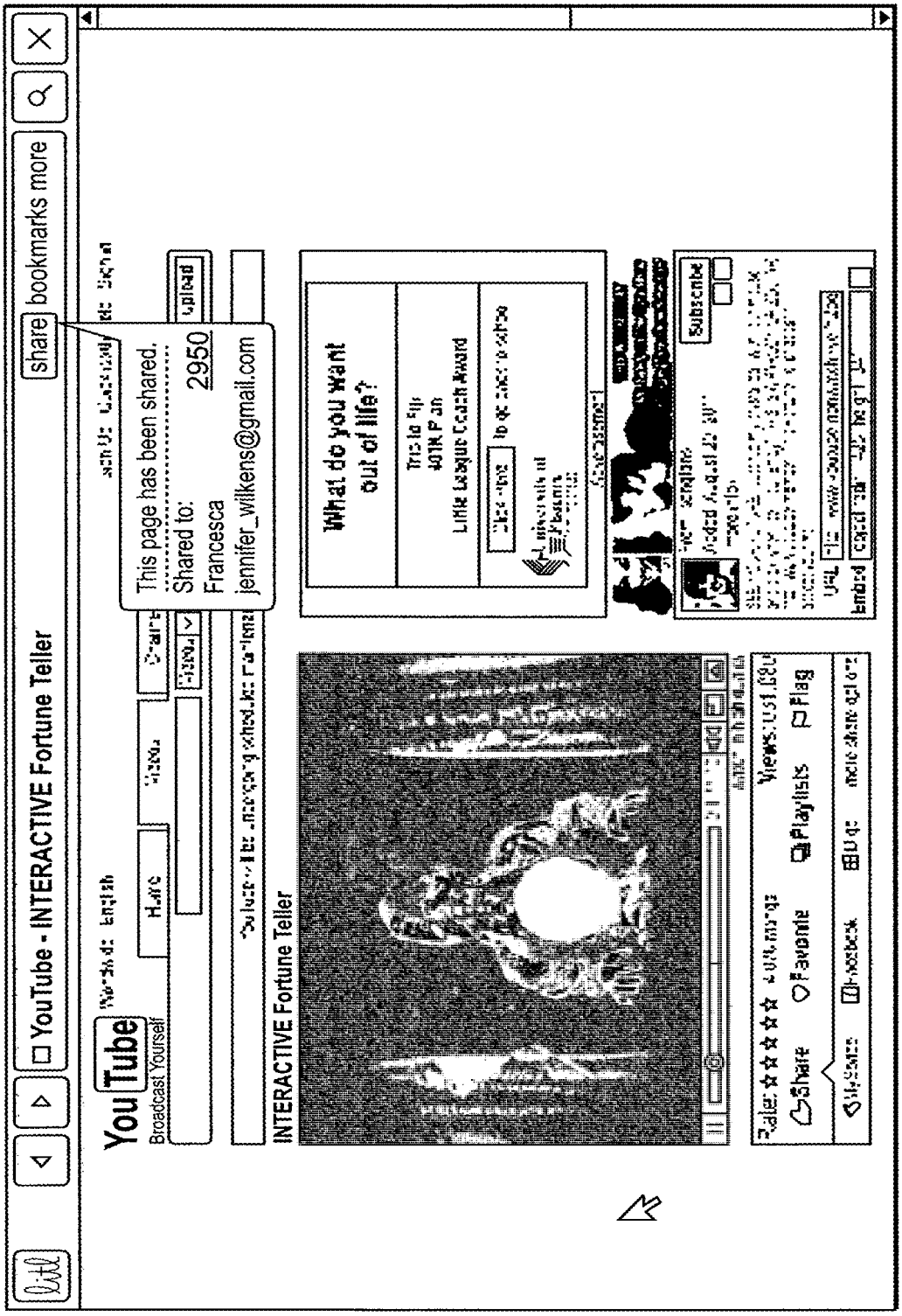
YouTube - INTERACTIVE Fortune Teller
share
bookmarks
more
YouTube
Broadcast Yourself
Home
Upload
This page has been shared.
Shared to:
Francesca
jennifer_wilkens@gmail.com
2950
INTERACTIVE Fortune Teller
What do you want out of life?
Subscribe
Share
Favorite
Playlists
Flag

FIG. 29B

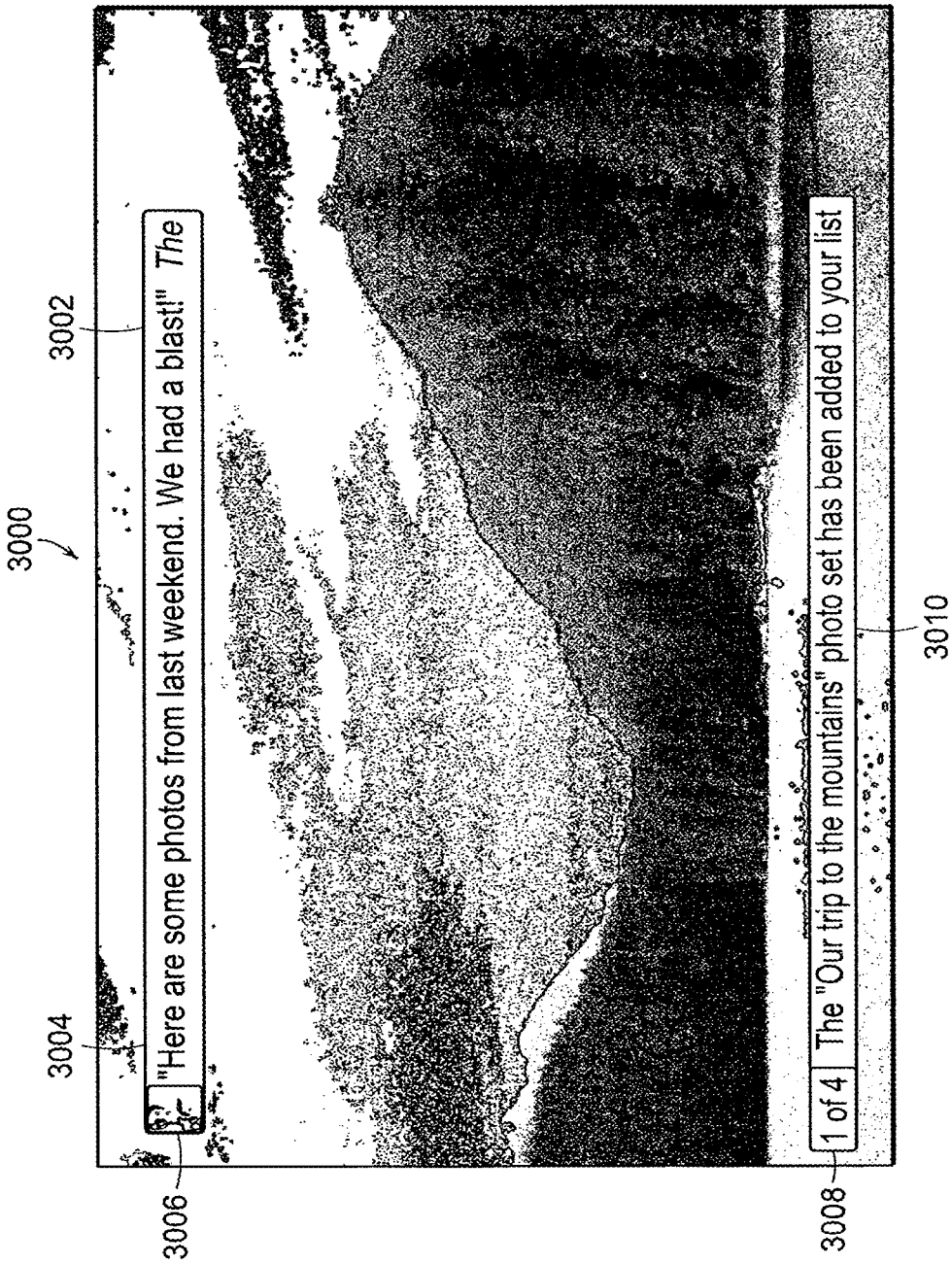
3000
3002
3004
3006
3008
3010
"Here are some photos from last weekend. We had a blast!" The
1 of 4
The "Our trip to the mountains" photo set has been added to your list

FIG. 30

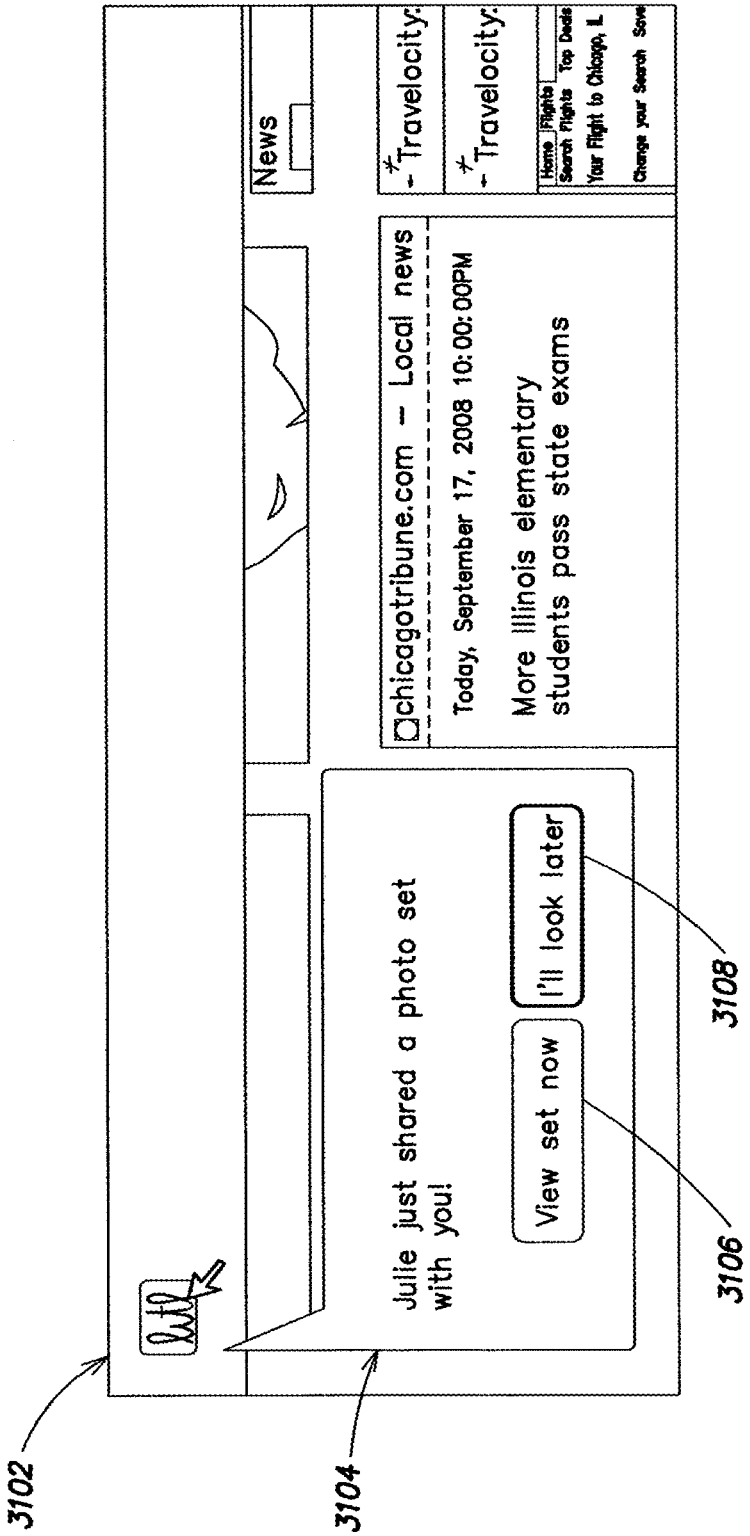
3102
3104
3106
3108
Julie just shared a photo set with you!
View set now
I'll look later
News
chicagotribune.com – Local news
Today, September 17, 2008 10:00:00PM
More Illinois elementary students pass state exams
Travelocity:
Travelocity:
Home
Flights
Search Flights
Top Deals
Your Flight to Chicago, IL
Change your Search
Save

FIG. 31

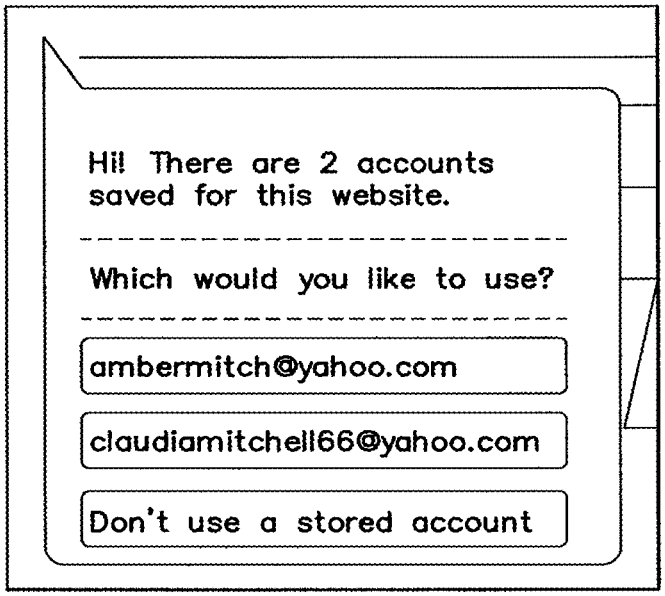
Hi! There are 2 accounts saved for this website.
Which would you like to use?
ambermitch@yahoo.com
claudiamitchell66@yahoo.com
Don't use a stored account

FIG. 32

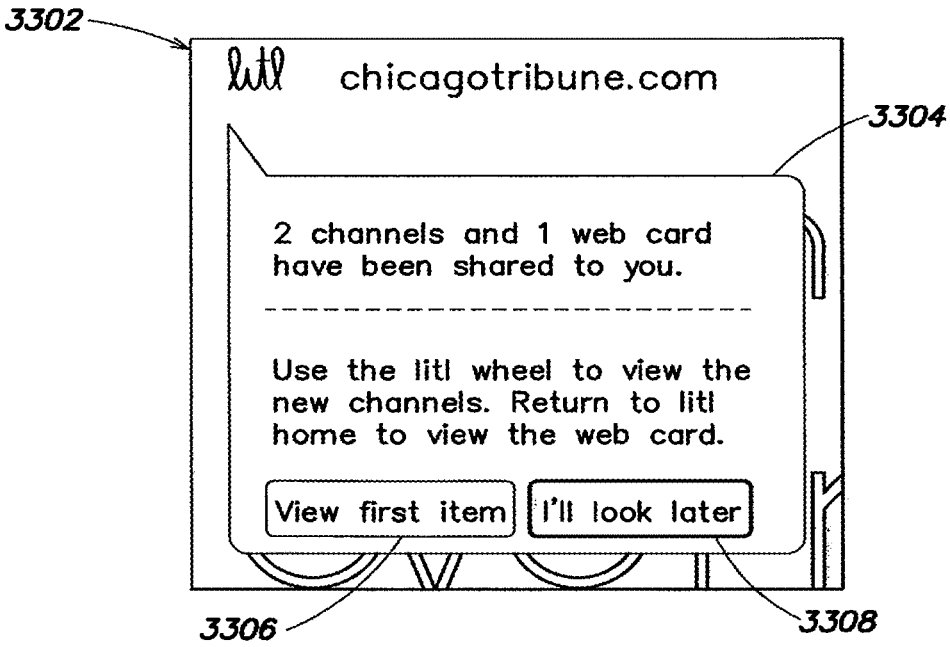
3302
chicagotribune.com
3304
2 channels and 1 web card have been shared to you.
Use the litl wheel to view the new channels. Return to litl home to view the web card.
View first item
I'll look later
3306
3308

FIG. 33

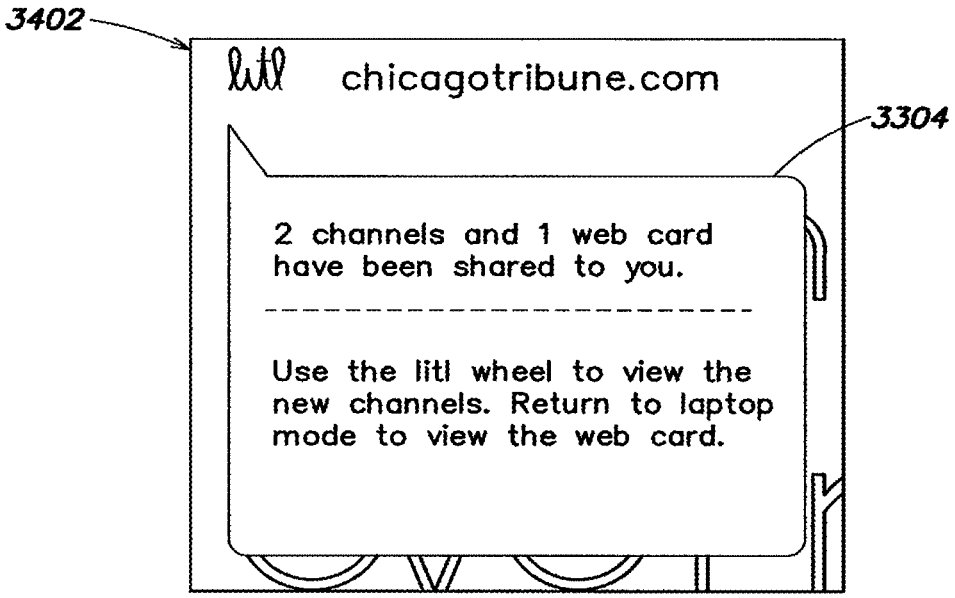
3402
litl
chicagotribune.com
3304
2 channels and 1 web card have been shared to you.
Use the litl wheel to view the new channels. Return to laptop mode to view the web card.

FIG. 34

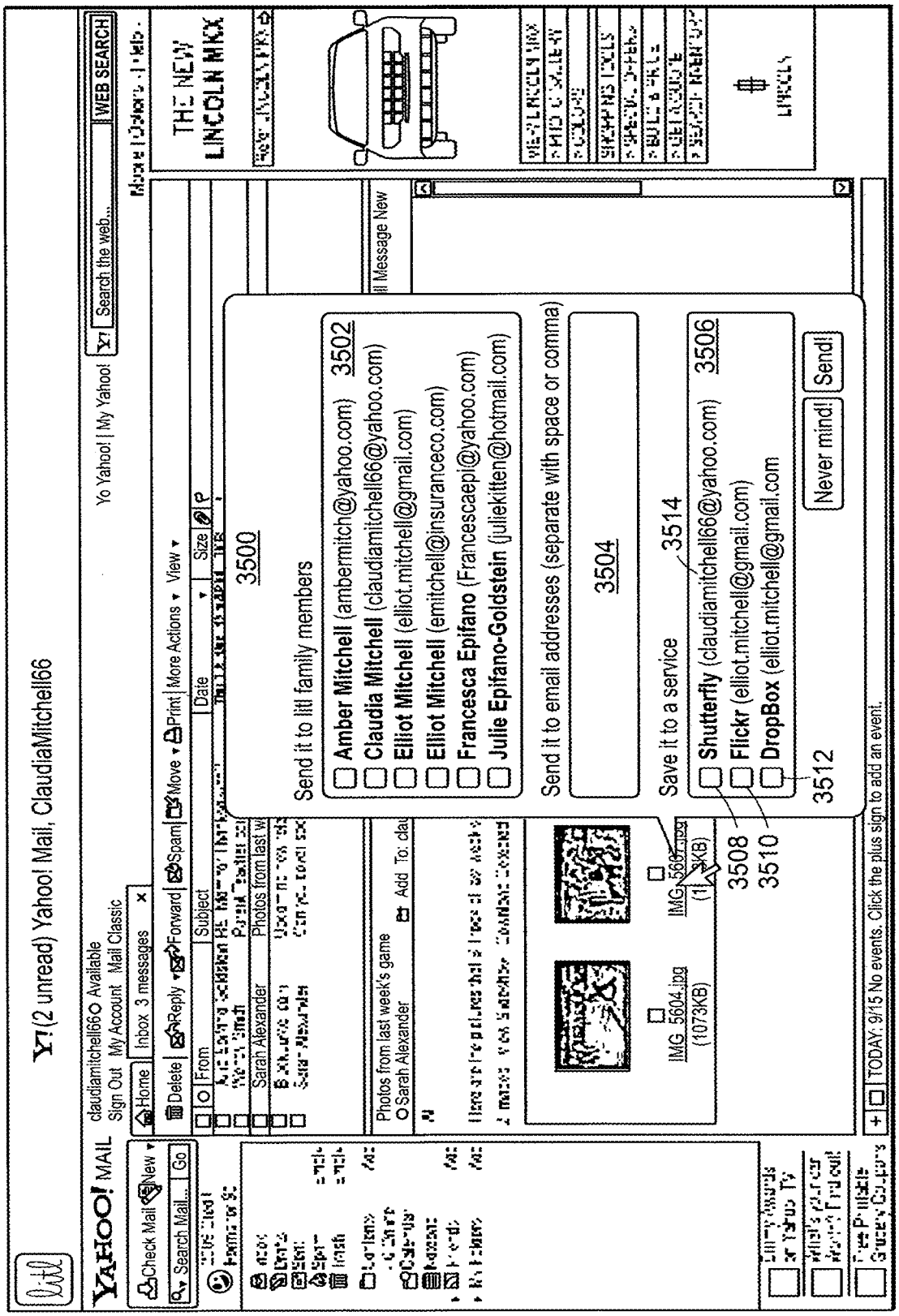
Y! (2 unread) Yahoo! Mail, ClaudiaMitchell66
YAHOO! MAIL
claudiamitchell66 Available
Sign Out My Account Mail Classic
Yo Yahoo! | My Yahoo!
Search the web...
WEB SEARCH
Check Mail
Search Mail...
Go
Home
Inbox 3 messages
Delete
Reply
Forward
Spam
Move
Print
More Actions
View
From
Subject
Date
Size
Sarah Alexander
Photos from last w
Photos from last week's game
Sarah Alexander
Add To: clau
IMG_5604.jpg
(1073KB)
IMG_5697.jpg
3500
Send it to lilil family members
Amber Mitchell (ambermitch@yahoo.com)
Claudia Mitchell (claudiamitchell66@yahoo.com)
Elliot Mitchell (elliot.mitchell@gmail.com)
Elliot Mitchell (emitchell@insuranceco.com)
Francesca Epifano (Francescaepi@yahoo.com)
Julie Epifano-Goldstein (juliekitten@hotmail.com)
3502
Send it to email addresses (separate with space or comma)
3504
Save it to a service
3514
Shutterfly (claudiamitchell66@yahoo.com)
Flickr (elliot.mitchell@gmail.com)
DropBox (elliot.mitchell@gmail.com
3506
3508
3510
3512
Never mind!
Send!
TODAY: 9/15 No events. Click the plus sign to add an event.
THE NEW
LINCOLN MKX

FIG. 35

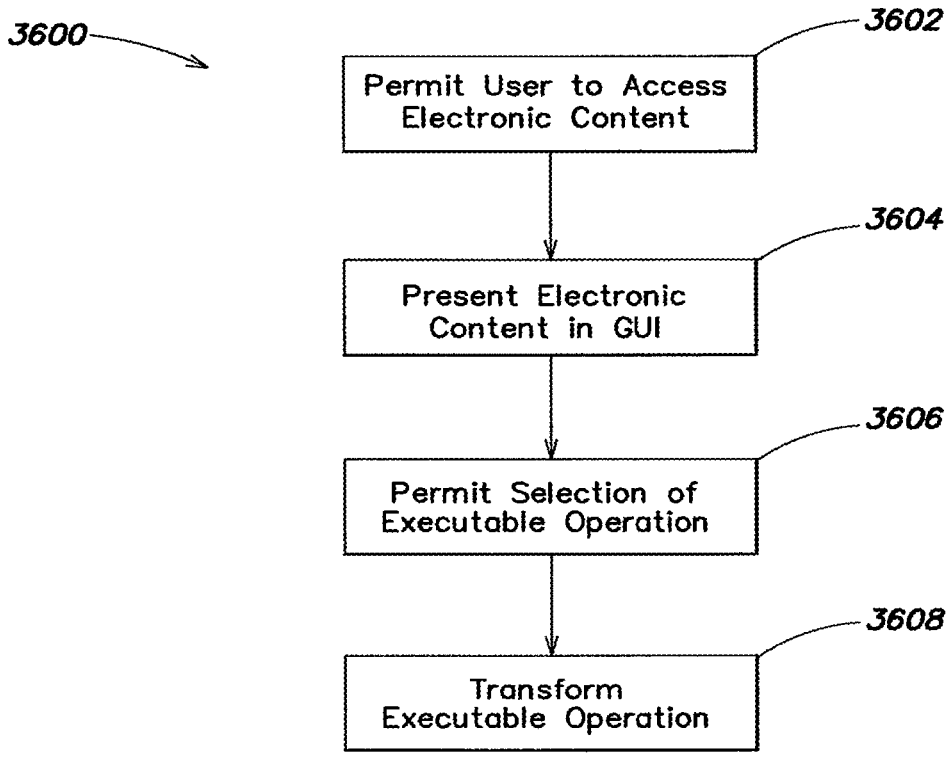
3600
3602
Permit User to Access Electronic Content
3604
Present Electronic Content in GUI
3606
Permit Selection of Executable Operation
3608
Transform Executable Operation

FIG. 36

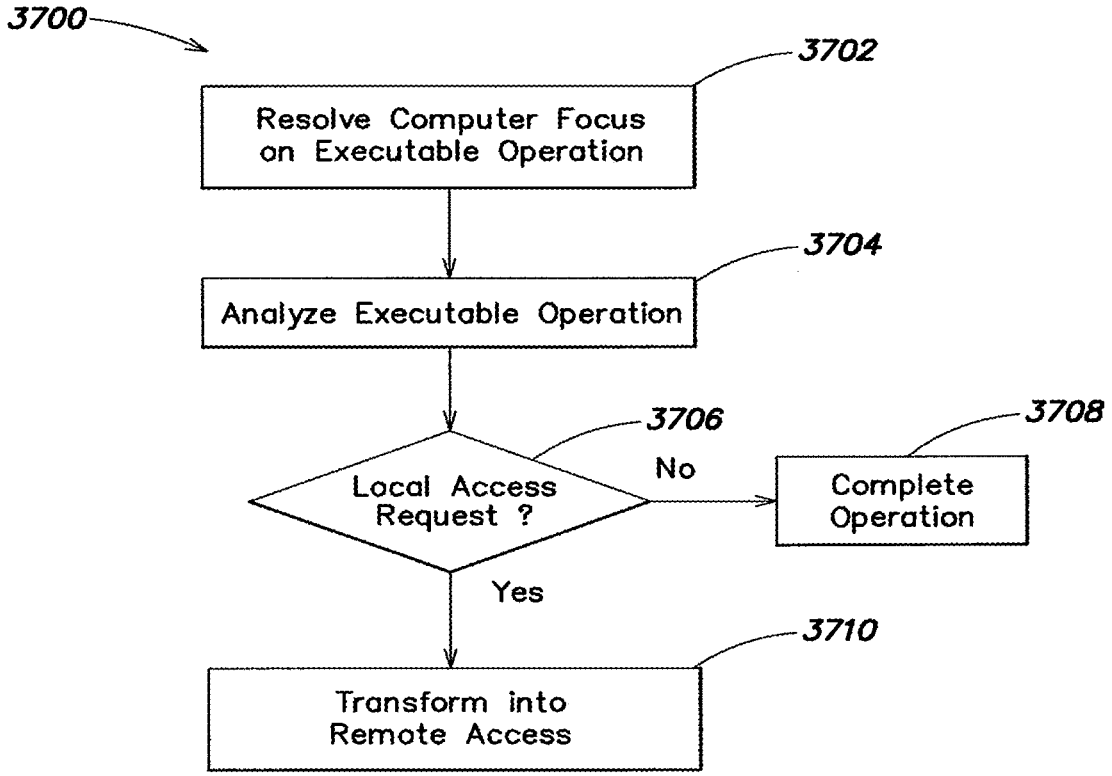
3700
3702
Resolve Computer Focus on Executable Operation
3704
Analyze Executable Operation
3706
Local Access Request ?
No
3708
Complete Operation
Yes
3710
Transform into Remote Access

FIG. 37

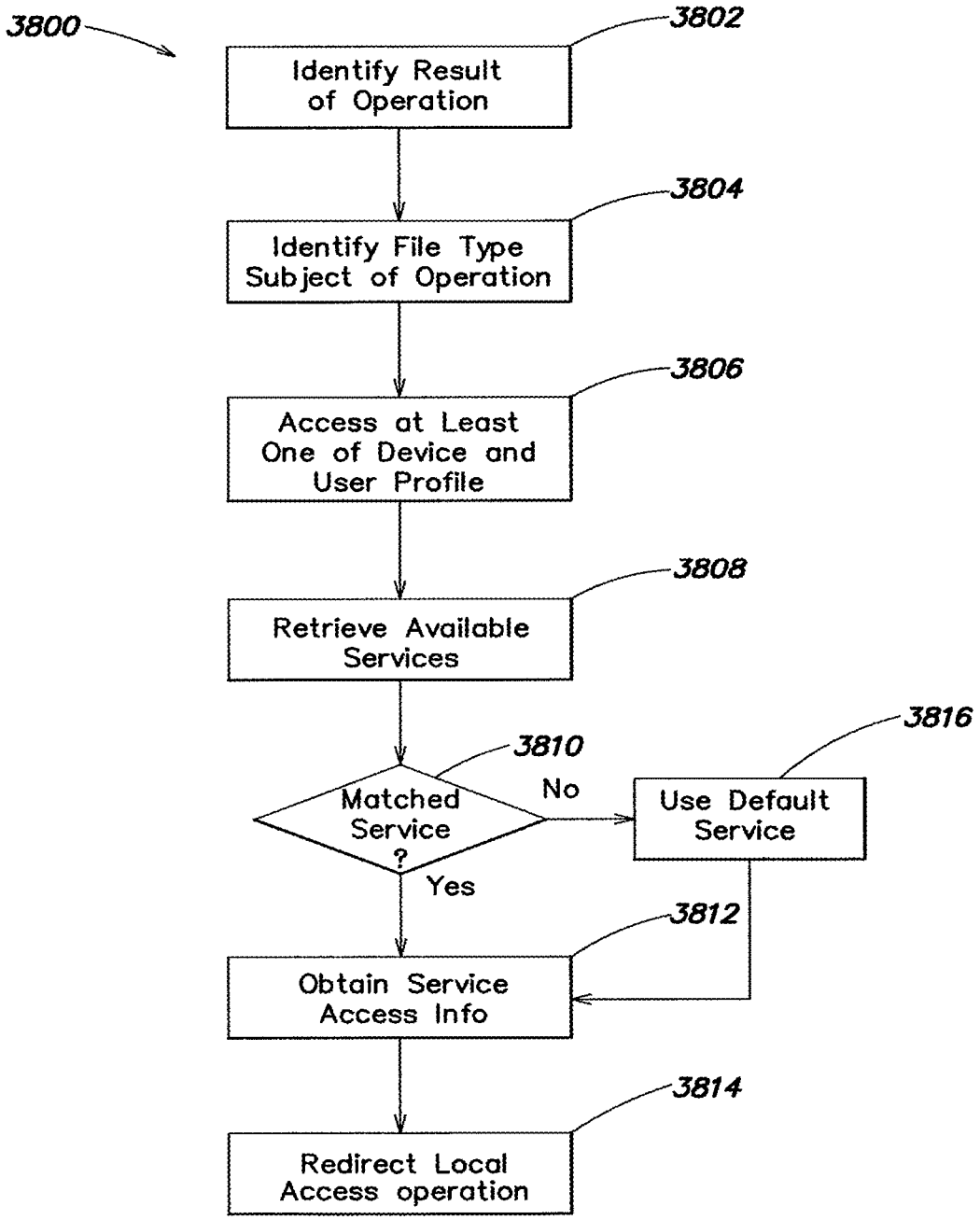
3800
3802
Identify Result of Operation
3804
Identify File Type Subject of Operation
3806
Access at Least One of Device and User Profile
3808
Retrieve Available Services
3810
Matched Service ?
No
Yes
3816
Use Default Service
3812
Obtain Service Access Info
3814
Redirect Local Access operation

FIG. 38

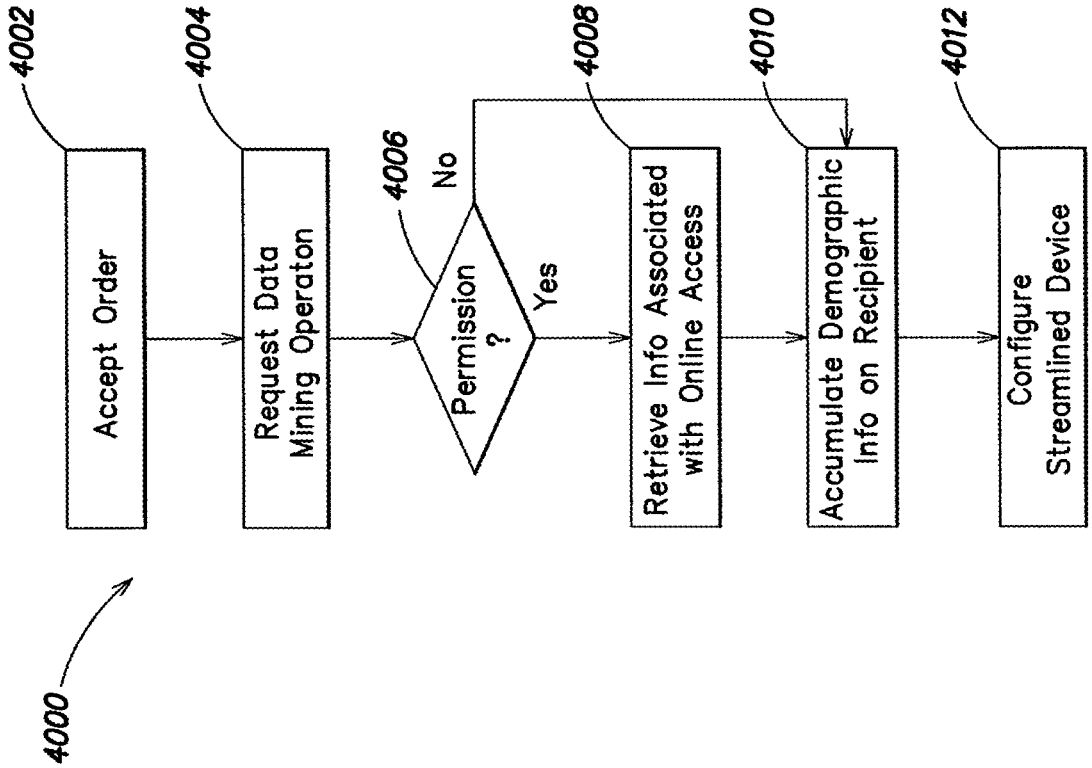
4000
4002
Accept Order
4004
Request Data Mining Operaton
4006
Permission ?
No
Yes
4008
Retrieve Info Associated with Online Access
4010
Accumulate Demographic Info on Recipient
4012
Configure Streamlined Device

FIG. 40

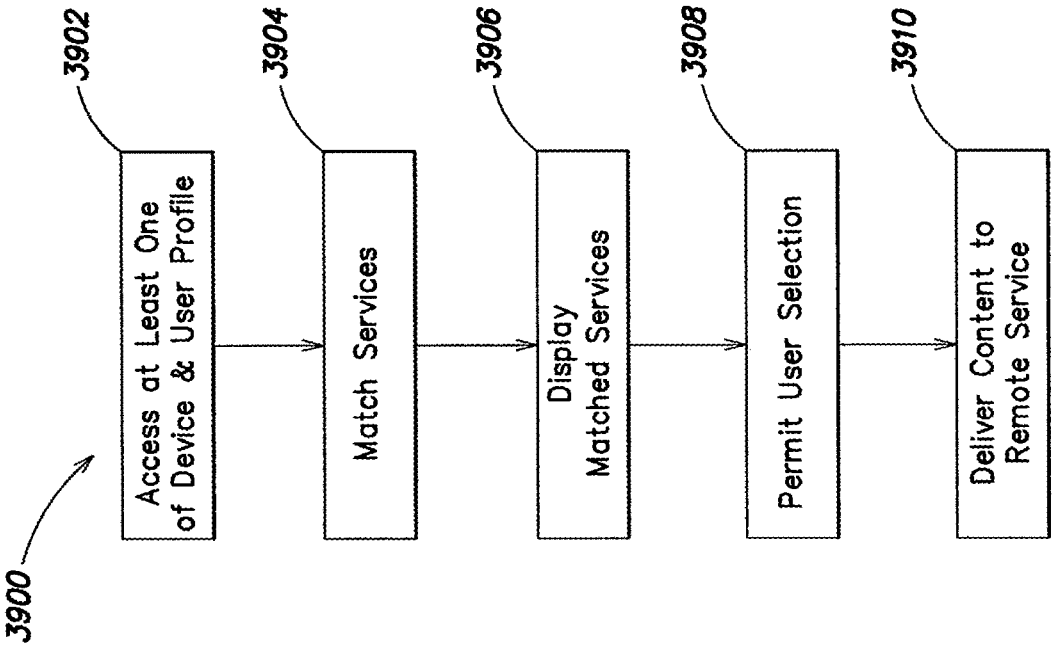
3900
3902
Access at Least One of Device & User Profile
3904
Match Services
3906
Display Matched Services
3908
Permit User Selection
3910
Deliver Content to Remote Service

FIG. 39

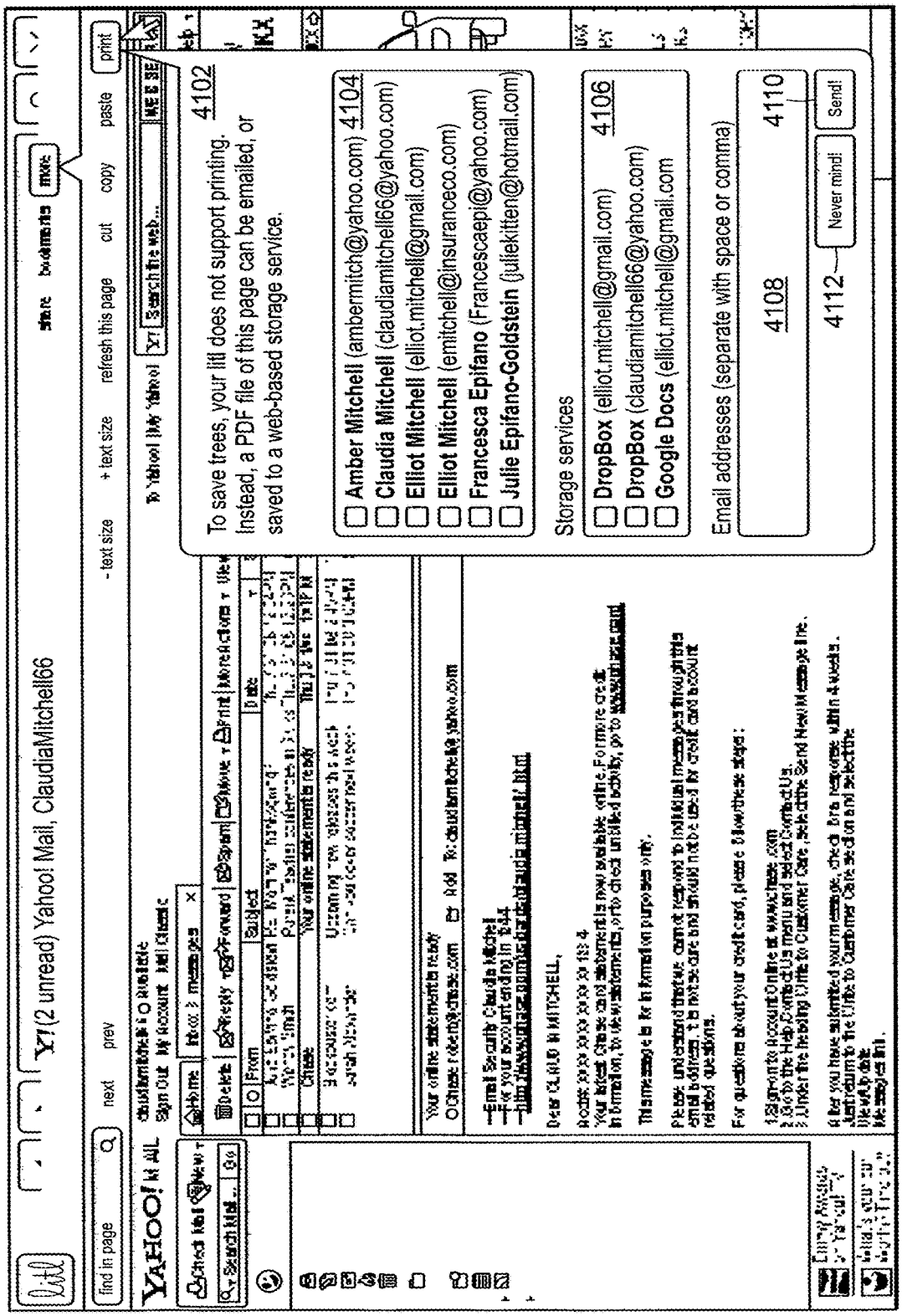
To save trees, your list does not support printing.
Instead, a PDF file of this page can be emailed, or
saved to a web-based storage service.
4102
Amber Mitchell (ambermitch@yahoo.com) 4104
Claudia Mitchell (claudiamitchell66@yahoo.com)
Elliot Mitchell (elliot.mitchell@gmail.com)
Elliot Mitchell (emitchell@insuranceco.com)
Francesca Epifano (Francescaepi@yahoo.com)
Julie Epifano-Goldstein (juliekitten@hotmail.com)
Storage services
DropBox (elliot.mitchell@gmail.com) 4106
DropBox (claudiamitchell66@yahoo.com)
Google Docs (elliot.mitchell@gmail.com
Email addresses (separate with space or comma)
4108
4110
4112
Never mind!
Send!

FIG. 41A

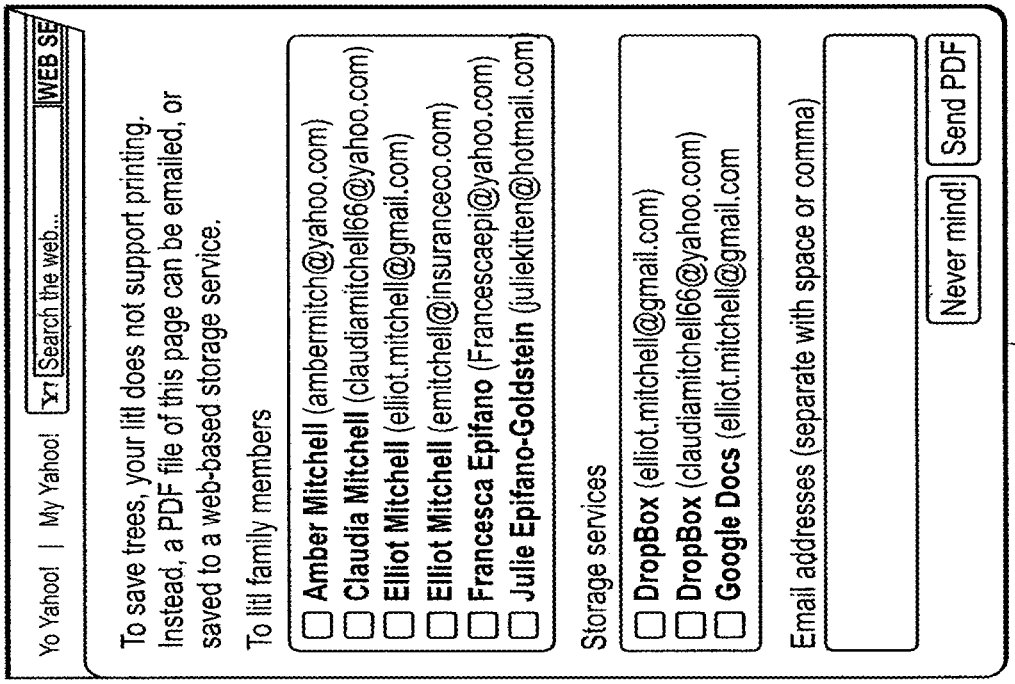
Yo Yahoo! | My Yahoo!
Search the web...
WEB SE
To save trees, your lifl does not support printing. Instead, a PDF file of this page can be emailed, or saved to a web-based storage service.
To lifl family members
Amber Mitchell (ambermitch@yahoo.com)
Claudia Mitchell (claudiamitchell66@yahoo.com)
Elliot Mitchell (elliot.mitchell@gmail.com)
Elliot Mitchell (emitchell@insuranceco.com)
Francesca Epifano (Francescaepi@yahoo.com)
Julie Epifano-Goldstein (juliekitten@hotmail.com)
Storage services
DropBox (elliot.mitchell@gmail.com)
DropBox (claudiamitchell66@yahoo.com)
Google Docs (elliot.mitchell@gmail.com
Email addresses (separate with space or comma)
Never mind!
Send PDF
4150

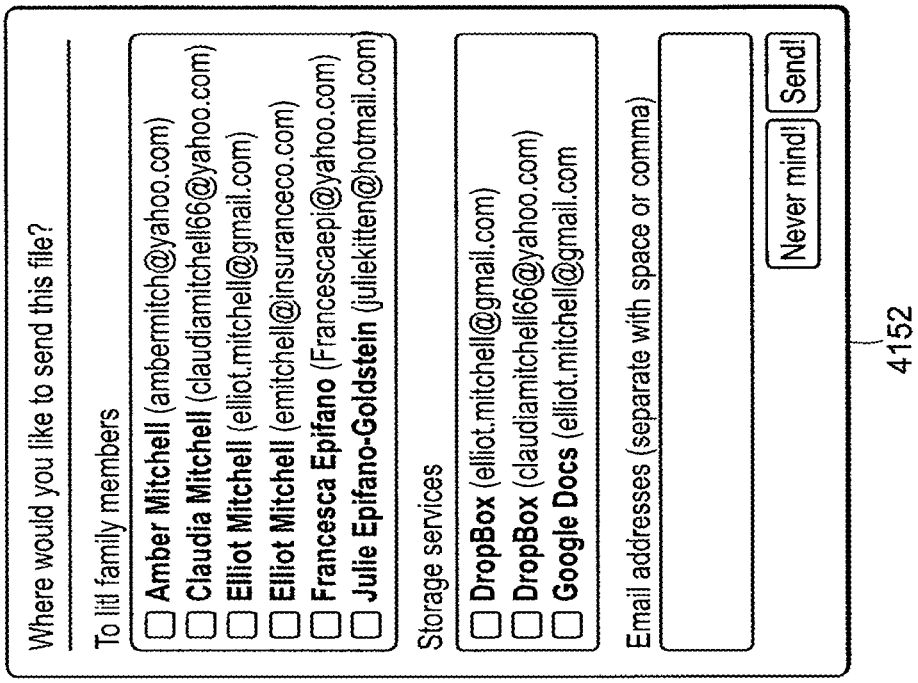
Where would you like to send this file?
To lifl family members
Amber Mitchell (ambermitch@yahoo.com)
Claudia Mitchell (claudiamitchell66@yahoo.com)
Elliot Mitchell (elliot.mitchell@gmail.com)
Elliot Mitchell (emitchell@insuranceco.com)
Francesca Epifano (Francescaepi@yahoo.com)
Julie Epifano-Goldstein (juliekitten@hotmail.com)
Storage services
DropBox (elliot.mitchell@gmail.com)
DropBox (claudiamitchell66@yahoo.com)
Google Docs (elliot.mitchell@gmail.com
Email addresses (separate with space or comma)
Never mind!
Send!
4152

FIG. 41B

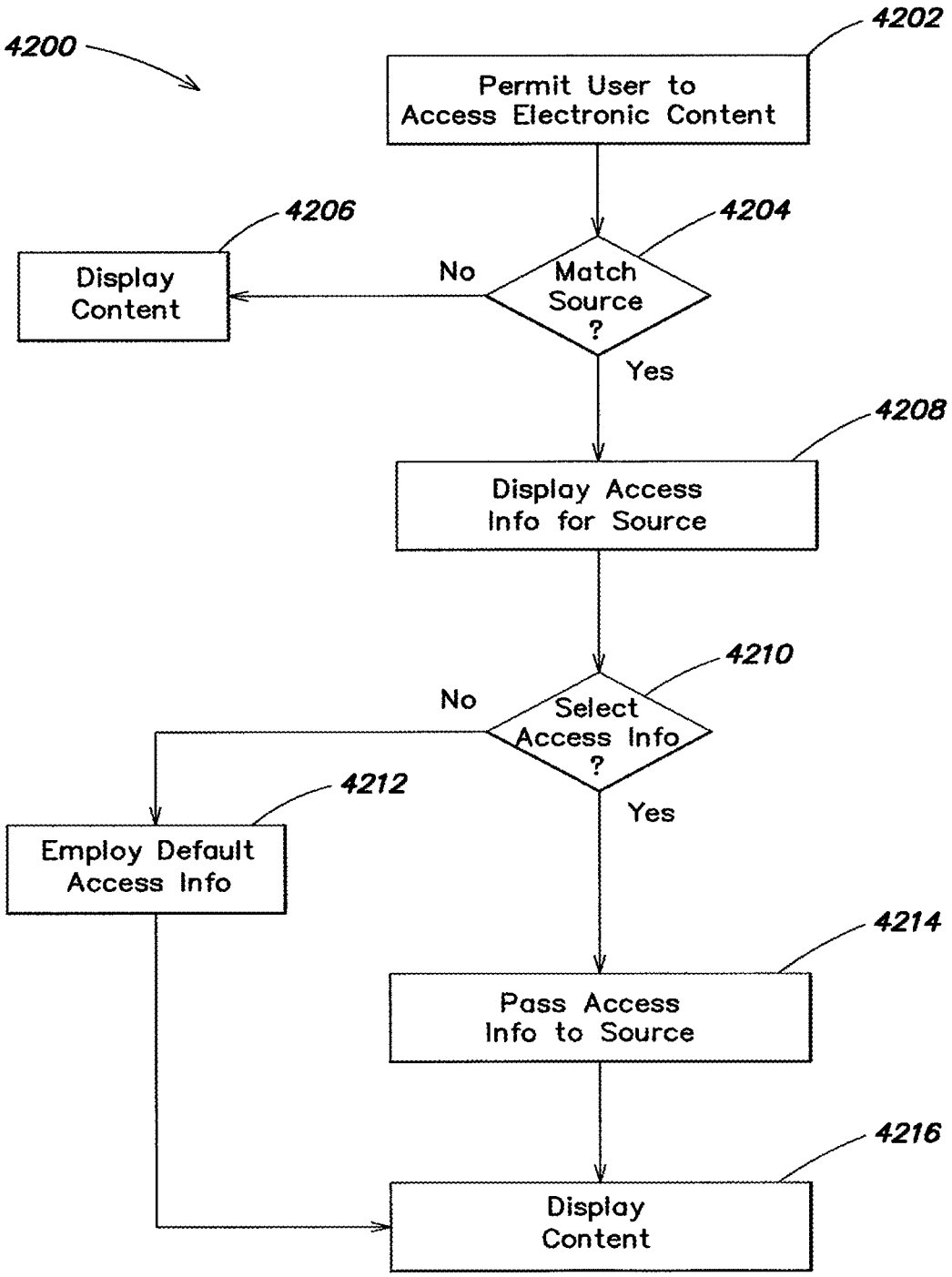
4200
4202
Permit User to Access Electronic Content
4204
Match Source ?
No
4206
Display Content
Yes
4208
Display Access Info for Source
4210
Select Access Info ?
No
4212
Employ Default Access Info
Yes
4214
Pass Access Info to Source
4216
Display Content

FIG. 42

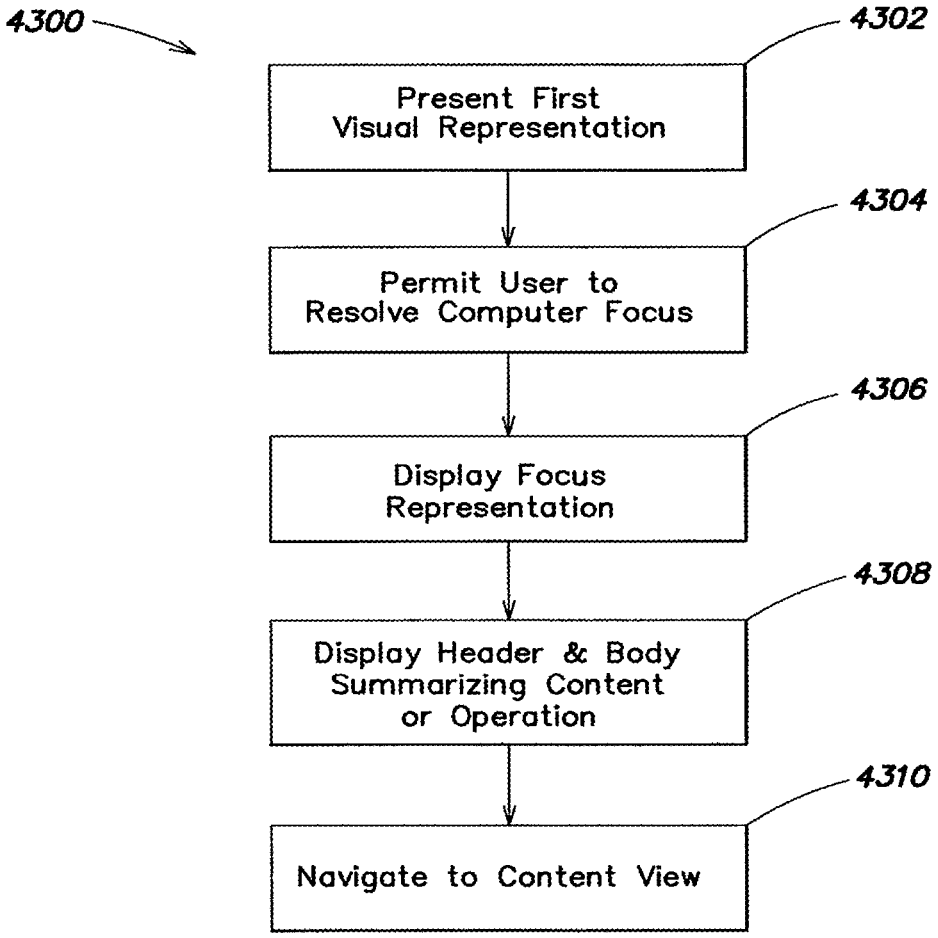
4300
4302
Present First Visual Representation
4304
Permit User to Resolve Computer Focus
4306
Display Focus Representation
4308
Display Header & Body Summarizing Content or Operation
4310
Navigate to Content View

FIG. 43

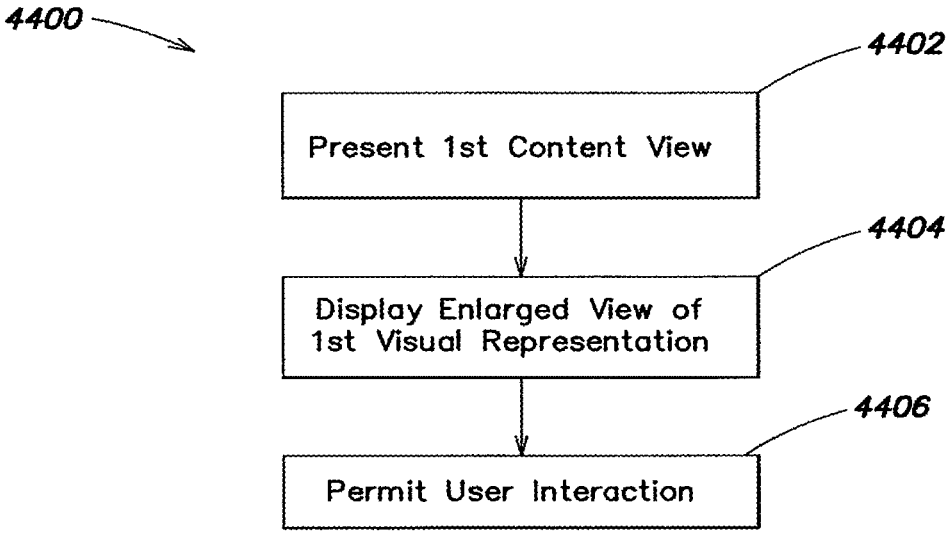
4400
4402
Present 1st Content View
4404
Display Enlarged View of 1st Visual Representation
4406
Permit User Interaction

FIG. 44

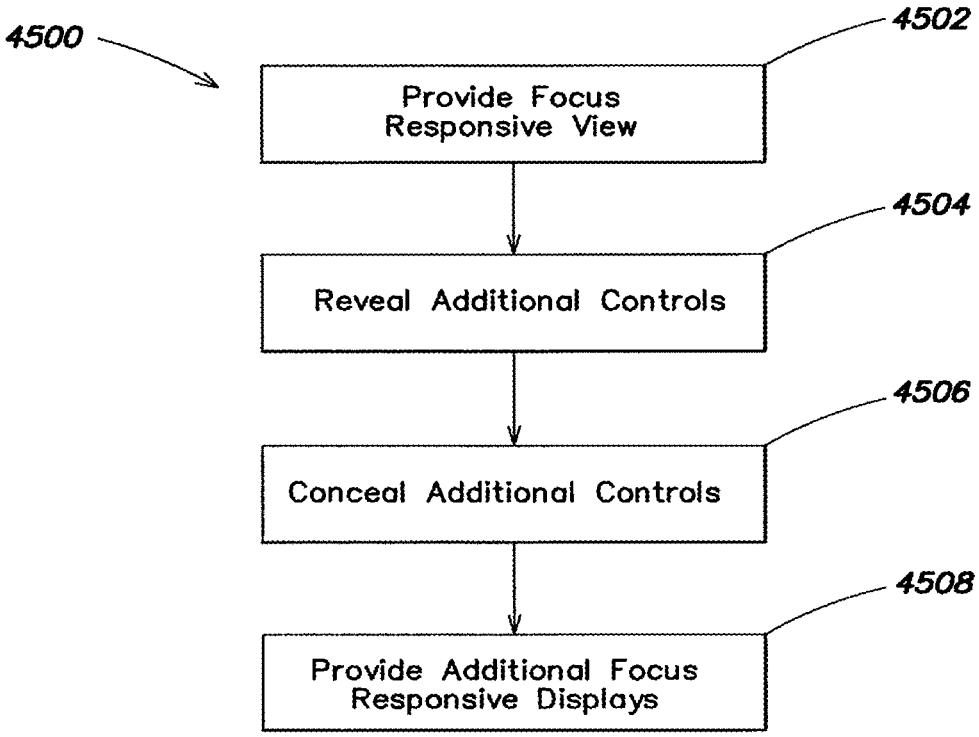
4500
4502
Provide Focus Responsive View
4504
Reveal Additional Controls
4506
Conceal Additional Controls
4508
Provide Additional Focus Responsive Displays

FIG. 45

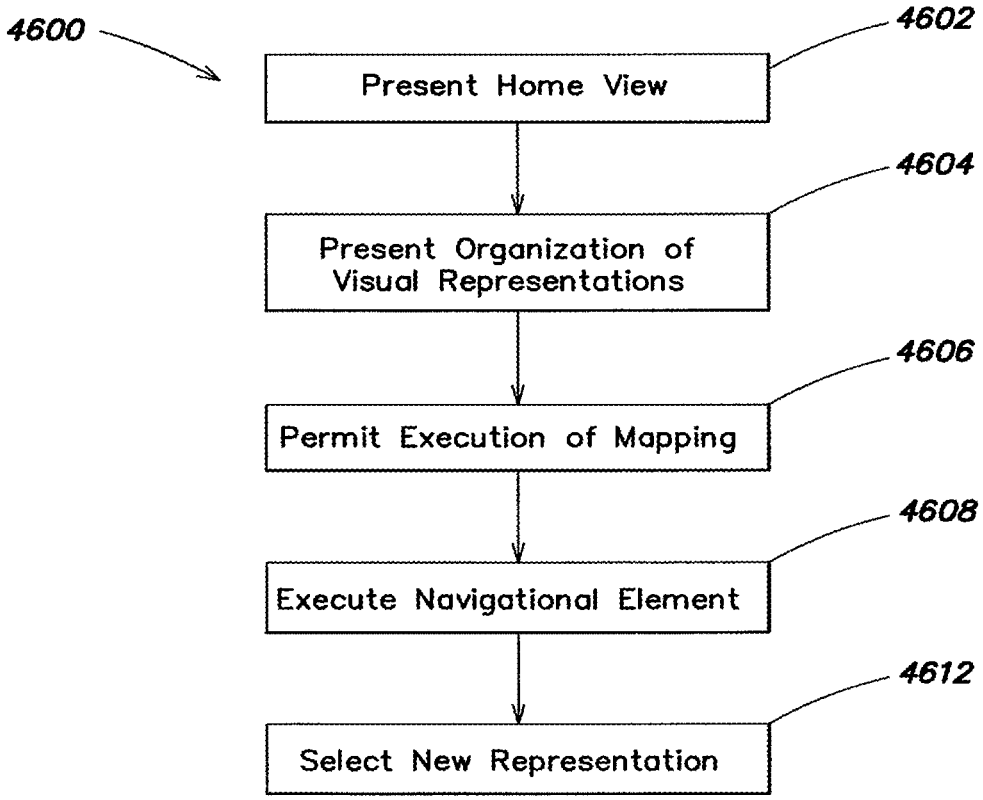
4600
4602
Present Home View
4604
Present Organization of Visual Representations
4606
Permit Execution of Mapping
4608
Execute Navigational Element
4612
Select New Representation

FIG. 46

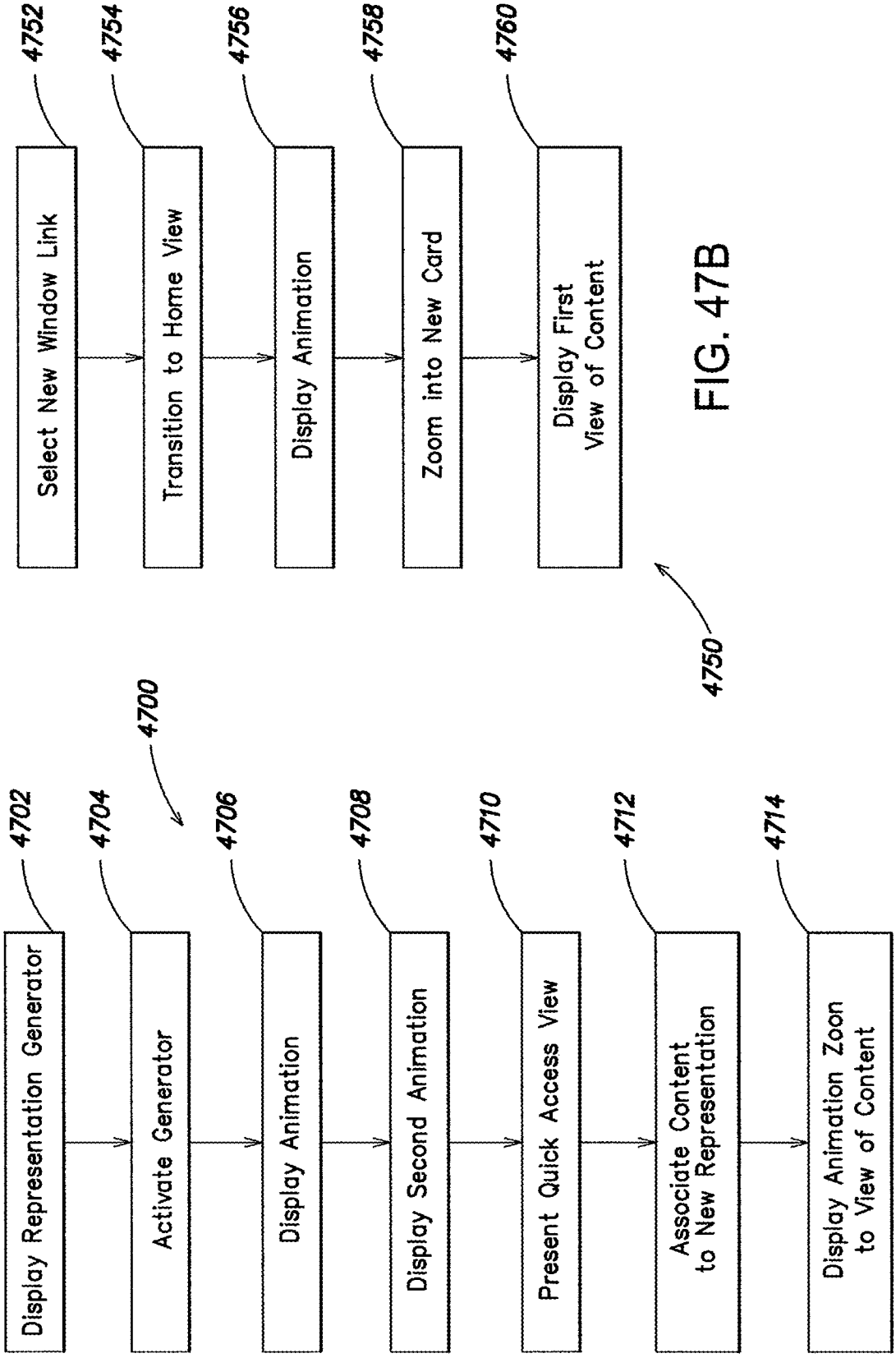

FIG. 47B

FIG. 47A

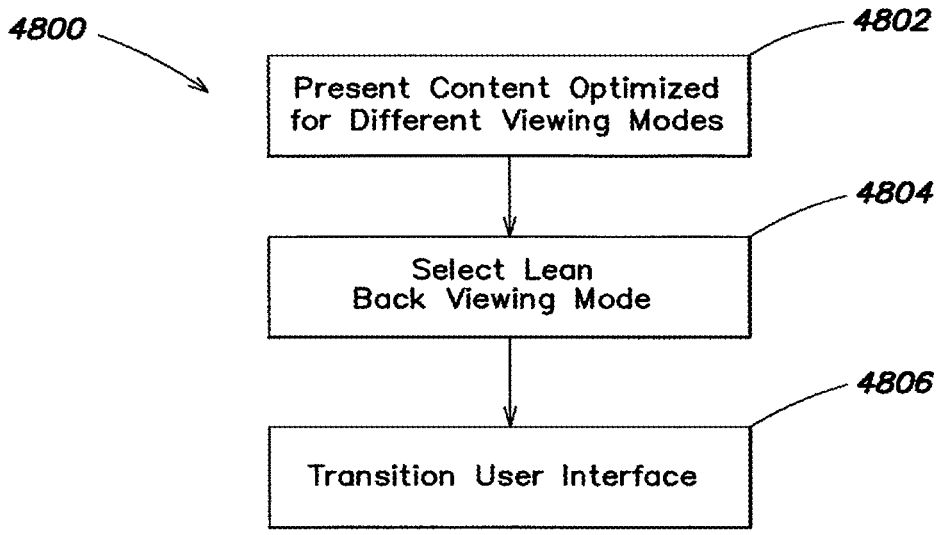

FIG. 48

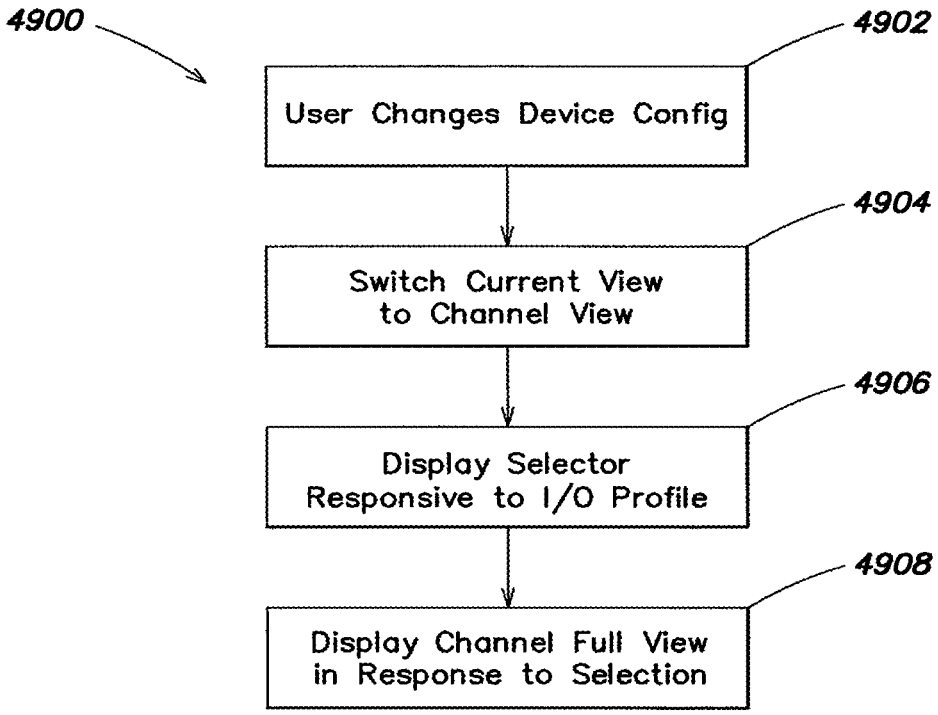

FIG. 49A

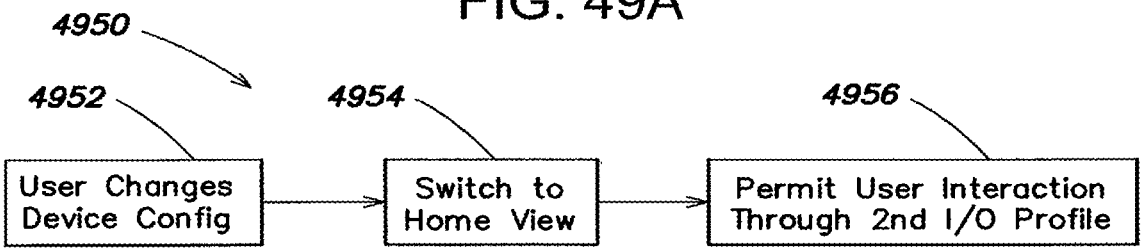

FIG. 49B

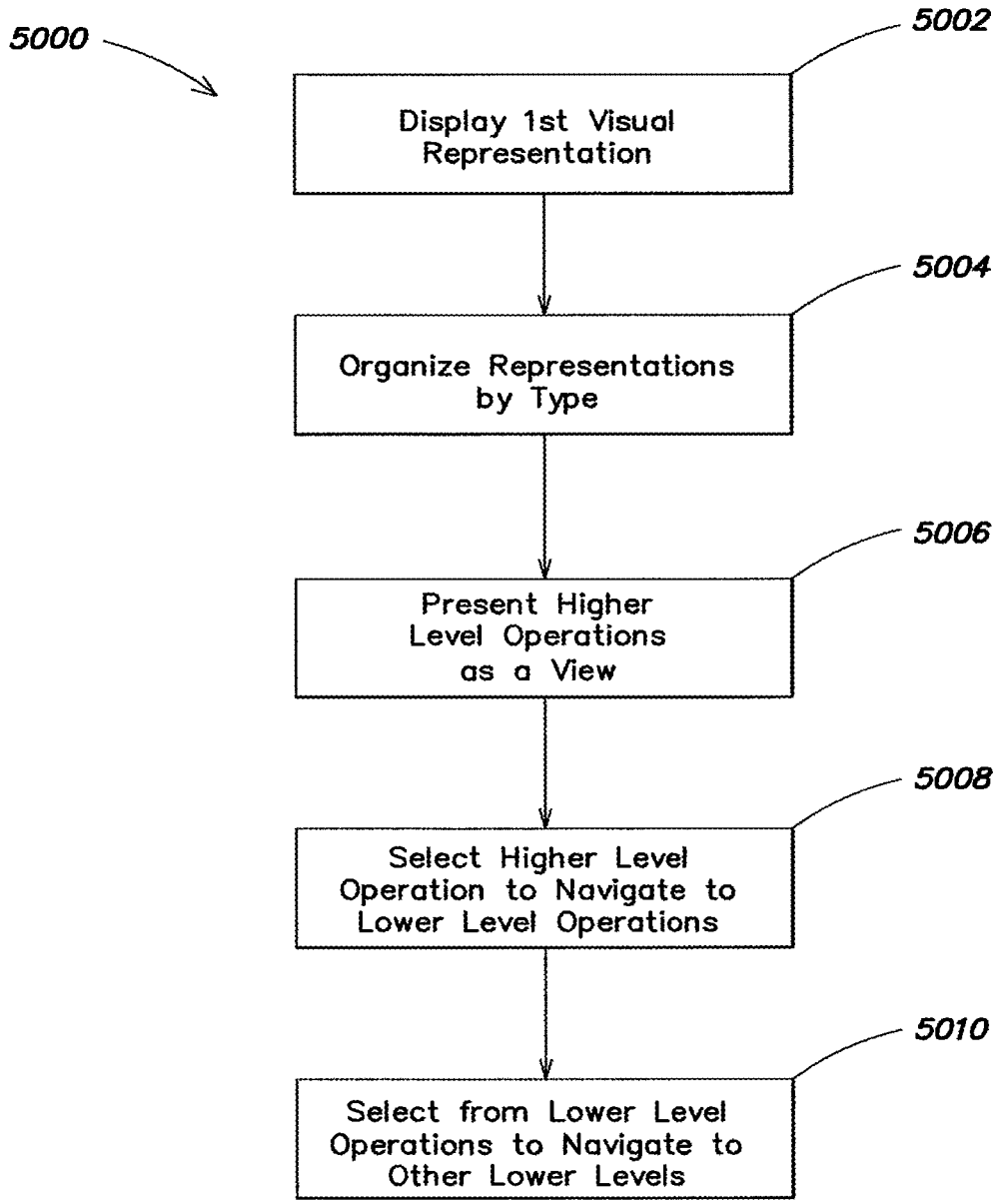
5000
5002
Display 1st Visual Representation
5004
Organize Representations by Type
5006
Present Higher Level Operations as a View
5008
Select Higher Level Operation to Navigate to Lower Level Operations
5010
Select from Lower Level Operations to Navigate to Other Lower Levels

FIG. 50

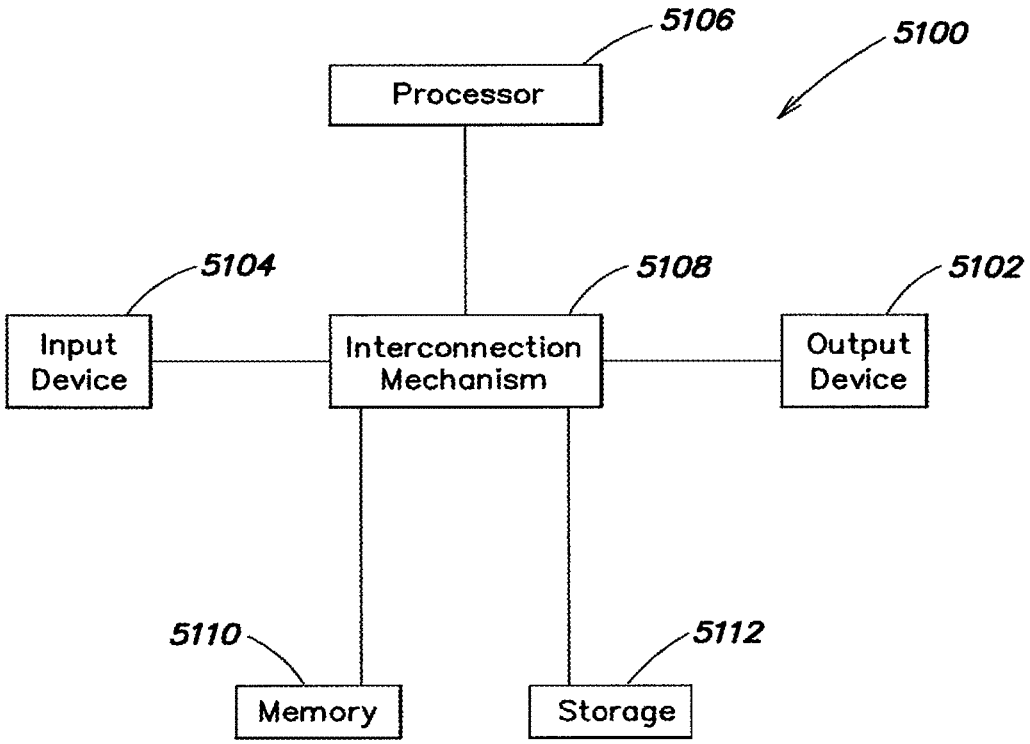
5106
5100
Processor
5104
5108
5102
Input Device
Interconnection Mechanism
Output Device
5110
5112
Memory
Storage

FIG. 51

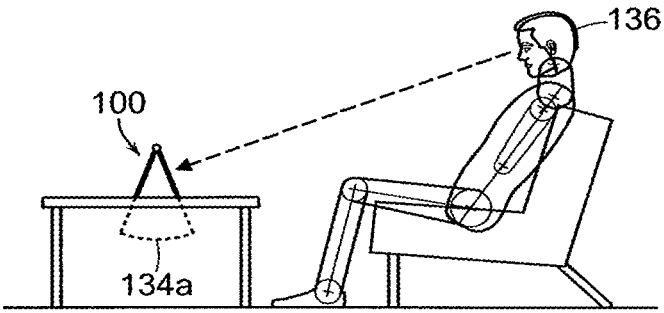

FIG. 52A

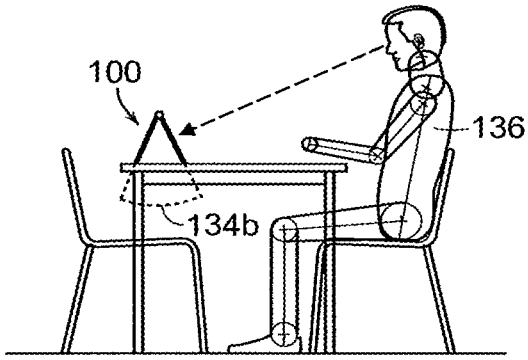

FIG. 52B

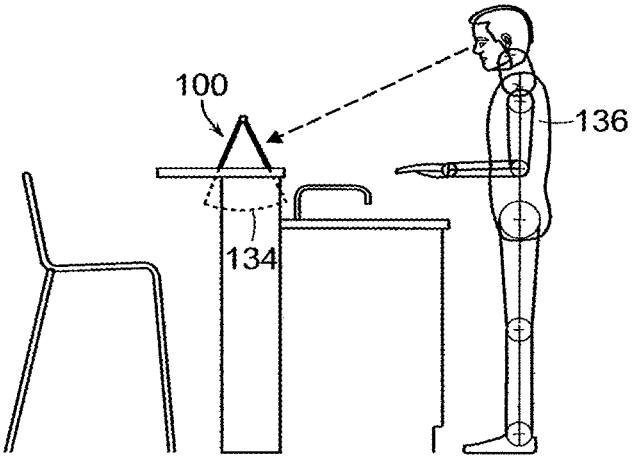

FIG. 52C

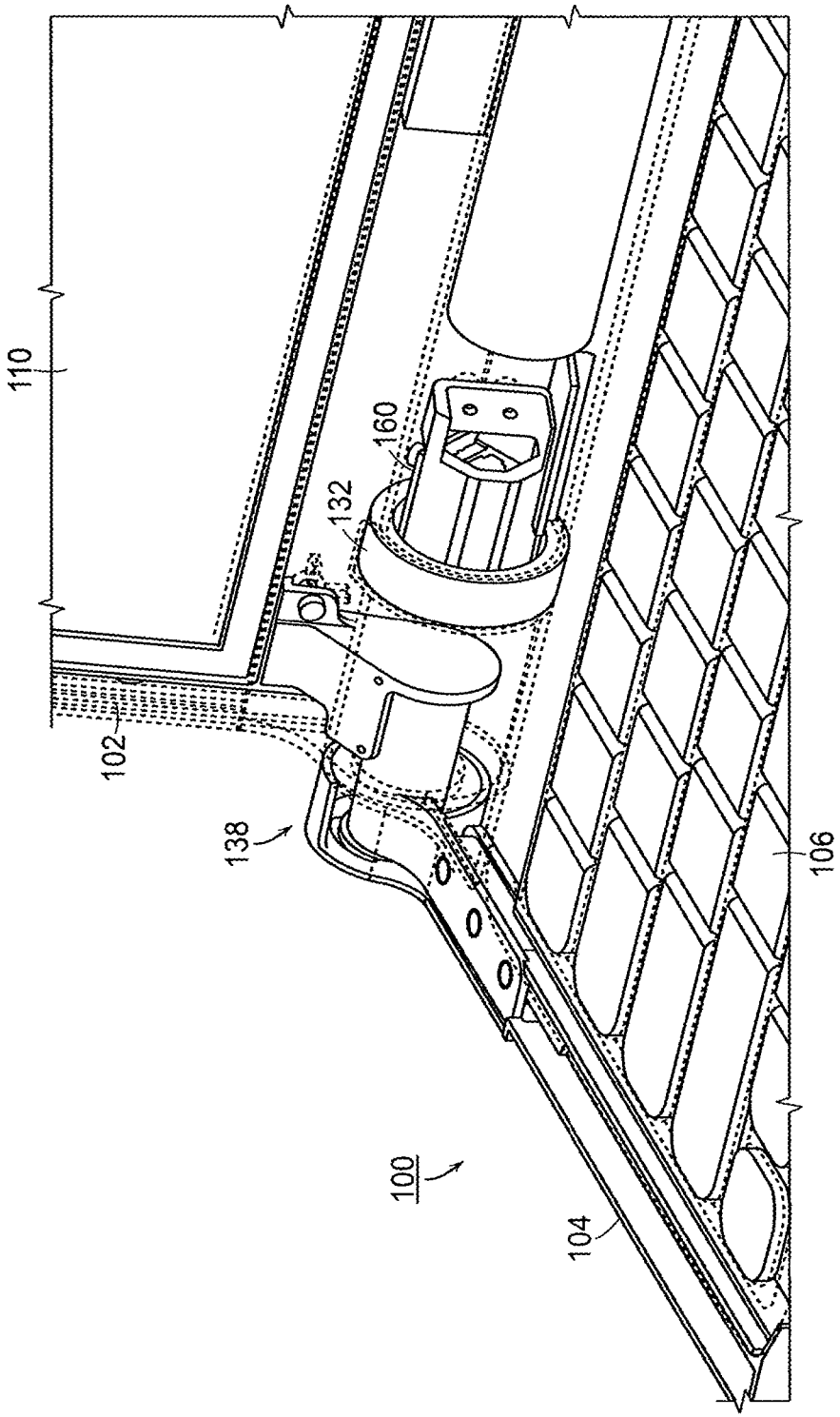

FIG. 53A

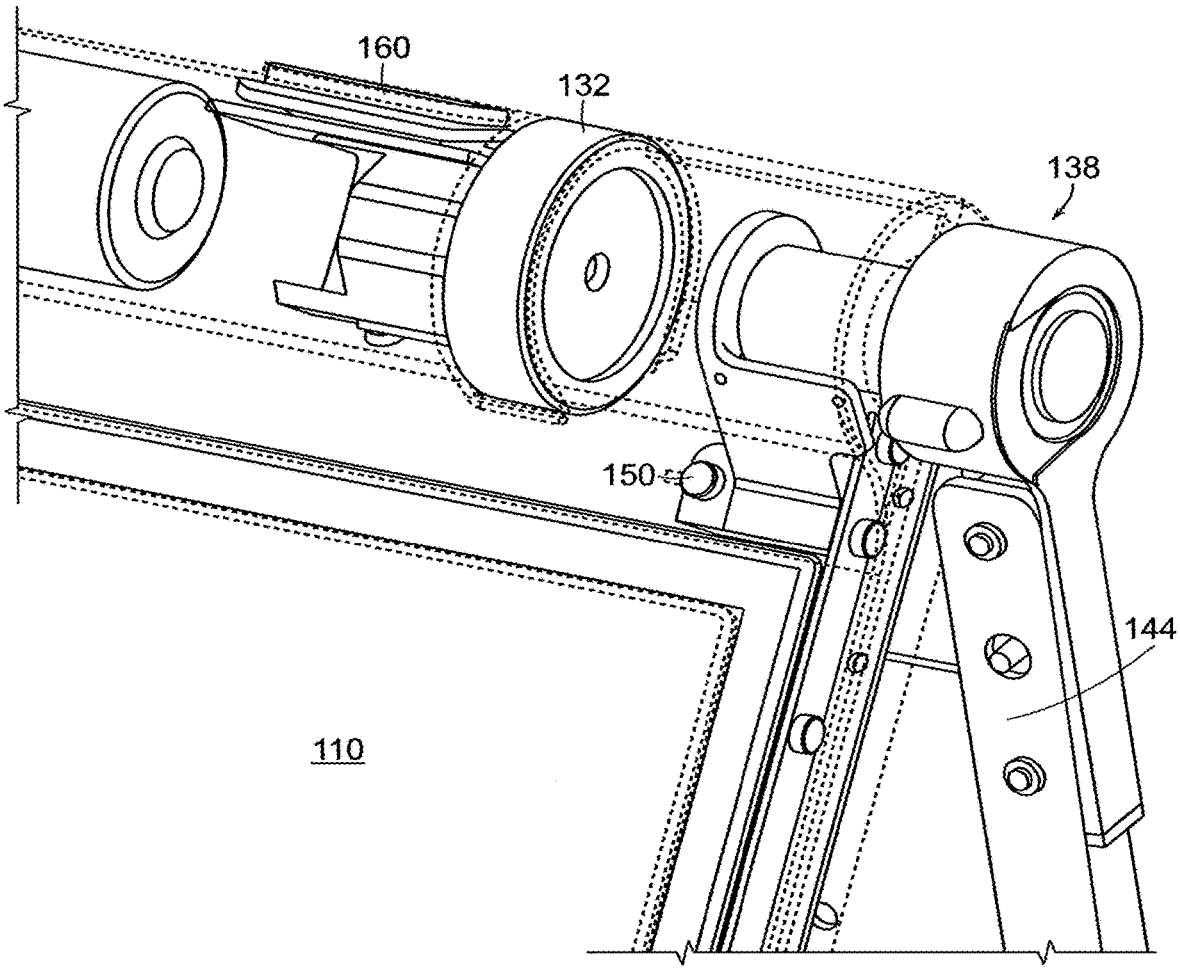

FIG. 53B

SYSTEM AND METHOD FOR STREAMLINING USER INTERACTION WITH ELECTRONIC CONTENT

RELATED APPLICATIONS

This Application is a continuation of, and claims priority under 35 U.S.C. § 120 to, U.S. application Ser. No. 14/680,422, entitled "SYSTEM AND METHOD FOR STREAMLINING USER INTERACTION WITH ELECTRONIC CONTENT" filed on Apr. 7, 2015, which is a continuation of, and claims priority under 35 U.S.C. § 120 to, U.S. patent application Ser. No. 12/416,496 entitled "SYSTEM AND METHOD FOR STREAMLINING USER INTERACTION WITH ELECTRONIC CONTENT," filed on Apr. 1, 2009, which is a continuation-in-part of, and claims priority under 35 U.S.C. § 120 to, U.S. patent application Ser. No. 12/170,951 entitled "PORTABLE COMPUTER WITH MULTIPLE DISPLAY CONFIGURATIONS," filed on Jul. 10, 2008, which claims priority under 35 U.S.C. § 119(e) to U.S. Provisional Application Ser. No. 61/041,365, entitled "PORTABLE COMPUTER WITH MULTIPLE DISPLAY CONFIGURATIONS," filed Apr. 1, 2008, each of which is hereby incorporated herein by reference in its entirety. U.S. patent application Ser. No. 12/416,496 is also a continuation-in-part of, and claims priority under 35 U.S.C. § 120 to U.S. patent application Ser. No. 12/170,939, entitled "PORTABLE COMPUTER WITH MULTIPLE DISPLAY CONFIGURATIONS," filed on Jul. 10, 2008, which claims priority under 35 U.S.C. 119(e) to U.S. Provisional Application Ser. No. 61/041,365, entitled "PORTABLE COMPUTER WITH MULTIPLE DISPLAY CONFIGURATIONS," filed Apr. 1, 2008, each of which is hereby incorporated herein by reference in its entirety. In addition, U.S. patent application Ser. No. 12/416,496 also claims priority under 35 U.S.C. 119(e) to U.S. Provisional Application Ser. No. 61/041,365, entitled "PORTABLE COMPUTER WITH MULTIPLE DISPLAY CONFIGURATIONS," filed Apr. 1, 2008, which is hereby incorporated herein by reference in its entirety.

BACKGROUND

Much of the advancement in contemporary computer systems and services stems from the significant increases in computing power. Hand in hand with those increases, enhanced features sets have developed designed to utilize that computing power. Conventional wisdom suggests that the more features that can be provided to a particular computer user, the better the user's experience will be.

As computers have become more powerful and capable of providing more and more features, ordinary/typical computer users has not been able to keep up with availability of features and services. User may become frustrated by the inability to navigate the myriad (sometime unending) configurations and options provided in order to achieve something useful and/or workable to their ordinary use. Many users simply don't take advantage of provided features. Some outright ignore options and features that would simplify the use of their computer system. This may occur because of user ignorance or even fear and in some instances because the user lacks experience with new features—so the user doesn't know the feature can be useful.

User frustration is felt not only with respect to the newer more powerful computer systems being offered today, but also frustration abounds with respect to their computer's interaction with the Internet. The present movement on the

Internet, often referred to as Web 2.0, also subscribes to conventional thinking in that more and more features are being packed into each and every aspect of the web experience. Third party service providers can be found for almost any service—virtually no limitations have been found for the services that can be provided.

More typically, these on-line services provide very useful opportunities for the users who know how to take advantage of them—online photo management/sharing, online financial services, online marketplaces, online exchanges, web hosting, web development, dating services, social networking to name only a few. Very often these on-line services can be found for free or minimal costs. Typically, registration is the only requirement for participating in what is offered as free services. In other words, all that is required is the creation of a user name and password. Each service often attempts to outdo competitors by offering more and more options/features than their competitors.

SUMMARY

It is realized that the conventional wisdom with respect to such "feature packing" as discussed above suffers from significant flaws. Typical computer users simply can't take advantage of all the functionality offered, either the services and features offered by their own computer, or the services and features offered by online providers. The complexity of the interface (both hardware and software) hampers adoption, as does the volume of features offered. For example, third party service provides often find difficulty in subscribing new users, educating existing users, and providing integration of feature sets for the features they provide as well as those offered by other service providers.

Further complicating the user's interaction with computer devices and provided services is the inflexibility of the devices being used and their accompanying interfaces. It is realized that a device that can provide a user with a flexible portal into electronic content, that is, one that can be configured dynamically improves the user experience. For example, permitting transitions from a "lean back" mode of viewing (imagine, for example, a person watching television from their couch) to a "lean forward" mode of viewing (picture, for example, a laptop user typing away in a word processing application) on a computer device improves the user experience. Further, user interfaces that are responsive to the user's dynamic configurations improve the user's ability to interact with the electronic content, from the machine itself, the internet, and even from both sources.

Accordingly, aspects and embodiments are directed to a graphical user interface that organizes interface elements into modes of content for presentation to a user. Different views of the modes of content are used to present the user with an interface that is responsive to configurations of the device and responsive to activity being performed by the user. Further the elements that comprise the graphical user interface are configured to present a summarized view of available actions and content, in order to simplify user interaction. The different views present different organizations of the interface elements and in some example display only certain ones of the modes of content in order to reduce the number of options a user must navigate to accomplish an objective.

According to one aspect of the present invention, a customized user interface for a computer system with a plurality selectable I/O profiles configured to present computer operations to a user in a format configured to a selected I/O profile is provided. The user interface comprises a map

based graphical user interface displayed on the computer system, the map based user interface comprising a plurality of views of a plurality of visual representations of computer content, wherein the computer content includes at least one of selectable digital content, selectable computer operations and passive digital content, and the plurality of visual representations of computer content rendered on the computer display, wherein the plurality of visual representations of computer content include an association to a first view of the plurality of views, the first view including the computer content, and wherein the each of the plurality of visual representations is responsive to focus and execution, wherein execution includes clicking on the visual representation, and an execution component comprising at least one computer hardware element configured to transition the computer system display between the plurality of views, wherein the execution component further comprises a view selector component configured to select one of the plurality of views for display on a computer system in response to a computer system configuration. According to one embodiment of the present invention, the execution component is further configured to transition between the plurality of views in response to execution of at least one of a computer system operation, a visual representation, a computer system configuration, and a change in computer system configuration. According to another embodiment of the invention, the user interface further comprises a plurality of modes of content for the computer content rendered on the computer display.

According to one aspect of the present invention, the plurality of views are configured to organize modes of content into different views. According to another embodiment of the invention, the plurality of modes of content comprise at least one of a web content mode, a channel content mode, a media content mode, an application content mode, a communication content mode, and a passive content mode. According to another embodiment of the invention, the plurality of modes of content include a web content mode, wherein the web content mode is configured to display web based content for proximal viewing by a user. According to another embodiment of the invention, the plurality of modes of content include a channel content mode, wherein the channel content mode is configured to display web based content for non-proximal viewing by a user. According to another embodiment of the invention, the plurality of modes of content include a media content mode, wherein the media content mode is configured to display media based content for non-proximal viewing by a user mode. According to another embodiment of the invention, the plurality of modes of content include a web content mode, wherein the web content mode is optimized to display web based content for proximal viewing by a user. According to another embodiment of the invention, the plurality of modes of content include a channel content mode, wherein the channel content mode is optimized to display web based content for non-proximal viewing by a user. According to another embodiment of the invention, the plurality of modes of content include a media content mode, wherein the media content mode is optimized to display media based content for non-proximal viewing by a user mode.

According to one embodiment of the present invention, the media based content includes at least one of digital photos, digital audio files, and digital video files. According to another embodiment of the invention, the media based content is accessed through a remote service. According to another embodiment of the invention, the plurality of modes of content include a connect content mode, wherein the connect content mode is configured to display computer configuration operations for viewing by a user. According to another embodiment of the invention, the plurality of modes of content include an application content mode, wherein the application content mode is configured to display computer applications for use by a user. According to another embodiment of the invention, in the plurality of views includes a home view configured to organize a plurality of content modes. According to another embodiment of the invention, the plurality of views includes a channel view configured to organize a single content mode. According to another embodiment of the invention, the plurality of views includes a channel view configured to organize dual content modes. According to another embodiment of the invention, the plurality of modes of content include a passive content mode, wherein the passive content mode is configured to display web based content for non-proximal viewing without user interaction.

According to one embodiment of the present invention, the plurality of modes of content include a passive content mode, wherein the passive content mode is optimized to display web based content for non-proximal viewing without user interaction. According to another embodiment of the invention, the plurality of views includes a screen saver view configured to organize selected content modes for passive viewing. According to another embodiment of the invention, the plurality of views further comprise a first layer, wherein the first layer organizes computer operations, including navigation operations, into groups based on similar functional operation. According to another embodiment of the invention, the first layer maps to groupings of lower level functionality. According to another embodiment of the invention, the first layer include navigation operations maps to a seconding layer comprising computer operations for interacting with computer content. According to another embodiment of the invention, levels of computer functions are segregated based on proximity of the operation to a source of digital content, higher levels including operations that navigate to lower level operations that permit interaction with computer content.

According to one embodiment of the present invention, the first layer comprises a home view and a channel view, and the first layer is further configured to organize and simplify access to lower level functions. According to another embodiment of the invention, the visual representations comprise a lower layer relative to the first layer and include lower level functions. According to another embodiment of the invention, the plurality of views includes a home view organizing a plurality of visual representations of digital content, wherein the home view is displayed responsive to a computer system configuration. According to another embodiment of the invention, the computer system configuration comprises a physical positioning of the computer system about a longitudinal axis of rotation. According to another embodiment of the invention, the computer system configuration further comprises a physical positioning of a computer system display relative to a base of the computer system. According to another embodiment of the invention, the home view comprises a header display and a body display. According to another embodiment of the invention, the header display comprises a lateral bar extending from the left of the computer display screen to the right of the computer display screen. According to another embodiment of the invention, the user interface further comprises a search tool displayed in the header display, wherein the search tool is configured to accept search terms entered by a user and in response to execution, causes the

computer system to navigate to a view of a first visual representation of digital content, wherein the digital content includes a search engine, and the search engine presents results for the search terms.

According to one embodiment of the present invention, the user interface further comprises a storage component configured to retain a previous view state. According to another embodiment of the invention, the execution component is further configured to cause the computer system to transition to a previous view in response to execution of a navigation element by a user. According to another embodiment of the invention, the user interface further comprises a navigation element disposed in the header display. According to another embodiment of the invention, the body display is rendered below the header display in the display screen of the computer system. According to another embodiment of the invention, the body comprises an organization of the plurality of visual representations of computer content rendered on the computer display. According to another embodiment of the invention, the user interface further comprises a display threshold for a screen rendered in the computer display. According to another embodiment of the invention, the home view is configured into pages based on the display of the computer system and the display threshold. According to another embodiment of the invention, the display threshold establishes a maximum number of visual representations display per page of the home view. According to another embodiment of the invention, the user interface further comprises an indication of visual representations displayed on adjacent pages of the home view, wherein the indication is display within the body of the home view.

According to one embodiment of the present invention, the user interface further comprises a nascent card displayed in the body of the home view, wherein the nascent card is configured to permit generation of additional visual representations of digital content. According to another embodiment of the invention, the execution component is further configured to execute a process for creating a visual representation in response to execution of the nascent card, wherein the process for creating a visual representation includes acts of transitioning to a quick access view, generating a mapping to online digital content, executing the mapping, and displaying a first view of the mapped digital content. According to another embodiment of the invention, the user interface further comprises a quick access view, wherein the quick access view is configured to permit user generation of a mapping between digital content and a visual representation. According to another embodiment of the invention, the quick access view permits a user to select from a display of frequently accessed web content to generate the mapping. According to another embodiment of the invention, the quick access view permits a user to select from a display of stored bookmarks to generate the mapping. According to another embodiment of the invention, the quick access view permits a user to enter a url to generate the mapping. According to another embodiment of the invention, the plurality of views includes a channel view, and the view selector component is further responsive to an integrated scroll wheel on the computer system. According to another embodiment of the invention, the view selector component is further configured to transition the computer system to the channel view in response to manipulation of the integrated scroll wheel.

According to one embodiment of the present invention, the channel view further comprises a channel selector. According to another embodiment of the invention, the channel selector comprises a display of a sequence of visual representations presenting a channel content mode. According to another embodiment of the invention, the display of the sequence of visual representations is responsive to manipulation of the integrated scroll wheel, and manipulation of the integrated scroll wheel causes the computer system to render a next visual representation in the display of the sequence of visual representations. According to another embodiment of the invention, the visual representations are responsive to execution by a selector, including a button. According to another embodiment of the invention, the button is available in a plurality of computer system configurations. According to another embodiment of the invention, the execution component is further configured to cause the computer system to transition to the first view including the digital content in response to execution of the selector by a user. According to another embodiment of the invention, the user interface further comprises a storage component configured to retain a current computer system configuration state.

According to one embodiment of the present invention, the storage component is further configured to retain a current view state. According to another embodiment of the invention, the execution component is further configured to transition the computer system display between the plurality of views, responsive to at least one of the current computer system configuration state and the current view state. According to another embodiment of the invention, the execution component is configured to transition to a channel view in response to manipulation of an integrated scroll wheel, when the computer system is in a laptop and an easel configuration. According to another embodiment of the invention, the user interface further comprises a scroll wheel threshold configured to require additional manipulations of the integrated scroll in order to cause the transition to the channel view, when the current computer system configuration state indicates the computer system is in a laptop configuration. According to another embodiment of the invention, the execution component is further configured to transition from the first view and a home view to a channel view in response to a change in computer system configuration state from laptop to easel.

According to another embodiment, the interface discussed above is displayed on a portable computer configurable between a plurality of display modes including a closed mode, a laptop mode and an easel mode. The portable computer further comprises a display component including a display screen, a base, a hinge assembly at least partially housed within the base and configured to pivotably couple the display component to the base, wherein the display component is rotatable about a longitudinal axis running along an interface between the display component and the base, wherein, in the closed mode, the display screen is disposed substantially against the base, wherein rotating the display component about the longitudinal axis up to approximately 180 degrees from the closed mode configures the portable computer into the laptop mode, and wherein rotating the display component about the longitudinal axis beyond approximately 180 degrees from the closed mode configures the portable computer into the easel mode.

According to one aspect of the present invention, a method for presenting a customized user interface for a computer system with a plurality selectable I/O profiles to a user is provided. The method comprises displaying a a map based graphical user interface on the computer system, the act of displaying the map based user interface includes acts of displaying a plurality of views of a plurality of visual

representations of computer content, wherein the computer content includes at least one of selectable digital content, selectable computer operations and passive digital content, and displaying the plurality of visual representations of computer content rendered on the computer display, wherein the plurality of visual representations of computer content include an association to a first view of the plurality of views, the first view including the computer content, and wherein the each of the plurality of visual representations is responsive to focus and execution, wherein execution includes clicking on the visual representation, and executing, by a computer processor, a transition in the computer system display between the plurality of views, wherein the act of executing includes an act of selecting one of the plurality of views for display on a computer system in response to a computer system configuration. According to one embodiment of the present invention, the act of executing occurs in response to an act of permitting execution of at least one of a computer system operation, a visual representation, a computer system configuration, and a change in computer system configuration. According to another embodiment of the invention, the method further comprises an act of displaying a plurality of modes of content for the computer content on the computer display, wherein the plurality of modes of content comprise at least one of a web content mode, a channel content mode, a media content mode, an application content mode, a communication content mode, and a passive content mode.

According to one embodiment of the present invention, the plurality of views are configured to organize modes of content into different views. According to another embodiment of the invention, the web content mode is configured to display web based content for proximal viewing by a user, wherein the channel content mode is configured to display web based content for non-proximal viewing by a user, wherein the media content mode is configured to display media based content for non-proximal viewing by a user mode, wherein the application content mode is configured to display computer applications for use by a user, wherein the communication content mode is configured to display computer configuration operations for viewing by a user, and wherein the passive content mode is configured to display web based content for non-proximal viewing without user interaction. According to another embodiment of the invention, in the plurality of views includes a home view and a channel view, and the method further comprises acts of organizing a plurality of content modes into the home view; and organizing at least one of a single content mode and a two content modes into the channel view. According to another embodiment of the invention, the plurality of views includes a screen saver view, and the method further comprises an act of organizing selected content modes for passive viewing in the screen saver view.

According to one embodiment of the present invention, the plurality of views includes a home view, and the method further comprises organizing a plurality of visual representations of digital content into the home view, wherein the home view is displayed responsive to a computer system configuration, displaying the home view in response to a compute system configuration, wherein the act of displaying the home view includes an act of displaying a header display and a body display in the home view, wherein the header display comprises a lateral frame extending from the left of the computer display screen to the right of the computer display screen, and wherein the body display is rendered below the header display in the display screen of the computer system. According to another embodiment of the invention, the computer system configuration comprises a physical positioning of the computer system display relative to a base of the computer system about a longitudinal axis of rotation. According to another embodiment of the invention, the method further comprises displaying a search tool in the header display, accepting entry of search terms through an I/O device, navigating to a view of a first visual representation of computer content, wherein the computer content includes a search engine, and the search engine presents results for the search terms, in response to an act of executing the search tool. According to another embodiment of the invention, the method further comprises an act of storing in a computer memory a previous view state. According to another embodiment of the invention, the method further comprises acts of displaying a navigation element in the header display, permitting execution of the navigation element by a user, and transitioning the computer system display to a previous view, in response to the act of permitting.

According to one embodiment of the present invention, the home view further comprises at least one display page and the method further comprising acts of displaying the plurality of visual representations of computer content rendered on the computer display in the body display, and displaying a maximal number of visual representations in a display page of the home view. According to another embodiment of the invention, the method further comprises displaying an indication of visual representations displayed on adjacent display pages in the home view, wherein the indication is displayed within the body of the home view. According to another embodiment of the invention, the method further comprises acts of displaying a nascent card in the body of the home view, permitting execution functionality associated with the nascent card, and generating an additional visual representations of digital content in response to execution of the functionality associated with the nascent card. According to another embodiment of the invention, the method further comprising act of executing a process for creating a visual representation in response to execution of the functionality associated with nascent card, wherein the process for creating a visual representation includes acts of transitioning to a quick access view, generating a mapping to online digital content, executing the mapping, and displaying a first view of the mapped digital content.

According to one embodiment of the present invention, the method further comprises acts of displaying a quick access view, permitting a user to select a source of digital content in the quick access view, and generating a mapping between the source of digital content and a visual representation in response to an act of selecting a source of digital content. According to another embodiment of the invention, the plurality of views includes a channel view, and the act of executing a transition occurs in response an act of activating an integrated scroll wheel on the computer system. According to another embodiment of the invention, the method further comprises an act of displaying a channel selector including an act of displaying a sequence of visual representations. According to another embodiment of the invention, the act of displaying the sequence of visual representations is responsive to manipulation of the integrated scroll wheel, and the method further comprises and act of displaying a next visual representation from the sequence of visual representations, in response to manipulation of the integrated scroll wheel. According to another embodiment of the invention, the method further comprises an act of storing in a computer memory a current computer system configura-

tion state and a current view state. According to another embodiment of the invention, the act of executing, by a computer processor, a transition in the computer system display the execution component, includes an act of transitioning the computer system display between the plurality of views, responsive to at least one of the current computer system configuration state and the current view state.

According to one embodiment of the present invention, the transition occurs to a channel view in response to manipulation of an integrated scroll wheel, when the computer system is in a laptop and an easel configuration. According to another embodiment of the invention, the transition occurs from at least one of the first view and a home view to a channel view in response to a change in computer system configuration state from laptop to easel.

According to one aspect of the present invention, a computer-readable medium having computer-readable signals stored thereon that define instructions that, as a result of being executed by a computer, instruct the computer to perform the method for presenting a customized user interface for a computer system with a plurality selectable I/O profiles to a user as described above is provided.

According to one aspect of the present invention, a system for presenting a customized user interface for a system with a plurality selectable I/O profiles is provided. The system comprises a first user interface component configured to display a plurality of views of a plurality of visual representations of computer content, wherein the computer content includes at least one of selectable digital content, selectable computer operations and passive digital content, a second user interface component configured to display the plurality of visual representations of computer content on the computer display, wherein the plurality of visual representations of computer content include an association to a first view of the plurality of views, the first view including the computer content, and wherein the each of the plurality of visual representations is responsive to focus and execution, wherein execution includes clicking on the visual representation, and an execution component configured to execute a transition in the computer system display between the plurality of views, wherein the execution component further comprises a view selector component act configured to select one of the plurality of views for display on a computer system in response to a computer system configuration. According to one embodiment of the present invention, the execution component is further configured to transition between the plurality of views in response to execution of at least one of a computer system operation, a visual representation, a computer system configuration, and a change in computer system configuration. According to another embodiment of the invention, the second user interface component is further configured to display a plurality of modes of content for the computer content rendered on the computer display, wherein the plurality of modes of content comprise at least one of a web content mode, a channel content mode, a media content mode, an application content mode, a communication content mode, and a passive content mode. According to another embodiment of the invention, the plurality of views are configured to organize modes of content into different views. According to another embodiment of the invention, the web content mode is configured to display web based content for proximal viewing by a user, wherein the channel content mode is configured to display web based content for non-proximal viewing by a user, wherein the media content mode is configured to display media based content for non-proximal viewing by a user mode, wherein the application content mode is configured to display computer applications for use by a user, wherein the communication content mode is configured to display computer configuration operations for viewing by a user, and wherein the passive content mode is configured to display web based content for non-proximal viewing without user interaction.

According to one embodiment of the present invention, the first user interface component is further configured to display a home view configured to organize a plurality of content modes, and a channel view configured to organize at least one of a single content mode and two content modes. According to another embodiment of the invention, the plurality of views includes a screen saver view configured to organize selected content modes for passive viewing. According to another embodiment of the invention, the first user interface component is further configured to display a home view organizing a plurality of visual representations of digital content, wherein the home view comprises a header display and a body display, and wherein the header display comprises a lateral frame extending from the left of the computer display screen to the right of the computer display screen, wherein the body display is rendered below the header display in the display screen of the computer system. According to another embodiment of the invention, the system is configured to permit selection of a computer system configuration, and the computer system configuration comprises a physical positioning of the computer system display relative to a base of the computer system about a longitudinal axis of rotation. According to another embodiment of the invention, the first user interface component is further configured to display a search tool in the header display, wherein the search tool is configured to accept search terms entered by a user, and wherein the execution component is further configured to causes the computer system to navigate to a view of a first visual representation of digital content, wherein the digital content includes a search engine, and the search engine presents results for the search terms in response to execution of the search tool.

According to one embodiment of the present invention, the system further comprises a storage component configured to retain a previous view state. According to another embodiment of the invention, the execution component is further configured to cause the computer system to transition to a previous view in response to execution of a navigation element by a user. According to another embodiment of the invention, the first user interface component further comprises a display of the navigation element in the header display. According to another embodiment of the invention, the body display comprises an organization of the plurality of visual representations of computer content rendered on the computer display, and the home view further comprises display pages in response to a display threshold establishing a maximal number of visual representations displayed per display page. According to another embodiment of the invention, the home view further comprises an indication of visual representations displayed on adjacent display pages of the home view, wherein the indication is displayed within the body of the home view. According to another embodiment of the invention, the second user interface component further comprises a nascent card displayed in the body of the home view, wherein the nascent card is configured to permit generation of additional visual representations of digital content. According to another embodiment of the invention, the execution component is further configured to execute a process for creating a visual representation in response to execution of the nascent card, wherein the process for creating a visual representation includes acts of transitioning

to a quick access view, generating a mapping to online digital content, executing the mapping, and displaying a first view of the mapped digital content.

According to one embodiment of the present invention, the first user interface component further comprises a quick access view, wherein the quick access view is configured to permit user generation of a mapping between digital content and a visual representation. According to another embodiment of the invention, the plurality of views includes a channel view, and the view selector component is further responsive to an integrated scroll wheel on the computer system. According to another embodiment of the invention, the view selector component is further configured to transition the computer system to the channel view in response to manipulation of the integrated scroll wheel. According to another embodiment of the invention, the channel view further comprises a channel selector comprising a display of a sequence of visual representations presenting a channel content mode. According to another embodiment of the invention, the display of the sequence of visual representations is responsive to manipulation of the integrated scroll wheel, and manipulation of the integrated scroll wheel causes the computer system to render a next visual representation in the display of the sequence of visual representations. According to another embodiment of the invention, the system further comprises a storage component configured to retain a current computer system configuration state and a current view state. According to another embodiment of the invention, the execution component is further configured to transition the computer system display between the plurality of views, responsive to at least one of the current computer system configuration state and the current view state. According to another embodiment of the invention, the execution component is configured to transition to a channel view in response to manipulation of an integrated scroll wheel, when the computer system is in a laptop and an easel configuration. According to another embodiment of the invention, the execution component is further configured to transition from the first view and a home view to a channel view in response to a change in computer system configuration state from laptop to easel.

According to one embodiment, a portable computer is configurable between various modes, including a closed mode, a laptop mode, an easel mode, a flat mode and a frame mode. The portable computer may comprise a display component including a display screen, a base, and a hinge assembly at least partially housed within the base and configured to pivotably couple the display component to the base. The display component may be rotatable about a longitudinal axis running along an interface between the display component and the base. In the closed mode, the display screen may be disposed substantially against the base, and rotating the display component about the longitudinal axis up to approximately 180 degrees from the closed mode may configure the portable computer into the laptop mode. Rotating the display component about the longitudinal axis beyond approximately 180 degrees axis from the closed mode may configure the portable computer into the easel mode.

In one example of the portable computer, the display component is rotatable about the longitudinal axis up to approximately 320 degrees from the closed mode. In another example, the portable computer comprises a display orientation module that displays content on the display screen in one of a plurality of orientations relative to the longitudinal axis. The orientation of the displayed content may be dependent on the current display mode of the portable computer, or may be configurable responsive to a user input. The portable computer may further comprise a mode sensor which detects a current display mode of the portable computer, and the display orientation module may display content on the display screen in an orientation dependent on the current display mode detected by the mode sensor. Depending on the hinge assembly used, the longitudinal axis may comprises multiple parallel axes, and the hinge assembly may be configured to permit rotation of the display component about any of the multiple parallel axes to configure the portable computer between the plurality of display modes.

Still other aspects, embodiments, and advantages of these exemplary aspects and embodiments, are discussed in detail below. Moreover, it is to be understood that both the foregoing information and the following detailed description are merely illustrative examples of various aspects and embodiments, and are intended to provide an overview or framework for understanding the nature and character of the claimed aspects and embodiments. Any embodiment disclosed herein may be combined with any other embodiment in any manner consistent with the objects, aims, and needs disclosed herein, and references to "an embodiment," "some embodiments," "an alternate embodiment," "various embodiments," "one embodiment" or the like are not necessarily mutually exclusive and are intended to indicate that a particular feature, structure, or characteristic described in connection with the embodiment may be included in at least one embodiment. The appearances of such terms herein are not necessarily all referring to the same embodiment.

BRIEF DESCRIPTION OF THE DRAWINGS

Various aspects of at least one embodiment are discussed below with reference to the accompanying figures, which are not intended to be drawn to scale. The figures are included to provide illustration and a further understanding of the various aspects and embodiments, and are incorporated in and constitute a part of this specification, but are not intended as a definition of the limits of the invention. Where technical features in the figures, detailed description or any claim are followed by references signs, the reference signs have been included for the sole purpose of increasing the intelligibility of the figures, detailed description, and/or claims. Accordingly, neither the reference signs nor their absence are intended to have any limiting effect on the scope of any claim elements. In the figures, each identical or nearly identical component that is illustrated in various figures is represented by a like numeral. For purposes of clarity, not every component may be labeled in every figure. In the figures:

FIG. **1** is an illustration of one example of a portable computer, according to aspects of the invention, in a "laptop" configuration;

FIG. **2** is a screen shot illustrating one example of a graphical user interface showing a home view, according to aspects of the invention;

FIG. **3**A-C are screen shots illustrating examples of a graphical user interface showing web page views, according to aspects of the invention;

FIG. **4** is a perspective view of the portable computer of FIG. **1** in the easel mode;

FIG. **5** is a screen shot illustrating one example of a graphical user interface showing a quick access view, according to aspects of the invention;

FIG. **6** is a screen shot illustrating one example of a graphical user interface showing a bookmark view, according to aspects of the invention;

FIG. **7**A-B are screen shots illustrating examples of a graphical user interface showing a web page view, according to aspects of the invention;

FIG. **8** is a screen shot illustrating one example of a graphical user interface showing a home view, according to aspects of the invention;

FIG. **9** is an illustration of an example conceptual model of a graphical user interface, according to aspects of the invention;

FIG. **10** illustrates an example process for generating a visual representation of computer content, according to aspects of the invention;

FIG. **11** is a block diagram of one example of a portable computer user interface architecture, according to aspects of the invention;

FIG. **12** is a screen shot illustrating one example of a graphical user interface, according to aspects of the invention;

FIG. **13** is a screen shot illustrating another example of a graphical user interface according to aspects of the invention;

FIG. **14** illustrates an example of a behavior model for display of cards responsive to computer focus, according to aspects of the invention;

FIG. **15**A is a screen shot of an example web card in a non-hover state, according to aspects of the invention;

FIG. **15**B is a screen shot of an example web card in a hover state, according to aspects of the invention;

FIG. **16** is a screen shot of examples of option views of cards, according to aspects of the invention;

FIG. **17** is an illustration of an example of the portable computer in the laptop mode, according to aspects of the invention;

FIG. **18**A-E illustrate examples of a header display responsive to focus and user activity, according to aspects of the invention;

FIG. **19** is a screen shot of a web page view including a toolbar, according to aspects of the invention;

FIG. **20**A-B are screen shots illustrating examples of a graphical user interface showing a channel page view, according to aspects of the invention;

FIG. **21** is a screen shot illustrating examples of a graphical user interface showing a channel full view, according to aspects of the invention;

FIG. **22** is a screen shot illustrating one example of a graphical user interface showing a bookmark view, according to aspects of the invention;

FIG. **23** is a screen shot illustrating one example of a graphical user interface showing a channel view, according to aspects of the invention;

FIG. **24** is a screen shot illustrating one example of a graphical user interface showing a channel page view, according to aspects of the invention;

FIG. **25**A-B are illustrations of example logical diagrams of the behavior for the channel view, according to aspects of the invention;

FIG. **26** is an illustration of the portable computer configured into a "frame" mode, according to aspects of the invention;

FIG. **27** is an illustration of the portable computer configured into a "flat" mode, according to aspects of the invention;

FIG. **28** is an illustration of an example logical diagram of the behavior for the channel view, according to aspects of the invention;

FIG. **29**A-B are screen shots illustrating example graphical user interfaces showing a web page view with a share interface, according to aspects of the invention;

FIG. **30** is a screen shot illustrating an example graphical user interface showing a shared card, according to aspects of the invention;

FIG. **31** is a screen shot illustrating an example graphical user interface showing a shared card notification, according to aspects of the invention;

FIG. **32** is a screen shot illustrating an example graphical user interface showing a notification messages, according to aspects of the invention;

FIG. **33** is a screen shot illustrating an example graphical user interface showing a notification, according to aspects of the invention;

FIG. **34** is a screen shot illustrating an example graphical user interface showing a notification, according to aspects of the invention;

FIG. **35** is a screen shot illustrating an example graphical user interface showing a web page view with a download interface, according to aspects of the invention;

FIG. **36** is a flow diagram of one example process for interpreting executable operations into streamlined operations according to aspects of the invention;

FIG. **37** is a flow diagram of one example process for permitting selection of executable operations in content according to aspects of the invention;

FIG. **38** is a flow diagram of one example process for transforming executable operations into remote storage operations according to aspects of the invention;

FIG. **39** is a flow diagram of one example process for obtaining service access information, according to aspects of the invention;

FIG. **40** is a flow diagram of one example process for pre-configuring a streamlined device, according to aspects of the invention;

FIG. **41**A is a screen shot illustrating an example graphical user interface showing a web page view with a print interface, according to aspects of the invention;

FIG. **41**B are screen shots illustrating examples of print and download interfaces, according to aspects of the invention;

FIG. **42** is a flow diagram of one example process for streamlining user interactions with digital content, according to aspects of the invention;

FIG. **43** is a flow diagram of one example process for streamlining user interactions with computer content, according to aspects of the invention;

FIG. **44** is a flow diagram of one example process for permitting a user to interact with computer content, according to aspects of the invention;

FIG. **45** is a flow diagram of one example process for providing consistent accessibility to computer content, according to aspects of the invention;

FIG. **46** is a flow diagram of one example process for providing consistent navigation operations to a user, according to aspects of the invention;

FIG. **47**A-B are flow diagrams of example processes for generating a user interface element, according to aspects of the invention;

FIG. **48** is a flow diagram of one example process for permitting a user to select a viewing mode for a streamlined device, according to aspects of the invention;

FIG. **49**A is a flow diagram of one example process for transitioning between a lean forward view to a lean backward view, according to aspects of the invention;

FIG. **49**B is a flow diagram of one example process for transitioning between user views, according to aspects of the invention;

FIG. **50** is a flow diagram of one example process for organizing a plurality of views and GUI elements into a consistent presentation, according to aspects of the invention;

FIG. **51** is a block diagram of a computer system for streamlining user interactions with computer content according to aspects of the invention; and

FIGS. **52**A-C are diagrams illustrating different positions of the portable computer of FIG. **4** in easel mode;

FIG. **53**A is an illustration of a portion of the portable computer of FIG. **1** in the laptop mode, illustrating a hinge assembly according to aspects of the invention; and

FIG. **53**B is an in illustration of a portion of the portable computer of FIG. **1** in the easel mode, illustrating the hinge assembly according to aspects of the invention.

DETAILED DESCRIPTION

It is realized that the conventional wisdom with respect to such "feature packing" as discussed above suffers from significant flaws. Typical computer users simply can't take advantage of all the functionality offered, either the services and features offered by their own computer, or the services and features offered by online providers. The complexity of the interface (both hardware and software) hampers adoption, as does the volume of features offered. For example, third party service provides often find difficulty in subscribing new users, educating existing users, and providing integration of feature sets for the features they provide as well as those offered by other service providers.

Synergy between services providers can be found and exploited by even the most novice user through streamlined computer systems and user interface presentation. According to one aspect, the interplay between various third party services and computer features can be readily appreciated by even the most novice user because the various functionality and features sets are easily accessible through the streamlined access controls and consistent user interfaces. As discussed further below, in one example, the graphical user interface improves transitions from one service to another, through a consistent view of available content. A user is able to navigate easily and quickly from one content provider to another user the organized view. The elements that comprise the view further facilitate navigation and transition by, for example, retaining state information an in another example by remaining persistent to the view.

According to another aspect, streamlining the computer system/device the user interacts with includes establishing a first set of I/O devices that a user needs to operate and providing that first set of I/O devices as a physical configuration of the device. Additionally, providing the user the ability to change from the first set of I/O devices, a first I/O profile, to another at will improves the user experience and permits the user to dynamically select a preferred I/O profile best suited to the user's present need. According to one embodiment, user selection includes transitioning from a lean back mode to a lean forward mode and vice versa. In one embodiment, the user's computer device is configured to have multiple I/O profiles that can be selected by physically manipulating the orientation of the computer device itself.

According to another aspect, streamlining user interactions with the computer system/device includes representing computer based content in visual representations that render computer operations/behavior in a consistent manner. The visual representations are adapted to permit easy user interaction even upon selection of a first I/O profile or the change in selection of an I/O profile. According to one embodiment, the visual representations are rendered as cards, as discussed in more detail below. Different types of cards may be employed to render different types of available content. For example, web based content, may be rendered as a web card (e.g. FIG. **2**, **206**) that associated with a mapping to web content. Some web cards map directly to web pages and in response to selection of the web card the computer device executes the mapping and displays a web view of the content. Other cards may be used to provide interactive displays selectable by a user. In another example, system operations are displayed as system cards (e.g. FIG. **2**, **212**), which are associated with mappings to system operations, for example communications configurations, and may comprise a settings card, among other system options. Another type of card includes a channel card (e.g. Fig. configured to stream web based content in a manner that allows for summarization of content, while still providing the ability to fully appreciate the summarized content.

Those skilled in the art will appreciate that previous attempts have been made to present summary views of available content. However, known summarized content typically suffers from significant flaws. For example summarization of web based content simply reduces the display size of the information in the content. With respect to news headlines, for example, this often prevents a user from being able to appreciated the summarize content. Quite simply truncating a headline prevents the user from understanding the context of the portion of the headline s/he is able to read. In other examples, headlines are display to such a reduce size that an average computer user simply cannot read or appreciate them. Using channel cards according to aspects and embodiments, summarized content may be presented in a manner that permits appreciation and interaction with the summarized content itself. In another example, channel card are configured to present a streamlined view that cannot only be appreciated and interacted, but may be transitioned from one mode of viewing to another without loss of the ability to appreciate and interact with the streamlined view.

According to one aspect, streamlining of the user device and streamlining of the user interface provided in such devices leads to simplified interaction between a user and features. The streamlining may impact not only features of the system, but features provided by services accessed by the system. Streamlined activity leads directly to better adoption, understanding and integration of both new and old features available to users. The consistency of user experience even with third party service providers, for example, fosters familiarity not only with a particular user and his/her interactions with a particular device, but also with other users of the same/similar device. A common experience may be created for multiple users, fostering a community experience. According to one example, providing a common experience includes establishing a global profile for a user of a streamlined device. The global profile, in some examples, is retained in remote storage, and accessed upon start up of any streamlined device. The global profile permits the user's experience to be consistent even across multiple streamlined devices. In one example, configurations and customizations are retained in remote storage; changes on one device may be written to remote storage, propagating changes across multiple streamlined devices that access the remote storage. Thus a common experience is also provided across multiple devices.

According to another aspect, the common experience may also include a community aspect. The community aspect includes sharing of content between users, sharing of content and configurations, sharing of content, configurations, and customizations, among many options. In particular, sharing may involve the transmission of user interface elements to other users. In one example, a user may share a card and any of its configurations with another user. Access to the shared user interface elements, in some embodiments, facilitates communal computer usage. In one example, a first user may be watching media on their streamlined device, another user known to the first user, may receive a user interface element that retains information related to the accessed content and information related to the present context. That is for the first user watching a movie, the first user may share the user interface element through which s/he is accessing the move, and permit the another user not only to watch the movie, but to take up the movie at the same point in time, so in essence, they get to enjoy the movie together. Content and context retention by user interface elements that can be shared provides unique advantages to the users of the streamlined devices.

According to another aspect, various operations provides on conventional systems are adapted for streamlined processing. In on example, operations that require large amounts of computer storage are transformed in remote storage requests. In one embodiment, a streamlined device is configured to identify local storage request and transform them into a storage request to an on-line service provider identified in a user and/or device profile. In another embodiment, the system prompts a user to identify a service provider in response to a local request. Various operations may be transformed, including download and print operations, among others.

It is to be appreciated that embodiments of the methods and apparatus discussed herein are not limited in application to the details of construction and the arrangement of components set forth in the following description or illustrated in the accompanying figures. The methods and apparatus are capable of implementation in other embodiments and of being practiced or of being carried out in various ways. Examples of specific implementations are provided herein for illustrative purposes only and are not intended to be limiting. In particular, acts, elements and features discussed in connection with any one or more embodiments are not intended to be excluded from a similar role in any other embodiments.

Also, the phraseology and terminology used herein is for the purpose of description and should not be regarded as limiting. Any references to embodiments or elements or acts of the systems and methods herein referred to in the singular may also embrace embodiments including a plurality of these elements, and any references in plural to any embodiment or element or act herein may also embrace embodiments including only a single element. References in the singular or plural form are not intended to limit the presently disclosed systems or methods, their components, acts, or elements. The use herein of "including," "comprising," "having," "containing," "involving," and variations thereof is meant to encompass the items listed thereafter and equivalents thereof as well as additional items. References to "or" may be construed as inclusive so that any terms described using "or" may indicate any of a single, more than one, and all of the described terms. Any references to front and back, left and right, top and bottom, and upper and lower are intended for convenience of description, not to limit the present systems and methods or their components to any one positional or spatial orientation.

Device Examples and Configuration Options

Various aspects, including the integration between the user interface, its views, and navigation options are further illustrated in the user device itself. According to one embodiment, the user interface and the visual representations that comprise the interface are configured to be responsive to the physical configuration of the user device. In one example, the view presented to user is configured to be responsive to the mode/configuration of the device.

According to one aspect, systems and methods are provided for simplifying the presentation of multi-media features and options into an integrated and streamlined presentation format. Streamlining presentation includes reducing the number of options that a user must navigate/configure in order to take advantage of new systems and features, simplifying the process of adoption and education. In one embodiment a system is provided with only the physical components necessary to achieve streamlined presentation of both operating system features and integration of third party services. For example, a streamlined hardware device provides for (in comparison to typical desktop and laptop systems) a reduced user input platform as a first I/O profile, comprising in one configuration a scroll wheel and a button interface. Other I/O profiles are available for user selection by manipulation of the device itself. In one embodiment, an easel mode presents the user with the first I/O profile and by rotating the computer device about a longitudinal axis; the user may select a second I/O profile, including a keyboard. The transition from one I/O profile to another may also cause the computer device to alter its display. In one example, the user interface provided to the user is responsive to selection of device mode and/or selection of I/O profile.

It is to be appreciated that reducing the number of I/O device achieves simplicity of design and ease of operation by the user, and at the same time may increase the complexity of the graphical user interfaces needed to support interaction with systems and third parties that anticipate, rely on, or expect additional I/O devices. Streamlining device operation by the user is balanced against sophistication of user the interface required to enable user interaction with the same features used with additional I/O devices. According to one embodiment, the user interface layer provides simplified accessibility based on the device's I/O platform, and for some embodiments, the user interface layer is responsive to device configurations that change the device's I/O capabilities. In other embodiments, the user interface is responsive to changes in the device's mode. In some examples, changes in device mode and changes I/O profile will occur together, however, in other examples a change in mode or a change in I/O profile will not require a corresponding change in profile or mode respectively.

One example of a streamlined device includes a portable computer that is configurable between a laptop mode (in which the portable computer has a conventional laptop appearance) and an easel mode in which the base of the computer and its display component stand upright forming an inverted "V," as discussed further herein. Certain aspects and embodiments are directed to a portable computer that is configurable between different operating modes, including a laptop mode (in which the portable computer has a conventional laptop appearance), a flat mode, a frame mode, and an easel mode in which the base of the computer and its display component stand vertically forming an inverted "V," as discussed further herein. Reference to modes of the com-

puter, modes of the device and intended to include the physical configuration of the portable computer/device.

The portable computer is capable of different display formats and functionality in the different modes, and includes a graphical user interface that may work seamlessly with the computer hardware to provide a unified, comfortable, holistic user experience. In particular, the portable computer may provide access to a wide array of functions, both those traditionally provided by computing devices and those traditionally provided by other passive information devices. For example, the hardware and software, including the graphical user interface, of the portable computer may be focused toward providing access to entertainment media, such as audio and video (e.g., playing music, streaming video, viewing photographs, etc.), email, and internet, while also providing state-of-the-art computer processing capability.

Referring to FIG. **1**, there is illustrated one example of a portable computer according to aspects of the invention. In FIG. **1**, the portable computer **100** is illustrated in the "laptop" mode, with the display component **102** inclined at a viewing angle from the base **104**. The display component **102** is pivotably coupled to the base **104** by a hinge assembly (not shown) that allows the display component to be rotated with respect to the base. The hinge assembly may include a single or multiple hinges, which may be any of a variety of hinge types, including, but not limited, to single-axis hinges, multiple-axis hinges, geared hinges, etc. In one example, the hinge assembly allows the display component **102** to be rotated (or tilted) about a longitudinal axis **101** running along an interface between the display component and the base **104**, as illustrated in FIG. **1** and discussed further below. The base **104** includes a keyboard **106** and internal electronic components (not shown), such as a central processing unit, memory, and other components necessary to operate the portable computer, as known to those skilled in the art. In some embodiments, the base **104** may also include a touch pad **108** or trackball (not shown) for receiving user commands, as known to those skilled in the art.

Still referring to FIG. **1**, the display component **102** includes a display screen **110**, and may also include a camera **112**, microphone **114**, and infrared receiver **116**, as discussed further below. It is to be appreciated that the locations of the camera **112**, microphone **114** and infrared receiver **114** are not limited to the example illustrated in FIG. **1**, and may be placed in other locations on the display component **102** and/or base **104**, as would be recognized by those skilled in the art. The display component **102** may also include cushions **118** that provide soft contact points between the base **104** and the display component **102** when the portable computer is closed. In one example, the cushions **118** are made of rubber. However, it is to be appreciated that the invention is not so limited, and the cushions **118** may comprise materials other than rubber, including, for example, a polymer, felt, or other suitable materials as would be recognized by those skilled in the art.

Referring to FIG. **4**, there is illustrated an example of the portable computer **100** configured into the easel mode. To convert the portable computer **100** from the laptop mode (or closed position) into the easel mode, the display component **102** may be folded away from the base **104**, in the same direction as to open the computer (i.e., to configure the computer from the closed position into the laptop mode) such that the base **104** and the display component **102** form an inverted "V" shape with the bottom of the base and the back of the display component face another, as illustrated in FIG. **4**. In the easel mode, the display screen **110** is visible and accessible on one side of the portable computer **100** and the keyboard **106** (not shown in FIG. **4**) is visible and accessible on the other side.

As illustrated in FIG. **4**, in one embodiment, the portable computer may comprise integrated hardware volume controls, including a volume control button **294** and a mute button **296**. In one example, the volume control button **294** may be a rocker switch that allows a user to easily increase or decrease the volume of audio played through the speakers **128**. When the user presses the volume control button **294**, a volume indicator may temporarily appear on the display screen **110**, to provide a visual indication of the amount by which the volume is being increased or decreased. Similarly, pressing the mute button **296** may cause a visual indication that the volume is muted to appear on the display screen **110**.

According to one embodiment, when the portable computer **100** is configured into the easel mode, the visual display on the display screen **110** is automatically rotated 180 degrees such that the information appears "right-way-up," even through the display screen is upside-down compared to when the portable computer is in the laptop mode. Thus, a user may simply "flip" the portable computer **100** into the easel mode and immediately be able to comfortably view information on the display screen **110**, without having to access display screen controls to adjust the orientation of the visual display. In one embodiment, the portable computer **100** includes an orientation (or mode) sensor that is configured to detect whether the portable computer is in the laptop mode or the easel mode, and to adjust the display accordingly. The orientation sensor may be incorporated into the base component **104**, for example, underneath the keyboard **106**, or into the display component. In one example, locating the orientation sensor in the display component **102**, rather than the base **104**, may provide more robust detection and therefore, may be presently preferred in some embodiments. The orientation sensor may be used to determine a precise relative orientation of the base component **104** with respect to the display component **102**, or vice versa, for example, to determine whether the device is in the laptop mode, easel mode, or some point in between the two modes. In one example, the orientation sensor includes an accelerometer whose output is fed to the computer operating system (or to dedicated logic circuitry) which then triggers a display inversion as appropriate.

According to one embodiment an accelerometer is used to detect a configuration of the portable computer, although, it is to be appreciated that other sensors and devices may be used to determine a configuration. According to another embodiment, the portable computer may include integrated "navigation" hardware that allows a user to easily and comfortably control various features and functions of the portable computer, to manipulate content displayed on the portable computer, and to interact with visual representations of content display in a user interface. For example, as discussed above, the portable computer **100** may comprise a scroll wheel **132** that allows a user to control, adjust and/or select various functionality of the portable computer. According to another embodiment, the scroll wheel **132** may be used to provide "hardware navigation" through information, such as menus, icons, etc., displayed on the display screen **110**, as discussed further below with reference to FIG. **17**. A common display configuration used in conventional computers is a "desktop" view in which multiple icons representing links to various programs or applications are displayed over a background image. Navigation may be conventionally performed using a mouse, touch pad or trackball, as known to those skilled in the art.

According to another embodiment, the portable computer **100** includes a streamlined graphical user interface that supports "map" navigation. The map user interface provides a clear overview of the entire computing environment and searching capability within the environment that may be accessed using the scroll wheel **132** and, optionally, one or navigation buttons **166**, **168** that may be provided on the base **104** of the portable computer **100** (button **166**) and/or in the keyboard **106** (button **168**), illustrated in FIG. **17**. In one embodiment, the map mode of navigation is a hierarchical mode that reduces the number of items to select amongst at any stage of navigation, thereby facilitating user access with the scroll wheel **132** and, optionally, the navigation button(s) **166**, **168**. Of course, it is to be appreciated that the map user interface may also be navigated using conventional tools, such as a trackball, touchpad, mouse or arrow keys.

Referring to FIG. **11**, there is illustrated a block diagram of one example of an architecture of the portable computer including a map user interface. The user interface "home" screen **170** that displays a plurality of modes of content **172**. In the illustrated example, the home screen **170** contains five modes of content **172**; however, it is to be appreciated that the home screen may include more or fewer than five modes of content and that the modes of content may differ from the examples discussed below. According to one example, the modes of content **172** accessible via the home screen **170** may include "media" **172***a*, "connect" **172***b*, "web" **172***c*, "applications" **172***d*, and "channels" **172***e*. Using the map user interface, information, programs, features and applications may be grouped into the various modes of content **172**. By selecting any mode of content **172**, for example, by using the scroll wheel **132** and/or navigation buttons **166**, **168**, as discussed further below, the user may access the content organized within that mode.

For example, the media mode **172***a* may provide access to a medial player to play, view, search and organize media such as music, video, photos, etc. The connect mode **172***b* may provide access to features such as, for example, email, voice-over-IP, instant messaging, etc., and the web mode **172***c* may provide access to internet browsing and searching. The application mode **172***d* may provide access to, for example, computer applications or programs, such as word processor, spreadsheet, calculator, etc. In one example, these applications or programs may be provided as web-based services rather than programs or applications residing on the portable computer **100**. The channels mode **172***e* may provide access to different functionality of the portable computer, with the different functions or features defined as different channels. For example, a channel may include an alarm clock channel in which the portable computer is configured to display a clock and can be programmed to activate an alarm, e.g., a sound, piece of music, etc., at a predetermined time. Another example of a channel may include a "photo frame" channel in which the portable computer may be configured to display a pre-selected image or set of images, etc. Another example of a channel is a "television" channel, in which the portable computer is configured to stream Internet television. In one example, a user may configure particular Internet television channels (e.g., a news channel, a movie channel, a home and garden channel, etc.) into sub-channels within the channels mode of content **172**(*e*). Some or all of the modes of content **172** may access, retrieve and/or store information on the Internet **174**.

Typically streamlined devices are integrated with remote content storage and/or access, shown at **174**. The integration may be provided through third party service providers, in one example photo service FLICKR is integrated with various aspects of the device and/or the device's user interface to provide seamless access to photo content stored by the third party provider. The integration with remote storage services permits reduced storage capacity on the user device, for example, a portable computer. Other services may be integrated including for example GOOGLE DOCS, for word processing and other office related applications provided on-line. Reducing and/or eliminating the need for non volatile memory in the computer system is advantageous in that the device itself may be reduced in complexity and any associated cost. In some embodiments, a streamlined device doe not incorporate a hard disk drive for storage, providing for any local storage requirement through RAM and Flash memory.

According to one embodiment, the different modes of content **172** may be displayed as a series of bars across the display screen **110**, as illustrated in FIG. **12**. The following discussion of various features, including hardware navigation through the map user interface may refer primarily to the display configuration illustrated in FIG. **12**. However, it is to be appreciated that the invention is not so limited, and the modes of content may be displayed in other configurations, including, for example, a "desktop" and icon configuration, a "dashboard" type display, as illustrated in FIG. **13**, or another configuration, as would be recognized by those skilled in the art. Similarly, navigation is discussed below primarily with reference to the scroll wheel **132** and navigation buttons **166**, **168**; however, it is to be appreciation that navigation may also be accomplished using any of the conventional tools discussed above or known to those skilled in the art.

As discussed above, according to one embodiment, the scroll wheel **132** and, optionally, the navigation buttons **166**, **168** may be used to navigate the user interface. Referring again to FIG. **12**, scrolling the scroll wheel may sequentially highlight different ones of the modes of content **172**. In one example, the highlighting may be achieved by changing the color of the selected mode, and/or by providing a visual indicator, such as a colored bar **176**. A highlighted mode **172** may be selected by pressing the scroll wheel, thereby bringing up a new "page" or screen on the user interface corresponding to the selected mode. Once within a selected mode of content **172**, the scroll wheel may similarly be used to select particular functions, features or applications within that mode. In one embodiment, the default action for the scroll wheel **132** may vary depending on whether the portable computer **100** is in the laptop mode or the easel mode. For example, in easel mode, the default action for the scroll wheel may be channel selection within the channels mode **172**(*e*). In one embodiment, the scroll wheel **132** may be depressible as well as scrollable. Thus, pressing the scroll wheel **132**, as illustrated in FIG. **4**, may allow further control, such as, for example, selecting a channel onto which the user has scrolled, or "play" and "pause" of audio or video being played through the portable computer **100**.

As discussed above, according to one embodiment, one or more navigation buttons may be used in conjunction with the scroll wheel. In particular, in one embodiment, the navigation button(s) may be used to change the action of the scroll wheel. As discussed above, in one example, the default action of the scroll wheel is volume control. This action may be changed by pressing the navigation button **166**, as illustrated in FIG. **4**, for example, from volume control to menu navigation in the user interface, and vice versa.

According to one embodiment, the effect of pressing the navigation button **166** may vary depending on active the mode of content of the portable computer **100**. For example, if a user is in the media mode using a photo viewing application, pressing the navigation button **166** may change the action of the scroll wheel **132** from mode navigation to slideshow controls for the photos. When the navigation button **166** is pressed, an control indicator box (similar to the volume indicator box **162** discussed above with reference to FIG. **14**) may appear containing different actions for the photo slideshow, such as "play," "next," "back," "skip," "full screen view," etc., and scrolling the scroll wheel **132** may allow a user to select one of these actions. Pressing the navigation button **166** again may return the scroll wheel action to menu navigation, to allow the user to, for example, move to a different feature or application within the active mode, or to select a different mode.

As can be seen in FIG. **4**, the navigation button **166** may be easily accessed when the portable computer **100** is in the easel mode, providing a convenient navigation tool for this configuration. A similar navigation button **168** may be provided on the keyboard **106**, as illustrated in FIG. **17**. In one example, the functionality of the two navigation buttons **166**, **168** may be the same, with the different locations providing easy, comfortable access in the different configuration modes (i.e., laptop or easel) of the portable computer **100**. Thus, a user may use either navigation button **166** or navigation button **168**, depending on personal preference. In another example, the two navigation buttons may have different functionality. For example, the navigation button **166** may be used to alter the action of the scroll wheel **132**, as discussed above, while the navigation button **168** is used to navigate "up" or "down" a level within the map user interface. For example, pressing the navigation button **168** while within a given mode of content may allow the user to "back up" to the home screen; or pressing the navigation button **168** while within a selected channel (in the channel mode of the content **172***e*) may allow the user to "back-up" to the channel mode main page.

It is to be appreciated that numerous variations on the functionality of the navigation buttons **166**, **168** is possible, as would be recognized by those skilled in the art, and the above examples are given for illustration only and are not intended to be limiting. In addition, any functions described with reference to one navigation button (**166** or **168**) may be instead (or additionally) implemented with the other navigation button. In one example, the function of the navigation buttons **166**, **168** may vary depending on whether the portable computer **100** is configured into the laptop mode or the easel mode. For example, only the navigation button **166** may be active in the easel mode, and only the navigation button **168** may be active in the laptop mode. Alternatively, both navigation buttons **166**, **168** may be usable in either the laptop mode or the easel mode, but their functionality may vary. For example, when the portable computer **100** is in the easel mode, the default action for the navigation button **166** may be channel selection whereas the default action for the navigation button **168** is to access the "home" screen. Furthermore, the portable computer **100** is not limited to the use of two navigation buttons and may instead comprise only a single navigation button or more than two navigation buttons, any of which may be disposed in the locations described above (e.g., on the rounded portion **120** of the base **104** or on the keyboard **106**), or in other locations on the portable computer.

As discussed above, according to one embodiment, the function or display content and/or display orientation of the portable computer may vary when the portable computer is configured from the laptop mode into the easel mode, or vice versa. For example, as discussed above, when the portable computer **100** is configured into the easel mode, the visual display on the display screen **110** is automatically rotated 180 degrees such that the information appears "right-way-up," even through the display screen is upside-down compared to when the portable computer is in the laptop mode. In another example, for at least some activities within at least some modes of content (e.g., viewing a photograph or video), when the portable computer **100** is configured into the easel mode, the display may automatically adjust to "full screen view" (i.e., the displayed image or video is displayed on the full screen size, rather than in a window) to allow for comfortable viewing.

In addition, as discussed above, the ability to configure the portable computer **100** into either the laptop mode or the easel mode provides enhanced functionality. For example, when the portable computer **100** is not being actively used, the user may configure the portable computer into the easel mode, and program the portable computer to act as a digital photo frame, displaying one or more photos of the user's choice. In the easel mode, the portable computer **100** may occupy a smaller footprint on a surface than in the laptop or closed modes because the base **104** and display component **102** are upright, as illustrated in FIGS. **4** and **5**. In addition, because the portable computer can act as a passive information and/or entertainment device, such as a photo frame or clock, as discussed above, the portable computer may provide a useful function even when not being actively used by the user, and may do so (in the easel mode) without taking up much surface area.

It is to be appreciated that although the portable computer **100** is often referred to as being in either the laptop mode or easel mode, other modes or configurations are also possible. For example, as discussed above, because the portable computer **100** can be configured from the closed position, through the laptop mode into the easel mode by rotating the display component **102**, a number of configurations are possible in between "true" laptop mode and "true" easel mode. Each different configuration may invoke different functionality and provide a user with a different aspect of a graphical user interface.

In another example, the portable computer **100** may be configured into a "frame" mode, as illustrated in FIG. **26**, in which the portable computer is placed on a surface **212** with the keyboard **106** "face down" on the surface **212** and the display **110** facing upward. In the frame mode, the display component **102** may be at a similar orientation, and angle **134**, with respect to the base component **104** as in the easel mode. However, rather than the base component **104** and display component **102** being oriented vertically with respect to the surface **212**, as in the easel mode (in which the portable computer forms an inverted "V" as discussed above), in the frame mode, the base component **104** may lie flat on the surface **212**, as shown in FIG. **26**. In one example, software and/or hardware protection may be provided for the keyboard to prevent keys from being pressed (or to prevent the portable computer from responding to pressed keys) when the portable computer is in the frame mode.

Similarly, referring to FIG. **27**, there is illustrated another configuration of the portable computer **100**, referring to as the "flat" mode. In the flat mode, the display component **102** may be rotated (or opened) to approximately 180 degrees with respect to the base component **104**, such that the base component and display component lay flat on a surface, with the keyboard **106** and display screen **110** exposed, as shown

in FIG. **27**. Unlike the easel and frame modes, in which the keyboard may be concealed and not easily accessible, in the flat mode, the keyboard is accessible and usable. In addition, as discussed above, the visual display on the display screen **110** may be automatically rotated to accommodate comfortable viewing of information by persons located in different positions relative to the base component **104** or display component **102**. The visual display on the display screen **110** may also be manually adjusted by a user using, for example, the keyboard **106**, touch pad **108** or mouse (not shown), scroll wheel **132** or navigation buttons (not shown). For example, if a user (located at position A) wishes to display information for a person located opposite the user (at position B), the visual display may be rotated (automatically or manually) 180 degrees such that the information appears "right-way-up," to the person at location B, even through the display screen **110** is upside-down for that person. Similarly, in another example, the visual display may be rotated (automatically or manually) 90 degrees such that the information appears "right-way-up," for a person at location C. In one example, a user can "toggle" the visual display among various orientations. For example, a user at location A may have the visual display facing themselves while using the keyboard **106** or other controls to change or access information on the display, then toggle the display orientation 180 or 90 degrees to display the information for persons at locations B or C.

According to another aspect, system and interface streamlining may be employed with devices of multiple configurations. In some embodiments, multiple configurations include a traditional configuration, for example, a configuration similar to a laptop device, and also include new configurations, for example, an easel mode. Some examples of streamlined devices have the ability to change between traditional configurations and other configurations. The change between configurations may change the I/O profile of the device and hence impact the user's interaction with the device itself and any content displayed on the device. In one embodiment, the user interface is responsive to changes in configuration. In another embodiment, the user interface is responsive to changes in I/O profile.

According to another aspect, the streamlining of the user's multi-media experience incorporates the device the user uses to interact with multi-media sources, whether the sources are on-line or provided by the device itself. Streamlining of the device includes developing consistent user interfaces for the user to access all features presented. The device's graphical user interface layer is customized to the I/O interfaces provided. In one example a device is provided in the form of a portable computer configurable between a laptop mode (in which the portable computer has a conventional laptop appearance) and an easel mode in which the base of the computer and its display component stand upright forming an inverted "V," a closed mode, a laptop mode, an easel mode, a flat mode and a frame mode. According to one embodiment, each of the display modes may employ different I/O profiles.

Some of the aspects may be better understood through the use of examples demonstrating the interactions between a system, the system user, the interfaces provided, and the accessed content. The user experience is improved through simplification of the interactions with the user device—depending on the device's configuration the only activity required by the user may be to use a scroll wheel to identify selection and a button to execute the selection. Moreover, the user experience is enhanced by permitting the user to select the I/O profile s/he is most comfortable with and even select multiple I/O profiles or device configurations depending upon the context presented to the user. It is to be appreciated that adaptations to the user interface layer that maintain consistency while permitting different I/O profiles should be viewed as part of the invention.

The examples of user interactions are provided for the purposes of illustration and should not be viewed as limiting the invention to the interactions described, nor the specific presentations discussed, and it is to be appreciated that other interactions are appropriate and even desired in different circumstances. Additionally, different configurations of the device itself will provide for different user interactions, for example, based on additional hardware not available in another configuration.

Examples of User Experience

In one example, some typical user interactions with electronic content are illustrated. The user interactions occur in accordance with various aspects of the systems and methods for streamlining user interaction with electronic content. In some embodiments, the streamlined device is adapted to accommodate multiple users. In one embodiment, the user identifies him/herself to the device by entering a user name and password. Once the user name and password is accepted the user may begin interacting with the device, and if desired through the device to other content. According to another embodiment, the device may display a "users" screen, incorporating a visual representation for each user. In response to selection by the user of the visual representation the user is identified. Identification may optionally include a password challenge/response after selection of the visual representation. In some embodiments, a camera is available through the user device, and the user's visual representation may be generated by taking a snapshot of the user.

In one embodiment, that act of identifying includes access to remote storage associated with the device and/or the user. Remote storage is accessed to retrieve any global profiles that may exist for the user, and more specifically, any changes that may have been made to the user's global profile. In some embodiments, a local copy of any profile is stored on the device, and the remotely stored profile is used to identify any changes. Changes to profiles may be copied to the remote location or changes in the profile may be retrieved from the remote location. In one example, the local and remote profiles are associated with a revision date. The most recently revised profile may be used as the most up to date profile, with a different version receiving modification as necessary to correspond.

In one alternative, a remote profile may be maintained for the device itself. In another, the device profile may contain information on a number of users. In some embodiments, remote access is used to retrieve configurations and/or settings maintained for any of the device, the user, and groups of users, alone or in combination. According to one aspect, remote storage and/or remote access to user configuration comprises one element of an example system for streamlining user interaction with electronic content.

Once a user is identified (identification may occur by default if only one user has accessed a particular device) the graphical user interface presents a default view of the electronic content available on the device. In one embodiment, the view presented is responsive to the configuration of the device. According to some embodiments, device configurations may be determined using a sensor embedded in the device. In one example, a sensor is used to provide a signal and from the signal the device's orientation is determined. Alternative methodologies are employed in other embodiments for detecting and determining a device's con-

figuration. In one alternative example, I/O devices may be enabled/disabled based on the physical configuration of the device. For example, during a transition from laptop mode to easel mode, various I/O devices that become inaccessible may be deactivated. Determining what I/O devices are still active and/or available permits identification of the device's configuration. In other embodiments, an accelerometer may be used to detect a device configuration. In one example, a device may be a portable laptop computer. The portable laptop computer may have multiple configurations, including a laptop mode, an easel mode, a frame mode, a flat mode and a closed mode.

In the illustrated example, FIG. **1**, the user device is configured in a laptop mode, and has an I/O profile (a set of I/O devices) that one would normally associate with a laptop computer. In this example, the I/O profile includes, in some embodiments, a keyboard, a touch pad, buttons, web cam, and a scroll wheel. The graphical user interface is configured to present a default view that provides the user with contextual options. In this example the present context for the user includes "lean forward" viewing and the computer operations one would typically associate with user of a laptop. Other contexts arise based on configuration of the device (for example in Easel mode) and the computer tasks the user wishes to perform. For an identified context a default is provided for the user eliminating the requirement of making configuration choices, however, the user is still permitted to accesses the configuration directly to customize it.

Shown in FIG. **2**, is an example of a page of the device's home view (**200**). The home view organizes user interface elements into a mapped based presentation and separates the presentation into logical units based on a single displayed screen, i.e. a page. One function provided by the home view is to serve as an organization of interface elements and/or navigation tools that maps visual representations of available content into a plurality of views of the available content. The home view is also configured to present summarized views of information to the user, so as to reduce the volume of information that a user needs to process in order to access content. In some embodiments, the mapped based interface is also configured to group like computer operations into a section of the map. Typically, grouped selectable computer content includes mappings to other groupings of lower level functionality. For example, high level navigation options are, typically, first presented to the user. The high level navigation options provide a summarized view of the available content, making content based selections easy to appreciate and accomplish. A user selects a high level navigation operation to navigate to more detailed operations. In some embodiments, the more detailed operations are grouped based on a mode of content. Modes of content may include for example, media, channel, connection, application, and web, among other options.

According to one embodiment, high level functions and low level functions are segregated based on proximity to displays of sources of digital content. For example, a visual representation that maps to the source of digital content is included in a lower level of functionality than the view that organizes the presentation of the visual representation. A view that presents the digital content source itself, is grouped at a lower level than the visual representation that maps to the digital content source. In another embodiment, interfaces that provide navigation operations to digital content form a layer of the graphical user interface, and interfaces that provide interaction options to digital content form a lower layer. In one embodiment, the home view includes maximal display thresholds configured to improve the ability of the user to absorb the information presented. In some embodiments, a maximal number of visual representations per screen is set. In one example, the maximal number of visual representations is used to define a GUI page. In another example, the maximal number of visual representations is associated with a maximal number of full view visual representations, and the page is configured to include portions of views of other visual representations available on adjacent pages. A computer operation that would cause the computer device to exceed the maximal number results in the creation of a new display page. The home view is organized into as many pages are required in order to maintain the maximal threshold of display items.

Typically, the home view is configurable by the user. New items may be added, existing items may be moved and/or removed based on user selection. The home view further comprises some visual representations that can not be removed. Commonly requested system operations have visual representation displayed on the home view that can not be deleted. According to one embodiment, a user may reorganize the display but not remove system operations. For example, visual representations that map to system operations (e.g. communication configuration and hardware configuration) cannot be remove from the home view. Additionally, some system operations will always be displayed through the home view regardless of frequency of use. Positioning of visual representation is also organized and managed in the home view. Preferably, organization and/or management occurs automatically based on default settings selected for the user. Alternatively, organization and/or management may occur dynamically. For example, a user may make changes to organization and/or management settings on the fly. In another embodiment, default settings control organization and/or management, and an interface is provided to permits a user to makes any changes to the default settings. And in another embodiment, a user may be queried on preferences, the responses are used to establish defaults for operation.

In some embodiments, frequency of use of the visual representations is used to sort the presentation of visual representations on the home view. More frequently accessed visual representations are displayed at a higher position on a page and less frequently accessed representations are displayed at a lower position on the page, and may cause the computer device to display the visual representation on another page.

In a typically configuration, visual representations are organized based upon creation time, although certain visual representations take precedence in the display. According to one aspect, display precedence is established from left to right and from top to bottom. In one embodiment, the visual representation displayed in the upper left portion of the display screen is associated with the highest precedence. Precedence in the display may be influenced and even ignored with respect to certain system operations and the visual representations that map to them. For example, a visual representation mapping to display for a user's bookmarks may appear in the upper left corner. According to one embodiment, the positioning of the familiar option relating to bookmarks as the visual representation of the highest precedence provides users with an option familiar to traditional use of computer systems. Although presented as a streamlined interface element, the bookmark visual representation is configured to evoke familiarity in the typical computer user.

According to another embodiment, the visual representation that maps to the computer functionality for creating interacting with a new web page is the only representation that has a fixed position, relative to the display precedence. In one example, the element for triggering interaction with a new web page is always display in the bottom right corner. The other visual representation may be reshuffled based on frequency of use, and in other embodiments a user may also reshuffle the visual representation by drag and drop procedures, however the element for triggering interaction with a new web page remains in the bottom right corner, and in one example, will move to a new page in response to a request to display an new web page element when the element is already displayed in the bottom right corner of a page. Drag and drop operations may be associated with a drag threshold. In one example, a drag threshold is applied to require a small movement of the identified card before the device executes the drag operation. The drag threshold may be measure on the order of pixels, and may be any number of pixels that prevent accidental dragging in response to the user attempting to click on a card. In one embodiment, the drag threshold is set to 5 pixels. Other thresholds may be used, 2, 3, 4, 6, . . . pixels as examples.

Other display precedence may be employed. For example, display precedence may be configured based on user location and language convention for the user location. The written English language is read from left to right and from top to bottom; however, other languages are not. According to some embodiments, display precedence and any corresponding animations are configured to correspond with the conventions of the local language, for example displaying from right to left.

Referring again to FIG. **2**, shown is an example of a page of the home view, with user interface elements organized to present the user with summary information of available content. Shown in FIG. **2**, at **202**, is a representation of picture and video content available to the user. At **204**, a visual representation of customized content is available. The customized content (discussed further herein) comprises rss items from a web location distributing via an rss feed. In example shown, **204**, comprises a channel card. The channel card is configured to allow easy interaction with a plurality of rss items, and further configured to be responsive to both lean forward interactions and lean backward modes of interaction. The other user interface elements include, for example, visual representations of web based content, specialized user interface elements for providing customized interaction with web based content in the form of channels, and system elements.

A typical activity for any user includes reading his/her email. The user may observe an e-mail from for example, the user's credit card company, Chase. The home view (**200**) is the default vehicle through which a user interacts with the device and with electronic content displayed on the device. The home view presents an organization of other interactive elements (**202-216**). Accessing e-mail occurs in response to selecting the visual representation (**208**) that maps to YAHOO? MAIL content. Upon selecting (**208**) the device executes a mapping from the visual representation to the content and in response the device presents a first view of the mapped content. According to one embodiment, in response to selection of a visual representation mapping to content of web page a web page view is displayed. The web page view is a zoomed in expression of the web based content mapped by the visual representation.

Once a user reaches the web page view (**300**) FIG. **3**A, the user may interact with the content shown. Although it is to be appreciated that other representations may mapped to different views, and different view may be used to map to further views. (**302**) shows an e-mail being reviewed by the user, and more specifically an e-mail from Chase Bank indicating that the user's credit card statement has issued. The body of the e-mail (**304**) includes a link (**306**) for accessing Chase's website. Selecting the link invokes an open new page view operation by default, and in response to selection of (**306**) the user sees an animation returning the user to the home view (**200**). The visual representation for "Browse the web" (**214**) reveals the creation of a new visual representation for accessing web content (**216**) by sliding away from a new visual representation the takes the former place of (**214**). The computer system displays an animation that shows the computer display zooming into the page view (**300**) of element (**214**), shown in FIG. **3**B. The user logs in and reviews his/her balance, shown in FIG. **3**C at (**350**). The web page view further comprises navigation element (**352**). The user selects (**352**) to return the home view (**200**), selects (**216**) to access a new web page and in response a new web content visual representation is created, further the device shows the display zooming into the new content.

FIG. **5** displays a quick access view (**500**). As the new card has not yet been mapped to content, the device displays content options in order to generate a mapping. In one example, the content options may be based on frequency of access. Shown at (**502**) are visual representations generated from the most frequently visited content. Selecting any of the visual representations in the body (**502**) causes the device to associate the mapping with the new card and zoom into the selected content display. At (**504**) provided as an element of the view's header (**506**) is a bookmarks control. Through (**504**) bookmarks control a user may access content not display in the frequency list (although a user may also enter a uniform resource identifier at (**508**).

In response to the selection of bookmarks a list of bookmarked content is displayed for selection, FIG. **6**, **600**. Upon selecting (**602**) a mapping to the bookmarked content is associated with the new visual representation. In one alternative, a user may enter a uri for a online source to associated with a new visual representation. The computer zooms into the selected content and in this example, displays the web page view for (**602**), Bank of America's (BOA) web site, shown in FIG. **7**A at (**700**). The user logs in at (**702**) and is able to pay the Chase bill just reviewed, shown at FIG. **7**B, (**700**). Having visual representations mapped to content available, improves the user's ability to transition between content views. By selecting the navigation element (**752**) the user is returned to the home view, FIG. **8**, (**800**), showing the visual representation (**802**) mapped to Chase's web page content and the newly created visual representation (**804**) mapped to Bank of America's web site content. Selecting (**802**) returns the user to the Chase content with the user's state preserved from the last visit, FIG. **3**C, (**350**). The user is able to immediately review the statement balance, and by selecting navigation element (**352**) return to the home view (**800**) select (**804**) and enter the amount due for the Chase credit card at (**754**).

It is to be appreciated that visual representations mapped to computer content facilitate transitions between content, and further by providing state preserving representations a user is able to quickly retrieve and employ information learned from content.

According to another aspect, the selection of a new visual representation is configured to employ a timer. According to some embodiments, the timer is configurable based on user selection, so that the animation may take longer, shorter, and

in some embodiments the user is permitted to disable the animation entirely—in one example this is accomplished by setting the timer to allow 0 seconds for the animation, in another example the animation is simply disabled. In some embodiments, the timer is configurable by the system. Over the course of use, the allotted time may be reduced by the system automatically. Once a user has reached a certain time on the streamlined device, the animation may be automatically disabled by the system. For some embodiments where the timer may be configured based on time of use, different timers may be employed for different user profiles. Thus an experienced user may no longer see the animation, whereas a novice user on the same device would see an extended version of the animation.

Graphical User Interface

Referring again to FIG. **11**, there is illustrated a block diagram of one example of an architecture of the portable computer including a map user interface. The user interface "home" screen **170** that displays a plurality of modes of content **172**. In the illustrated example, the home screen **170** contains five modes of content **172**; however, it is to be appreciated that the home screen may include more or fewer than five modes of content and that the modes of content may differ from the examples discussed. It should also be appreciated that different architectures may be invoked in response to different device modes. For example, a portable computer in laptop mode may display a home view as discussed with respect to FIG. **11**, when configured in Easel mode, user is presented with a Channel View. Shown with respect to FIG. **23** is an example of a portable computer set in Easel mode, displaying a channel view. The Channel view may also display a plurality of modes of content. In FIG. **23** shown are visual representations of content (**2304-2308**) with associated mappings.

According to another aspect, streamlining the presentation and integration of features and services includes simplifying the I/O devices that a user needs to operate in order to access features of the computer system and the features of any available service. According to another aspect, streamlining includes developing consistent visual representations of available content (whether on the computer system itself or from service providers). In another aspect, the organization of interactive elements and responsiveness of the organization to navigation options, device configurations, and user preferences improves the user's ability to interact with the computer system and its content. In one embodiment, system features and web features are consistently presented as cards for the user to interact with to achieve their computer objectives. In some embodiments, cards comprise part of an interface layer between a computer user and a user's computer based objective and/or computer operation. In some embodiments, the number and type of cards are presented in as few as three classes and/or types. Each card for example may be similar in aspect to the other, but each performing a different class of function on the computer system.

Referring to FIG. **9**, shown is a conceptual model **900** of an example graphical user interface. As shown, in FIG. **9**, through a streamlined device **901** a user will interact will a number of views of computer based content. In example model **900**, depending on the device's configuration a user will be presented a home view **912** or a channel card view **914**. Conceptually **910** forms a layer of the mapped based user interface, wherein the layer is configured to organize, manage and display streamlined views to the device's user. Layer **910** organizes, manages and displays objects of layer **920**. Layer **920**, according to some embodiments includes cards **921** which are selectable visual representations that are mapped either to computer functions or available computer content. Cards further comprise web cards **922**, that map to views of web content including web pages; channel cards **924** that map to customized views of content including web based content and picture and video content; nascent cards **926** that map to system functionality; system cards **928** that map to system functionality; and shared cards **929** that can be any of the former discussed cards shared from another user and/or streamlined device. The card layer **920** maps either to computer functionality executed upon selection or additional views to provide interactive displays to the device' user, for example, the views illustrated in layer **930**. Page view **932**, according to one example, is a zoomed in expression of a web page. At **940** shown is another layer which includes a screen saver view, **942**. In one embodiment, the screen saver view is a passive view. In one example, the screen saver view may be activated by the computer system remaining idle for a period of time. In one embodiment, the screen saver view displays content from channel cards designated by a user in an options menu. In another embodiment, the screen saver view displays content from a pictures and video card. In another embodiment, the screen saver view displays content from a shared card.

According to one embodiment, channel card view **914** comprises a view of the channel cards that are available to a user, and in another embodiment includes a channel selector (not shown). The channel selector is a selectable display configured to be responsive to manipulation of a scroll wheel. In one example, the channel selector is configured to display a rolodex of available channel cards and manipulation of a scroll wheel flips through the visual rolodex. Selection of one of the channel cards invokes any of a channel page view **934**, content menu, and a channel card full view, depending upon the device's configuration, and in some examples the result is responsive to where on the card a selection was made. Various cards, depending on the content mapped to, may also provide other views for rendering and providing for user interaction with content, for example, time, **939**, album, **936**, and lens, **938** views. It is to be appreciated that the conceptual model illustrated in FIG. **9** is only one example of a conceptual model of the graphical user interface for streamlining user interaction with electronic content. Other conceptual models may be employed, for example only some of the layers may be employed, additional layers may be used, and different segmentations of the layers may be provided.

According to one embodiment, a method of presenting a streamlined graphical user interface for a streamlined device includes an example process **5000**, FIG. **50**. Process **5000** provides for organizing a plurality of views and GUI elements into a consistent presentation for user interaction. At **5002** provided is a first visual representation for displaying multiple content modes mapped to a view of computer content. At **5004**, a plurality of visual representations are organized by type of computer operation. At **5006**, the graphical user interface presents higher level operations to users as a view including a group of visual representations. AT **5008**, a user is permitted to select from the group of visual representations to navigate to lower level functions provided by different views of computer content. At optional step **5010**, a user may be permitted to select from within different groups of visual representations to navigate to further lower level views of computer content.

According to another aspect, layers of the conceptual model are configured to respond to device configurations by defaulting and/or transitioning to different views based on

device configuration. Typically a device configured in a laptop mode displays a home view, **912**, to a user as the default view. In response to a transition in mode between laptop and easel the computer transitions the computer display from the home view, **912**, to the channel view, **914**, as the default. A user may elect to change the default view, for example by selecting a navigation button that executes a return to the home view. In one example, **168**, FIG. **17**, is configured to return a user to a home view in response to selection of **168**, when the computer display is not on the home view. In the home view, a user may invoke a channel card view, **914**, by manipulating scroll wheel, **132**.

Home View Embodiments

Referring again to FIG. **2**, shown is an example page of a home view, **200**. Home views according to various embodiments are configured to render consistent organization of elements of the graphical user interface. Each page rendered in home view comprises a home navigation tool **250**, a header **252**, and a web search box **254**. For home views which include multiple pages, a hint or cut out of adjacent displays are rendered at **256**, for example. Hint or cut outs of adjacent displays may also occur at the bottom of the display screen, the top of the display screen, and both top and bottom, where multiple adjacent pages are present. **250**, home navigation tool is responsive to the context in which it is executed. For example, the home navigation tool, **250**, when selected causes the computer to display the last accessed view before the computer displayed the home view. Where a user navigates to the home view, **200**, from a web page view, the selection of the home navigation tool **250** caused the computer to display the previous web page view. In other examples, the home navigation tool permits, toggling between other views and the home view, as illustrated in FIG. **9**, at **932-939** and/or **914**.

According to some embodiments, the web page view includes a navigation tool, **350**, FIG. **3**C, and in response to selection, causes the computer to display the home view, **200**. Other elements included in the home view, for example, header **252** are configured to provide consistency in the home view across pages and in some embodiments across the user interface. Each page of the home view, **200**, further comprises a body, **258**, in which cards **202-216** are displayed. The body is associated with a maximal display threshold. The maximal display threshold governs the number of GUI elements displayed per home view page. In one embodiment, the displayed elements may comprise cards, and the maximal display threshold is set to display twelve cards. In addition to the maximal number of displayed elements, the home view may also comprise indicators of adjacent content at **256**. The device generates a new page display for the home view, **2000**, in response to exceeding the maximal display threshold.

Home view **200** is the default view in laptop mode, and may be implemented as the default view in other device modes (e.g. frame, easel, flat modes). According to some embodiments, the home view is the primary mechanism for permitting users to access cards and navigation through content viewed on the device. In the home view a user can access open web sessions, view and manage their channels, initiate new web sessions, and launch other activities.

Cards, e.g. **202-216**, form comprises a plurality of types. Some card types are organized by function, some by content. The home view is comprised of various cards, each card providing access to computer based content. According to one aspect, cards can be thought of as the building blocks of the user interface, providing access to a plurality of views and/or content. Indeed, cards as elements of the GUI, are configured to be shared across users and across other streamlined devices. The ability to employ the features and functions of card based elements may be limited to streamlined devices, although cards and settings may be shared with traditional devices.

Shown in home view **200**, are web cards **206**, **208**, and **216**, channel cards **204**, and **210**, further shown in home view **200** are special system cards that map to content and system operations, for example bookmark card **212**. The bookmark card **212** is configured to provide traditional computer operations associated with conventional systems and browsing methods. The bookmark card serves as learning tool, to provide features with which user are familiar in a new format that encourages further integration of card based interactions. According to one aspect, card interfaces are generated by a user for each web based interaction, eliminating the need for convention navigation in the form of bookmarks. Another example of a system card appears at **214**. **214** maps to functionality that when selected causes the computer system to execute a web card generation process. FIG. **10** illustrates an example generation process, **1000**. Example processes, **1000**, begins at **1002**, in response to selection of a card or embedded web link (e.g. **214** of FIG. **2**) that is associated with a mapping to functionality that generates a new web card. For example process **1000**, may be initiated from a page view of a web card in response to selection of link. According to one embodiment, the behavior of the streamlined device depends on instruction embedded within a selected link. In particular, the device in response to selection of a navigation link navigates to the identified location in the same page view. If the link encodes an instruction for open in new window and/or open in new tab, the device in response to selection generates a new card and displays the page view of the new card. Alternatively, defaults may be established for link handling, including a default for selection of a link contained inside an e-mail, which may default to a "new card" mapping, whereas in some embodiments, links directed to the same domain as the current view default to navigation functionality within the same window. In other words, in response to a selection of a link within a certain web-page, directing navigation to another location with in the same web page, the default functionality executed, caused the device to navigate to the selected location within the same window.

According to another embodiment, handling of web links may also be governed entirely by the settings contained in the selected link. For example, the device may execute process **1000** in response to execution of a link including the instruction to open in new window. The device may also execute process **1000** in response to execution of a link including an instruction to open in a new tab. In one embodiment, links without such references are processed by the web page view navigating to the linked location without invoking process **1000**, for example.

At **1002**, the mapping is executed and the computer device determines its state at **1004**. The state determination is configured to identify a current view setting for the device. Current view setting may be limited to an indication that the device is current showing the home view. At **1006** Yes, the device is currently showing the home view, and the device executes a card generation animation, at **1008**. In one example, the animation causes the device to display a browse the web card **214**, FIG. **2**, sliding away from a new visual representation the takes the former place of **214**. One the new card image is shown the computer display renders an animation the causes the user to perceive zooming into the newly created card at **1010**. Alternatively, it is deter-

mined that the device's current display is not the home view at **1006** NO. At **1012**, apparent motion relative to the user is rendered by the device to provide the appearing of zooming to the home display. Other animations may be employed to establish for the user the perception of motion to the home view. Once at the home view, process **1000**, proceeds as before.

According to one embodiment, the home view, FIG. **2**. **200**, is configured to manage and organize cards. The home view provides a simple and convenient mode of navigating through the features and content accessible through the device by organizing and managing cards.

Card Examples

According to some embodiments of systems and methods for streamlining user interaction with electronic content, visual representation that render computer operation and/or content in a consistent manner further comprise cards. According to one embodiment, cards may further comprise types, including web cards, which map to active web pages. In some embodiments, device configuration sensitive displays are provided through a graphical user interface. In some embodiments the device configuration sensitive displays include cards. Cards may come in a number of forms. In some embodiments cards may be classified according to the functionality that they provide to a particular user. For example, system cards provide and display computer system functionality that maybe frequently accessed during ordinary computer user and/or may be required for computer use. In some embodiments, web cards provide a user interface for web based content and/or web based activity. In some embodiments, channel cards provide additional features that enable a user to better interact with web based content, and in another example, channel cards provide interactive views by utilizing different content presentations provided by a web source. Consistent user interfaces provide an access layer to system and web based content. Consistent user interfaces are used to access web based content, and even content and applications provided by third parties.

In one example, a web card presents a thumbnail view of the current state of the web page. In another example, the web page card presents a cut out view of the web page based on computer focus within the page at the time the web page view was exited. FIG. **14** illustrates, according to one embodiment, the behavior and rendered display of certain cards responsive to computer focus and selection by a user. A card may be in a number of states based on computer focus. One example of computer focus would include "hover" **1404**—hover indicates the movement of a pointer, typically represented by a white arrow on the computer system display, over a card. A card may be in a normal state **1402** when not in focus.

Focus is intended to include any identification by the computer system of the card, short of execution of the mapping associated with it. For example, focus should include identification by tabbing through available cards, identification by using hotkeys, among other options that result in computer focus resolving on the card. The terms computer focus and focus should be read to include hovering over a screen element, tool, or other visual representation displayed on a computer system display. In one example, focus follows a displayed pointer, and movement of the pointer with, for example, a mouse causes the computer system to resolve computer focus on the visual object under the pointer display. Selection by a user or a computer system may include focus and visual objects displayed on a computer system display may be selected by moving a displayed pointer. In some embodiments, selection may be accomplished by clicking on a visual object using a pointer displayed on the computer screen. A second "click" may then cause the computer system to execute functionality associated with the visual object. Execution should be read to include initiating an operation associated with a visual object, in one example execution will include clicking on a visual object (single or multiple "clicks"), by positioning a pointer display over the visual object and depressing a button to initiate the operation.

Focus may be resolved on a computer system by analyzing content intended to be displayed before its display on the computer system, additionally focus may be responsive to actions taken on the display through for example pointing devices.

According to one embodiment, when a web card or channel card appears is in a hover state **1404**, additional options are display in the card header, for example at **1450**. The additional tools displayed in the card header permit a user to select the options associated with the card. The options view for a card **1406**, displays available selections contained in the options. For a web card **1410**, the options include make a channel **1452**. The selection of make a channel at **1452** causes the device to execute functionality that transforms the web card into a channel card. The transformation from web card to channel card includes transforming the display image of the card element on any corresponding view.

Typically the transformation may only be made for a web card that references a content including a rss feed. The items in the rss feed are configured into a customized presentation—as for example a channel card **1412** (discussed further herein). For a channel card **1412**, additional options are include show in screensaver, for example. Other states may impact the display of web card including a drag and drop state. Upon focus, the additional tools will resolve in the header section of the card, the additional tools may be displayed as icons, as shown in FIG. **14**, and may also be rendered as selectable text options include "bookmark," "share," "options," and "close." If a user depresses the button control and does not release, the user may user drag and drop the card within the home view. The card may be dragged across pages of the home view, and the user may reorder the presentation of cards in the home view using multiple drag and drop operations. According to one embodiment, as a card is dragged across the home view, all displaced cards will appear to move into new places.

According to another aspect, computer content and interactive functionality is recast into cards. In one embodiment, the card comprises a visual representation of web content that simplify the user's interaction with even the most sophistication on-line tools. Cards are configured to present a summarized view of available content and/or present a visual indication of available functions. According to one embodiment, cards form a part of the structure of the graphical user interface between the system and the user. In various embodiments, cards are configured to be context and/or content sensitive. Some cards are configured to be persistent. Persistent card may be removed by an affirmative act of the user

With cards, content can be easily and visually absorbed by a user. In some embodiments, cards serve to maintain a current state of the user's activity. And in some embodiments, cards also serve to focus the displayed content on contextual information. Cards may be configurable by the users. Configurations options are presented to the user consistently. In some examples, this includes displaying

consistent animations designed to draw the user's focus to the particular activity and to provide comfort level for the activity being displayed.

Shown in FIG. **43** is an example process **4300** for streamlining user interactions with computer content. The process includes presenting a consistent look and feel for user access to computer operations and computer content for user interface elements that also provide for a reduction in decision making requirements imposed on a user during conventional computer use. At **4302**, a user is presented with a first visual representation in a computer display, the visual representation is responsive to computer focus and at **4304**, and the user is permitted to resolve computer focus by selecting the visual representation. Selection and focus can be thought of in terms of a visual pointer display on the computer system display, by moving the pointer over an object displayed on the computer display, computer focus may be resolved on the visual object. Alternatively, a user may have to indicate a selection of the object by clicking on a mouse button for example.

According to one embodiment clicking is not required. In another embodiment, the pointer being displayed above a visual object activates a "hover" state. In response to hovering, computer focus is resolved on the visual object. At **4306**, a focus visual representation is displayed to the user. According to one embodiment, the visual representation and the focus representation are configured to have common elements, and in particular, a header and body display for rendering computer content associated with the visual representations. The focus visual representation including a header and body display summarizing at least one of computer content and computer operations are shown at **4308**. The visual representations present a multitude of computer content in a streamlined form, in other words, the visual representation forms an indirection layer of functionality that provides a window into digital content, and/or computer operations linked to the visual representation. In particular, a visual representation mapped to a web page for example, provides a view of the web page in the body of the visual representation and provides additional information about the web page in the header display. The header display may also include tools for providing easy access to computer functionality associated with the web page and/or its content. In one example the header display only display the tools in the focus visual representation so the initial view of the content is not cluttered with tools that are not needed. Further, in one embodiment, the tools only display in response to focus, in other words, only when a user indicates they are necessary by moving a display pointer over the visual representation. Further computer logic may be embodied in process **4300**, responsive to a display position of a pointer displayed on the computer screen. In response to the display position of the pointer occupying the same location as another visual object, computer focus is resolved on that object, causing the computer system to determine functionality associated with the object.

In one example, the object is a visual representation, and in response to moving the pointer over the visual representation, the computer is caused to display a focus visual representation associated with the visual representation. In one example, computer focus remains with the focus representation and functionality associated with the focus representation is made available for execution. Other operations including display of a header responsive to focus may be executed. At **4310**, a mapping associated with at least one of the focus visual representation and the visual representation is executed causing the computer system to navigate to a content view. The content view may include a display of computer operations. In one alternative, the content view provides an interactive view of computer content. In one example the computer content, comprises online content viewed through a web browser. In another example, the content view is presented in a similar format as the visual representation used to navigate to the content. In one particular example, the content view includes a header display and a body display, and the content is displayed in the body portion. The header portion provides additional information on the content, for example a title, and may further provide additional tools that are responsive to focus. Again providing tools that resolve when needed and disappear when not reduces the amount of information a computer user need to assimilate in order to use a computer system.

All computer content and operations can be configured to display in visual representations and respective focus visual representations, providing a user with a streamlined presentation of computer content and operations. According to another example, different content types are presented through visual representation of a similar format. In one embodiment, the visual representations comprise cards as discussed herein.

A process **4400** may be invoked by streamlined computer system as part of process **4300**. Additionally, process **4400** may operate independently or be called from other processes. Shown in FIG. **44** is a process **4400**, for permitting a user to interact with computer content. At **4402**, a computer system displays a first content view. The first content view is configured to display in a similar format as a visual representation selected by the user to navigate to the content view. In one embodiment, the first content view includes a header and body display. In another embodiment the content view is a zoomed in view of the visual representation used to navigate to the content view. At **4404**, an enlarged view of the first visual representation is displayed. In one example, the content view comprises a web browser view of a web page displayed in the body of the content view. The visual representation used to navigate to the content view displays a portion of the web browser in the body of the visual representation. At **4406**, a user is permitted to interact with the content displayed in the body of the content view. The user is further permitting to access options associated with the content through the header display. Optionally, further computer logic may be included in process **4400** for presenting focus and unfocused views of the header in the content view.

According to another aspect, cards types should be clearly defined by color scheme and appearance, while at the same time maintaining a similar format. For example the similar format should include header placement and sizing, display of tools, title and frame size. In one embodiment, a color scheme configured to differentiate card types provides for web cards with white headers with the content displayed on the web card showing as a thumbnail of the current state of the page. Channel cards are configured with black headers, and the content presented in the channel card comprises a simplified representation of web content based on RSS feeds or custom visualizations of some non-RSS websites. Customized visualizations may be pre-loaded on the device for specific websites, or may be provided as part of a remotely stored device profile and/or global profile. Updates to the device profile and/or a global profile would include development of customized visualizations of non-RSS websites, and access to remote storage trigger delivery of the customized visualizations. According to one embodiment, only

sites for which RSS or custom visualizations are available can be displayed as channel cards.

System cards are shown either with blue headers or grey headers. System cards may be further classified to include nascent cards. "Browse the Web" card, FIG. **2**, **214** is an example of a nascent card. The nascent card may be configured so it position is not configurable, nor is a user able to remove the card from the home view, or any view. The nascent card maps to functionality necessary to operation of the streamlined device, and thus no option to close and/or remove it is available. Other system cards are configured to represent activities that have been specifically designed such as for example, photos & video card(s). The other system cards map to functionality also regarded as necessary so that the other system cards can not be deleted, however, the other system cards can be reorganized in for example the home view. Functionality mapped to by the other system cards include communications card, for configuring wireless access of the device, bookmarks for presenting conventional styled web page bookmarks, camera for providing for configuration and operation of a camera, either embedded in the device upon construction, or incorporated through for example a USB port.

In one embodiment, a system card is mapped to functionality to provide a user with streamlined access to web bookmarks. In one example, a bookmark card is provided that is always accessible from the home view. As with other system cards, the bookmark card comprises a header and a body. According to one embodiment, the body display for the bookmark card is unique to the bookmark card. Bookmarks are retrieved and displayed in the bookmark card one at a time. In one example, the bookmark card indicates in the body display the number of the bookmark in the list and the total number of bookmarks available.

According to some embodiments, the interactivity of individual cards is limited to navigation to a page view. For example, a user can not change the content of a card by interacting only with the card. In other embodiments, channel cards, for example, provide a user with the option of interacting directly with the card. Upon hover, channel cards presenting news feeds may resolve navigation tools configured to step through individual rss items displayed in the channel card. Additionally, selection within a channel card presenting a news feed causes the device to execute different mappings depending on what part of the channel card was selected for execution. Clicking directly on an rss feed headline for example, caused the device to execute a mapping to the web page view for that article. Selecting the body of the channel card causes the device to execute a mapping to the channel full view. Selection within the channel full view causes the device to display a content menu, responsive to manipulation of a scroll wheel.

In an embodiment employing a three card presentation, the cards that are presented provide the user with the ability to interact with system specific features. System features may be invoked and display using consistent presentation and/or animation. Consistent presentation of like features may engender a comfort level in the user for new features that appear using the same and/or similar presentation. Additionally, where a user invokes features in a similar or consistent manner, access of new features is facilitated and user comfort level may be increased. For example, a nascent card, is a system card that provides for consistent implementation of user activity and/or a computer objective desired by the user. In one embodiment, the "new card" card is a visual representation of a system placeholder for generation and presentation of new card that a user may created during the course of ordinary activity. By selecting the new card (for example, creating a web card used to interact with web content) a consistent animation may be employed to display to the user the creation of the new web card utilizing the nascent "new card" card. Other system features may be presented through system cards. Typically, system cards will represent functionality used most frequently and/or functionality that should always be available and not subject to removal by a user. Other card types, include web cards that are used to present web content, and channel cards that are used to provide to a user easy and/or consistent access to additional features.

According to another aspect, features of cards may include consistent navigation tools, consistent content display—including limiting the ability to alter content of a card through user interaction with the card, state representative images of content, state and context representative images of content, customized visualization of content, and in some examples customized visualizations include information derived from rss content. In one embodiment, user interactions with cards are also streamlined. In another embodiment, when card configurations and/or card options are selected by a user (if available) a consistent animation is presented to the user. For example, selection of a card's options may cause an animation displaying the flipping of the card and the revelation of user selectable options. Options, for example, may include permitting the content reflected in the card to be displayed as a screen saver. Certain features may only be available for certain cards types. In one embodiment for example only channel cards (discussed in greater detail herein) may be displayed in the screensaver mode, thus only channel cards will display the option to permit display in screensaver. In another embodiment, certain card types may be converted through user selection. In one embodiment, web cards may be converted into channel cards. It is realized that the segregation of functions between the card types may improve user interaction and adoption of the different feature sets available to each.

According to another embodiment, systems and methods for streamlining user interaction with electronic content may include a process for generating new visual representations mapped to computer content. Shown in FIG. **47**A is an example process **4700**, for generating a user interface element. At **4702**, a visual representation associated with a computer operation for creating a new visual representation is displayed on a computer system display. The visual representation may comprise a nascent card. Nascent cards are configured to always be available to a user, that is, they are configured so a user can not remove them. In some embodiments, the position of the display of nascent cards cannot be changed by the user. In one embodiment, the nascent card is always displayed in a home view, at the bottom right corner of a home view page. For a new page this may include the nascent card appearing in the upper left corner of the page, when no other cards are displayed on the same page. At **4704**, execution of the functionality associated with the visual representation occurs. At **4706**, a first animation is displayed to the computer system user showing the visual representation sliding away from its present location to reveal a new visual representation. At **4708**, a second animation is displayed to a user showing the computer system zoom into the new visual representation to present a quick access view at **4710**.

The quick access view is configured to permit a user to select computer content to associate with the new visual representation. In one example, this includes presenting a display of frequently accessed web content (e.g. web pages)

to the user in the quick access display. It is likely that the user will intend to return to a page frequently accessed, in which case, the display will meet the users needs, however, the quick access view is further configured to permit entry of a uniform resource indicator (e.g. a url), and further configured to allow a user to request display of bookmarked locations. At **4712**, a user is permitted to select computer content to associate with the new visual representation, and in response to selection of the computer content, the computer system displays an animation to the user depicting the computer system zooming into a first view of the selected content at **4714**.

In one alternative, new visual representation may be generated without selecting a nascent card, in process **4750**, FIG. **47**B. For example, a web card may include a hyperlink directing a computer system to display the linked web page in a new window. At **4752**, a user selects an open in new window link. In one alternative, the link may include instruction to open an new tab. In response to a request to display a web page in a new window, a new visual representation is generated and associated with a mapping to the web page. The computer system displays a transition from the current web card view to the home view, **4754**, displaying the nascent card. In an optional step, the process zooms out the home view so that the nascent card is rendered on one page. The system presents an animation to the user, **4756**, similar to step **4706**, showing the nascent card sliding away from its position, revealing a new visual representation. The system then zooms in on the new representation, **4758**, displaying a first view of the mapped content, **4760**.

Common Card Configurations

According to one aspect, cards should have common features to promote user acceptance and improve adoption of different cards, while providing familiar a form. According to some embodiments, most cards are configured with a similar anatomy. According to some embodiments, cards comprise certain common elements described with reference to illustrated examples.

With reference to FIG. **15**A shown is an example of a web card when not in focus, however, the common features among the cards are discussed in greater detail. Header **1502** run along the top of the card. The color depends on the color scheme employed to differentiation the type of card: in one example white is used for web cards, black for channel cards, and blue and grey for system cards. Optionally the header includes a favicon **1504** (the favicon may be retrieved from the site being view in the case of web and channel cards and a custom favicon is employed for system cards). The header further comprises a title **1506** for the site or activity conducted, and a body **1508**. In response to focus on a card the display of the card becomes a little larger relative to its display when out of focus and the card controls **1552-1556**, FIG. **15**B, are revealed on the header, when in a focused state.

Card options **1552**, reveals the card options, and may in some embodiments invoke an animation of the card flipping to reveal selectable options. Share, **1554**, is configured to permit a user to share the card with other user. Delete, **1556**, removes the card from the home view. Card controls, such as **1552-1556** are typically not available for system cards, which typically can not be shared or deleted. According to one embodiment, the photos & video system card is configured to display the card options (in one example the photo & video system card permits selection of "Show in screensaver"). **1508**, FIG. **15**A, card body varies by the type of card displayed. In one embodiment, a web card body **1508** comprises a thumbnail of the current state of the web page. The current state thumbnail may be updated. Updates may occur in conjunction with a timer. Typically the timer is set for default operation, and is not configurable by a user, although in some embodiments a user may access and modify an update interval for web cards through system configurations.

The body of a channel card (not shown) comprises a visualization of the rss feed from the web site source. Sites that do not have rss feeds, typically, will not be able to be displayed as channel cards. However, customized visualizations for some static sites are preloaded and for the preloaded static sites an rss feed is not used to display the web site content in a channel card. System card body (not shown) comprises a custom image configured to represent the system activity mapped to by the system card.

Options and Information Associated with Various Card Embodiments

According to one embodiment, selection of the card options icon causes the device to display a visualization of the card turning over. The "back side" of the card, FIG. **16** (showing a plurality of examples of the backs of various card types) comprises the following options: Show as channel **1602**, which transforms a web card into a channel card, and vice-versa, based either upon checking or unchecking box **1604**. If the channel is a photo and video channel, this control reads "Show as channel using [lens]." A lens is a customized visualization for computer content. Shown in FIG. **16** is an example lens "Slideshow" at **1606**.

According to another embodiment, the option for show as channel is either shown as permanently checked for system cards that are always available as a channel (e.g. the photos and video card), or as absent for system cards that are not available as a channel (e.g. a system settings card or communications card). Show in screensaver, **1608**, is an available option for channel cards. Typically **1608** is not an available option for other card types, however, the photo and video system card does permit its content to be displayed in the screensaver. According to one example, new channel cards are configured to not display in screensaver mode by default and this option is not checked for new channel cards. Shared from, **1610**, provides information on the user or device from which the card was shared. According to one embodiment, system cards cannot be shared, and do not display "shared from" information. Additionally, shared from **1610**, does not display for card generated by a present user. In one example, shared from **1610** is responsive to computer focus (e.g. hover). Hovering over the Shared From line, **1610**, causes the device to display an informational bubble with a list of people to whom the card was shared. Other options may be employed for displaying shared from information. Other options may include linking to a display list for share from information, and in some embodiments may include displaying the shared entities on the back of the card without selecting **1610**, Shared From. In such embodiments a maximum number of shared entities may be displayed before requiring selection of a more control. The more control expands on the list of shared entities to provide for listings that do not fit within the space provided on the back of a card.

Shared to, **1612**, provides information about whether and to whom the card has been shared. According to one embodiment, system cards can not be shared, thus no shared to information is displayed. By default shared to, **1612**, does not display until a card has been shared. According to some embodiments, the "shared to" field is responsive to focus. In one example, hovering over the shared to line causes the device to display an informational bubble with the list of

people to whom the card has been shared. Other options may be employed for displaying shared to information. Other options may include linking to a display list for share to information, and in some embodiments may include displaying the shared entities on the back of the card without selecting **1612**, shared to. In such embodiments a maximum number of shared entities may be displayed before requiring selection of a more control (not shown). The more control expands on the list of shared entities to provide for listings that do not fit within the space provided on the back of a card. Optionally the more control may cause the device to display an information bubble containing the remaining shared entities and/or all the shared entities.

Organization of the Home View

Typically, the home view is configurable by the user. New items may be added, existing items may be moved and/or removed based on user selection. The home view further comprises some visual representations that can not be removed. Commonly requested system operations have visual representation displayed on the home view that can not be deleted. According to one embodiment, a user may reorganize the display but not remove representations for system operations. For example, visual representations that map to system operations (e.g. a communication card and a camera card) cannot be remove from the home view. Nascent cards, for example, the Browse the web card, can not be removed from the home view. According to some embodiments, the Browse the web card is further limited in configurability, in that, the positioning of the card will not change relative to the other cards. For example, the Browse the web card will always be displayed last. In other examples, nascent cards may have other positions that do not change, first to be displayed, last displayed on first page of the home view, etc. In some embodiments, even nascent cards may be reorganized in the home view display.

The user interface may include default settings for organization. For example, a default organization for the home view comprises an arrangement roughly based on order of creation, from left to right, top to bottom. Other organization may be employed right to left, top to bottom. In one example, the user of the streamline device is located in China, and the default organization is presented from right to left.

One example default setting for the home view establishes a number of cards to display per page of the home view. In one example the default caused the computer to render twelve cards on a page. In another example, the display of the twelve cards further comprises the tops of the cards on the next page or the bottoms of the cards on the previous page, as appropriate. In one embodiment, the home view includes maximal display thresholds configured to improve the ability of the user to absorb the information presented. In some embodiments, a maximal number of visual representations per screen is set. In one example, the maximal number of visual representations is used to define a GUI page. In another example, the maximal number of visual representations is associated with a maximal number of full view visual representations, and the page is configured to include portions of views of other visual representations available on adjacent pages. A computer operation that would cause the computer device to exceed the maximal number results in the creation of a new display page. The home view is organized into as many pages are required in order to maintain the maximal threshold of display items.

It is to be appreciated the different organization options may be employed for the home view. In one alternative, frequency of use may be employed to organize the cards displayed in a home view. The most frequently accessed content may be display first with the least frequently accessed content being display last. Another option includes the use of last accessed information associated with a particular card. The most recently accessed card may be displayed first and the card with oldest use would be displayed last.

Creating New Cards

An example process **1040**, FIG. **10**B may be executed to generate a new card. Process **1040** is executed in response to a user clicking the Browse the Web card on the home view at step **1042**. In response to the execution of the Browse the Web card, the devices displays the card sliding to the right (or down to the far left on the next row if it is already on the far right) as a new web card is created in its place at **1044**. At **1046** the system renders apparent motion in the display, showing the system zooming into the new web card. At **1048**, the system displays a quick access view configured to generate a mapping between the new card and web based content. According to some embodiments, newly added cards (whether created by the user or received as a shared card from another user) always appear at the bottom of the home view next to the Browse the Web card. In other embodiments, the Browser the Web card may display a different title, for example, "New Card." It is to be appreciated that the title is not particularly relevant to the nascent card, but rather, the functionality for generating new card is.

New cards may also be created on the fly during a browsing session as part of process **1080**, FIG. **10**C. Process **1080** begins at **1082** in response to either a user clicking an "open in new window" link on a web page, or in response to a user executing a keyboard shortcut (e.g. Shift-click) to perform the same function. Additionally links that contain computer instructions to open link in new tab will invoke the same functionality at **1082**. In these cases, the system shows an animation zooming out of the current card to the home view at **1084**, optional step **1086** cause the system to display movement to the last page of the home view (if not there already), at **1088** the Browse the Web card slides out of the way, revealing the new card in its place at **1090**, and finally zooming into the new card, **1092**. Process **1080**, may be implement in association with a timer to govern the overall execution time of process **1080**. In one example, the process and animations should take no more than about half a second.

According to one embodiment, selection of the Browse the Web system card causes the system to execute a process for generating a new web card. As part of the process for generating a new card, the system presents a quick access view to the user. Referring again to FIG. **5**, shown is an example of a quick access view. As discussed earlier, the body **502** of the quick access view may display a frequently accessed list of content. A user may select from the displayed content to generate a mapping for the new cards, and enter the web page view for that content. Additional at **510**, the quick access view presents news from, for example, the device manufacturer. At **510**, news regarding operation of a streamlined device may be shared with the streamlined device user community. Advice on new features may be provided, **512**. And awareness drawn to new features. Hints and suggestions may also be displayed, for example, **514**, referring users to GOOGLE DOCS, and on-line word processing/office suite solution.

According to another embodiment, creation of a channel card is available for sites with rss feeds or sites for which customized visualizations are available. From the home view any web card with rss feeds or with customized

visualizations can be used to generate a channel card. From a web page view, hovering over the option add channel caused the system to display a preview of the channel card. In one embodiment a channel card includes features not observed in web or system card. For example, channel card **204**, includes a display, **280**, for an individual rss item received from the online source. In this case the rss item is a headline that permits direct access to an article (typically through a web card). Channel card, **204**, will display a plurality of rss items one at a time through the channel card, thus the content in a channel card periodically changes, until al content items have been displayed. At that time the channel cards starts again from the beginning displaying each one of the plurality of source items.

Removing Cards

According to one embodiment, the home view may be configured by a user. A user may remove visual representations from the home view. In a card example, a user may access card option by providing focus on the card. As discussed above, card options are revealed in response to focus. Options may comprise a delete option. In one example, a delete option is display as an "X" in the upper right corner of a hover view of a card. To delete a card from the home view, a user executes the delete option by clicking on the "X." In response to removal of a card from the home the view, the remaining cards on the home view are reordered by the device. In one example, the reordering comprises shifting of the displayed cards to rearrange them into the organizational schemes discussed above. In order to ensure a close/delete selection was intended and to provide the user with the ability to change their mind, an information display bubble may be generated in response to the delete execution. The information display bubble maps to functionality that causes the device to undo the delete operation in response to selection by the user.

According to one embodiment, a dialog bubble is displayed off of the header of the home view. The dialogue bubble displays a message confirming the delete operation and further comprising a mapping to functionality provided, the causes the device to undo the delete operation in response to selection. According to another embodiment, hot-key functionality is provided that cause the device to undo that last activity performed by the device. In one example, ctrl-z, is mapped to functionality that permits the last activity to be undone.

Home View Navigation

According to one embodiment, the home view in configured to display a maximum number of visual representations. For embodiments employing cards that map to computer content and/or operations the maximal number of visual representations will restrict the number of cards displayed per page of the home view. In one example the display number is set to twelve. In response to exceed the display number, the device executes operations designed to render a new page for the excess. In response to multiple pages, the device is configured to display indications of content (e.g. cards) on adjacent pages. In response to movement of a pointer, visual representation displayed on the screen tracking computer focus, new pages may be displayed. In one example, multiple pages are provided by the view. The display rendered by the device give a user the impression that adjacent pages appear above and below the current page view. For example, indications of adjacent card content appear at the top and bottom of the home view body. By scrolling the pointer towards the bottom of the screen the user causes the device to display the next page of the home view, further by scrolling the pointer towards the top of the screen the user causes the device to display the previous page of the home view. Additionally, according to one embodiment, arrow keys provided on the device's keyboard may be used to navigate pages of the home view. In one alternative, keyboard shortcuts mapped to navigation functionality. In one example, keys with mapped navigation functionality include shift-arrow, crtl-arrow, alt-arrow to provide further navigation options.

One may navigate away from the home view at any time by selecting a visual representation and causing the device to execute the mapping associated with the representation. In one embodiment, a user selects a card and in response the device renders a page view appropriate for the selected card (e.g. web page view for a web card). In one embodiment, an integrated scroll wheel provides navigation functionality from the home view. Scroll wheel functionality may be dependent on state of the device, and may also be dependent on configuration of the device. In one example, the device's present state is its home view and manipulation of the scroll wheel causes the device to display the channel card view. According to one embodiment, returning to the home view is streamlined for the user. This may be accomplished through navigation buttons on the keyboard, for example **168**, FIG. **17**. The navigation button operates as a toggle between present view and home view, returning a user to the home view when the present view is elsewhere, and returning the user to the previous view when the present view is the home view. A navigation element provided in visual representation of computer content may also provide the same functionality. For example, navigation button **250**, in home view **200**. In another example, a navigation button, **352**, FIG. **3**C is provided in a web page view.

Reorganization of visual elements in the home view may implicate navigation with the home view. In one example where the home view presents cards to a user through multiple pages, moving cards across the pages requires navigation within the home view. According to one embodiment, specialized navigation options are provide to render sufficient context for the relocation across pages. In one example, a user drags a card across pages within a home view. The device in response to the drag across pages modifies the display of the home view to show a zoomed out display of the home view. The zoomed out display is permitted to violate any associated threshold with respect to number of displayed items on a page of the home view. The zoomed out display in a view of multiple pages with each element of the pages being reduced in size to allow them to be displayed in one screen. For long lists of cards, or other visual representations, this may result in extremely small visual representations or cards. It is realized that even thought the result may be visual representations so small that they cannot be fully appreciated, the user goal is to relocate a card, and the temporary loss of interactivity to the user will not impact the user operation. Once a card is relocated, the device caused the display to "zoom" back out to conform to management and organization scheme discussed, including maximal display thresholds, for example.

Navigation away from the home view may also occur through selection of the visual representations that map to computer content and/or functionality. In one embodiment, clicking on a card will zoom into that card, revealing the page view for that card. In one example, clicking on a web card caused the device to display the web page view for that card's content. In another, clicking on a channel card may invoke different behavior. In a channel card example, the navigation behavior depends on the location within the card that is clicked.

Some channel card embodiments, display items from rss feeds one at a time, scrolling through the rss items based on a timer, and in one embodiment, based on selection of navigation tools within the card. If a user clicks on the body of the channel card for example, the device causes the channel page view to be displayed for that card. If a user clicks on an rss item displayed in the channel card, the device causes a web page view for the specific content to be displayed. In one embodiment, a channel card maps to a content feed from the NEW YORK TIMES. Clicking on an article title in the channel cards causes the system to execute a mapping to the content by opening a new web card and zooming into the new card's web page view of the selected article. Clicking elsewhere the channel card causes the system will zoom in to the channel page view for that card.

According to one embodiment, searching from the home view causes the user interface to navigate away from the home view. For example, entering search terms into search box **254**, FIG. **2**, cause the device to execute a process for generating a new web card and navigating to the page view of the newly created web card. The device in creating the new web card automatically creates a mapping to web content based on default settings. In one example, the default settings provide for searching to occur through the well known search tool GOOGLE. Other search tools may be established as the default. By accessing a system card for settings, in one example, displayed as a Settings card, a user may change the default for the search tool. Further default operations are provided by the user interface. While in the home view, any typing that occurs on the keyboard (except for hot keys and keyboard shortcuts) will be default populate the search box of the home view. Pressing return or clinking on the search tool **255**, will execute the process for a new card and pass the search terms to the default search tools, and the device displays the web page view of the default search tool and its response to the search terms.

Example Page Views

According to one aspect a streamlined user interface is provided, that permits a user to access electronic content on a device responsive to context and responsive to device configuration. According to one embodiment, an element of a graphical user interface that provides streamlined access includes a plurality of views of computer content. Another element of the GUI, includes visual representations of computer functionality and/or content that are associated with a mapping to at least one of the plurality of views. In one example, the visual representations comprise cards, as discussed above. The various types of cards can each be associated with one of the plurality of views, and may also be associated with multiple views. A high level view may be provided to manage and organize the (for example in a home view). The card may be associated with a lower level view which permits more direct interaction with the viewed content. In one example, a web page view permits a user to interact with displayed web content for a web page. Other views including a channel page view, provide lower level views that permit interaction with content specific to channel cards, and system page views provide, for example, a lower level view of system functions mapped to by the system cards. System cards may be further classified into nascent cards, and different page view provided according to classification.

According to one aspect, methods and systems for streamlining user interaction with computer content and operations may include a process for providing consistent feature accessibility across a plurality of views and a plurality of visual representations of computer content. FIG. **45** illustrates one example process, **4500**, for providing consistent accessibility to computer content across a plurality of views and a plurality of visual representations of computer content and/or operations. At **4502**, a view of computer content is provided. The view is configured to include visual elements responsive to computer focus, however achieved. The view of computer content includes a header display further comprising a focus header display and an unfocused header display. In response to focus, the focus header display reveals additional controls associated with the computer content, **4504**. At **4506**, focus is removed from the focus header display and the computer system transitions the view of content to an unfocused header display, concealing the additional controls at **4506**. In one embodiment, responsiveness to focus provides for user consistency in accessing a plurality of views and with respect to visual representations of computer content, and at **4508** a plurality of representations and views provide additional focus responsive displays, which are configured to include focused and unfocused presentations.

According to another aspect, methods and systems for streamlining user interaction with computer content and operations may include a process for providing consistent feature accessibility by providing a primary means for navigation to computer content and computer operations to occur through a consistent view. FIG. **46**, shows an example process, **4600**, for providing consistent navigation operations to a user. At **4602**, a home view is presented to a computer user. The home view presents an organization of a plurality of visual representations of computer content, **4604**. The visual representations form the building blocks of the home view. Each visual representation is mapped to computer content and/or operations that a user may select by, for example, hovering on the visual representation, by clicking on it, and by using hot keys—among other options. At **4606**, a user executes the mapping to the computer content and/or operations. In one example, execution of the mapping causes the computer to navigate to a first view of the content. In some embodiments, process **4600**, comprises further computer logic executed by a processor to access a stored mapping, and to generate the rendered presentation on the computer display of the first view.

Typically the first view comprises a navigational elements displayed in a portion of the first view. The navigational element is mapped to the home view. In one example, the home view also comprises a navigational element, and a user may toggle between the first view and the home view by executing the navigational element. In process **4600**, a user executes the navigational element to return to the home view at **4608**. In one alternative, a button, a sequence of keyboard keys, a hot key may also cause a computer system to execute a transition to a home view. In another alternative, the same button, sequence, of keyboard keys, and hot key may cause the computer to return to the first view upon a subsequent execution. Returning to the home view at **4608**, presents the user with a consistent view of content options, and the user may select a new first visual representation mapped to other computer content at **4610**. Execution of the new first visual representation caused the computer to navigate to a first view of the mapped computer content, returning process **4600**, to step **4606**. Again the user may select a navigational element to return the home view at **4608** to select yet another first visual representation. In some embodiments, process **4600**, represents a resident process that runs in the background throughout operation of a computer device. In other examples, process **4600** may be exited by powering down the computer system (not shown). And in one alternative, a

user may exit process **4600** by selecting different navigational tools that execute mappings to other views. In another alternative, (not shown) a view selector may be invoked by changing a configuration of a streamlined device. Invoking the view selector can cause the computer system to execute a transition to a different view without a return the home view. In one example, invocation of the view selector by changing the device configuration from laptop to easel, causes the computer system to transition from a home view to a channel view.

Example Web Page View

According to one embodiment, a web page view is the computer implemented expression of a selected web card. The web page view is configured to present a consistent view of web based content to a user. The web page view comprise a number of elements that are maintained across the web page view of different content, although in some examples additional features may be provided to address unique aspects of the content being viewed. In one embodiment, the web page view includes a header, **354**, FIG. **3**C, a body, **356**, optionally a scroll bar **358**, and a navigation element, **352**. It is to be appreciated that individual web page views may comprise additional elements, and should not be read as limited to elements discussed with respect to this example. The Header **354**, is responsive to focus of the device. In another embodiment, the header is responsive to the type of content being displayed. In one example, the header is further responsive to the communication protocol user to access the web based content. The header portion may also be responsive to the state of the device, and state of the computer operation being performed (e.g. loading content).

Accordingly, in one embodiment the header **354** element of the display appears differently based on focus, content, and context of the web site being viewed. When the header is out of focus, for example, the header may be rendered in an out of focus display, shown by example in FIG. **18**A. The header display comprises navigation element, **1802**, page title **1804**, optionally a visual element associated with the web page is displayed **1806**, the visual element may be a favicon (reduced scale image associated with a website), and where appropriate the header displays a lock symbol **1808** to indicate a secure site. For secure sites, hovering over the security symbol **1808**, caused the device to display additional information regarding the security of the site. In one example, a dialogue box appears including information on the security signature for the site.

Page title provides the user the name of the page s/he is on in human-readable form. In some embodiments, when the header is out of focus, the title of the page extends to the right as far as possible. How far the title is display is dependent on what other elements are included in the header. For example, when the header is out of focus the title has the most room in the display. Upon focus, the device causes the header display to change. In one example, FIG. **18**B illustrates a header, **1850**, in focus, and device now displays additional tools in the header. Additional tools may comprise a share tool, **1852** (for sharing the web card mapping to the view), bookmark tool, **1854** (adds web page to bookmark list), more tool, **1856** (permits revelation of additional tools), search tool, **1858**, and close tool, **1860**. Additional tools may be displayed in the header on focus, including, for example, back and forward buttons, **1864** that may be used to access other pages in browsing history. Additionally, the title display from unfocused view, **1804**, FIG. **18**A, may be transformed into a web address box **1862**, FIG. **18**B. In one embodiment, focus on the header display **1850**, causes the device to transform the title display into an address box, **1862**. The address box maintains the title of the web site, until a user interacts with the address box, by for example typing into it. Once the system detects interaction with the address box, the display in the address box will indicate a url and/or uri for the current site (or whatever the user is typing). Other options may be made available through the header by display and selection of a more tool, **1856**. For example, the device displays a toolbar, **1904**, in response to user selection of the more tool **1902**, FIG. **19**. The toolbar supports operations, **1906**, provided by conventional browser of other known systems. The toolbar **1904** may also be revealed in response to keyboard short-cuts, for example, crtl-f opens a search box, **1908**, permitting the user to specify terms to find within the web page view. The toolbar display may be responsive to the content appearing in the web page view. For example, the device will display zoom tools instead of –text size and +text size in response to .pdf content.

Other standard operations and options may be supported in the toolbar. In one embodiment, the toolbar supports, find in page, find in page Next/Prev, for scrolling through hits within the page, save photos, –text size/+text size, to increase or decrease the size of the text (text sizing may be implemented globally so that changes in text size for one web page view will affect all web page views—alternatively the setting may be local to the present web page view), refresh, cut, paste copy, and print. Print and save behavior for a streamlined device does depart from conventional operation.

According to one embodiment, the header may also display additional tools whether the header is in focus or out of focus, responsive to the content of the page. In one embodiment, the header, **1890**-**1891**, FIG. **18**C, displays an add a channel tool, **1892**, regardless of focus (**1890** out of focus, **1891** in focus). In one example, the device determines that the accessed content has either a rss feed, or a custom view for the static web-page, and in response reveals the add a channel feature in the header. Selecting the add a channel causes the device to execute a process for generating a new channel card as discussed further herein.

According to another embodiment, the state of the content in the view may impact the tools displayed. For example, when a user is interacting with the address box (e.g. to enter a URL or URI) or when a page is not fully loaded, possible actions are limited. The device causes the header display to adjust to remove options that are unavailable (e.g. namely Share, Add channel, Bookmarks, and More), and adds the following elements Go/Stop tool **1895**, FIG. **18**D, and a status indicator **1896**. Selecting Go causes the device to initiate navigation and start loading a URL or URI listed in the address box. The stop button appears while a page is loading—clicking the button will stop the page from loading. The Go/Stop tool toggles between a presentation of Go when a page ahs not yet been loaded and Stop when a content is being accessed, for example. The status indicator may include a customized visualization. The customized visualization may be configured to tie various functions and features together. In one example, the status indicator is configured to display as a "loading spring," **1896**. **1896**, is animated to show that the device is actively downloading content. It is to be appreciated that although the Go/Stop tool is display in the same space on the header in the described example, the display for either function may also be rendered separately, or display above and below, among other options.

The header display may be further responsive to focus and selection. In FIG. **18**E, shown is a header after selection of

the search tool **1858**. In response to selection of the search tool, the device alters the heading display to include an search box **1898**, for entry of search terms. Once the search is initiated the device alters the header to eliminate search box **1898**.

Navigation within Web Page View

According to one aspect, navigating web pages within the web page view is similar to existing browsers on other systems. For most links, when a user clicks the link, the device executes a process to load a new web page into the body of the current web page view, replacing the contents of the current page. The device operates different in response to links that request a new window. For new window links or new tab links the device executes a process to generate a new web card, and further the new card is mapped to the link destination. The device executes functionality that causes the display to "zoom" into the new card and present the content from the link destination.

According to one aspect, transitions between active web page views occurs through the home view. The user selects a navigation element (e.g. **352** FIG. **3**C) to return to the home view, alternatively, a navigation button (e.g. **168**, FIG. **17**) will return the user to the home view. In another embodiment, hot keys and/or shortcut keys may be employed to cause the system to return to a home view. In response to selection of the shortcut and/or hot keys, the device executes a transition to the home view. From the home view a user may select any other card or generate new cards, as discussed above.

Creation of channel cards occurs differently from a web page view, than when done in a home view. In one embodiment, in response to selection of add channel in a web page view, the system returns to the home view, displays the creation of the new card, and presents the creation of the new card so that both the new card and the web card from which add channel was selected is displayed. In this example process any maximal display threshold may be ignored in order to display both the originating card and the new channel card. Once the card generation is complete the system zooms back into the original web page view for continued browsing. Alternatively, a system may enter a channel view of the newly created channel creation. In one embodiment, the behavior of the system may be altered according to settings accessed through a system card, and in one example a settings card.

Channel Page View

According to one embodiment, the channel page view is the zoomed-in computer implemented expression of a channel card. A channel page view presents a unique view into content made available through a website. The channel page view employs visualizations similar to corresponding visualization on channel cards but the large format of the view allows for a better display of content, and provides for increased interaction with users. The channel page view also comprises a mapping from the display content to the source from which the content is derived. Typically, content displayed in the channel page view is derived from an rss feed associated with a web-site. Additionally, some non-rss sites have customized visualizations that can be accessed through a channel page view.

According to one embodiment, the channel page view configured to present a consistent framework for user interaction with rss style content. The channel page view comprises a number of elements that are maintained across the channel page views of different content, although in some examples additional features may be provided to address unique aspects of the content being viewed. An example channel page view is illustrated in FIG. **20**A, **2000**. The channel page view shown includes a header **2002**, which includes a display for the title of the channel page view, **2006**, a share tool, **2006**, web link **2008**, and status indicator **2010**. The header may also include navigation element **2012** for returning to a home view among other functionality. The channel page view also includes a body **2014**, for displaying available rss items **2016-2022**. Selection of the displayed rss items **2016-2022**, caused the system to display the web page view of the selected article, web link **2008**, shown as "go to web page" in FIG. **20**, creates a new web card for the page from which the channel was created.

Other channel page views may also be employed. FIG. **20**B, illustrates another example of a channel page view, **2050**. Shown in **2050** is a specialized channel view for a news channel. Example view **2050** is separated into two scrollable columns, providing a headline column **2052**, for displaying individual rss items and a content column. Content column, **2054**, presents the details of rss items (if the content does not require additional space other than the displayed screen a scroll bard will not be displayed). The content column shows the headline, **2056**, includes the time the item was posted **2058** (in one example relative to current time), the author, **2060**, and the item's description, **2061**, in its entirety. According to one embodiment, images and/or script (html, xml, etc.) may also be displayed in the content column (not shown). The content column may also comprise a navigation element, **2062**. In one example the navigation element is labeled "full story." The system launches the item's url as a new web card, and transitions to a web page view of that url in response to selection of **2062**. Optionally, focus and/or hovering over the full story button causes the system to generate a preview view of the new card that would be created in response to selection of full story.

Selection of one of the content items, e.g. **2070-2076**, causes the system to display the headline, author, posting time, and full description for the selected rss item. Scroll bar, **2080**, is displayed if the number of items in the headline column, **2052**, require additional pages of display. A scroll bar may be display in the content column as well, if the content display requires additional pages. According to one embodiment, channel page views are configured to retain current state. The system accesses retained state when revisiting a channel view. According to one embodiment, a process for accessing a channel page view determines if any state information is retained for the channel page view. In response to a determination that state information exists, the system presents the last accessed content item in the content column. If the last content item is no longer available, the system selects the first content item by default.

An alternative view of channel content comprises a full screen view of rss items. In one example a channel full view comprises a headline display center in the screen. According to another embodiment, preview text is displayed in conjunction with the rss item. In one example, the channel full view includes displays configured to identify the source of the rss feed. In another example, a logo for the source feed is captured and displayed as part of the channel full view. In response to selection within the channel full view, the system displays a content menu permitting selection of any of the rss items for the content source. In one embodiment, the content menu appears as a list of rss items displayed at the lower portion of the channel full view. The content menu is configured to be responsive to manipulation of the embedded scroll wheel. Manipulation of the scroll wheel progress through the displayed content menu, and in response the system displays the selected content in the full view with

preview text appearing below. Shown in FIG. **21** is an example of a channel full view **2100**, with content menu **2102** activated by selection. Manipulation of the scroll wheel causes the system to scroll through the items in the content menu. In one embodiment, the content menu transitions between selections by rendering the apparent movement of the entire content menu either to the left of the right depending upon the orientation of the manipulation of the scroll wheel. Alternatively, the content menu is also responsive to arrow keys on the keyboard. Depressing an arrow key cause the system to display the apparent movement of the content menu to the next item.

According to some embodiments, the various channel views, for example, page and full view may also include animations of transitions between available rss feed items. Default operation of the streamlined computer system and streamlined user interfaces cause the system to display transitions from one rss item to the next in association with a time period. Transitions may include animations that cause the system to display new rss items sliding into position as the previous rss item slides out of view. In one example, an rss headline item slides out of view in response to the next headline item sliding into view. The device and user interfaces may also be responsive to manipulation of the scroll wheel. For example, manipulation of the scroll may by default invoke a transition to a channel card view.

System Page View

According to one embodiment, the system page view is the zoomed-in computer implemented expression of a system card. The system cards provide a user with the ability to interact with the device's settings and other computer operations. System cards also enable a user to access customized functionality, for example, photo and video interactions. According to one aspect, certain interactions with computer content are identified as special. The identification of special interactions is reflected in render those operations as system cards. System cards have the property, that they cannot be removed by a user. This insures that identified functionality remains available regarding of user intention. Additionally, the number of system cards can be limited, providing a distinctive interface element for system operation and important interactions even within the streamlined GUI. In one embodiment, system cards are limited to a photo and video card (controlling photo and video operations), a settings card (permitting access to device settings), a bookmark card (discussed herein), a camera card (permitting set and interaction with a camera), and a browse the web card (discussed herein). Although it is to be appreciated that other system card may be implemented and the invention is not limited to the system cards provide as example above.

The anatomy of the system card is similar to the anatomy of other cards. For example, an embodiment of the system card includes a header, **2202**, FIG. **22**, a navigation element, **2204**, a title **2206**, and a body **2208**. As discussed herein, nascent cards may be categorized as a type of system card. Alternatively, nascent cards may comprise their own category. While nascent cards share a similar format as the other cards, nascent cards do not have a page view. Nascent cards map directly to system functionality, that is executed upon selection or as part of a call from another process.

Channel Card View

According to one aspect, a channel card view is provided to display high level navigation options to a user, to enable streamlines selection of content and operations by making selections within a streamlines view. Similar to the home view the channel card view is configured to render a consistent organization of navigational elements of a streamlined graphical user interface. Unlike the home view, the channel card view is not based on pages of display, rather the channel card view is organized to display only one type of content, that is content that may be rendered in a channel (i.e. having an rss feed or customized visualization, and for special system cards). The channel card view is available in both laptop and easel modes of the streamlined device. In response to configuration of the device into easel mode, the channel card view is rendered by default. The content displayed in the channel card view is dependent on the channel cards displayed in the home view. Alternatively the channel card view may be invoked by operating the scroll wheel embedded in the device.

In response to operation of the scroll wheel, the system displays the channel card view, FIG. **23**, illustrates an example of a channel card view, **2300**. According to one embodiment, the channel card view comprises selector display **2302**. In another embodiment, the channel card view includes a selector display, **2302**. The selector view is invoke upon the first click of the scroll wheel while in easel mode, in laptop mode, additional clicks may be required to invoke the channel card view and selector. In one example, the three clicks are necessary to invoke the channel card view while the device is in a laptop mode. In another example two clicks are required. Upon invocation the channel card view comprises a visualization of the channel cards available for selection. In one example, the visualization resembles and behaves like a rolodex. As the user moves the scroll wheel individual channels **2304-2310** appear to flip around the hinge of the device. In response to selection, the foremost channel card displayed is selected and displayed full screen. In one example, selection includes activation of button **168**, FIG. **17**, from the easel mode of the device, although in laptop mode selection can occur in a number of ways including by operation of button **168**. In another example, a different button may be selected or short cut keys selection, among other options.

In response to selection from the channel selector view, the system displays a channel page view. On example of a channel page view for photo content is shown in FIG. **24**. According to one embodiment, the channel page view of the photo content automatically scans though each photo by default in the channel page view. The photo display restarts again at the begin when the end of the photo content is reached. In another embodiment, the default operation is to display only the selected content item (e.g. photo). FIG. **25**A, illustrates an example logical diagram of the behavior for the channel view. From channel page view **2502**, selection of the menu button (e.g. FIG. **4**, **166**), caused the device to display the content menu, **2504**, over the present channel page view. Selection of the menu button from the content menu, causes the device to display the selected content item in a channel page view **2502**. From channel page view **2502**, operation of the scroll wheel (e.g. FIG. **4**, **132**), causes the device to display channel selector view **2506**.

According to one embodiment, photo content displayed as a channel in the user interface, can be accessed similarly. Shown is an example of channel functionality, in logical diagram **2550**, FIG. **25**B. From channel page view **2552**, of the photo channel, selection of the menu button (e.g. FIG. **4**, **166**), causes the device to display the content menu, **2554**, over the present channel page view. Selection of the menu button from the content menu, causes the device to display the selected content item in a channel page view **2552**. From channel page view **2552**, operation of the scroll wheel (e.g. FIG. **4**, **132**), causes the device to display channel selector view **2556**.

According to one embodiment, channels for displaying video content and/or audio content operate with a different logical flow. In one example, additional interactivity is required to allow a user to, for example, stop a video, start a video from the middle, among other options. According to one embodiment, the streamlined device must be able to accommodate routine operations through manipulation of only a scroll wheel and a mouse, for example when the device is in an easel mode. It is to be appreciated that in other configurations the logical flow for the behavior of the channel view may be different, and may take advantage of addition input/output devices available in other device modes. Shown in FIG. **28**, is an example of a logical flow for device/UI functionality, during the normal operation of a channel view of video content. At **2802** shown is a channel page view of video content, select of button (e.g. FIG. **4**, **132**), causes the device to display contextual menu **2804**. Contextual menu, includes a visual representation of selectable options, **2806**. The selectable options rendered include at least a rewind/fast forward selector, resume selection, other episodes. Selection of rewind/fast forward selector invokes a timeline controller **2809** shown in the content page view, **2808**. The time line controller is responsive to rotation of the scroll wheel, providing fast forward in one direction and rewind in the other. From **2808**, selection of button **132** causes the device to return the view to channel page view **2802**. Selection of resume form **2804**, also causes the device to return the view to channel page view **2802**. Selection of other episodes from **2804** causes the device to invoke content menu **2810**, which provides a selector view of available content for the channel. Selection of content, **2811**, from the selector view causes the system to play the selected content in channel page view **2802**. From channel page view **2802**, the devices displays channel selector **2812**, in response to operation of the scroll wheel. The logical flow illustrated may be used for interactions with audio content as well, for example, to control playing of .mp3 or other audio file.

Selecting Device Configurations

According to one aspect, systems and method for streamlining user interaction with electronic content include a plurality of physical configurations for a streamlined device, the streamlined device may be, for example, a portable computer. As discussed above the plurality of configurations may represent modes of operation of the device, and include for example laptop mode, easel mode, among others. According to another aspect the user interface that governs interactions between the user the device and accessed content is responsive the selected mode and/or configuration of the streamlined device.

According to one embodiment, the streamlined device retains information on device configuration and/or mode. In on example, information is maintained as a state variable in a systems register. In another example, the system may obtain state from signals provide by an embedded sensor, as discussed above. The state information may be used to generate a system response, when the device detects a change in configuration and/or mode.

In a typical setting a user interacts with a streamlined device in one of two viewing modes. The two viewing modes reflect a level of interactivity with the device being viewed. A lean forward view encompasses interactions between a user and conventional computer systems. One example includes a user typing at the keyboard of their laptop computer, in essence, the user leans into the computer device and display to perform interactions and view content. Similarly a user's interaction with desktop computers are conducted through a forward mode of interaction. It is realized that traditional computer devices and systems are notorious bad at permitting interaction with content and the device from greater distances.

Interactions with content and other device for example a television are included in the second type of viewing mode. A lean back mode of viewing is meant to encompass ordinary television viewing, and the interactions a viewer has with their DVR for example. Television and their associated devices and configured to provide for lean back styled interactions. It is realized that conventional system and methods fail to provide for the transition from lean forward to lean back interactions. As discussed above, streamlined devices can accommodate a plurality of configurations, and individual configurations may be designed to accommodate the different viewing modes. Additionally, the streamlines user interface is configured to be responsive to the configurations. For example, transitions from a laptop mode of the device may trigger changes in the user interface. According to one embodiment, a transition from laptop mode to easel mode, causes the device to transition from either a home view or web page view to a channel selector view. The transition from laptop to easel, may also trigger a transition from a channel page view to channel selector view. In one alternative, the transition causes the device to display a channel full view for that channel card. The transition from easel to laptop may also cause the device to alter the view displayed to a user. In one example, if a new card has been shared, the device causes the home view to be displayed. The last page of the home view is displayed where the new card is rendered.

According to another embodiment, methods and systems for streamlining user interactions may include a process for transitioning between different user viewing positions. Shown in FIG. **48**, is an example process **4800**, for permitting a user to select a viewing mode for a streamlined device, and in response displaying a user interface view configured for the selected viewing mode. At **4802**, a streamline computer system presents computer content using visual representation optimized for different viewing modes. In particular, ones of the visual representations are configured to display in a "lean forward" user viewing mode and a "lean backward" viewing mode. In one example, a lean forward user viewing mode includes a user typing at a keyboard of a laptop computer. In another example, a lean backward user viewing mode includes a user viewing a television from a distance. One should appreciate that the examples provided are illustrative and are not intended to be limiting. A streamlined device permits a user to select a device configuration most suited to a particular user viewing mode. For example, a user may rotate a streamlined device's display relative to its based about an longitudinal axis, transitioning the device from a laptop mode to an easel mode. According to one embodiment, the easel mode of the device permits improved "lean back" interactions with computer content. In other words, the easel mode makes it easier to view the streamlined device's display from distances greater than conventionally used with laptop computers. Selection of a lean backward user viewing mode at **4804**, triggers the streamlined device to transition to a content display that improves user interaction. On one example, in response to the user selection at **4804**, the computer system display transitions to a channel viewing mode at **4806**. The channel viewing mode is configured to present computer content, in large footprint displays, and further is designed to streamline user interaction with the streamlined device by permitting access through a first I/O profile associated with the stream-

lined device in easel mode. The first I/O profile in easel mode may consist of a scroll wheel and a selector button. In some embodiments, the first I/O profile may include a volume control.

Other processes may be invoked to cause a user interface to transition between views in response to changes in device configuration. Shown in FIG. **49**A, is an example process **4900**, for transitioning between a lean forward view to a lean backward view. At **4902**, a user changes the streamlined device configuration from laptop to easel mode. In response the computer system switches view from its current view to a channel view. In some examples, the computer system is already in a channel view, and no transition is implemented. The easel mode of the streamlined device is associated with a first I/O profile including an integrated scroll wheel and a selector button. Upon manipulation of the scroll wheel, a view selector causes the computer system to display a progression through a sequence of channel cards as the scroll wheel is rotated, at **4906**. Optionally the sequence may include other customized cards (in one example a photo and video card). Upon selection of a displayed channel card, a channel full view is invoked at **4908**. The channel full view displays the content of the selected channel card in the entirety of the computer system display screen. The system returns to the channel view in response to further rotation of the scroll wheel.

Shown in FIG. **49**B, is another example process, **4950**, for transitioning between user views. At **4952**, a user changes a device configuration from an easel mode to a laptop mode. In response to the change in mode, the device displays a home view of available content, at **4954**. In some examples, the system may already be in a home view and no transition occurs. The user may interact with the streamlined device through a second I/O profile at **4956**. In some embodiments, the second I/O profile includes a keyboard, a touch pad, buttons, web cam, and a scroll wheel.

Streamlined Device Community

According to one aspect, a common experience may be created for multiple users, fostering a community experience. According to another aspect, the common experience may also include a community aspect. The community aspect includes sharing of content between users, sharing of content and configurations, sharing of content, configurations, and customizations, among many other options. In particular, sharing may involve the transmission of user interface elements to other users. The visual representations that map to content and/or computer operations on one device may be transmitted to another device or another user. In one example, a user may share a card and any of its configurations with another user. Access to the shared user interface elements, in some embodiments, facilitates communal computer usage. In one example, a first user may be watching media on their streamlined device, another user known to the first user, may receive a user interface element that retains information related to the accessed content and information related to the present context. That is for the first user watching a movie, the first user may share the user interface element (e.g. a channel card mapped to video content) through which s/he is accessing the move, and permit the another user not only to watch the movie, but to take up the movie at the same point in time, so in essence, they get to enjoy the movie together. Content and context retention by user interface elements that can be shared provides unique advantages to the users of the streamlined devices.

In some embodiments, the community aspect incorporates formation of groups. In one example, groups are formed based on at least one of a social relationship, familial relations, work relationship, etc. Different groups may share different content and even different context for the same content through for example, shared user interface elements. Groups may be further organized into nodes or a node may comprise the group. In some examples, a family forms a node regardless of the family's location relative to each other. As part of the configurations that may also occur as part of the device's purchase, at least one of the users identifies his/her family members. The family members are configured into a node. The node may be used to permit sharing of content. The node may be used to permit sharing of cards. Further updates to configurations on device in the node may be propagated automatically to other devices in the node.

Communication between groups members may take place over the internet. In one embodiment, a sub-network utilizes the internet or other communication network to communicate between streamlined device users. In another embodiment, a service is hosted for streamlined device users to facilitate communication. The service may also be connected to the internet and in one example functions as a gateway between users, their devices, content, sharing, and communicating. The service facilitates real time sharing, in one example a user may share a movie s/he is viewing with another. Not only may the user share the information that s/he is watching a movie, but the user may allow another to watch the movie starting at the same place, allowing the users to perceive they are watching the movie together.

FIG. **29**A, illustrates an example interaction between a user, the device, and the user interface, where the device causes a web card to be shared to other users. Shown is web page view, **2900**, in response to user selection of share **2902**, the device displays a share interface **2904**. The device accesses the user profile to determine any groups or nodes that the user has created. In example view, **2900**, the user has only one group, family members **2906**. Each entry listed in family members represents another streamlined device/user. Box **2908** permits sharing of the card with other users of conventional systems. Comment may be included. For example, a user may type any comment on the card being share into box **2910**. Comments entered on a shared card are display with the card on receipt by another streamlined device user. The user selects any one or more of the listed members **2914-2920**, or the user selects **2912** to share the card with all the listed members. Once the selections have been made and any comments entered the user selects **2924** Share! And the card is transmitted. By selecting Never Mind **2924**, the device closes the share interface. In FIG. **29**B, shown is an example of a web page view after a share operation has been completed. At **2950**, the device notifies the user that the selected item has been shared. For other streamlined device users share content is received by their streamlined device as a web card. For other users, an e-mail with a link to the content is delivered. It is to be appreciated that FIG. **29**A, illustrates a user with one group or node. In other embodiments, a user may be permitted to generate a plurality of groups or nodes. Box **2926** may first display a list of groups, that a user may select from, in order to show the members of the selected groups. In one embodiment, box **2926** lists more members that can be accommodated in the space provide by the interface. An optional scroll bar may be displayed into to permitting display of additional group members.

FIG. **30** illustrates an example of a received shared card, **3000**. The state of the streamlined device may impact behavior of the device in response to receipt of a shared card.

In screensaver mode, a streamlined device presents received shared cards as part of the screen saver view, **3000**. Comments included with the shared card, are presented in an overlay box **3002**, and any text that does not display is a first screen is scrolled into view **3004**, while the content of the shared card is displayed. The overlay box **3002**, may include an image of the user who shared the card and/or content, at **3006**. Shared display **3000**, may also include an indicator regarding the number of content items in the shared card. For example at **3008**, the number of content items in the photo set being displayed indicates 1 of 4. Other information associated with individual content items may also be displayed at **3010**. In the screen saver mode, the shared content items are each display, a timer controls the length of time each item is display before continuing on to the next item. The device then returns to any screen saver content that was being displayed when the shared card came in.

For users receiving shared content while in an active view (e.g. non-screensaver views), the system may provide a notification message to indicate shared content. From the home view, for example, the system generates notification message to display in a message bubble. An visual indicator is employed to notify the user that a system message is present. In one example, the navigation item displayed in the home view (e.g. FIG. **2**, **250**), is animated to indicate a message. An example notification is illustrated in FIG. **31**. Navigation element **3102** may be animated, the device displays message bubble **3104** upon focus resolving on element **3102**. The user may select **3106** or **3108**. Upon selection the device displays the shared card of **3106**, or the device returns to the home view **3108**.

Similar notifications may be employed in conjunction with other views. Further similar notifications may be used for other contexts. In response to displaying a web page view of a web page with stored user name information, a device may present a notification message regarding the availability of account information. FIG. **32** illustrates an example message for a site with two stored accounts. By default the system displays the content without using the stored account information. The device causes the message to disappear if a selection is not made, or if browsing activity continues without selection of an account. According to some embodiment, notifications can either require a response/action or the notification may disappear if no action is taken. Typically, notifications that do not require an action are used to convey information.

In one embodiment, from channel view in laptop mode, the notification of the arrival of new cards is the same as in home or page view. Typically navigation element **3302**, FIG. **33**, does not appear in the channel view. In response to a new card, the device displays **3302** and may animate its display. In response to focus on the **3302**, a notification bubble **3304** appears. The system displays the home view for the page containing the first new card in response to selection of **3302** or **3306**.

When a notification is available in channel view, moving the scroll wheel invokes the Channel Selector view, but the system displays the first new card default (instead of the current channel). When in channel view in easel mode, the notification of the arrival of new cards is similar as above, except that both the navigation element and the notification bubble may appear at once. Shown in FIG. **34**, is an example of a notification message from a channel view while in easel mode. The system displays both **3302** navigation element and **3404** message bubble together in response to shared content.

In one embodiment of a streamlined device, the user interface is configured to provide for passive viewing of selected content through a screensaver mode. The device enters screensaver mode in response to the expiration of a idle timer expiring. Any interaction with the device causes the device to exit screensaver mode. In screensaver mode, channel cards and content are display in order. An idle time out period may be established to force a transition to a new channel in the event the idle time out period is exceeded before all the content of the channel is displayed.

According to some embodiments, the community experience is enhanced through particular features and functions facilitated by the device, the user interface layer, and/or configurations designed to facilitate interaction among users (either with the device features themselves or also with third party services). According to another aspect, community experience and/or community learning furthers adoption and/or integration of new computer features into a particular user's routine. It is realized that facilitation of communication and/or content sharing across users improves introduction of features and increases the likelihood of their adoption. Context and content sharing are provided for and through streamlined interfaces. The sharing opportunities may be device sensitive, that is, a user with a same/similar device can be identified by a specific user. The users with identical devices may have the most options for how to share, what content to share, context settings, and may also include the ability to share features associated with the content. In one embodiment, a user may enable features associated with a card based interface and through sharing the card make another user aware of features of the card interface that the receiving user was unaware of. In another embodiment, the shared card provides all of the configurations established for the originating card. In one alternative, security features may be invoke to clear certain settings of a card to insure that for example, banking information is not shared to another user. In another alternative, the user selecting share is prompted to confirm the share request. In response to a security identifier, the prompt to confirm includes a warning banner regarding the identified security issue. In one example, a user receives a warning that sharing a card including banking content may compromise the bank accounts referenced. In another embodiment, a share request with an identified security issue is denied.

In some embodiments, the community aspect incorporates formation of groups. In one example, groups are formed based on social relationship, familial relations, work relationship, etc. Different groups may share different content and even different context for the same content through for example, shared user interface elements. Groups may be further organized into nodes or a node may comprise the group. In some examples, a family forms a node regardless of the family's location relative to each other. As part of the configurations that may also occur as part of the device's purchase, at least one of the users identifies his/her family members. The family members are configured into a node. The node may be used to permit sharing of content. The node may be used to permit sharing of cards. Further updates to configurations on device in the node may be propagated automatically to other devices in the node.

According to another embodiment, sharing options may also be adapted to different devices being operated by sharing users. For example, certain features may be disabled when a card or content is shared outside of a streamlined device community. In some embodiments, communities may be based on the device being employed, membership in a group, and/or membership in a node. Additionally com-

munities may be based on social interactions, familial relationships, etc. Examples of communities include name lists of user identified by the device operator. In one example, community lists and/or community groups are pre-generated in response to questions asked of a potential purchaser. User names may also be added and maintained by the user. Additionally, the system may create community lists on behalf of a user based on the user's activity.

For example, when composing and sending an e-mail, the system may query the user to determine if the recipient should be within the user's community. In one alternative, the system may add the recipient to a potential community and make the addition subject to a later confirmation. In another option, the e-mail recipient is added by default to a group with minimal sharing options. The user is provided the option of changing the group associated with the recipient. Additions to community list may require additional configurations to become effective. For example, the device user may be required to accept additions, a device user may be required to identify if the added name corresponds to another user of a similar/same type of device, among other configurations options.

Specialized Operations

According to another aspect, certain features of convention computer interactions have been specially configured to present streamlined interaction between a device, a user, and content. In one embodiment, the device does not incorporate mass storage (i.e. a hard drives), instead the system is configured to employ RAM and Flash memory storage. The capacity of the flash memory is significantly less than traditional mass storage options. Thus in some embodiments, traditional features such a download, have been configured to operate differently for a streamlined device.

In one example, download links do not cause a streamlined device to download content. Instead, a download link is interpreted by the device, which initiates a process for handling download links. An example process includes accessing a third party provider of remote storage to retain the content identified in the download link. According to one embodiment, the purchase of a streamlined device, include creation of an account with access to on-line storage. In one example, remote storage for a device is provided in conjunction with user information stored to customize the device and configure its operation to the particular user.

In one embodiment, customized configuration files supply information required for integration for known third party providers. In some embodiments, customized configuration files are used to establish default interactions with for example, Shutterfly, an on-line third party photo management and sharing service. In other examples, customized configuration files are used with other third party on-line service providers. Other third party provides include GMAIL, HOTMAIL, YAHOO! MAIL to provide examples of e-mail service providers. Other provides include, for example, on line banking providers, financial system providers, university systems, web site development providers, dating services, and social networking sites. One should appreciate that the integration of an on-line service need not depend on a predetermined configuration file or settings, rather, various embodiments of the systems and methods are adapted to learn from user interaction and develop appropriate configurations. Certain embodiments are further configured to take advantage of configurations developed by other users of such systems and methods, permitting sharing of content, sharing of configurations, etc. According to one aspect, by using input from the users, learning from user interactions, permitting content sharing, permitting sharing of configurations, and by providing default configurations for more popular services almost any on-line service can be integrated.

Still other embodiments, may query the user upon entry/access into a new service for any information necessary to configure the device to provide streamlined presentation and integration of the third party service. In some embodiments, the process of streamlining user interactions with electronic content includes querying the user regarding subscribed services and/or functions the user would like to use on their computer. For example, during processing of a purchase of a streamlined device a prospective purchaser receives a query form, or the user may receive individual questions regarding the purchaser's present computer use. In one example, the questions will generate a profile of subscribed services, whether pay or free, and customize the user interface to permit streamlined interaction with those services out of the box. In one example, default configurations and/or questions designed to elicit required configurations, allow the user to interact with GUI elements customized to his/her current use and preferences.

A process for handling download links may be responsive to the particular content selected for download. In one example, the system analyzes the selected download link to determine the type of content selected for downloading. In response, the system identifies accounts held by the user for processing the selected content. If multiple accounts exists that handle the selected content, the account first created is used by default. A user may alter default operation through use of system settings. For photo content, as one example, the system identifies the content as a picture (.jpg, .gif, .tif, etc.). The user's profile contains information for accessing FLICKR, a third party provider of photo access and management services. The download link is interpreted into an operation to transfer the file into the user's FLICKR gallery. Other services may be used to host the content, for example, the download link may be interpreted to cause the system to upload the photo to the well known MYSPACE or FACEBOOK services. For content that cannot be identified, the streamlined device causes the download request to be interpreted as a delivery request to a generic remote storage service. The remote storage service may be one provided through a third party provider, or may be the remote storage space provided by a seller of the streamlined device.

An example process, **4200**, is shown in FIG. **42** for streamlining user interactions with digital content. The user interaction with digital content is streamlined by enhancing features for simplifying user decisions by providing access information associated with multiple user accounts for a particular online source. Multiple account profiles can be retained and presented to a user of a streamlined device. Example process **4200** begins at step **4202**, permitting a user to access electronic content through the streamlined device. At **4204** the source of the electronic content is determined and matched against available access information. Access information may be stored in a device profile or in another example in a user profile. These profiles may be loaded at startup of the device or may be accessed in real time when a content source is determined. At **4204** (NO) no access information is available for the content source, and the electronic content is display at **4206**. Example electronic content includes web pages and other online resources. At **4204** (YES) the content source is matched against available access information. At **4208**, access information is displayed to a user in a user interface. The access information typically identifies a user account available to access the content source. In one example, for an e-mail service this will

include the e-mail address displayed in the interface. A plurality of access accounts may be available for a given service. The streamlined device is configured to handle multiple users with multiple account to any given services. The user interface permits the user to identify which access account is desired. At **4210** (NO) the user does not identify an access account, and at **4212** a default access account is used. The default access account does not provide any account information, and the content source page is display, at **4216**, not including any sign-on information. At **4210** (YES) a user selects an access account and at **4214** the access information is passed to the content source, and the displayed content at **4216** will return content after the sign-on process has been completed.

In another embodiment, a process for handling download operations is provided. The process includes causing the device to display a download interface, for example interface, **3500**, FIG. **35**. The interface presents the user with options for processing the download request. Box **3502**, lists members of the user's group to whom the user may send the file. Box **3504**, permits a user to enter e-mail addresses to send the file as an attachment or as a link if a size threshold is exceeded. For a user who has configured third party service capable of handling the file content, Box, **3506**, displays the configured providers (e.g. Shutterfly **3508**, Flickr **3510**, DropBox, **3512**). Each configured service displays with the account name configured for the service, for example at **3514**.

In one example, process, for interpreting download operations also includes displaying the interface in response to computer focus on the download link. In another example, hovering over the link causes the system to display a download interface. For files sent by e-mail the system may be configured with a maximal file size for particular e-mail services. Typically files sizes of less than 5 MB are not filtered, thus is the e-mail domain address is not recognized, a default threshold of 5 MB may be used. For services with known size constraints the system will transmit the file to the e-mail address. If the constraint is exceed, the system transmits a link to the file instead of the actual file.

Another to another embodiment, selection of print operations may be handled in a similar fashion as to downloads. When a printing device is attached to a streamlined device, printing proceed as known conventionally. When a printer is not attached, a process for interpreting print operations may be invoked. The process for interpreting print operations, includes causing the device to display a print interface **4102**, FIG. **41**A. The print interface provides box **4104** listing group members, **4106** listing configured services, and box **4108**, for entering destination e-mail addresses. Selection of **4110** sends the item in a print format, in this example a .pdf file. In other examples, different file formats will be displayed as part of **4110** (e.g. word, doc, txt, wpd, xls, etc.). in some embodiments, file size limitations will be employed on delivery of print format files. FIG. **41**B illustrates in greater detail examples of print **4150** and download interfaces **4152**. Print and download operations may invoke a progress bar displayed over the current view, with the option of canceling transmission.

In another embodiment, a streamlined system includes the following features:

- Employs remote mechanisms to access and/or deliver files
- Mechanisms include identifying a remote action in response to file type
- Web Content Support for system that does not utilize local memory for storage
- In response to download selection (i.e. request to locally store content) display message regarding new functionality (transfer or remote store)
- Maintain user profile—associate web service providers for a particular user
- web services—remote storage, email, photo sharing, custom web page info, storage accts (e.g. Drop Box and Google Docs)
- In response to mouse over/selection/hover/indication of selection display interface to enable remote delivery of content/file
- Providing for selection of remote delivery to a domain (including home network) including an act of verifying the content/file's size does not exceed a threshold value
- In response to passing site check deliver content/file as attachment
- In response to fail, store in provided remote storage, generate link, and deliver link to content/file

According to one embodiment, a method for streamlining user interaction with electronic content includes a process for interpreting online executable operations into streamlined operations. One example process, **3600**, FIG. **36**, for interpreting online executable operations into streamlined operations includes the step of permitting a user to access digital content online, at **3602**. The online digital content is presented to a user through a graphical user interface at **3604**. The GUI permits a user to select executable operations in the presentation of the online digital content, at **3606**. In response to selection of the executable operation, the computer system determines if the executable operation requires local access. In one example, the executable operation includes a download operation that would cause a conventional computer system to store a file on a local mass storage device such as a hard drive. In response to the determination that the executable operation requires local storage, a streamlined computer device transforms the executable operation's local access request into a remote access operation, at **3608**.

In one example, the remote access operation includes a storage request to a online service provider. Various online service providers permits remote storage of various computer files. Certain service providers optimize the provided service for specific file types, such photo management and sharing services. Other examples include e-mail access providers, video and audio media management and presentation services. In other examples, a service provider may offer generic data storage not specific to any file type. In one embodiment, step **3608** includes transforming a download request to a local mass storage device into a storage request to a remote service. The example process can include acts of identifying the file type associated with the download request, and selecting a service provider based on the identified file type.

In another example, the executable operation that requests local access to storage on the streamlined device may include a print operation, a save operation, a copy operation, a paste operation. Typically the streamlined device is configured to transform save, download, and print operations into remote storage operations. According to one embodiment, a print operation may be streamlined to permit the print operation without an attached printer. According to one embodiment, in the absence of an attached printer, a print request generates a print file in response to execution. Conventionally the print file would be stored locally on a computer hard drive. In some embodiments, a streamlined device does not employ local mass storage devices such as hard drives. Such streamlined devices are configured to

transform local storage request into remote storage operations. In one example the print file may be directed to a generic storage provider, and the file stored in the remote memory associated with the generic storage provider. In another embodiment, the system checks the resulting file size for the print file. If the size of the file exceeds a threshold, then the system may further streamline the operation. For example, by providing a link to the file and transmitting the link to a destination. A link may be transmitted through an e-mail instead of transmitting the file itself, for example.

Another example process may be used in conjunction with **3600**. In one example, a sub-process, **3700**, FIG. **37**, for permitting selection of executable operations in online content can be employed. At **3702**, computer focus is resolved on an executable operation embedded in online content. Executable operations can include download, print, save, transfer, retrieve, get, fget, and generally comprise operations that require a large memory block of nonvolatile storage, and in particular hard drive space. A streamlined computer device includes logic stored in memory and executed by a processor to analyze a focused executable operation, and at **3704**, the executable operation is analyzed. The logic may include programming to trap download request for example. Once a request is trapped the streamlined device can determine what action is appropriate based on the type of request. At **3706**, it is determined whether the executable operation requires local storage. At **3706** (No) local storage is not required and the executable operation is performed at **3708**. At **3706** (Yes) it is determined that local storage is required and the operation is transformed into a remote access operation at **3710**.

Example process **3600** may include additional sub-processes and/or individual steps performed in process **3600** may also comprise other processes. In one example sub-process **3800**, FIG. **38**, for transforming online executable operations associated with local storage into remote storage operations may be employed as part of a larger process, for example, process **3600**. At **3802**, a streamlined computer system identifies a result of an executable operation identified in a web browser displayed on the system. At **3804**, a file type associated with the operation is identified. At **3806**, at least one of a device profile and a user profile is accessed, to retrieve available services, **3808**, that may be appropriate for the particular file type. Various services for a particular user may be associated with the device itself, and a plurality of users may have access to multiple services or even more than one account for an individual service. Logic stored in memory and executed by a processor may determine matched services at **3810** by accessing information stored in at least one of a device profile and a user profile. The access information may contain records on available services, their access information, and the access information may include a file type designation for a particular service.

In one example, executed logic matches a file type associated with the executable operation to a file type associated with a remote service **3810** (YES), and in response the computer system retrieves access information for that remote service at **3812**, the local access operation can be redirected into a remote service operation at **3814**. For example, the computer system may access the remote service using the obtained access information, and provide an interface to transmit the object (data) of the local access to a location within the remote service. In one embodiment, a default service may be configured for any streamlined device. In the absence of matched services at **3810** (NO), the computer system may invoke a default remote service at **3816**, obtain the default service access information at **3812** and redirect the local access operation into a remote service operation at **3814**.

In another example, process **3800** may be coupled with an interface display presented to a user of the streamlined device. And step **3812** may be used to populate a user interface with a plurality of matched services. The interface may also display additional information associated with the service, for example an account name may be display to permit a user to distinguish between an account s/he set up as opposed to another user. The system may permit the user to designate the remote service appropriate for use in the interface and step **3814** occurs to redirect the local access operation into the user selected remote service.

In another embodiment, an example sub-process, **3900**, FIG. **39**, for obtaining service access information may be employed to retrieve remote service information. Example process **3900**, includes an act of accessing at least one of a device profile and user profile to obtain matched services at **3904**. Obtaining matched services may include filtering from the available services, or it may include retrieving all available services listed in the at least one of a device and user profile. In one example, filtering is performed based on a file type that is the subject of a local access operation, in another example, filtering may be performed to return only remote services of the current system user, although it is to be appreciated that other filtering operations may be performed. Once available services are matched **3904**, with or without filtering, the matched services are displayed to a system user at **3906** in a user interface. The user interface permits the user to select from the remote services at **3908**. Selection may include clicking on a visual indicator shown in a computer display (e.g. a check box), other options include links to the service, other visual indicators may be used, including drop down boxes and other html, xml, and human readable computer displayed forms. In one alternative (not shown), if the user does not select a service within a predetermined period of time, the system may cancel the operation entirely, or alternatively select a default remote service automatically. At **3910**, the object of the local access operation is delivered to the remote service.

Configuring Streamlined Devices

According to one aspect, streamlining user interaction with computer content includes improving user interfaces display, permitting configuration of streamlined device ruing operations. Streamlining user interaction may also include providing for the pre-configuration of a streamlined device with content customized to a particular user.

In one embodiment, a potential user may purchase a streamlined device on-line. During an order process, the user may establish an interactive session with an order management system. the order management system may be operatively connected to device management systems, including for example remote storage space, remote profiles, among other information. The order management system is configured to retrieve information on the potential user during a purchase session. The potential user is asked for permission to retrieve information from the computer system on which they are order from. The interactive session may also inquire if the user is ordering from home (and thus their home computer), or form another location. In response to granting permission, an executable object is downloaded to the potential user's home computer. The executable object may be encoded use any language, the specific coding language/environment is not important rather the operations performed by execution of the object on computer hardware is.

The executable object mines the home computer of the potential user for web usage information. Web usage information may include for example, browser history (IE and FireFox), favorites, stored accounts, bookmarks, access frequency information. The web usage information is retrieved from the home computer and processed either by the order management system or a streamlined device management system to generate visual representations associated with mappings to computer content. The content that is mapped to, is determined for example, be determined the most frequently accessed site for the potential user. In one embodiment, web cards are generated for the potential user. Each web card is pre-loaded on the device that will be shipped upon completion of the order. Further, for the web cards capable of being display as a channel card—both types may be pre-loaded. Other specialized cards may be generated and pre-loaded for the user based off of information obtained from their home computer. For example a bookmark card is generated from the retrieved bookmarks—The retrieved bookmarks may be passed through a filter to remove bookmarks that have not been accessed in for example 6 months. Although other time periods may be used to filter bookmark information. Web cards may also be created from the most frequently access bookmarks.

Additional information may be mined from the potential user's computer. In particular, communication settings for the home computer may be detected. Any wireless communication setting may be retrieved and preconfigured. After pre-configuration the streamlined device may be considered fully operations out-of-the-box.

The interactive session may also be used to supplement any retrieved data, for example, if the executable object detects frequent access to third party providers—Flickr and Google Docs for example but cannot detect account name and other access information, the interactive session may query the user to provide the required information.

In other embodiments, the user may be sent executable code via an e-mail during or after a purchase. For example, a user not on his/her own computer during the ordering process may be sent an e-mail containing an executable file, to be run when the user is on their home computer. In another example, a party may purchase a streamlined device for another. The purchaser may provide an e-mail address for the intended recipient, who may execute the file to transmit customization information for the streamlined device.

According to one embodiment an example process, **4000**, FIG. **40**, for pre-configuring a streamlined device is shown. Process **4000**, beings at **4002** in response to a request to purchase a streamlined device. The request is accepted at **4002**, and in response a management system requests permission to perform a data mining operation on a recipients computer. Typically the person/entity ordering the streamlined device is the same as the recipient, in which case an executable file can be transmitted at the same time a online request to purchase a streamlined device occurs. In one alternative, the request may be entered offline. During an offline request an e-mail address may be requested and the executable file deliver to the recipient's email, notifying him/her of the file and it use to pre-configure their computer. In another alternative, the party ordering the streamlined device intends it for another. When the purchaser and recipient are different, the e-mail address is requested for the intended recipient. At **4006** (YES), permission is obtained and the executable file retrieves information associated with online use of the recipient's computer at **4008**. Additional information may be collected including configuration options on the recipient's computer. System settings such as network communication configurations may also be retrieved. In one example, wireless network data is retrieve to permit the streamlined device to connect immediately to a recipient's home network.

During an order for a streamlined device, demographic information is collected on the recipient at **4010**. This often includes at a minimum a name and destination address for a recipient of a streamlined device. Thus even if permission is not granted **4006** (NO) information can be collected to pre-configured a streamlined device at **4010**, in this case the information is constrained to what is provider by the purchaser during the transaction. At **4012**, accumulated information is used to pre-configure the streamlined device. Pre-configuration includes establishing wireless network settings for the streamlined device, and may include generating visual representations of online content that are mapped to for example the most frequently accessed sites on the recipient's home computer. Other configuration can include generating visual representations that map to services configured on the recipient's computer (online banking, photo management services, file sharing services, media management services, e-mail providers, etc.). The visual representations may be configured with access information including user names and passwords so that a recipient can switch over the streamlined device seamlessly.

Special Purpose Computer

FIG. **51** shows a block diagram of a computer system **5100** in which various aspects of the present invention may be practiced. For example, various aspects of the invention may be implemented as specialized software executing in one or more computer systems including multiple computer systems communicating over network. Computer system **5100** may include a processor **5106** connected to one or more memory devices **5110**, for storing data. Typically computer system **5100** is implemented without hard drive devices. Memory **5110** is typically used for storing programs and data during operation of the computer system **5100**, and typically comprises Flash memory. Components of computer system **5100** may be coupled by an interconnection mechanism **5108**, which may include one or more busses (e.g., between components that are integrated within a same machine) and/or a network (e.g., between components that reside on separate discrete machines). The interconnection mechanism enables communications (e.g., data, instructions) to be exchanged between system components of system **5100**.

Computer system **5100** may also include one or more input **5104**/output (I/O) devices **5102**, for example, a keyboard, mouse, trackball, microphone, touch screen, a printing device, display screen, speaker, etc. Output devices may include video cards and separate video memory for improved processing performance. Storage **5112**, typically includes a computer readable and writeable nonvolatile recording medium in which signals are stored that define a program to be executed by the processor or information stored on or in the medium to be processed by the program. The medium may, for example, be a flash memory. Typically, in operation, the processor causes data to be read from the nonvolatile recording medium into another memory that allows for faster access to the information by the processor than does the medium. This memory is typically a volatile, random access memory such as a dynamic random access memory (DRAM) or static memory (SRAM).

Referring again to FIG. **51**, the memory may be located in storage **5112** as shown, or in memory system **5110**. The processor **5106** generally manipulates the data within the

memory **5110**, and then copies the data to the medium associated with storage **5112** after processing is completed. A variety of mechanisms are known for managing data movement between the medium and integrated circuit memory element and the invention is not limited thereto. The invention is not limited to a particular memory system or storage system.

The computer system may include specially-programmed, special-purpose hardware, for example, an application-specific integrated circuit (ASIC). Aspects of the invention may be implemented in software executing on hardware, hardware or firmware, or any combination thereof. Further, such methods, acts, systems, system elements and components thereof may be implemented as part of the computer system described above or as an independent component.

Although computer system **5100** is shown by way of example as one type of computer system upon which various aspects of the invention may be practiced, it should be appreciated that aspects of the invention are not limited to being implemented on the computer system as shown in FIG. **51**. Various aspects of the invention may be practiced on one or more computers having a different architectures or components that that shown in FIG. **51**.

Computer system **5100** may programmable using a high-level computer programming language. Computer system **5100** may be also implemented using specially programmed, special purpose hardware. In computer system **5100**, processor **5106** is typically a commercially available processor such as the well-known Pentium class processor available from the Intel Corporation. Many other processors are available, including multi-core processors. Such a processor usually executes an operating system which may be, for example, the Windows-based operating systems (e.g., Windows Vista, Windows NT, Windows 2000 (Windows ME), Windows XP operating systems) available from the Microsoft Corporation, MAC OS System X operating system available from Apple Computer, one or more of the Linux-based operating system distributions (e.g., the Enterprise Linux operating system available from Red Hat Inc.), the Solaris operating system available from Sun Microsystems, or UNIX operating systems available from various sources. Many other operating systems may be used, and the invention is not limited to any particular operating system.

The processor and operating system together define a computer platform for which application programs in high-level programming languages are written. It should be understood that the invention is not limited to a particular computer system platform, processor, operating system, or network. Also, it should be apparent to those skilled in the art that the present invention is not limited to a specific programming language or computer system. Further, it should be appreciated that other appropriate programming languages and other appropriate computer systems could also be used.

One or more portions of the computer system may be distributed across one or more computer systems coupled to a communications network. For example, various aspects of the invention may be distributed among one or more computer systems (e.g., servers) configured to provide a service to one or more client computers, or to perform an overall task as part of a distributed system. For example, various aspects of the invention may be performed on a client-server or multi-tier system that includes components distributed among one or more server systems that perform various functions according to various embodiments of the invention. In one embodiment, the Litl cloud is maintained on server systems accessible from a plurality of devices. These components may be executable, intermediate (e.g., IL) or interpreted (e.g., Java) code which communicate over a communication network (e.g., the Internet) using a communication protocol (e.g., TCP/IP).

It should be appreciated that the invention is not limited to executing on any particular system or group of systems. Also, it should be appreciated that the invention is not limited to any particular distributed architecture, network, or communication protocol.

Physical Configurations

Referring to FIG. **52**C, when the portable computer **100** is in the easel mode, the base is disposed at an angle **134** to the display component. This angle **134** is adjustable, for example, to allow a comfortable viewing angle to the display screen to be maintained for different positions of a user **136** and of the portable computer **100**, as illustrated in FIGS. **52**A, **52**B and **52**C. For example, when the user **136** is further from the portable computer, the angle **134***a* (FIG. **52**A) may be made smaller than the angle **134***b* when the user is closer to the portable computer (FIG. **52**B). As discussed above, in one example, the orientation sensor (not shown) may be used to detect, either approximately or precisely, the angle **134** and to provide the information to the computer operating system.

Referring to FIGS. **53**A and **53**B, there is illustrated a portion of the portable computer **100** illustrating a hinge assembly **138** that allows the portable computer to be configured into either the laptop mode (FIG. **53**A) or the easel mode (FIG. **53**B), according to aspects of the invention. According to one embodiment, the hinge assembly **138** accommodates 0-320 degrees of rotation, allowing a minimum angle **134** (see e.g. FIG. **52**C) of 40 degrees. However, it is to be appreciated that the hinge assembly **138** may allow greater or fewer degrees of rotation, provided only that sufficient rotation is allowed so as to configure the portable computer **100** into either the laptop mode or the easel mode. As discussed above, in one embodiment the portable computer **100** includes an orientation sensor (not shown) that is configured to detect a relative orientation of the display component **102** and the base component **104**. In one example, the orientation sensor may be an accelerometer incorporated into the base component **104**, as discussed above. Alternatively, the orientation sensor may be incorporated into the hinge assembly **138** and may be used to detect movement of the hinge assembly, and to translate that movement into an information about the relative orientation of the display component **102** and the base component **104** (for example, a size of the angle **134**). It is also to be appreciated that the orientation sensor may include electronic or mechanical components, or a combination thereof. For example, the hinge assembly may be provide with detents that provide an indication of the mode of the portable computer.

As discussed above, and also illustrated in FIGS. **53**A and **53**B, the portable computer may also comprise a scroll wheel **132** that allows a user to adjust, control and/or select various aspects of the portable computer (e.g., wireless capability or speaker volume) or items displayed on the display screen **110**. A housing **160** may contain or support various mechanical and/or electronic components (not shown) that are coupled to the scroll wheel **132** and are configured to convert physical movement of the scroll wheel into electrical signals. These electrical signals may be provided to the central processing unit of the portable computer **100** which processes the electrical signals so as to translate movement of the scroll wheel into control of a selected

feature, for example, adjusting the volume of the speaker(s) or selecting a particular item displayed on the display screen.

Having thus described several aspects of at least one embodiment, it is to be appreciated various alterations, modifications, and improvements will readily occur to those skilled in the art. Such alterations, modifications, and improvements are intended to be part of this disclosure and are intended to be within the scope of the invention. Accordingly, the foregoing description and drawings are by way of example only, and the scope of the invention should be determined from proper construction of the appended claims, and their equivalents.

The invention claimed is:

1. At least one non-transitory computer-readable storage medium storing processor-executable instructions that, when executed by at least one processor in a computer system comprising a display and a keyboard and being configurable between a plurality of computer system configurations, cause the at least one processor to perform a method comprising:

displaying a plurality of views of a plurality of visual representations of computer content;

detecting a current computer system configuration from at least a first computer system configuration of the plurality of computer system configurations where the keyboard is operable to receive input from an operator of the computer system to control the computer system and a second computer system configuration of the plurality of computer system configurations where the keyboard is inoperable to receive input from the operator of the computer system to control the computer system;

selecting one of the plurality of views for display on the computer system in response to the detected current computer system configuration;

transitioning to the selected one of the plurality of views; and

displaying the selected one of the plurality of views.

2. The at least one non-transitory computer-readable storage medium of claim **1**, wherein each of the first and second computer system configurations comprise a physical positioning of the display relative to the keyboard.

3. The at least one non-transitory computer-readable storage medium of claim **1**, wherein the first computer system configuration is a laptop mode where the keyboard is oriented to be accessible to the operator and wherein the second computer system configuration is an easel mode or a frame mode where the keyboard is oriented to be inaccessible to the operator.

4. The at least one non-transitory computer-readable storage medium of claim **1**, wherein the plurality of views includes a home view and wherein the method further comprises displaying the home view.

5. The at least one non-transitory computer-readable storage medium of claim **4**, wherein the home view comprises a plurality of interactive cards each comprising a first display boundary and being associated with at least one system operation.

6. The at least one non-transitory computer-readable storage medium of claim **5**, wherein the method further comprises detecting computer focus on an interactive card of the plurality of interactive cards in the home view.

7. The at least one non-transitory computer-readable storage medium of claim **6**, wherein the method further comprises changing a display boundary of the interactive card from the first display boundary to a second display boundary that is different in size than the first display boundary responsive to the computer focus on the interactive card.

8. The at least one non-transitory computer-readable storage medium of claim **7**, wherein the second display boundary is larger than the first display boundary.

9. The at least one non-transitory computer-readable storage medium of claim **5**, wherein the method further comprises detecting selection of an interactive card of the plurality of interactive cards.

10. The at least one non-transitory computer-readable storage medium of claim **9**, wherein the method further comprises executing the at least one system operation associated with the interactive card responsive to detecting selection of the interactive card.

11. At least one non-transitory computer-readable storage medium storing processor-executable instructions that, when executed by at least one processor in a computer system comprising a display and a keyboard and being configurable between a plurality of computer system configurations, cause the at least one processor to perform a method comprising:

displaying a plurality of views of a plurality of visual representations of computer content;

detecting a current computer system configuration from at least a first computer system configuration from the plurality of computer system configurations where the keyboard is positioned to receive input from an operator of the computer system and a second computer system configuration from the plurality of computer system configurations where the keyboard is not positioned to receive input from the operator of the computer system;

selecting one of the plurality of views for display on the computer system in response to the detected current computer system configuration; and

transitioning the display component to the selected one of the plurality of views.

12. The at least one non-transitory computer-readable storage medium of claim **11**, wherein each of the first and second computer system configurations comprise a physical positioning of the display relative to the keyboard.

13. The at least one non-transitory computer-readable storage medium of claim **11**, wherein the first computer system configuration is a laptop mode where the keyboard is oriented to be accessible to the operator and wherein the second computer system configuration is an easel mode or a frame mode where the keyboard is oriented to be inaccessible to the operator.

14. The at least one non-transitory computer-readable storage medium of claim **11**, wherein the plurality of views includes a home view and wherein the method further comprises displaying the home view.

15. The at least one non-transitory computer-readable storage medium of claim **14**, wherein the home view comprises a plurality of interactive cards each comprising a first display boundary and being associated with at least one system operation.

16. The at least one non-transitory computer-readable storage medium of claim **15**, wherein the method further comprises detecting computer focus on an interactive card of the plurality of interactive cards.

17. The at least one non-transitory computer-readable storage medium of claim **16**, wherein the method further comprises changing a display boundary of the interactive card from the first display boundary to a second display

boundary that is different in size than the first display boundary responsive to the computer focus on the interactive card.

18. The at least one non-transitory computer-readable storage medium of claim **17**, wherein the second display boundary is larger than the first display boundary.

19. The at least one non-transitory computer-readable storage medium of claim **15**, wherein the method further comprises detecting selection of an interactive card of the plurality of interactive cards.

20. The at least one non-transitory computer-readable storage medium of claim **19**, wherein the method further comprises executing the at least one system operation associated with the interactive card responsive to detecting selection of the interactive card.

* * * * *

EXHIBIT H

US008612888B2

(12) **United States Patent**
Pennington et al.

(10) **Patent No.: US 8,612,888 B2**
(45) **Date of Patent: *Dec. 17, 2013**

(54) **METHOD AND APPARATUS FOR MANAGING DIGITAL MEDIA CONTENT**

(75) Inventors: **Robert Sanford Havoc Pennington**, Asheville, NC (US); **Noah Bruce Guyot**, Mill Valley, CA (US); **Daniel Kuo**, San Francisco, CA (US); **Jenea Boshart Hayes**, Castro Valley, CA (US); **Aaron Tang**, Somerville, MA (US); **David Livingstone Fore**, Oakland, CA (US); **John Chuang**, Brookline, MA (US); **Chris Bambacus**, Framingham, MA (US); **Eben Eliason**, Providence, RI (US); **Chris Moody**, Boulder, CO (US); **Yves Behar**, Oakland, CA (US); **Joshua Morenstein**, San Francisco, CA (US); **Christopher Hibmacronan**, Oakland, CA (US); **Naoya Edahiro**, San Francisco, CA (US); **Matthew David Day**, San Francisco, CA (US)

(73) Assignee: **LITL, LLC**, Boston, MA (US)

(*) Notice: Subject to any disclaimer, the term of this patent is extended or adjusted under 35 U.S.C. 154(b) by 937 days.
This patent is subject to a terminal disclaimer.

(21) Appl. No.: **12/611,282**

(22) Filed: **Nov. 3, 2009**

(65) **Prior Publication Data**

US 2010/0174993 A1 Jul. 8, 2010

Related U.S. Application Data

(63) Continuation-in-part of application No. 12/170,951, filed on Jul. 10, 2008, which is a continuation-in-part of application No. 12/170,939, filed on Jul. 10, 2008, now Pat. No. 8,269,688, which is a continuation-in-part of application No. 12/416,479, filed on Apr. 1, 2009.

(60) Provisional application No. 61/041,365, filed on Apr. 1, 2008.

(51) **Int. Cl.**

G06F 3/048	(2013.01)
G09G 5/00	(2006.01)
G06F 1/16	(2006.01)

(52) **U.S. Cl.**
USPC **715/810**; 715/764; 345/156; 361/679.02

(58) **Field of Classification Search**
USPC 715/810, 764; 345/156; 361/679.02
See application file for complete search history.

(56) **References Cited**

U.S. PATENT DOCUMENTS

3,468,576	A	9/1969	Beyer et al.
4,939,514	A	7/1990	Miyazaki

(Continued)

FOREIGN PATENT DOCUMENTS

CN	1292112	A	4/2001
DE	19952486		5/2001

(Continued)

OTHER PUBLICATIONS

http://laptop.org/en/laptop/start/ebook.shtml accessed on Sep. 29, 2008.

(Continued)

Primary Examiner — Ting Lee
(74) *Attorney, Agent, or Firm* — Lando & Anastasi LLP

(57) **ABSTRACT**

A streamlined computer device can include Functionally provided to a user tailored to the type of content displayed, accessed and/or managed and can include a plurality selectable I/O profiles. According to some embodiments, the methods may include displaying a GUI on a device, wherein the GUI comprises at least a plurality of views of digital media content, providing for transition between the plurality of views in response to selection of an I/O profile and in response to activation of a view selector component by a user, executing an association with the at least one of the plurality of visual representations with digital media content in response to selection, transitioning a display on the computing device to a view of the digital media content, and providing for display of user digital media content and referenced digital media content in the view of the digital media content.

27 Claims, 37 Drawing Sheets

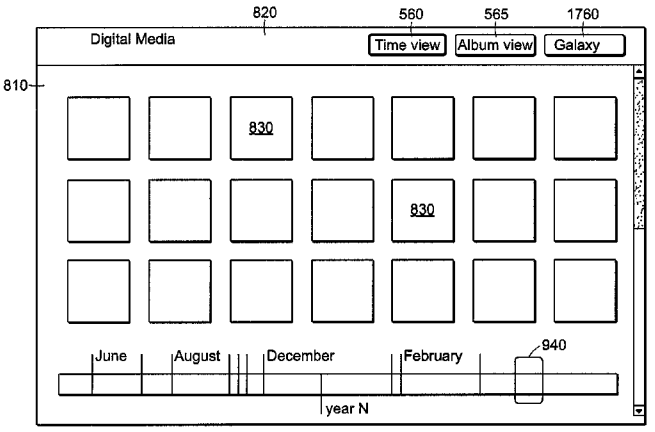

(56) **References Cited**

U.S. PATENT DOCUMENTS

D333,636	S	3/1993	Issa	
5,200,913	A	4/1993	Hawkins et al.	
5,268,817	A	12/1993	Miyagawa et al.	
5,436,954	A	7/1995	Nishiyama et al.	
5,515,345	A	5/1996	Barreira	
5,547,698	A	8/1996	Lansbergen	
5,712,760	A	1/1998	Coulon	
D391,927	S	3/1998	Faranda	
D392,944	S	3/1998	Issa	
D395,868	S	7/1998	Iino	
5,790,371	A	8/1998	Latocha	
5,793,355	A	8/1998	Youens	
5,796,575	A	8/1998	Podwalny et al.	
D399,526	S	10/1998	Brady	
5,825,352	A	10/1998	Bisset et al.	
5,841,631	A	11/1998	Shin et al.	
5,900,848	A	5/1999	Haneda	
5,926,364	A	7/1999	Karidis	
5,949,643	A	9/1999	Batio	
D416,003	S	11/1999	Schiefer et al.	
5,987,704	A	11/1999	Tang	
6,005,767	A	12/1999	Ku et al.	
6,067,224	A	5/2000	Nobuchi	
6,097,389	A *	8/2000	Morris et al.	715/804
6,144,358	A	11/2000	Narayanaswamy et al.	
6,222,507	B1	4/2001	Gouko	
6,223,393	B1	5/2001	Knopf	
6,262,885	B1	7/2001	Emma et al.	
6,266,236	B1	7/2001	Ku et al.	
6,275,376	B1	8/2001	Moon	
6,295,038	B1	9/2001	Rebeske	
6,302,612	B1	10/2001	Fowler	
6,323,846	B1	11/2001	Westerman et al.	
D452,238	S	12/2001	Sugano	
6,327,482	B1	12/2001	Miyashita	
6,341,061	B1	1/2002	Eisbach et al.	
6,343,006	B1	1/2002	Moscovitch et al.	
6,377,444	B1	4/2002	Price et al.	
D462,069	S	8/2002	Gatto	
6,437,974	B1	8/2002	Liu	
D463,797	S	10/2002	Andre	
6,464,195	B1	10/2002	Hildebrandt	
6,492,974	B1	12/2002	Nobuchi et al.	
6,510,049	B2	1/2003	Rosen	
D476,326	S	6/2003	Tanimura	
D479,708	S	9/2003	Hwang	
6,628,267	B2	9/2003	Karidis et al.	
6,642,909	B1	11/2003	Oliva	
6,659,516	B2	12/2003	Wang et al.	
6,661,426	B1	12/2003	Jetha et al.	
6,665,175	B1	12/2003	deBoer	
6,693,652	B1	2/2004	Barrus et al.	
6,697,055	B1	2/2004	Bullister	
D491,177	S	6/2004	Andre	
D491,936	S	6/2004	Jao	
D494,162	S	8/2004	Kondo	
6,771,494	B2	8/2004	Shimano	
D495,674	S	9/2004	Yoo	
D495,694	S	9/2004	Chase	
6,788,527	B2	9/2004	Doczy et al.	
6,819,304	B2	11/2004	Branson	
6,829,140	B2	12/2004	Shimano et al.	
6,859,219	B1	2/2005	Sall	
D504,128	S	4/2005	Maskatia	
6,882,335	B2	4/2005	Saarinen	
6,944,012	B2	9/2005	Doczy et al.	
6,963,485	B2	11/2005	Hong	
D512,997	S	12/2005	Lee	
6,972,752	B2	12/2005	Nako et al.	
D513,509	S	1/2006	Kawa	
D516,552	S	3/2006	Iseki	
D517,541	S	3/2006	Maskatia	
D518,042	S	3/2006	Kanayama	
7,035,665	B2	4/2006	Kido et al.	
D523,429	S	6/2006	Lin	
7,061,472	B1	6/2006	Schweizer et al.	
7,072,179	B1	7/2006	Curran et al.	
D528,541	S	9/2006	Maskatia	
D528,993	S	9/2006	Wilson	
7,138,962	B2	11/2006	Koenig	
D534,531	S	1/2007	Ogasawara	
D535,292	S	1/2007	Shi et al.	
D544,846	S	6/2007	Kindle	
7,239,508	B2	7/2007	Ferrucei	
7,250,207	B1	7/2007	Heal et al.	
7,366,994	B2 *	4/2008	Loui	715/764
7,428,142	B1	9/2008	Ligtenberg	
D581,371	S	11/2008	Richmond	
7,467,356	B2	12/2008	Gettman et al.	
7,522,946	B2	4/2009	Im	
D593,085	S	5/2009	Behar	
D593,086	S	5/2009	Behar	
D593,091	S	5/2009	Behar	
D605,635	S	12/2009	Edahiro	
7,698,407	B2	4/2010	Mattox, Jr. et al.	
7,756,928	B1	7/2010	Meenan et al.	
7,869,834	B2	1/2011	Seol et al.	
2001/0032320	A1	10/2001	Abdelnur et al.	
2002/0005818	A1	1/2002	Bruzzone	
2002/0010707	A1	1/2002	Chang et al.	
2002/0021258	A1	2/2002	Koenig	
2003/0048595	A1	3/2003	Hsieh	
2003/0107603	A1	6/2003	Clapper	
2003/0109232	A1	6/2003	Park	
2004/0001049	A1	1/2004	Oakley	
2004/0203535	A1	10/2004	Kim	
2004/0207568	A1	10/2004	Ooshima et al.	
2004/0212602	A1	10/2004	Nako et al.	
2004/0228076	A1	11/2004	Clapper	
2005/0018396	A1	1/2005	Nakajima	
2005/0041378	A1	2/2005	Hamada	
2005/0063145	A1	3/2005	Homer	
2005/0083642	A1	4/2005	Senpuku et al.	
2005/0091596	A1 *	4/2005	Anthony et al.	715/712
2005/0128695	A1	6/2005	Han	
2005/0134717	A1	6/2005	Misawa	
2005/0146845	A1	7/2005	Moscovitch	
2005/0210399	A1	9/2005	Filner et al.	
2005/0221865	A1	10/2005	Nishiyama et al.	
2005/0257400	A1	11/2005	Sommerer et al.	
2005/0282596	A1	12/2005	Park	
2006/0126284	A1	6/2006	Moscovitch	
2006/0238439	A1	10/2006	Fuller et al.	
2006/0264243	A1	11/2006	Aarras	
2006/0268500	A1	11/2006	Kuhn	
2007/0138806	A1	6/2007	Ligtenberg et al.	
2007/0182663	A1	8/2007	Biech	
2007/0240076	A1	10/2007	Astala et al.	
2007/0242421	A1	10/2007	Goschin et al.	
2007/0247446	A1	10/2007	Orsley et al.	
2008/0024388	A1	1/2008	Bruce	
2008/0024465	A1	1/2008	Hawkins et al.	
2008/0042987	A1	2/2008	Westerman et al.	
2008/0062625	A1	3/2008	Batio	
2008/0158795	A1	7/2008	Aoki et al.	
2008/0174570	A1	7/2008	Jobs et al.	
2008/0235594	A1	9/2008	Bhumkar et al.	
2008/0284738	A1	11/2008	Hovden	
2009/0019383	A1 *	1/2009	Riley et al.	715/764
2009/0150826	A1	6/2009	Lyndersay et al.	
2009/0190295	A1	7/2009	Chin et al.	
2009/0244012	A1	10/2009	Behar et al.	
2009/0244832	A1	10/2009	Behar et al.	
2009/0275366	A1	11/2009	Schilling	
2009/0300511	A1	12/2009	Behar	
2009/0303676	A1	12/2009	Behar	
2009/0322790	A1	12/2009	Behar et al.	
2010/0174993	A1	7/2010	Pennington	

FOREIGN PATENT DOCUMENTS

EP	0588210	3/1993
JP	5-197507 A	8/1993
JP	6090200 A	3/1994

(56) **References Cited**

FOREIGN PATENT DOCUMENTS

JP	6-242853	A	9/1994
JP	6-259166	A	9/1994
JP	8-179851	A	7/1996
JP	10-111658	A	4/1998
JP	11-296259		10/1999
JP	2001-167211	A	6/2001
JP	2004-302179	A	10/2004
JP	2005-159741	A	6/2005
JP	2005-242436	A	9/2005
JP	2006-227409		8/2006
KR	10-2000-0036647	A	7/2000

OTHER PUBLICATIONS

Miller, M., "Creating a Digital Home Entertainment System with Windows Media Center", Apr 2006, Que.

International Search Report from a commonly owned PCT application PCT/US09/39117.

* cited by examiner

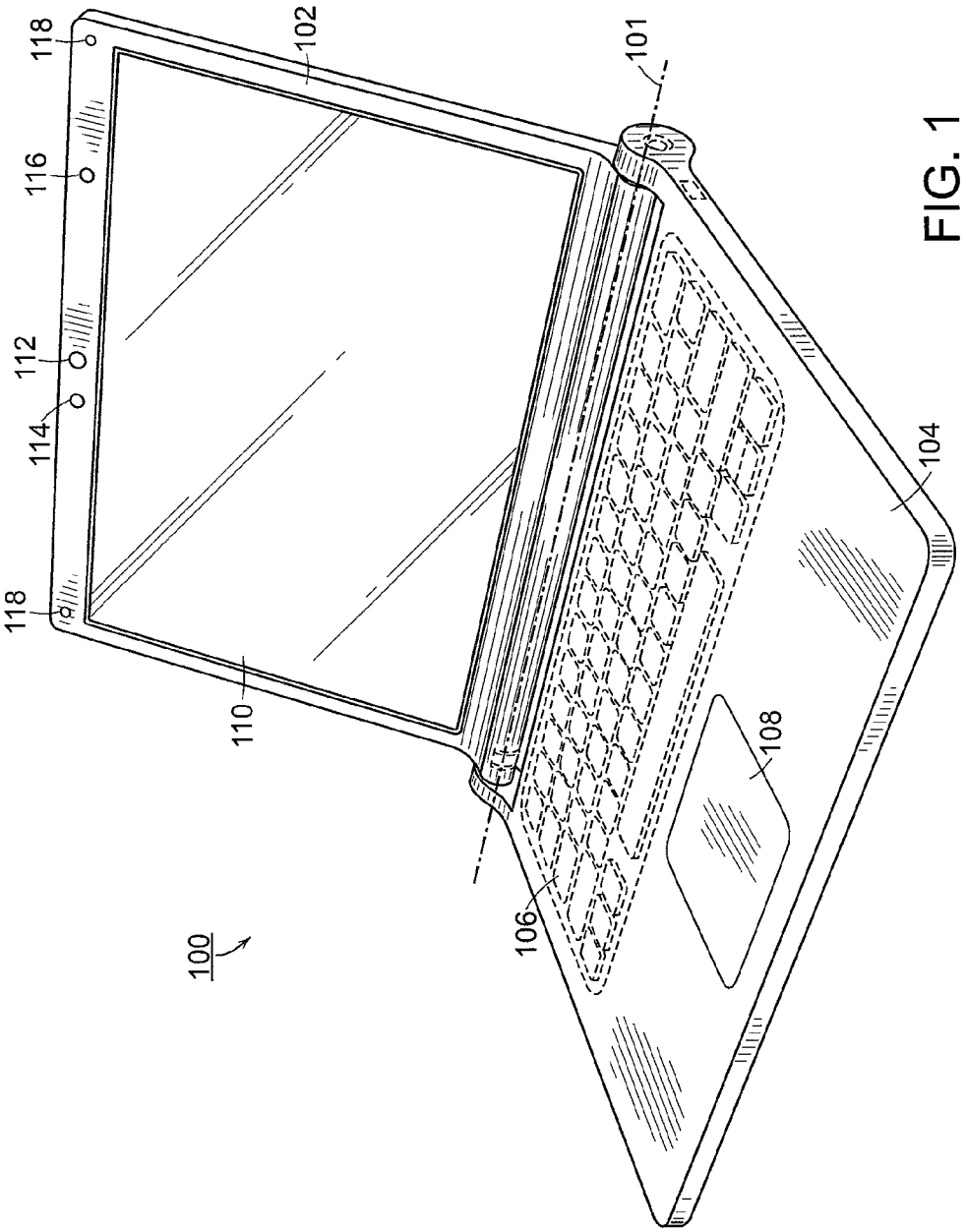

FIG. 1

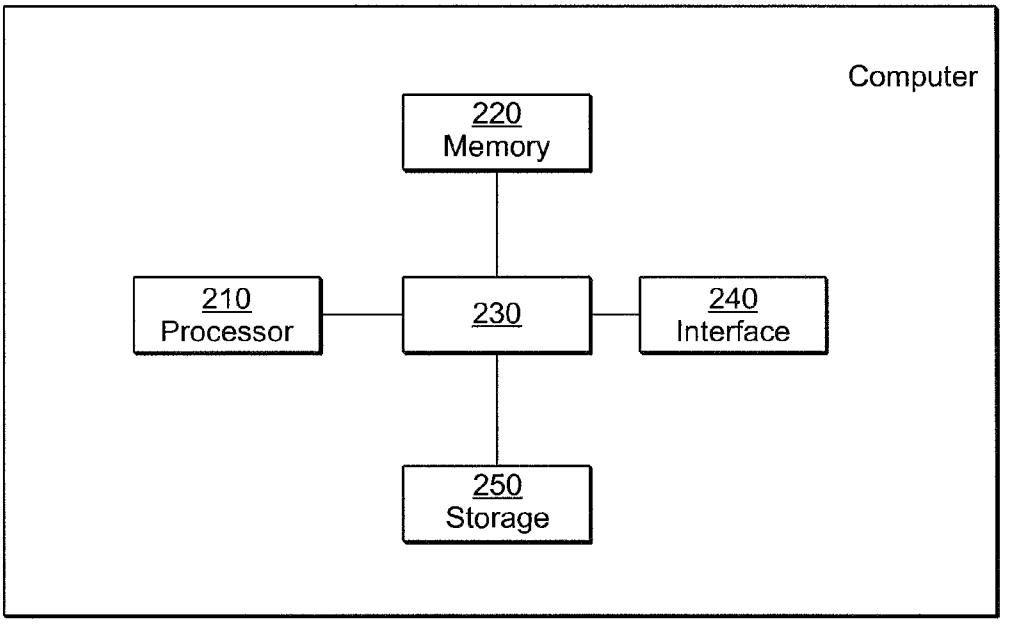
Computer
220
Memory
210
Processor
230
240
Interface
250
Storage

FIG. 2

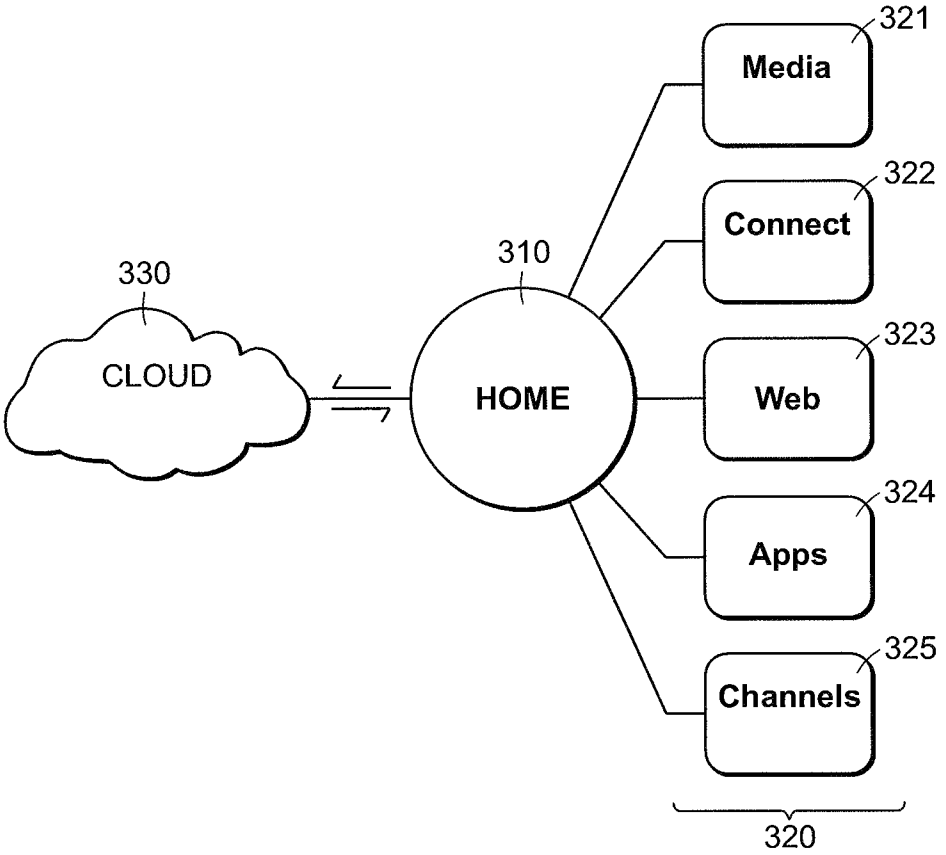
321
Media
322
Connect
310
330
CLOUD
HOME
323
Web
324
Apps
325
Channels
320

FIG. 3

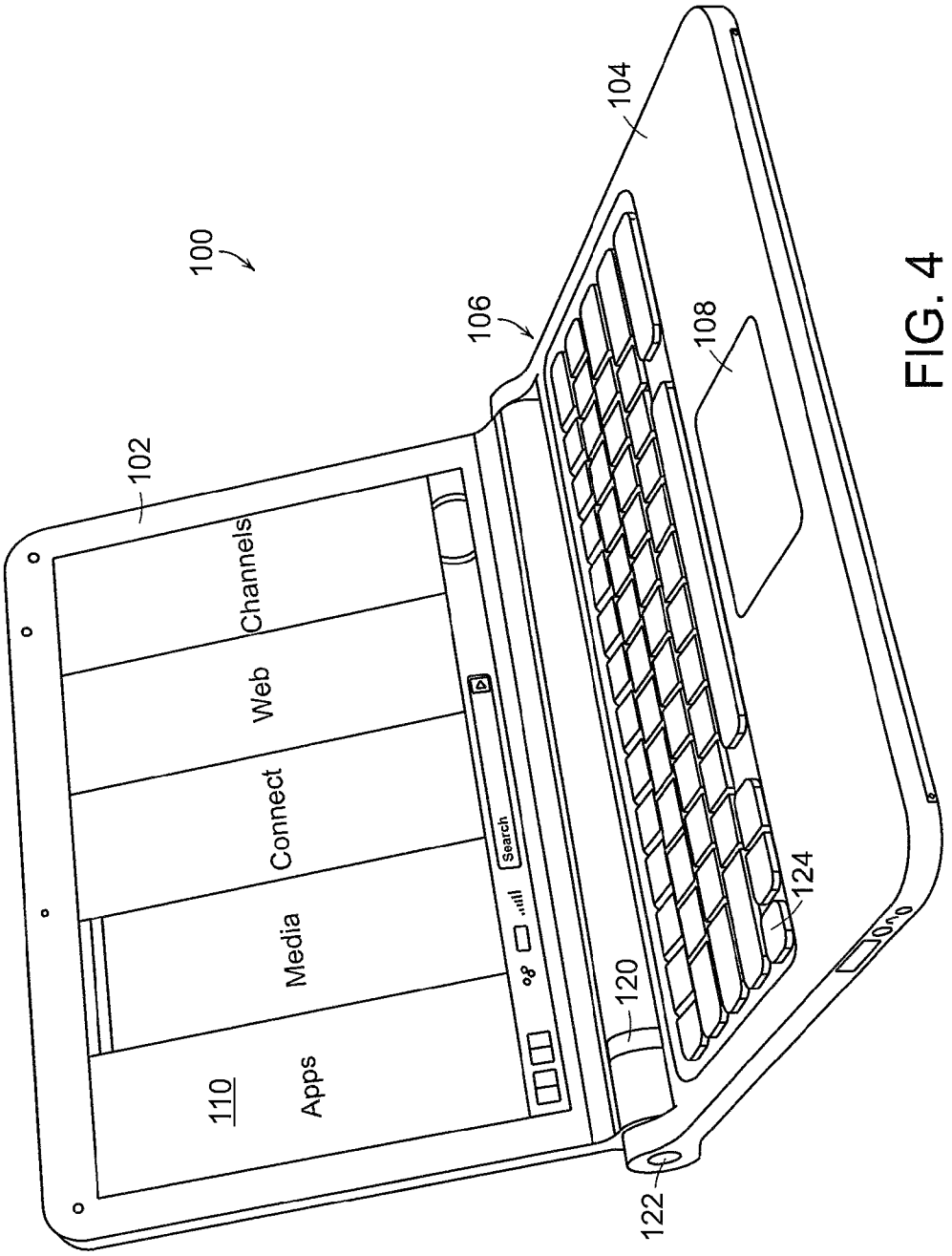
100
102
104
106
108
110
120
122
124
Apps
Media
Connect
Web
Channels
Search

FIG. 4

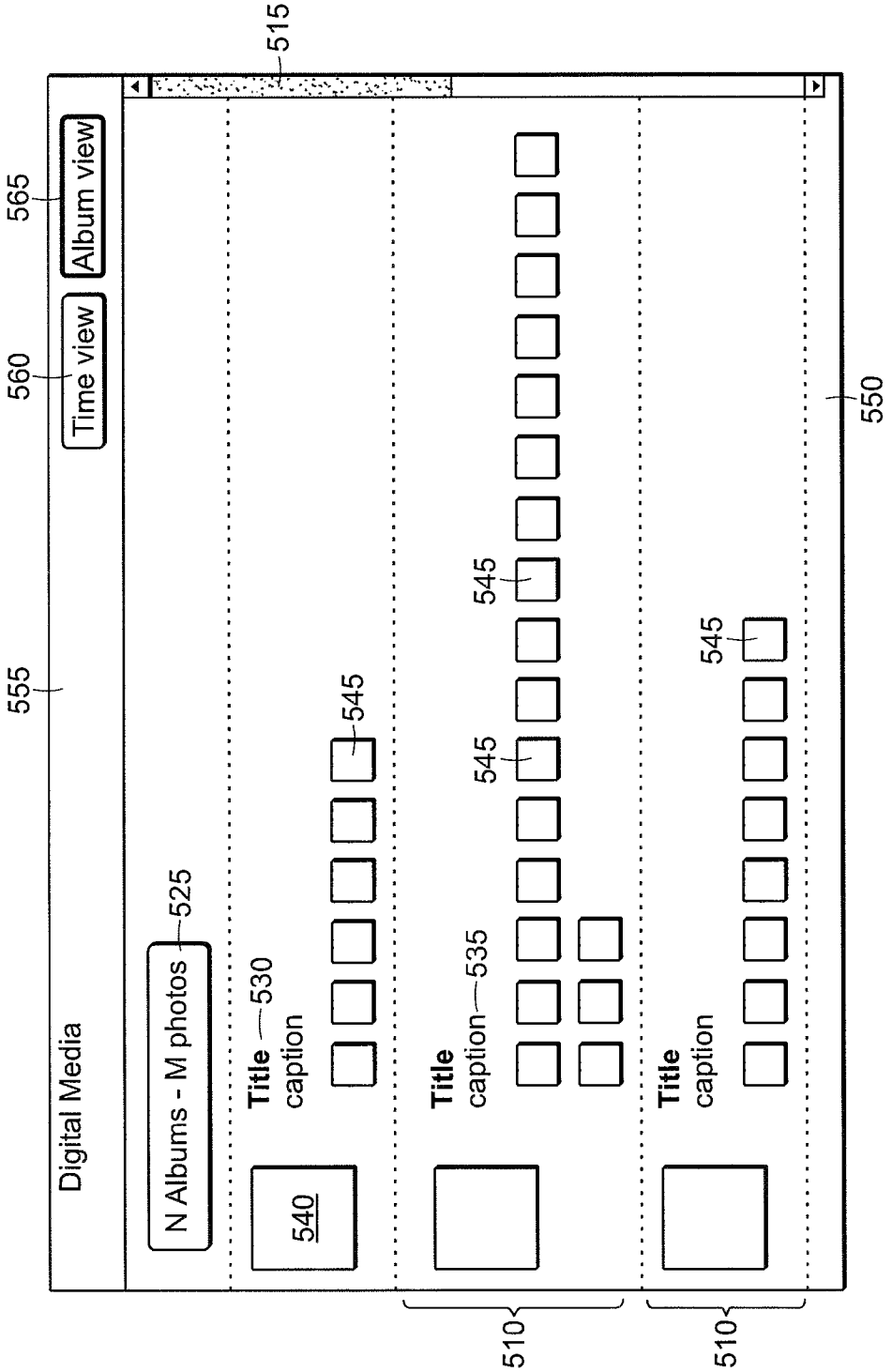
515
565
Album view
560
Time view
555
Digital Media
N Albums - M photos
525
540
Title
caption
530
545
Title
caption
535
545
545
Title
caption
545
510
510
550

FIG. 5

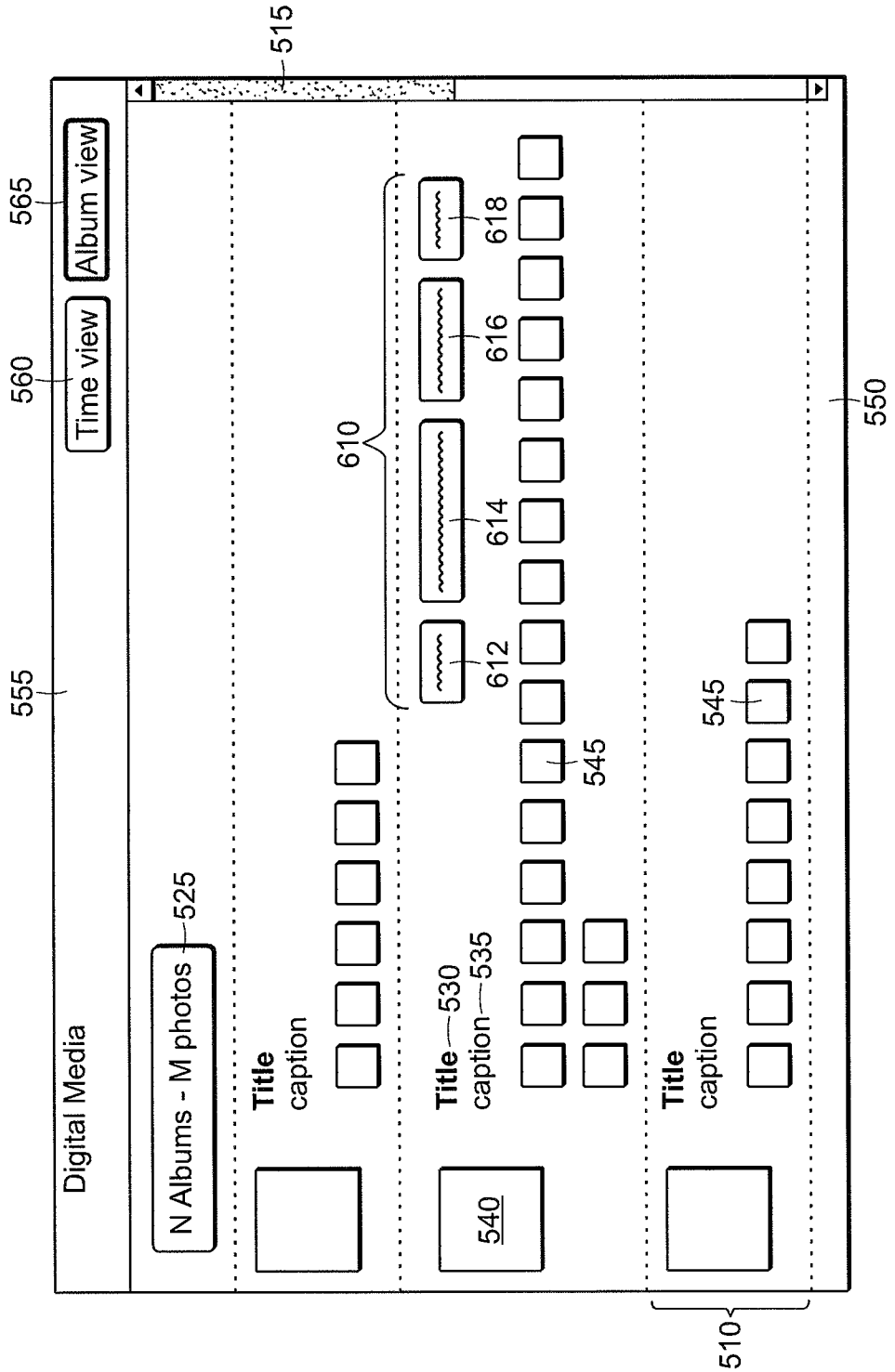
515
565
Album view
560
Time view
555
Digital Media
N Albums - M photos
525
Title
caption
610
612
614
616
618
Title
530
caption
535
540
545
545
Title
caption
510
550

FIG. 6

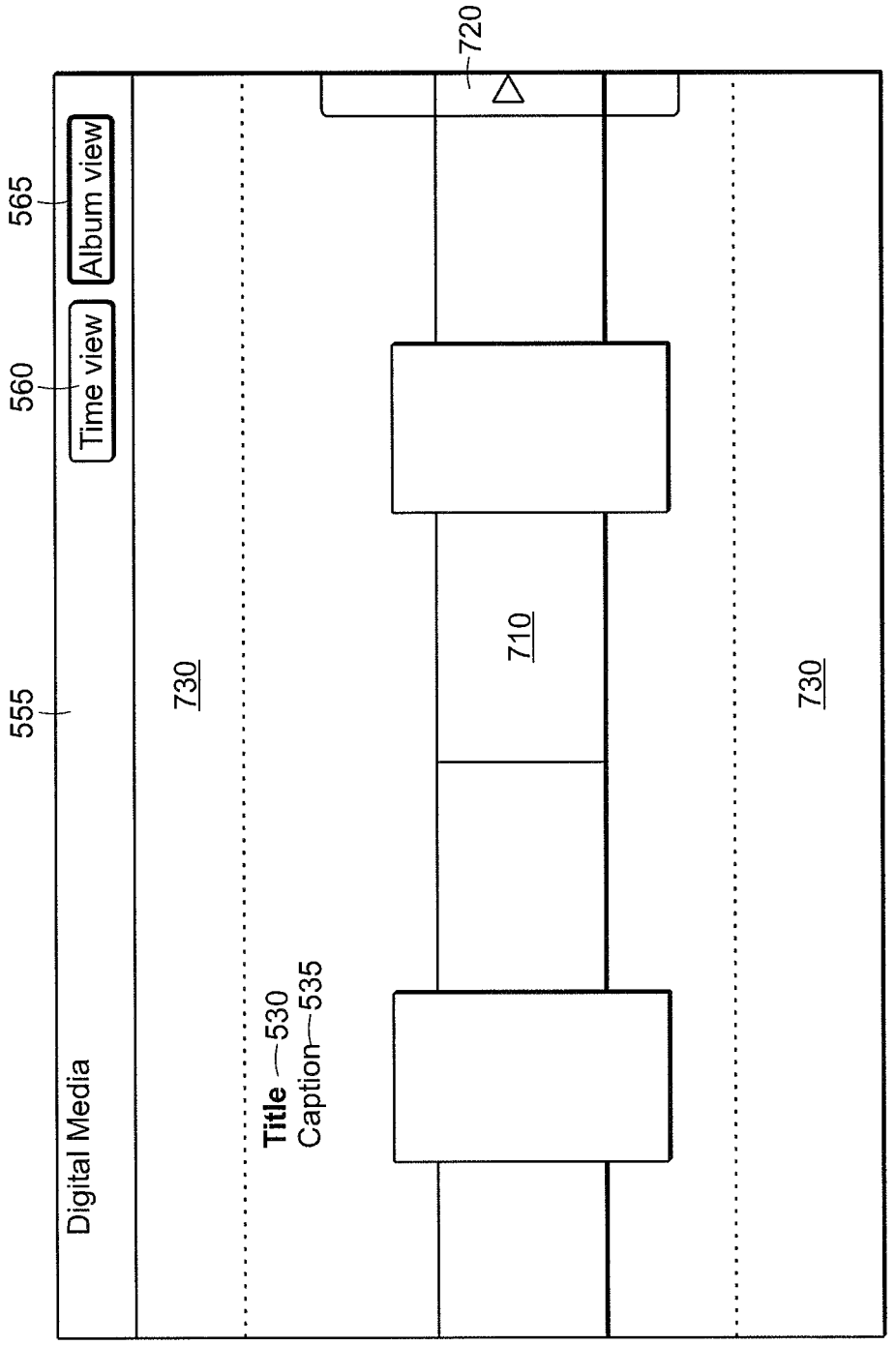
555
Digital Media
560
Time view
565
Album view
730
Title 530
Caption 535
720
710
730

FIG. 7A

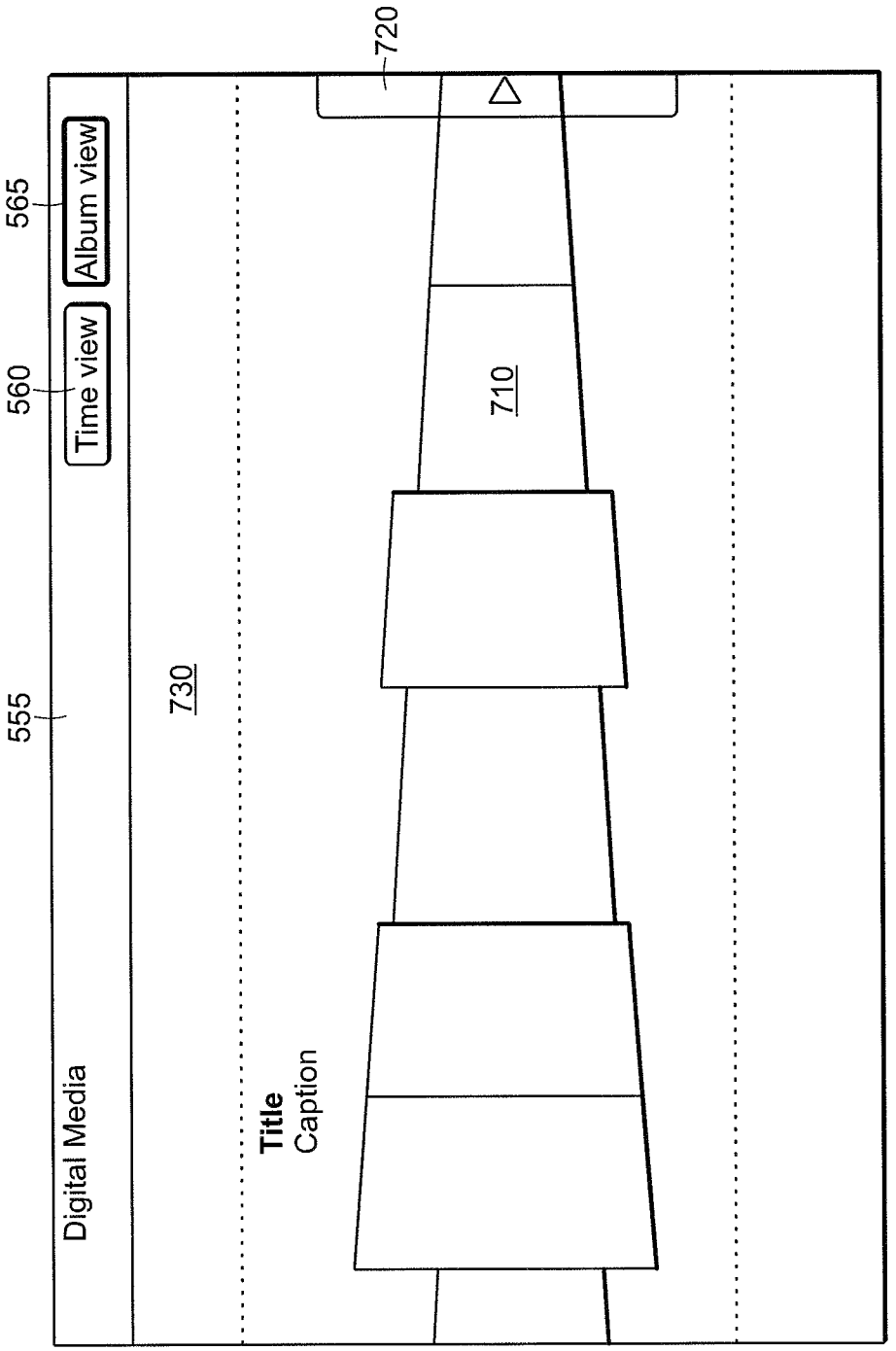
555
Digital Media
560
Time view
565
Album view
730
720
710
Title
Caption

FIG. 7B

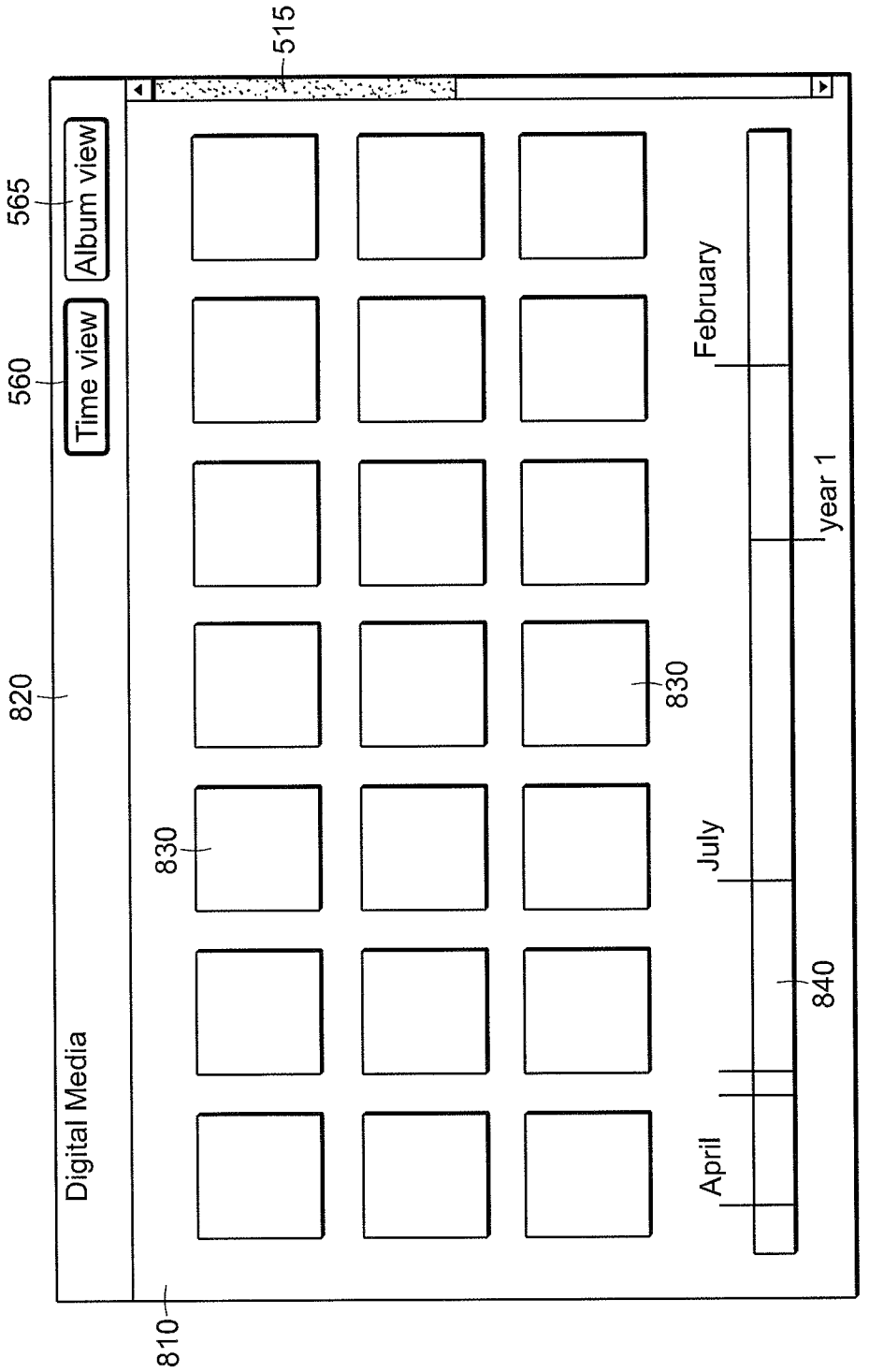
515
565
Album view
560
Time view
820
Digital Media
830
830
810
February
year 1
July
840
April

FIG. 8

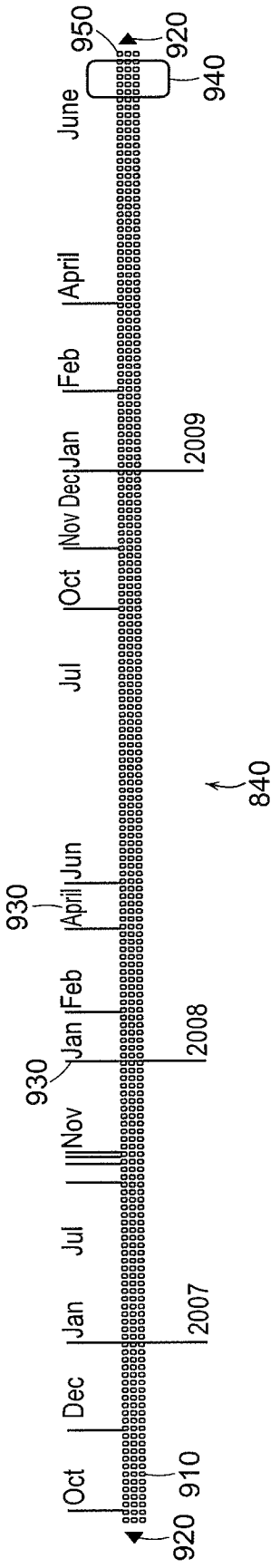
950
920
940
June
April
Feb
Jan
2009
Nov Dec
Oct
Jul
840
Jun
930
April
Feb
Jan
2008
930
Nov
Jul
Jan
2007
Dec
Oct
910
920

FIG. 9

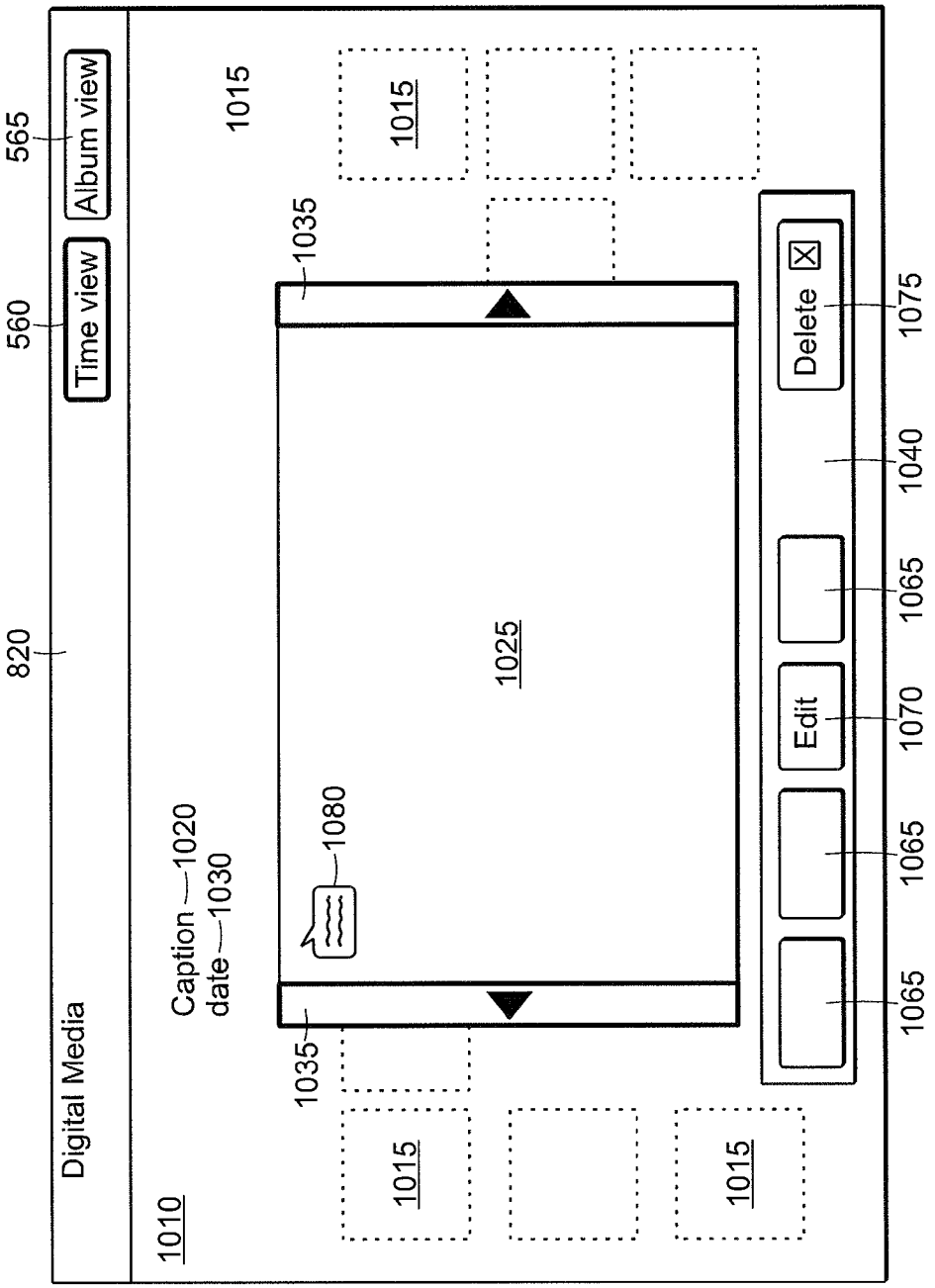
Digital Media
Time view
Album view
820
560
565
1010
1015
1015
1015
1015
1035
1035
1025
1080
Caption 1020
date 1030
Delete
Edit
1065
1065
1065
1070
1040
1075

FIG. 10

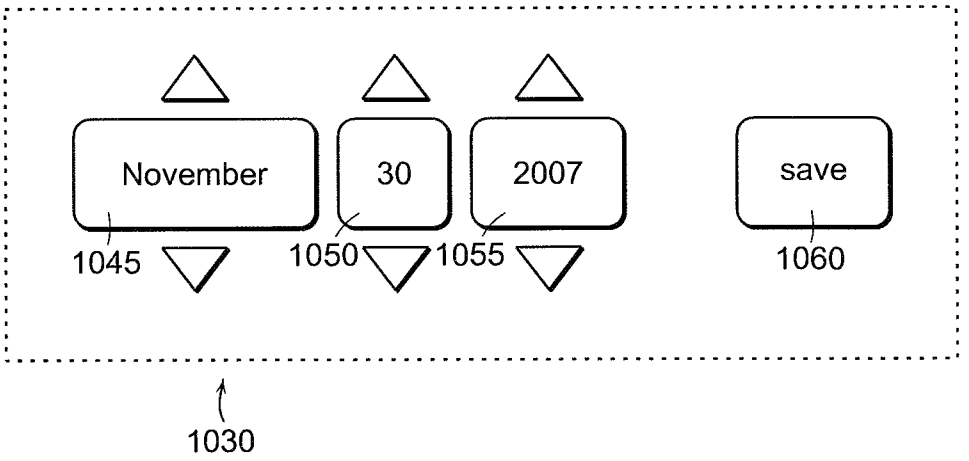

FIG. 11

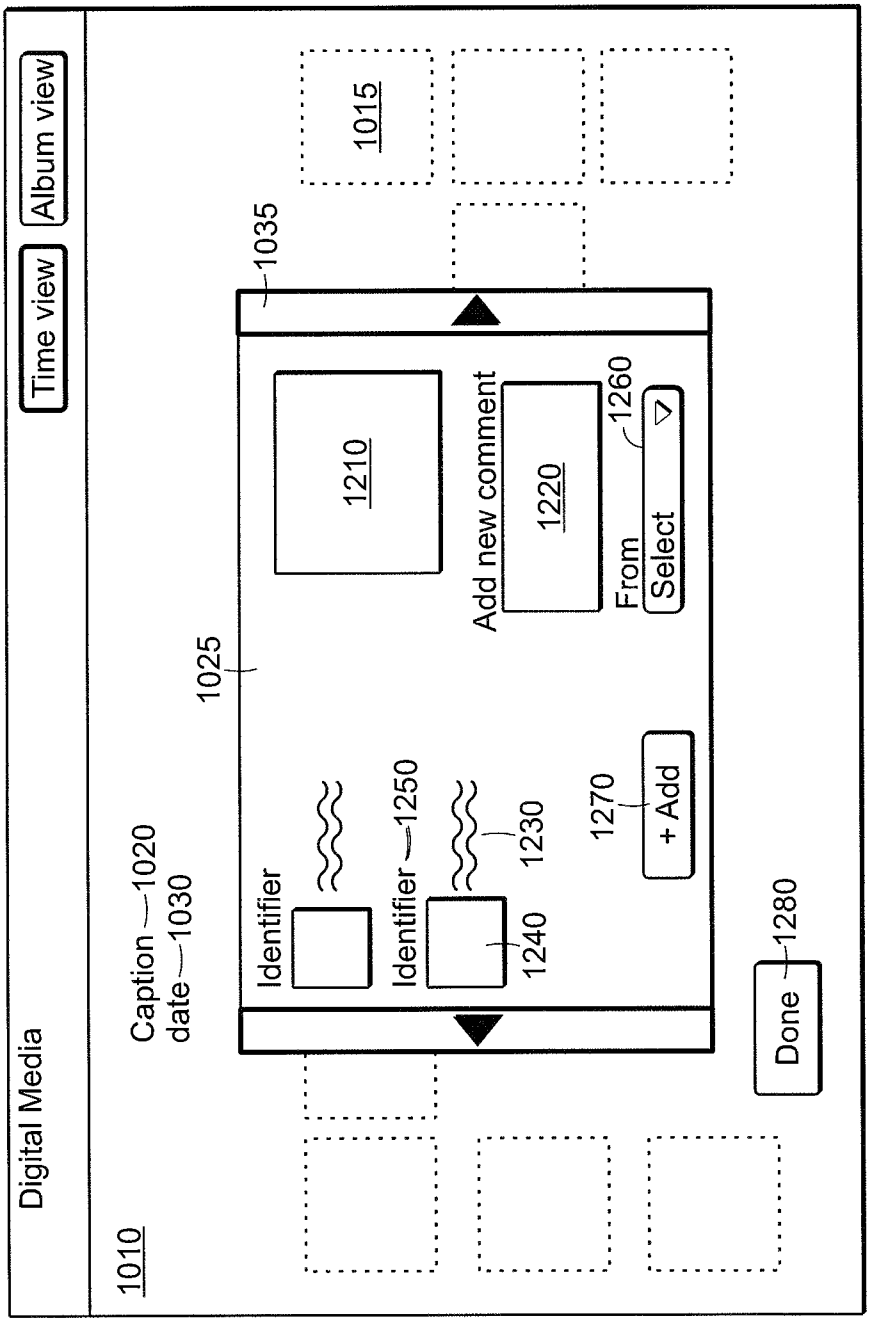
Digital Media
Time view
Album view
1010
1015
1035
1025
1210
Add new comment
1220
1260
From
Select
Caption
date
1020
1030
Identifier
Identifier
1250
1230
1240
1270
+ Add
Done
1280

FIG. 12

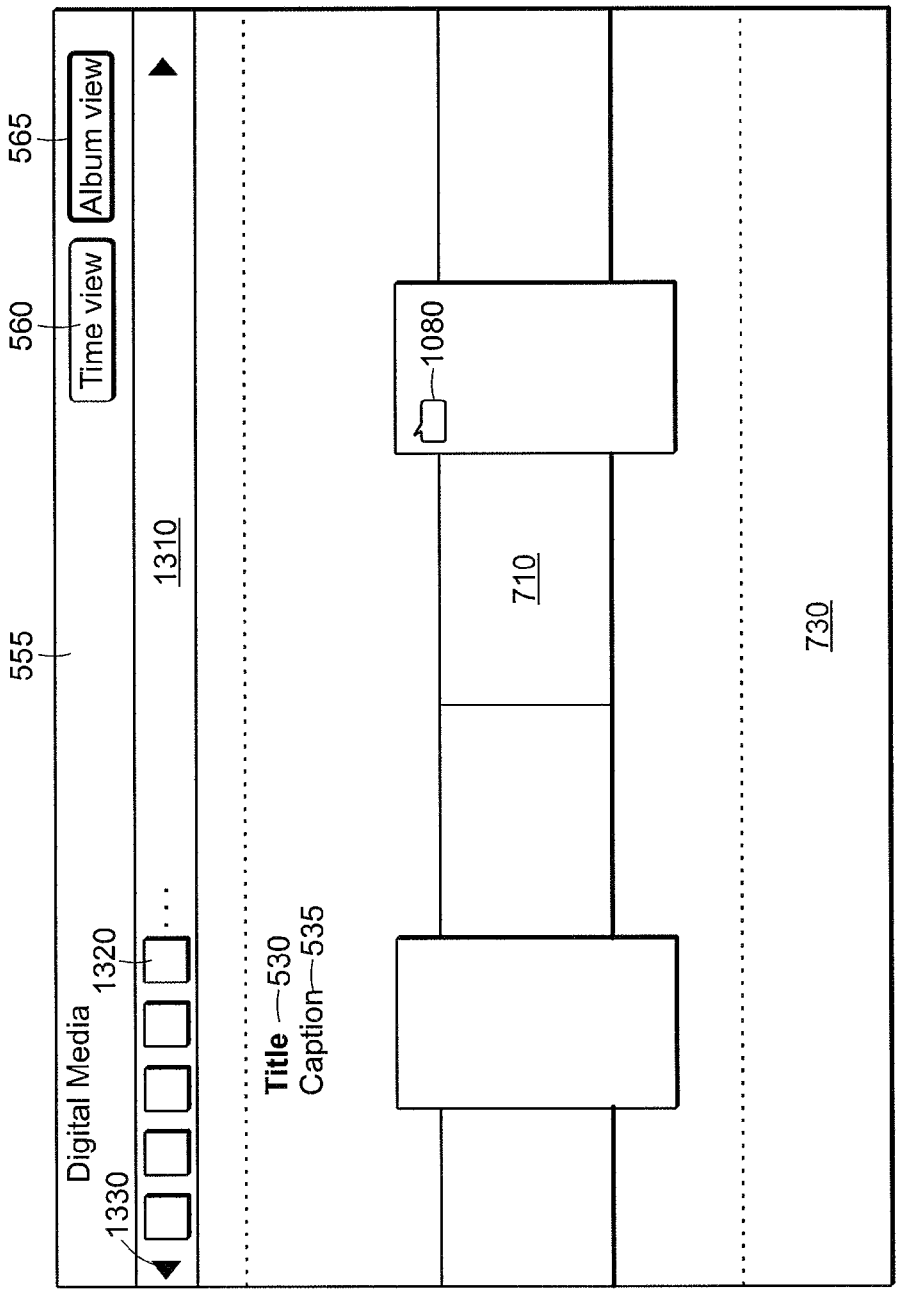
565
Album view
560
Time view
555
Digital Media
1320
1330
1310
Title 530
Caption 535
1080
710
730

FIG. 13A

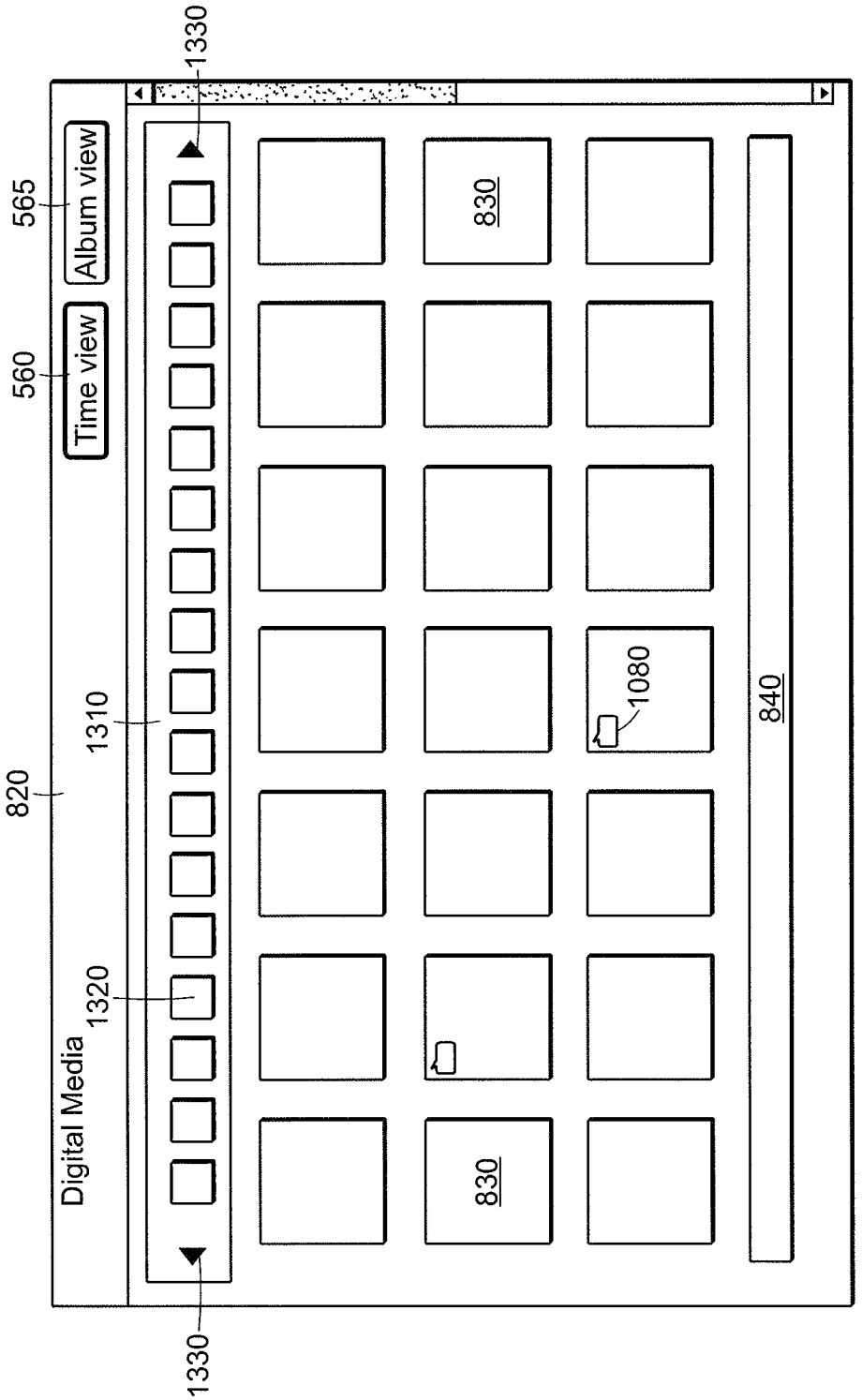
1330
565
Album view
560
Time view
820
1310
1320
Digital Media
1330
830
830
1080
840

FIG. 13B

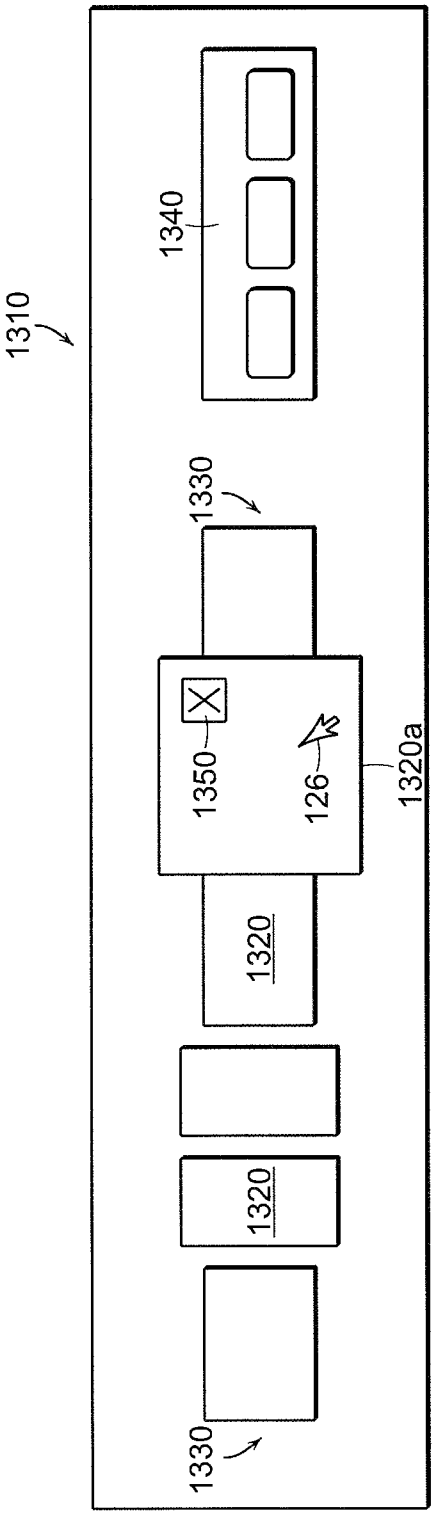

FIG. 13C

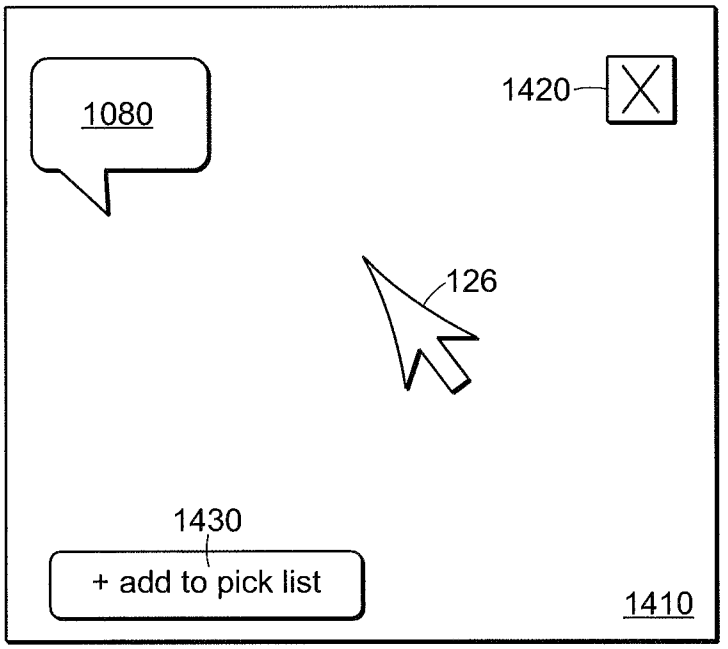

FIG. 14

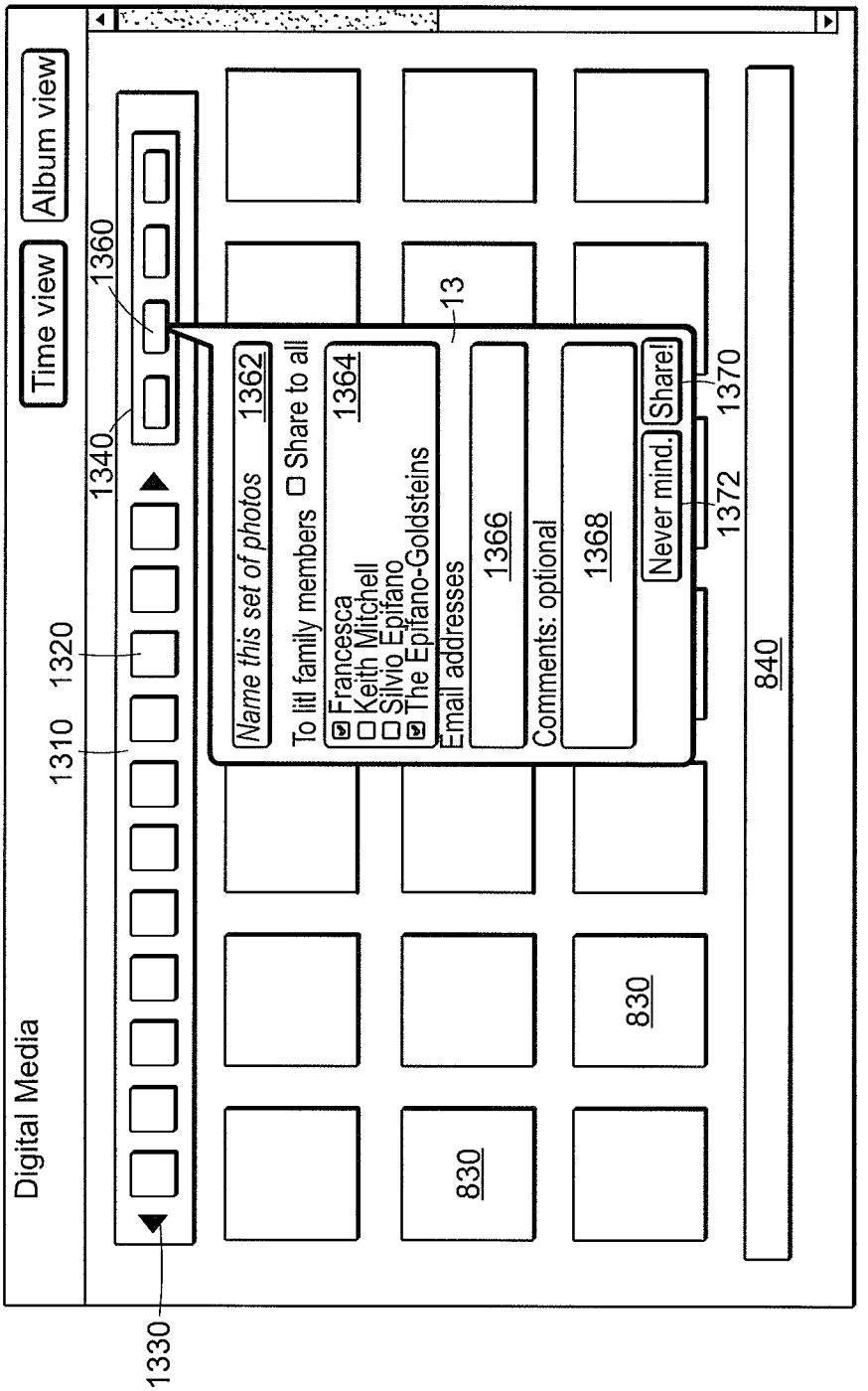
Digital Media
Time view
Album view
1330
1310
1320
1340
1360
Name this set of photos
1362
Share to all
To litl family members
1364
Francesca
Keith Mitchell
Silvio Epifano
The Epifano-Goldsteins
Email addresses
1366
Comments: optional
1368
Never mind.
Share!
1370
1372
13
830
830
840

FIG. 15

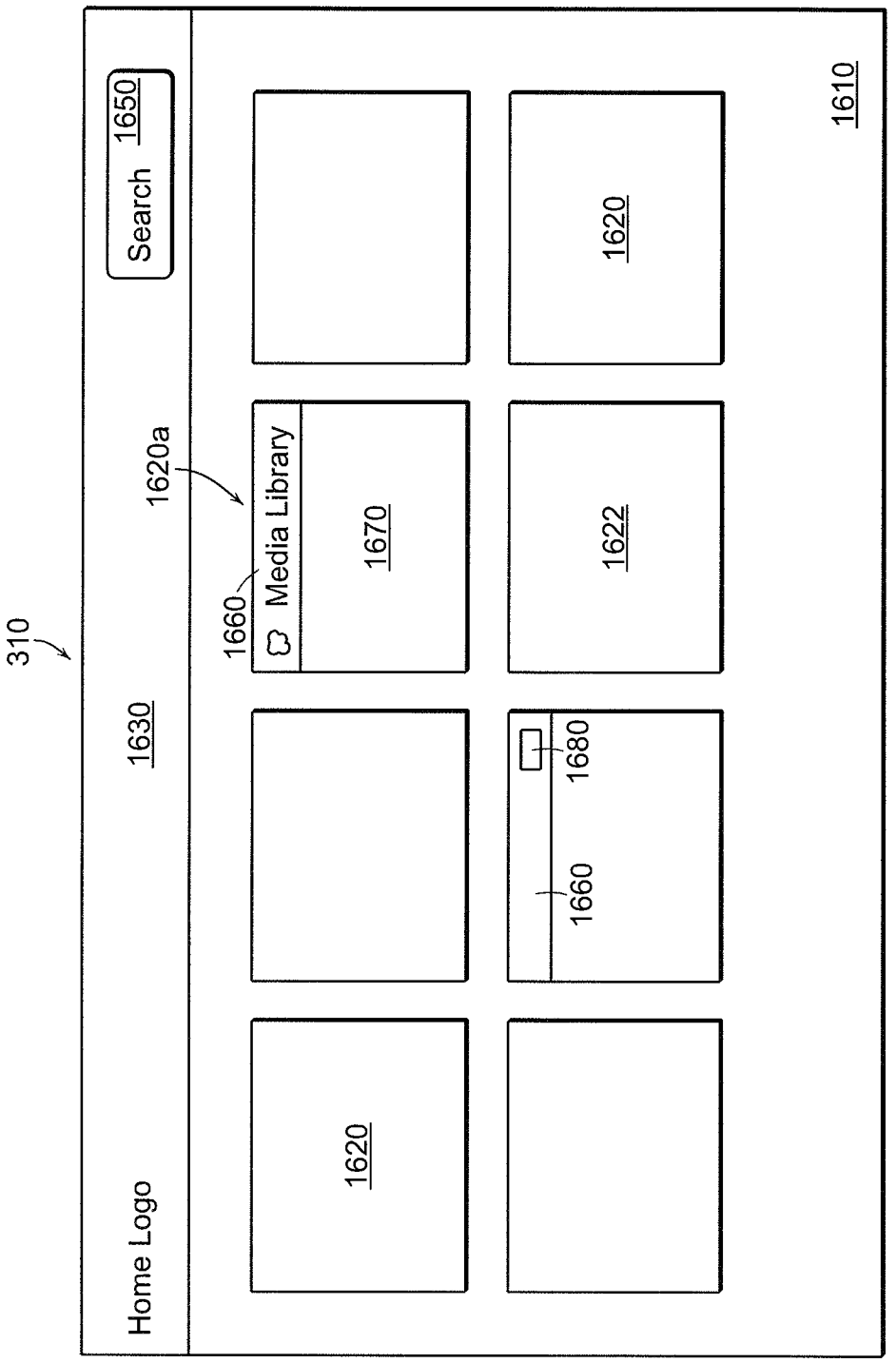
310
Home Logo
1630
Search
1650
1620a
1660
Media Library
1670
1620
1660
1680
1620
1622
1620
1610

FIG. 16

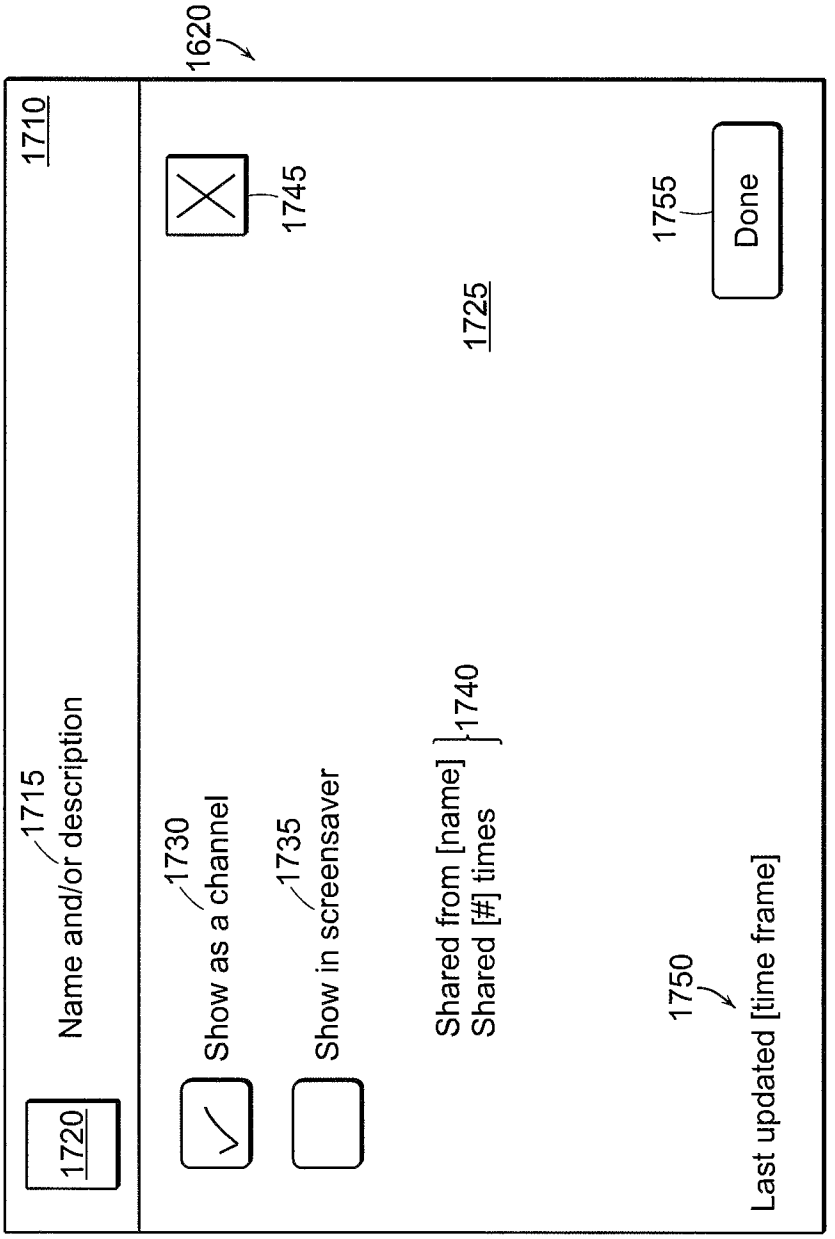
1620
1710
1720
1715
Name and/or description
1730
Show as a channel
1735
Show in screensaver
Shared from [name]
Shared [#] times
1740
1745
1725
1750
Last updated [time frame]
1755
Done

FIG. 17A

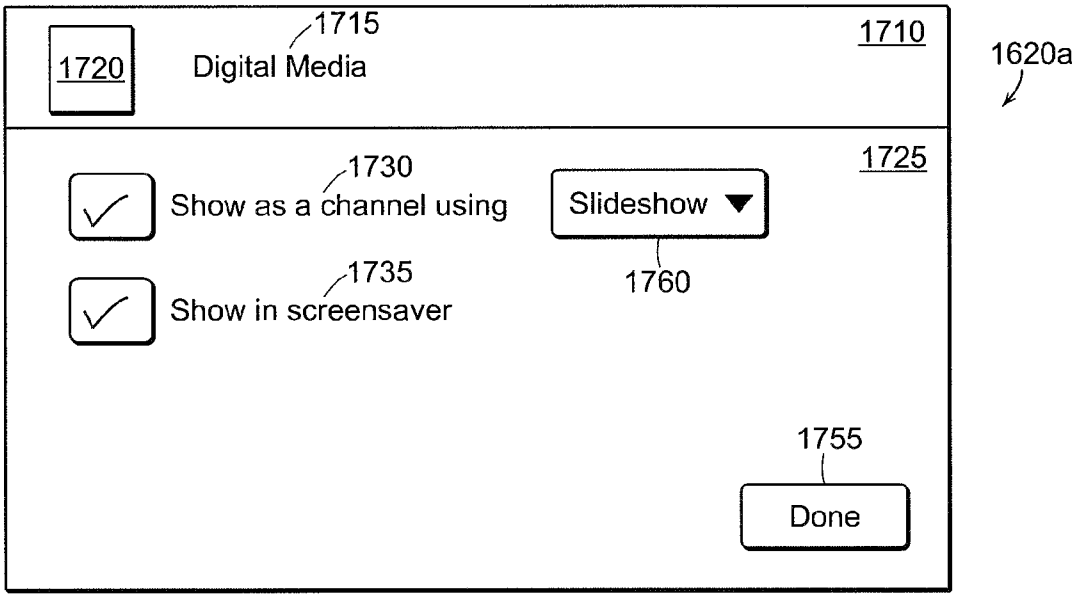
1720
1715
Digital Media
1710
1620a
1725
1730
Show as a channel using
Slideshow
1760
1735
Show in screensaver
1755
Done

FIG. 17B

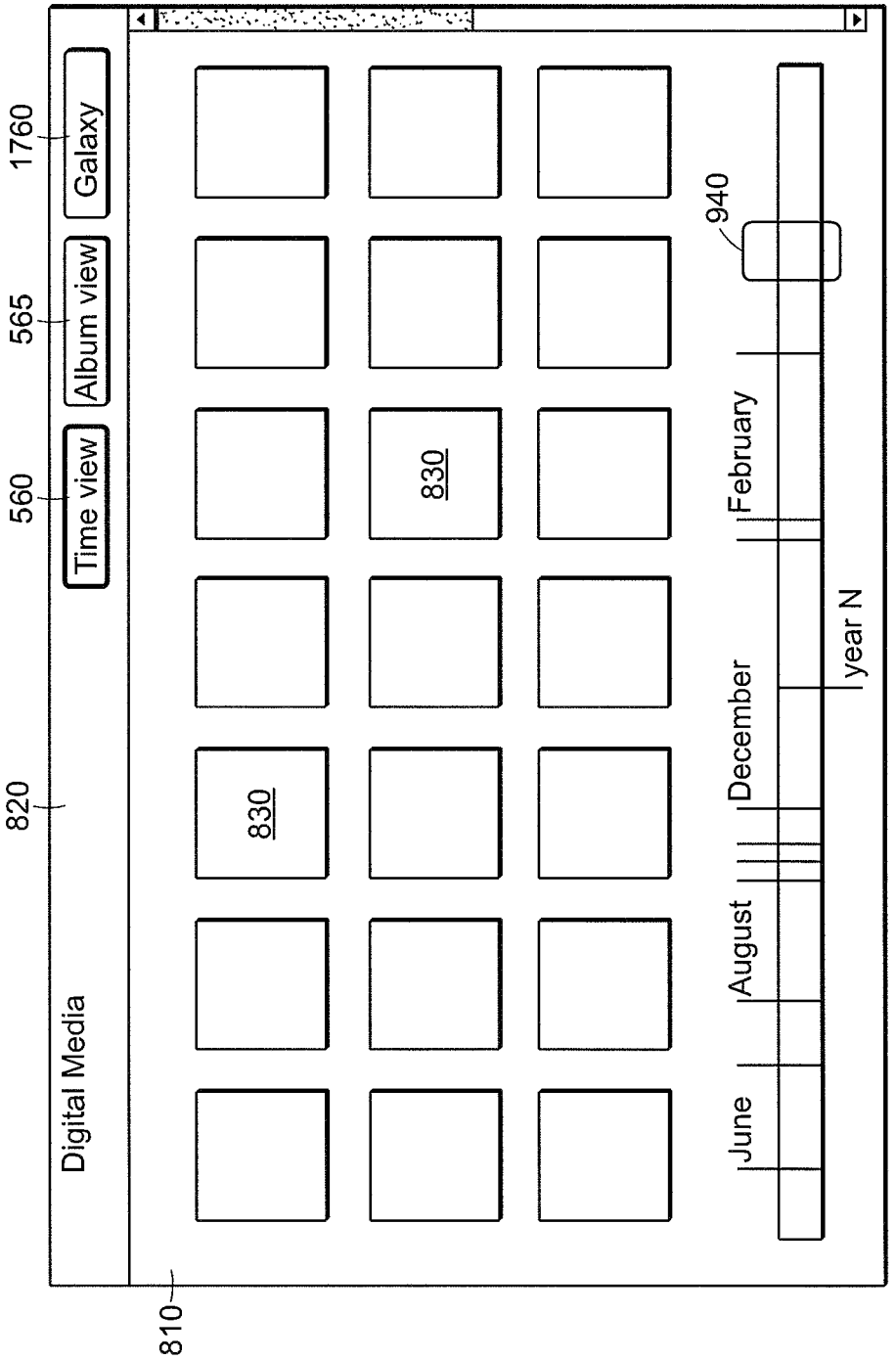
1760
Galaxy
565
Album view
560
Time view
820
Digital Media
830
830
940
June
August
December
February
year N
810

FIG. 18A

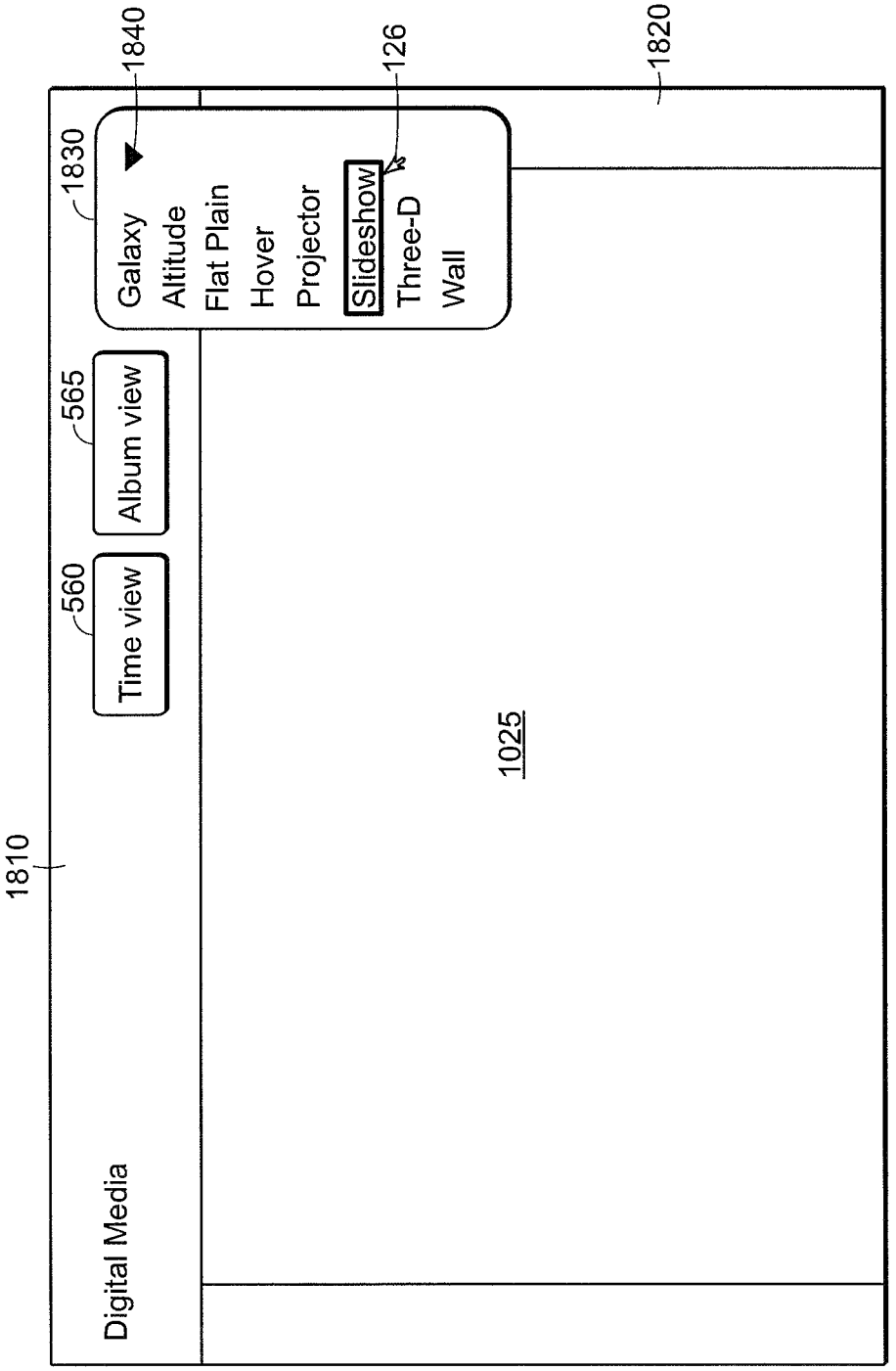
1810
Digital Media
560
Time view
565
Album view
1830
Galaxy
Altitude
Flat Plain
Hover
Projector
Slideshow
Three-D
Wall
1840
126
1820
1025

FIG. 18B

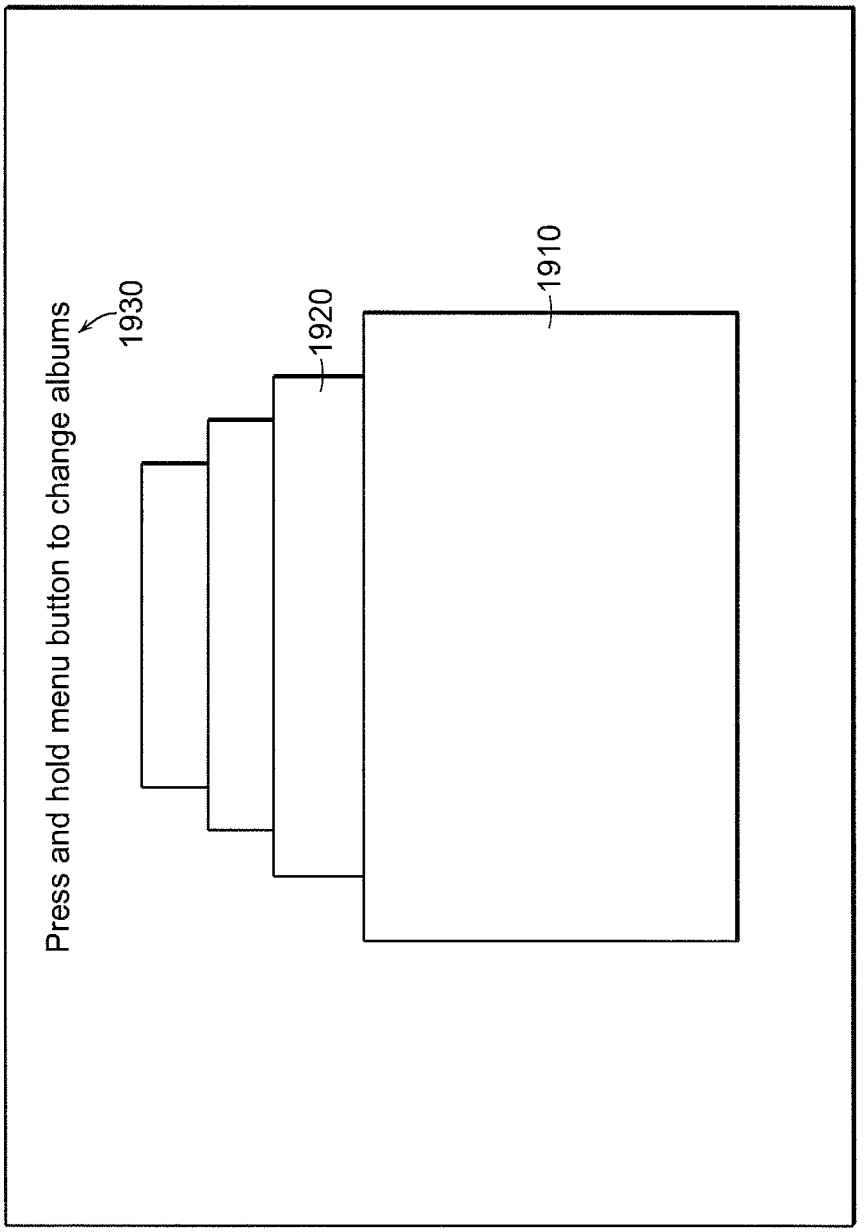

FIG. 19

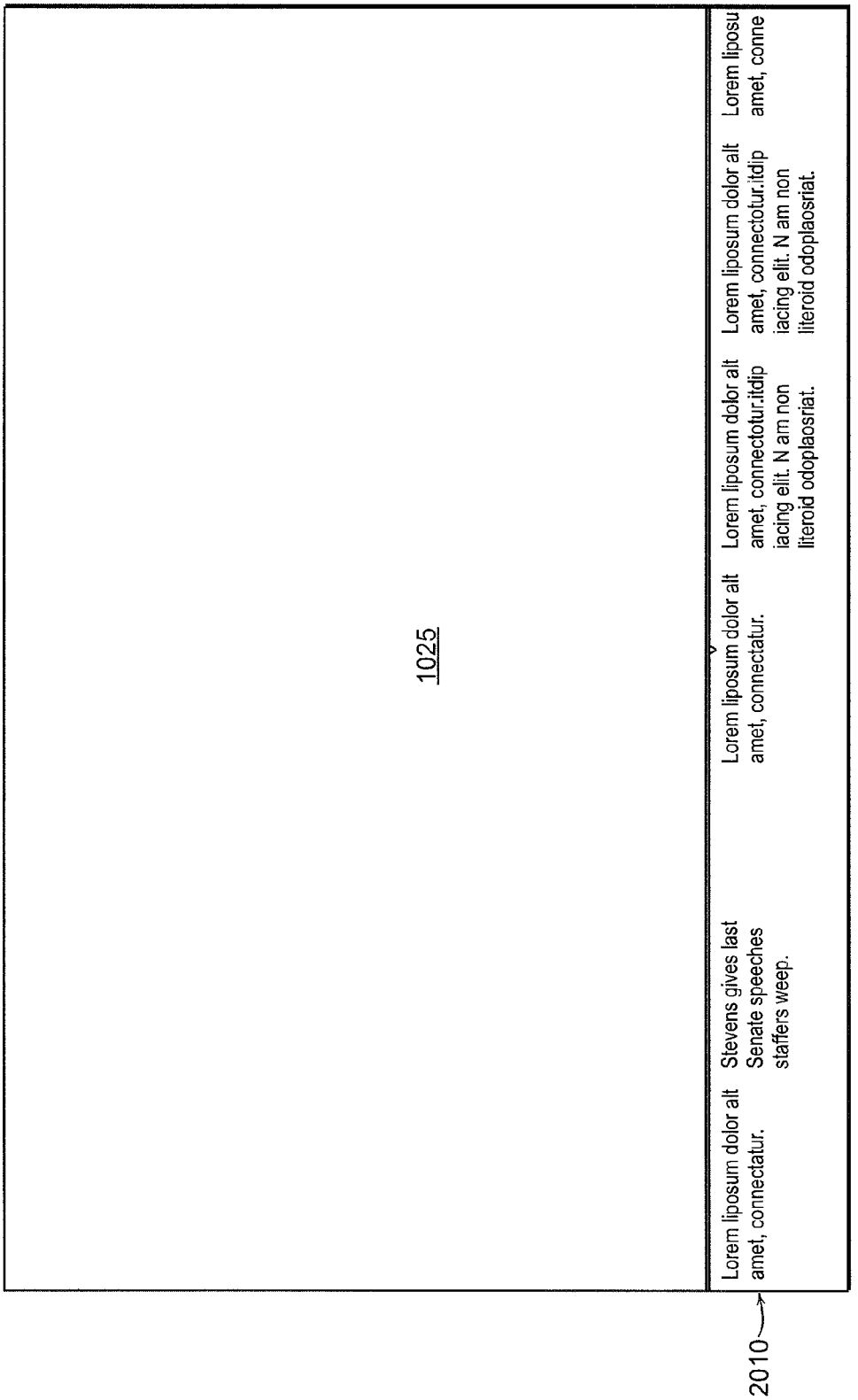
1025
2010
Lorem liposum dolor alt amet, connectatur.
Stevens gives last Senate speeches staffers weep.
Lorem liposum dolor alt amet, connectatur.
Lorem liposum dolor alt amet, connectotur.itdip iacing elit. N am non literoid odoplaosriat.
Lorem liposum dolor alt amet, connectotur.itdip iacing elit. N am non literoid odoplaosriat.
Lorem liposu amet, conne

FIG. 20A

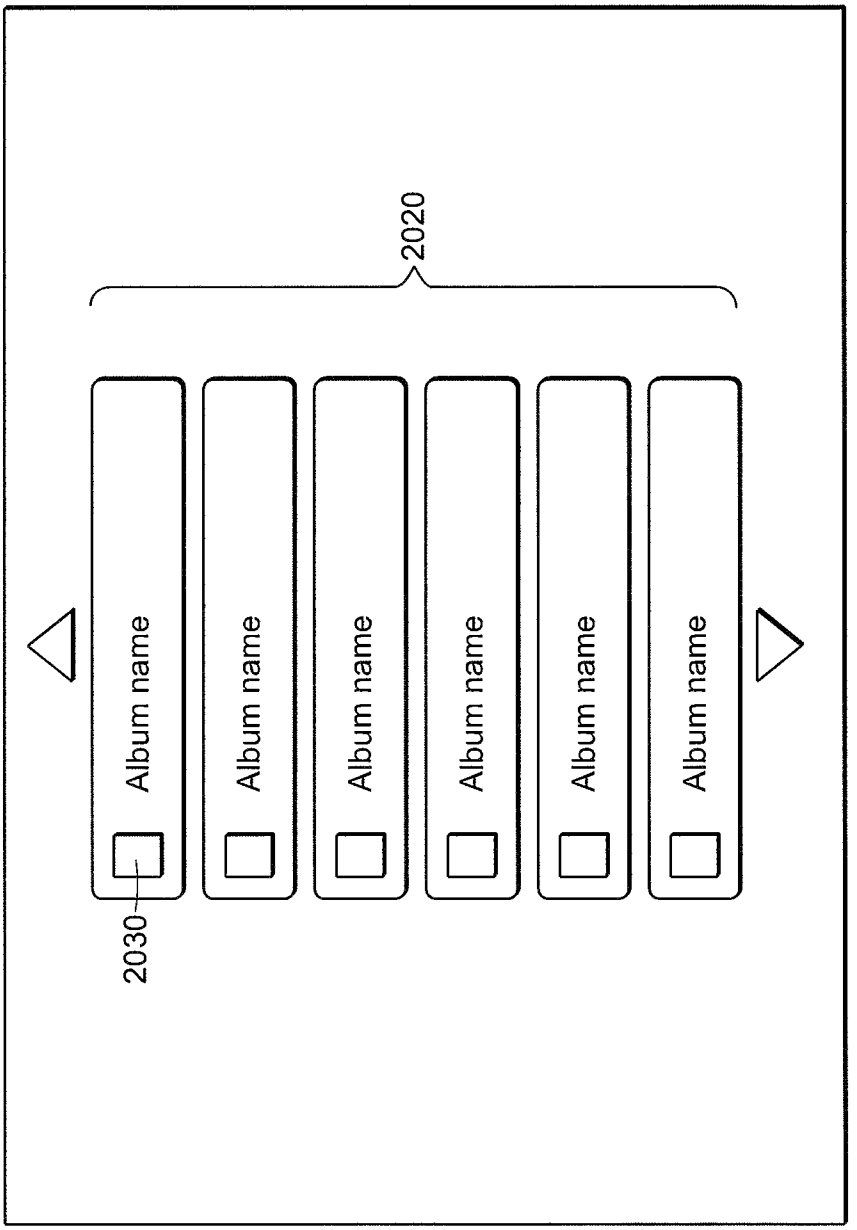
2020
Album name
Album name
Album name
Album name
Album name
Album name
2030

FIG. 20B

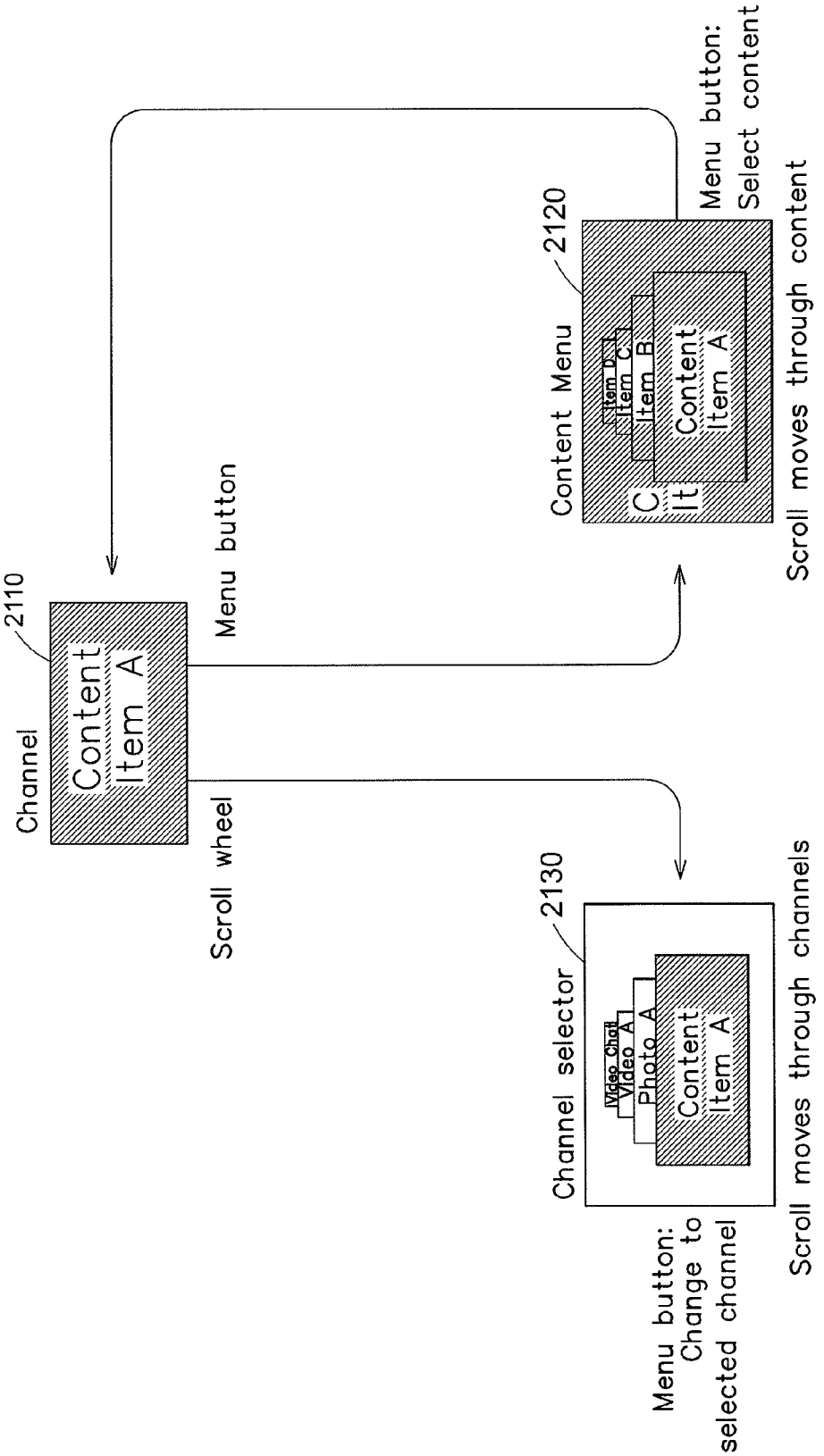
Channel
2110
Content
Item A
Menu button
Scroll wheel
Content Menu
2120
Item D
Item C
Item B
Content
Item A
Menu button:
Select content
Scroll moves through content
Channel selector
2130
Video Chat
Video A
Photo A
Content
Item A
Menu button:
Change to
selected channel
Scroll moves through channels

FIG. 21A

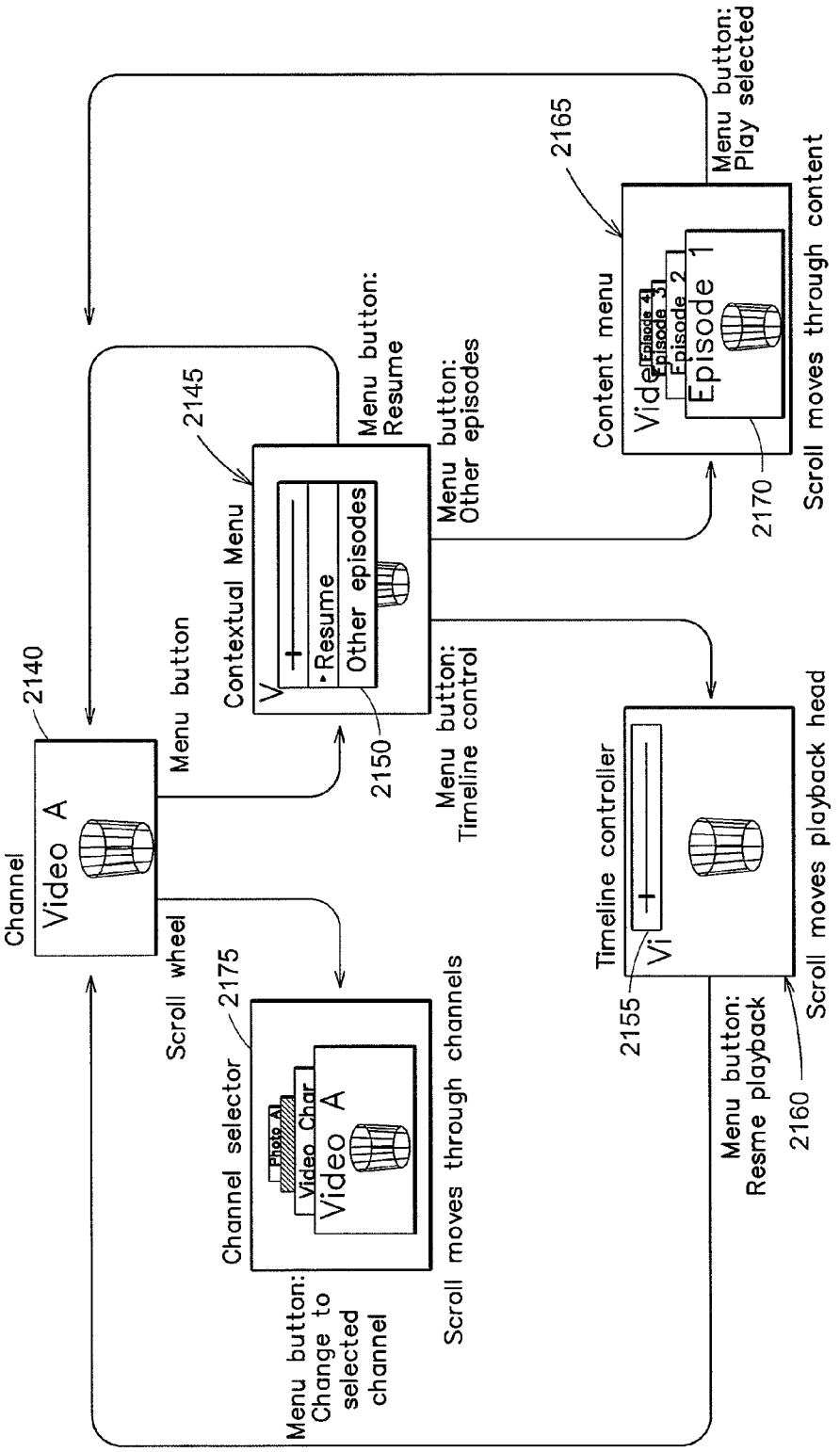
Channel
Video A
2140
Menu button
Scroll wheel
Contextual Menu
Resume
Other episodes
2145
2150
Menu button: Resume
Menu button: Other episodes
Menu button: Timeline control
Content menu
Episode 1
Episode 2
Episode 3
Episode 4
2165
2170
Menu button: Play selected
Scroll moves through content
Channel selector
Video A
Video Char
Photo A
2175
Menu button: Change to selected channel
Scroll moves through channels
Timeline controller
2155
Menu button: Resme playback
2160
Scroll moves playback head

FIG. 21B

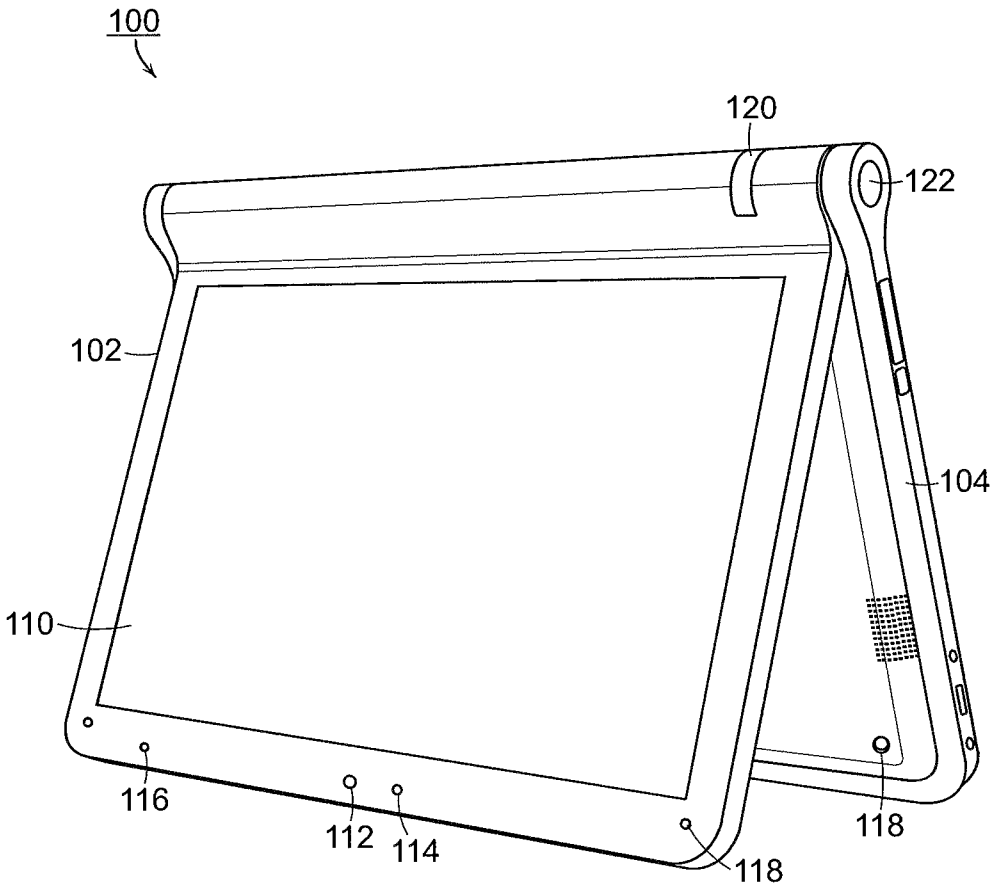

FIG. 22

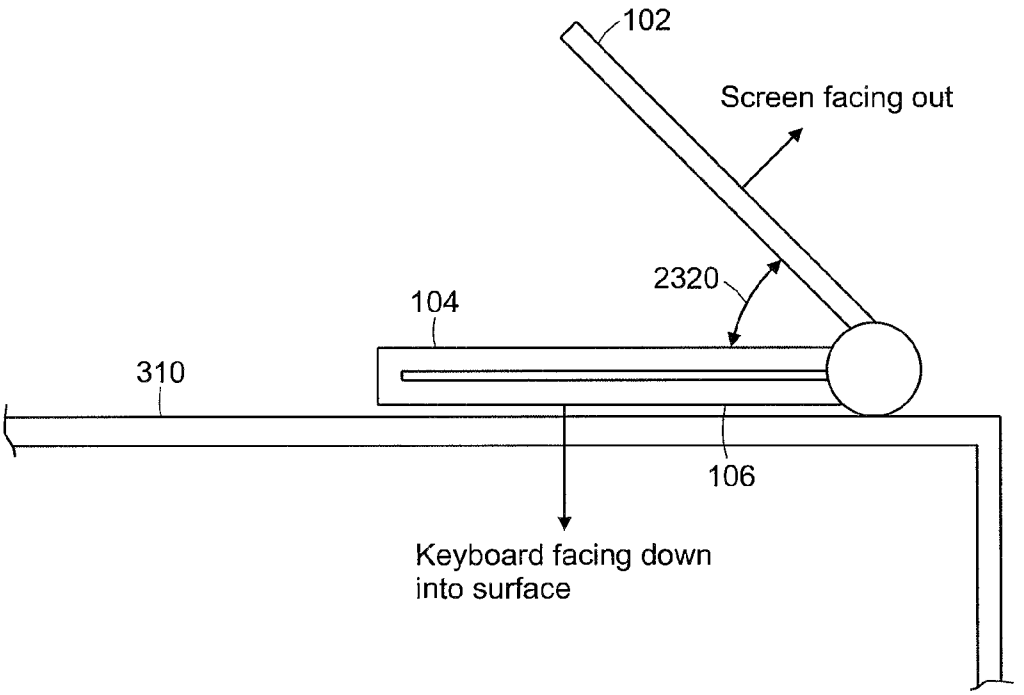
102
Screen facing out
2320
104
310
106
Keyboard facing down
into surface

FIG. 23

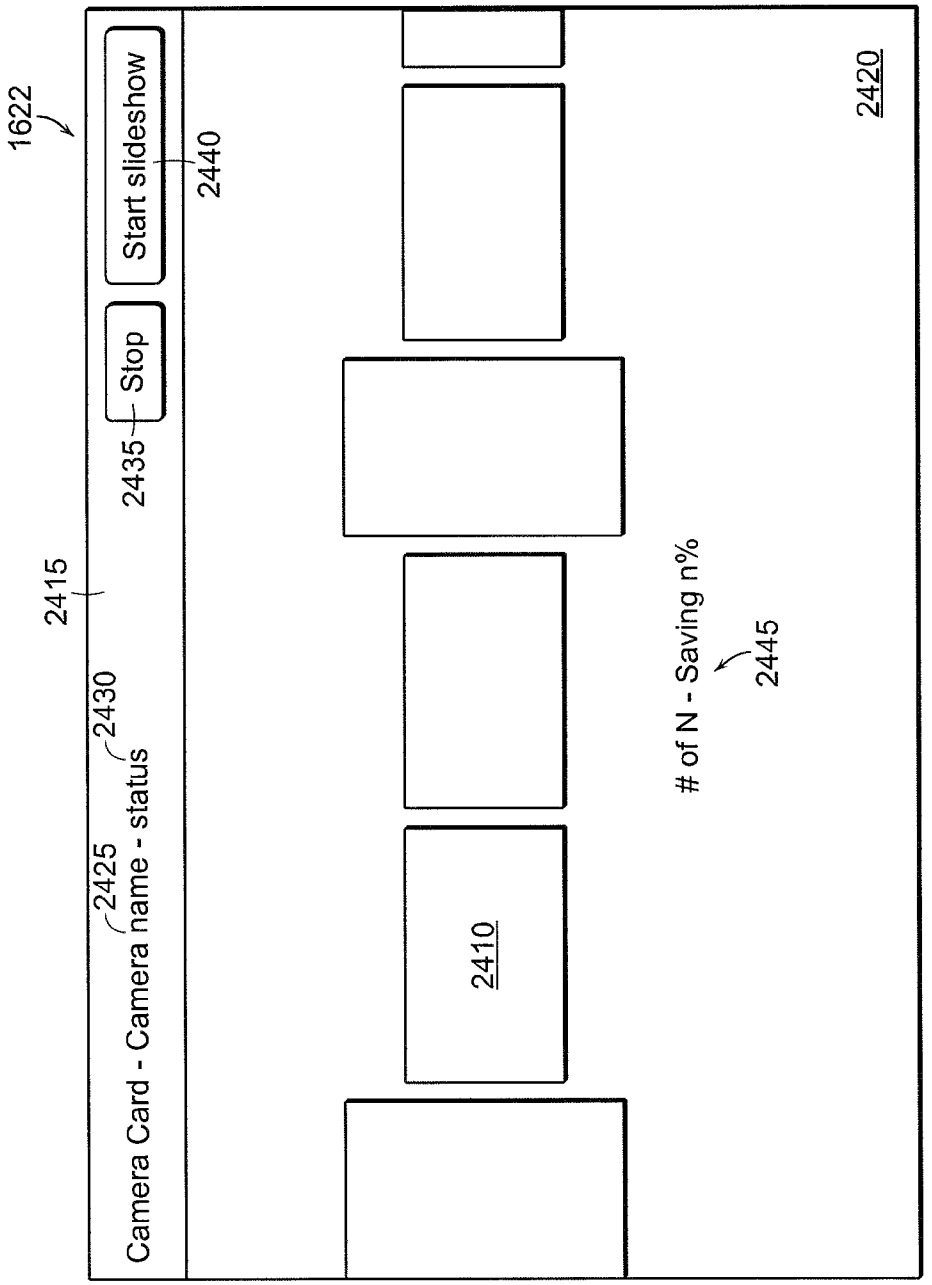
1622
Start slideshow
2440
Stop
2435
2415
2430
2425
Camera Card - Camera name - status
2410
# of N - Saving n%
2445
2420

FIG. 24

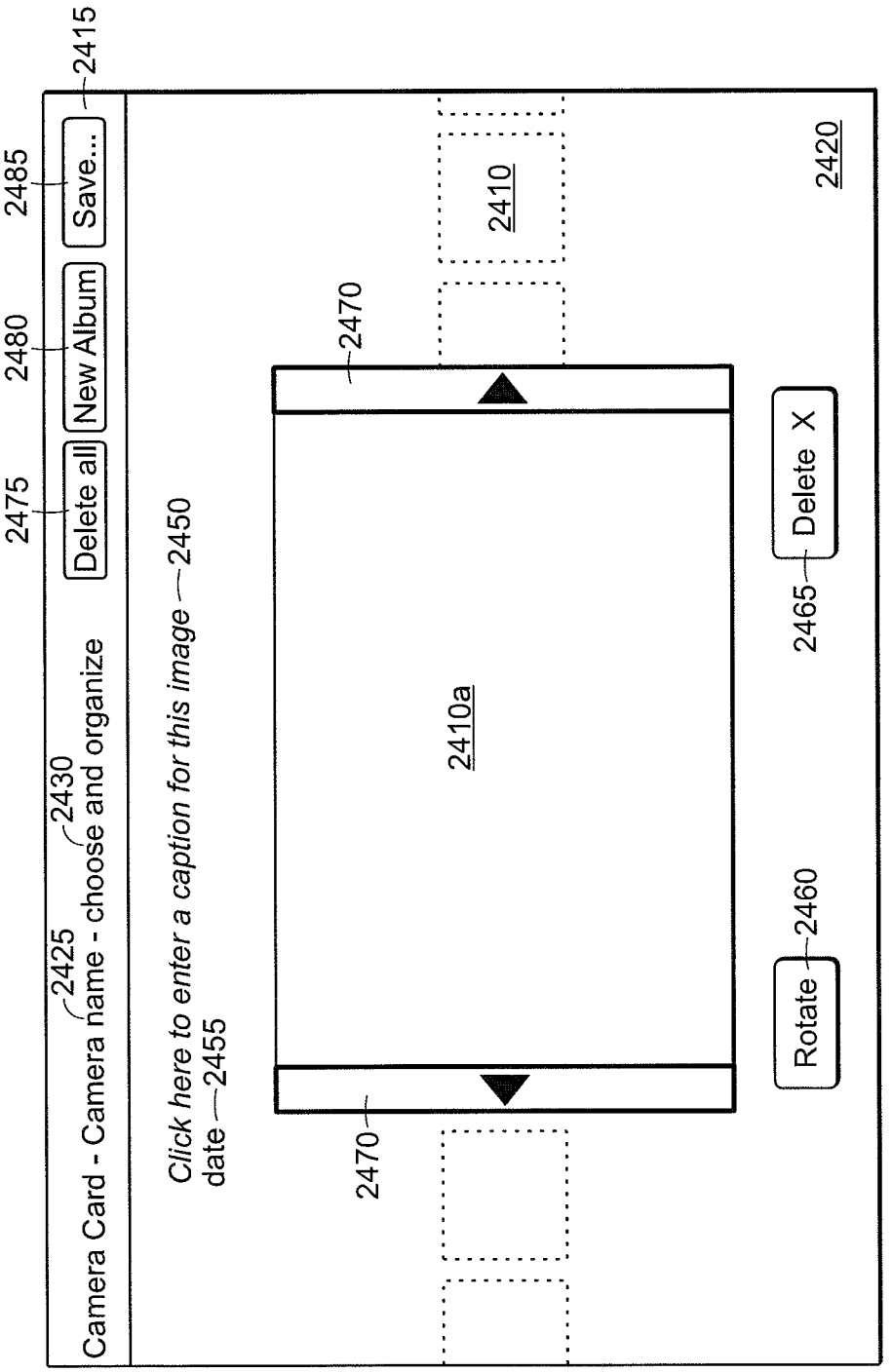
2415
2485
Save...
2480
New Album
2475
Delete all
Camera Card - Camera name - choose and organize
2425
2430
Click here to enter a caption for this image
date
2455
2450
2470
2410
2410a
2470
2420
Delete X
2465
Rotate
2460

FIG. 25

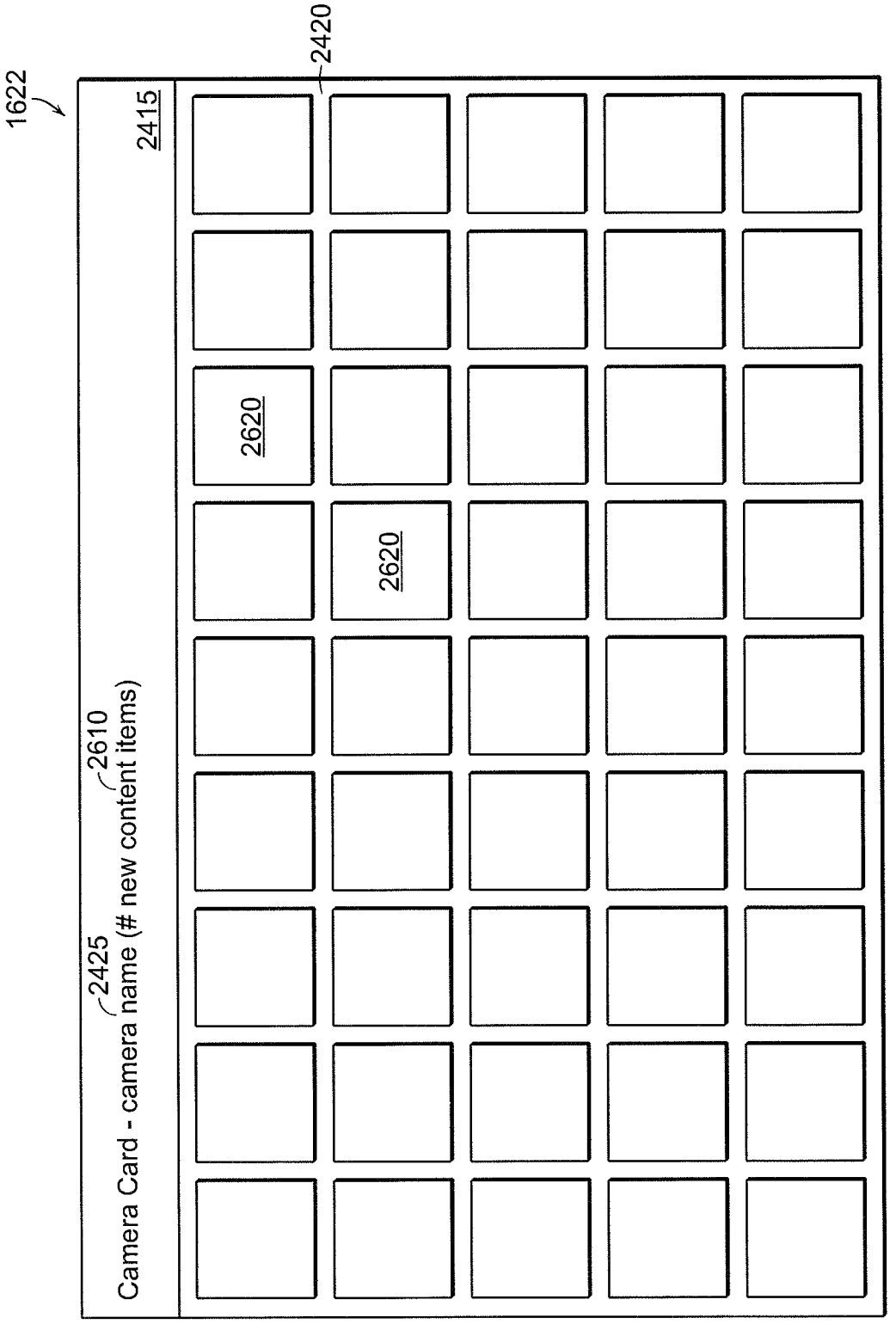
1622
2415
2420
2425
Camera Card - camera name (# new content items)
2610
2620
2620

FIG. 26

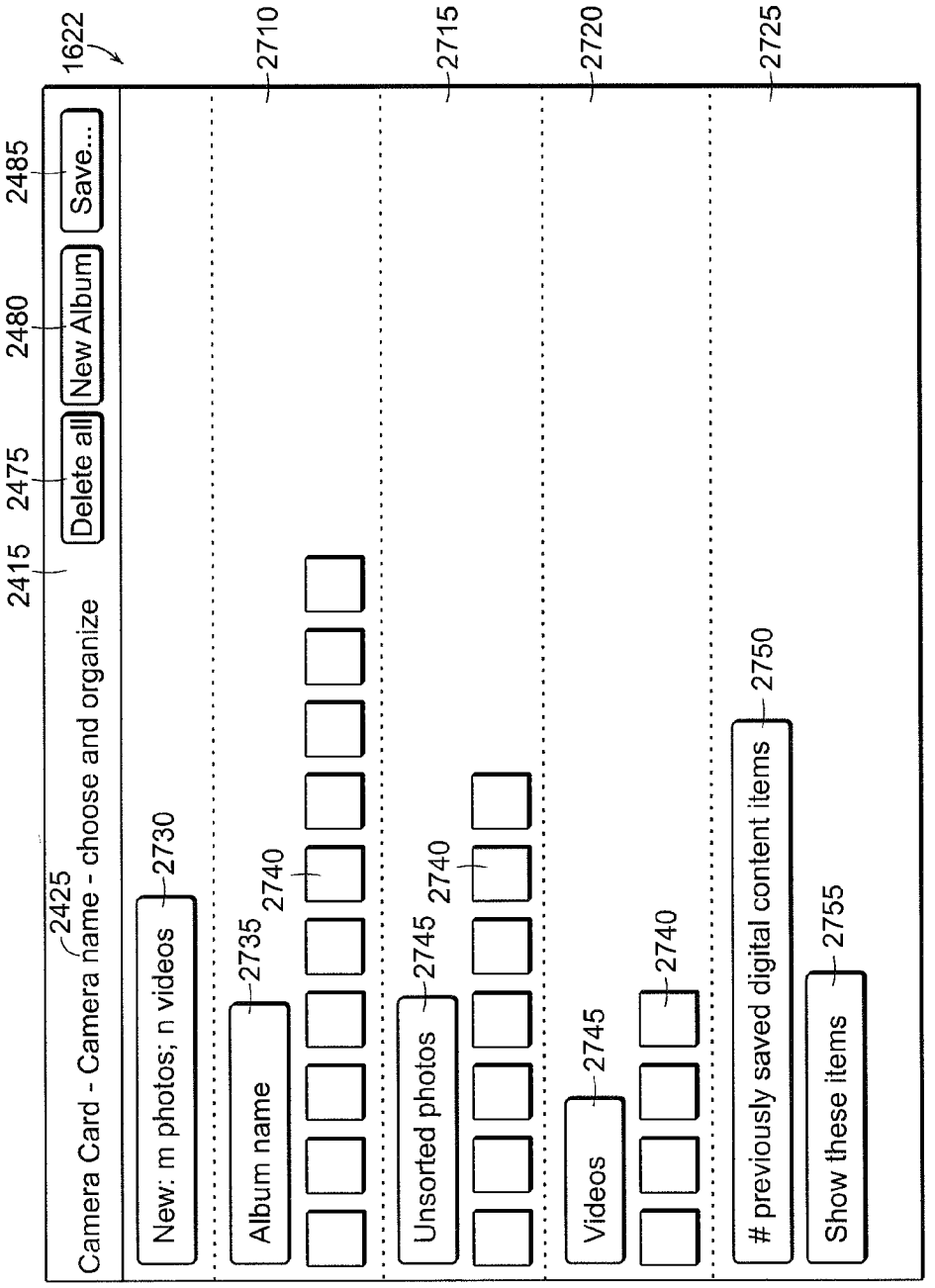
1622
2415
2425
Camera Card - Camera name - choose and organize
2475
Delete all
2480
New Album
2485
Save...
New: m photos; n videos
2730
2710
Album name
2735
2740
2715
Unsorted photos
2745
2740
2720
Videos
2745
2740
2725
previously saved digital content items
2750
Show these items
2755

FIG. 27

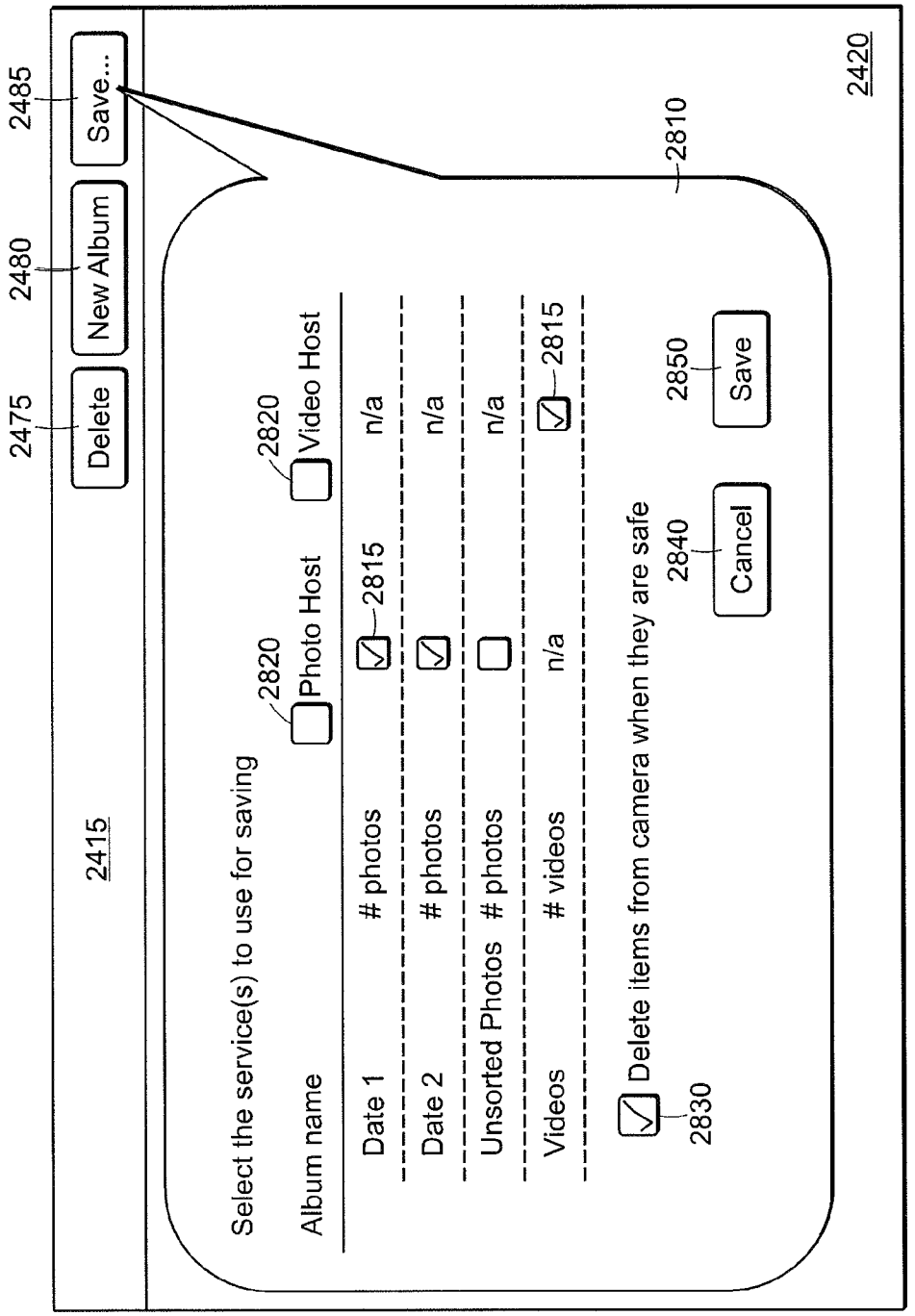
2415
2475
Delete
2480
New Album
2485
Save...
Select the service(s) to use for saving
Album name
2820
Photo Host
2820
Video Host
Date 1
photos
2815
n/a
Date 2
photos
n/a
Unsorted Photos
photos
n/a
Videos
videos
n/a
2815
Delete items from camera when they are safe
2830
2840
Cancel
2850
Save
2810
2420

FIG. 28

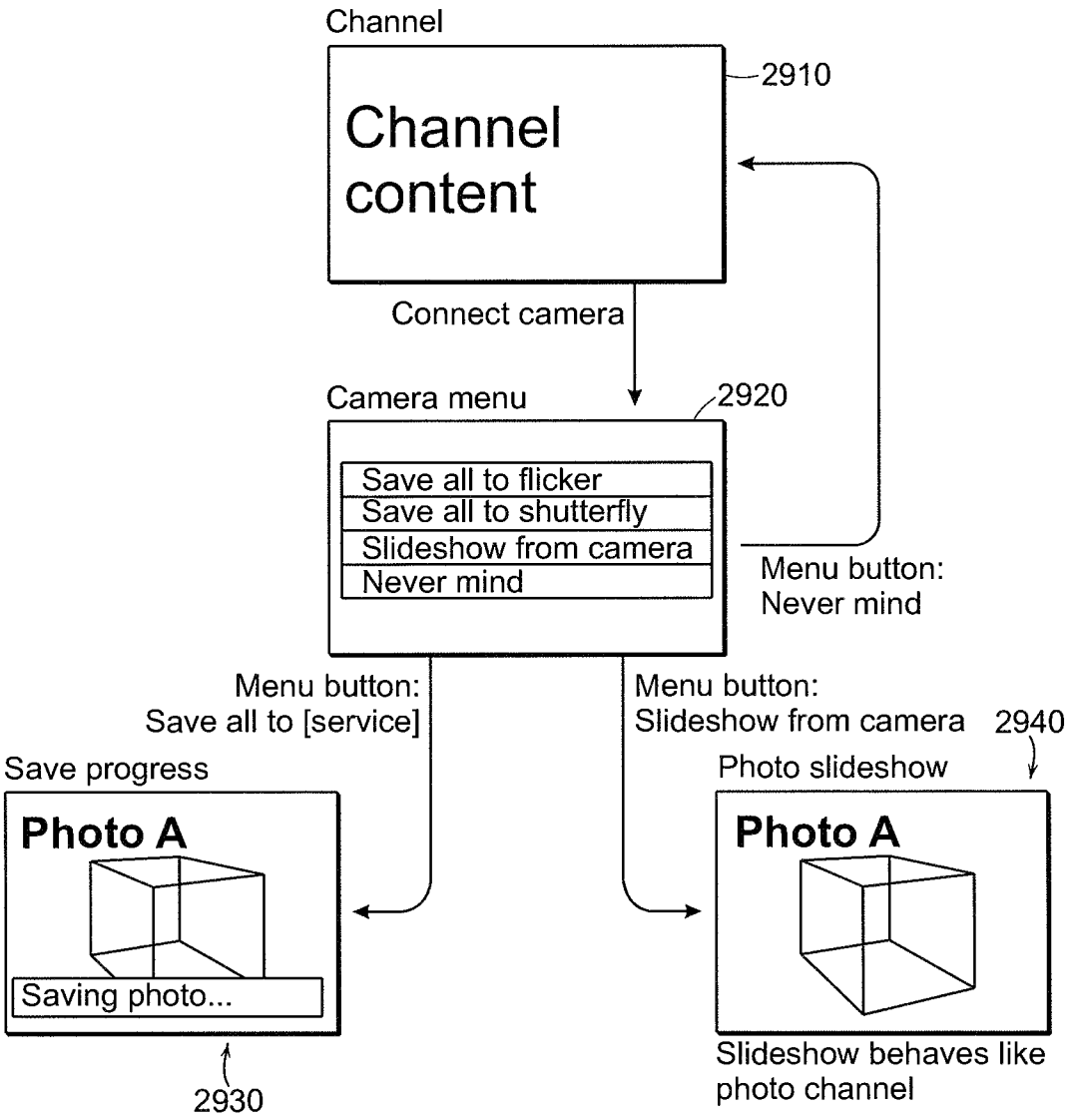
Channel
Channel content
2910
Connect camera
Camera menu
2920
Save all to flicker
Save all to shutterfly
Slideshow from camera
Never mind
Menu button:
Never mind
Menu button:
Save all to [service]
Menu button:
Slideshow from camera
2940
Save progress
Photo A
Saving photo...
2930
Photo slideshow
Photo A
Slideshow behaves like photo channel

FIG. 29

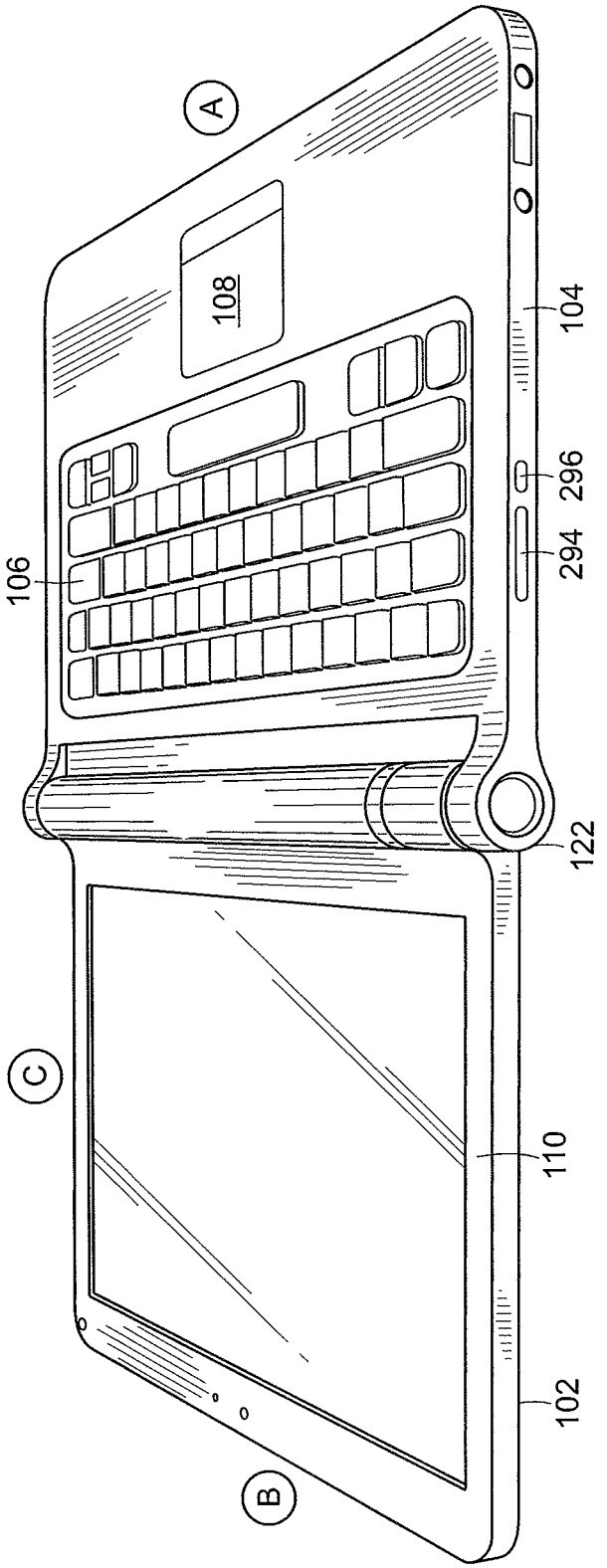

FIG. 30

METHOD AND APPARATUS FOR MANAGING DIGITAL MEDIA CONTENT

CROSS-REFERENCE TO RELATED APPLICATIONS

This application is a continuation-in-part of, and claims priority under 35 U.S.C. §120 to, U.S. patent application Ser. No. 12/170,951 entitled "PORTABLE COMPUTER WITH MULTIPLE DISPLAY CONFIGURATIONS," filed on Jul. 10, 2008; which claims priority under 35 U.S.C. §119(e) to U.S. Provisional Application Ser. No. 61/041,365, entitled "PORTABLE COMPUTER WITH MULTIPLE DISPLAY CONFIGURATIONS," filed Apr. 1, 2008, both of which are herein incorporated by reference in their entirety. Furthermore, this application is a continuation-in-part of, and claims priority under 35 U.S.C. §120 to U.S. patent application Ser. No. 12/170,939, entitled "PORTABLE COMPUTER WITH MULTIPLE DISPLAY CONFIGURATIONS," filed on Jul. 10, 2008; which claims priority under 35 U.S.C. 119(e) to U.S. Provisional Application Ser. No. 61/041,365, entitled "PORTABLE COMPUTER WITH MULTIPLE DISPLAY CONFIGURATIONS," filed Apr. 1, 2008, both of which applications are herein incorporated by reference in their entirety. Furthermore, this application is a continuation-in-part of, and claims priority under 35 U.S.C. §120 to U.S. patent application Ser. No. 12/416,479, filed on Apr. 1, 2009 and entitled "SYSTEM AND METHOD FOR STREAMLINING USER INTERACTION WITH ELECTRONIC CONTENT," which is a continuation-in-part of, and claims priority under 35 U.S.C. §120 to: U.S. patent application Ser. No. 12/170,951 entitled "PORTABLE COMPUTER WITH MULTIPLE DISPLAY CONFIGURATIONS," filed on Jul. 10, 2008, which claims priority under 35 U.S.C. §119(e) to U.S. Provisional Application Ser. No. 61/041,365, entitled "PORTABLE COMPUTER WITH MULTIPLE DISPLAY CONFIGURATIONS," filed Apr. 1, 2008; U.S. patent application Ser. No. 12/416,479 is also a continuation-in-part of, and claims priority under 35 U.S.C. §120 to U.S. patent application Ser. No. 12/170,939, entitled "PORTABLE COMPUTER WITH MULTIPLE DISPLAY CONFIGURATIONS," filed on Jul. 10, 2008, which claims priority under 35 U.S.C. §119(e) to U.S. Provisional Application Ser. No. 61/041,365, entitled "PORTABLE COMPUTER WITH MULTIPLE DISPLAY CONFIGURATIONS," filed Apr. 1, 2008; U.S. patent application Ser. No. 12/416,479 also claims priority under 35 U.S.C. 119(e) to U.S. Provisional Application Ser. No. 61/041,365, entitled "PORTABLE COMPUTER WITH MULTIPLE DISPLAY CONFIGURATIONS," filed Apr. 1, 2008, each of which applications are herein incorporated by reference in their entirety.

BACKGROUND

1. Field of Invention

The present invention is in the field of computer systems and, more particularly, is directed to methods and apparatus for managing computer-based digital media libraries.

2. Discussion of Related Art

Much of the advancement in contemporary computer systems and services stems from the significant increases in computing power. Hand in hand with those increases, enhanced features sets have developed designed to utilize that computing power. Conventional wisdom suggests that the more features that can be provided to a particular computer user, the better the user's experience will be. As computers have become more powerful and capable of providing more

and more features, however, ordinary/typical computer users have not been able to keep up with availability of features and services. Users may become frustrated by the inability to navigate the myriad (sometime unending) configurations and options provided in order to achieve something useful and/or workable to their ordinary use. Many users simply don't take advantage of provided features. Some outright ignore options and features that would simplify the use of their computer system; in some instances because the user lacks experience with new features and doesn't know the feature can be useful.

User frustration is felt not only with respect to the newer more powerful computer systems being offered today, but also frustration abounds with respect to their computer's interaction with the Internet. The present movement on the Internet, often referred to as Web 2.0, also subscribes to conventional thinking in that more and more features are being packed into each and every aspect of the web experience. Often, these on-line services provide very useful opportunities for the users who know how to take advantage of them—online photo management/sharing, online financial services, online marketplaces, online exchanges, web hosting, web development, dating services, social networking to name only a few. However, computer users often simply can't take advantage of all the functionality offered, either the services and features offered by their own computer, or the services and features offered by online providers. The complexity of the interface (both hardware and software) hampers adoption, as does the volume of features offered.

With the proliferation of digital cameras, digital music players and digital video players, more and more people are turning to digital audio and video media. For example, many people have replaced, or at least greatly supplemented, printed photograph albums with digital photos stored on their computer and/or using an online photo service. Similarly, many people use digitally stored music and videos rather than, or in addition to, traditional media such as records, compact discs, video cassettes, etc. However, due to the complexity and volume of digital photography features, services, etc., many users are not taking full advantage of the capabilities and services available to them.

SUMMARY OF INVENTION

Accordingly, aspects and embodiments are directed to methods and apparatus for managing digital media content that may provide a user-friendly, streamlined user experience.

Various aspects and embodiments are directed to a streamlined computer device and a graphical user interface that organizes interface elements into views of computer content for presentation to a user. Various views of digital media content permits users to easily and efficiently access various digital media content. Different views are used to provide an interface that is responsive to configurations of the device and responsive to activity being performed by the user. Aspects include permitting the user to maintain and manage digital media content libraries. According to some embodiments, the libraries comprise user digital media content and references digital media content. Functionality provided to a user can be tailored to the type of content displayed, accessed and/or managed. According to various aspects, methods and systems are provided for accessing and managing digital media libraries on a streamlined computing device with a plurality selectable I/O profiles. According to some embodiments, the methods may include displaying a GUI on a device, wherein the GUI comprises at least a plurality of views of digital media content, providing for transition between the plurality of views in response to selection of an I/O profile and in

response to activation of a view selector component by a user, executing an association with the at least one of the plurality of visual representations with digital media content in response to selection, transitioning a display on the computing device to a view of the digital media content, and providing for display of user digital media content and referenced digital media content in the view of the digital media content.

According to one aspect of the present invention, a method for accessing and managing digital media libraries on a streamlined computing device with a plurality selectable I/O profiles is provided. The method comprises displaying a graphical user interface on a computing device, wherein the graphical user interface comprises at least a plurality of views of digital media content, providing for transition between the plurality of views in response to selection of an I/O profile, providing for transition between the plurality of views in response to activation of a view selector component configured to permit a user to select one of the plurality of views, associating at least one of a plurality of visual representations with digital media content, executing the association with the at least one of the plurality of visual representations with digital media content in response to selection, transitioning a display on the computing device to a view of the digital media content in response to the act of executing the association, and providing for display of user digital media content and referenced digital media content in the view of the digital media content. According to one embodiment of the present invention, the method further comprises an act of displaying in the view user digital media content and referenced digital media content in response to the act of executing the association with the at least one of the plurality of visual representations. According to another embodiment of the invention, the act of displaying in the view user digital media content and referenced digital media content includes an act of accessing a reference to remote digital content not controlled by the user in order to display referenced digital content. According to another embodiment of the invention, the method further comprises an act of associating the at least one of the plurality of visual representations with a remote service provider. According to another embodiment of the invention, the method further comprises an act storing the association between the at least one visual representation with the remote service provider in at least one of a device profile and a user profile.

According to one embodiment of the present invention, the method further comprises acts of configuring access to a remote service, and integrating operations provided by the remote service provider into the view of the digital media content. According to another embodiment of the invention, the view comprises at least one of an album view and a timeline view. According to another embodiment of the invention, the method further comprises an act of displaying digital media content in a body portion of the view. According to another embodiment of the invention, the method further comprises an act of displaying a toggle element in a header portion of the view, wherein the toggle element transitions the computing device display between the album view and the timeline view upon selection by a user. According to another embodiment of the invention, the method further comprises acts of displaying emulation controls responsive to selection by the user, and emulating standard computer operations for referenced digital media content displayed in the view, wherein the act of emulating standard computer operations includes an act of determining if the user has authority to perform the standard computer operations, determining the user does not have the authority to perform the standard computer operation on a source of the referenced digital media content, and wherein the act of displaying the emulation controls occurs in response to the determination that the user does not have the authority. According to another embodiment of the invention, the standard computer operation includes an act of deleting digital media content, and the method further comprises an act of altering the view of the digital media content so the digital media content marked for deletion is not displayed within the view.

According to one embodiment of the present invention, the method further comprises an act of generating a state entry, associated with at least one of the view and the source of the referenced digital media content. According to another embodiment of the invention, the method further comprises acts of accessing any state entry for at least one of the view and the source of referenced digital media content, and displaying referenced digital media content according to any state entry requirement. According to another embodiment of the invention, the standard computer operation includes an act of editing referenced digital media content, and the method further comprises an act of generating a state entry reflecting any edits made to the referenced digital media content. According to another embodiment of the invention, the method further comprises acts of providing an aggregation component configured to permit the user to select a plurality of digital media content, displaying the plurality of digital media content in the body of the view, and permitting the user to perform operations on the plurality of digital media content. According to another embodiment of the invention, the act of permitting the user to perform operations on the plurality of digital media content includes at least one of a share operation, a create channel operation, and an order prints operation. According to another embodiment of the invention the at least one operation is a share operation, and the method further comprises acts of identifying any state entries for the plurality of digital media content, identifying any remote service settings for the plurality of digital media content, and transmitting a visual representation associated with the plurality of digital media content, any state settings, and any remote service settings to another streamlined device user.

According to one embodiment of the present invention, the method further comprising acts of permitting the user to share the at least one visual representation, including any associated digital media content with another user, storing shared information in response to an act of sharing by the user, and updating any associated digital media automatically for the another user, wherein the act of updating any associated digital media includes acts of identifying any changes in shared digital media content, wherein changes include at least one of addition of digital media content associated with the at least one visual representation, deletion of digital media content associated with the at least one visual representation, edits of digital media content associated with the at least one visual representation, and updates of information associated with digital media content associated with the at least one visual representation. According to another embodiment of the invention, the method further comprising acts of permitting the user to share the at least one visual representation, including any associated digital media content with another user, transmitting the at least one visual representation associated with the digital media content, any state settings, and any remote service settings to another streamlined device user. According to another embodiment of the invention, the method further comprises an act of permitting the user to update date information associated with the digital media content. According to another embodiment of the invention, the method further comprises acts of generating an offset for

the updated date information associated with the digital media content, and applying the offset to similar digital media content.

According to one embodiment of the present invention, the view is a time view and the method further comprises displaying a timeline navigation control in the body of the view, wherein the timeline navigation control is configured to provide organization segments, the organization segments providing a visual indication of a number of digital media content items in each segment. According to another embodiment of the invention, the timeline navigation control further comprises a handle responsive to a pointer displayed on the computer device, wherein the handle is further responsive to select and drag operations. According to another embodiment of the invention, the act of displaying the user interface includes providing a plurality of views of the plurality of visual representations of computer content, and associating the plurality of visual representations of computer content with at least one of the plurality of views, and wherein the each of the plurality of visual representations is responsive to focus and execution, wherein execution includes selection of the visual representation. According to another embodiment of the invention, the act of providing for transition between the plurality of views in response to selection of an I/O profile includes permitting the user to rotate a display element about a longitudinal axis running along an interface between the display component and a base of the streamlined computing device, wherein rotating the display component about the longitudinal axis up to approximately 180 degrees from the closed mode configures the portable computer into a laptop mode with one of the plurality of views as a default display, and wherein rotating the display component about the longitudinal axis beyond approximately 180 degrees from the closed mode configures the portable computer into an easel mode with another one of the plurality of views as a default display.

According to one aspect of the present invention, a computer-readable medium having computer-readable instructions stored thereon that as a result of being executed by a computer, instruct the computer to perform the method for accessing and managing digital media libraries on a streamlined computing device with a plurality selectable I/O profiles, wherein the method comprises displaying a graphical user interface on a computing device, wherein the graphical user interface comprises at least a plurality of views of digital media content, providing for transition between the plurality of views in response to selection of an I/O profile, providing for transition between the plurality of views in response to activation of a view selector component configured to permit a user to select one of the plurality of views, associating at least one of a plurality of visual representations with digital media content, executing the association with the at least one of the plurality of visual representations with digital media content in response to selection, transitioning a display on the computing device to a view of the digital media content in response to the act of executing the association, and providing for display of user digital media content and referenced digital media content in the view of the digital media content. According to another embodiment of the invention, the method further comprises an act of displaying in the view user digital media content and referenced digital media content in response to the act of executing the association with the at least one of the plurality of visual representations. According to another embodiment of the invention, the act of displaying in the view user digital media content and referenced digital media content includes an act of accessing a reference to remote digital content not controlled by the user in order to display referenced digital content.

According to one embodiment of the present invention, the method further comprises an act of associating the at least one of the plurality of visual representations with a remote service provider. According to another embodiment of the invention, the method further comprises an act storing the association between the at least one visual representation with the remote service provider in at least one of a device profile and a user profile. According to another embodiment of the invention, the method further comprises acts of configuring access to a remote service, and integrating operations provided by the remote service provider into the view of the digital media content. According to another embodiment of the invention, the view comprises at least one of an album view and a timeline view. According to another embodiment of the invention, the method further comprises an act of displaying digital media content in a body portion of the view. According to another embodiment of the invention, the method further comprises an act of displaying a toggle element in a header portion of the view, wherein the toggle element transitions the computing device display between the album view and the timeline view upon selection by a user. According to another embodiment of the invention, the method further comprises acts of displaying emulation controls responsive to selection by the user, and emulating standard computer operations for referenced digital media content displayed in the view, wherein the act of emulating standard computer operations includes an act of determining if the user has authority to perform the standard computer operations, determining the user does not have the authority to perform the standard computer operation on a source of the referenced digital media content, and wherein the act of displaying the emulation controls occurs in response to the determination that the user does not have the authority.

According to one embodiment of the invention, the standard computer operation includes an act of deleting digital media content, and the method further comprises an act of altering the view of the digital media content so the digital media content marked for deletion is not displayed within the view. According to another embodiment of the invention, the method further comprises an act of generating a state entry, associated with at least one of the view and the source of the referenced digital media content. According to another embodiment of the invention, the method further comprises an acts of accessing any state entry for at least one of the view and the source of referenced digital media content, and displaying referenced digital media content according to any state entry requirement. According to another embodiment of the invention, the standard computer operation includes an act of editing referenced digital media content, and the method further comprises an act of generating a state entry reflecting any edits made to the referenced digital media content. According to another embodiment of the invention, the method further comprises acts of providing an aggregation component configured to permit the user to select a plurality of digital media content, displaying the plurality of digital media content in the body of the view, and permitting the user to perform operations on the plurality of digital media content. According to another embodiment of the invention, the act of permitting the user to perform operations on the plurality of digital media content includes at least one of a share operation, a create channel operation, and an order prints operation. According to another embodiment of the invention, the at least one operation is a share operation, and the method further comprises acts of identifying any state entries for the plurality of digital media content, identifying any

remote service settings for the plurality of digital media content, and transmitting a visual representation associated with the plurality of digital media content, any state settings, and any remote service settings to another streamlined device user.

According to one embodiment of the present invention, the method further comprises acts of permitting the user to share the at least one visual representation, including any associated digital media content with another user, storing shared information in response to an act of sharing by the user, and updating any associated digital media automatically for the another user, wherein the act of updating any associated digital media includes acts of identifying any changes in shared digital media content, wherein changes include at least one of addition of digital media content associated with the at least one visual representation, deletion of digital media content associated with the at least one visual representation, edits of digital media content associated with the at least one visual representation, and updates of information associated with digital media content associated with the at least one visual representation. According to another embodiment of the invention, the method further comprises acts of permitting the user to share the at least one visual representation, including any associated digital media content with another user, transmitting the at least one visual representation associated with the digital media content, any state settings, and any remote service settings to another streamlined device user. According to another embodiment of the invention, the method further comprises an act of permitting the user to update date information associated with the digital media content. According to another embodiment of the invention, the method further comprises an acts of generating an offset for the updated date information associated with the digital media content, and applying the offset to similar digital media content.

According to one embodiment of the present invention, the view is a time view and the method further comprises displaying a timeline navigation control in the body of the view, wherein the timeline navigation control is configured to provide organization segments, the organization segments providing a visual indication of a number of digital media content items in each segment. According to another embodiment of the invention, the timeline navigation control further comprises a handle responsive to a pointer displayed on the computer device, wherein the handle is further responsive to select and drag operations. According to another embodiment of the invention, the act of displaying the user interface includes providing a plurality of views of the plurality of visual representations of computer content, and associating the plurality of visual representations of computer content with at least one of the plurality of views, and wherein the each of the plurality of visual representations is responsive to focus and execution, wherein execution includes selection of the visual representation. According to another embodiment of the invention, the act of providing for transition between the plurality of views in response to selection of an I/O profile includes permitting the user to rotate a display element about a longitudinal axis running along an interface between the display component and a base of the streamlined computing device wherein rotating the display component about the longitudinal axis up to approximately 180 degrees from the closed mode configures the portable computer into a laptop mode with one of the plurality of views as a default display, and wherein rotating the display component about the longitudinal axis beyond approximately 180 degrees from the closed mode configures the portable computer into an easel mode with another one of the plurality of views as a default display.

According to one aspect of the present invention, a system for accessing and managing digital media libraries with a plurality selectable I/O profiles is provided. The system comprises a display component configured to display a graphical user interface, wherein the graphical user interface comprises at least a plurality of views of digital media content, wherein the plurality of views include at least one of a plurality of visual representations, an execution component configured to transition the graphical user interface between the plurality of views in response to selection of an I/O profile, a view selector component configured to transition between the plurality of views in response to activation, a storage component configured to store an association between at least one of a plurality of visual representations and digital media content, wherein the execution component is further configured to execute the association with the at least one of the plurality of visual representations with digital media content in response to selection and transition the display to a view of the digital media content in response to the act of executing the association, and wherein the display component is configured to display user digital media content and referenced digital media content in the view of the digital media content. According to one embodiment of the present invention, the display component is further configured to display in the view user digital media content and referenced digital media content in response to the act of execution of the association with the at least one of the plurality of visual representations. According to another embodiment of the invention, the execution component is further configured access a reference to remote digital content not controlled by the user in order to permit display of referenced digital content. According to another embodiment of the invention, the storage component further comprises an association between the at least one of the plurality of visual representations and a remote service provider. According to another embodiment of the invention, the storage component includes the association in at least one of a device profile and a user profile. According to another embodiment of the invention, the storage component is further configured to store access information for a remote service and wherein the execution component if further configured to integrate operations provided by the remote service provider into the view of the digital media content.

According to one embodiment of the present invention, the view comprises at least one of an album view and a timeline view. According to another embodiment of the invention, the display component is further configured to display digital media content in a body portion of the view. According to another embodiment of the invention, the display component is further configured to display a toggle element in a header portion of the view, wherein the toggle element transitions the computing device display between the album view and the timeline view upon selection by a user. According to another embodiment of the invention, the execution component is further configured determine if the user has authority to perform a set of standard computer operations, and wherein the displaying component is further configured to display emulation controls configured to emulate the set of standard computer operations upon a determination that the user does not have the authority to perform the set of standard operations. According to another embodiment of the invention, the standard computer operation includes an act of deleting digital media content, and the method further comprises an act of altering the view of the digital media content so the digital media content marked for deletion is not displayed within the view. According to another embodiment of the invention, the storage component is further configured to store a state entry associated with at least one of the view and the source of the

referenced digital media content. According to another embodiment of the invention, the execution component is further configured to access any state entry for at least one of the view and the source of referenced digital media content, and wherein the display component is configured to display referenced digital media content according to any state entry requirement. According to another embodiment of the invention, the standard computer operation includes an editing operation for referenced digital media content, and the storage component is further configured to store a state entry reflecting any edits made to the referenced digital media content. According to another embodiment of the invention, the display component is further configured to display an aggregation element configured to permit the user to select a plurality of digital media content, display the plurality of digital media content in the body of the view, and permit the user to perform operations on the plurality of digital media content.

According to one embodiment of the present invention, the display component is further configured to permit at least one of a share operation, a create channel operation, and an order prints operation. According to another embodiment of the invention, the execution component is further configured to identify any state entries for the plurality of digital media content, identifying any remote service settings for the plurality of digital media content, and transmit a visual representation associated with the plurality of digital media content, any state settings, and any remote service settings to another streamlined device user. According to another embodiment of the invention, the system further comprises a share component configured to permit the user to share the at least one visual representation, including any associated digital media content with another user, and an update component update any digital media associated with the shared at least one visual representation automatically for the another user. According to another embodiment of the invention, the execution component is further configured to transmit at least one visual representation associated with the digital media content, any state settings, and any remote service settings to another streamlined device user. According to another embodiment of the invention, the execution component is further configured to permit the user to update date information associated with the digital media content. According to another embodiment of the invention, the execution component is further configured to generate an offset for the updated date information associated with the digital media content, and apply the offset to similar digital media content. According to another embodiment of the invention, the view is a time view and the display component is further configured to display a timeline navigation control in the body of the view, wherein the timeline navigation control is configured to provide organization segments, the organization segments providing a visual indication of a number of digital media content items in each segment. According to another embodiment of the invention, the timeline navigation control further comprises a handle responsive to a pointer displayed on the computer device, wherein the handle is further responsive to select and drag operations.

According to one embodiment of the present invention, the display component is further configured to provide a plurality of views of the plurality of visual representations of computer content and the storage components is configured to store an association between the plurality of visual representations of computer content and at least one of the plurality of views, wherein the each of the plurality of visual representations is responsive to focus and execution, and wherein execution includes selection of the visual representation. According to another embodiment of the invention, the system comprises a portable computer system and the portable computer system further comprises a display component including a display screen, a base, a hinge assembly at least partially housed within the base and configured to pivotably couple the display component to the base, wherein the display component is rotatable about a longitudinal axis running along an interface between the display component and the base, wherein, in the closed mode, the display screen is disposed substantially against the base, wherein rotating the display component about the longitudinal axis up to approximately 180 degrees from the closed mode configures the portable computer into the laptop mode, and wherein rotating the display component about the longitudinal axis beyond approximately 180 degrees from the closed mode configures the portable computer into the easel mode. According to another embodiment of the invention, the single axis is a longitudinal axis running along an interface between the display component and the base; and wherein the display component is rotatable about the longitudinal axis. According to another embodiment of the invention, the system further comprises a display orientation module configured to control an orientation of the content displayed on the display screen, wherein the orientation of the content displayed on the display screen is configurable among a plurality of orientations relative to the longitudinal axis.

According to one embodiment of the present invention, the plurality of orientations comprises a first orientation relative to the longitudinal axis and a second orientation relative to the longitudinal axis, and wherein when display orientation module is configured to automatically display the content in the first orientation when the portable computer is configured into the laptop mode and in the second orientation when the portable computer is configured into the easel mode. According to another embodiment of the invention, the plurality of display modes further comprises a flat mode in which the display component is disposed at an angle of approximately 180 degrees, measured about the longitudinal axis, relative to the base. According to another embodiment of the invention, the plurality of orientations comprises a first orientation relative to the longitudinal axis, a second orientation relative to the longitudinal axis, and a third orientation relative to the longitudinal axis, and wherein, in the flat mode, the orientation of the content displayed on the display screen is configurable among the first, second and third orientations responsive to a user input. According to another embodiment of the invention, the second orientation is 90 degrees relative to the first orientation, and wherein the third orientation is 180 degrees relative to the first orientation. According to another embodiment of the invention, the system further comprises a mode sensor configured to detect a degree of rotation of the display component relative to the base and to provide information representative of the degree of rotation, and wherein the display orientation module is configured to automatically adjust the orientation of the content displayed on the display screen responsive to the information from the mode sensor.

According to one embodiment of the invention, the display orientation module is configured to automatically display the content in a first orientation relative to the longitudinal axis responsive to the information indicating that the degree of rotation of the display component is less than approximately 180 degrees relative to the base, and automatically display the content in a second orientation relative to the longitudinal axis responsive to the information indicating that the degree of rotation of the display component is greater than approximately 180 degrees relative to the base, wherein the second orientation is at approximately 180 degrees relative to the first

orientation. According to another embodiment of the invention, the system further comprises a mode sensor configured to detect a current display mode of the portable computer; and wherein the display orientation module selects the orientation of the content displayed on the display screen from one of the plurality of orientations relative to the longitudinal axis responsive to the current display mode detected by the mode sensor. According to another embodiment of the invention, wherein the plurality of display modes further comprises a closed mode, and wherein, in the closed mode, the display screen is disposed substantially against the base. According to another embodiment of the invention, rotating the display component about the longitudinal axis up to approximately 180 degrees from the closed mode configures the portable computer into the laptop model, and wherein rotating the display component about the longitudinal axis beyond approximately 180 degrees from the closed mode configures the portable computer into the easel mode.

According to one embodiment of the present invention, the display component is rotatable about the longitudinal axis up to approximately 320 degrees from the closed mode. According to another embodiment of the present invention, the longitudinal axis comprises multiple parallel axes, and wherein the hinge assembly is configured to permit rotation of the display component about any of the multiple parallel axes to configure the portable computer between the plurality of display modes. According to another embodiment of the present invention, the system further comprises a scroll wheel disposed at least partially within the base and rotatable about the longitudinal axis, the scroll wheel configured to permit a user to control at least one of operating parameters of the portable computer and the content displayed on the display screen. According to another embodiment of the present invention, the system further comprises a first navigation button disposed on one of the base and the display component and configured to permit the user to manipulate selected content displayed on the display screen. According to another embodiment of the present invention, the display screen is configured to display at least one of a plurality of modes of content, and wherein the navigation button is configured to permit the user to select for display one of the plurality of modes of content.

According to one embodiment of the invention, the first navigation button is user-accessible in each of the laptop mode and the easel mode. According to another embodiment of the present invention, the system further comprises a second navigation button, wherein the first navigation button is disposed on a major surface of the base, and wherein the second navigation button is disposed on a minor surface of the base. According to another embodiment of the invention, the scroll wheel is configured to permit the user to select a mode of content for display on the display screen. According to another embodiment of the invention, the scroll wheel is configured to permit the user to control a volume of sound played by the portable computer. According to another embodiment of the invention, the system further comprises a hinge assembly at least partially housed within the base and configured to rotatably couple the display component to the base. According to another embodiment of the invention, the scroll wheel is disposed at least partially within the hinge assembly. According to another embodiment of the invention, the system further comprises a foot disposed along at least a portion of the base and configured to support the portable computer when in the easel mode.

Still other aspects, embodiments, and advantages of these exemplary aspects and embodiments, are discussed in detail below. Moreover, it is to be understood that both the foregoing information and the following detailed description are merely illustrative examples of various aspects and embodiments, and are intended to provide an overview or framework for understanding the nature and character of the claimed aspects and embodiments. Any embodiment disclosed herein may be combined with any other embodiment in any manner consistent with at least one of the objects, aims, and needs disclosed herein, and references to "an embodiment," "some embodiments," "an alternate embodiment," "various embodiments," "one embodiment" or the like are not necessarily mutually exclusive and are intended to indicate that a particular feature, structure, or characteristic described in connection with the embodiment may be included in at least one embodiment. The appearances of such terms herein are not necessarily all referring to the same embodiment.

BRIEF DESCRIPTION OF THE DRAWINGS

Various aspects of at least one embodiment are discussed below with reference to the accompanying figures, which are not intended to be drawn to scale. The figures are included to provide illustration and a further understanding of the various aspects and embodiments, and are incorporated in and constitute a part of this specification, but are not intended as a definition of the limits of the invention. Where technical features in the figures, detailed description or any claim are followed by references signs, the reference signs have been included for the sole purpose of increasing the intelligibility of the figures, detailed description, and/or claims. Accordingly, neither the reference signs nor their absence are intended to have any limiting effect on the scope of any claim elements. In the figures, each identical or nearly identical component that is illustrated in various figures is represented by a like numeral. For purposes of clarity, not every component may be labeled in every figure. In the figures:

FIG. **1** is an illustration of one example of a portable computer, according to aspects of the invention, in a "laptop" configuration;

FIG. **2** is a block diagram of one example of a computer system;

FIG. **3** is a block diagram of one example of a computer user interface architecture, according to aspects of the invention;

FIG. **4** is an illustration of another example of a portable computer, according to aspects of the invention;

FIG. **5** is a block diagram of one example of a view of digital media content, according to aspects of the invention;

FIG. **6** is a block diagram of another example view of digital media content with responsive controls, according to aspects of the invention;

FIGS. **7**A-B are block diagrams of examples of single album views of digital media content, according to aspects of the invention;

FIG. **8** is a block diagram of one example of a view of digital media content, according to aspects of the invention;

FIG. **9** is an illustration of an example component of a view of digital media content, according to aspects of the present invention;

FIG. **10** is a block diagram of one example of a view of digital media content, according to aspects of the invention;

FIG. **11** is an illustration of an example responsive component of a view of digital media content, according to aspects of the present invention;

FIG. **12** is a block diagram of one example of a view of digital media content, according to aspects of the invention;

FIGS. **13**A-C are illustrations of examples of a control element displayed in embodiments of views of digital media content, according to aspects of the invention;

FIG. **14** is an illustration of an example responsive component of a view of digital media content, according to aspects of the present invention;

FIG. **15** is an illustration of an example of a control element displayed in an embodiment of a view of digital media content, according to aspects of the invention;

FIG. **16** is a block diagram of one example of a view including cards associated with digital media content, according to aspects of the invention;

FIGS. **17**A-B are illustrations of examples of views of the back side of a card and associated controls, according to aspects of the invention;

FIG. **18**A is a block diagram of one example view of digital media content including a lens control, according to aspects of the invention;

FIG. **18**B is a block diagram of one example view of digital media content including an example lens selection control, according to aspects of the invention;

FIG. **19** is a block diagram of one example of a view of digital media content, according to aspects of the invention;

FIG. **20**A is a block diagram of one example of a view of digital media content including an example content control, according to aspects of the invention;

FIG. **20**B is a block diagram of one example of a view of digital media content including a contextual control, according to aspects of the invention;

FIGS. **21**A-B are examples of logical diagrams of the behavior for an example view of digital media content, according to aspects of the invention;

FIG. **22** is a perspective view of the portable computer of FIG. **1** in the easel mode, according to aspects of the invention;

FIG. **23** is an illustration of the portable computer configured into a "frame" mode, according to aspects of the invention;

FIG. **24** is a block diagram of an example of a page view of a camera card including a progress indicator of an upload in progress, according to aspects of the invention;

FIG. **25** is a block diagram of an example an intermediate view of a camera card, according to aspects of the invention;

FIG. **26** is a block diagram of a thumbnail view of a camera card, according to aspects of the invention;

FIG. **27** is a block diagram of a organizational view of digital media content, according to aspects of the invention;

FIG. **28** is an illustration of an example view of user controls for digital media content, according to aspects of the invention;

FIG. **29** is an example of a logical diagram of the behavior for an example view of digital media content, according to aspects of the invention; and

FIG. **30** is an illustration of the portable computer configured into a "flat" mode, according to aspects of the invention

DETAILED DESCRIPTION

Synergy between services providers can be found and exploited by even the most novice user through streamlined computer systems and user interface presentation. According to one aspect, the interplay between various third party services and computer features can be readily appreciated by even a novice user because the various functionality and features sets are easily accessible through the streamlined access controls and consistent user interfaces. In particular, methods and apparatus are provided to facilitate users leveraging online digital media services offered by third party service providers, as discussed in detail below. For example, aspects and embodiments may allow users to create and manage a digital photography library by providing tools to upload content to an Internet "cloud" and to consume aggregated content from the cloud on their computing device, as discussed further below.

It is to be appreciated that embodiments of the methods and apparatus discussed herein are not limited in application to the details of construction and the arrangement of components set forth in the following description or illustrated in the accompanying figures. The methods and apparatus are capable of implementation in other embodiments and of being practiced or of being carried out in various ways. Examples of specific implementations are provided herein for illustrative purposes only and are not intended to be limiting. In particular, acts, elements and features discussed in connection with any one or more embodiments are not intended to be excluded from a similar role in any other embodiments.

Also, the phraseology and terminology used herein is for the purpose of description and should not be regarded as limiting. Any references to embodiments or elements or acts of the systems and methods herein referred to in the singular may also embrace embodiments including a plurality of these elements, and any references in plural to any embodiment or element or act herein may also embrace embodiments including only a single element. References in the singular or plural form are not intended to limit the presently disclosed systems or methods, their components, acts, or elements. The use herein of "including," "comprising," "having," "containing," "involving," and variations thereof is meant to encompass the items listed thereafter and equivalents thereof as well as additional items. References to "or" may be construed as inclusive so that any terms described using "or" may indicate any of a single, more than one, and all of the described terms. Any references to front and back, left and right, top and bottom, and upper and lower are intended for convenience of description, not to limit the present systems and methods or their components to any one positional or spatial orientation.

According to one embodiment, methods and apparatus are provided for creating and managing digital media libraries and, in particular, online digital media libraries. The digital media libraries may include, for example, digital photograph collections, digital video collections, digital music collections, etc. The tools and capability for creating and managing these digital media libraries are provided via a computing device, for example, a streamlined device, having a graphical user interface, as discussed below. For example, various aspects may be implemented as specialized software executing in one or more computer systems. In one embodiment, the digital media content (e.g., the photographs, videos and/or audio files) are stored online, and the graphical user interface provides the user with access to services, including online storage of digital media, and features offered by third party service providers, as discussed below.

One example of a streamlined device includes a portable computer that is configurable between a laptop mode (in which the portable computer has a conventional laptop appearance) and an easel mode in which the base of the computer and its display component stand upright forming an inverted "V," as discussed further herein. Certain aspects and embodiments are directed to a portable computer that is configurable between different operating modes, including a laptop mode (in which the portable computer has a conventional laptop appearance), a flat mode, a frame mode, and an easel mode in which the base of the computer and its display component stand vertically forming an inverted "V," as dis-

cussed further herein. Reference to modes of the computer, modes of the device and intended to include the physical configuration of the portable computer/device. The portable computer is capable of different display formats and functionality in the different modes, and includes a graphical user interface that may work seamlessly with the computer hardware to provide a unified, comfortable, holistic user experience.

Referring to FIG. **1**, there is illustrated one example of a portable computer according to aspects of the invention upon and using which methods and apparatus for managing digital media content may be implemented. In FIG. **1**, the portable computer **100** is illustrated in the "laptop" mode, with the display component **102** inclined at a viewing angle from the base **104**. The display component **102** is pivotably coupled to the base **104** by a hinge assembly (not shown) that allows the display component to be rotated with respect to the base. The hinge assembly may include a single or multiple hinges, which may be any of a variety of hinge types, including, but not limited, to single-axis hinges, multiple-axis hinges, geared hinges, etc. In one example, the hinge assembly allows the display component **102** to be rotated (or tilted) about a longitudinal axis **101** running along an interface between the display component **102** and the base **104**, as illustrated in FIG. **1** and discussed further below. The base **104** includes a keyboard **106** and internal electronic components (not shown), such as a central processing unit, memory, and other components necessary to operate the portable computer, as known to those skilled in the art. In some embodiments, the base **104** may also include a touch pad **108** or trackball (not shown) for receiving user commands, as known to those skilled in the art.

In one embodiment, the display component **102** includes a display screen **110**, and may also include a camera **112**, microphone **114**, and infrared receiver **116**, as discussed further below. It is to be appreciated that the locations of the camera **112**, microphone **114** and infrared receiver **114** are not limited to the example illustrated in FIG. **1**, and may be placed in other locations on the display component **102** and/or base **104**, as would be recognized by those skilled in the art. The display component **102** may also include cushions **118** that provide soft contact points between the base **104** and the display component **102** when the portable computer is closed. In one example, the cushions **118** are made of rubber. However, it is to be appreciated that the invention is not so limited, and the cushions **118** may comprise materials other than rubber, including, for example, a polymer, felt, or other suitable materials as would be recognized by those skilled in the art.

FIG. **2** illustrates a block diagram of some components of an example of the portable computer **100**, in which various aspects of the present invention may be practiced. For example, various aspects of the invention may be implemented as specialized software executing in one or more computer systems including multiple computer systems communicating over network. As depicted in FIG. **2**, the computer **100** includes a processor **210**, a memory **220**, an interface **240** and a storage system **250**. Components of the portable computer **100** may be coupled by an interconnection element **230**. The interconnection mechanism **230** enables communications (e.g., data, instructions) to be exchanged between system components of the computer system **100**. The interconnection mechanism **230** may include one or more physical busses (for example, busses between components that are integrated within a same machine), or may include any communication coupling between system elements including specialized or standard computing bus technologies such as IDE, SCSI, PCI and InfiniBand. In one example, computer system **100** is implemented without hard drive devices.

The processor **210**, which may include one or more microprocessors or other types of controllers, can perform a series of instructions that result in manipulated data. The processor **210** may be a commercially available processor such as an Intel PENTIUM, Motorola PowerPC, SGI MIPS, Sun UltraSPARC, or Hewlett-Packard PA-RISC processor, but may be any type of processor or controller as many other processors and controllers are available. The processor may also execute an operating system that manages at least a portion of the hardware elements included in computer **100**. The operating system may be, among others, a Windows-based operating system (for example, Windows NT, Windows 2000 (Windows ME), Windows XP, or Windows Vista) available from the Microsoft Corporation, a MAC OS System X operating system available from Apple Computer, one of many Linux-based operating system distributions (for example, the Enterprise Linux operating system available from Red Hat Inc.), a Solaris operating system available from Sun Microsystems, or a UNIX operating systems available from various sources. Many other operating systems may be used, and embodiments are not limited to any particular operating system. As shown, the processor **210** is connected to other system elements, including a memory **220**, by the interconnection mechanism **230**.

The memory **220** may be used for storing programs and data during operation of the computer system **200**. Thus, the memory **220** may be a relatively high performance, volatile, random access memory such as a dynamic random access memory (DRAM) static memory (SRAM), or Flash memory; however, the memory **220** may include any device for storing data, including a non-volatile storage device. Various embodiments in accord with the present invention can organize the memory **220** into particularized and, in some cases, unique structures to perform the aspects and functions disclosed herein.

Still referring to FIG. **2**, the computer **100** also includes one or more interface devices **240** such as input devices, output devices and combination input/output devices. The interface devices **240** may receive input and/or provide output. More particularly, output devices may render information for external presentation. Input devices may accept information from external sources. Examples of interface devices include, among others, the keyboard **106**, mouse devices, trackballs, microphone **114**, touch screens, printing devices, display screen **110**, speakers, network interface cards, etc. The interface devices **240** allow the computer system **200** to exchange information and communicate with external entities, such as users and other systems.

The storage system **250** may include a computer readable and writeable nonvolatile storage medium in which instructions are stored that define a program to be executed by the processor. The storage system **250** also may include information that is recorded, on or in, the medium, and this information may be processed by the program. The instructions may be persistently stored as encoded signals, and the instructions may cause a processor to perform any of the functions described herein. The medium may, for example, be a flash memory. Typically, in operation, the processor causes data to be read from the nonvolatile recording medium into another memory that allows for faster access to the information by the processor than does the medium. This memory is typically a volatile, random access memory such as a dynamic random access memory (DRAM) or static memory (SRAM). The memory may be located in storage **250** as shown, or in memory system **220**. The processor **210** generally manipu-

lates the data within the memory **220**, and then copies the data to the medium associated with storage **250** after processing is completed. A variety of mechanisms are known for managing data movement between the medium and integrated circuit memory element and the invention is not limited thereto. The invention is not limited to a particular memory system or storage system.

In one embodiment, the computer system does not incorporate mass storage (i.e. a hard drives), instead the system is configured to employ RAM and Flash memory storage. The capacity of the flash memory may be significantly less than traditional mass storage options. Thus in some embodiments, traditional features such a download, have been configured to operate differently for the computer **100**. According to another aspect, various operations provides on conventional systems are adapted for streamlined processing. In on example, operations that require large amounts of computer storage are transformed into remote storage requests. In one embodiment, a streamlined device is configured to identify local storage request and transform them into a storage request to an on-line service provider identified in a user and/or device profile. In another embodiment, the system prompts a user to identify a service provider in response to a local request. Various operations may be transformed, including download and print operations, among others.

The computer system may include specially-programmed, special-purpose hardware, for example, an application-specific integrated circuit (ASIC). Aspects of the invention may be implemented in software executing on hardware, hardware or firmware, or any combination thereof. Further, such methods, acts, systems, system elements and components thereof may be implemented as part of the computer system described above or as an independent component.

Although the portable computer **100** is shown by way of example as one type of computer system upon which various aspects and functions may be practiced, aspects of the invention are not limited to being implemented on the computer system as shown in FIGS. **1** and **2**. Various aspects and functions in accord with the present invention may be practiced on one or more computers having a different architectures or components than those shown in FIG. **2**.

Computer system **100** may programmable using a high-level computer programming language. Computer system **100** may be also implemented using specially programmed, special purpose hardware. The processor **210** and operating system together define a computer platform for which application programs in high-level programming languages are written. It should be understood that the invention is not limited to a particular computer system platform, processor, operating system, or network. Also, it should be apparent to those skilled in the art that the present invention is not limited to a specific programming language or computer system. Further, it should be appreciated that other appropriate programming languages and other appropriate computer systems could also be used.

One or more portions of the computer system may be distributed across one or more computer systems coupled to a communications network. For example, various aspects of the invention may be distributed among one or more computer systems (e.g., servers) configured to provide a service to one or more client computers, or to perform an overall task as part of a distributed system. For example, various aspects of the invention may be performed on a client-server or multi-tier system that includes components distributed among one or more server systems that perform various functions according to various embodiments of the invention. In one embodiment, an Internet cloud is maintained on server systems accessible from a plurality of devices. These components may be executable, intermediate (e.g., IL) or interpreted (e.g., Java) code which communicate over a communication network (e.g., the Internet) using a communication protocol (e.g., TCP/IP). It should be appreciated that the invention is not limited to executing on any particular system or group of systems. Also, it should be appreciated that the invention is not limited to any particular distributed architecture, network, or communication protocol.

According to one embodiment, streamlining user interactions with the computer system/device includes representing computer based content in visual representations that render computer operations/behavior in a consistent manner. These visual representations may be rendered as cards, as discussed in more detail below. Different types of cards may be employed to render different types of available content. For example, web based content, may be rendered as a web card that is associated with a mapping to web content. Some web cards map directly to web pages and in response to selection of the web card the computer device executes the mapping and displays a web view of the content. Other cards may be used to provide interactive displays selectable by a user. In another example, system operations are displayed as system cards, which are associated with mappings to system operations, for example communications configurations, and may comprise a settings card, among other system options. Another type of card includes a channel card configured to stream web based content in a manner that allows for summarization of content, while still providing the ability to fully appreciate the summarized content.

Using channel cards according to aspects and embodiments, summarized content may be presented in a manner that permits appreciation and interaction with the summarized content itself. In another example, channel card are configured to present a streamlined view that cannot only be appreciated and interacted, but may be transitioned from one mode of viewing to another without loss of the ability to appreciate and interact with the streamlined view. A more detailed discussion of embodiments and examples of a card-based system for rendering computer based content in visual representations is discussed in U.S. patent application Ser. No. 12/416,479, filed on Apr. 1, 2009 and entitled "SYSTEM AND METHOD FOR STREAMLINING USER INTERACTION WITH ELECTRONIC CONTENT," which is incorporated herein by reference in its entirety.

As discussed above, according to one embodiment, methods and apparatus are provided for managing digital media libraries via, for example, the computer **100**. In one example, the computer **100** includes a streamlined graphical user interface that provides access to the digital media libraries. According to another embodiment, there is a community aspect to the digital media libraries, which includes sharing of digital content, configurations and customizations between users. In particular, sharing may involve the transmission of user interface elements to other users. In one example, a user may share a card and any of its configurations with another user. Access to the shared user interface elements, in some embodiments, facilitates communal computer usage. Content and context retention by user interface elements that can be shared provides unique advantages to the users of the streamlined devices, as discussed further below.

Referring to FIG. **3**, there is illustrated a block diagram of one example of an architecture of the portable computer **100** including a streamlined user interface. The user interface includes a "home" screen **310** that displays a plurality of modes of content **320**. In the illustrated example, the home screen **310** contains five modes of content **320**; however, it is

to be appreciated that the home screen may include more or fewer than five modes of content and that the modes of content may differ from the examples discussed below. According to one example, the modes of content **320** accessible via the home screen **310** may include "media" **321**, "connect" **322**, "web" **323**, "applications" **324**, and "channels" **325**. Using the streamlined user interface, also referred to as a "map" interface, information, programs, features and applications may be grouped into the various modes of content **320**. By selecting any mode of content **320**, the user may access the content organized within that mode. For example, the media mode **321** may provide access to a media player to play, view, search and organize digital media such as music, video, photos, etc. The web mode **323** may provide access to internet browsing and searching. The channels mode **325** may provide access to different functionality of the portable computer, with the different functions or features defined as different channels. For example, a channel may include a "photo frame" channel in which the portable computer may be configured to display a pre-selected image or set of images, etc. from a digital media library. Some or all of the modes of content **320** may access, retrieve and/or store information on an Internet cloud **330**.

From the home screen **310**, the user may navigate among the different modes of content **320** and, once a particular mode of content is selected, may navigate within that mode of content. In one example, the home view **310** is comprised of various cards, each card providing access to computer based content. According to one aspect, cards can be thought of as the building blocks of the user interface, providing access to a plurality of views and/or content. Indeed, cards as elements of the graphical user interface, are configured to be shared across users and across other streamlined devices. The ability to employ the features and functions of card based elements may be limited to streamlined devices, although cards and settings may be shared with traditional devices.

Navigation from the home view in and among different modes of content may be accomplished using traditional interfaces, such as the keyboard **106**, touchpad **108**, a mouse, trackball, joystick, or other interface device. In one embodiment, the portable computer **100** may include additional navigation devices, including a scroll wheel and one or more navigation buttons, as shown, for example, in FIG. **4**. In the example illustrated in FIG. **4**, the portable computer **100** includes a scroll wheel **120** and two navigation buttons **122**, **124**. In one example, the scroll wheel **120** is positioned, as shown in FIG. **4**, such that it is rotatable about the longitudinal axis **101** (see FIG. **1**) running along the interface between the display component **102** and the base **104**. According to one embodiment, the portable computer **100** is configurable into various different configuration modes including the laptop mode shown in FIGS. **1** and **4**, and an "easel" mode in which the base **104** and the display component **102** stand upright forming an inverted "V," as discussed further below. Accordingly, positioning the scroll wheel **120** on the longitudinal axis **101** may have certain advantages, including providing accessibility to the scroll wheel in the different configuration modes of the portable computer; however, it is to be appreciated that the scroll wheel may be placed in any convenient or suitable location on the portable computer, not limited to the position shown in FIG. **4**. Similarly, positioning the navigation button **122** on the side of the base **104**, as shown in FIG. **4**, may also provide accessibility in the different configuration modes of the portable computer **100**; however it is to be appreciated that the navigation button **122** may be placed in a variety of locations, not limited to the location illustrated in FIG. **4**.

As discussed above, in one example, the media mode of content **321** may provide access to a media player to play, view, search and organize digital media such as music, video, photos, etc. Thus, a user may use the media mode of content **321** to create and manage digital media libraries including, for example, collections of digital photographs. According to one embodiment, methods, tools and interfaces are provided to allow users to store, organize, edit, view and share digital photograph collections, as well as video and/or audio collections. These collections may be presented to the user as if stored on local storage associated with the portable computer **100**; however, as discussed above, in at least some examples, the digital media content is stored remotely in the cloud **330** (see FIG. **3**). Therefore, the portable computer software may include the ability to interact with third party online service providers, as discussed further below. In addition, as discussed above, in one example, the portable computer **100** includes a camera **112** and therefore, methods, tools and interfaces may be provided to allow the user to take and manage photographs and/or video using the camera **112**. The portable computer **100** may also be configured to allow an external digital camera (not shown) to be connected to the computer, such that the user may extract photographs and/or videos from the external camera, to store, manage and share using the computer, as discussed further below.

According to one embodiment, the computer **100** is integrated with remote content storage and/or access in the cloud **330**. The integration may be provided through third party service providers, in one example photo service FLICKR is integrated with various aspects of the device and/or the device's user interface to provide seamless access to photo content stored by the third party provider. Thus, digital content items, such as photographs, videos, etc. may be displayed on the portable computer, as discussed below, but stored remotely. The integration with remote storage services permits reduced storage capacity on the user device, for example, a portable computer. Reducing and/or eliminating the need for non volatile memory in the computer system is advantageous in that the device itself may be reduced in complexity and any associated cost. In some embodiments, a streamlined device do not incorporate a hard disk drive for storage, providing for any local storage requirement through RAM and Flash memory.

Content may be added to the user's digital medial library in a variety of different ways. For example, digital content items added to the user's account with any online hosting service (e.g., FLICKR, SHUTTERFLY, etc.) the user has registered with the portable computer **100** may be automatically added to the user's digital media library. If a person shares an album with the user via a registered online hosting service, and subsequently updates the shared album to include new items, the new items may be automatically added to the user's digital media library. The user may add content items, such as photographs, directly from web pages using, for example, a "save image" control in the web browser toolbar. In one example, clicking and holding on a particular image on a web page opens a contextual menu providing options for the user to save one or more photographs. For example, clicking a "save multiple photos" option in the contextual menu may prompt the user to click on all displayed images that he/she wishes to save and then click a "done" or "save" control to complete the action. The user may similarly save photographs from an email. As discussed above, in one embodiment, the portable computer **100** does not include local mass storage; instead the digital media content items are stored by an online hosting service. Accordingly, saving of photos from a web page or email may be implemented through the hosting service. The

user may also add content items by uploading them from a camera, card reader or USB device, as discussed further below. In one example, the portable computer **100** may be pre-loaded with a selection of stock images that automatically appear in the user's digital media library. The user may delete these stock images; however, if the user's digital media library eve becomes empty, the stock images may be automatically re-added to the library.

According to one embodiment, collections of digital content items, including photographs and videos, may be displayed in any of a plurality of different views. These views may include a time view, an album view, a page view, an intermediate view, and a lens view, each of which is discussed further below. Each view may offer the user particular interaction options, features and benefits, as also discussed below. In the time view, an entire digital media library may be displayed with content items arranged chronologically, regardless of whether or not the content items (e.g., individual photographs or videos) have been assigned to an album. In the album view, individual albums of content items may be displayed. In the album view, those content items not assigned to an album are not displayed. The time view and the album view may be considered the "workhorses" of the digital media aspect of the portable computer **100**, allowing a user to quickly and easily locate individual content items and perform actions, such as, share content with others, create channels, and order photograph prints from online service providers. The lens view may offer the user a variety of interactions with the digital media content, as discussed further below. In one example, for some photograph editing functions, such as correcting red-eye, cropping, adjusting contrast, etc., interfaces to online service providers may be supplied, allowing the user to leverage existing features of their online photograph service provider.

Referring to FIG. **5**, there is illustrated a block diagram of one example of an album view. In the album view, the screen may include a body portion **550** in which the albums are displayed, and a header **555**. In the illustrated example, in the album view, the albums **510** are displayed as a list in the body portion **550**, with a scroll bar **515** that allows the user to scroll down to see additional albums that do not fit within the page view. In one example, the list of albums may be sorted by earliest photograph creation date, with the newest on top; however, it will be readily appreciated that numerous other organizations of the albums **510** are possible. A header caption **525** identifies the number of albums present and the total number of photographs contained within the albums. In one example, each album **510** includes a title **530** that identifies the album. The title **530** may be created by the user and may be descriptive of the photographs contained within the album. Each album **510** may also include a caption **535** that identifies information about the album. For example, the caption **535** may indicate the number of photographs in the album as well as the date range of the photographs in the album. For each album **510** there may be displayed a preview photograph **540**, which may be, for example, a photograph selected by the user (e.g., a representative or favorite photograph), or a default selected photograph, for example, the first photograph in the album. Each photograph in the album may be displayed as a thumbnail **545**. In the header **555**, there may be displayed user-selectable "buttons" **560**, **565** which allow the user to select between the time view and the album view, for example, by clicking (e.g., using a mouse, the touchpad, the scroll wheel, or a navigation button) on the button corresponding to the desired view.

According to one embodiment, the album view allows the user to access and view albums of their own photographs, as well as albums shared with them by other users, for example, through an online photo-sharing service. As discussed above, in one embodiment, only photographs (or other digital content items) that have been assigned an album by the user will be displayed in the album view. The computer **100** may include software that automatically creates a default album for any unsorted/unassigned photographs found on the computer. In one example, this default album is not displayed in the album view. Many online photo hosting services require the use of albums and do not allow a photo to be saved to the service without being assigned to an album. However, this requirement may not be meaningful to users who are used to having many photographs in the real world which are not associated with an album. Accordingly, the digital media system may automatically create the default album to store otherwise unsorted content items.

Still referring to FIG. **5**, the thumbnails **545** provide the user with a preview of the individual photographs contained in the album. In one embodiment, when the user "hovers" over a particular thumbnail **545**, the preview photograph **540** changes to display that thumbnail. The thumbnail may also increase slightly. Hover indicates the movement of a pointer, typically represented by a white arrow on the computer system display, over a particular item on the display screen, such as a thumbnail **545**.

In one example, when the user hovers over a thumbnail, album controls may appear, as shown in FIG. **6**. Referring to FIG. **6**, the album controls **610** may include options to share an album (e.g., control **612**), and to edit the album using a third party service provider (e.g., control **614**). In one example, albums that are shared from within the album view may be shared as channel cards, but may also appear in the recipient's album view. As discussed above, in one example in which the photographs are stored on the cloud **330** (see FIG. **3**), using a third party service provider website (for example, FLICKR; SHUTTERFLY; SNAPFISH, etc.), the control **614** for editing the album may automatically display the name of the service provider. If selected (e.g., clicked on) by the user, the edit control **614** may automatically open a web card to the album on the service where it is stored. In one example, the edit control **614** may only appear for albums of the users own photographs, and not for albums that have been shared with the user by another user, for which the user may not have editing privileges. The album controls **610** may also include a control **616** for "dissolving" the album and a control **618** for deleting the album. Selecting the dissolve control **616** may remove the album, but retain the album contents in the user's digital media library. If the user selects the delete album control **618**, the album and its contents may be deleted from the user's digital media library, after a warning/confirmation message is displayed to the user. In one example, if the user selects the share control **612** to share an album with another person, any changes the user has made to the album (e.g., removing a content item) are retained when the other person views the shared album.

According to one embodiment, when the user clicks on (or otherwise selects) an individual photograph thumbnail **545**, or on the preview photograph **540** in a particular album **510**, a single album view may be displayed. In one example of the single album view, the album thumbnails **545** in the selected album **510** grow larger and arrange themselves in a horizontal list, as shown in FIG. **7**A. In the single album view illustrated in FIG. **7**A, the user sees larger previews **710** of the photographs in the selected album. The user may navigate back and forth among the items in the album by hovering over the left or right edges of the list, optionally over a scroll indicator **720**, to scroll the list of preview images **710**. In one example, the

speed of the scrolling depends on where the cursor is in the active area. For example, the closer the cursor is to the edge of the screen, the faster the scroll. In one embodiment, when the user is scrolling left or right through the album, the horizontal list of previews **710** tilts to show perspective, as shown in FIG. **7**B. In one example, in the tilted view, the images scroll automatically and the speed of the scrolling action corresponds to the maximum scrolling speed that would be available manually, e.g., if the cursor were as close to the edge of the screen as possible. In another example, the degree of tilt corresponds to the scrolling speed. For example, the more tilted the view, the faster the scroll. A scroll indicator **720** may indicate the direction of the scroll. Clicking on an individual item in the single album view may zoom that item into an intermediate view, as discussed further below. In the intermediate view, the user may still see hints of the other images in the album in the background, thus providing context for the zoomed-in item. Clicking on the item in the intermediate view may enlarge the item into a full screen view, as discussed further below.

In one embodiment, clicking on the background **730** returns the user to the album view shown in FIG. **5**. In one example, the background **730** includes the users other albums. Thus, clicking on the background may mean clicking on another album; however, even in this case, clicking on the other album in the background **730** may still return the user to the album view, rather than to a single album view of the clicked-on album in the background. This may simply navigation for the user, particularly where the majority of the background belongs to other albums, such that if clicking on one of the background albums jumped to that album, the user would find it difficult to return to the overall album view of FIG. **5**.

As discussed above, an alternative to the album view is the time view. According to one embodiment, in the time view, the entire contents of the user's digital media library is displayed, even if items are not organized into albums. The digital content items in the digital media library may be arranged chronologically (e.g., in the order they were taken for photos and videos) in columns from top to bottom, left to right, or in rows from left to right, top to bottom. It is to be appreciated that other arrangements of the digital content items may also be implemented. An example of the time view is illustrated in FIG. **8**. Similar to the album view, the time view may comprise a body portion **810** and a header **820**. As shown in FIG. **8**, in the body portion **810** of the time view, preview images **830** of each item in the digital media library is displayed. As discussed above, the preview images are arranged in columns and rows. A timeline **840** may supply a navigation control that allows the user quick access to the content in the digital media library and a visual indication of the number of items in the library.

In one embodiment, the digital content items in the user's digital media library are stored, using a service offered by a third party service provider (e.g., FLICKR, SHUTTERFLY, SNAPFISH, etc.) in the cloud **330** (see FIG. **3**). Thus, the preview images displayed in the time view may be visual representations of remotely stored content.

Referring to FIG. **9**, there is illustrated an example of the timeline **840** that may be displayed in the time view. In the illustrated example, the timeline includes three rows of tick marks **910** that correspond to the three rows of preview images **830** displayed in the body portion **810** of the time view illustrated in FIG. **8**. It is to be appreciated, however, that the preview images **830** may be displayed in any number of rows, not limited to three rows, and therefore, the timeline **840** may include any corresponding number of rows of tick marks **910**, not limited to three rows. Scroll controls **920** may be provided to allow the user to scroll through the timeline using a cursor. In one example, superimposed over the timeline **840** are markers **930** for individual months and years, as shown in FIG. **9**. In addition, the timeline may include a "handle" **940** which indicates the section of timeline that corresponds to the preview images **830** displayed in the body portion **810**. In one example, clicking anywhere on the timeline **840** moves the handle **940** to that point in time and changes the display of preview images **830** accordingly. According to one embodiment, the timeline **840** is not linear. Instead, the length between tick marks **910** on the timeline corresponds to the number of digital content items in the digital media library for that period of time. Thus, the spacing between markers **930** for different months or years may provide a visual indication of the number of content items in that month or year. For example, if the media library contains 300 content items (e.g. photographs and/or videos) for March 2007 and 100 content items for April 2007, the space allocated to March 2007 on the timeline **840** may be three times greater than the space allocated to April 2007.

The timeline **840** may also provide a visual indication of new content recently added to the digital media library. For example, when another person shares an album with the user, or when the user uploads new photographs and/or videos from a camera, a new content indicator **950** may be displayed in the timeline **840**. In one example, the new content indicator **950** includes highlighting or changing the color of the tick marks **910** corresponding to the newly added content items. The new content indicator **950** may persist for a predetermined time period, or until the user acknowledges the new content. For example, when an album is shared with the user, the new content indicator **950** may persist until the user acknowledges the shared card notification, as discussed further below. In another example, when the user uploads new content to the library, the new content indicator **950** may persist until the user closes/cancels an "upload complete" notification, as also discussed further below.

There may be multiple ways in which a user can navigate in the time view. For example, if the user hovers over the left or right edge of the timeline **840**, the timeline may scroll to reveal more of the timeline. In one example, if this scrolling causes the handle **940** to bump against the edge of the visible timeline, the handle remains on the edge and the content in the body **810** displayed changes accordingly. In this manner, the handle **940** is always visible. As discussed above, clicking on the timeline **840** may bring the user directly to the corresponding time frame. In one example, if the user clicks on the timeline **840**, thereby jumping to a new point in time, a brief animation, such as the "wall" of preview images **830** in the body **810** tilting and scrolling, may be displayed. The user may also click on and drag the handle **940** to scroll through the preview images **830**. In one example, clicking and dragging the handle **940** will similarly cause the wall of preview images **830** to tilt and scroll. As discussed above with reference to the album view, the degree of tilt may correspond to the speed of the scroll, and the direction of the tilt may correspond to the direction of the scroll.

As discussed above with reference to the single album view, clicking on a particular preview image **710** or **830** may cause the display to navigate to the intermediate view. In one example, in the intermediate view, the selected image is enlarged and comes to the foreground of the screen, while the remaining preview images **710**, **830**, recede into the background. Referring to FIG. **10**, in one example, the unselected preview images slide left and right so that a few may be seen at the edges of the screen, providing context for the selected

image, as discussed above. The enlarging of the selected image and receding of the remaining images may be animated, providing the user with a visual experience as the view changes to the intermediate view. To return to the previous view, i.e., either time view or single album view, the user may click anywhere on the background **1010**, even on one of the receded images **1015**.

Referring to FIG. **10**, in one example, the intermediate view includes a caption area that displays a caption **1020** for the item **1025**. The caption **1020** may be editable if the item **1025** belongs to the user. If the user has not yet entered a caption for the item, a message, such as "click here to enter a caption for this photo/video," may be displayed in the caption area. If the item belongs to another person, i.e., is in an album that has been shared with the user, the caption **1020** may be set by the other person and therefore may not be editable by the user. The date the item was taken may also be displayed in a date area **1030**. The intermediate view may include navigation controls **1035** which allow the user to step through items in the digital media library or album, for example, depending on whether the user entered the intermediate view from the time view or single album view, while remaining in the intermediate view. The intermediate view may also include a toolbar **1040** that provides access to a number of actions that may be performed on the item **1025**. In one example, the contents of the toolbar **1040** depends on whether the item belongs to the user or is an item that has been shared with the user, and on the type of item (e.g., whether the item is a photograph or video).

In one embodiment, clicking on the item **1025** in the intermediate view further zooms into the image, presenting it a full-screen view. If the item **1025** is a video, the video may start playing automatically. Moving the cursor may cause a control bar to be displayed, as discussed above, to allow the user to stop and start the video, and to navigate forwards and backwards within the video. The control bar may disappear if the cursor remains still for a predetermined period of time, for example, a few seconds. In one example, in the full screen view, only the image (photo or video) is shown; that is, the view does not include a header or other information which may distract the user from the image itself. If the item **1025** is a photograph, by default, the full screen view may include no controls, and no indication whether comments are available. In one example, if the user moves the pointer (e.g., using a mouse) to the edge of the screen, the left/right navigation control indicators appear as in other views. The user may also use the arrow keys or other keyboard keys or other input devices to cycle through images in the full screen view. In one example, clicking anywhere on the photo or video (or using another input mechanism, for example, pressing the Escape key) will return to the intermediate view.

Historically and to present, the interface on digital cameras can be difficult to set or change and thus it is not uncommon for the date stamp of photographs and/or videos taken with the camera to appear incorrectly in the user's digital media library. Correct dates, however, may be critical to the success of time view and potentially also to many features of the digital media functionality of the portable computer **100**. Therefore, in one example, the date setting may be adjustable for items in the digital media library. In one example, if the user hovers over the date area **1030** for an item in the intermediate view, an indication may be provided that the date is editable. For example, the color of the date may change, and/or the date area may be highlighted. Clicking the date may cause controls for editing the date to become available. For example, as shown in FIG. **11**, the date area may display scrollable fields for the month (**1045**), day (**1050**), and year (**1055**), along with a save button **1060**. The user may change the date by clicking the scroll arrows for each field, selecting a desired date for the item **1025**. According to one embodiment, once the user makes the correction, the user may be prompted to adjust the dates for all items that were taken with the same camera and uploaded in the same session. Thus, the digital media program may identify all the items that are likely to have dates offset by the same amount as the item just corrected, and offer to correct the date(s) of these item(s) by the same offset. For example, a prompt to the user may read: "I have identified [#] other items taken with the same camera and saved at the same time as this [photo/video]. Would you like me to correct the date for these items as well?" with the options "Yes, please" and "No, thanks" for the user to select. In one example, "No, thanks" is the default.

According to one embodiment, for content items that belong to the user, date corrections may propagate throughout their computer network. Thus, if the user corrects the date on a content item that has previously been shared with another user, the corrected date is reflected on the other user's display. This propagation of corrections may be effected because the digital content items, and associated data, such as date, caption, etc., may be stored in the cloud **330**, as discussed above. Thus, when the other user views the shared content item, they are viewing a visual representation of digital content stored in the cloud, rather than a locally stored digital content item. Some online digital photograph and/or video services do not permit editing of dates associated with the stored photographs and/or videos. In addition, a user may wish to edit the date associated with a shared item, for which they may not have editing privileges. Thus, although in some instances it may be preferable to save date corrections to the hosting photo/video service, if this is not possible, date corrections may be locally stored on the portable computer **100** for display purposes. In this instance, date corrections will be reflected when the user views the digital content item on the portable computer **100**, but will not propagate to other users viewing shared items.

Referring again to FIG. **10**, as discussed above, the intermediate view includes a toolbar **1040** that includes one or more controls **1065** that may be used to manipulate the item **1025**. In one embodiment, the toolbar **1040** contains controls **1065** including "add to pick list," "add/view comments," and "rotate." The "add to pick list" and "add/view comments" controls are discussed below. The rotate control rotates the item **1025** 90 degrees, either clockwise or anti-clockwise. The direction of rotation may be pre-set (i.e., rotation is always in the same direction) or may be user-selectable. If possible, the rotation may be stored with the item **1025** on the appropriate online photo/video hosting service, bur if not, the change may be stored locally and affects only the user's view of the item **1025**. If the item **1025** belongs to the user, the toolbar may further include an edit control **1070** and a delete control **1075**.

In general, photo editing can be grouped into two broad categories, namely editing that alters the content of an image (such as cropping, red-eye, removal, and adjusting the contrast), and editing that alters the display of an image (such as rotation, creation date, and view/hide). In one embodiment, the digital media aspect of the portable computer **100** may encourage users to leverage existing services (offered by their online photo hosting service) for the former, via the edit control **1070**, while supplying tools for the latter. In one example, the edit control **1070** may display a message similar to "edit on [service]," where the [service] is the name of the third party hosting service that stores the user's digital media library in the cloud **330** (for example, FLICKR). Clicking on the edit control **1070** may open a web card for the item **1025** on the user's hosting service, allowing the user to edit the

item, as discussed further below. In some instances, the user will not have the appropriate access to perform either type of editing operations on many of the images in their media library, either because the particular image does not belong to the user, or because the photo hosting service does not support the particular editing action. According to one embodiment, the digital media aspect of the portable computer **100** allows the user to perform display edits on any digital content item in their digital media library regardless of whether or not that edit function is available via the library hosting service. For example, the user may rotate any photo or video in their digital media library, using the rotate control discussed above, even if this rotation is only available on the user's display on the portable computer **100** and does not affect the underlying data stored in the cloud **330**.

Similarly, the function of the delete control **1075** may vary depending on various factors. If the item **1025** belongs to the user, the delete control **1075** may allow the user to delete the item from their digital media library. If the item **1025** does not belong to the user, the delete control **1075** may be replaced in the toolbar **1040** by a "remove" control (not shown). The remove control allows the user to remove items from their digital media library that do not belong to them, without affecting the underlying data in the cloud. Thus, the underlying data may remain in the cloud, since the user does not have permission to actually delete the item), but the item is removed from the user's view on the portable computer **100**. Thus, the user may make local changes to their own data that are not reflected on the underlying media library hosting service, thus allowing the user to customize and enhance their own viewing experience.

Still referring to FIG. **10**, if the item **1025** is a video, the toolbar **1040** may include additional video controls (not shown), such as "play" and "stop" or "pause." The video controls may also include a video play timeline with a click-and-drag "scrubber" that identifies the current playpoint in the video in relation to the length of the view, and also allows the user to navigate through the video.

As discussed above, in one embodiment, one of the controls **1065** in the toolbar **1040** is a "comments" control, that allows the user to add and/or view comments associated with the item **1025**. If comments are available for the item **1025**, a comments icon **1080** may be displayed on the item, for example, in an upper corner of the item. In one example, in the intermediate view, the comments icon **1080** shows the number of comments available for the item **1025**. If the user clicks the comments control in the toolbar **1040** of the intermediate view, the item **1025** turns over to reveal a "back side" showing existing comments and allowing the user to add/edit comments. In one example, an animation of the item **1025** turning over is provided.

Referring to FIG. **12** there is illustrated one example, of a "back view" of the item **1025**. The back view includes a preview image **1210** of the item **1025**, along with an "add comments" area **1220** where the user can type a new comment. Comments may also be added by persons with whom the user (or someone else) has shared the item **1025**. Thus, existing comments **1230** may be displayed, along with a user image **1240** selected by the person leaving the comment and an identifier **1250** which provides identifying information for the comment, such as the name of the person who left the comment and the date and time the comment was left. In one example, the back view includes a "from" selector **1260** which allows the user to select to display only comments from a particular person or group of persons. If the user types a comment into the add comments area **1220**, an "add comment" button **1270** may be displayed. Clicking the add comment button **1270** may add the user's comment to the item **1025**. Clicking a "done" button **1280** may turn the item **1025** back over, returning the user to the intermediate view. In one example, the navigation controls **1035** remain available in the back side view, allowing the user to navigate backwards and forwards through the digital medial library, displaying the back side (comments) view for each item. In one example, clicking in the background **1010** turns the item **1025** back over and then exits the intermediate view, returning the user to either the single album view or time view. An animation of these steps occurring may be displayed during the transition from the comments view, through the intermediate view, to the single album or time view.

In one example, a small comments icon **1080** is also displayed in the corner of those preview images **710** (in the single album view) or **810** (in the time view) for which comments are available. Clicking on the comments icon **1080** may bring up the comments view for the associated content item. In one example, clicking on the comments icon **1080** in one of these views causes an animation to be displayed, the animation including zooming into the intermediate view for the selected preview image **710**, **810**, and turning the item **1025** over, as discussed above.

As discussed above, in one embodiment, one of the controls **1065** in the toolbar **1040** is an "add to pick list" control. The pick list is an organization tool that allows the user to gather together a group of digital content items for a particular action. For example, in the pick list, the user may collect content items to be shared with another user, used to create a custom channel, as discussed further below, or for which the user wishes to buy prints or access some other service provided by the online library hosting service. According to one embodiment, the pick list appears when the user adds a content item to the pick list, and may remain visible until the user clears the list. For example, FIG. **13**A illustrates an example of the single album view, with the pick list **1310** displayed across the top of the view. Similarly, FIG. **13**B illustrates an example of the time view displaying the pick list **1310**. It is to be appreciated that although the pick list **1310** is shown in FIGS. **13**A and **13**B located near the top of the screen, below the header **555**, **820**, its location is not limited to the illustrated example, and the pick list may be displayed elsewhere on the screen, for example, along the bottom of the screen, or vertically along one side of the screen.

According to one embodiment, the pick list **1310** comprises one or more thumbnails **1320** corresponding to the content items added to the pick list, as shown in FIGS. **13**A and **13**B. The thumbnails **1320** may be arranged in the order in which the content items were added to the pick list **1310**. In one example, the thumbnails **1320** cannot be re-ordered by the user. Navigation controls **1330** allow the user to scroll through the pick list **1310**. Referring to FIG. **13**C, there is illustrated one example of a pick list **1310** including pick list controls **1340**. The pick list controls **1340** may allow the user to perform any of a number of actions on the pick list **1310** and on the content items contained in the pick list. For example, the pick list controls **1340** may include options to order prints, to share the items in the pick list, to add a channel, and/or to clear and close the pick list. In one example, selecting the clear and close control empties the pick list **1310** and removes it from display; however, the content items in the pick list may not be deleted from the digital content library. Hovering over a particular thumbnail **1320***a* (as indicated by pointer **126**) may increase the size of that thumbnail, as shown in FIG. **13**C, and reveal a delete icon **1350**. In one example, hovering on the delete item causes a tip to be displayed, indicating that clicking the delete icon **1350** will cause the content item to be

deleted from the pick list. In one example, clicking on the delete icon **1350** deletes the content item from the pick list **1310**, but not from the user's digital media library. Clicking elsewhere (i.e., not on the delete icon **1350**) on the thumbnail **1320***a* may cause the associated content item to open in the intermediate view. If the user was in the time view (FIG. **13**B), the timeline **840** may scroll in the background and the handle **940** moves as appropriate. If the user was in the album view and clicks a thumbnail **1320** in the pick list **1310**, the background of the intermediate view may reflect the appropriate album. In one example, if the user is in the album view and clicks on a thumbnail **1320** in the pick list **1310** that happens to be unsorted (i.e., not associated with an album), the display may switch to the time view.

According to one embodiment, hovering on a preview image **710** (in the single album view) or **830** (in the time view) will cause the preview image to enlarge slightly and two controls to appear, as shown in FIG. **14**. The pointer **126** indicates the user hovering on the preview image **1410**. These controls may include a delete icon **1420** and an "add to pick list" button **1430**. If comments are available for the content item associated with the preview image **1410**, the comments icon **1080** may also be displayed. Clicking on the "add to pick list" button **1430** adds the content item to the user's pick list **1310**. Clicking on the delete icon **1420** deletes the content item from the user's digital media library. In one example, clicking the delete icon **1420** also causes an informational "bubble" (not shown) to appear, letting the user know that the content item has been deleted. The bubble may remain on the screen for certain time period, for example, a few seconds, and may include an undelete button, giving the user the ability to undo the deletion of the content item. Conventional "undo" actions, such as pressing "CTRL-z" may also undo the deletion of the content item. The effect of deleting a content item on the underlying data in the cloud **330** may depend on whether the content item belongs to the user, or is an item that has been shared with the user by someone else. For example, if the content item belongs to the user, then deleting it may also delete the content item from the library stored by the online hosting service. If the content item belongs to someone else, deleting it in the user's digital medial library may remove the "map" or reference to that item, such that it is no longer displayed in the user's media library, but does not affect the underlying data in the cloud **330**.

Referring again to FIG. **13**C, in one example, clicking a "share" button in the pick list controls **1340** Clicking the Share button in the Pick List launches a share bubble **1360**, as shown in FIG. **15**. The share bubble **1360** may include several fields, including a name field **1362** where the user may name the content item or group of content items to be shared, and fields where the user may either select from the pre-set list of persons (field **1364**) those persons with whom the user wishes to share the items, or enter one or email addresses (field **1366**) of persons with whom the items are to be shared. The share bubble **1360** may also include a comments field **1368** where the user may enter comments about the items being shared or a message to the person(s) with whom the content items are being shared. Clicking the "share" button **1370** may complete the share action. A "cancel" button **1372** may be provided to cancel the share action; alternatively, simply clicking anywhere not on the share bubble **1360** may also cancel the share action. A similar share bubble may also appear when the user selects the share album control **612** in the album view discussed above.

The pick list controls **1340** may also include an "order prints" button to allow the user to order prints of the photographs in the pick list **1310**. According to one embodiment, clicking "order prints" button from the pick list **1310** shows the user options for ordering (such as print size, number of prints, etc.), and then places the order using information previously collected from the user, for example, during initial configuration of the portable computer **100**. According to another embodiment, clicking the "order prints" button from the pick list **1310** opens an ordering panel that provides the user with options for ordering prints from any of a variety of online photo service providers. The ordering panel may include weblinks that allow the user to navigate to the websites of the online photo service providers. The ordering panel may also include a "stop" or "cancel" button. In another embodiment, clicking the "order prints" button from the pick list **1310** automatically opens a webpage of the online photo hosting service where the user's digital media library is stored. Thus, the user may order the desired prints (or other merchandise) directly from the hosting service on which they are stored. In one example, using the "order prints" control does not clear the content items from the pick list **1310** in case the user wishes to perform another action with the items.

According to one embodiment, the pick list controls **1340** may also include a control to create or add a channel. In one example, selecting the create a channel control in the pick list **1310** creates a channel card containing the content items in the pick list. As discussed above, according to one aspect, streamlining the presentation and integration of features and services available through the portable computer **100** includes developing consistent visual representations of available content (whether on the computer **100** or from third party service providers). In one embodiment, system features and web features are consistently presented as cards for the user to interact with to achieve their computer objectives. In some embodiments, cards comprise part of an interface layer between a computer user and a user's computer based objective and/or computer operation. Thus, the cards form a part of the structure of the graphical user interface between a computer system and the user to provide access to a plurality of views and/or content. In various embodiments, cards are configured to be context and/or content sensitive. Thus, the cards are selectable visual representations that are mapped either to computer functions or available computer content. Some examples of cards include web cards that map to views of web content including web pages, channel cards that map to customized views of content including web based content and picture and video content, and system cards that map to system functionality. In one example, system cards are configured to represent activities that have been specifically designed such as for example, a digital media card.

Referring to FIG. **16**, in one embodiment, the home view **310** (see FIG. **3**) is configured to manage and organize cards. Thus, in one example, the home view **310** includes a body **1610** in which a plurality of cards **1620** are arranged. The home view **310** may also include a header **1630** which displays a home indicator **1640**, letting the user know that they are in the home view, **1640**, and optionally includes a web search bar **1650**, providing the user direct access to searching on the Internet. The home view **310** provides a simple and convenient mode of navigating through the features and content accessible through the device by organizing and managing cards. In some embodiments, channel cards provide additional features that enable a user to better interact with web based content, and in another example, channel cards provide interactive views by utilizing different content presentations provided by a web source. Thus, consistent user interfaces are used to access web based content, even content and applications provided by third parties.

According to one aspect, cards may have common features to promote user acceptance and improve adoption of different cards, while providing familiar a form. In one example, most cards are configured with a similar anatomy, and may comprise certain common elements described with reference to illustrated examples. According to one aspect, different cards types displayed in the home view are clearly defined by color scheme and appearance, while at the same time maintaining a similar format. For example the similar format includes header placement and sizing, display of tools, title and frame size. In one embodiment, a color scheme configured to differentiate card types provides for web cards with white headers with the content displayed on the web card showing as a thumbnail of the current state of the page. Channel cards may be configured with black headers, and the content presented in the channel card may comprise a simplified representation of the associated media or web content. System cards may be shown either with blue headers or grey headers.

According to one embodiment, the digital media aspect of the streamlined device is presented as and accessed through a system card **1620***a*. The digital media system card **1620** comprises a header **1660** running along the top of the card which identifies it as the digital media card, and a body **1670** which displays an image of one of the digital content items in the user's digital media library. In one example, the image displayed in the body **1670** is selected at random from the user's digital media library and may change periodically, for example, every few seconds or minutes. From the home view **310**, selecting (e.g., by clicking) the digital media card **1620** navigates to either the time view or the album view of the user's digital media library. The default view may be set in the card options, as discussed further below.

As discussed above, when the user selects the "create a channel" control in the pick list **1310**, a channel card is created containing the content items in the pick list. The channel creation process may be animated. In one example, when the user clicks the control button, the system zooms out of the digital media library view to the home view **310**, scrolls to the end of the displayed cards **1620** (if necessary), and shows the new channel card appearing, then scrolls back (if necessary) to where the digital media card **1620***a* is displayed in the home view, and zooms back into digital media view from which the user clicked on the control in the pick list **1310**. The whole animation may take a brief time; short enough to not be too annoying to the user, but long enough not to cause the user any vertigo.

According to one embodiment, the user may also create channel from online photo services (such as SMUGMUG or KODAK GALLERY). In one example, when the user creates a channel from one of these services, the option may be given to save the photographs to the user's digital media library. If the user decides to add the photographs to the digital media library, new photographs subsequently added to the feed from the online service may also be added to the digital media library. This automatic updating stops (i.e., no more photographs are added) if the user deletes the channel card or transforms it into a web card. Similarly, the user may transform a web card of an online photo service (such as FLICKR or SHUTTERFLY) into a channel card using the card options discussed below. In one example, when the user creates a channel card from one of these photo services, the option is again given to add the contents of the channel card to the user's digital media library. This allows the user to get the benefit of an aggregated media library on the portable computer, but without automatically cluttering it up with unwanted images. Content subsequently added to the channel may also be added to user's digital media library. If the user deletes the channel card or transforms it back into a web card, new content is no longer added to the digital media library, but the existing content may not be removed.

Referring again to FIG. **16**, the cards **1620** may include an "options" icon **1680** in the header **1660**. In one embodiment, when card configurations and/or card options are selected by a user (if available), e.g., by clicking the card options icon **1680**, a consistent animation is presented to the user. For example, selection of a card's options may cause an animation displaying the flipping of the card and the revelation of user selectable options. In one example, if the user clicks the card options icon **1680**, there is presented a visualization of the card turning over, similar to the animation/visualization of the item **1025** turning over to display the comments view discussed above. On the "back side" of the card **1620** the user may see various options which may differ depending on the type of card. Referring to FIG. **17**A, there is illustrated one example of the back side of a card **1620**. In the illustrated example, the card **1620** includes a header **1710** that displays an identifying field **1715** and optionally a logo or image **1720**, to identify the card to the user. In an example of a web card, the identifying field **1715** may include the name of the associated website and optionally some description of the card. For example, a web card for an online news service may display the name of the news service along with a description such as "local news" or "news headlines" that identifies the card for the user. The available options for the card **1620** are shown in the body **1725** of the card.

In the illustrated example, the body **1725** of the back side of the web card **1620***b* shows an option **1730** for transforming the card into a channel card, and vice-versa. In the example of a web card, if the user checks the option **1730**, the web card is recast into a channel card. Unchecking the option **1730** transforms the channel card back into a web card. The option **1730** may be displayed permanently checked for cards that are always available as channel cards (e.g., the digital media card **1620***a*, as shown in FIG. **17**B), and may be missing for cards that are not available as channels, for example, some system cards. In the example of the digital media card **1620***a*, the option **1730** may include an option to show the card as a channel using a particular lens. Thus, for the digital media card **1620***a*, the control **1730** may read "Show as channel using [lens], as shown in FIG. **17**B." A lens is a customized visualization for computer content, as discussed further below.

Still referring to FIG. **17**A, channel cards may include an option **1735** to show the card in a screensaver. Typically the screensaver option **1735** is not an available option for other card types; however, the digital media system card **1620***a* does permit its content to be displayed in the screensaver. In one example, the digital media card **1620***a* is added to the screensaver mode by default. In the channel view (discussed below) and screensaver mode, the digital media system selects photographs randomly from the user's digital media library. This allows the portable computer **100** to function like a smart digital picture frame by default when the device is idle. According to one example, new channel cards are configured to not display in screensaver mode by default and therefore, the option **1735** is not checked for new channel cards.

The card options may also include share information/controls **1740**. The shared information **1740** may include a "shared to/from" line which provides information on the user or device from which or with which the card was shared. Hovering over the "shared from" line causes the device to display an informational bubble with a list of people to whom the card was shared. Other options may be employed for

displaying shared from information. Other options may include linking to a display list for share from information, and in some embodiments may include displaying the shared entities on the back of the card without selecting the "shared from" line. In such embodiments a maximum number of shared entities may be displayed before requiring selection of a more control. The more control expands on the list of shared entities to provide for listings that do not fit within the space provided on the back of a card. A "shared to" line may provide information about whether and to whom the card has been shared. According to one embodiment, system cards can not be shared, thus no shared to information is displayed. By default the "shared to" line does not display until a card has been shared. In one example, hovering over the shared to line causes the device to display an informational bubble with the list of people to whom the card has been shared. Other options may be employed for displaying shared to information. Other options may include linking to a display list for share to information, and in some embodiments may include displaying the shared entities on the back of the card without selecting the "shared to" line. In such embodiments a maximum number of shared entities may be displayed before requiring selection of a more control (not shown). The more control expands on the list of shared entities to provide for listings that do not fit within the space provided on the back of a card. Optionally the more control may cause the device to display an information bubble containing the remaining shared entities and/or all the shared entities. The share information **1740** may also display the number of times the card has been shared. As discussed above, the user may share content items from the pick list **1310** with other users. In one example, sharing items from the pick list operates similar to sharing a channel card that contains only photographs and videos. The recipient receives a channel card on their streamlined device (or an email with a link to the channel card on a website if the recipient does not have a streamlined device.

Still referring to FIG. **17**A, for some cards the card options may further include a delete control **1745** which removes the card **1620** from the home view **310**. The delete control **1745** is typically not available for system cards, which typically can not be deleted by the user. The card **1620** may also show a "last updated" field **1750** that displays update information. For example, for a web card that streams news or other online content, the update field **1750** may display the last time the feed was updated, for example, "last updated 3 minutes ago" or "last updated at [date/time]." A "done" button **1755** may be provided that allows the user to turn the card **1620** back over to the front side view when the user is finished viewing/changing the card options. In one example, clicking the "done" button **1755** causes the system to display an animation of the card **1620** flipping over to show front side and zooming back out to the home view **310**.

As discussed above, another view of the digital media library which may be offered to the user is the lens view. The lens view is a group of visualizations, or "lenses," that the user can choose from and which offer the user different ways in which to experience and interact with their digital media libraries. The content displayed and the interactions available may depend on the individual lens. In one example, all or at least some of the lenses allow the user to add a particular picture to the pick list **1310**. The pick list may or may not be displayed in the lens view. In one example, lenses support passive viewing, i.e., they do not require user interaction to be effective since they can be applied to the channel view and screensaver mode.

According to one embodiment, by default, channel cards are displayed in the channel page view according to a predetermined visualization. For channels that comprise photographs and videos, including the digital media card **1620***a*, and channels created from online photo services such as FLICKR or SHUTTERFLY, lenses are also available to modify the visualization of the channel. According to one embodiment, the channel page view is the zoomed-in computer implemented expression of a channel card. The channel page view may be invoked by clicking on the channel card. A channel page view may present a unique view into content made available through a website. The channel page view employs visualizations similar to corresponding visualization on channel cards but the large format of the view allows for a better display of content, and provides for increased interaction with users. The channel page view also comprises a mapping from the display content to the source from which the content is derived. The channel page view comprises a number of elements that are maintained across the channel page views of different content, although in some examples additional features may be provided to address unique aspects of the content being viewed. An example of a channel page view is the album view illustrated in FIG. **5**.

As discussed above, and referring to FIG. **17**B, for the digital media card, the channel control may read: "Show as channel using [lens]" to allow the user to select a particular lens. The lens button **1760** may display the name of the currently selected lens. Clicking the lens button **1760** reveals controls, for example, a drop-down menu, for selecting a lens. In one example, when the user clicks on the drop-down menu to select a lens, the card **1620***a* and drop-down menu remain visible, but the rest of the home view **310** becomes obscured by a preview of the selected lens. Lenses may also be selected from any of the time view, album view, intermediate view, or lens view of the user's digital media library. For example, referring to FIG. **18**A, there is illustrated an example of the time view showing the lens button **1760**. The lens button **1760** displays the name of the currently selected lens. In one example, clicking on the lens button **1760** will switch to the lens view and show the current lens. Referring to FIG. **18**B, there is illustrated an example of a lens view. The lens view includes a header **1810** and a body **1820** in which an image **1025** of the content item is displayed. The lens button is shown as a drop-down menu **1830**, as discussed above, revealing a list of available lenses. The drop-down menu may be displayed responsive to the user clicking the arrow **1840** on the lens button. As the user moves through the list, an instant preview of the highlighted lens may appear in the body **1820** of the screen. Selecting a new lens from the list makes it the current lens, and changes the text on the lens button **1760** (see FIG. **18**A) to match.

One example of a lens is the slideshow lens. In one embodiment, in a channel page view, the slideshow lens automatically shows random images from the user's digital media library in the full screen view. Each image may be displayed for a predetermined period of time, for example, a few seconds. In another example, the images are shown as a forward moving series, as shown in FIG. **19**. In the example in FIG. **19**, the front image **1910** is shown for a few seconds, then replaced with the next image **1920** and the series "shifts forward" with a new image being added at the back of the line. In one example, the images displayed are selected from a particular album, and the system automatically scans through all the images in the album, randomly or in sequence. The photo display restarts again at the beginning when the end of the photo content is reached. From the slideshow, the user may navigate to any image in the digital media library.

FIG. **21**A, illustrates an example logical diagram of the behavior for the slideshow lens in the channel view. From

channel page view **2110**, selection of a menu button causes the device to display a content menu **2120**, over the present channel page view. Selection of the menu button from the content menu, causes the device to display the selected content item in a channel page view **2502**. The menu button may be a clickable button displayed on the screen (not shown in FIG. **19**) or may be a hardware button, such as a button on the keyboard **106** (see FIG. **1**) or one of the navigation buttons **122**, **124** discussed above. In one example, from the channel page view **2110**, operation of the scroll wheel **120** (see FIG. **4**), causes the device to display a channel selector view **2130**. The channel selector may allow the user to select different albums or different channels for display. It is to be appreciated that the navigations discussed in reference to examples of navigating through photo content in the channel page view and slideshow lens may be similarly applied to channel page views of cards other than the digital media card, optionally using lenses other than the slideshow lens.

In one embodiment, if the user presses the menu button while looking at a particular item, a content menu for the album to which that item belongs is displayed, as shown in FIG. **20**A. In one example, the content menu **2010** is configured to be responsive to manipulation of the embedded scroll wheel **120** discussed above. Manipulation of the scroll wheel **120** progress through the displayed content menu **2010**, and in response the system displays the selected content in the full view with preview text appearing below. Manipulation of the scroll wheel **120** causes the system to scroll through the photos in the current album. In one embodiment, the content menu **2010** transitions between selections by rendering the apparent movement of the entire content menu either to the left of the right depending upon the orientation of the manipulation of the scroll wheel **120**. Alternatively, the content menu is also responsive to arrow keys on the keyboard **106**. Depressing an arrow key causes the system to display the apparent movement of the content menu **2010** to the next item. In one example, if the image **1025** belongs to more than one album, the system shows the content menu for the first album. If the item does not belong to any album, the system may show the content menu for unsorted images. In another example, pressing and holding the menu button may cause a content menu to be displayed, allowing the user to scroll through and select a particular album. A prompt **1930** may be displayed, as shown in FIG. **19**, providing the user with instructions for changing the album.

According to one embodiment, if the user presses and holds the menu button, a contextual menu **2020** of all of the albums in the digital media library appears, as shown in FIG. **20**B. The user may then use the scroll wheel **120** to navigate to any of the albums. The contextual menu **2020** may display the title of the albums, along with a representative, first or random thumbnail **2030** of a content item in the album. In one example, pressing the menu button opens the selected album, showing the first image in full screen and proceeding to show the rest as usual.

According to one embodiment, channels for displaying video content and/or audio content operate with a different logical flow. In one example, additional interactivity is required to allow a user to, for example, stop a video, start a video from the middle, among other options. According to one embodiment, the streamlined device must be able to accommodate routine operations through manipulation of only a scroll wheel and a mouse, for example when the device is in an easel mode. It is to be appreciated that in other configurations the logical flow for the behavior of the channel view may be different, and may take advantage of addition input/output devices available in other device modes. Shown in FIG. **21**B, is an example of a logical flow for device/UI functionality, during the normal operation of a channel view of video content. At **2140** shown is a channel page view of video content. Select of button (e.g. one of the navigation buttons **122**, **124**), causes the device to display a contextual menu **2145**. The Contextual menu **2145** may include a visual representation of selectable options **2150**. The selectable options **2150** rendered may include at least a rewind/fast forward selector, resume selection, other episodes, etc. Selection of the rewind/fast forward selector invokes a timeline controller **2155** shown in the content page view **2160**. In one example, the time line controller **2155** is responsive to rotation of the scroll wheel **120**, providing fast forward in one direction and rewind in the other. From **2160**, selection of a navigation button causes the device to return the view to channel page view **2140**. Selection of "resume" from the options **2150** also causes the device to return the view to channel page view **2140**. Selection of other episodes from **2150** causes the device to invoke a content menu **2165**, which provides a selector view of available content for the channel. Selection of content **2170** from the selector view **2165** causes the system to play the selected content in channel page view **2140**. From channel page view **2140**, the device displays a channel selector **2175**, in response to operation of the scroll wheel **120**. The logical flow illustrated may be used for interactions with audio content as well, for example, to control playing of .mp3 or other audio files.

As discussed above, in one embodiment, the portable computer is configurable into different modes, including a laptop mode (in which the portable computer has a conventional laptop appearance), a flat mode, a frame mode, and an easel mode in which the base of the computer and its display component stand vertically forming an inverted "V," as discussed above. It is be appreciated that different user interface architectures may be invoked in response to different device modes. For example, a portable computer in laptop mode may display a home view **310** as discussed with respect to FIG. **16**, whereas when configured in Easel mode, user may be presented with a channel page view, for example, the slideshow view discussed above.

Referring to FIG. **22**, there is illustrated an example of the portable computer **100** configured into the easel mode. To convert the portable computer **100** from the laptop mode (or closed position) into the easel mode, the display component **102** may be folded away from the base **104**, in the same direction as to open the computer (i.e., to configure the computer from the closed position into the laptop mode) such that the base **104** and the display component **102** form an inverted "V" shape with the bottom of the base and the back of the display component face another, as illustrated in FIG. **22**. In the easel mode, the display screen **110** is visible and accessible on one side of the portable computer **100** and the keyboard **106** (not shown in FIG. **22**) is visible and accessible on the other side. Having the portable computer **100** be configurable between different modes supports the presentation of computer content using visual representation optimized for different viewing modes. In particular, ones of the visual representations are configured to display in a "lean forward" user viewing mode and a "lean backward" viewing mode. In one example, a lean forward user viewing mode includes a user typing at a keyboard of a laptop computer. In another example, a lean backward user viewing mode includes a user viewing a television from a distance. One should appreciate that the examples provided are illustrative and are not intended to be limiting. The configurable portable computer **100** permits a user to select a device configuration most suited to a particular user viewing mode. According to one embodi-

ment, the easel mode of the device permits improved "lean back" interactions with computer content. In other words, the easel mode makes it easier to view the streamlined device's display from distances greater than conventionally used with laptop computers.

According to one embodiment, the function or display content and/or display orientation of the portable computer may vary when the portable computer is configured from the laptop mode into the easel mode, or vice versa. Thus, selection of a lean backward user viewing mode at triggers the portable computer **100** to transition to a content display that improves user interaction in that mode. For example, in response to configuring the device into the easel mode, the computer system display may transition to a channel viewing mode. The channel viewing mode is configured to present computer content, in large footprint displays, and further is designed to streamline user interaction with the streamlined device by permitting access through a first I/O profile associated with the streamlined device in easel mode. The first I/O profile in easel mode may consist of a scroll wheel and a selector button. In some embodiments, the first I/O profile may include a volume control. In another example, for at least some activities within at least some modes of content (e.g., viewing a photograph or video), when the portable computer **100** is configured into the easel mode, the display may automatically adjust to "full screen view" (i.e., the displayed image or video is displayed on the full screen size, rather than in a window) to allow for comfortable viewing.

In addition, in one embodiment, when the portable computer **100** is configured into the easel mode, the visual display on the display screen **110** is automatically rotated 180 degrees such that the information appears "right-way-up," even through the display screen is upside-down compared to when the portable computer is in the laptop mode. Thus, a user may simply "flip" the portable computer **100** into the easel mode and immediately be able to comfortably view information on the display screen **110**, without having to access display screen controls to adjust the orientation of the visual display. The ability to configure the portable computer **100** into either the laptop mode or the easel mode provides enhanced functionality. For example, when the portable computer **100** is not being actively used, the user may configure the portable computer into the easel mode, and program the portable computer to act as a digital photo frame, displaying one or more photos of the user's choice. In the easel mode, the portable computer **100** may occupy a smaller footprint on a surface than in the laptop or closed modes because the base **104** and display component **102** are upright, as illustrated in FIG. **22**. In addition, because the portable computer can act as a passive information and/or entertainment device, such as a photo frame, as discussed above, the portable computer may provide a useful function even when not being actively used by the user, and may do so (in the easel mode) without taking up much surface area.

In another example, the portable computer **100** may be configured into a "frame" mode, as illustrated in FIG. **23**, in which the portable computer is placed on a surface **2310** with the keyboard **106** "face down" on the surface **2310** and the display **110** facing upward. In the frame mode, the display component **102** may be at a similar orientation, and angle **2320**, with respect to the base component **104** as in the easel mode. However, rather than the base component **104** and display component **102** being oriented vertically with respect to the surface **2310**, as in the easel mode (in which the portable computer forms an inverted "V" as discussed above), in the frame mode, the base component **104** may lie flat on the surface **2310**, as shown in FIG. **23**. In one example, software and/or hardware protection may be provided for the keyboard to prevent keys from being pressed (or to prevent the portable computer from responding to pressed keys) when the portable computer is in the frame mode.

According to some embodiments, the streamlined computer system/device includes a plurality of I/O devices that a user needs to operate and transitions between modes (e.g. frame and easel) triggers the presentation of different I/O profiles to the computer user. One should appreciate that the various I/O profiles can be selected through physical configuration of the device. By providing the user the ability to change from a first I/O profile to another, at will, improves the user experience and permits the user to dynamically select a preferred I/O profile best suited to the user's present need. According to one embodiment, user selection of I/O profile includes transitioning from a lean back mode to a lean forward mode and vice versa. In one embodiment, the user's computer device is configured to have multiple I/O profiles that can be selected by physically manipulating the orientation of the computer device itself.

According to one aspect, streamlining user interactions with the computer system/device includes representing computer based content in visual representations that render computer operations/behavior in a consistent manner. The visual representations are adapted to permit easy user interaction even upon selection of a first I/O profile or the change in selection of an I/O profile. According to one embodiment, the visual representations are rendered as cards. Different types of cards may be employed to render different types of available content. For example, web based content, may be rendered as a web card that associated with a mapping to web content. Some web cards map directly to web pages and in response to selection of the web card the computer device executes the mapping and displays a web view of the content. Other cards may be used to provide interactive displays selectable by a user. In another example, system operations are displayed as system cards, which are associated with mappings to system operations, for example communications configurations, and may comprise a settings card, among other system options. Another type of card includes a channel card configured to stream web based content in a manner that allows for summarization of content, while still providing the ability to fully appreciate the summarized content.

In one example, a streamlined hardware device provides for (in comparison to typical desktop and laptop systems) a reduced user input platform as a first I/O profile, comprising in one configuration a scroll wheel and a button interface. Other I/O profiles are available for user selection by manipulation of the device itself. In one embodiment, an easel mode presents the user with the first I/O profile and by rotating the computer device about a longitudinal axis; the user may select a second I/O profile, including a keyboard (e.g. laptop mode). The transition from one I/O profile to another may also cause the computer device to alter its display. In one example, the user interface provided to the user is responsive to selection of device mode and/or selection of I/O profile.

It is to be appreciated that reducing the number of I/O device achieves simplicity of design and ease of operation by the user, and at the same time may increase the complexity of the graphical user interfaces needed to support interaction with systems and third parties that anticipate, rely on, or expect additional I/O devices. Streamlining device operation by the user is balanced against sophistication of user the interface required to enable user interaction with the same features used with additional I/O devices. According to one embodiment, the user interface layer provides simplified accessibility based on the device's I/O platform, and for some

embodiments, the user interface layer is responsive to device configurations that change the device's I/O capabilities. In other embodiments, the user interface is responsive to changes in the device's mode. In some examples, changes in device mode and changes I/O profile will occur together, however, in other examples a change in mode or a change in I/O profile will not require a corresponding change in profile or mode respectively.

Referring to FIG. **30**, there is illustrated another configuration of the portable computer **100**, referring to as the "flat" mode. In the flat mode, the display component **102** may be rotated (or opened) to approximately 180 degrees with respect to the base component **104**, such that the base component and display component lay flat on a surface, with the keyboard **106** and display screen **110** exposed, as shown in FIG. **30**. Unlike the easel and frame modes, in which the keyboard may be concealed and not easily accessible, in the flat mode, the keyboard is accessible and usable. In addition, as discussed above, the visual display on the display screen **110** may be automatically rotated to accommodate comfortable viewing of information by persons located in different positions relative to the base component **104** or display component **102**. The visual display on the display screen **110** may also be manually adjusted by a user using, for example, the keyboard **106**, touch pad **108** or mouse (not shown), scroll wheel **122** or navigation buttons (not shown). For example, if a user (located at position A) wishes to display information for a person located opposite the user (at position B), the visual display may be rotated (automatically or manually) 180 degrees such that the information appears "right-way-up," to the person at location B, even through the display screen **110** is upside-down for that person. Similarly, in another example, the visual display may be rotated (automatically or manually) 90 degrees such that the information appears "right-way-up," for a person at location C. In one example, a user can "toggle" the visual display among various orientations. For example, a user at location A may have the visual display facing themselves while using the keyboard **106** or other controls to change or access information on the display, then toggle the display orientation 180 or 90 degrees to display the information for persons at locations B or C.

According to another aspect, system and interface streamlining may be employed with devices of multiple configurations. In some embodiments, multiple configurations include a traditional configuration, for example, a configuration similar to a laptop device, and also include new configurations, for example, an easel mode. Some examples of streamlined devices have the ability to change between traditional configurations and other configurations. The change between configurations may change the I/O profile of the device and hence impact the user's interaction with the device itself and any content displayed on the device. In one embodiment, the user interface is responsive to changes in configuration. In another embodiment, the user interface is responsive to changes in I/O profile.

According to another aspect, the streamlining of the user's multi-media experience incorporates the device the user uses to interact with multi-media sources, whether the sources are on-line or provided by the device itself. Streamlining of the device includes developing consistent user interfaces for the user to access all features presented. The device's graphical user interface layer is customized to the I/O interfaces provided. In one example a device is provided in the form of a portable computer configurable between a laptop mode (in which the portable computer has a conventional laptop appearance) and an easel mode in which the base of the computer and its display component stand upright forming an inverted "V," a closed mode, a laptop mode, an easel mode, a flat mode and a frame mode. According to one embodiment, each of the display modes may employ different I/O profiles.

In some embodiments, multiple configurations include a traditional configuration, for example, a configuration similar to a laptop device, and also include new configurations, for example, an easel mode. Some examples of streamlined devices have the ability to change between traditional configurations and other configurations. The change between configurations may change the I/O profile of the device and hence impact the user's interaction with the device itself and any content displayed on the device. In one embodiment, the user interface is responsive to changes in configuration. In another embodiment, the user interface is responsive to changes in I/O profile.

Referring again to FIG. **16**, the computer system may include various system cards that map to computer functionality. Functionality mapped to by system cards may include, for example, a communications card, for configuring wireless access of the device, bookmarks for presenting conventional styled web page bookmarks, and a camera card for providing for configuration and operation of a camera, either embedded in the device upon construction, or incorporated through for example a USB port. According to one embodiment, a camera system card **1622** may provide a user with an easy way to get digital photographs and/or videos off their digital camera and stored safely in the cloud **330** with their online hosting service. The camera card may provide information and support during each stage of the process: before, during and after a digital camera is connected to the portable computer **100** and the content items uploaded to the cloud **330**.

Digital cameras typically present themselves to computers as storage devices. In many cases, the portable computer **100** may not be able to distinguish between a digital camera, a memory card reader, a USB drive, or other attached storage devices. Therefore, according to one embodiment, the camera card treats all such devices in the same way. Thus, the camera card may support the upload of images and videos regardless of the type of devices on which they are stored. Accordingly, although the following discussion may refer primarily to a camera, the term "camera" is intended to be synonymous with digital camera, card reader, USB drive, or other attachable storage device.

According to one embodiment, when a camera is attached to the portable computer **100**, the camera card becomes available in a channel view, where it displays images on the card using the slideshow lens. However, it will be appreciated that the camera card may also become available in the home view or another view, and may display the images using a lens and/or view other than the slideshow lens. When no camera is attached to the portable computer, the camera card may nonetheless be visible in the home view **310**. Selecting the camera card may "open" the card into a "page view" (i.e., the card is viewed full screen) and may display instructions/information about connecting a camera to the portable computer **100**. When a camera is first attached to the portable computer **100**, the system may zoom into the camera card and present the user with several options. For example, the user may be able to upload all the images from the camera to the online photo hosting service, allowing the system to create default albums. Alternatively, the user can customize the upload by adjusting albums and selecting from multiple online services, as discussed further below. In another example, the user can simply view the images that are on the camera, without necessarily initiating an upload. In one embodiment, while photos and/or videos are being uploaded to the cloud **330**, the user can continue to review images on the camera card. As discussed

further below, the user may also see the upload progress both in the camera card and in the digital media card **1620***a*. The presence of a camera attached to the portable computer need not constrain the user's access to the rest of the system. The user may simply navigate away from the camera card to interact normally with the portable computer and use its other functions.

Referring to FIG. **24**, there is illustrated an example of a page view of a camera card **1622** showing an upload of images **2410** in progress. The camera card **1622** includes a header **2415** and a body **2420** in which the images **2410** are displayed. The header may include information that identifies the card **1622** as the camera card and, when a camera is connected to the portable computer **100**, information **2425** that identifies the connected camera (e.g., a make/model of the camera). The header may also include status information **2430** that tells the user the current activity being performed by the camera card, for example, "saving new photos and/or videos." The header may also include a "stop" control **2435** that allows the user to stop the saving/upload process, as well as a display control **2440** that allows the user to, for example, cause the camera card to display the images **2410** using the slideshow lens. In the body **2420**, a status indicator **2445** may inform the user of the progress of the save/upload process. For example, the status indicator **2445** may tell the user that 34 of 70 content items have been processed and the save is 50% complete.

In one embodiment, clicking on an individual image **2410** on the camera card **1622**, regardless of the stage of the upload process, may bring the user to the intermediate view, as shown in FIG. **25**. The other images re-arrange themselves to form a horizontal line of images sorted by the date the items were taken with older items to the left. The intermediate view for the camera card **1622** is similar to the intermediate view for the digital media card **1620***a* discussed above. In one example, in the intermediate view for the camera card **1622**, the user options may include the ability to edit a caption for the selected image **2410***a* by typing into the caption field **2450**. The date field **2455** displays the date of the image underneath the caption area. In one example, if the user clicks on the date field **2455**, it becomes editable, allowing the user to correct the date in case the camera does not have the correct date, as discussed above. If the user corrects the date and saves the changes, the system may then prompt the user to see whether it should change the dates for the rest of the contents of the camera by the same offset. The intermediate view of the camera card **1622** may also include a rotate option **2460** which may allow the user to rotate the image **2410**, as also discussed above. In one example, each click on the rotate button **2460** rotates the image (either clockwise or anti-clockwise) by 90 degrees, and the user may thus click as many times as necessary to rotate the image by the desired amount. A delete option **2465** deletes the item from the camera card, after prompting the user to confirm the delete. As in intermediate view in the digital media application, the user can navigate between photos and videos by clicking on the left or right navigation bars **2470**, or by using the arrow keys or other controls as would be recognized by those skilled in the art. In one example, clicking anywhere on the image **2410** shows the image full-screen. The header **2415** may also include controls for deleting items (control **2475**), creating a new album (control **2480**) and saving (control **2485**), each of which is discussed further below.

When no camera is connected to the portable computer **100**, or when the system does not see a camera, it may be in one of two states: normal or interrupted upload (discussed below). According to one embodiment, in the normal state, the camera card **1622** on the home view **310** displays a generic camera image, and selecting the camera card may display some helpful information about how to connect a camera to the portable computer, as discussed above. By placing the camera card on the home view **310**, even when no camera is connected, the capabilities of the camera card application are highlighted. For example, a user, upon seeing the camera card, may be reminded to connect a camera to the portable computer, making it more likely that the user will use the portable computer for managing digital media content items.

According to one embodiment, when a user attaches a camera to the portable computer **100**, the user sees an animation of the system going to the home view **310**, scrolling as necessary to the page containing the camera card **1622** (which may show thumbnails of the content of the camera), then zooming into the camera card. In one example, if the user has already selected the camera card and is viewing the camera card in the page view prior to connecting the camera, this animation may not show. Once in the page view for the camera card, the user can see the contents of the attached camera, and may be given options for what can be done with the content on the camera. These options may be displayed, for example, in a bubble that appears over the line of images **2410**. In one example, the options include a simple save and an advanced save. The simple save option may save the contents of the camera card to the user's online photo hosting service with automatically created albums. If the user has registered more than one online hosting service, the user may select the desired service from a drop-down menu. The advanced save option provides the user with the opportunity to manipulate the automatically saved sets, delete photos, and/or save photos to multiple online hosting services, as discussed further below.

In the page view, as shown for example in FIG. **24**, the user can interact with the images on the camera. This interaction may be similar to interacting with digital content items in the time view or album view discussed above. As discussed above, the user is free to interact normally with the entire system even when a camera is attached, and is not required to first complete any action associated with the camera card. For example, if the user returns to the home view **310** without initiating an upload of images, the camera card **1622** shows thumbnails **2620** of the images on the attached camera, as shown for example in FIG. **26**. The header **2415** of the camera card may also display the number **2610** of new content items on the camera.

According to one embodiment, once a user has connected a camera to the portable computer **100** and is brought to the camera card, the user may rely on the system to create albums by selecting the simple save option. The upload process then begins, as discussed further below, using automatically-generated albums and saving images to the user's registered online photo hosting service. If there is more than one photo hosting service associated with the portable computer, the simple save option may default to the service that was used during the last upload. Some existing photo hosting services do not support video content. Accordingly, the portable computer may provide video storage services, either locally or through the cloud **330**. Accordingly, users may have more than one service associated with the portable computer **100**; however, the difference between the photo hosting service and the video hosting service may be seamlessly transparent to the user. In one example, in the simple save mode, by default, "delete items from the camera when they are safe" is

checked. If a user prefers to leave the images on the camera, the user can uncheck this box before initiating the simple save option.

As discussed above, in one embodiment, the system may save the user time and effort by automatically organizing digital content items, including photos and videos, into albums. In one example, albums are created by date, with photos and videos taken on the same day going into a single album. If a set of photos are close in time (e.g., are taken within 90 minutes or so of each other) but span two days, the album may span those two days as well. For example, it may not be uncommon to see images taken just before and just after midnight on New Year's Day, and these images may be grouped into a single album. In one example, automatically generated albums may not contain fewer than a predetermined number of images, for example, five images. In the case that fewer than five photos for a single date are on the camera (or if there are fewer than 5 photos total on the camera), the photos may appear in the unsorted photos area discussed below. In one example, the default name of the automatically generated album is the date (or date range) on which the content items were taken.

As discussed above, an alternative to the simple save option is the advanced save option. Selecting the advanced save option may bring the user to a "choose & organize" screen, an example of which is illustrated in FIG. **27**. From the "choose & organize" screen, the user may organize digital content items before uploading them. Referring to FIG. **27**, in one example, the "choose & organize" screen has four main areas, namely, albums **2710** which may appear at the top of the list and comprise automatically generated albums and/or albums that the user creates manually; unsorted photos **2715**, videos **2720**; and previously uploaded content **2725** which may appears at the end of the list. The "choose & organize" screen may also display a new content indicator **2730** which tells the user the number of new photos and videos on the camera. In one embodiment, automatically generated albums (discussed further below) are arranged in chronological order starting with the newest album at top. It is to be appreciated that although only one album **2710** is shown in FIG. **27**, the "choose & organize" screen may display any number of albums. A scroll bar (not shown) may be used to scroll up and down the page if there are more albums than can be displayed at one time on the screen. In one example, if the user corrects the date of items in an automatically generated album, the album date may update to reflect the change, and the order of the albums in the list may be automatically updated. Each album **2710** includes an album title **2735** and thumbnails **2740** of the content items included in the album. When the user hovers over any part of an album **2710**, that album may become active. When an album **2710** is active, the album title **2735** becomes an editable field, and a "dissolve album" button (not shown) is revealed. In one example, clicking the "dissolve album" button causes all the photos from that album to be placed into the unsorted photos area **2715**.

According to one embodiment, "unsorted photos" (i.e., those not associated with an album) are displayed in the unsorted photos area **2715**. The unsorted photos area **2715** includes a header **2745** identifying the area to the user, and also includes thumbnails **2740** of all items included in the unsorted photos area. In one example, when the camera is first attached, the unsorted photos area **2715** may be empty. A user can drag individual photos out of albums **2710** into the unsorted photos area **2715**. As discussed above, a user can also click the "dissolve album" button (not shown) on an album **2710**, thereby sending all the photos in that album to the unsorted photos area **2715**. The user can also drag photos from the unsorted photos area **2715** into an album **2710**. The videos area **2720** may similarly include a header **2745** identifying the area to a user, and thumbnails **2740** of an image of each video.

In one embodiment, if a user clicks the "new album" control button **2480** in the header **2415**, a new album is added to the top of the list, pushing other albums down. When the new album appears, the title **2735** of the album may be pre-populated with "new album," but this title may also be selected/active so that the user can simply start typing to replace it. The user can then drag individual photos from other albums or from the unsorted photos area **2715** into the new album. The new album control **2480** may also be selected from the intermediate view, as shown in FIG. **25**.

From the "choose & organize" screen a user may also delete items, such as, for example, out-of-focus or unflattering photos. In one example, the camera card supports batch deletion. This process may also provide the user with a safety net, making it more difficult to delete a content item by accident. In one example, when the user hovers over an individual thumbnail **2740**, a check box labeled "delete" (or similar language) appears, and once the user checks the box, the image dims. The check box (without the "delete" label) may remain visible after it is checked, even if the user moves the cursor away from the item, making it very visually clear how to reverse the action. Un-checking the box may return the item to full saturation. When the user marks one or more items for deletion, the control buttons **2480** and **2485** in the header **2415** may be replaced with an "unmark all" option. The "delete all" control **2475** may remain or be replaced with "delete marked items." If user selects the "unmark all" control, all the items marked for deletion are unmarked. Selecting the delete control **2475** deletes the marked items and the thumbnails **2740** are removed from view. The remaining thumbnails **2740** may then rearrange themselves appropriately. The user can also delete items from the intermediate view shown in FIG. **24**. In some cases, the camera (or other media device) that the user connects to the portable computer **100** may be locked or otherwise write-protected, making deletion impossible. In this case, the delete buttons (in the header **2415** and overlayed onto the thumbnails **2740**) are dimmed, and information may be included in the header **2415** that indicates that the camera is locked. In this state, if the user hovers over the dimmed "delete all" button **2475** in the header **2415**, a message may be displayed, such as "no deletion possible because the memory card is locked."

Still referring to FIG. **27**, the user may move digital content items among different albums **2710** and to and from the unsorted photos area **2715**. For example, the user can drag photos between albums **2710**, from albums **2710** to the unsorted photos area **2715**, or from the unsorted photos area into albums. When the user drags a photo, other thumbnails **2740** on the screen rearrange themselves to accommodate the added/removed item. In one example, because videos are saved separately from photos, the user may not be able to drag videos from the video area **2720** into albums **2710**. Similarly, the user may not drag a photo into the video area **2720**. In one example, if the user attempts to drags a photo to an unavailable location (such as the videos area **2720** or previously uploaded items area **2725**), the photo snaps back to its original location.

In one embodiment, if the user has previously uploaded items from a camera, but elected not to delete them, they appear in the "previously saved" area **2725**. If there are no items that have been previously uploaded from the user's camera, the previously saved area **2725** may not appear. The previously saved area **2725** includes a header **2750** which

identifies the area to the user, and may also display the number of previously uploaded content items that are on the camera. The previously saved area **2725** may initially not display thumbnails of the items, but instead display a "show items" button **2755**. Clicking the "show items" button **2755** may reveal thumbnails of the previously uploaded items. The user may then select individual items to delete, or may drag photos from this area into albums **2710** or drag videos to the videos area **2720**. If the user drags an item to an album **2710**, the underlying behavior of the system on upload depends on the associated online photo hosting service. For services that use an "image stream" concept and therefore allow individual images to appear in multiple albums (e.g., FLICKR), the image may be added to the album using the camera card interface, but not uploaded again. For other services, the image may be uploaded again into the new album.

According to one embodiment, clicking on a thumbnail **2740** brings the user to the intermediate view, shown, for example, in FIG. **25**. Clicking anywhere in the background may return the user to the standard view of the "choose & organize" screen. When the user has organized the digital content items to his/her satisfaction, the user may click the "save . . . " control **2485** in the header **2415**. In one example, clicking the save control **2485** causes a modal page bubble **2810** to appear, providing the user with options for saving, as shown in FIG. **28**. The user may elect to save or not save each individual album, as well as unsorted photos and videos using the check boxes **2815**. In the illustrated example, a check box is included with each column header to allow the user to quickly select all items in that column. If the user has registered more than one photo or video host service, a column may be provided for each service, identified by name. The user may then elect to save each individual album to one, all, or none of the services, using the appropriate check boxes. In one example, the system warns the user about potential restrictions a photo host service may place on videos (e.g., size, format, etc.), allowing the user to use that information in selecting where the videos are to be saved. A check box **2830** may be provided to given the user the option of whether or not the system will delete items from the attached camera after the items have been safely uploaded. In one example, deleting the items upon successful upload is selected by default. If the user does not select a service for a set of items (e.g., one or more albums, unsorted photos, or videos), the system will leave those items—they will not be uploaded, but they will also not be deleted from the camera. In this case, the information about the album (e.g., its contents and title) may be retained until the camera is disconnected from the portable computer. Thus, once the upload process for the rest of the items is complete and the user returns to the "choose & organize" screen, the album is still as the user arranged it. The bubble **2810** may further include a "cancel" button **2840** to allow the user the cancel the upload and return to the "choose & organize" screen, and a "save" button **2850** to initiate the upload process.

According to one embodiment, once the user initiates the upload process, by selecting either the simple save or advanced save option, the portable computer **100** begins uploading the digital content items to the cloud **330**. As discussed above, the user may see the progress of the upload on the camera card. The user may also upload digital content items from within the digital media card **1620***a*. For example, the user may use the time view or album view to locate content items to upload, for example, to a social networking site or another online hosting service. In one example, the upload may be initiated from the user's pick list discussed above. Whether the upload is initiated from the camera card or the digital media card, the user may see information regarding the status of the upload, for example, whether each content item has been saved, how much progress has been made on the upload, which online hosting service the content item is being uploaded to, etc. In one example, during upload, the camera card displays the images being uploaded, with the current image shown enlarged. In one example, the user can interact with the images during the upload process. This interaction may behave similarly to the single album view in the digital media application discussed above.

In one example, all content uploaded on the user's behalf may be marked as "private" or the equivalent on their photo hosting service. This default behavior protects the user's privacy and keeps others from viewing the user's content without the user's permission. It is to be appreciated; however, that other default options may be implemented, and the user may be prompted to identify content as private or public, or equivalents thereof.

According to one embodiment, if the user has elected to have images deleted from the camera after upload, then each content item is deleted as soon as it is uploaded into the cloud **330**. In one example, the user can still see the content items in the context of the camera card, however, until the camera is disconnected from the portable computer **100**. Referring to FIG. **24**, in one example, if the user clicks the "Stop saving" button **2435** in the header **2415**, the upload stops and the system then returns the user to the initial screen as though the camera had just been attached. In this instance, content items that have already been uploaded and deleted from the camera are no longer included. The content item that was in process when the user clicked the "Stop saving" button **2435** will not have been deleted from the camera yet and may therefore appear. In another example, if the user had elected not to delete content items from the camera (e.g., by unchecking box **2830**, content items that have already been uploaded may appear in the previously saved area **2725**.

Once the upload is complete (i.e. the digital content items are safely stored in the cloud **330**), the system may display an informational bubble letting the user know it is safe to remove the camera. The user may then be returned to the camera card page view (if the simple save option was used) or to the "choose & organize" screen if the advanced save option was used. In either case, the system recognizes that the content items have been uploaded. If the content items have been deleted from the camera, they no longer appear in "choose & organize" screen, and if they have been left on the camera they appear in the previously saved area **2725**. Once the camera is disconnected, or the user navigates away from the camera card after an upload, the newly uploaded content items may become indistinguishable from previously stored items in the digital media library.

In some instances, the upload process may be interrupted before it is complete. For example, the camera may run out of power, the portable computer may lose its connection to the cloud, or the user may disconnect the camera before the upload is complete. In one example, in the event of an interrupted upload, the camera card displays a warning and information about the state of the upload and/or camera. From the page view of the camera card, the user may elect to stop the upload or cancel the message, retuning the system to the "no camera connected" state. In one example, if the user elected to stop the upload and subsequently reconnects the camera, the camera card will behave as though it were the first time that camera is being connected. Alternatively, if the user elected instead to cancel the "saving interrupted" message, the camera card may resume uploading the digital content items the next time the user connects the camera. If the user has taken

some new photos during the time when the camera was disconnected and then reconnected, the new photos may be automatically uploaded when the camera is reconnected. Alternatively, the use may be given the option to upload the new photos or not, or may navigate to the "choose & organize" screen to select certain photos for upload. Any digital content items not uploaded may remain on the camera and be treated as new photos the next time the camera is connected to the portable computer.

As discussed above, in one embodiment the portable computer **100** is configurable into an easel mode. One example of the camera card behavior when a camera is connected to the portable computer in the easel mode is shown in diagrammatic form in FIG. **29**. In this example, the camera card becomes the current channel **2910** and a camera menu **2920** is displayed to give the user the opportunity to save the contents of the camera (**2930**) or view the contents as a slideshow (**2940**). In one example, the save behavior is similar to the simple save behavior discussed above in that the system may save new items using automatically generated albums. In another example, if the user elects to save the contents of the camera, the upload begins. In one example, each content item is shown in full screen as it uploads, with an indication of its progress. In one example, the portable computer will not enter the screensaver mode during an upload. As in other examples discussed above, the user may continue to interact with the system during the upload. For example, the user may view other channels, and can navigate back to the camera card channel to view the progress of the upload. Once the upload is complete, a notification may be displayed to the effect that it is safe to disconnect the camera. In one example, this notification remains as long as the camera is still attached to the portable computer, but may be displayed in a corner or other unobtrusive location. In one example, when the user disconnects the camera, the camera card is no longer available as a channel. According to one embodiment, if an upload has been interrupted and the user reconnects the camera to the portable computer in the easel mode, the upload resumes in the background without notification. If there are no new images on the camera, the user may only be given the option to see a slideshow of the images on the camera.

Having thus described several aspects of at least one embodiment, it is to be appreciated various alterations, modifications, and improvements will readily occur to those skilled in the art. Such alterations, modifications, and improvements are intended to be part of this disclosure and are intended to be within the scope of the invention. Accordingly, the foregoing description and drawings are by way of example only, and the scope of the invention should be determined from proper construction of the appended claims, and their equivalents.

What is claimed is:

1. A method for accessing and managing digital media libraries on a streamlined computing device with a plurality of selectable I/O profiles, the method comprising:

displaying a graphical user interface on the computing device, wherein the graphical user interface comprises at least a plurality of views of digital media content;

providing for transition between the plurality of views in response to selection of an I/O profile;

providing for transition between the plurality of views in response to activation of a view selector component configured to permit a user to select one of the plurality of views, wherein providing for the transition between the plurality of views in response to selection of the I/O profile includes:

permitting the user to rotate a display component of the computing device about a longitudinal axis running along an interface between the display component and a base of the streamlined computing device;

wherein rotating the display component about the longitudinal axis from a closed mode to a first physical orientation configures the computing device into a laptop mode having a first physical configuration of the display component and the base, with one of the plurality of views as a default display; and

wherein rotating the display component about the longitudinal axis from the closed mode to a second physical orientation configures the computing device into another display mode having a second physical configuration of the display component and the base, with another one of the plurality of views as the default display;

associating at least one of a plurality of visual representations with digital media content;

executing the association with the at least one of the plurality of visual representations with digital media content in response to selection;

transitioning a display on the computing device to a view of the digital media content in response to the act of executing the association; and

providing for display of user digital media content and referenced digital media content in the view of the digital media content.

2. The method according to claim **1**, further comprising an act of displaying in the view user digital media content and referenced digital media content in response to the act of executing the association with the at least one of the plurality of visual representations.

3. The method according to claim **2**, wherein the act of displaying in the view user digital media content and referenced digital media content includes an act of accessing a reference to remote digital content not controlled by the user in order to display referenced digital content.

4. The method according to claim **1**, further comprising an act of associating the at least one of the plurality of visual representations with a remote service provider.

5. The method of claim **4**, further comprising an act storing the association between the at least one visual representation with the remote service provider in at least one of a device profile and a user profile.

6. The method according to claim **1** further comprising acts of:

configuring access to a remote service; and

integrating operations provided by the remote service provider into the view of the digital media content.

7. The method according to claim **1**, wherein the view comprises at least one of an album view and a timeline view.

8. The method according to claim **7**, further comprising an act of displaying digital media content in a body portion of the view.

9. The method according to claim **7**, further comprising an act of displaying a toggle element in a header portion of the view, wherein the toggle element transitions the computing device display between the album view and the timeline view upon selection by a user.

10. The method according to claim **7**, further comprising acts of:

displaying emulation controls responsive to selection by the user; and

emulating standard computer operations for referenced digital media content displayed in the view, wherein the act of emulating standard computer operations includes:

an act of determining if the user has authority to perform the standard computer operations,

determining the user does not have the authority to perform the standard computer operation on a source of the referenced digital media content, and wherein the act of displaying the emulation controls occurs in response to the determination that the user does not have the authority.

11. The method according to claim **10**, wherein the standard computer operation includes an act of deleting digital media content, and the method further comprises an act of altering the view of the digital media content so the digital media content marked for deletion is not displayed within the view.

12. The method according to claim **11**, further comprising an act of generating a state entry, associated with at least one of the view and the source of the referenced digital media content.

13. The method according to claim **12**, further comprising an acts of:

accessing any state entry for at least one of the view and the source of referenced digital media content; and

displaying referenced digital media content according to any state entry requirement.

14. The method according to claim **10**, wherein the standard computer operation includes an act of editing referenced digital media content, and the method further comprises an act of generating a state entry reflecting any edits made to the referenced digital media content.

15. The method according to claim **7**, further comprising acts of:

providing an aggregation component configured to permit the user to select a plurality of digital media content;

displaying the plurality of digital media content in the body of the view; and

permitting the user to perform operations on the plurality of digital media content.

16. The method according to claim **15**, wherein the act of permitting the user to perform operations on the plurality of digital media content includes at least one of a share operation, a create channel operation, and an order prints operation.

17. The method according to claim **16**, wherein the at least one operation is a share operation, and the method further comprises acts of:

identifying any state entries for the plurality of digital media content;

identifying any remote service settings for the plurality of digital media content; and

transmitting a visual representation associated with the plurality of digital media content, any state settings, and any remote service settings to another streamlined device user.

18. The method according to claim **7**, wherein the view is a time view and the method further comprises:

displaying a timeline navigation control in the body of the view, wherein the timeline navigation control is configured to provide organization segments, the organization segments providing a visual indication of a number of digital media content items in each segment.

19. The method according to claim **18**, wherein the timeline navigation control further comprises a handle responsive to a pointer displayed on the computer device, wherein the handle is further responsive to select and drag operations.

20. The method according to claim **1**, further comprising acts of:

permitting the user to share the at least one visual representation, including any associated digital media content with another user;

storing shared information in response to an act of sharing by the user; and

updating any associated digital media automatically for the another user, wherein the act of updating any associated digital media includes acts of:

identifying any changes in shared digital media content, wherein changes include at least one of addition of digital media content associated with the at least one visual representation, deletion of digital media content associated with the at least one visual representation, edits of digital media content associated with the at least one visual representation, and updates of information associated with digital media content associated with the at least one visual representation.

21. The method according to claim **1**, further comprising acts of:

permitting the user to share the at least one visual representation, including any associated digital media content with another user;

transmitting the at least one visual representation associated with the digital media content, any state settings, and any remote service settings to another streamlined device user.

22. The method according to claim **1**, further comprising an act of permitting the user to update date information associated with the digital media content.

23. The method according to claim **22**, further comprising an acts of:

generating an offset for the updated date information associated with the digital media content; and

applying the offset to similar digital media content.

24. The method according to claim **1**, wherein the act of displaying the user interface includes:

providing a plurality of views of the plurality of visual representations of computer content; and

associating the plurality of visual representations of computer content with at least one of the plurality of views, and wherein the each of the plurality of visual representations is responsive to focus and execution, wherein execution includes selection of the visual representation.

25. The method according to claim **1**,

wherein rotating the display component about the longitudinal axis up to approximately 180 degrees from the closed mode and configures the computing device into a laptop mode with one of the plurality of views as a default display; and

wherein rotating the display component about the longitudinal axis configures the computing device into the another display mode with another one of the plurality of views as the default display, and includes rotating the display component beyond approximately 180 degrees from the closed mode to configure the computing device into an easel mode with another one of the plurality of views as the default display.

26. A non-transitory computer-readable medium having computer-readable instructions stored thereon that as a result of being executed by a computer, instruct the computer to perform the method for accessing and managing digital media libraries on a streamlined computing device with a plurality of selectable I/O profiles, wherein the method comprises:

displaying a graphical user interface on the computing device, wherein the graphical user interface comprises at least a plurality of views of digital media content;

providing for transition between the plurality of views in response to selection of an I/O profile, wherein providing for the transition between the plurality of views in response to selection of the I/O profile includes:

permitting the user to rotate a display component of the computing device about a longitudinal axis running along an interface between the display component and a base of the streamlined computing device;

wherein rotating the display component about the longitudinal axis from a closed mode to a first physical orientation configures the computing device into a laptop mode having a first physical configuration of the display component and the base with one of the plurality of views as a default display; and

wherein rotating the display component about the longitudinal axis from the closed mode to a second physical orientation configures the computing device into another display mode having a second physical configuration of the display component and the base with another one of the plurality of views as the default display;

providing for transition between the plurality of views in response to activation of a view selector component configured to permit a user to select one of the plurality of views;

associating at least one of a plurality of visual representations with digital media content;

executing the association with the at least one of the plurality of visual representations with digital media content in response to selection;

transitioning a display on the computing device to a view of the digital media content in response to the act of executing the association; and

providing for display of user digital media content and referenced digital media content in the view of the digital media content.

27. A system for accessing and managing digital media libraries with a plurality of selectable I/O profiles, the system comprising:

a display component configured to display a graphical user interface on a computing device, wherein the graphical user interface comprises at least a plurality of views of digital media content, wherein the plurality of views include at least one of a plurality of visual representations;

an execution component configured to transition the graphical user interface between the plurality of views in response to selection of an I/O profile, wherein selecting the I/O profile includes:

responding to user rotation of a display component of the computing device about a longitudinal axis running along an interface between the display component and a base of the streamlined computing device;

responding to rotation of the display component about the longitudinal from a closed mode to a first physical orientation configures the computing device into a laptop mode having a first physical configuration of the display component and the base with one of the plurality of views as a default display; and

responding to rotation of the display component about the longitudinal axis from the closed mode to a second physical orientation configures the computing device into another display mode having a second physical configuration of the display component and the base with another one of the plurality of views as the default display;

a view selector component configured to transition between the plurality of views in response to activation;

a storage component configured to store an association between at least one of a plurality of visual representations and digital media content;

wherein the execution component is further configured to execute the association with the at least one of the plurality of visual representations with digital media content in response to selection and transition the display to a view of the digital media content in response to the act of executing the association; and

wherein the display component is configured to display user digital media content and referenced digital media content in the view of the digital media content.

* * * * *

UNITED STATES PATENT AND TRADEMARK OFFICE

CERTIFICATE OF CORRECTION

PATENT NO. : 8,612,888 B2
APPLICATION NO. : 12/611282
DATED : December 17, 2013
INVENTOR(S) : Pennington et al.

It is certified that error appears in the above-identified patent and that said Letters Patent is hereby corrected as shown below:

On the Title Page:

The first or sole Notice should read --

Subject to any disclaimer, the term of this patent is extended or adjusted under 35 U.S.C. 154(b) by 1022 days.

Signed and Sealed this
Fourth Day of August, 2015

Michelle K. Lee

Michelle K. Lee
Director of the United States Patent and Trademark Office

CERTIFICATE OF SERVICE

The undersigned hereby certifies that on May 8, 2023, a copy of the foregoing document was served on the counsel listed below in the manner indicated:

BY EMAIL

Jack B. Blumenfeld
Jeremy A. Tigan
MORRIS, NICHOLS,
ARSHT & TUNNELL LLP
1201 North Market Street
P.O. Box 1347
Wilmington, DE 19899
(302) 658-9200
jblumenfeld@morrisnichols.com
jtigan@morrisnichols.com

Eugene Y. Mar
Erik C. Olson
Thomas J. Pardini
Raven Quesenberry
FARELLA, BRAUN & MARTEL LLP
235 Montgomery Street, 17th floor
San Francisco, CA 94104
(415) 954-4400
emar@fbm.com
eolson@fbm.com
tpardini@fbm.com
rquesenberry@fbm.com

Attorneys for Defendants Dell Technologies and Dell Inc.

/s/Adam W. Poff

Adam W. Poff (No. 3990)
Robert M. Vrana (No. 5666)
Alexis N. Stombaugh (No. 6702)
YOUNG CONAWAY
STARGATT & TAYLOR, LLP
Rodney Square
1000 North King Street
Wilmington, DE 19801
(302) 571-6600
apoff@ycst.com
rvrana@ycst.com
astombaugh@ycst.com

Counsel for LiTL LLC