Maintenance and Service Guide

HP Pavilion dv1600 Entertainment Notebook PC

Document Part Number: 408524-002

June 2006

This guide is a troubleshooting reference used for maintaining and servicing the computer. It provides comprehensive information on identifying computer features, components, and spare parts; troubleshooting computer problems; and performing computer disassembly procedures.

EX-1023
Microsoft Inc. v. LiTL LLC

Downloaded from www.Manualslib.com manuals search engine

© Copyright 2006 Hewlett-Packard Development Company, L.P.

Microsoft and Windows are U.S. registered trademarks of Microsoft Corporation. Intel, Celeron, and Core are trademarks or registered trademarks of Intel Corporation or its subsidiaries in the United States and other countries. Bluetooth is a trademark owned by its proprietor and used by Hewlett-Packard Company under license. SD Logo is a trademark of its proprietor.

The information contained herein is subject to change without notice. The only warranties for HP products and services are set forth in the express warranty statements accompanying such products and services. Nothing herein should be construed as constituting an additional warranty. HP shall not be liable for technical or editorial errors or omissions contained herein.

Maintenance and Service Guide
HP Pavilion dv1600 Entertainment Notebook PC
Second Edition: June 2006
First Edition: March 2006
Document Part Number: 408524-002

Downloaded from www.Manualslib.com manuals search engine

Contents

1 Product Description

1.1 Features 1–2
1.2 Resetting the Computer. 1–4
1.3 Power Management. 1–5
1.4 External Components 1–6
1.5 Design Overview. 1–22

2 Troubleshooting

2.1 Computer Setup. 2–1
Using Computer Setup 2–1
Selecting from the File Menu 2–2
Selecting from the Security Menu 2–3
Selecting from the Diagnostics Menu. 2–4
Selecting from the System Configuration Menu. . . . 2–5
2.2 Troubleshooting Flowcharts 2–6

Downloaded from www.Manualslib.com manuals search engine

3 Illustrated Parts Catalog

3.1 Serial Number Location 3–1
3.2 Computer Major Components. 3–2
3.3 Display Assembly Components 3–16
3.4 Mass Storage Devices 3–18
3.5 Plastics Kit 3–20
3.6 Miscellaneous 3–21
3.7 Sequential Part Number Listing 3–23

4 Removal and Replacement Preliminaries

4.1 Tools Required 4–1
4.2 Service Considerations 4–2
Plastic Parts 4–2
Cables and Connectors 4–2
4.3 Preventing Damage to Removable Drives 4–3
4.4 Preventing Electrostatic Damage 4–4
4.5 Packaging and Transporting Precautions 4–5
4.6 Workstation Precautions 4–6
4.7 Grounding Equipment and Methods 4–7

Downloaded from www.Manualslib.com manuals search engine

5 Removal and Replacement Procedures

5.1 Serial Number 5–2
5.2 Disassembly Sequence Chart 5–3
5.3 Preparing the Computer for Disassembly 5–4
5.4 Hard Drive. 5–6
5.5 Computer Feet. 5–10
5.6 Memory Module 5–11
5.7 Mini Card Module. 5–14
5.8 Optical Drive. 5–18
5.9 Switch Cover. 5–21
5.10 Keyboard. 5–24
5.11 Display Assembly 5–28
5.12 Base Enclosure 5–41
5.13 USB/S-Video Board 5–46
5.14 Bluetooth Module 5–48
5.15 Speaker Assembly. 5–50
5.16 RTC Battery 5–52
5.17 Menu Control Button Board 5–54
5.18 Fan/Heat Sink Assembly. 5–57
5.19 Processor 5–59
5.20 System Board 5–61
5.21 LED Board 5–68
5.22 ExpressCard Assembly 5–70

Downloaded from www.Manualslib.com manuals search engine

6 Specifications

A Screw Listing

B Software Update and Recovery

C Display Component Recycling

D Connector Pin Assignments

E Power Cord Set Requirements

Index

Downloaded from www.Manualslib.com manuals search engine

1

Product Description

The HP Pavilion dv1600 Entertainment Notebook PC offers advanced modularity, Intel® Core™ Duo, Core Solo, and Celeron® M processors, and extensive multimedia support.

HP Pavilion dv1600 Entertainment Notebook PC

Downloaded from www.Manualslib.com manuals search engine

1.1 Features

- The following processors are available, varying by computer model:
  - ❏ Intel Core Duo T2500 (2.00-GHz)
  - ❏ Intel Core Duo T2400 (1.83-GHz
  - ❏ Intel Core Duo T2300E (1.66-GHz)
  - ❏ Intel Core Duo T2250 (1.73-GHz)
  - ❏ Intel Core Duo T2300 (1.66-GHz)
  - ❏ Intel Core Duo T2050 (1.60-GHz)
  - ❏ Intel Core Solo T1350 (1.86-GHz)
  - ❏ Intel Core Solo T1300 (1.66-GHz)
  - ❏ Intel Celeron M 410 (1.46-GHz)
- 14.0-inch WXGA (1280 × 768) TFT display with over 16.7 million colors, varying by computer model
- 100-, 80-, 60-, or 40-GB high-capacity hard drive, varying by computer model
- 256-MB DDR synchronous DRAM (SDRAM) at 667 MHz and 533 MHz, expandable to 2.0 GB on computer models with Intel Core Duo processors and 1.0 GB on computer models with Intel Celeron M and Intel Core Solo processors
- Microsoft® Windows® XP Home Edition or Windows XP Professional, or Free DOS, varying by computer model
- Full-size Windows keyboard with embedded numeric keypad
- TouchPad pointing device with on/off button and dedicated two-way scroll region
- Integrated 10/100 BASE-T Ethernet local area network (LAN) network interface card (NIC) with RJ-45 jack
- Integrated high-speed 56K modem with RJ-11 jack
- Integrated wireless support for Mini Card IEEE 802.11b and 802.11b/g WLAN device

Downloaded from www.Manualslib.com manuals search engine

- Support for one ExpressCard
- External 65-watt AC adapter with 3-wire power cord
- 6-cell or 12-cell Li-Ion battery
- Stereo speakers with volume up and down buttons
- Integrated Web camera
- Integrated microphone
- Support for the following optical drives:
  - 8X Max DVD+RW/R and CD-RW Combo Drive
  - 4X Max DVD+RW/R and CD-RW Combo Drive
  - 8X Max DVD-ROM Drive
  - 24X Max DVD/CD-RW Combo Drive
- Connectors:
  - Audio-in (microphone)
  - Audio-out (headphone)
  - Digital Media Slot (select computer models only)
  - Docking (select computer models only)
  - ExpressCard
  - External monitor
  - IEEE 1394 digital (select computer models only)
  - Infrared
  - Power
  - RJ-11 (modem)
  - RJ-45 (network)
  - S-Video-out (select computer models only)
  - Universal Serial Bus (USB) v. 2.0

Downloaded from www.Manualslib.com manuals search engine

1.2 Resetting the Computer

If the computer you are servicing has an unknown password, follow these steps to clear the password. These steps also clear CMOS:

1. Prepare the computer for disassembly (refer to Section 5.3, "Preparing the Computer for Disassembly," for more information).
2. Remove the real-time clock (RTC) battery (refer to Section 5.16, "RTC Battery," for more information).
3. Wait approximately 5 minutes.
4. Replace the RTC battery and reassemble the computer.
5. Connect AC power to the computer. Do not reinsert any batteries at this time.
6. Turn on the computer.

All passwords and all CMOS settings have been cleared.

Downloaded from www.Manualslib.com manuals search engine

1.3 Power Management

The computer comes with power management features that extend battery operating time and conserve power. The computer supports the following power management features:

- Standby
- Hibernation
- Setting customization by the user
- Hotkeys for setting the level of performance
- Battery calibration
- Lid switch standby/resume
- Power/standby button
- Advanced Configuration and Power Management (ACPM) compliance

Downloaded from www.Manualslib.com manuals search engine

1.4 External Components

The external components on the front of the computer are shown below and described in Table 1-1.

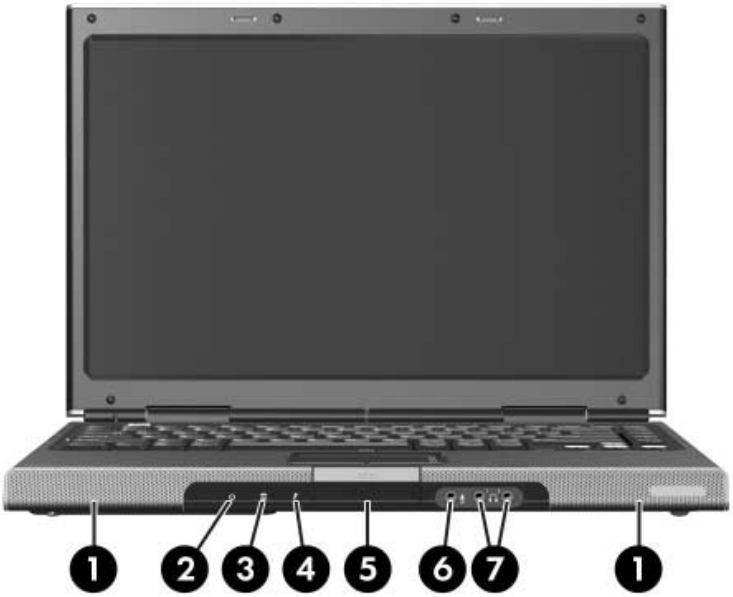

Front Components

Downloaded from www.Manualslib.com manuals search engine

Table 1-1

Front Components

Item	Component	Function
1	Speakers (2)	Produce stereo sound.
2	Power light	■ On: Computer is turned on. ■ Blinking: Computer is in standby. ■ Off: Computer is off.
3	Drive light	On or blinking: The internal hard drive or an optical drive is being accessed.
4	Battery light	■ Amber: The battery is charging. ■ Green: The battery is fully charged. ■ Off: The battery is discharging or not inserted.
5	Display release latch	Opens the computer.
6	Audio-in (microphone) jack	Connects an optional monaural (single sound channel) microphone.
7	Audio-out (headphone) jack (2)	Connect optional headphones or powered stereo speakers. Also connect the audio function of an audio/video device such as a television or VCR.

Downloaded from www.Manualslib.com manuals search engine

The external components on the right side of the computer are shown below and described in Table 1-2.

Right-Side Components

Downloaded from www.Manualslib.com manuals search engine

Table 1-2

Right-Side Components

Item	Component	Function
1	USB connectors (2)	Connect an optional USB device.
2	Digital Media Slot (select computer models only)	In Windows, supports digital cards.
3	1394 port (select computer models only)	Connects an optional 1394a device such as a scanner, digital camera, or digital camcorder.
4	Digital Media Slot light (select computer models only)	On: A digital card is being accessed.
5	Optical drive	Supports an optical disc.
6	S-Video-out jack (select computer models only)	Connects an optional S-Video device, such as a television, VCR, camcorder, projector, or video capture card.

Downloaded from www.Manualslib.com manuals search engine

The external components on the rear and left side of the computer are shown below and described in Table 1-3.

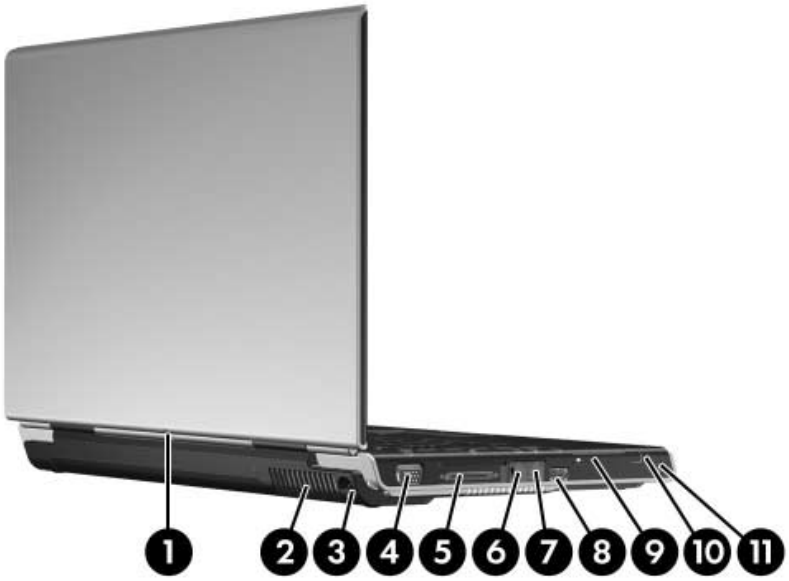

Rear and Left-Side Components

Downloaded from www.Manualslib.com manuals search engine

Table 1-3

Rear and Left-Side Components

Item	Component	Function
1	Wireless light (select computer models only)	On: An internal wireless device, such as a wireless LAN device and/or a Bluetooth device, is turned on. ✎ To establish a wireless connection, a wireless network must already be set up.
2	Exhaust vent	Provides airflow to cool internal components. △ To prevent overheating, do not obstruct vents. Do not allow a hard surface, such as a printer, or a soft surface, such as pillows, thick rugs or clothing, to block airflow.
3	Power connector	Connects an AC adapter cable.
4	External monitor port	Connects an optional VGA external monitor or projector.
5	Expansion port 2	Connects the computer to an optional expansion product or docking device.
6	RJ-45 (network) jack	Connects an optional network cable.
7	RJ-11 (modem) jack	Connects the modem cable.
8	USB connector	Connects an optional USB device.
9	ExpressCard slot	Supports an optional ExpressCard.
10	Security cable slot	Attaches an optional security cable to the computer.

Downloaded from www.Manualslib.com manuals search engine

The keyboard components on the computer are shown below and described in Table 1-4.

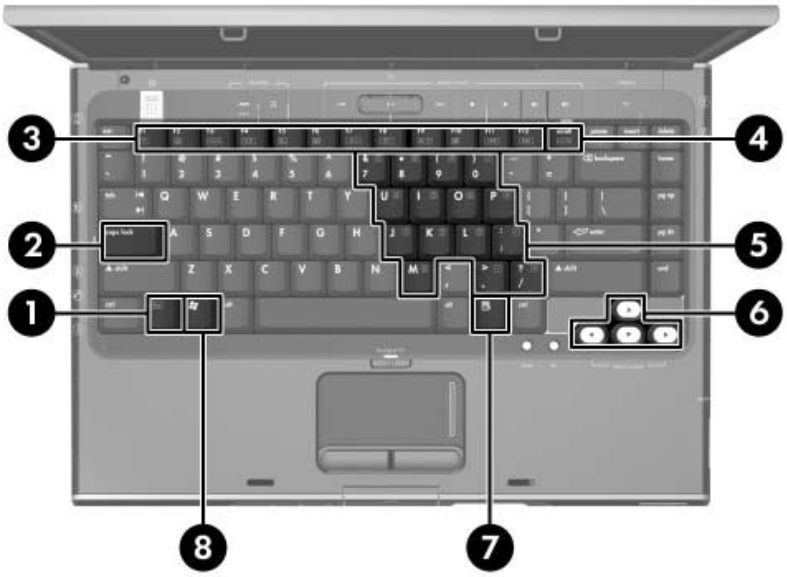

Keyboard Components

Downloaded from www.Manualslib.com manuals search engine

Table 1-4

Keyboard Components

Item	Component	Function
1	**fn** key	Combines with other keys to perform system tasks. For example, pressing **fn+f7** decreases screen brightness.
2	**caps lock** key	Enables caps lock and turns on the caps lock light.
3	**f1** to **f12** keys (12)	Perform system and application tasks. When combined with the **fn** key, several keys and buttons perform additional tasks as hotkeys.
4	**num lock** key	Enables numeric lock, turns on the embedded numeric keypad, and turns on the num lock light.
5	Keypad keys (15)	In Windows, can be used like the keys on an external numeric keypad.
6	Arrow keys	Move the cursor around the screen.
7	Windows applications key	In Windows, displays a shortcut menu for items beneath the pointer.
8	Windows logo key	In Windows, displays the Windows Start menu.

Downloaded from www.Manualslib.com manuals search engine

The top components on the computer are shown below and described in Table 1-5.

Top Components, Part 1

Table 1-5

Top Components, Part 1

Item	Component	Function
1	Display switch	If the computer is closed while on, turns off the display.
2	Power button	When the computer is ■ Off, press to turn on the computer. ■ On, briefly press to initiate Hibernation. ■ In Standby, briefly press to resume from Standby. ■ In Hibernation, briefly press to restore from Hibernation.

Downloaded from www.Manualslib.com manuals search engine

Table 1-5

Top Components, Part 1 *(Continued)*

Item	Component	Function
3	DVD button	When the computer is ■ Off, opens QuickPlay DVD mode. ■ On in Windows, opens the default Windows DVD application. ■ On in QuickPlay music mode, opens QuickPlay DVD mode. ■ On in QuickPlay DVD mode, displays the DVD setup menu. ■ In Standby, resumes from Standby into Windows. ■ In Hibernation, opens QuickPlay DVD mode.
4	Media button	When the computer is ■ Off, opens QuickPlay music mode. ■ On in Windows, opens the default Windows music application. ■ On in QuickPlay DVD mode, opens QuickPlay music mode. ■ In Standby, resumes from Standby into Windows. ■ In Hibernation, opens QuickPlay music mode.
5	Previous/Rewind Button	When a disc is in the optical drive: ■ Press to play the previous track or chapter. ■ Press **fn+**this button to rewind.
6	Play/Pause button	When a disc is in the optical drive and is: ■ Not playing, press to play the disc. ■ Playing, press to pause the disc.

Downloaded from www.Manualslib.com manuals search engine

The top components on the computer are shown below and described in Table 1-6.

Top Components, Part 2

Downloaded from www.Manualslib.com manuals search engine

Table 1-6

Top Components, Part 2

Item	Component	Function
1	Next/Fast Forward button	When a disc is in the optical drive: ■ Press once to play the next track or chapter. ■ Press **fn+**this button to fast forward.
2	Stop button	When a disc is in the optical drive, press to stop the current disc activity.
3	Volume down button	Decreases system volume.
4	Volume mute button Mute light	Mutes or restores volume. On: Volume is muted.
5	Volume up button	Increases system volume.
6	Wireless button	Enables/disables an internal wireless device.

Downloaded from www.Manualslib.com manuals search engine

The top components on the computer are shown below and described in Table 1-7.

Top Components, Part 3

Downloaded from www.Manualslib.com manuals search engine

Table 1-7

Top Components, Part 3

Item	Component	Function
1	TouchPad	Moves the pointer.
2	TouchPad light	On: TouchPad is enabled.
3	Caps lock light	On: Caps lock is on.
4	Power/ button light	■ On: Computer is turned on. ■ Blinking: Computer is in standby. ■ Off: Computer is off.
5	Wireless light	On: An internal wireless device, such as a wireless LAN device and/or a Bluetooth device, is turned on. ✎ To establish a wireless connection, a wireless network must already be set up.
6	Num lock light	On: Num lock or the internal keypad is on.
7	Back button	■ In Windows, emulates the “back” function of the **alt+**left arrow command in the active application. ■ In QuickPlay, moves up one directory level in an on-screen menu.
8	OK button	Selects an item you have chosen on the screen.
9	TouchPad on/off button	Enables/disables the TouchPad.
10	TouchPad vertical scroll region	Scrolls upward or downward.
11	Left and right TouchPad buttons	Function like the left and right buttons on an external mouse.

Downloaded from www.Manualslib.com manuals search engine

The external components on the bottom of the computer are shown below and described in Table 1-8.

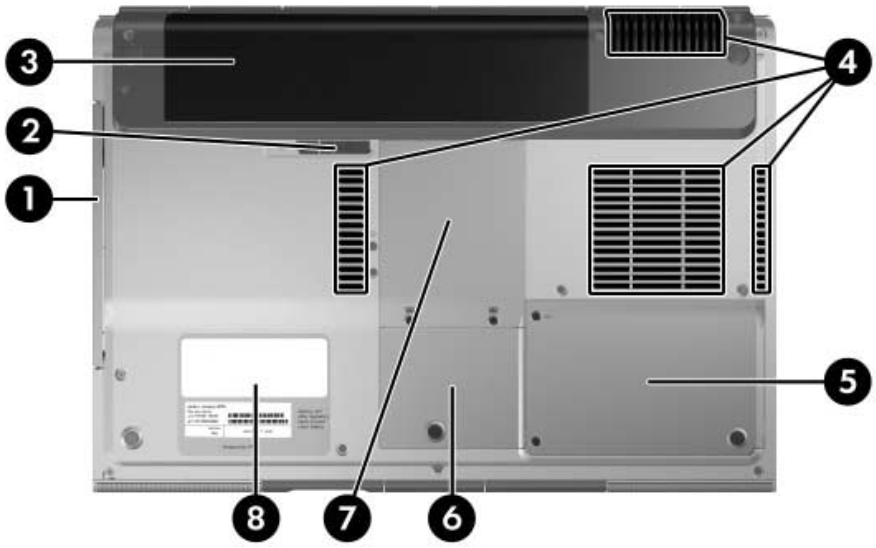

Bottom Components

Table 1-8

Bottom Components

Item	Component	Function
1	Optical drive	Supports an optical disc.
2	Battery release latch	Releases a battery from the battery bay.
3	Battery bay	Holds a battery

Downloaded from www.Manualslib.com manuals search engine

Table 1-8

Bottom Components *(Continued)*

Item	Component	Function
4	Exhaust vents (4)	Provide airflow to cool internal components. △ To prevent overheating, do not obstruct vents. Use the computer only on a flat, hard surface. Do not allow a hard surface, such as a printer, or a soft surface, such as pillows, thick rugs or clothing, to block airflow.
5	Hard drive bay	Holds the internal hard drive.
6	Mini Card compartment	Holds an optional Mini Card device. △ To prevent an unresponsive system and the display of a warning message, install only a Mini Card device authorized for use in your computer by the governmental agency that regulates wireless devices in your country. If you install a device and then receive a warning message, remove the device to restore computer functionality. Then contact Customer Care.
7	Memory module compartment	Contains 2 memory slots that support replaceable memory modules. The number of preinstalled memory modules varies by computer model.
8	Label areas (2)	Contain the computer serial number and other applicable regulatory labels.

Downloaded from www.Manualslib.com manuals search engine

1.5 Design Overview

This section presents a design overview of key parts and features of the computer. Refer to Chapter 3, "Illustrated Parts Catalog," to identify replacement parts, and Chapter 5, "Removal and Replacement Procedures," for disassembly steps.

The system board provides the following device connections:

- Audio
- Display
- Fan
- Hard drive
- Intel Celeron M and Intel Core Duo and Core Solo processors
- Keyboard and TouchPad
- Memory module
- Mini Card modules
- PC Card

CAUTION: To properly ventilate the computer, allow at least a 7.6-cm (3-inch) clearance on the left and right sides of the computer.

The computer uses an electric fan for ventilation. The fan is controlled by a temperature sensor and is designed to turn on automatically when high temperature conditions exist. These conditions are affected by high external temperatures, system power consumption, power management/battery conservation configurations, battery fast charging, and software. Exhaust air is displaced through the ventilation grill located on the left side of the computer.

Downloaded from www.Manualslib.com manuals search engine

2

Troubleshooting

WARNING: Only authorized technicians trained by HP should repair this equipment. All troubleshooting and repair procedures are detailed to allow only subassembly-/module-level repair. Because of the complexity of the individual boards and subassemblies, do not attempt to make repairs at the component level or modifications to any printed wiring board. Improper repairs can create a safety hazard. Any indication of component replacement or printed wiring board modification may void any warranty or exchange allowances.

2.1 Computer Setup

Computer Setup is a system information and customization utility that can be used even when the operating system is not working or will not load. This utility includes settings that are not available in Windows.

Using Computer Setup

Information and settings in Computer Setup are accessed from the File, Security, Diagnostics, or System Configuration menus:

1. Turn on or restart the computer. Press **f10** while the F10 = ROM-Based Setup message is displayed in the lower-left corner of the screen.
   - ❏ To change the language, use the cursor control keys to navigate to the **System Configuration** menu.
   - ❏ To view navigation information, press **f1**.
   - ❏ To return to the Computer Setup menu, press **esc**.

Downloaded from www.Manualslib.com manuals search engine

2. Select the **File**, **Security**, **Diagnostics**, or **System Configuration** menu.
3. To close Computer Setup and restart the computer:
   - ❏ Select **File** > **Save changes and exit**, and then press **enter**.

   – or –

   - ❏ Select **File** > **Ignore changes and exit**, and then press **enter**.

   – or –

   - ❏ Select **File** > **Restore defaults**, and then press **enter**.
4. When you are prompted to confirm your action, press **f10**.

Selecting from the File Menu

Table 2-1

File Menu

Select	To Do This
System Information	■ View identification information about the computer, processor, memory and cache size, and system ROM. ■ View BIOS revision, keyboard controller version, and battery serial number information.

Downloaded from www.Manualslib.com manuals search engine

Selecting from the Security Menu

Table 2-2

Security Menu

Select	To Do This
Setup Password	Enter, change, or delete an Setup password.
Power-On Password	Enter, change, or delete a power-on password.
Password Options (Password options can be selected only when a power-on password has been set.)	Enable/disable ■ Stringent security. ■ Requirement of password on restart.
DriveLock Passwords	Enable/disable DriveLock; change a DriveLock user or master password. ✎ DriveLock Settings are accessible only when you enter Computer Setup by turning on (not restarting) the computer.
Smart Card Security	Enable/disable smart card power-on support. ✎ A setup password must be established to use this feature.
TPM Embedded Security	Enable/disable ■ Embedded security device state. ■ Power-on authentication support. ■ Automatic DriveLock support.
System IDs	Establish ■ Notebook asset tracking number. ■ Notebook ownership tags.
Disk Sanitizer	Establish fast, optimum, or custom settings for disk sanitizing.

*Not applicable to SuperDisk LS-120 drives.

Downloaded from www.Manualslib.com manuals search engine

Selecting from the Diagnostics Menu

Table 2-3

Diagnostics Menu

Select	To Do This
HDD Self-Test Options	Run a quick comprehensive self test on hard drives in the system that support the test features.
Memory Check	Run a quick comprehensive test on system memory on the following categories: ■ Walking 0s ■ Walking 1s ■ High Address line testing ■ Alternate Pattern testing

Downloaded from www.Manualslib.com manuals search engine

Selecting from the System Configuration Menu

Table 2-4

System Configuration Menu

Select	To Do This
Language	Change the Computer Setup language.
Boot Options	Enable/disable MultiBoot, which sets a startup sequence that can include most bootable devices and media in the system.
Device Configurations	Enable/disable ■ Swap **Fn**/**Ctrl** keys. ■ USB legacy support. ■ BIOS DMA data transfers. ■ Fan Always on while on AC Power. ■ Data Execution Prevention. ■ LAN Power save.
Built-In Device Options	Enable/disable ■ Embedded WLAN Device Radio. ■ Embedded Bluetooth Device Radio. ■ LAN/WLAN Switching. ■ Wake on LAN from Off.
Port Options	Enable/disable ■ USB Port. ■ 1394 Port. ■ CardBus Slot.

Downloaded from www.Manualslib.com manuals search engine

2.2 Troubleshooting Flowcharts

Table 2-5

Troubleshooting Flowcharts Overview

Flowchart	Description
2.1	“Flowchart 2.1—Initial Troubleshooting”
2.2	“Flowchart 2.2—No Power, Part 1”
2.3	“Flowchart 2.3—No Power, Part 2”
2.4	“Flowchart 2.4—No Power, Part 3”
2.5	“Flowchart 2.5—No Power, Part 4”
2.6	“Flowchart 2.6—No Video, Part 1”
2.7	“Flowchart 2.7—No Video, Part 2”
2.8	“Flowchart 2.8—Nonfunctioning Docking Device (if applicable)”
2.9	“Flowchart 2.9—No Operating System (OS) Loading”
2.10	“Flowchart 2.10—No OS Loading, Hard Drive, Part 1”
2.11	“Flowchart 2.11—No OS Loading, Hard Drive, Part 2”
2.12	“Flowchart 2.12—No OS Loading, Hard Drive, Part 3”
2.13	“Flowchart 2.13—No OS Loading, Diskette Drive”
2.14	“Flowchart 2.14—No OS Loading, Optical Drive”
2.15	“Flowchart 2.15—No Audio, Part 1”
2.16	“Flowchart 2.16—No Audio, Part 2”
2.17	“Flowchart 2.17—Nonfunctioning Device”
2.18	“Flowchart 2.18—Nonfunctioning Keyboard”
2.19	“Flowchart 2.19—Nonfunctioning Pointing Device”
2.20	“Flowchart 2.20—No Network/Modem Connection”

Downloaded from www.Manualslib.com manuals search engine

Flowchart 2.1—Initial Troubleshooting

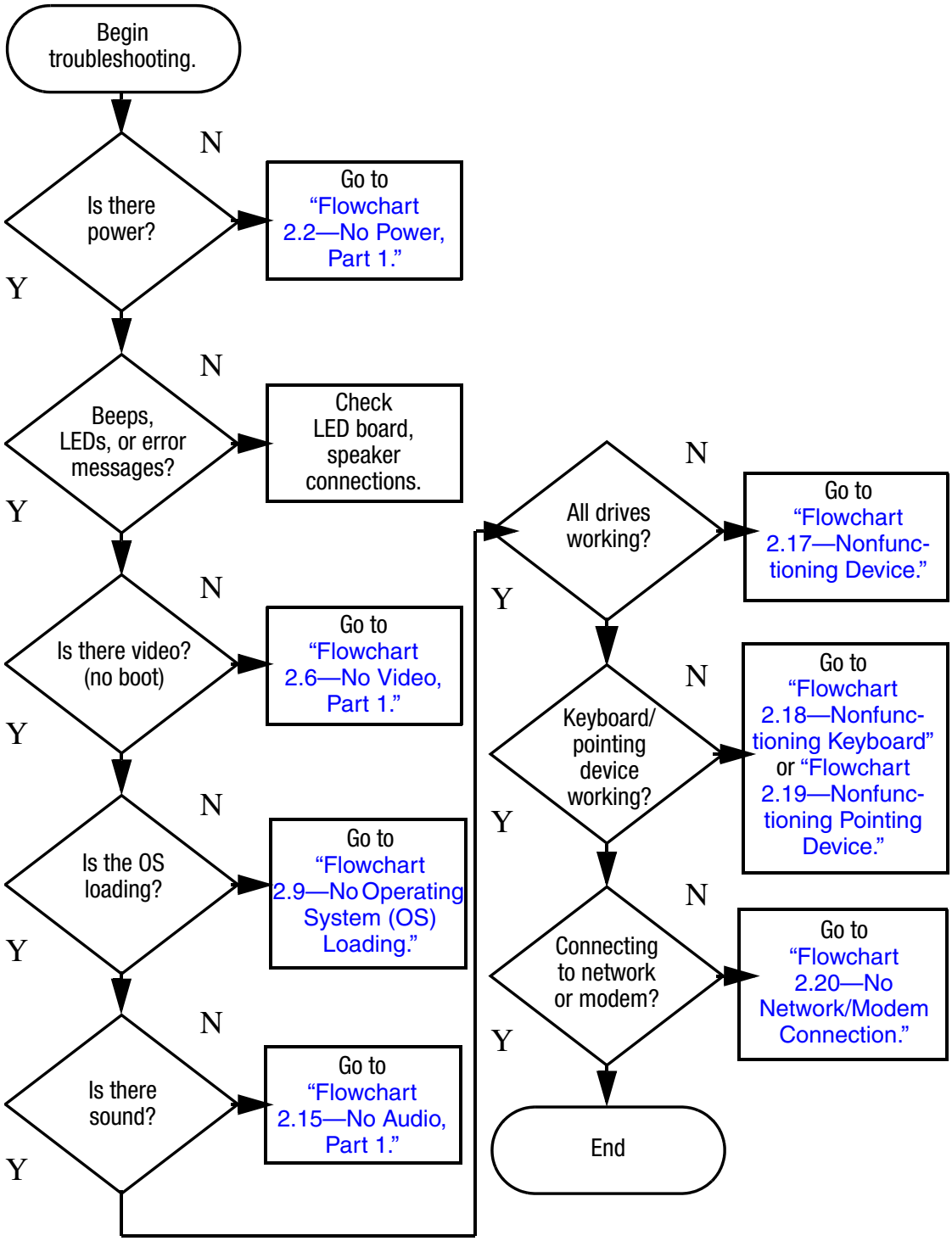

Downloaded from www.Manualslib.com manuals search engine

Flowchart 2.2—No Power, Part 1

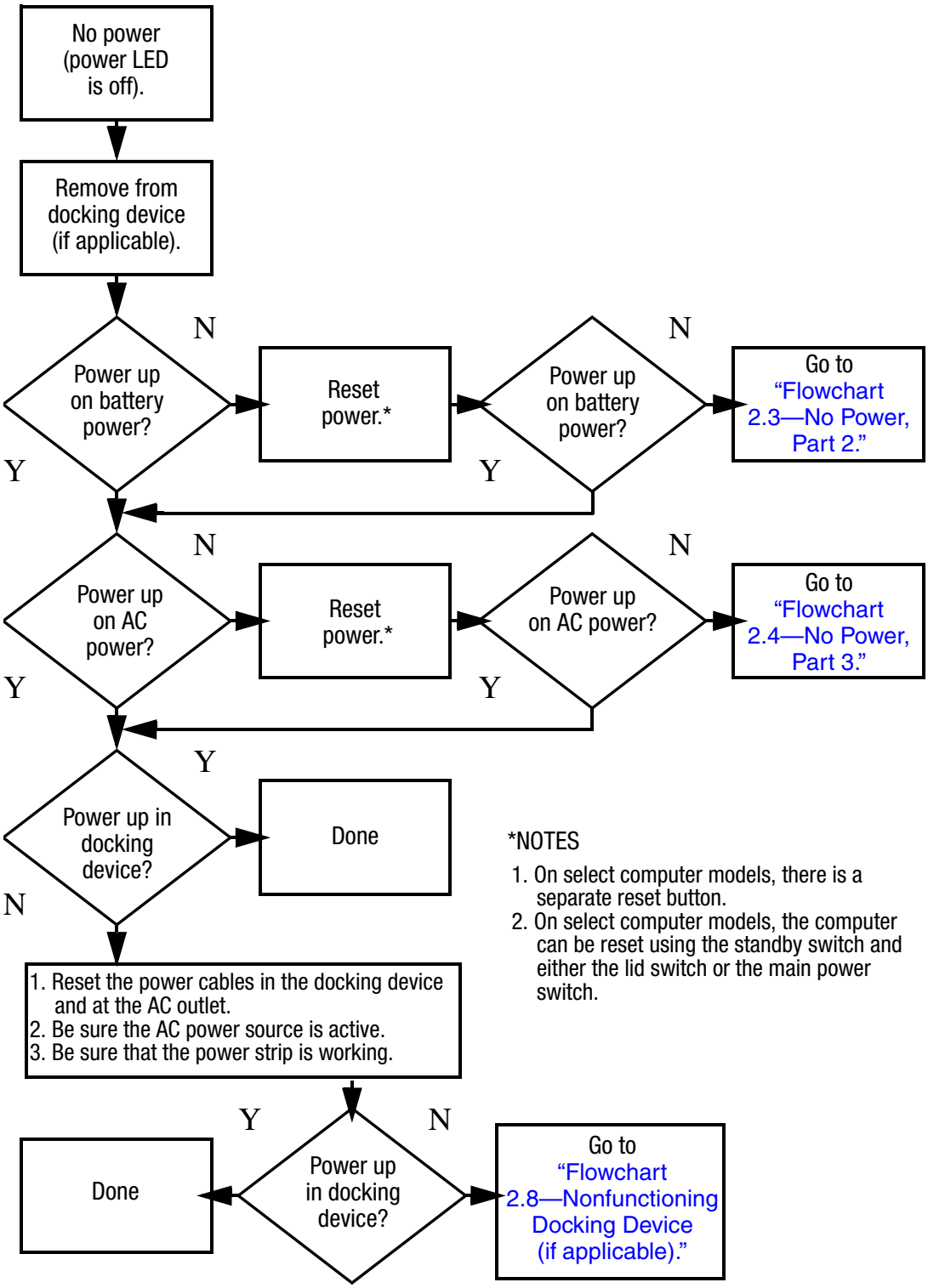

*NOTES

1. On select computer models, there is a separate reset button.
2. On select computer models, the computer can be reset using the standby switch and either the lid switch or the main power switch.

Downloaded from www.Manualslib.com manuals search engine

Flowchart 2.3—No Power, Part 2

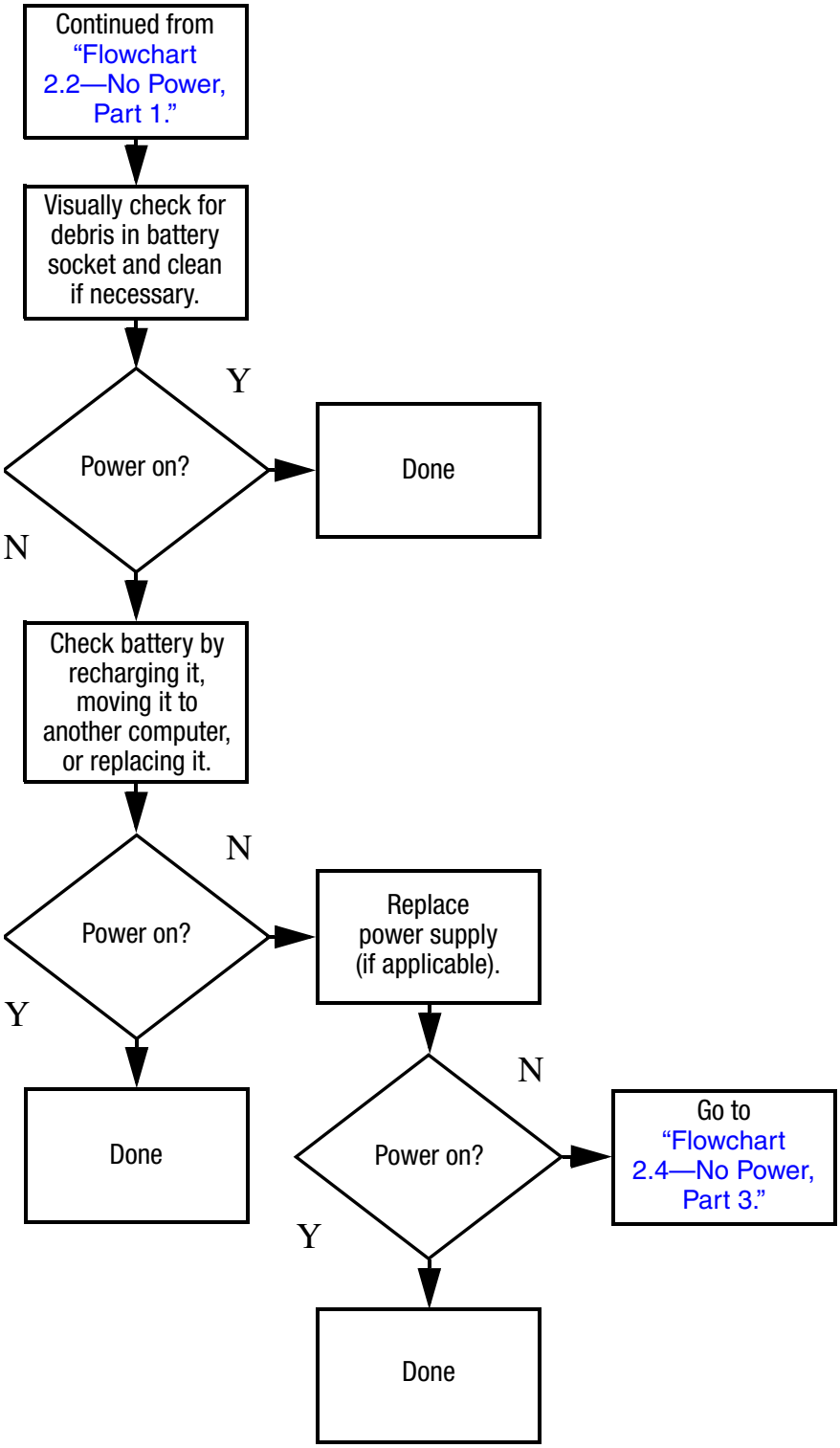

Downloaded from www.Manualslib.com manuals search engine

Flowchart 2.4—No Power, Part 3

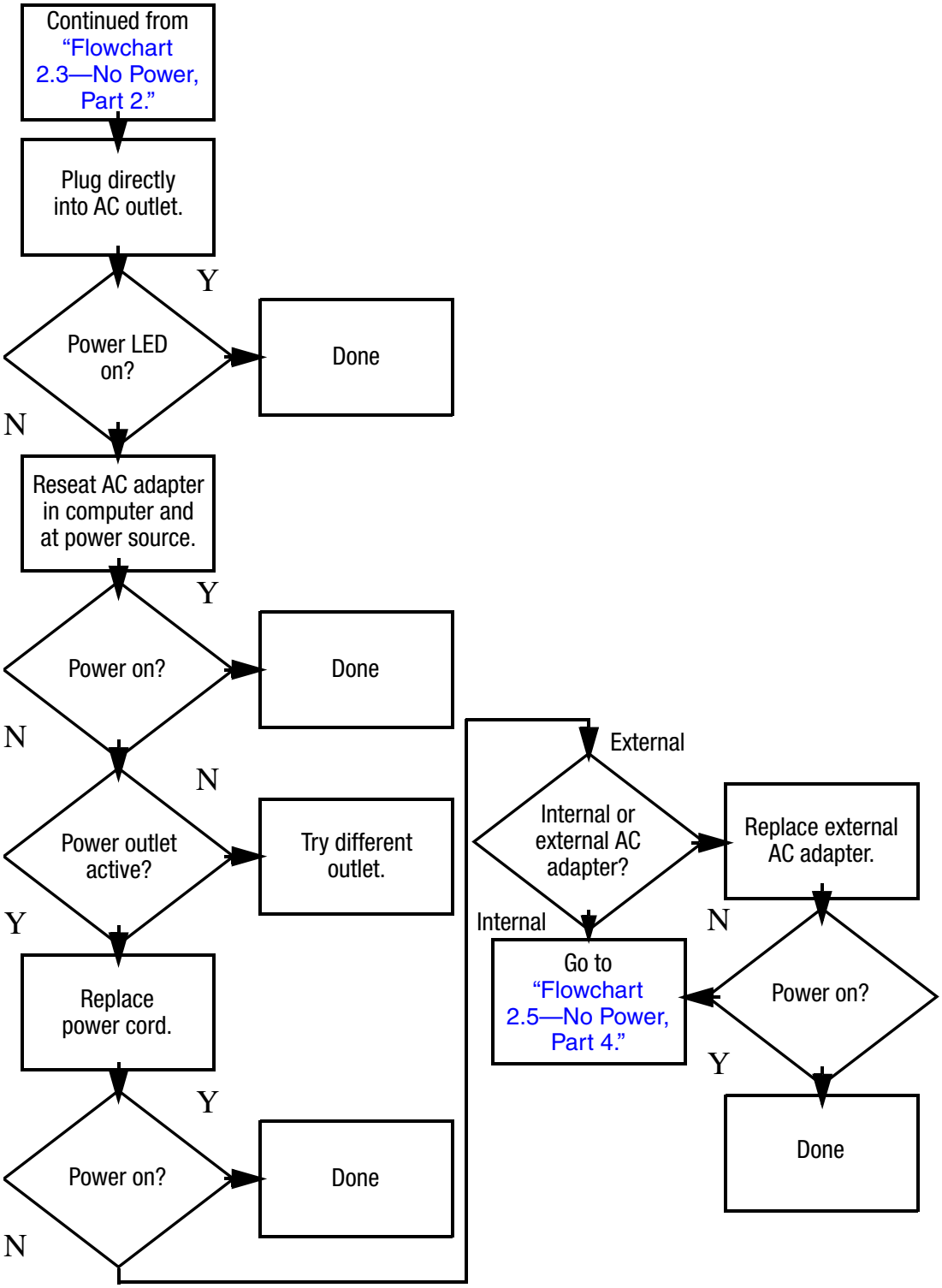

Downloaded from www.Manualslib.com manuals search engine

Flowchart 2.5—No Power, Part 4

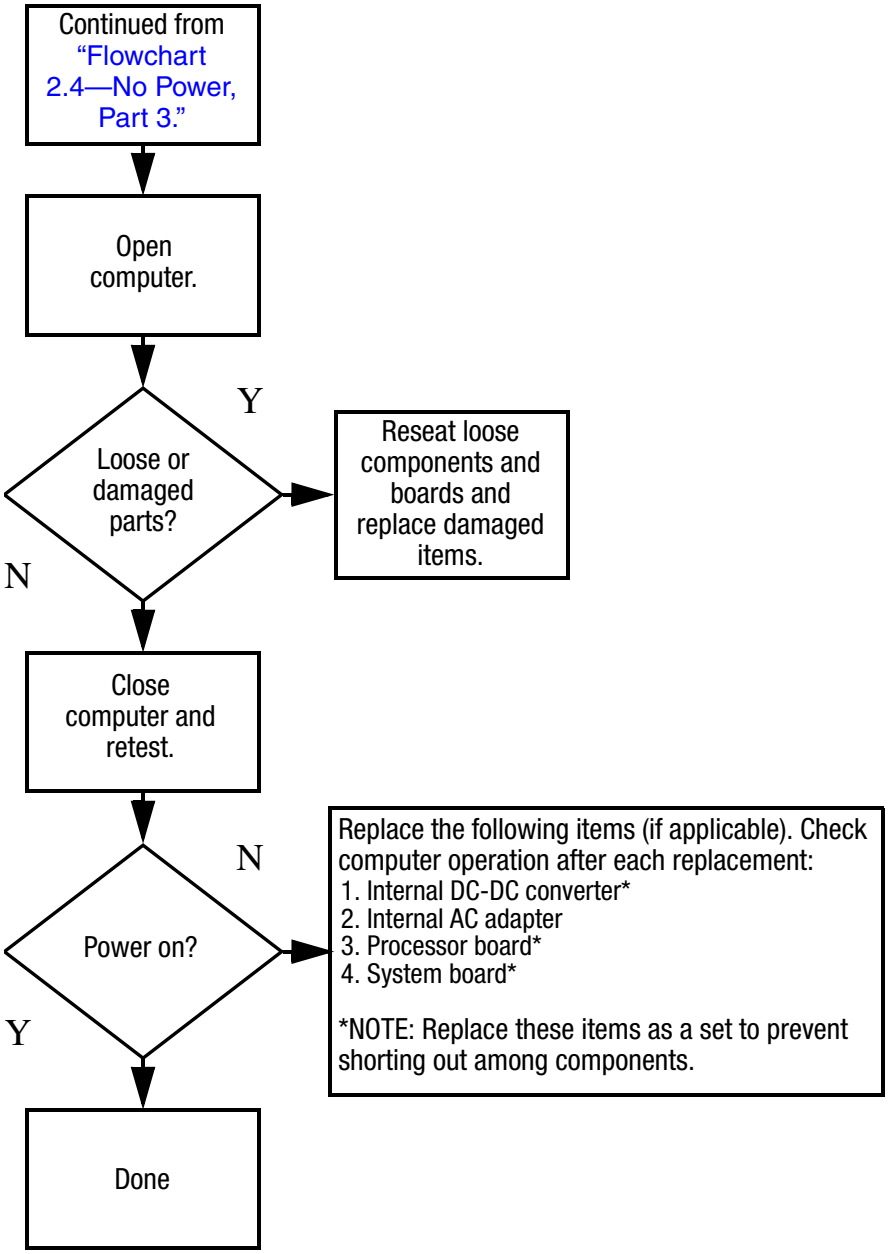

Downloaded from www.Manualslib.com manuals search engine

Flowchart 2.6—No Video, Part 1

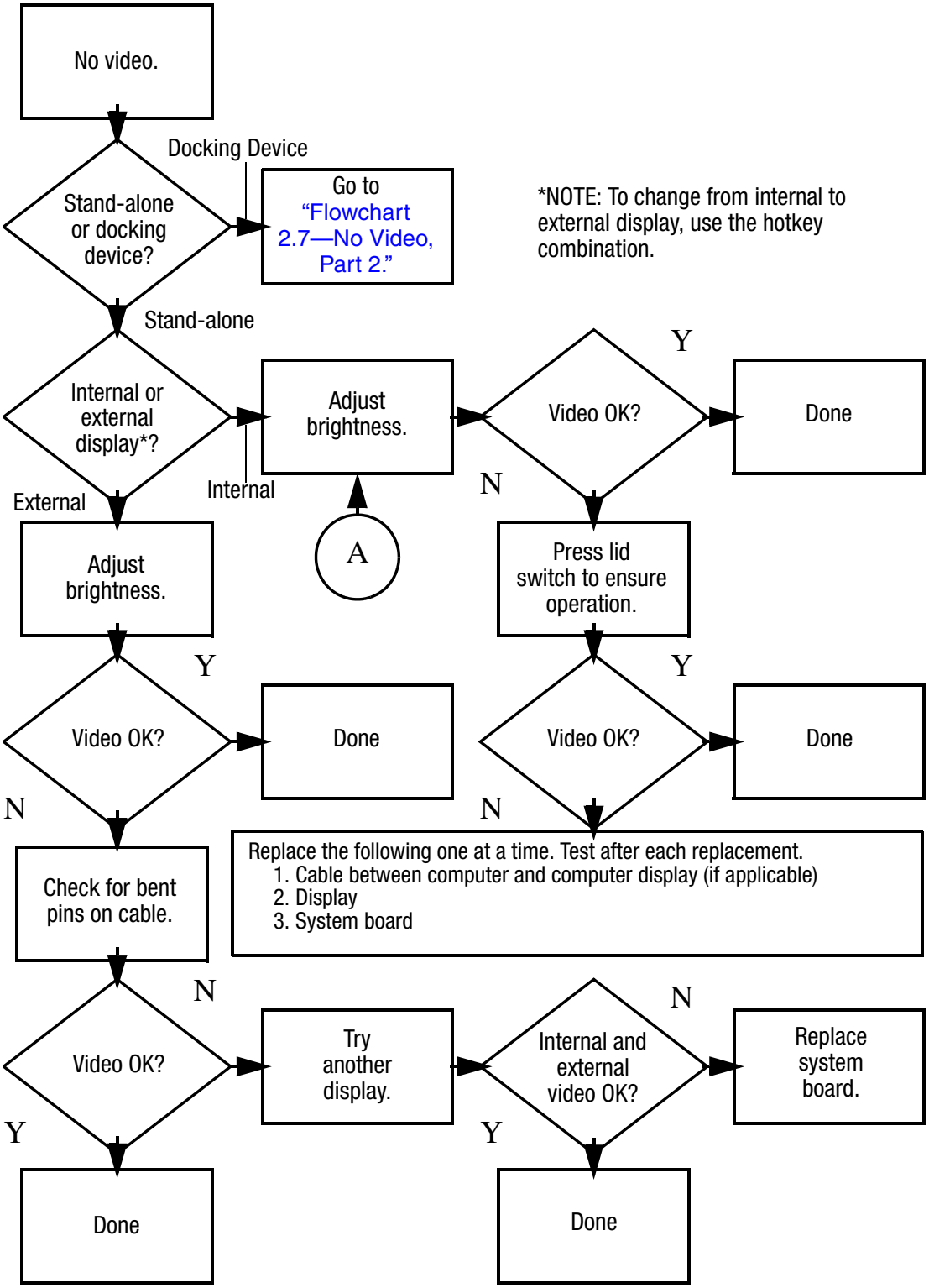

Downloaded from www.Manualslib.com manuals search engine

Flowchart 2.7—No Video, Part 2

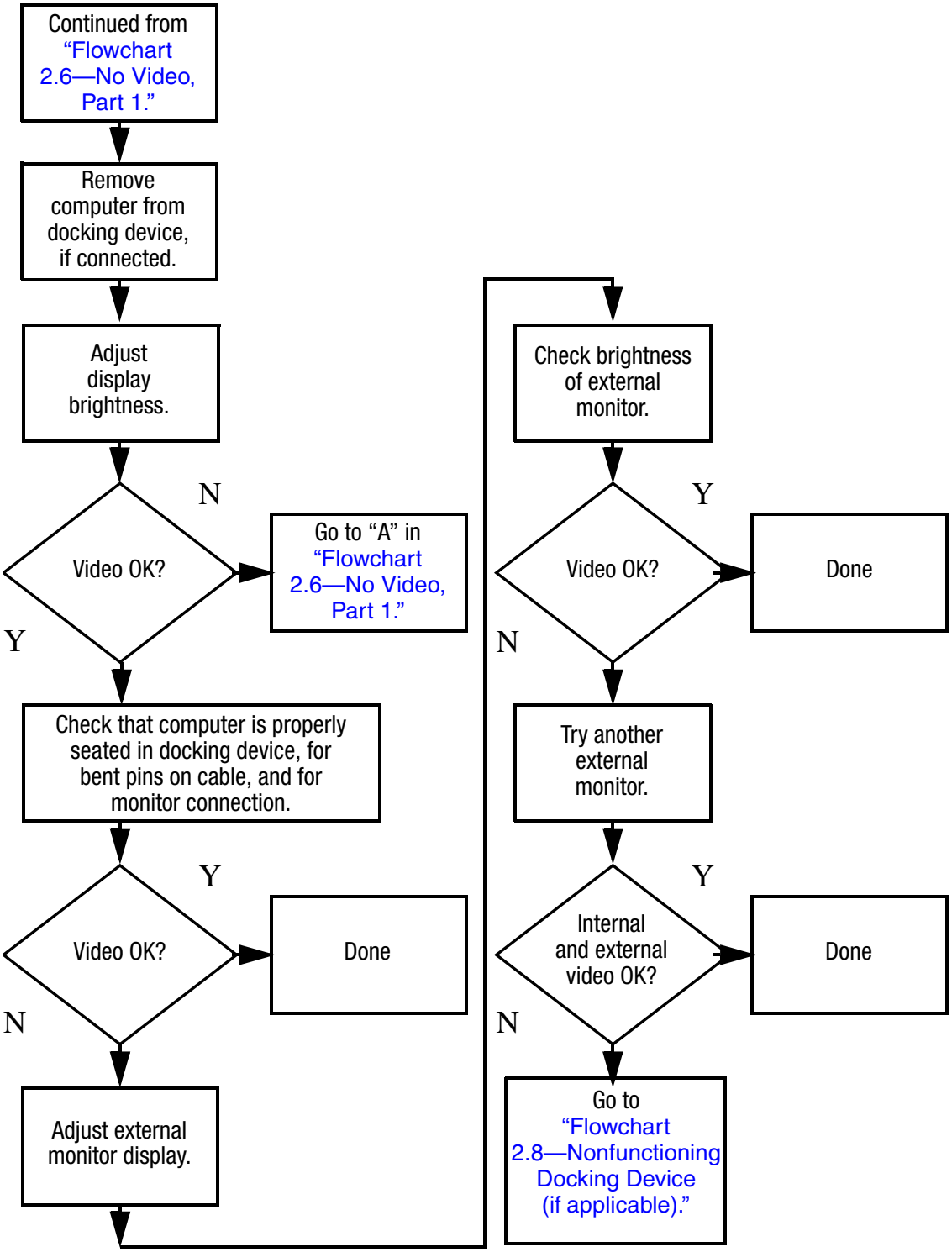

Downloaded from www.Manualslib.com manuals search engine

Flowchart 2.8—Nonfunctioning Docking Device (if applicable)

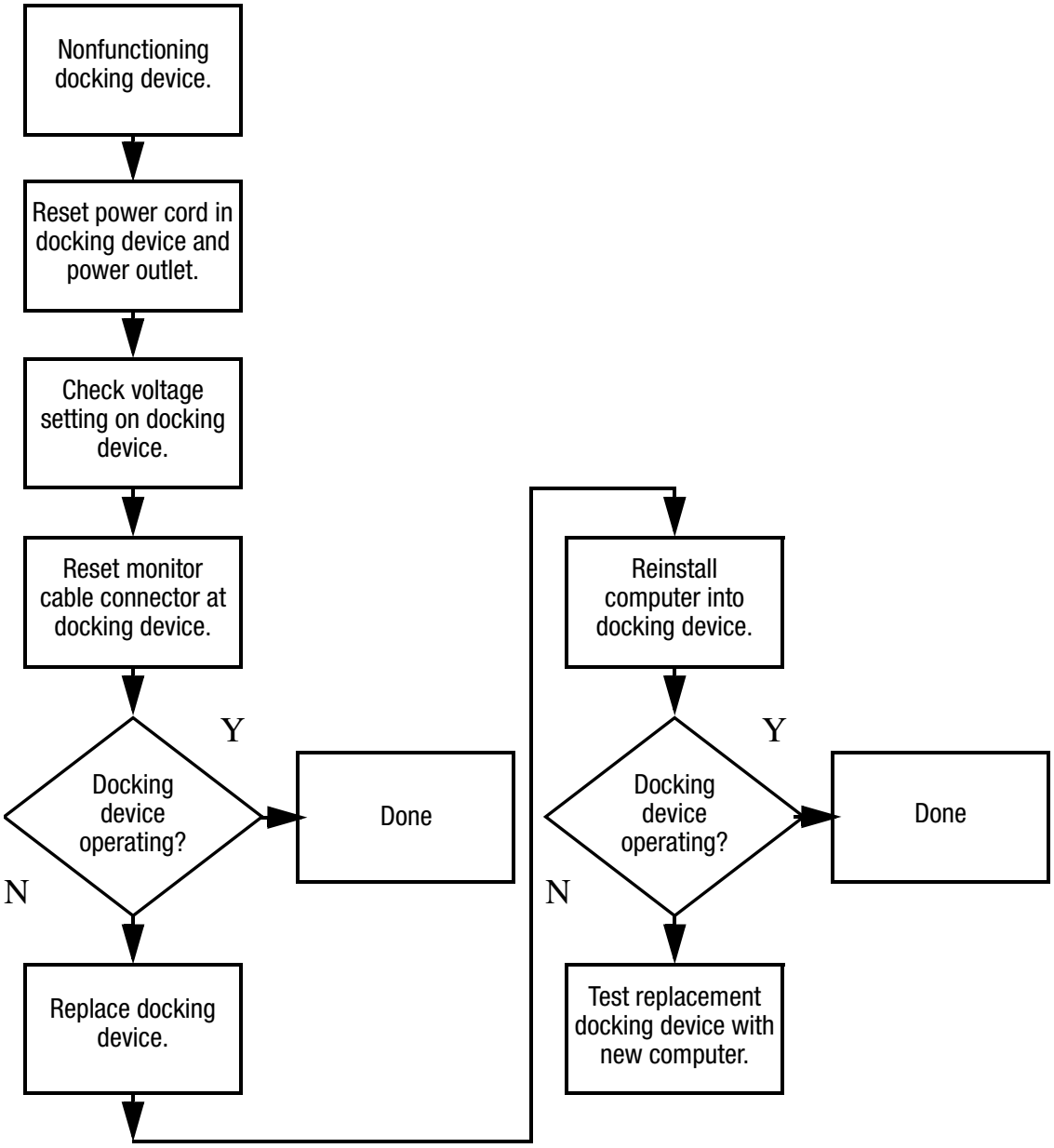

Downloaded from www.Manualslib.com manuals search engine

Flowchart 2.9—No Operating System (OS) Loading

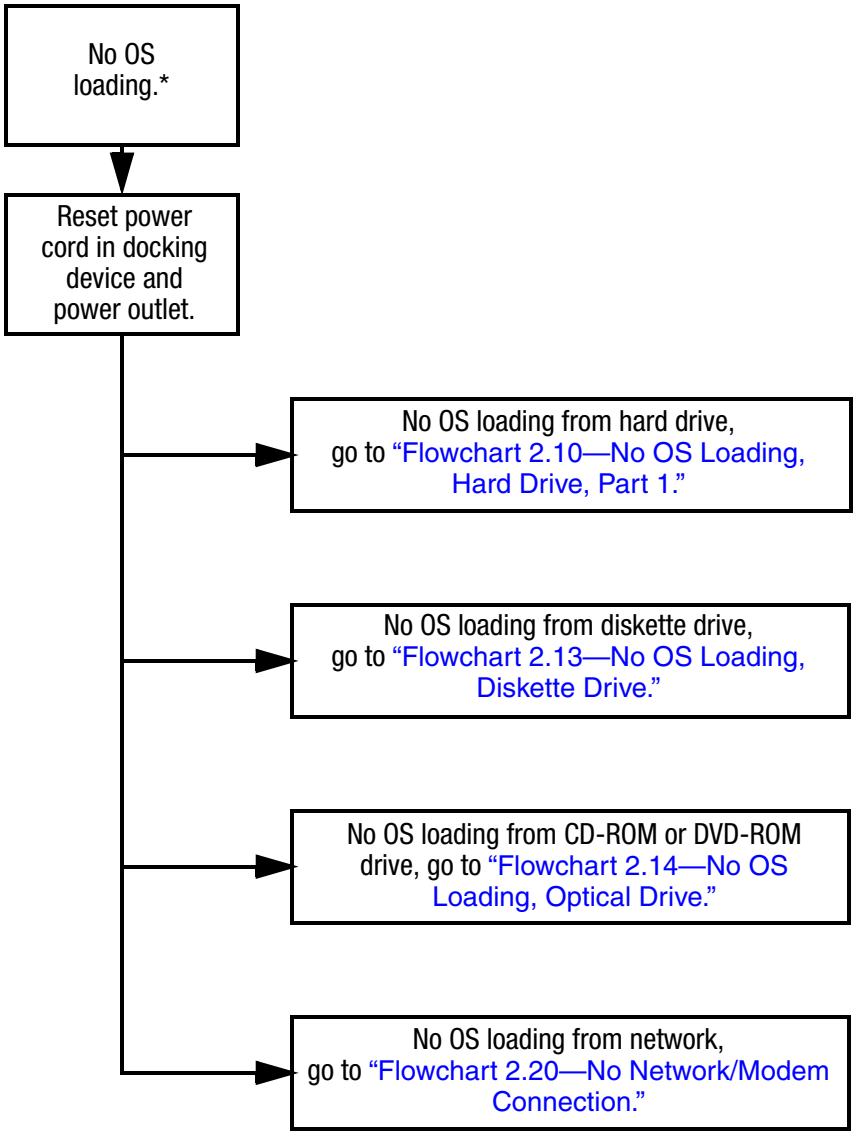

*NOTE: Before beginning troubleshooting, always check cable connections, cable ends, and drives for bent or damaged pins.

Downloaded from www.Manualslib.com manuals search engine

Flowchart 2.10—No OS Loading, Hard Drive, Part 1

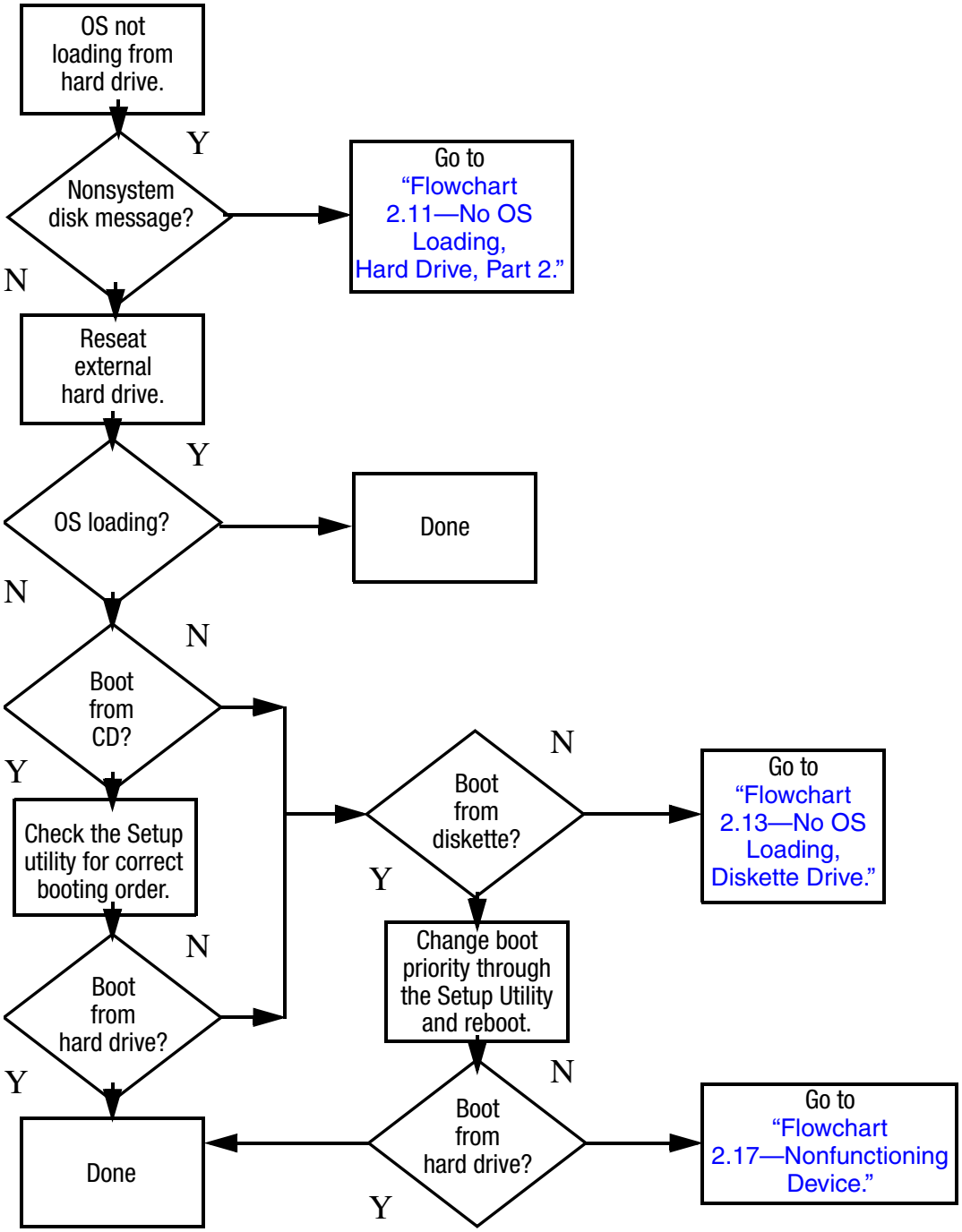

Downloaded from www.Manualslib.com manuals search engine

Flowchart 2.11—No OS Loading, Hard Drive, Part 2

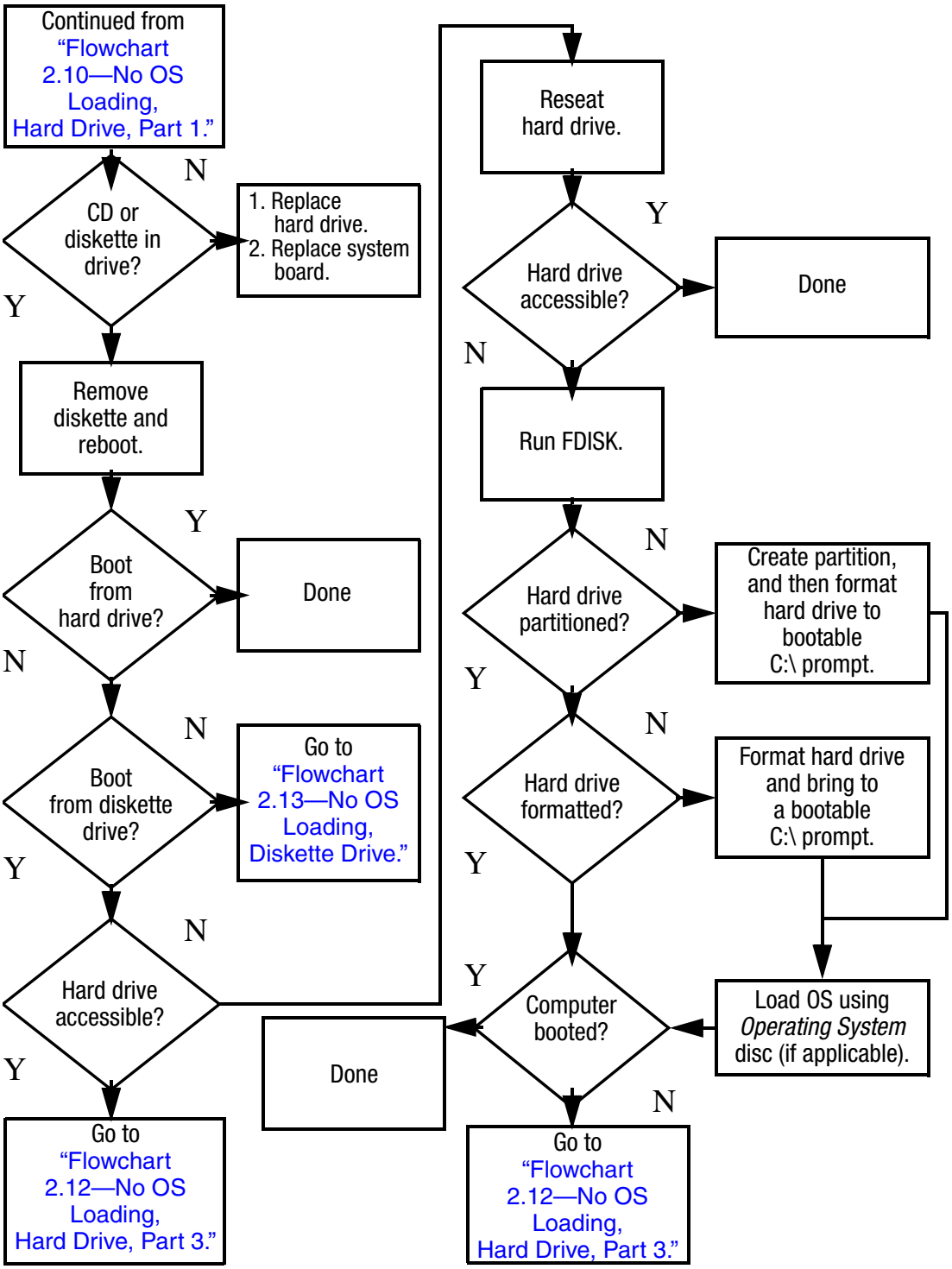

Downloaded from www.Manualslib.com manuals search engine

Flowchart 2.12—No OS Loading, Hard Drive, Part 3

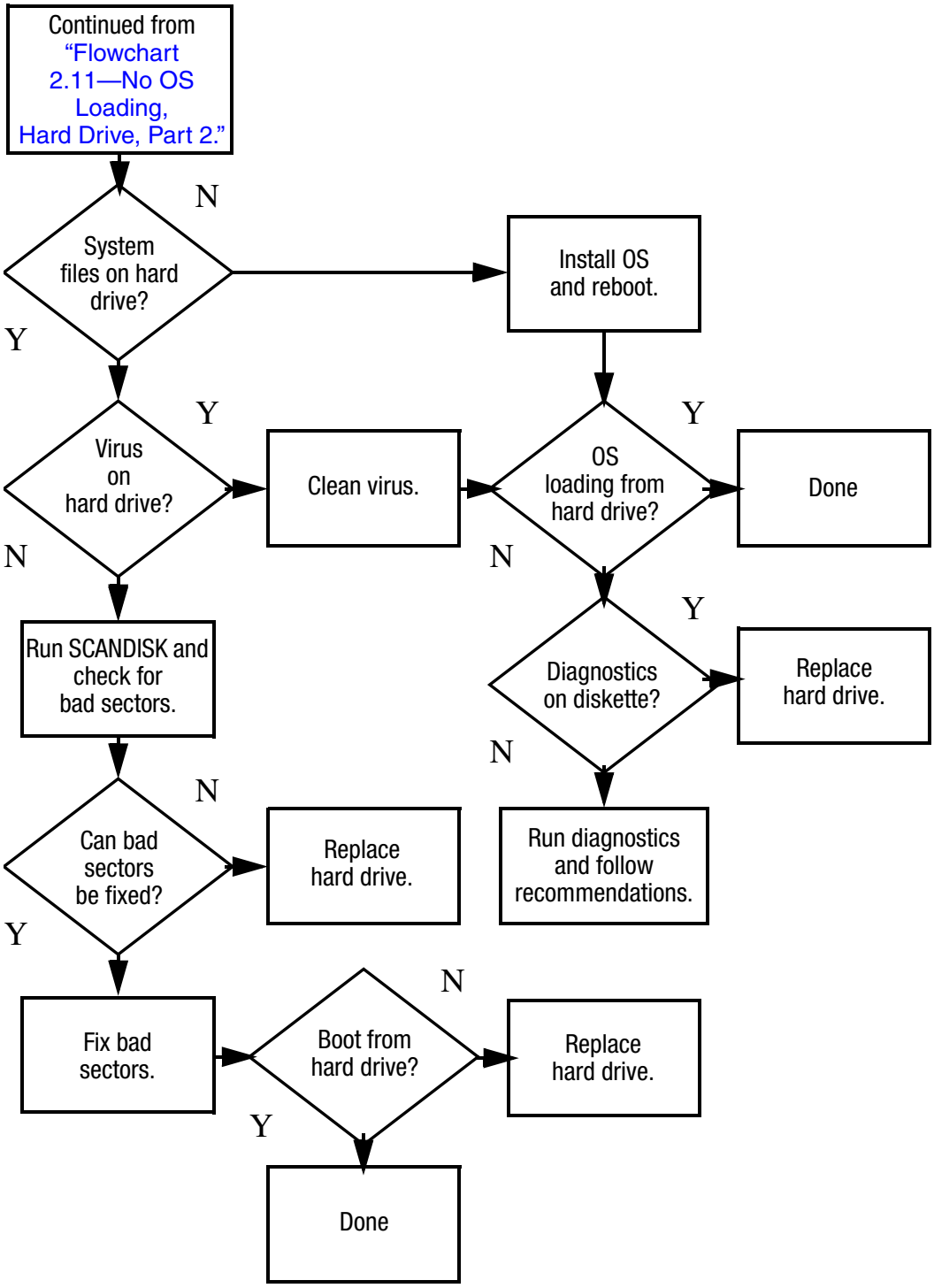

Downloaded from www.Manualslib.com manuals search engine

Flowchart 2.13—No OS Loading, Diskette Drive

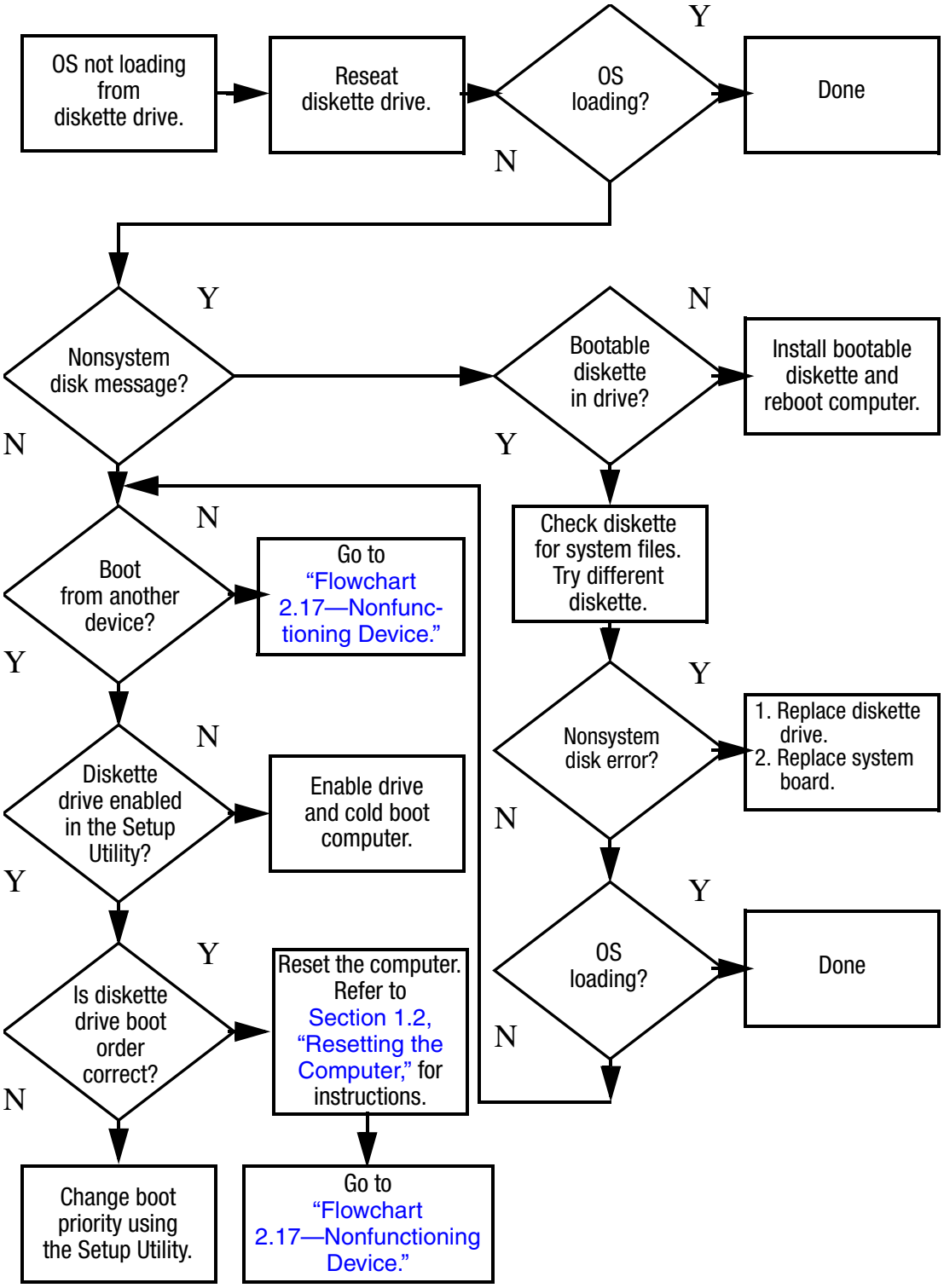

Downloaded from www.Manualslib.com manuals search engine

Flowchart 2.14—No OS Loading, Optical Drive

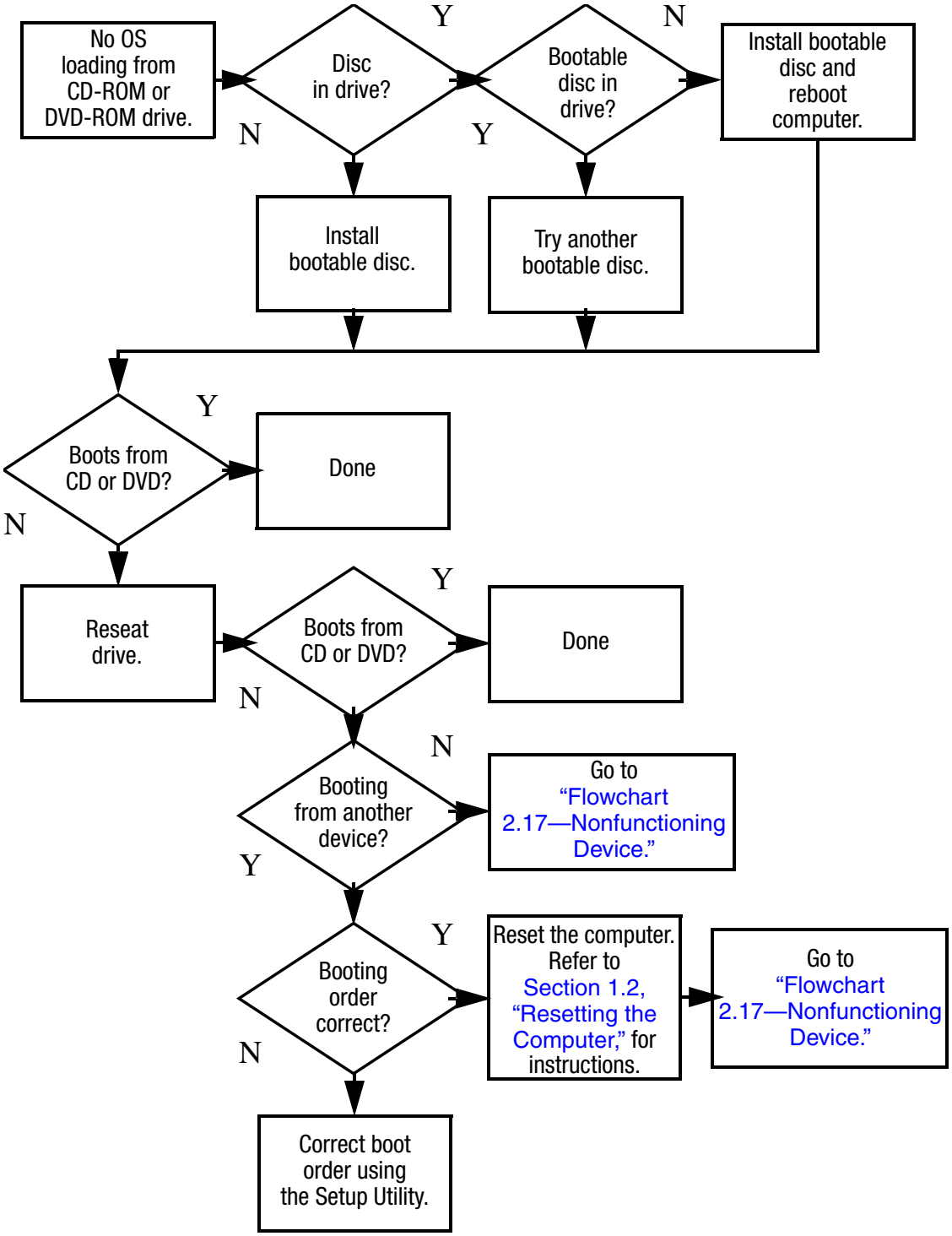

Downloaded from www.Manualslib.com manuals search engine

Flowchart 2.15—No Audio, Part 1

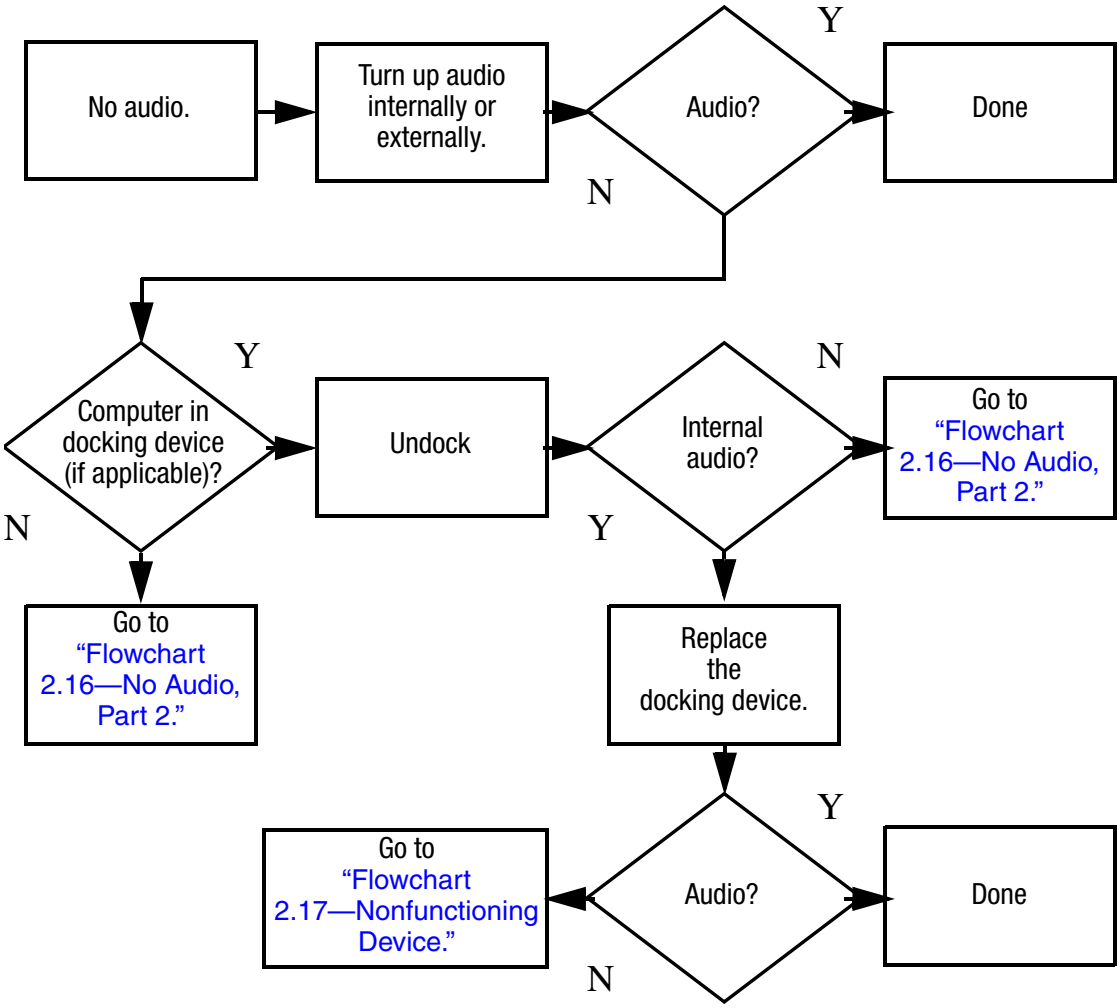

Downloaded from www.Manualslib.com manuals search engine

Flowchart 2.16—No Audio, Part 2

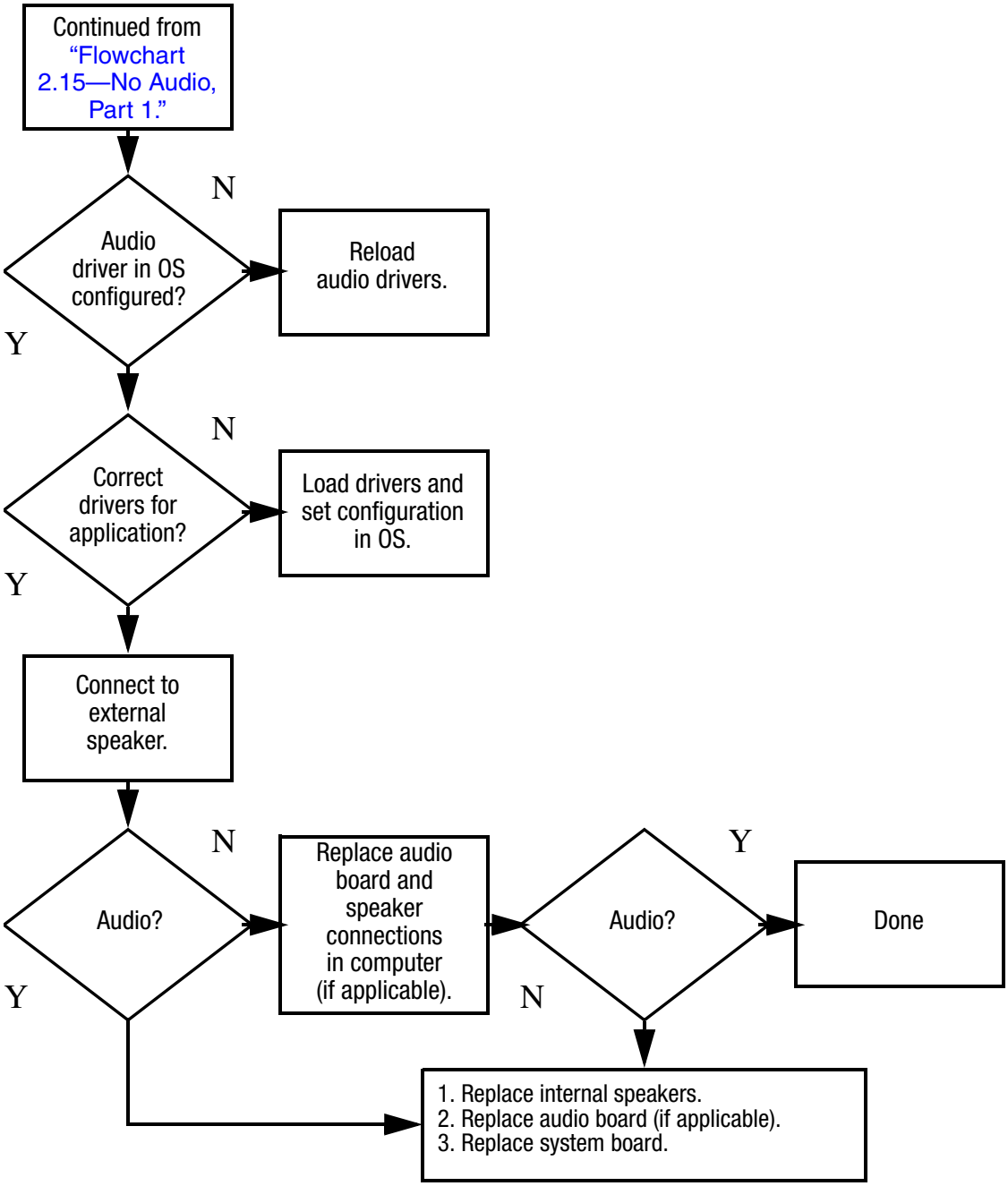

Downloaded from www.Manualslib.com manuals search engine

Flowchart 2.17—Nonfunctioning Device

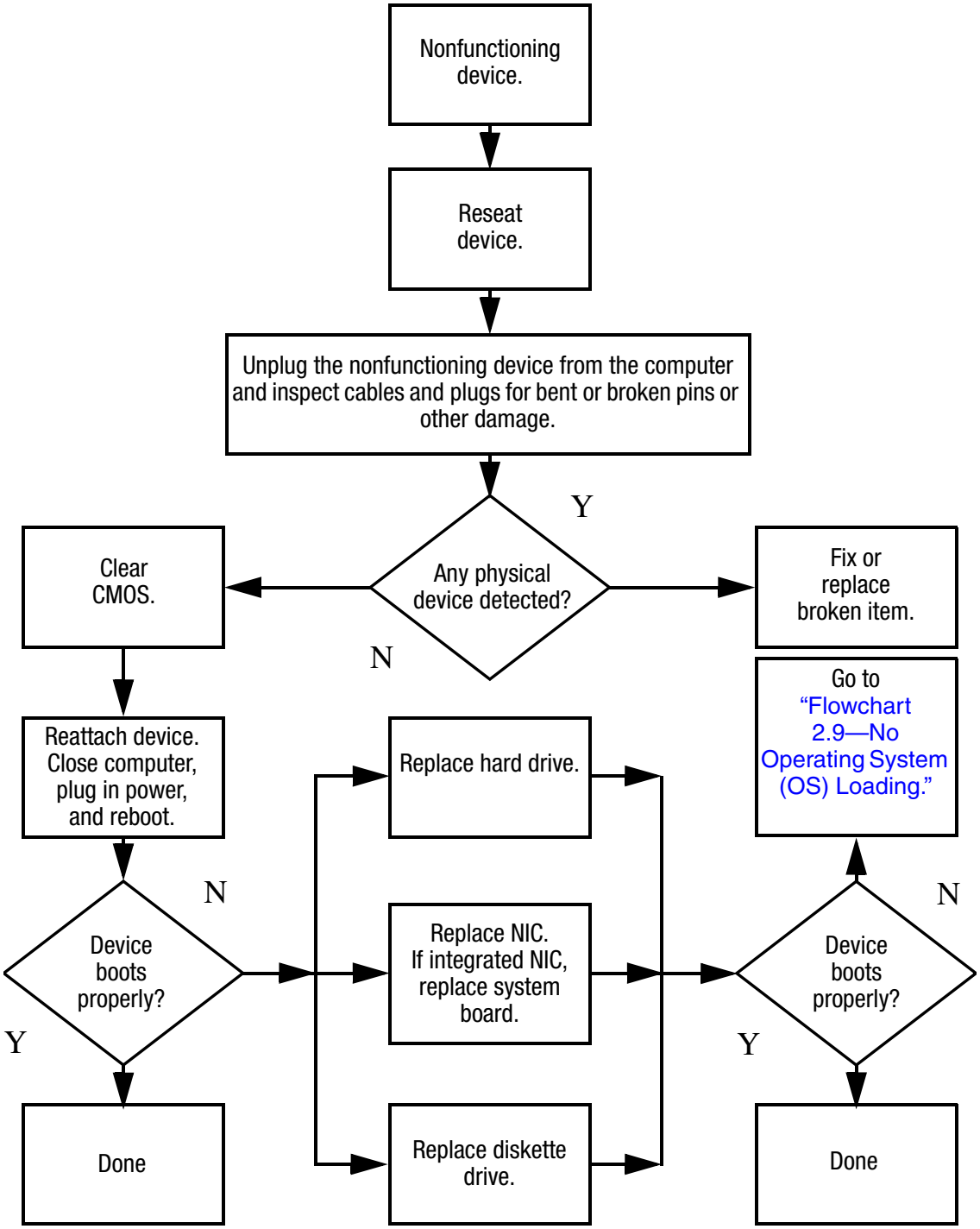

Downloaded from www.Manualslib.com manuals search engine

Flowchart 2.18—Nonfunctioning Keyboard

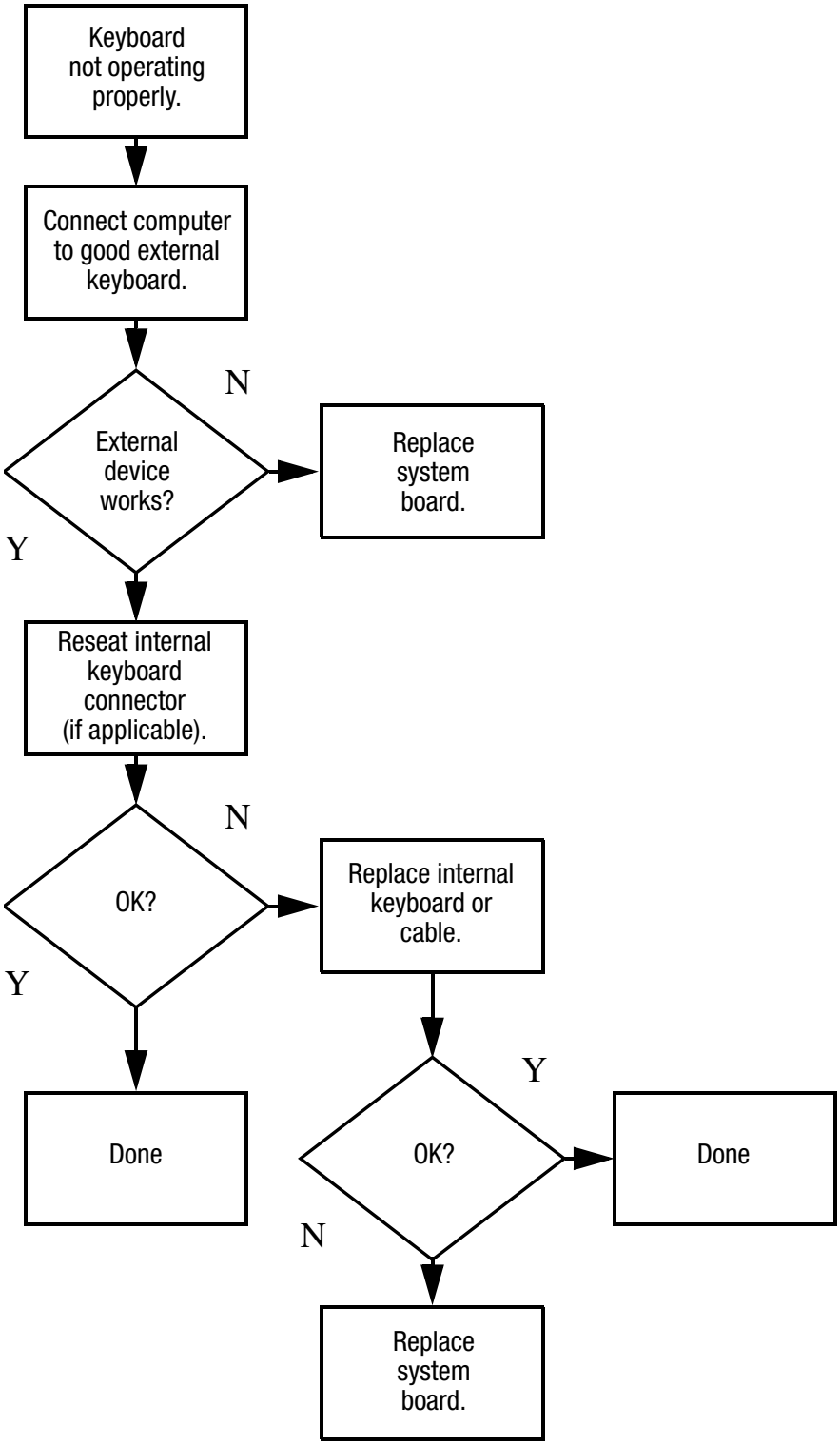

Downloaded from www.Manualslib.com manuals search engine

Flowchart 2.19—Nonfunctioning Pointing Device

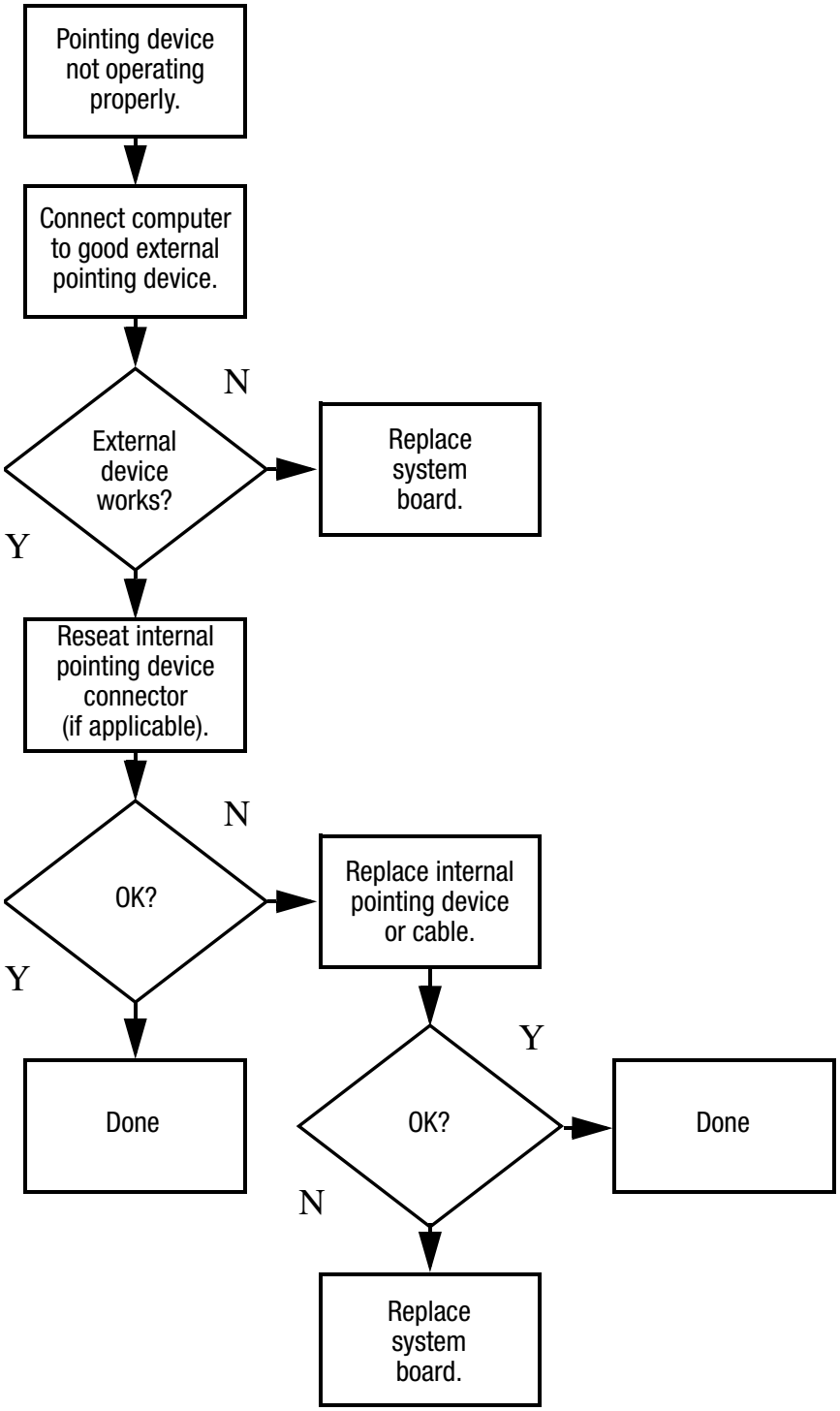

Downloaded from www.Manualslib.com manuals search engine

Flowchart 2.20—No Network/Modem Connection

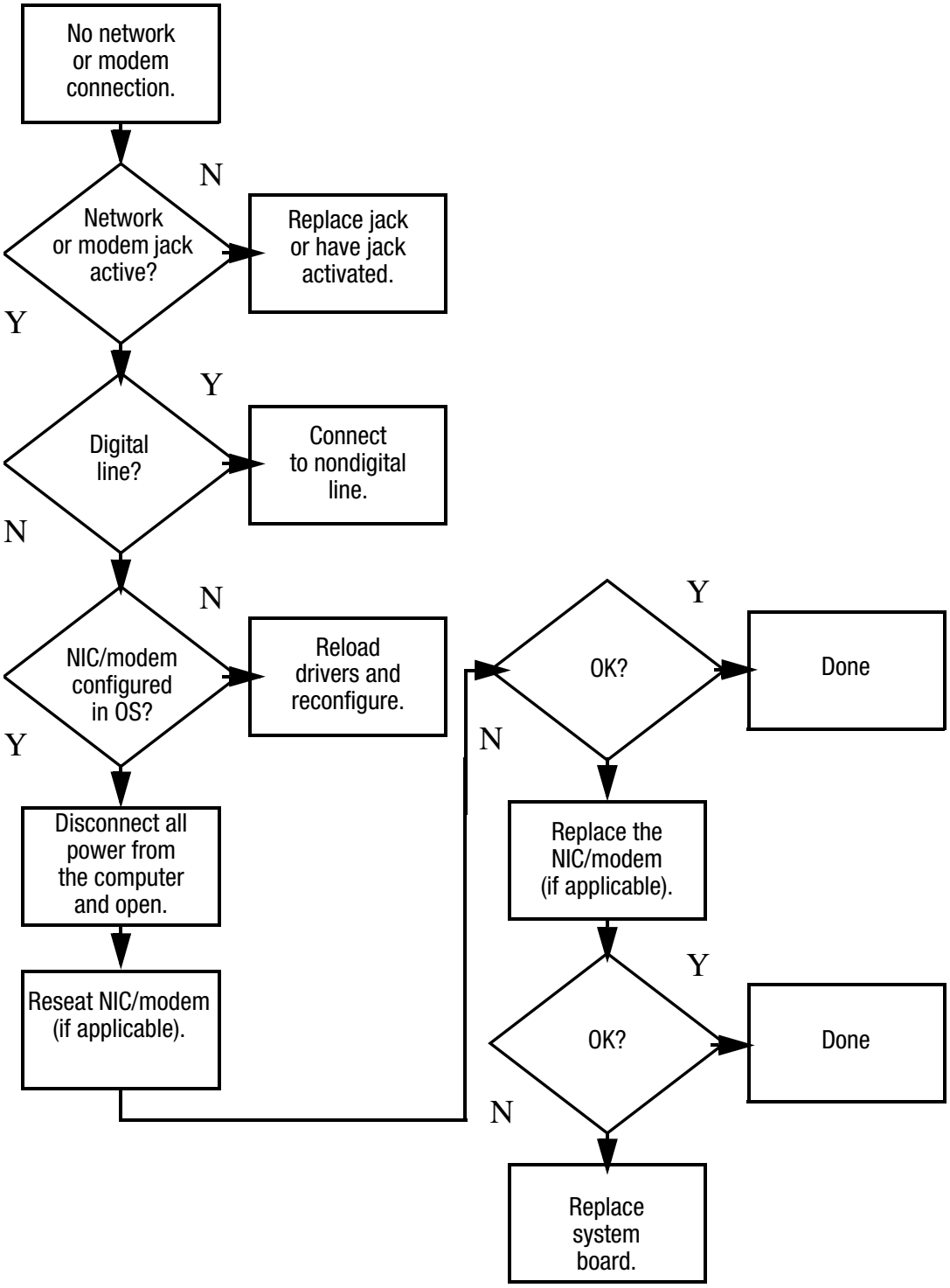

Downloaded from www.Manualslib.com manuals search engine

3

Illustrated Parts Catalog

This chapter provides an illustrated parts breakdown and a reference for spare part numbers and option part numbers.

3.1 Serial Number Location

When ordering parts or requesting information, provide the computer serial number and computer model number located on the bottom of the computer.

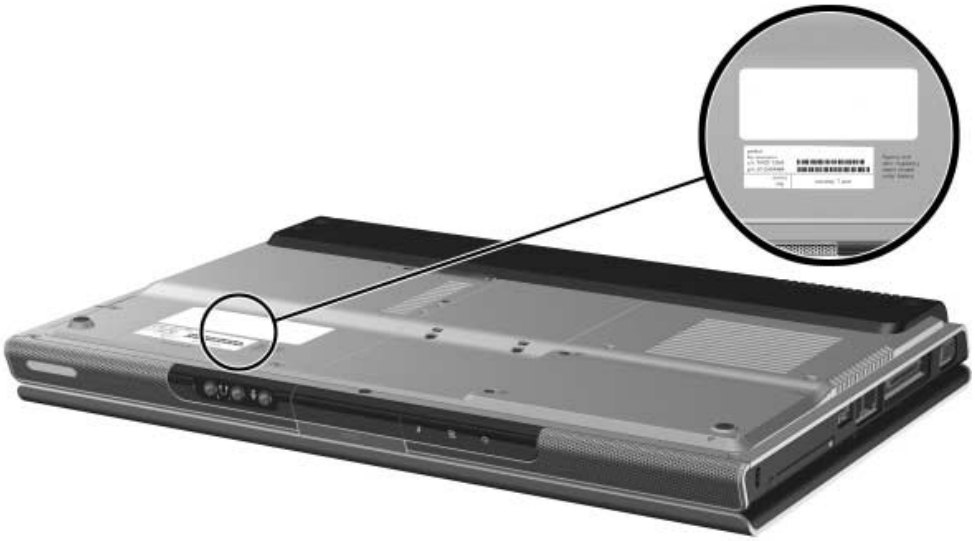

Serial Number Location

Downloaded from www.Manualslib.com manuals search engine

3.2 Computer Major Components

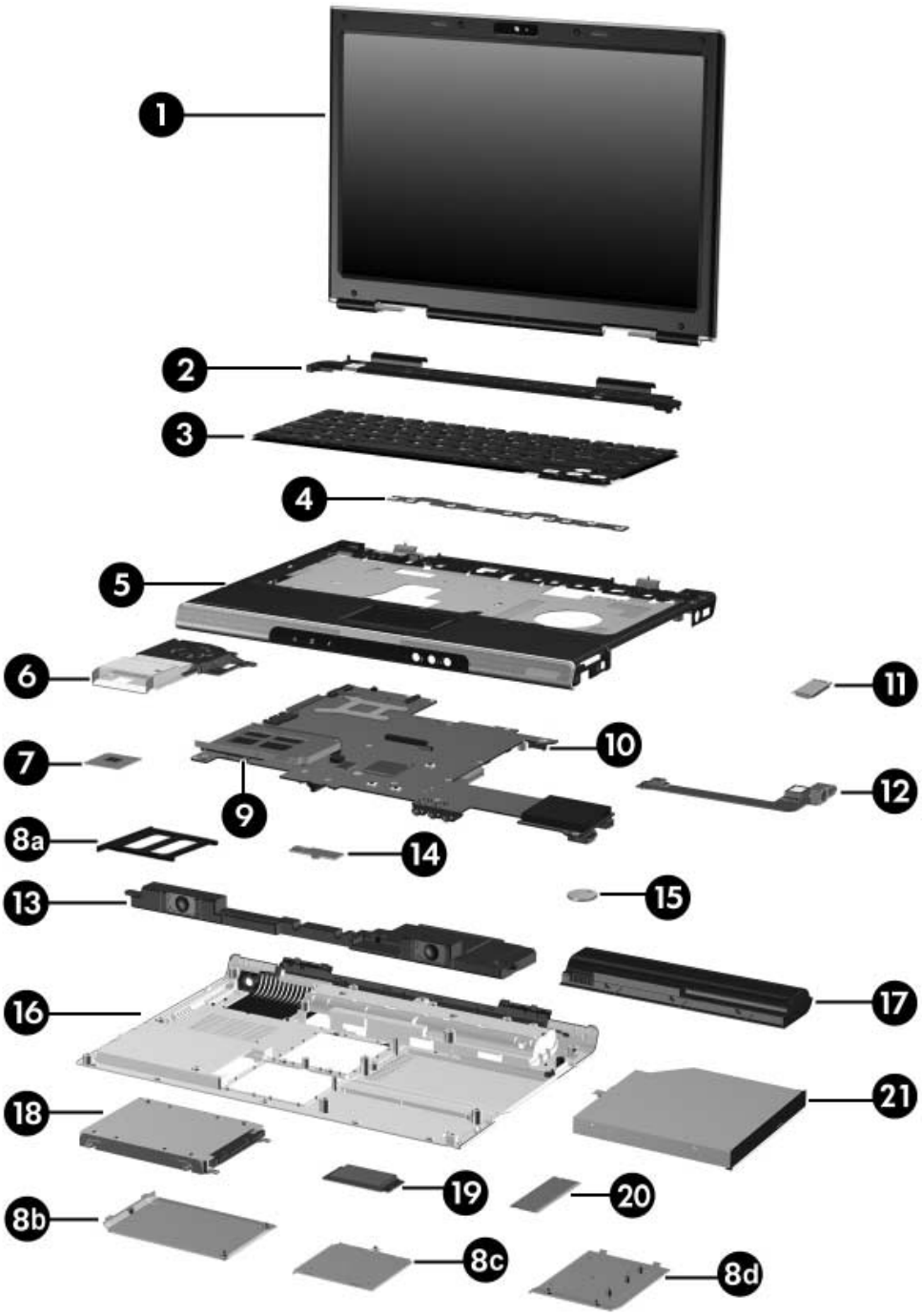

Computer Major Components

Downloaded from www.Manualslib.com manuals search engine

Table 3-1

Spare Parts: Computer Major Components

Item	Description	Spare Part Number
1	**Display assemblies** (include wireless antenna transceivers and cables)	
	With Web camera	
	14.0-inch, WXGA, SVA with BrightView	431091-001
	14.0-inch, WXGA	431827-001
	Without Web camera	
	14.0-inch, WXGA, SVA with BrightView	412338-001
	14.0-inch, WXGA	412336-001
	✎ Refer to Section 3.3, "Display Assembly Components," for display assembly internal component spare part number information.	
2	**Switch covers** (include wireless button and light)	
	For use on computer models with wireless capability	412391-001
	For use on computer models without wireless capability	412393-001
	For use on computer models with wireless capability sold at Best Buy	418238-001

Downloaded from www.Manualslib.com manuals search engine

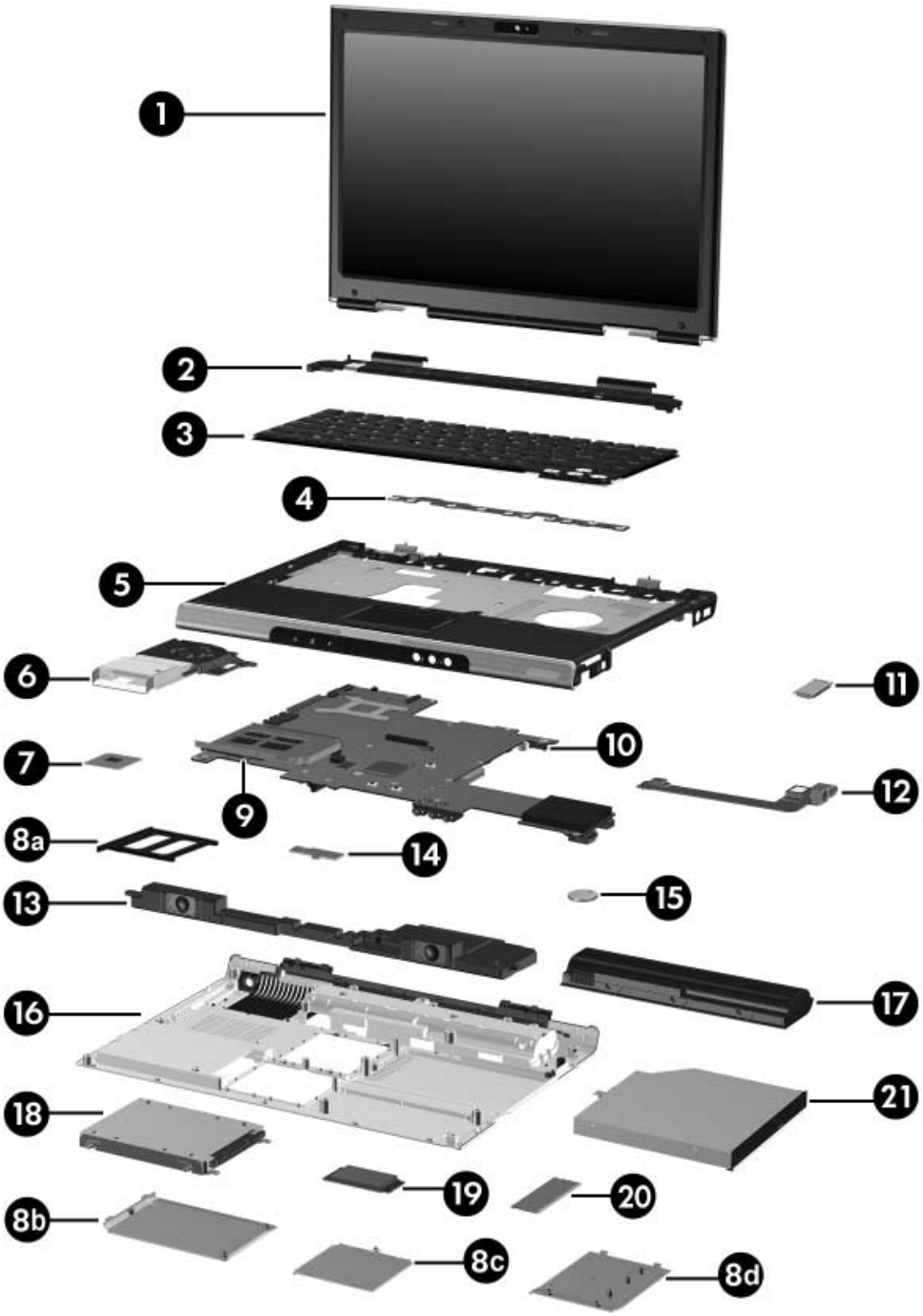

Computer Major Components

Downloaded from www.Manualslib.com manuals search engine

Table 3-1

Spare Parts: Computer Major Components *(Continued)*

Item	Description			Spare Part Number
3	**Keyboards**			
	Belgium	412374-A41	Saudi Arabia	412374-171
	Brazil	412374-201	Spain	412374-071
	Denmark	412374-081	Switzerland	412374-111
	France	412374-051	Taiwan	412374-AB1
	French Canada	412374-121	Thailand	412374-281
	Germany	412374-041	The United Kingdom	412374-031
	Greece	412374-DJ1		
	Israel	412374-BB1	Asia Pacific, Australia, Canada, Hong Kong, the People's Republic of China, and the United States	412374-001
	International	412374-B31		
	Italy	412374-061		
	Japan	412374-291		
	Korea	412374-AD1		
	Latin America	412374-161		
	Norway	412374-091		
	Portugal	412374-131		
4	**LED board** (includes cable, not illustrated)			412399-001
5	**Top covers** (include TouchPad)			
	For use on computer models with Web camera and microphone			412378-001
	For use on computer models without Web camera and microphone			412377-001
	For use on computer models sold at Best Buy			417665-001

Downloaded from www.Manualslib.com manuals search engine

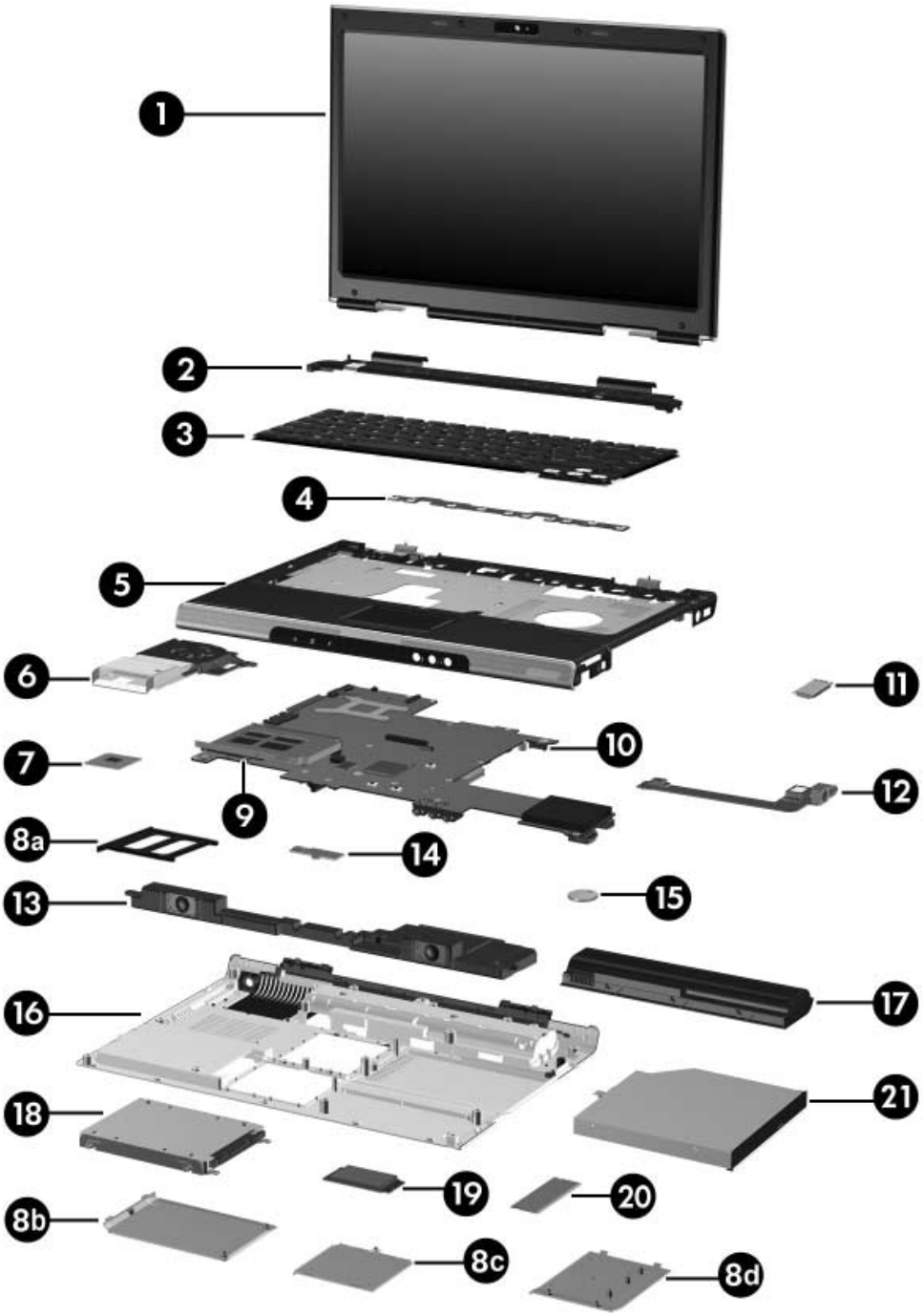

Computer Major Components

Downloaded from www.Manualslib.com manuals search engine

Table 3-1

Spare Parts: Computer Major Components *(Continued)*

Item	Description	Spare Part Number
6	**Fan/heat sink assembly** (includes thermal pad)	412397-001
7	**Processors** (include thermal pad)	
	Intel Core Duo T2500 (2.00-GHz)	412333-001
	Intel Core Duo T2400 (1.83-GHz)	412334-001
	Intel Core Duo T2300E (1.66-GHz)	419437-001
	Intel Core Duo T2250 (1.73-GHz)	430897-001
	Intel Core Duo T2300 (1.66-GHz)	412335-001
	Intel Core Duo T2050 (1.60-GHz)	430898-001
	Intel Core Solo T1350 (1.86-GHz)	430896-001
	Intel Core Solo T1300 (1.66-GHz)	412332-001
	Intel Celeron M 410 (1.46-GHz)	419436-001
	Plastics Kit	
	For use on computer models not sold at Best Buy	412384-001
	For use on computer models sold at Best Buy	417667-001
	Includes:	
8a	ExpressCard slot bezel	
8b	Hard drive cover (includes two captive screws)	
8c	Mini Card compartment cover (includes 2 captive screws)	
8d	Memory module compartment cover (includes 2 captive screws)	
9	**ExpressCard assembly**	412330-001
10	**System boards**	
	945GM for use on computer models with Web camera and microphone	430894-001
	945GM for use on computer models without Web camera and microphone	430893-001
	945GM for use on computer models sold at Best Buy	430895-001

Downloaded from www.Manualslib.com manuals search engine

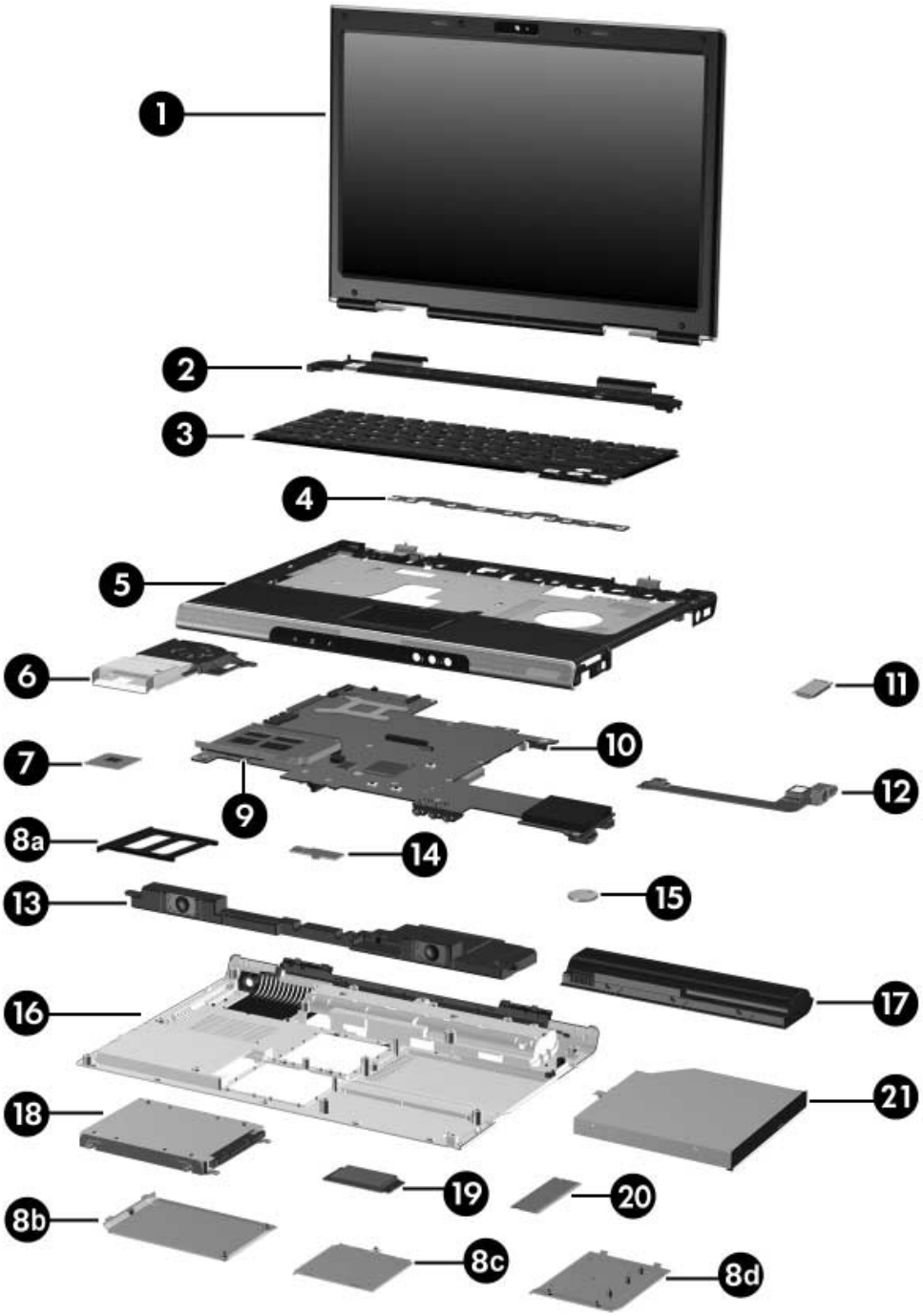

Computer Major Components

Downloaded from www.Manualslib.com manuals search engine

Table 3-1

Spare Parts: Computer Major Components *(Continued)*

Item	Description	Spare Part Number
10	**System boards** *(Continued)*	
	940GML for use on computer models with Web camera and microphone	430892-001
	940GM for use on computer models without Web camera and microphone	412238-001
11	**Bluetooth® module** (includes Bluetooth module cable)	412766-001
12	**USB/S-Video board**	412398-001
13	**Speaker assembly**	412395-001
14	**Menu control button board** (includes bracket and cable)	412401-001
15	**RTC battery**	412390-001
16	**Base enclosure**	
	For use on computer models with Web camera and microphone	412382-001
	For use on computer models without Web camera and microphone	412381-001
	For use on computer models sold at Best Buy	417666-001
	Rubber Feet Kit (includes computer feet and display bezel rubber screw covers)	412579-001
17	**Battery**	
	12-cell, 8.8-AHr	396600-001
	6-cell, 4.0-AHr	396601-001

Downloaded from www.Manualslib.com manuals search engine

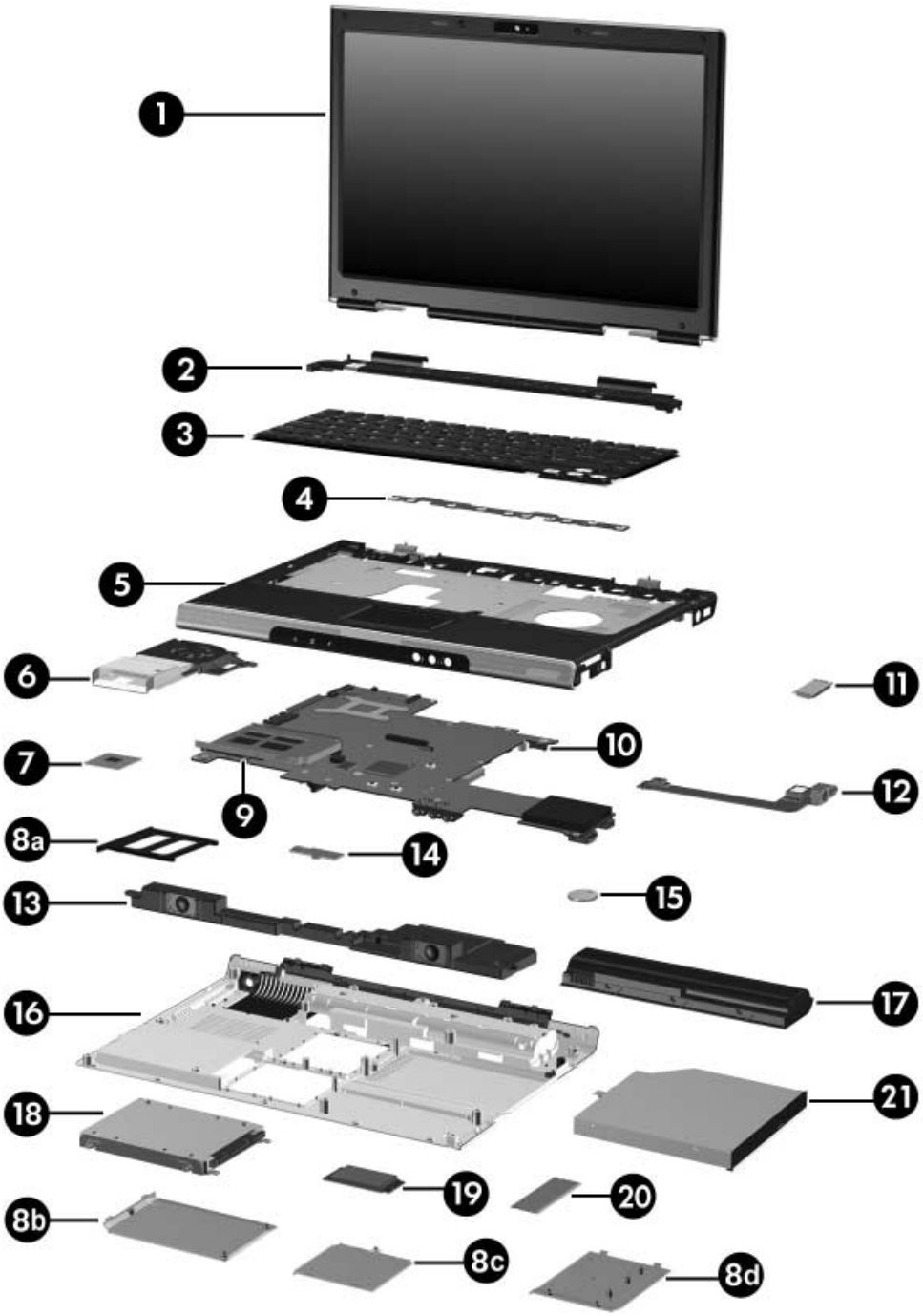

Computer Major Components

Downloaded from www.Manualslib.com manuals search engine

Table 3-1

Spare Parts: Computer Major Components *(Continued)*

Item	Description	Spare Part Number
18	**Hard drives** (include frame and connector)	
	5400-rpm, 100-GB	412367-001
	5400-rpm, 80-GB	412366-001
	5400-rpm, 60-GB	412365-001
	5400-rpm, 40-GB	412364-001
19	**Mini Card modules**	
	802.11a/b/g WLAN module for use in the countries listed below. These countries are categorized as most of the world (MOW 1).	407674-001
	Antigua & Barbuda Argentina Australia Bahamas Barbados Brunei Canada Chile Dominican Republic Guam Guatemala Hong Kong Panama India Indonesia Malaysia Mexico New Zealand Paraguay Saudi Arabia Taiwan The United States Vietnam	

Downloaded from www.Manualslib.com manuals search engine

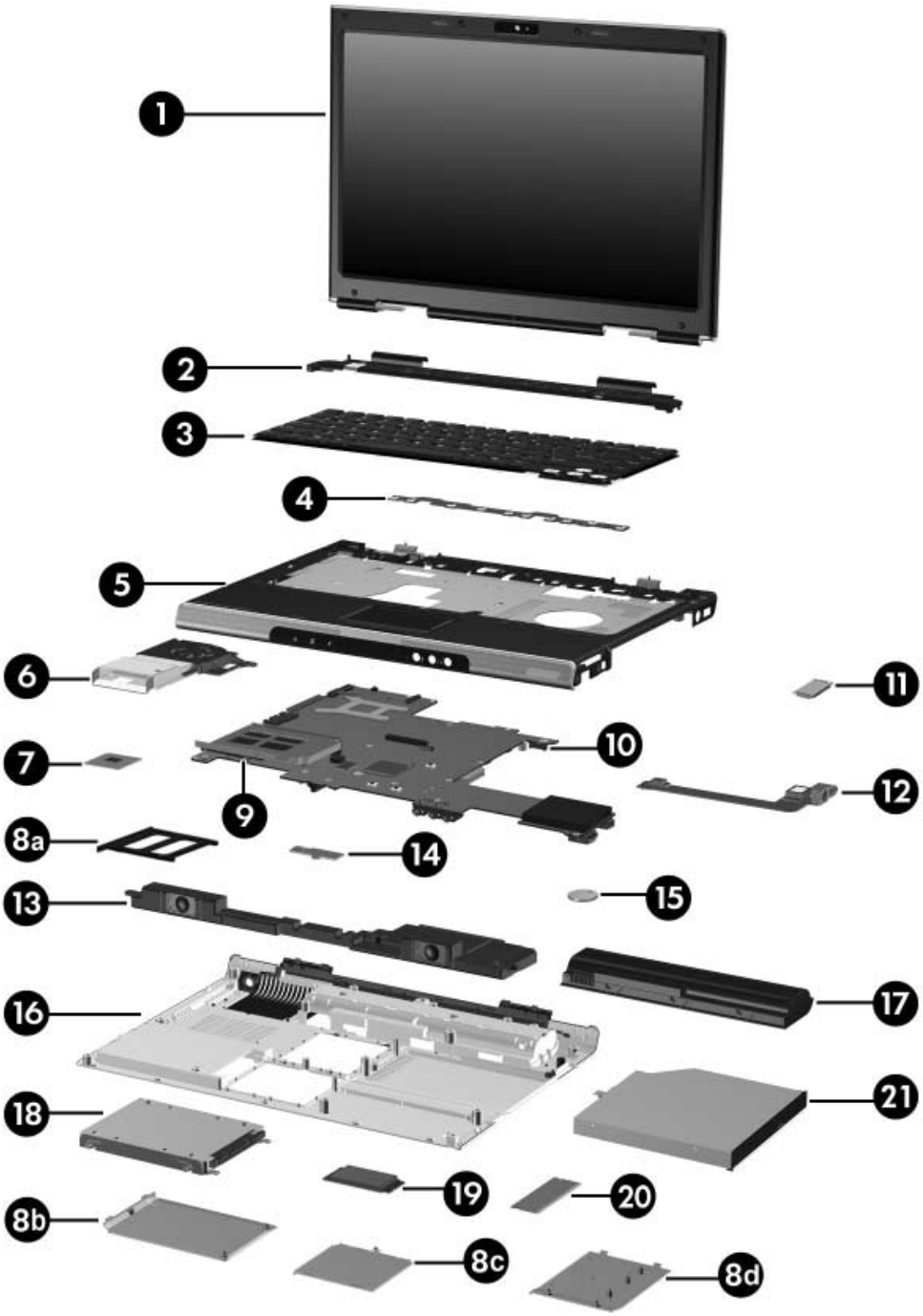

Computer Major Components

Downloaded from www.Manualslib.com manuals search engine

Table 3-1

Spare Parts: Computer Major Components *(Continued)*

Item	Description	Spare Part Number
19	**Mini Card modules** *(Continued)*	
	802.11a/b/g WLAN module for use in the countries listed below. These countries are categorized as most of the world (MOW 2). Aruba, Austria, Azerbaijan, Bahrain, Belgium, Bermuda, Bulgaria, Cayman Islands, Columbia, Croatia, Cyprus, The Czech Republic, Denmark, Egypt, El Salvador, Estonia, Finland, France, Georgia, Germany, Greece, Hungary, Iceland, Ireland, Italy, Latvia, Lebanon, The Philippines, Poland, Portugal, Romania, Russia, Serbia and Montenegro, Singapore, Slovakia, Liechtenstein, Lithuania, Luxembourg, Malta, Monaco, The Netherlands, Norway, Oman, Slovenia, South Africa, Spain, Sri Lanka, Sweden, Switzerland, Turkey, The United Kingdom, Uzbekistan	407674-002
	802.11a/b/g WLAN module for use in the countries listed below. These countries are categorized as the rest of the world (ROW). China, Ecuador, Haiti, Honduras, Pakistan, Peru, Qatar, South Korea, Uruguay, Venezuela	407674-003
	802.11a/b/g WLAN module for use in Japan	407674-291
	802.11b/g WLAN module HS MOW	407159-001
	802.11b/g WLAN module HS ROW	407159-002
	802.11b/g WLAN module GL	407674-004

Downloaded from www.Manualslib.com manuals search engine

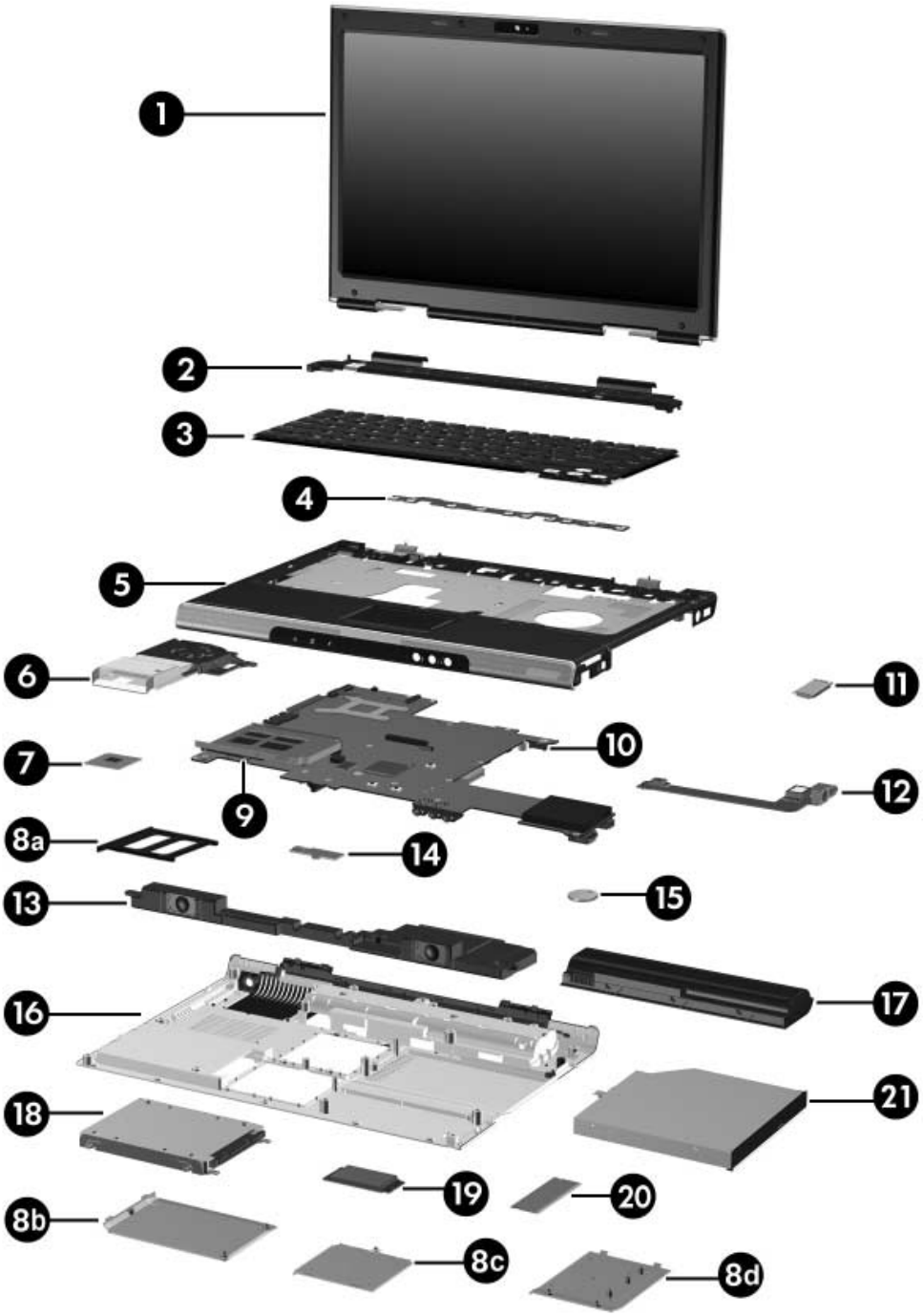

Computer Major Components

Downloaded from www.Manualslib.com manuals search engine

Table 3-1

Spare Parts: Computer Major Components *(Continued)*

Item	Description	Spare Part Number
20	**Memory modules**, 1-DIMM, DDR2	
	PC2-5300, 667-MHz	
	1024 MB	412363-001
	512 MB	412362-001
	256 MB	412361-001
	PC2-4200, 533-MHz	
	1024 MB	412360-001
	512 MB	412359-001
	256 MB	412358-001
	Secure Digital (SD) Memory Cards (not illustrated)	
	512-MB	407316-001
	256-MB	403573-001
21	**Optical drives** (include bezel)	
	24X DVD/CD-RW Combo Drive	412368-001
	8X DVD±RW/R and CD-RW Double-Layer Combo Drive	419438-001
	8X DVD±RW/R and CD-RW Double-Layer Combo Drive with LightScribe for use on computer models sold at Best Buy	419440-001
	8X DVD±RW/R and CD-RW Double-Layer Combo Drive with LightScribe	419439-001
	8X DVD±RW/R and CD-RW Double-Layer Combo Drive with LightScribe and “HLDS”	412373-001

Downloaded from www.Manualslib.com manuals search engine

3.3 Display Assembly Components

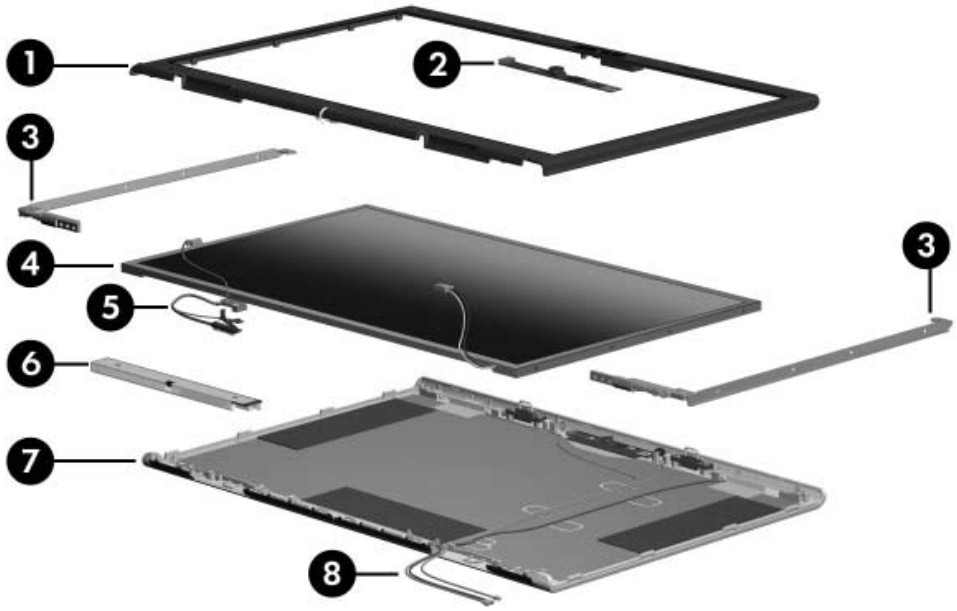

Display Assembly Components

Table 3-2

Display Assembly Components

Spare Part Number Information

Item	Description	Spare Part Number
1	**Display bezels**	
	for use on computer models with Web camera and microphone	412343-001
	for use on computer models without Web camera and microphone	412342-001
2	**Web camera**	412347-001
	USB camera cable (not illustrated)	412348-001

Downloaded from www.Manualslib.com manuals search engine

Table 3-2

Display Assembly Components

Spare Part Number Information

Item	Description	Spare Part Number
3	**Display Hinge Kit**	412355-001
4	**Display panels**	
	14.0-inch, WXGA, SVA with BrightView	412341-001
	14.0-inch, WXGA	412340-001
	14.0-inch, WXGA, SVA with BrightView for use on computer models sold at Best Buy	414032-001
5	**Display cables**	
	for use on computer models with Web camera and microphone	412352-001
	for use on computer models without Web camera and microphone	412353-001
6	**Display inverter**	412345-001
7	**Display enclosures** (include wireless antenna transceivers and cables)	412350-001
	for use on computer models with Web camera and microphone	412349-001
	for use on computer models without Web camera and microphone	
	Display Screw Kit (not illustrated)	417713-001
	Rubber Feet Kit (includes display bezel rubber screw covers; not illustrated)	412579-001

Downloaded from www.Manualslib.com manuals search engine

3.4 Mass Storage Devices

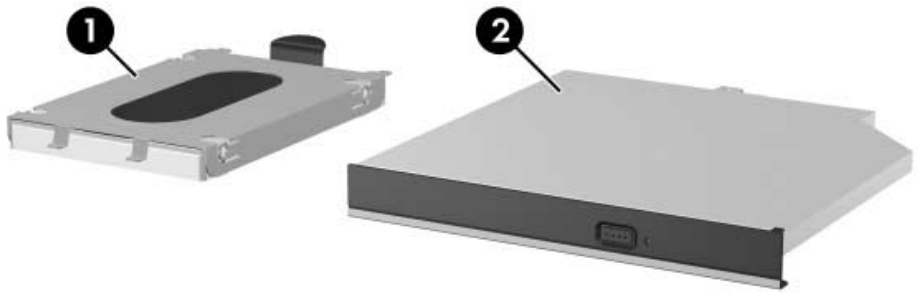

Mass Storage Devices

Downloaded from www.Manualslib.com manuals search engine

Table 3-3

Mass Storage Devices

Spare Part Number Information

Item	Description	Spare Part Number
1	**Hard drives** (include frame and connector)	
	5400-rpm	
	100-GB	412367-001
	80-GB	412366-001
	60-GB	412365-001
	40-GB	412364-001
2	**Optical drives**	
	24X DVD/CD-RW Combo Drive	412368-001
	8X DVD±RW/R and CD-RW Double-Layer Combo Drive	419438-001
	8X DVD±RW/R and CD-RW Double-Layer Combo Drive with LightScribe for use on computer models sold at Best Buy	419440-001
	8X DVD±RW/R and CD-RW Double-Layer Combo Drive with LightScribe	419439-001
	8X DVD±RW/R and CD-RW Double-Layer Combo Drive with LightScribe and “HLDS”	412373-001
	USB digital drive (not illustrated)	364727-001

Downloaded from www.Manualslib.com manuals search engine

3.5 Plastics Kit

Plastics Kit Contents

Table 3-4

Plastics Kit

Spare Part Number Information

Item	Description	Spare Part Number
	Plastics Kit	
	For use on computer models not sold at Best Buy	412384-001
	For use on computer models sold at Best Buy	417667-001
	Includes:	
1	ExpressCard slot bezel	
2	Hard drive cover	
3	Mini Card compartment cover	
4	Memory module compartment cover	

Downloaded from www.Manualslib.com manuals search engine

3.6 Miscellaneous

Table 3-5

Spare Parts: Miscellaneous (not illustrated)

Description	Spare Part Number
Logo Kit	412388-001
HP backpack	405527-001
Wired headset with volume control	371693-001
HP Mobile Remote Control	407313-001
USB travel mouse	309674-001
HP xc2000 Notebook All-in-One Media Cable	404577-001
HP 65W AC Adapter	402018-001
Screw Kit (includes the following screws; refer to Appendix A, "Screw Listing," for more information on specifications and usage) ■ Phillips PM2.5×6.0 screw ■ Phillips PM2.5×4.0 screw ■ Phillips PM2.0×8.5 screw ■ Phillips PM2.0×7.0 screw ■ Black Phillips PM2.0×5.0 screw ■ Silver Phillips PM2.0×5.0 screw ■ Phillips PM2.0×3.0 screw ■ Phillips PM2.0×2.0 screw ■ Phillips PM1.5×3.5 screw ■ Phillips PM1.5×2.0 screw	412386-001

Downloaded from www.Manualslib.com manuals search engine

Table 3-5

Spare Parts: Miscellaneous (not illustrated) *(Continued)*

Description	Spare Part Number
Power cords	
For use in:	
Australia and New Zealand	394279-011
Belgium, Europe, Finland, France, Germany, Greece, the Netherlands, Norway, Portugal, Spain, and Sweden	394279-021
Brazil	394279-201
Canada, French Canada, Latin America, Thailand, and the United States	394279-001
Denmark	394279-081
Hong Kong and the United Kingdom	394279-031
India	394279-D61
Israel	394279-BB1
Italy	394279-061
Japan	394279-291
Korea	394279-AD1
People's Republic of China	394279-AA1
Switzerland	394279-111
Taiwan	394279-AB1

Downloaded from www.Manualslib.com manuals search engine

3.7 Sequential Part Number Listing

Table 3-6

Spare Parts: Sequential Part Number Listing

Spare Part Number	Description
309674-001	USB travel mouse
364727-001	USB digital drive (not illustrated)
371693-001	Wired headset with volume control
394279-001	Power cord for use in Canada, French Canada, Latin America, Thailand, and the United States
394279-011	Power cord for use in Australia and New Zealand
394279-021	Power cord for use in Belgium, Europe, Finland, France, Germany, Greece, the Netherlands, Norway, Portugal, Spain, and Sweden
394279-031	Power cord for use in Hong Kong and the United Kingdom
394279-061	Power cord for use in Italy
394279-081	Power cord for use in Denmark
394279-111	Power cord for use in Switzerland
394279-201	Power cord for use in Brazil
394279-291	Power cord for use in Japan
394279-AA1	Power cord for use in the People's Republic of China
394279-AB1	Power cord for use in Taiwan
394279-AD1	Power cord for use in Korea

Downloaded from www.Manualslib.com manuals search engine

Table 3-6

Spare Parts: Sequential Part Number Listing *(Continued)*

Spare Part Number	Description
394279-BB1	Power cord for use in Israel
394279-D61	Power cord for use in India
396600-001	12-cell, 8.8-AHr battery
396601-001	6-cell, 4.0-AHr battery
402018-001	HP 65W AC Adapter
403573-001	256-MB SD Memory Card
404577-001	HP xc2000 Notebook All-in-One Media Cable
405527-001	HP backpack
407159-001	802.11b/g WLAN Mini Card module HS MOW
407159-002	802.11b/g WLAN Mini Card module HS ROW
407313-001	HP Mobile Remote Control
407316-001	512-MB SD Memory Card
407674-001	802.11a/b/g WLAN Mini Card module for use in the MOW 1 countries listed below.
Antigua & Barbuda Argentina Australia Bahamas Barbados Brunei	Canada Chile Dominican Republic Guam Guatemala	Hong Kong Panama India Indonesia Malaysia Mexico	New Zealand Paraguay Saudi Arabia Taiwan The United States Vietnam

Downloaded from www.Manualslib.com manuals search engine

Table 3-6

Spare Parts: Sequential Part Number Listing *(Continued)*

Spare Part Number	Description		
407674-002	802.11a/b/g WLAN Mini Card module for use in the MOW 2 countries listed below.		
Aruba	Denmark	Lebanon	Monaco
Austria	Egypt	The Philippines	The Netherlands
Azerbaijan	El Salvador	Poland	Norway
Bahrain	Estonia	Portugal	Oman
Belgium	Finland	Romania	Slovenia
Bermuda	France	Russia	South Africa
Bulgaria	Georgia	Serbia and Montenegro	Spain
Cayman Islands	Germany	Singapore	Sri Lanka
Columbia	Greece	Slovakia	Sweden
Croatia	Hungary	Liechtenstein	Switzerland
Cyprus	Iceland	Lithuania	Turkey
The Czech Republic	Ireland	Luxembourg	The United Kingdom
	Italy	Malta	Uzbekistan
	Latvia		
407674-003	802.11a/b/g WLAN Mini Card module for use in the ROW countries listed below.		
China	Honduras	Qatar	Uruguay
Ecuador	Pakistan	South Korea	Venezuela
Haiti	Peru		
407674-004	802.11b/g WLAN Mini Card module GL		
407674-291	802.11a/b/g WLAN Mini Card module for use Japan		

Downloaded from www.Manualslib.com manuals search engine

Table 3-6

Spare Parts: Sequential Part Number Listing *(Continued)*

Spare Part Number	Description
412238-001	940GM system board for use on computer models without Web camera and microphone
412330-001	ExpressCard assembly
412332-001	Intel Core Solo T1300 (1.66-GHz) processor (includes thermal pad)
412333-001	Intel Core Duo T2500 (2.00-GHz) processor (includes thermal pad)
412334-001	Intel Core Duo T2400 (1.83-GHz) processor (includes thermal pad)
412335-001	Intel Core Duo T2300 (1.66-GHz) processor (includes thermal pad)
412336-001	14.0-inch, WXGA display assembly (includes wireless antenna transceivers and cables)
412338-001	14.0-inch, WXGA, SVA with BrightView display assembly (includes wireless transceivers and cables)
412340-001	14.0-inch, WXGA display panel
412341-001	14.0-inch, WXGA, SVA display panel with BrightView
412342-001	Display bezel for use on computer models without Web camera and microphone
412343-001	Display bezel for use on computer models with Web camera and microphone

Downloaded from www.Manualslib.com manuals search engine

Table 3-6

Spare Parts: Sequential Part Number Listing *(Continued)*

Spare Part Number	Description
412345-001	Display inverter
412347-001	Web camera
412348-001	USB camera cable
412349-001	Display enclosure for use on computer models without Web camera and microphone
412350-001	Display enclosure for use on computer models with Web camera and microphone
412352-001	Display cable for use on computer models with Web camera and microphone
412353-001	Display cable for use on computer models without Web camera and microphone
412355-001	Display hinges
412358-001	1-DIMM, DDR2, PC2-4200, 533-MHz, 256-MB memory module
412359-001	1-DIMM, DDR2, PC2-4200, 533-MHz, 512-MB memory module
412360-001	1-DIMM, DDR2, PC2-4200, 533-MHz, 1024-MB memory module
412361-001	1-DIMM, DDR2, PC2-5300, 667-MHz, 256-MB memory module
412362-001	1-DIMM, DDR2, PC2-5300, 667-MHz, 512-MB memory module

Downloaded from www.Manualslib.com manuals search engine

Table 3-6

Spare Parts: Sequential Part Number Listing *(Continued)*

Spare Part Number	Description
412363-001	1-DIMM, DDR2, PC2-5300, 667-MHz, 1024-MB memory module
412364-001	5400-rpm, 40-GB hard drive (includes frame and connector)
412365-001	5400-rpm, 60-GB hard drive (includes frame and connector)
412366-001	5400-rpm, 80-GB hard drive (includes frame and connector)
412367-001	5400-rpm, 100-GB hard drive (includes frame and connector)
412368-001	24X DVD/CD-RW Combo Drive
412373-001	8X DVD±RW/R and CD-RW Double-Layer Combo Drive with LightScribe and “HLDS”
412374-001	Keyboard for use in the Asia Pacific, Australia, Canada, Hong Kong, the People’s Republic of China, and the United States
412374-031	Keyboard for use in the United Kingdom
412374-041	Keyboard for use in Germany
412374-051	Keyboard for use in France
412374-061	Keyboard for use in Italy
412374-071	Keyboard for use in Spain
412374-081	Keyboard for use in Denmark
412374-091	Keyboard for use in Norway
412374-111	Keyboard for use in Switzerland

Downloaded from www.Manualslib.com manuals search engine

Table 3-6

Spare Parts: Sequential Part Number Listing *(Continued)*

Spare Part Number	Description
412374-121	Keyboard for use in French Canada
412374-131	Keyboard for use in Portugal
412374-161	Keyboard for use in Latin America
412374-171	Keyboard for use in Saudi Arabia
412374-201	Keyboard for use in Brazil
412374-281	Keyboard for use in Thailand
412374-291	Keyboard for use in Japan
412374-A41	Keyboard for use in Belgium
412374-AB1	Keyboard for use in Taiwan
412374-AD1	Keyboard for use in Korea
412374-B31	Keyboard for use internationally
412374-BB1	Keyboard for use in Israel
412374-DJ1	Keyboard for use in Greece
412377-001	Top cover for use on computer models without Web camera and microphone (includes TouchPad)
412378-001	Top cover for use on computer models with Web camera and microphone (includes TouchPad)
412381-001	Base enclosure for use on computer models without Web camera and microphone
412382-001	Base enclosure for use on computer models with Web camera and microphone

Downloaded from www.Manualslib.com manuals search engine

Table 3-6

Spare Parts: Sequential Part Number Listing *(Continued)*

Spare Part Number	Description
412384-001	Plastics Kit
412386-001	Screw Kit
412388-001	Logo Kit
412390-001	RTC battery
412391-001	Switch cover for use on computer models with wireless capability (includes wireless button and light)
412393-001	Switch cover for use on computer models without wireless capability (includes wireless button and light)
412395-001	Speaker assembly
412397-001	Fan/heat sink assembly (includes thermal pad)
412398-001	USB/S-Video board
412399-001	LED board (includes cable, not illustrated)
412401-001	Menu control button board (includes bracket and cable)
412579-001	Rubber Feet Kit (includes computer feet used on base enclosure and display bezel rubber screw covers)
412766-001	Bluetooth module (includes Bluetooth module cable)
414032-001	14.0-inch, WXGA, SVA display panel with BrightView for use on computer models sold at Best Buy
419438-001	8X DVD±RW/R and CD-RW Double-Layer Combo Drive
419439-001	8X DVD±RW/R and CD-RW Double-Layer Combo Drive with LightScribe

Downloaded from www.Manualslib.com manuals search engine

Table 3-6

Spare Parts: Sequential Part Number Listing *(Continued)*

Spare Part Number	Description
419440-001	8X DVD±RW/R and CD-RW Double-Layer Combo Drive with LightScribe for use on computer models sold at Best Buy
417665-001	Top cover for use on computer models sold at Best Buy
417666-001	Base enclosure for use on computer models sold at Best Buy
417667-001	Plastics Kit for use on computer models sold at Best Buy
417713-001	Display Screw Kit
418238-01	Switch cover for use on computer models with wireless capability sold at Best Buy (includes wireless button and light)
419436-001	Intel Celeron M 410 (1.46-GHz) processor (includes thermal pad)
419437-001	Intel Core Duo T2300E (1.66-GHz) processor (includes thermal pad)
430892-001	940GML system board for use on computer models with Web camera and microphone
430893-001	945GM system board for use on computer models without Web camera and microphone
430894-001	945GM system board for use on computer models with Web camera and microphone
430895-001	945GM system board for use on computer models sold at Best Buy
430896-001	Intel Core Solo T1350 (1.86-GHz) processor (includes thermal pad)

Downloaded from www.Manualslib.com manuals search engine

Table 3-6

Spare Parts: Sequential Part Number Listing *(Continued)*

Spare Part Number	Description
430897-001	Intel Core Duo T2250 (1.73-GHz) processor (includes thermal pad)
430898-001	Intel Core Duo T2250 (1.60-GHz) processor (includes thermal pad)
431091-001	14.0-inch, WXGA display assembly with Web camera (includes wireless antenna transceivers and cables)
431827-001	14.0-inch, WXGA, SVA with BrightView display assembly with Web camera (includes wireless transceivers and cables)

Downloaded from www.Manualslib.com manuals search engine

4

Removal and Replacement Preliminaries

This chapter provides essential information for proper and safe removal and replacement service.y

4.1 Tools Required

You will need the following tools to complete the removal and replacement procedures:

- Magnetic screwdriver
- Phillips P0 and P1 screwdrivers
- Flat-bladed screwdriver

Downloaded from www.Manualslib.com manuals search engine

4.2 Service Considerations

The following sections include some of the considerations that you should keep in mind during disassembly and assembly procedures.

As you remove each subassembly from the computer, place the subassembly (and all accompanying screws) away from the work area to prevent damage.

Plastic Parts

Using excessive force during disassembly and reassembly can damage plastic parts. Use care when handling the plastic parts. Apply pressure only at the points designated in the maintenance instructions.

Cables and Connectors

CAUTION: When servicing the computer, ensure that cables are placed in their proper locations during the reassembly process. Improper cable placement can damage the computer.

Cables must be handled with extreme care to avoid damage. Apply only the tension required to unseat or seat the cables during removal and insertion. Handle cables by the connector whenever possible. In all cases, avoid bending, twisting, or tearing cables. Ensure that cables are routed in such a way that they cannot be caught or snagged by parts being removed or replaced. Handle flex cables with extreme care; these cables tear easily.

Downloaded from www.Manualslib.com manuals search engine

4.3 Preventing Damage to Removable Drives

Removable drives are fragile components that must be handled with care. To prevent damage to the computer, damage to a removable drive, or loss of information, observe the following precautions:

- Before removing or inserting a hard drive, shut down the computer. If you are unsure whether the computer is off or in Hibernation, turn the computer on, and then shut it down through the operating system.
- Before removing a diskette drive or optical drive, ensure that a diskette or disc is not in the drive and ensure that the optical drive tray is closed.
- Before handling a drive, ensure that you are discharged of static electricity. While handling a drive, avoid touching the connector.
- Handle drives on surfaces covered with at least one inch of shock-proof foam.
- Avoid dropping drives from any height onto any surface.
- After removing a hard drive, CD-ROM drive, or a diskette drive, place it in a static-proof bag.
- Avoid exposing a hard drive to products that have magnetic fields, such as monitors or speakers.
- Avoid exposing a drive to temperature extremes or liquids.
- If a drive must be mailed, place the drive in a bubble pack mailer or other suitable form of protective packaging and label the package, “FRAGILE: Handle With Care.”

Downloaded from www.Manualslib.com manuals search engine

4.4 Preventing Electrostatic Damage

Many electronic components are sensitive to electrostatic discharge (ESD). Circuitry design and structure determine the degree of sensitivity. Networks built into many integrated circuits provide some protection, but in many cases, the discharge contains enough power to alter device parameters or melt silicon junctions.

A sudden discharge of static electricity from a finger or other conductor can destroy static-sensitive devices or microcircuitry. Often the spark is neither felt nor heard, but damage occurs.

An electronic device exposed to electrostatic discharge might not be affected at all and can work perfectly throughout a normal cycle. Or the device might function normally for a while, then degrade in the internal layers, reducing its life expectancy.

Downloaded from www.Manualslib.com manuals search engine

4.5 Packaging and Transporting Precautions

Use the following grounding precautions when packaging and transporting equipment:

- To avoid hand contact, transport products in static-safe containers, such as tubes, bags, or boxes.
- Protect all electrostatic-sensitive parts and assemblies with conductive or approved containers or packaging.
- Keep electrostatic-sensitive parts in their containers until the parts arrive at static-free workstations.
- Place items on a grounded surface before removing items from their containers.
- Always be properly grounded when touching a sensitive component or assembly.
- Store reusable electrostatic-sensitive parts from assemblies in protective packaging or nonconductive foam.
- Use transporters and conveyors made of antistatic belts and roller bushings. Ensure that mechanized equipment used for moving materials is wired to ground and that proper materials are selected to avoid static charging. When grounding is not possible, use an ionizer to dissipate electric charges.

Downloaded from www.Manualslib.com manuals search engine

4.6 Workstation Precautions

Use the following grounding precautions at workstations:

- Cover the workstation with approved static-shielding material (refer to Table 4-2, "Static-Shielding Materials").
- Use a wrist strap connected to a properly grounded work surface and use properly grounded tools and equipment.
- Use conductive field service tools, such as cutters, screwdrivers, and vacuums.
- When using fixtures that must directly contact dissipative surfaces, only use fixtures made of static-safe materials.
- Keep the work area free of nonconductive materials, such as ordinary plastic assembly aids and Styrofoam.
- Handle electrostatic-sensitive components, parts, and assemblies by the case or PCM laminate. Handle these items only at static-free workstations.
- Avoid contact with pins, leads, or circuitry.
- Turn off power and input signals before inserting or removing connectors or test equipment.

Downloaded from www.Manualslib.com manuals search engine

4.7 Grounding Equipment and Methods

Grounding equipment must include either a wrist strap or a foot strap at a grounded workstation.

- When seated, wear a wrist strap connected to a grounded system. Wrist straps are flexible straps with a minimum of one megohm ±10% resistance in the ground cords. To provide proper ground, wear a strap snugly against the skin at all times. On grounded mats with banana-plug connectors, use alligator clips to connect a wrist strap.
- When standing, use foot straps and a grounded floor mat. Foot straps (heel, toe, or boot straps) can be used at standing workstations and are compatible with most types of shoes or boots. On conductive floors or dissipative floor mats, use foot straps on both feet with a minimum of one megohm resistance between the operator and ground. To be effective, the conductive strips must be worn in contact with the skin.

Other grounding equipment recommended for use in preventing electrostatic damage includes

- Antistatic tape.
- Antistatic smocks, aprons, and sleeve protectors.
- Conductive bins and other assembly or soldering aids.
- Nonconductive foam.
- Conductive tabletop workstations with ground cords of one megohm resistance.
- Static-dissipative tables or floor mats with hard ties to the ground.
- Field service kits.
- Static awareness labels.
- Material-handling packages.
- Nonconductive plastic bags, tubes, or boxes.
- Metal tote boxes.
- Electrostatic voltage levels and protective materials.

Downloaded from www.Manualslib.com manuals search engine

Table 4-1 shows how humidity affects the electrostatic voltage levels generated by different activities.

Table 4-1

Typical Electrostatic Voltage Levels

	Relative Humidity		
Event	**10%**	**40%**	**55%**
Walking across carpet	35,000 V	15,000 V	7,500 V
Walking across vinyl floor	12,000 V	5,000 V	3,000 V
Motions of bench worker	6,000 V	800 V	400 V
Removing DIPS from plastic tube	2,000 V	700 V	400 V
Removing DIPS from vinyl tray	11,500 V	4,000 V	2,000 V
Removing DIPS from Styrofoam	14,500 V	5,000 V	3,500 V
Removing bubble pack from PCB	26,500 V	20,000 V	7,000 V
Packing PCBs in foam-lined box	21,000 V	11,000 V	5,000 V

✎ A product can be degraded by as little as 700 V.

Table 4-2 lists the shielding protection provided by antistatic bags and floor mats.

Table 4-2

Static-Shielding Materials

Material	Use	Voltage Protection Level
Antistatic plastic	Bags	1,500 V
Carbon-loaded plastic	Floor mats	7,500 V
Metallized laminate	Floor mats	5,000 V

Downloaded from www.Manualslib.com manuals search engine

5

Removal and Replacement Procedures

This chapter provides removal and replacement procedures.

There are as many as 89 screws, in 10 different sizes, that must be removed, replaced, or loosened when servicing the computer. Make special note of each screw size and location during removal and replacement.

Refer to Appendix A, “Screw Listing,” for detailed information on screw sizes, locations, and usage.

Downloaded from www.Manualslib.com manuals search engine

5.1 Serial Number

Report the computer serial number to HP when requesting information or ordering spare parts. The serial number is located on the bottom of the computer.

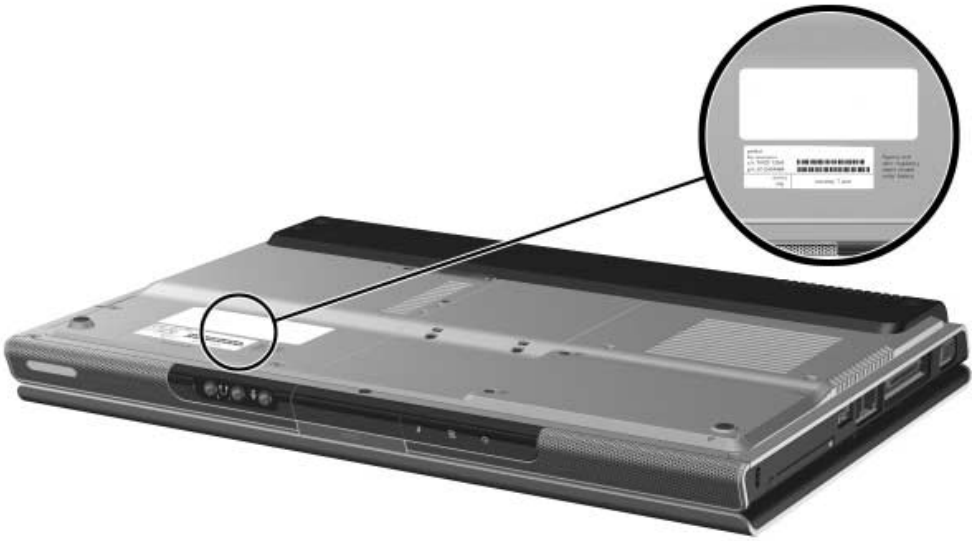

Serial Number Location

Downloaded from www.Manualslib.com manuals search engine

5.2 Disassembly Sequence Chart

Use the chart below to determine the section number to be referenced when removing computer components.

Disassembly Sequence Chart

Section	Description	# of Screws Removed
5.3	Preparing the Computer for Disassembly	
	Battery	0
5.4	Hard Drive	2 loosened to remove the hard drive cover 4 removed to disassemble the hard drive
5.5	Computer Feet	0
5.6	Memory Module	2 loosened to remove the memory module compartment cover
5.7	Mini Card Module	1 loosened to remove the Mini Card module compartment cover 2 removed to remove the Mini Card
	⚠ To prevent an unresponsive system and the display of a warning message, install only a Mini Card device authorized for use in your computer by the governmental agency that regulates wireless devices in your country. If you install a device and then receive a warning message, remove the device to restore computer functionality. Then contact Customer Care.	
5.8	Optical Drive	1 to remove the optical drive 2 to remove the optical drive bracket
5.9	Switch Cover	3
5.10	Keyboard	2

Downloaded from www.Manualslib.com manuals search engine

Disassembly Sequence Chart *(Continued)*

Section	Description	# of Screws Removed
5.11	Display Assembly	4
	Display bezel	6
	Web camera	0
	Display release hooks	4
	Display inverter	1
	Display panel	6
	Display hinges	4
	Wireless antenna transceivers	4
5.12	Base Enclosure	20
5.13	USB/S-Video Board	2
5.14	Bluetooth Module	2
5.15	Speaker Assembly	0
5.16	RTC Battery	0
5.17	Menu Control Button Board	4
5.18	Fan/Heat Sink Assembly	4
5.19	Processor	1 loosened
5.20	System Board	3
5.21	LED Board	3
5.22	ExpressCard Assembly	2

5.3 Preparing the Computer for Disassembly

Before you begin any removal or installation procedures:

1. Shut down the computer. If you are unsure whether the computer is off or in Hibernation, turn the computer on, and then shut it down through the operating system.

Downloaded from www.Manualslib.com manuals search engine

2. Disconnect all external devices connected to the computer.
3. Disconnect the power cord.

Battery Spare Part Number Information	
12-cell, 8.8-AHr	396600-001
6-cell, 4.0-AHr	396601-001

4. Remove the battery by following these steps:
   a. Turn the computer upside down with the front panel toward you.
   b. Slide and hold the battery release latch ❶ to the left. (The front edge of the battery disengages from the computer.)
   c. Lift the front edge of the battery ❷ up and swing it back.
   d. Remove the battery.

Removing the Battery

Reverse the above procedure to install the battery.

Downloaded from www.Manualslib.com manuals search engine

5.4 Hard Drive

Hard Drive Spare Part Number Information	
Frame and connector included.	
5400-rpm, 100-GB	412367-001
5400-rpm, 80-GB	412366-001
5400-rpm, 60-GB	412365-001
5400-rpm, 40-GB	412364-001

1. Prepare the computer for disassembly (refer to Section 5.3).

Downloaded from www.Manualslib.com manuals search engine

2. Loosen the two black Phillips PM2.5×5.0 screws ❶ that secure the hard drive cover to the computer.
3. Lift the left side of the cover ❷ and swing it to the right.
4. Remove the hard drive cover.

The hard drive cover is included in the Plastics Kits, spare part number 412384-001 for computer models not sold at Best Buy, and spare part number 417666-001 for computer models sold at Best Buy.

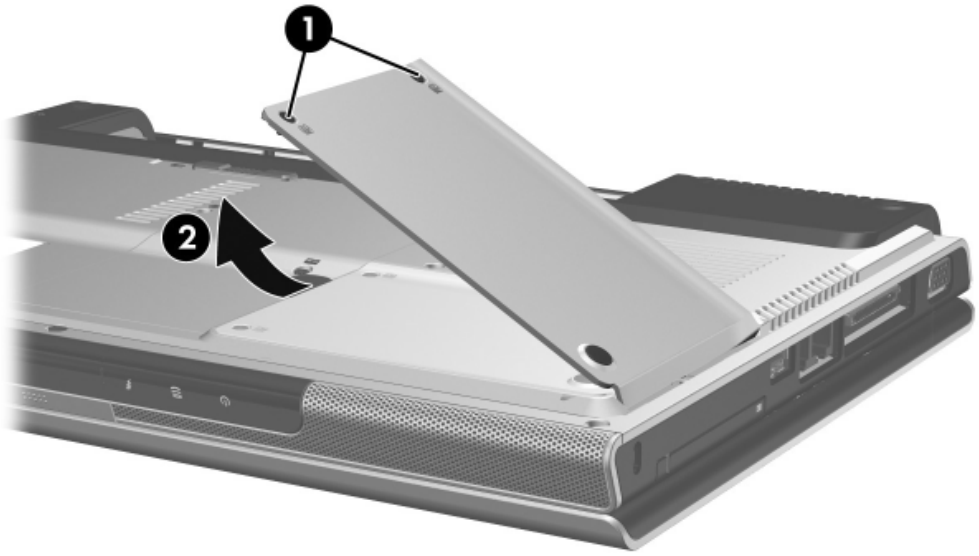

Removing the Hard Drive Cover

Downloaded from www.Manualslib.com manuals search engine

5. Use the mylar tab ❶ to lift the hard drive ❷ until it disconnects from the computer.
6. Remove the hard drive from the hard drive bay.

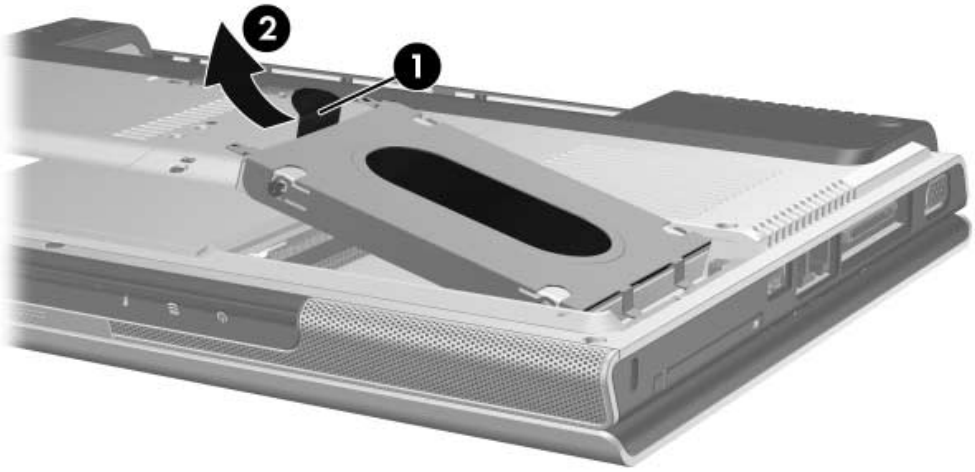

Removing the Hard Drive

Downloaded from www.Manualslib.com manuals search engine

7. Remove the four Phillips PM2.5×4.0 screws ❶ that secure the hard drive frame to the hard drive.
8. Lift the frame ❷ straight up to remove if from the hard drive.
9. Slide the hard drive connector ❸ off the hard drive.

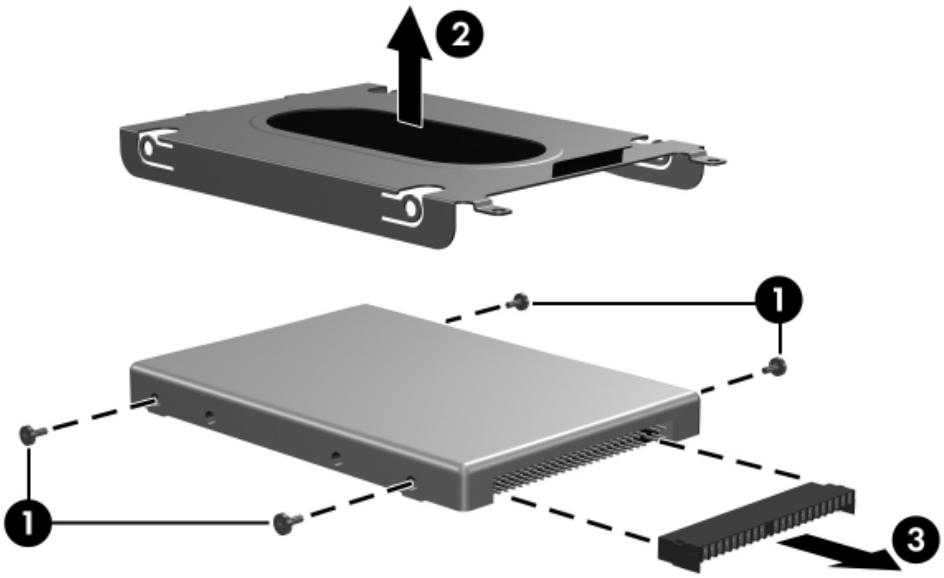

Removing the Hard Drive Frame and Connector

Reverse the above procedure to install and reassemble the hard drive.

Downloaded from www.Manualslib.com manuals search engine

5.5 Computer Feet

The computer feet are adhesive-backed rubber pads. The feet are included in the Rubber Feet Kit, spare part number 412579-001. The feet attach to the base enclosure as illustrated below.

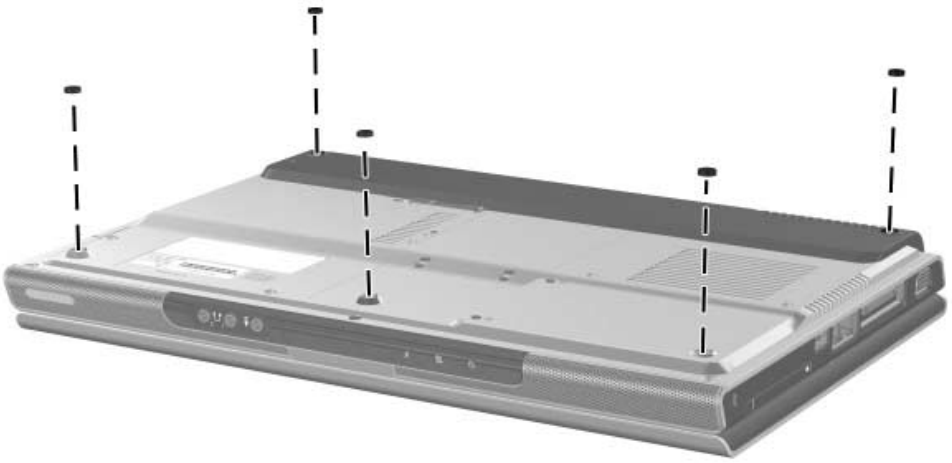

Replacing the Computer Feet

Downloaded from www.Manualslib.com manuals search engine

5.6 Memory Module

Memory Module Spare Part Number Information	
PC2-5300, 667-MHz	
1024 MB	412363-001
512 MB	412362-001
256 MB	412361-001
PC2-4200, 533-MHz	
1024 MB	412360-001
512 MB	412359-001
256 MB	412358-001

1. Prepare the computer for disassembly (refer to Section 5.3).

Downloaded from www.Manualslib.com manuals search engine

2. Loosen the two black Phillips PM2.5×5.0 screws ❶ that secure the memory module compartment cover to the computer.
3. Lift the front edge of the memory module compartment cover ❷ up and swing it back.
4. Remove the memory module compartment cover.

The memory module compartment cover is included in the Plastics Kit, spare part number 412384-001 for computer models not sold at Best Buy, and spare part number 417666-001 for computer models sold at Best Buy.

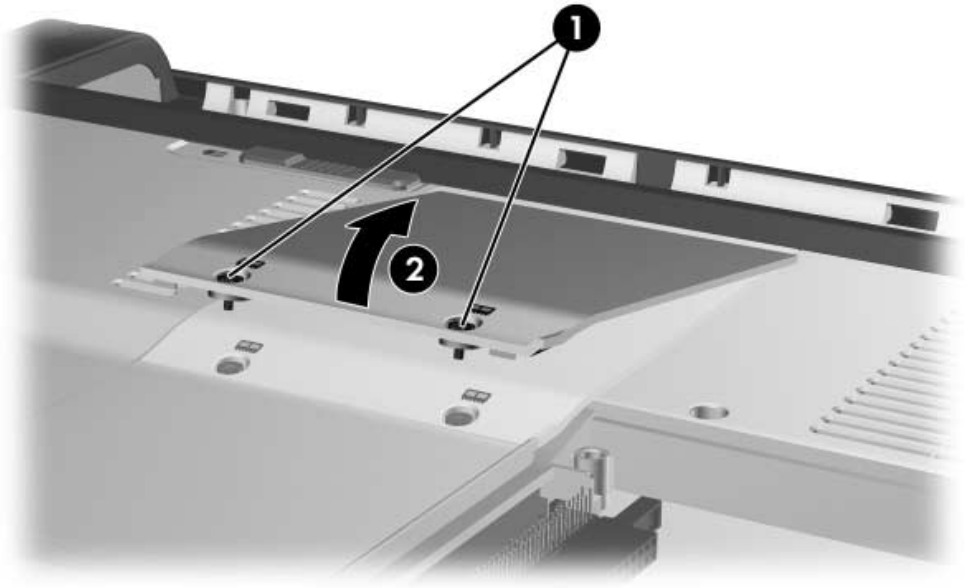

Removing the Memory Module Compartment Cover

Downloaded from www.Manualslib.com manuals search engine

5. Spread the retaining tabs ❶ on each side of the memory module socket to release the memory module. (The edge of the module opposite the socket rises away from the computer.)
6. Slide the module ❷ away from the socket at an angle.

Memory modules are designed with a notch ❸ to prevent incorrect installation into the memory module socket.

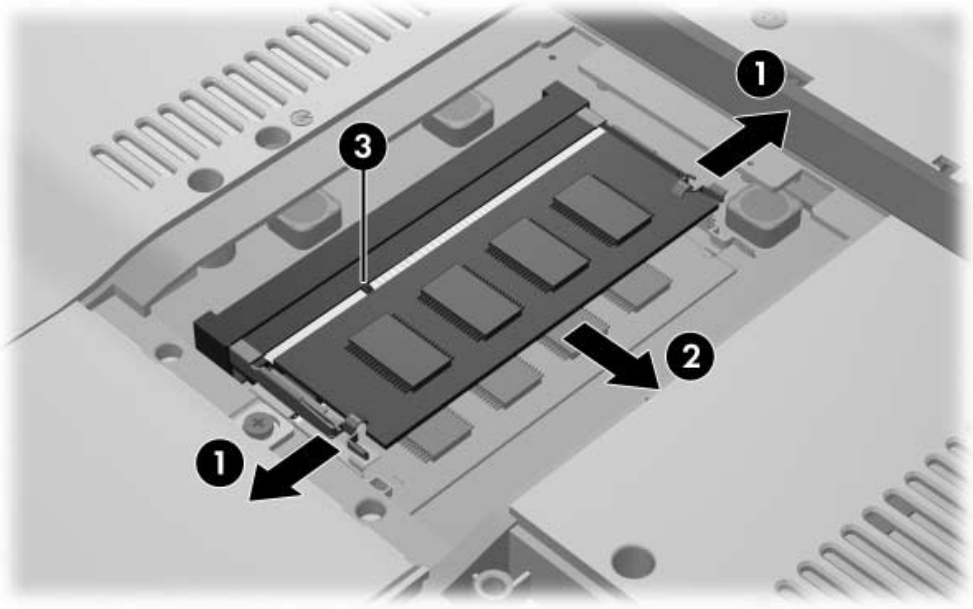

Removing the Memory Module

Reverse the above procedure to install a memory module.

Downloaded from www.Manualslib.com manuals search engine

5.7 Mini Card Module

Mini Card Module Spare Part Number Information			
802.11a/b/g WLAN module for use in the MOW 1 countries listed below.			407674-001
Antigua & Barbuda	Canada	Hong Kong	New Zealand
Argentina	Chile	Panama	Paraguay
Australia	Dominican Republic	India	Saudi Arabia
Bahamas	Guam	Indonesia	Taiwan
Barbados	Guatemala	Malaysia	The United States
Brunei		Mexico	Vietnam
802.11a/b/g WLAN module for use in the MOW 2 countries listed below.			407674-002
Aruba	Egypt	The Phillippines	The Netherlands
Austria	El Salvador	Poland	Norway
Azerbaijan	Estonia	Portugal	Oman
Bahrain	Finand	Romania	Slovenia
Belgium	France	Russia	South Africa
Bermuda	Georgia	Serbia and Montenegro	Spain
Bulgaria	Germany	Singapore	Sri Lanka
Cayman Islands	Greece	Slovakia	Sweden
Columbia	Hungary	Liechtenstein	Switzerland
Croatia	Iceland	Lithuania	Turkey
Cyprus	Ireland	Luxembourg	The United Kingdom
The Czech Republic	Italy	Malta	Uzbekistan
Denmark	Latvia	Monaco	
	Lebanon		

Downloaded from www.Manualslib.com manuals search engine

Mini Card Module Spare Part Number Information *(Continued)*			
802.11a/b/g WLAN module for use in the ROW countries listed below.			407674-003
China Ecuador Haiti	Honduras Pakistan Peru	Qatar South Korea	Uruguay Venezuela
802.11a/b/g WLAN module for use in Japan			407674-291
802.11b/g WLAN module HS MOW			407159-001
802.11b/g WLAN module HS ROW			407159-002
802.11b/g WLAN module GL			407674-004

1. Prepare the computer for disassembly (Section 5.3).

Downloaded from www.Manualslib.com manuals search engine

2. Loosen the black Phillips PM2.5×5.0 screw ❶ that secures the Mini Card compartment cover to the computer.
3. Lift the rear edge of the Mini Card compartment cover ❷ up, and then swing it forward.
4. Remove the Mini Card compartment cover.

The Mini Card compartment cover is included in the Plastics Kit, spare part number 412384-001 for computer models not sold at Best Buy, and spare part number 417666-001 for computer models sold at Best Buy.

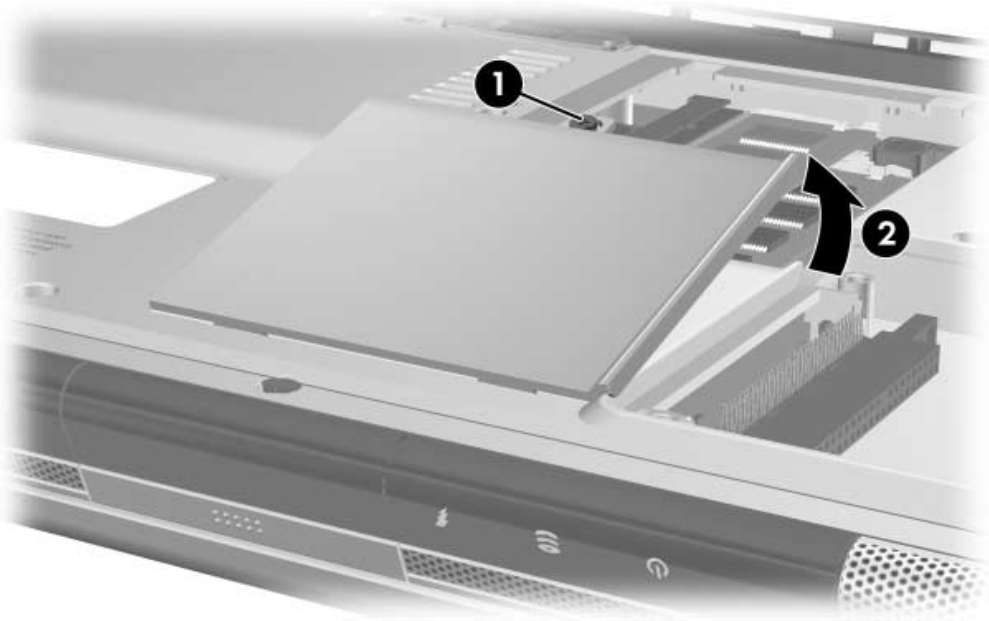

Removing the Mini Card Compartment Cover

Downloaded from www.Manualslib.com manuals search engine

5. Make note of which wireless antenna cable is attached to which antenna clip on the Mini Card module before disconnecting the cables, then disconnect the cables ❶ from the module.
6. Remove the two Phillips PM2.5×6.0 screws ❷ that secure the Mini Card module to the computer. (The edge of the module opposite the socket rises away from the computer).
7. Remove the module ❸ by pulling it away from the socket at an angle.

Mini Card modules are designed with a notch ❹ to prevent incorrect installation into the Mini Card module socket.

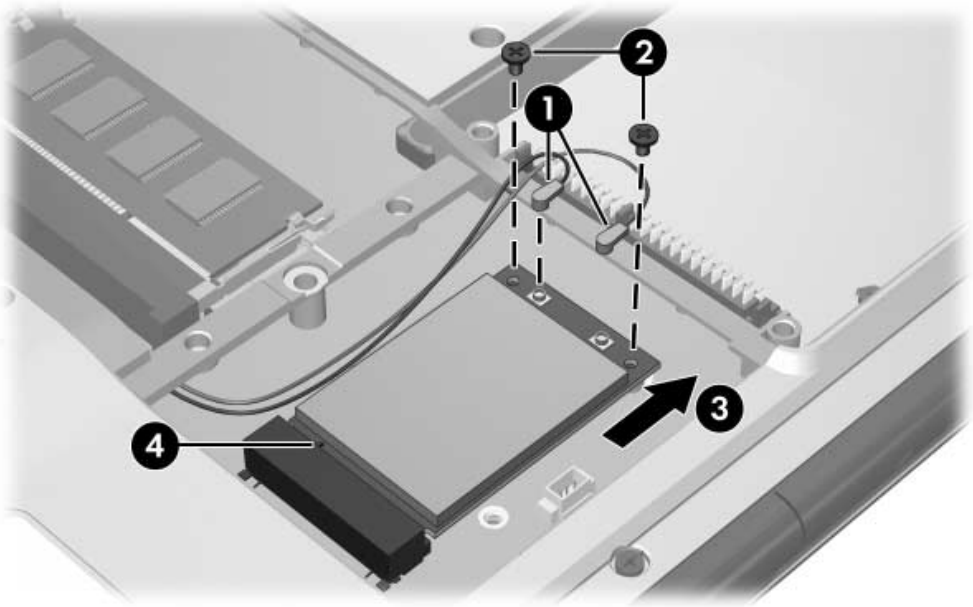

Removing a Mini Card Module

Reverse the above procedure to install a Mini Card module.

Downloaded from www.Manualslib.com manuals search engine

5.8 Optical Drive

Optical Drive Spare Part Number Information	
24X DVD/CD-RW Combo Drive	412368-001
8X DVD±RW/R and CD-RW Double-Layer Combo Drive	419438-001
8X DVD±RW/R and CD-RW Double-Layer Combo Drive with LightScribe for use on computer models sold at Best Buy	419440-001
8X DVD±RW/R and CD-RW Double-Layer Combo Drive with LightScribe	419439-001
8X DVD±RW/R and CD-RW Double-Layer Combo Drive with LightScribe and “HLDS”	412373-001

1. Prepare the computer for disassembly (Section 5.3).

Downloaded from www.Manualslib.com manuals search engine

2. Remove the Phillips PM2.5×8.5 screw ❶ that secures the optical drive to the computer.
3. Insert a thin tool, such as a paper clip, into the media tray release hole ❷. (The optical drive media tray releases from the optical drive.)
4. Use the media tray frame to slide the optical drive ❸ to the left.
5. Remove the optical drive.

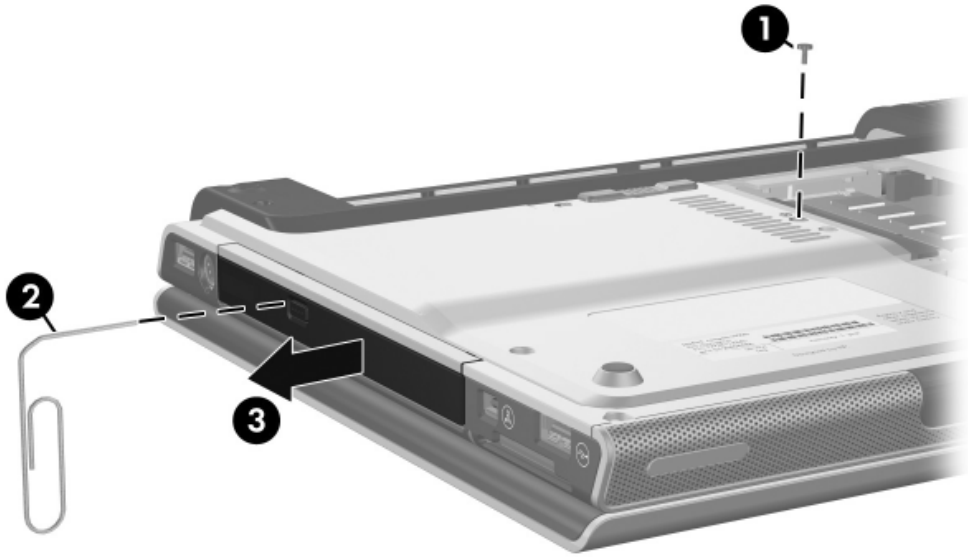

Removing the Optical Drive

Downloaded from www.Manualslib.com manuals search engine

6. Position the optical drive with the optical drive bracket toward you.
7. Remove the two Phillips Phillips PM2.0×3.0 screws ❶ that secure the optical drive bracket to the optical drive.
8. Remove the optical drive ❷.

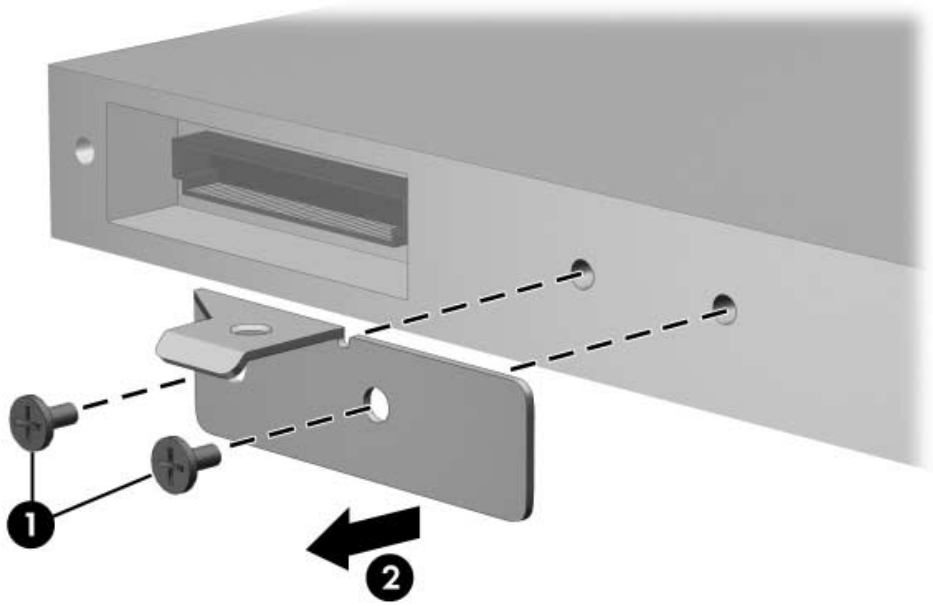

Removing the Optical Drive Bracket

Reverse the above procedure to reassemble and install the optical drive.

Downloaded from www.Manualslib.com manuals search engine

5.9 Switch Cover

Switch Cover Spare Part Number Information	
For use on computer models with wireless capability	412391-001
For use on computer models without wireless capability	412393-001
For use on computer models with wireless capability sold at Best Buy	418238-001

1. Prepare the computer for disassembly (Section 5.3).
2. Position the computer with the rear panel toward you.
3. Remove the three silver Phillips PM2.5×5.0 screws that secure the switch cover to the computer.

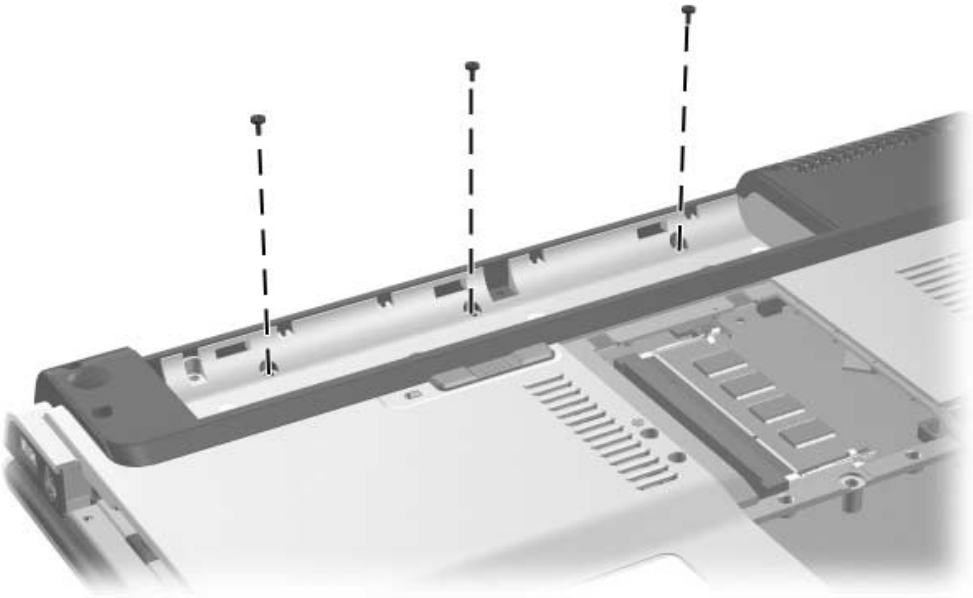

Removing the Switch Cover Screws

Downloaded from www.Manualslib.com manuals search engine

4. Turn the computer display side up with the front toward you.
5. Open the computer as far as possible.
6. Insert a flat-bladed screwdriver under the outside edges of the display hinge covers.
7. Lift up on the outside edges of the hinge covers ❶ until the switch cover ❷ disengages from the computer.

Releasing the Switch Cover

Downloaded from www.Manualslib.com manuals search engine

8. Swing the rear edge of the switch cover forward.
9. Remove the switch cover.

Removing the Switch Cover

Reverse the above procedure to install the switch cover.

Downloaded from www.Manualslib.com manuals search engine

5.10 Keyboard

Keyboard Spare Part Number Information

Belgium	412374-A41	Norway	412374-091
Brazil	412374-201	Portugal	412374-131
Denmark	412374-081	Saudi Arabia	412374-171
France	412374-051	Spain	412374-071
French Canada	412374-121	Switzerland	412374-111
Germany	412374-041	Taiwan	412374-AB1
Greece	412374-DJ1	Thailand	412374-281
Israel	412374-BB1	The United Kingdom	412374-031
International	412374-B31	Asia Pacific, Australia, Canada, Hong Kong, the People's Republic of China, and the United States	412374-001
Italy	412374-AD1		
Japan	412374-291		
Korea	412374-AD1		
Latin America	412374-161		

1. Prepare the computer for disassembly (Section 5.3).
2. Remove the optical drive (Section 5.8).
3. Remove the switch cover (Section 5.9).
4. Close the computer.
5. Turn the computer upside down with the front toward you.

Downloaded from www.Manualslib.com manuals search engine

6. Remove the two silver Phillips PM2.5×5.0 screws that secure the keyboard to the computer.

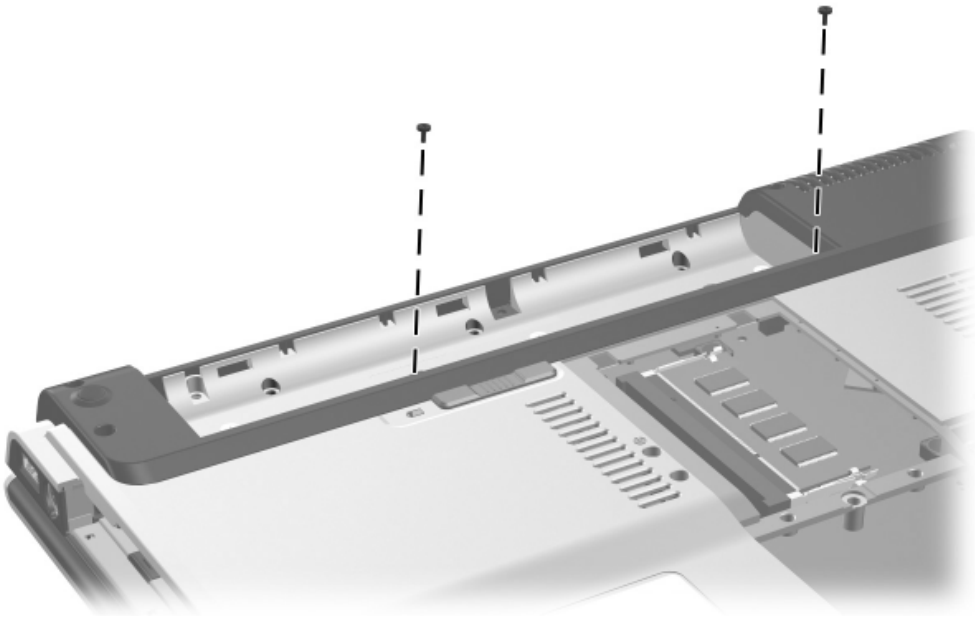

Removing the Keyboard Screws

Downloaded from www.Manualslib.com manuals search engine

7. Turn the computer display side up with the front panel toward you.
8. Open the computer as far as possible.
9. Lift the rear edge of the keyboard and swing it forward until it rests on the palm rest.

Releasing the Keyboard

Downloaded from www.Manualslib.com manuals search engine

10. Release the zero insertion force (ZIF) connector ❶ to which the keyboard cable is connected and disconnect the keyboard cable ❷ from the system board.

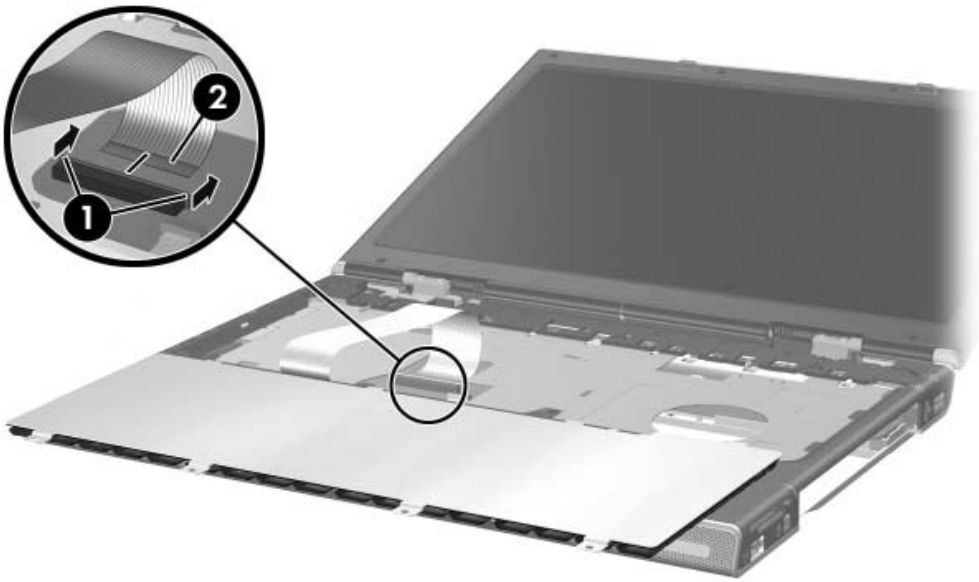

Disconnecting the Keyboard Cable

11. Remove the keyboard.

Reverse the above procedure to install the keyboard.

Downloaded from www.Manualslib.com manuals search engine

5.11 Display Assembly

Display Assembly Spare Part Number Information	
With Web camera	
14.0-inch, WXGA, SVA with BrightView	431091-001
14.0-inch, WXGA	431827-001
Without Web camera	
14.0-inch, WXGA, SVA with BrightView	412338-001
14.0-inch, WXGA	412336-001

1. Prepare the computer for disassembly (Section 5.3).
2. Remove the memory module compartment (Section 5.6) and Mini Card compartment covers (Section 5.7).

Downloaded from www.Manualslib.com manuals search engine

3. Disconnect the wireless antenna cables ❶ from the Mini Card module.
4. Disconnect the microphone cable ❷ from the system board.

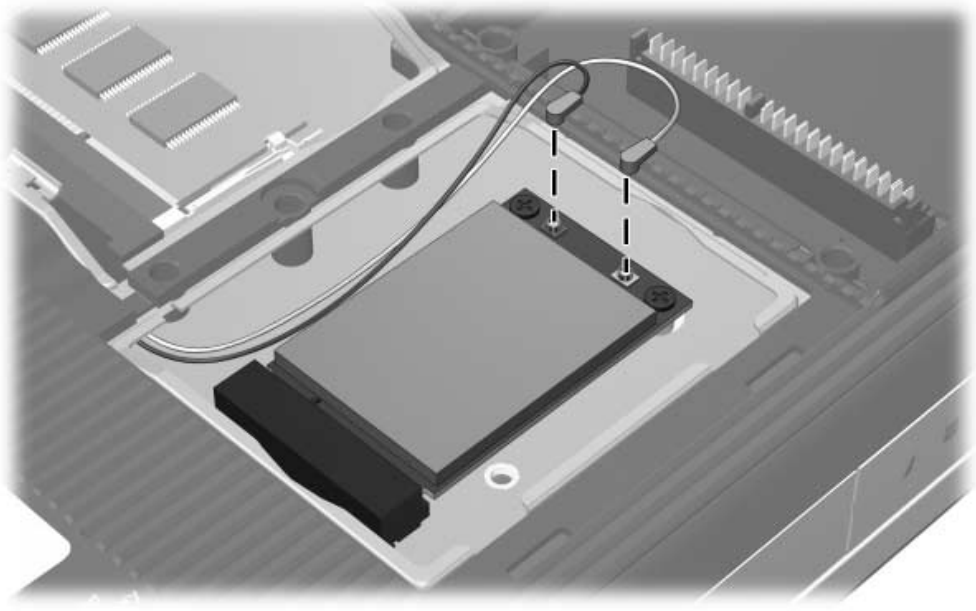

Disconnecting the Wireless Antenna Cables and Microphone Cables

Downloaded from www.Manualslib.com manuals search engine

5. Remove the switch cover (Section 5.9).
6. Remove the keyboard (Section 5.10).
7. Turn the computer display side up with the front toward you.
8. Open the display as far as possible.
9. Disconnect the display ❶ and Web camera cables ❷ from the system board.
10. Remove the cables ❸ from the clips ❹ and ❺ in the top cover.

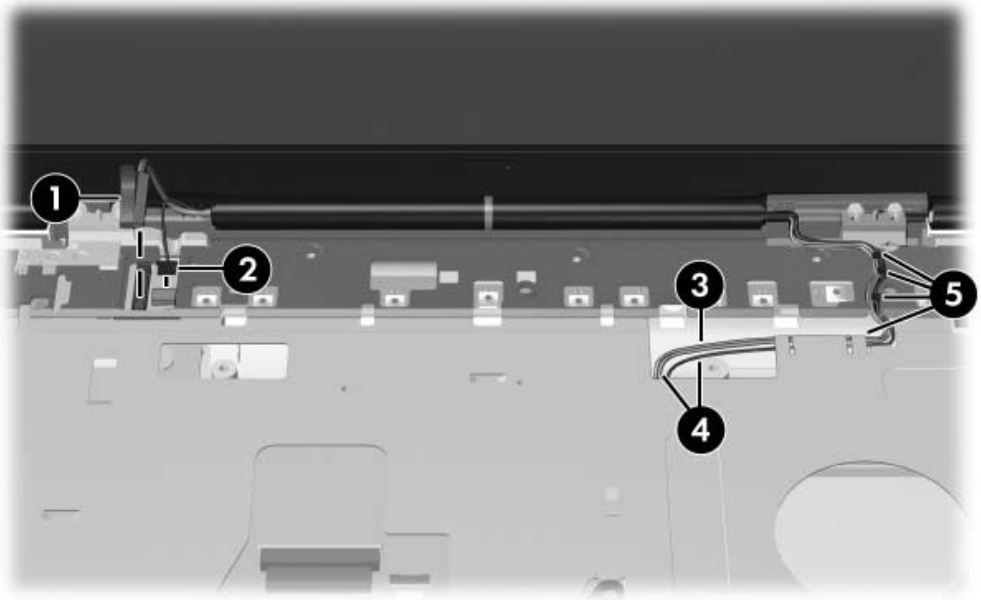

Disconnecting the Display and Web Camera Cables and Removing the Wireless Antenna Cables

Downloaded from www.Manualslib.com manuals search engine

CAUTION: Support the display assembly when removing the following screws. Failure to support the display assembly can result in damage to the display assembly and other computer components.

11. Remove the four Phillips PM2.5×7.0 screws ❶ that secure the display assembly to the computer.
12. Remove the display assembly ❷.

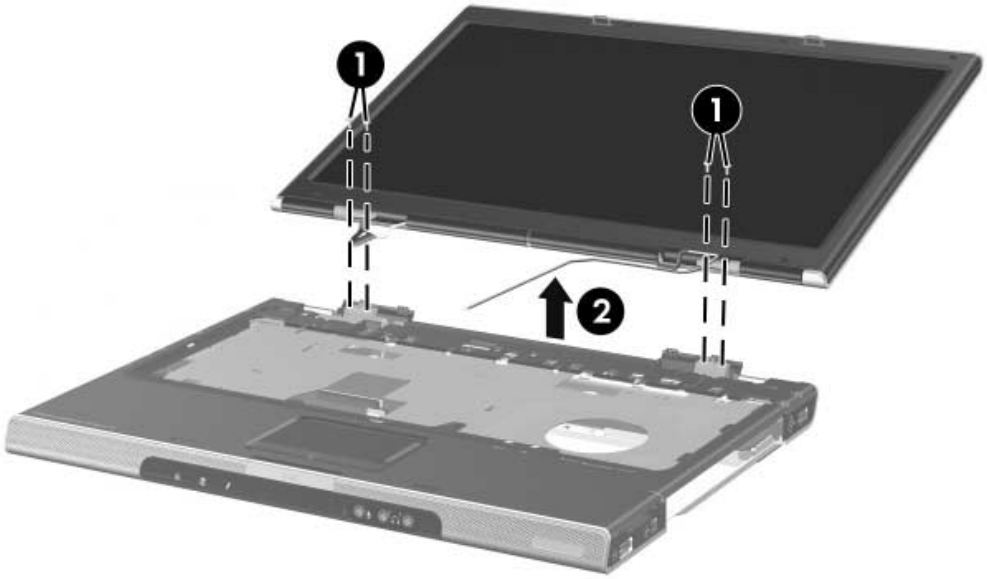

Removing the Display Assembly

Downloaded from www.Manualslib.com manuals search engine

13. Remove the six rubber screw covers ❶ and the six Phillips PM2.5×6.0 screws ❷ that secure the display bezel to the display assembly.

The display bezel rubber screw covers are included in the Rubber Feet Kit, spare part number 412579-001.

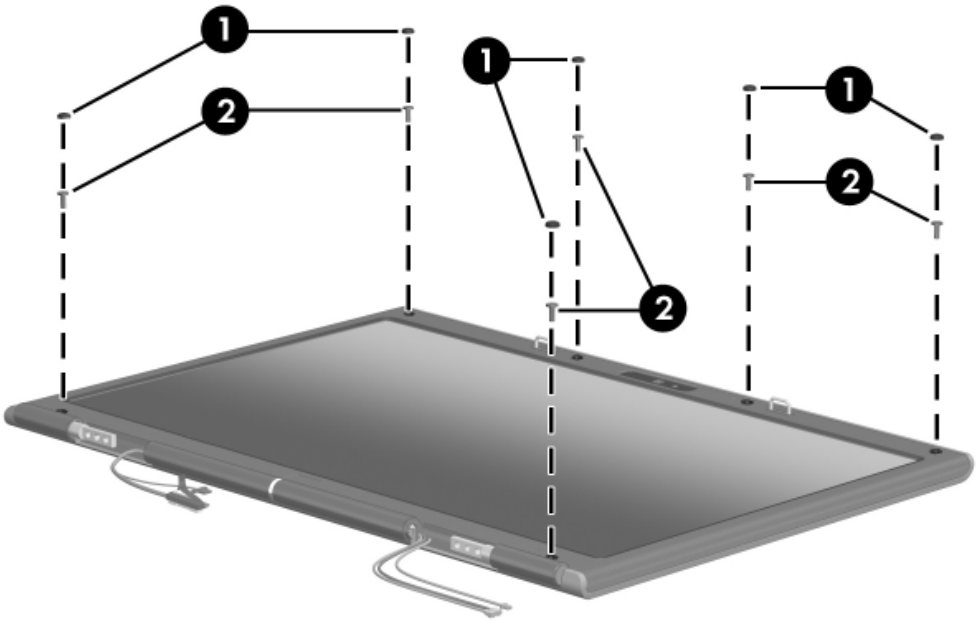

Removing the Display Bezel Screws

Downloaded from www.Manualslib.com manuals search engine

Display Assembly Subcomponents Spare Part Number Information	
Display bezels	
For use on computer models with Web camera and microphone	412343-001
For use on computer models without Web camera and microphone	412342-001
Display enclosures (include wireless antenna transceivers and cables and microphone and cable)	
For use on computer models with Web camera and microphone	412350-001
For use on computer models without Web camera and microphone	412349-001

14. Flex the insides edges of the left and right sides ❶ and the top and bottom sides ❷ of the display bezel until the bezel disengages from the display enclosure.
15. Remove the display bezel ❸.

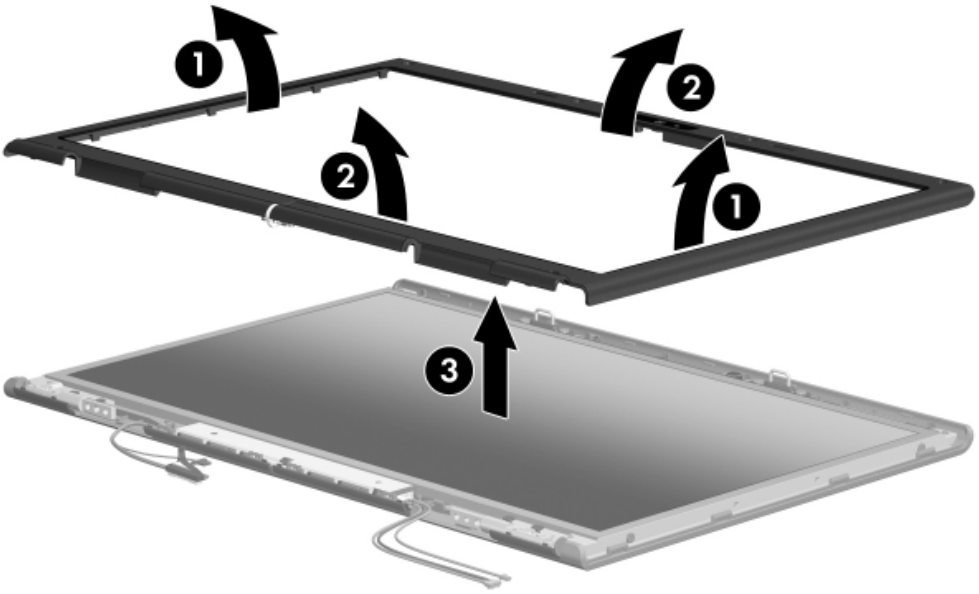

Removing the Display Bezel

Downloaded from www.Manualslib.com manuals search engine

Display Assembly Subcomponents	
Spare Part Number Information	
Web camera board	412347-001
USB camera cable (not illustrated)	412348-001

16. If it is necessary to replace the display Web camera, disconnect the camera cable ❶ from the camera board, and then remove the camera board ❷ from the display enclosure.

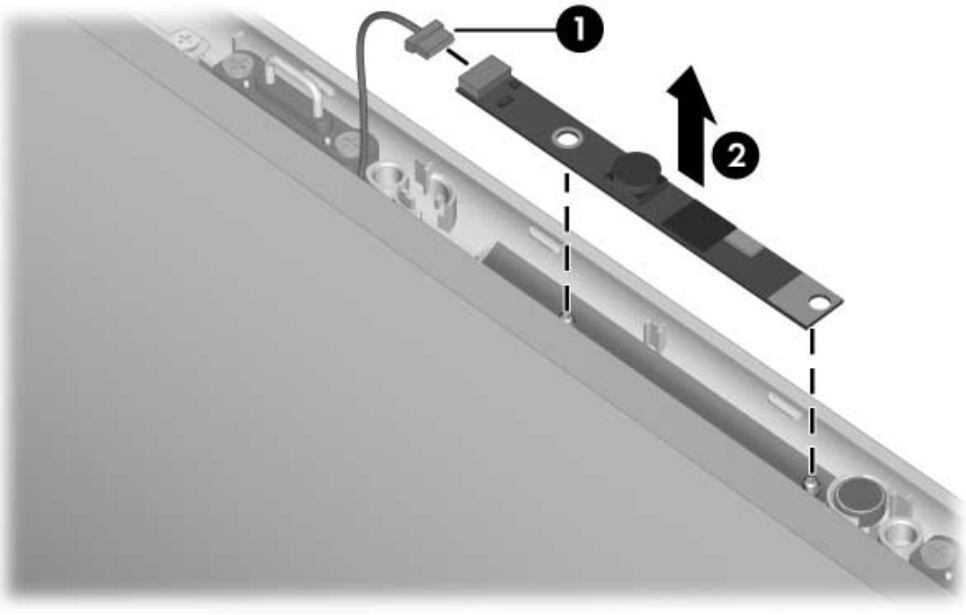

Removing the Display Web Camera

Downloaded from www.Manualslib.com manuals search engine

The display release hooks are available in the Display Hinge Kit, spare part number 412355-001.

17. If it is necessary to replace the display release hooks, remove the two Phillips PM2.5×6.0 screws ❶ that secure each hook to the display enclosure.
18. Remove the display release hooks ❷.

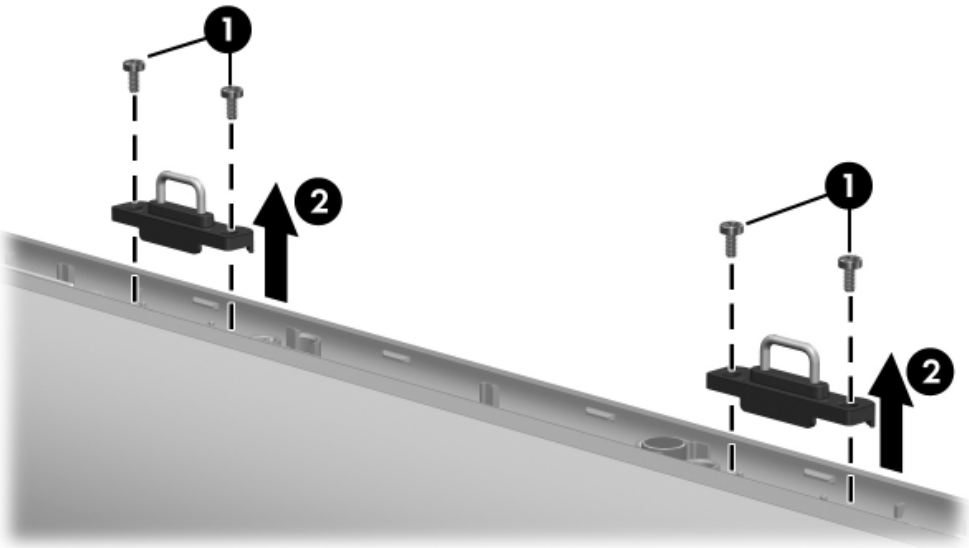

Removing the Display Release Hooks

Downloaded from www.Manualslib.com manuals search engine

Display Assembly Subcomponents	
Spare Part Number Information	
Display inverter	412345-001

19. Remove the Phillips PM2.0×3.0 screw ❶ that secures the display inverter to the display enclosure.
20. Lift the inverter ❷ out of the enclosure as far as the display cable and backlight cables will allow.
21. Disconnect the display ❸ and backlight cables ❹ from the inverter.
22. Remove the inverter.

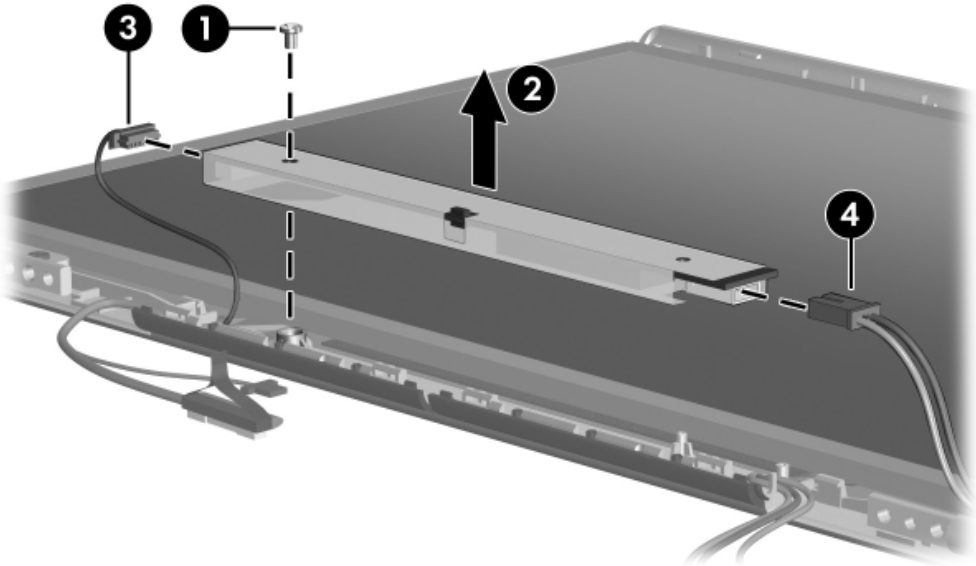

Removing the Display Inverter

Downloaded from www.Manualslib.com manuals search engine

Display Assembly Subcomponents	
Spare Part Number Information	
Display panels	
14.0-inch, WXGA, SVA with BrightView	412341-001
14.0-inch, WXGA	412340-001
14.0-inch, WXGA, SVA with BrightView for use on computer models sold at Best Buy	414032-001

23. Remove the two Phillips PM2.5×5.0 screws ❶ and the four Phillips PM2.5×6.0 screws ❷ that secure the display panel to the display enclosure.
24. Remove the display panel ❸ from the display enclosure.

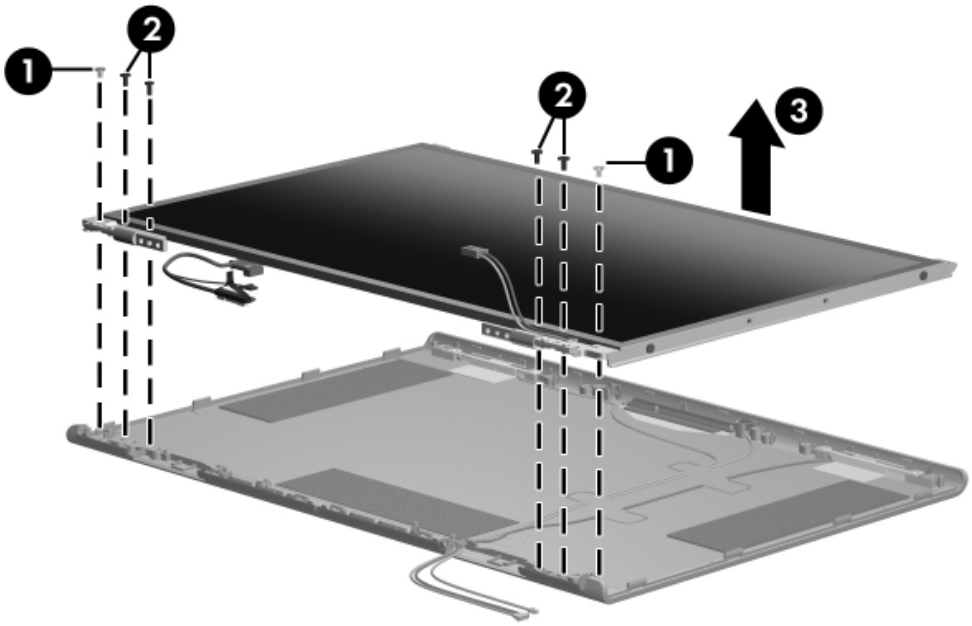

Removing the Display Panel

Downloaded from www.Manualslib.com manuals search engine

Display Assembly Subcomponents	
Spare Part Number Information	
Display Hinge Kit	412355-001

25. If it is necessary to replace the display hinges, remove the two Phillips PM2.0×3.0 screws ❶ that secure each hinge to the display panel.
26. Remove the display hinges ❷.

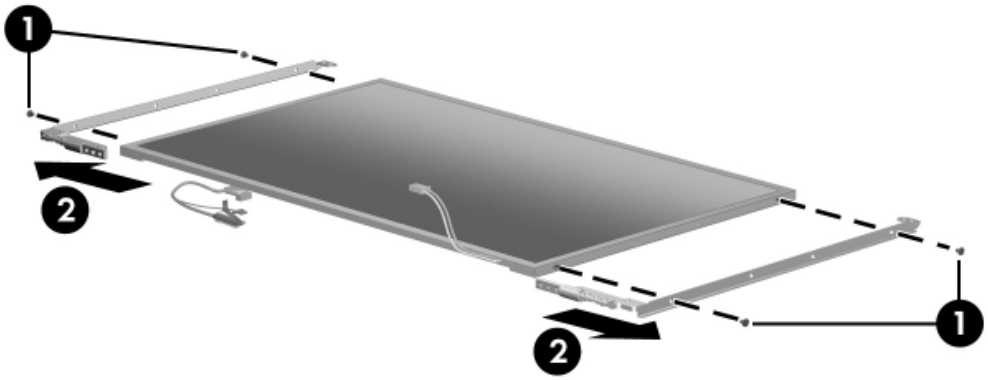

Removing the Display Hinges

Downloaded from www.Manualslib.com manuals search engine

The wireless antenna transceivers and cables are included in tthe display enclosure spare part kits, spare part numbers 412350-001 and 412349-001.

27. If it is necessary to replace the wireless transceivers and cables, remove the two Phillips PM2.0×3.0 screws ❶ that secure the left and right transceivers to the display enclosure.
28. Release the retention tabs ❷ built in to the display enclosure lining that secure the wireless antenna cables to the display enclosure.
29. Detach the wireless antenna transceivers ❸ from the display enclosure.
30. Remove the wireless antenna transceivers and cables ❹.

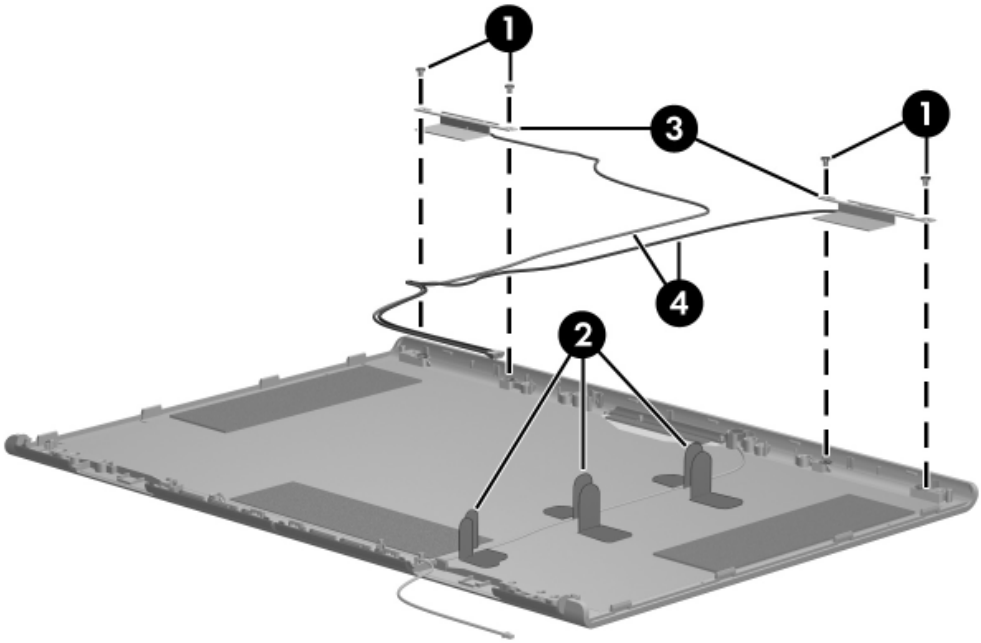

Removing the Wireless Antenna Transceivers and Cables

Downloaded from www.Manualslib.com manuals search engine

The microphone and cable are included in tthe display enclosure spare part kits, spare part numbers 412350-001 and 412349-001.

31. If it is necessary to replace the microphone and cable, release the retention tabs ❶ built in to the display enclosure lining that secure the wireless antenna cables to the display enclosure.
32. Remove the microphone from the clip ❷ in the display enclosure.
33. Detach the microphone cable ❸ from the display enclosure.

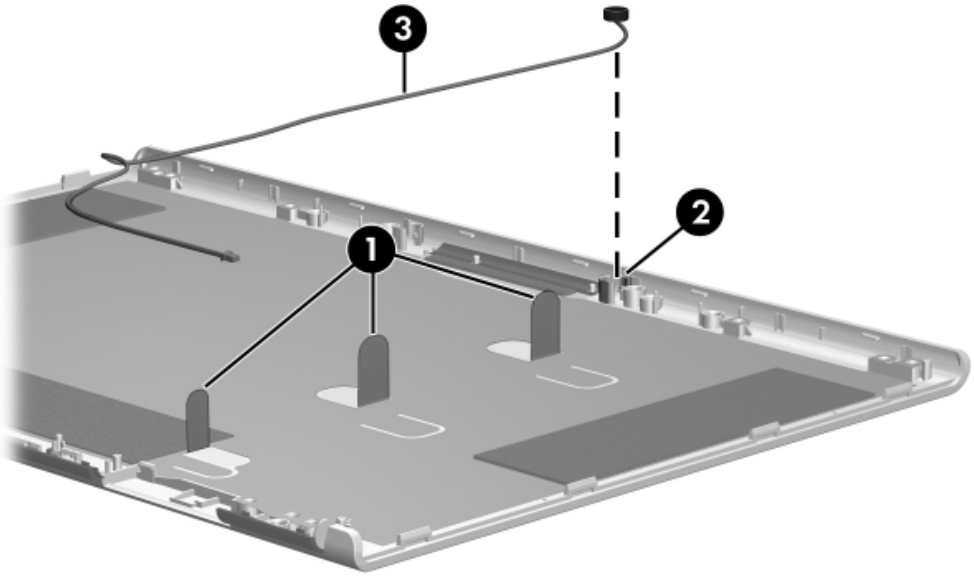

Removing the Microphone

Reverse the above procedure to reassemble and install the display assembly

Downloaded from www.Manualslib.com manuals search engine

5.12 Base Enclosure

Base Enclosure Spare Part Number Information	
For use on computer models with Web camera and microphone	412382-001
For use on computer models without Web camera and microphone	412381-001
For use on computer models sold at Best Buy	417666-001
Rubber Feet Kit (includes computer feet)	412579-001

1. Prepare the computer for disassembly (Section 5.3) and remove the following components:
   - ❏ Hard drive (Section 5.4)
   - ❏ Optical drive (Section 5.8)
   - ❏ Switch cover (Section 5.9)
   - ❏ Keyboard (Section 5.10)
   - ❏ Display assembly (Section 5.11)

Downloaded from www.Manualslib.com manuals search engine

2. Remove the two Phillips PM2.5×8.5 screws that secure the base enclosure to the computer

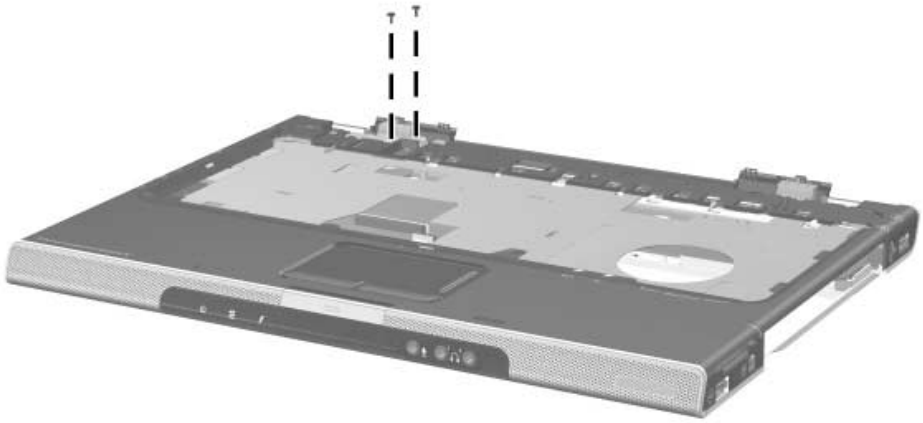

Removing the Base Enclosure Screws, Part 1

Downloaded from www.Manualslib.com manuals search engine

3. Turn the computer upside down with the front toward you.
4. Remove the fourteen Phillips PM2.5×8.5 screws that secure the base enclosure to the computer.

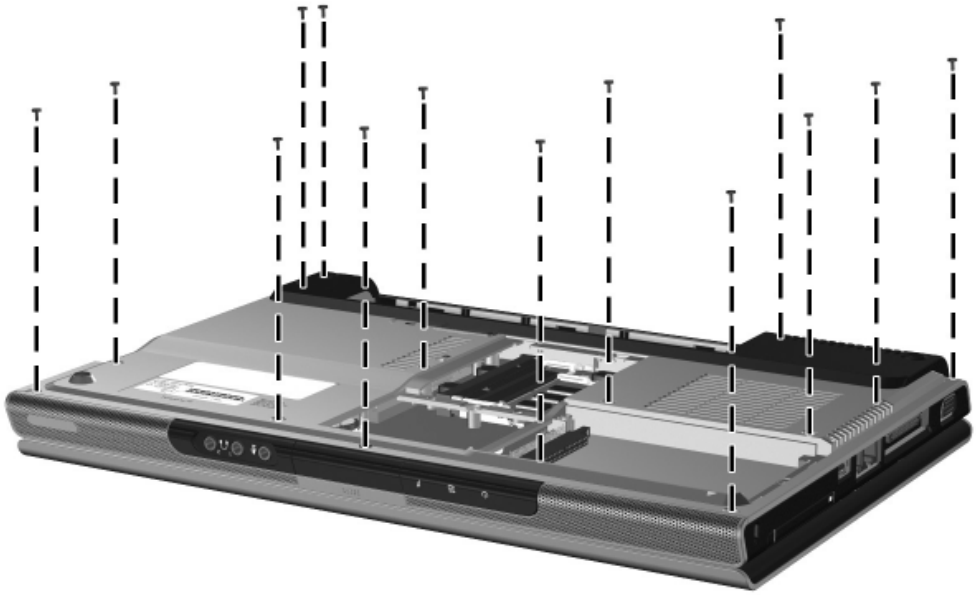

Removing the Base Enclosure Screws, Part 2

Downloaded from www.Manualslib.com manuals search engine

5. Remove the four silver Phillips PM2.5×5.0 screws that secure the base enclosure to the computer.

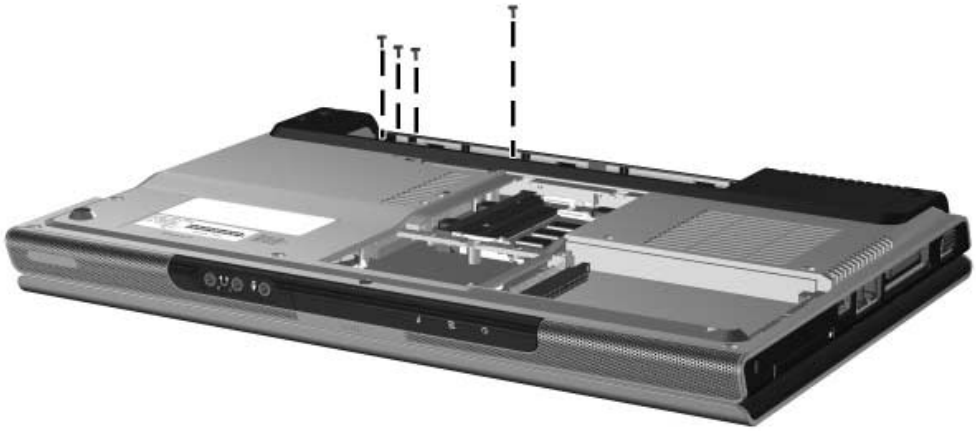

Removing the Base Enclosure Screws, Part 3

Downloaded from www.Manualslib.com manuals search engine

6. Swing the rear edge ❶ of the base enclosure straight up and forward until it rests at an angle.
7. Slide the base enclosure ❷ back at an angle.
8. Remove the base enclosure.

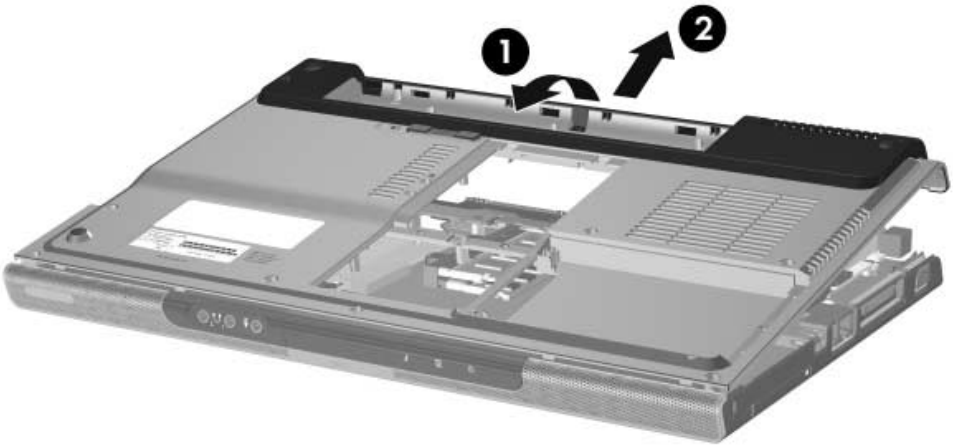

Removing the Base Enclosure

Reverse the above procedure to install the base enclosure.

Downloaded from www.Manualslib.com manuals search engine

5.13 USB/S-Video Board

USB/S-Video Board	
Spare Part Number Information	
USB/S-Video Board	412398-001

1. Prepare the computer for disassembly (Section 5.3) and remove the following components:
   - ❏ Optical drive (Section 5.8)
   - ❏ Switch cover (Section 5.9)
   - ❏ Keyboard (Section 5.10)
   - ❏ Display assembly (Section 5.11)
   - ❏ Base enclosure (Section 5.12)

Downloaded from www.Manualslib.com manuals search engine

2. Remove the two silver Phillips PM2.5×5.0 screws ❶ that secure the USB/S-Video board to the top cover.
3. Lift up on the right side of the board ❷ to disconnect it from the system board.
4. Remove the USB/S-Video board.

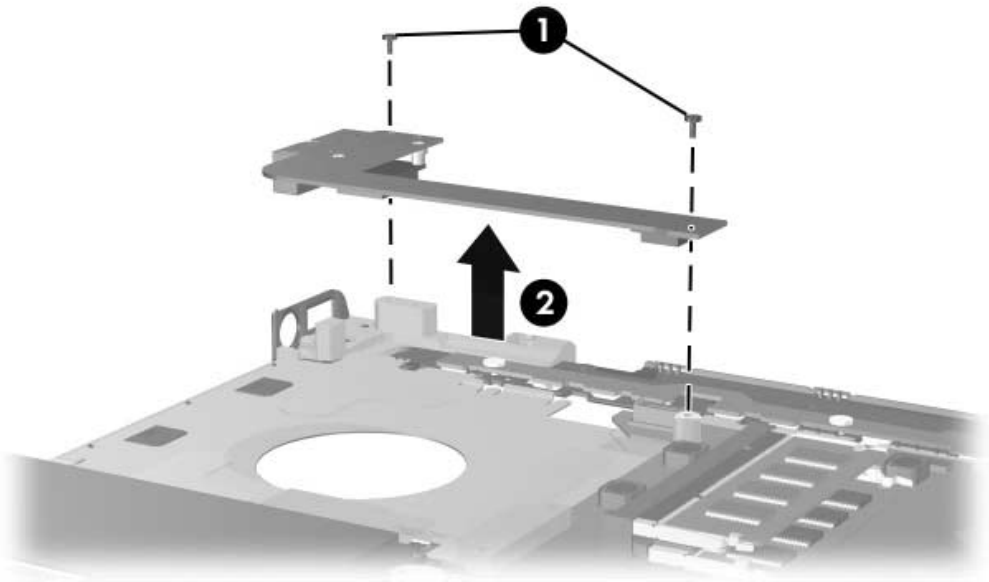

Removing the USB/S-Video Board

Reverse the above procedure to install the USB/S-Video board.

Downloaded from www.Manualslib.com manuals search engine

5.14 Bluetooth Module

Bluetooth Module Spare Part Number Information	
Bluetooth module (includes Bluetooth module cable)	412766-001

1. Prepare the computer for disassembly (Section 5.3) and remove the following components:
   - ❏ Optical drive (Section 5.8)
   - ❏ Switch cover (Section 5.9)
   - ❏ Keyboard (Section 5.10)
   - ❏ Display assembly (Section 5.11)
   - ❏ Base enclosure (Section 5.12)
   - ❏ USB/S-Video board (Section 5.13)

Downloaded from www.Manualslib.com manuals search engine

2. Turn the USB/S-Video board upside down with the USB port facing you.
3. Remove the two Phillips PM1.5×3.5 screws ❶ that secure the Bluetooth module to the USB/S-Video board.
4. Disconnect the Bluetooth module cable ❷ from the USB/S-Video board.
5. Remove the Bluetooth module ❸.

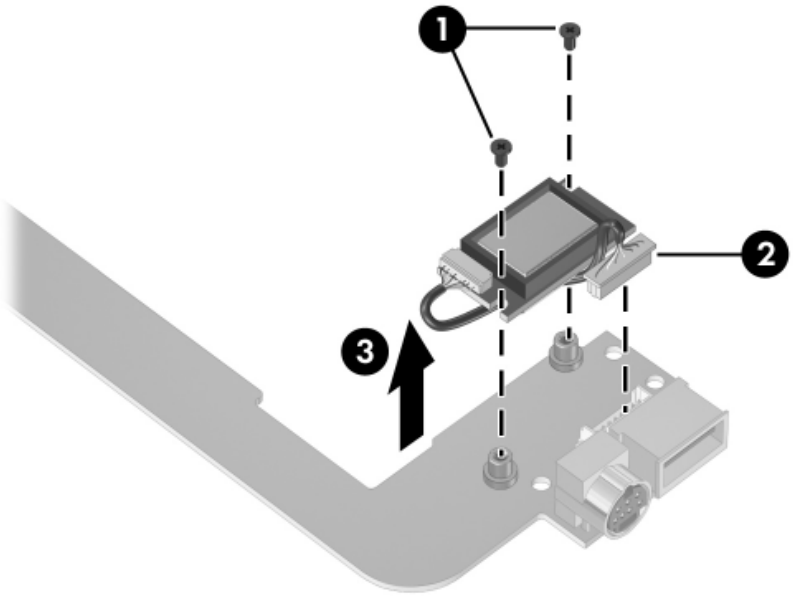

Removing the Bluetooth Module

Reverse the above procedure to install the Bluetooth module.

Downloaded from www.Manualslib.com manuals search engine

5.15 Speaker Assembly

Speaker Assembly Spare Part Number Information	
Speaker assembly	412395-001

1. Prepare the computer for disassembly (Section 5.3) and remove the following components:
   - ❏ Optical drive (Section 5.8)
   - ❏ Switch cover (Section 5.9)
   - ❏ Keyboard (Section 5.10)
   - ❏ Display assembly (Section 5.11)
   - ❏ Base enclosure (Section 5.12)

Downloaded from www.Manualslib.com manuals search engine

2. Disconnect the speaker cable ❶ from the system board.
3. Lift the speaker ❷ straight up to remove it from the top cover.

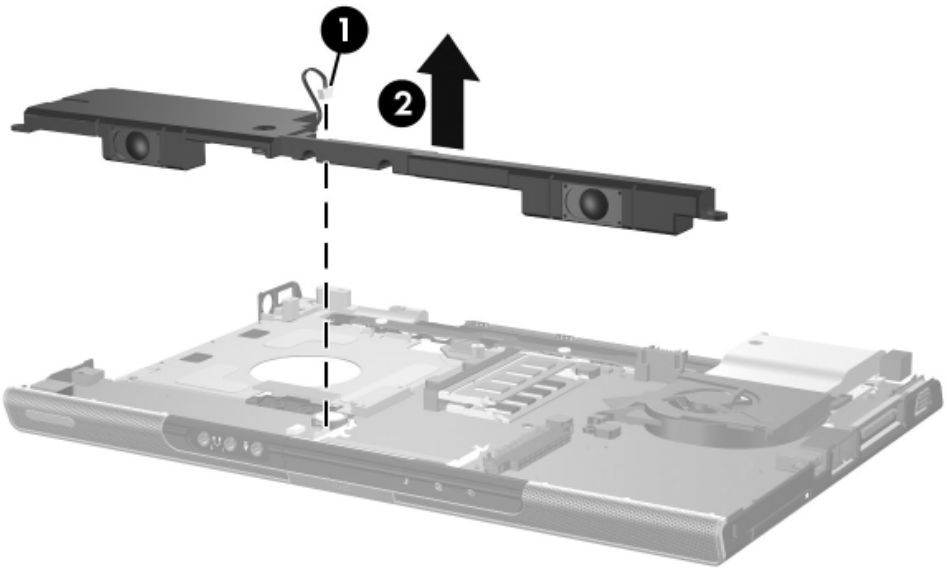

Removing the Speaker Assembly

Reverse the above procedure to install the speaker assembly.

Downloaded from www.Manualslib.com manuals search engine

5.16 RTC Battery

RTC Battery Spare Part Number Information	
RTC Battery	412390-001

1. Prepare the computer for disassembly (Section 5.3) and remove the following components:
   - ❏ Optical drive (Section 5.8)
   - ❏ Switch cover (Section 5.9)
   - ❏ Keyboard (Section 5.10)
   - ❏ Display assembly (Section 5.11)
   - ❏ Base enclosure (Section 5.12)

Downloaded from www.Manualslib.com manuals search engine

2. Remove the RTC battery from the socket on the system board.

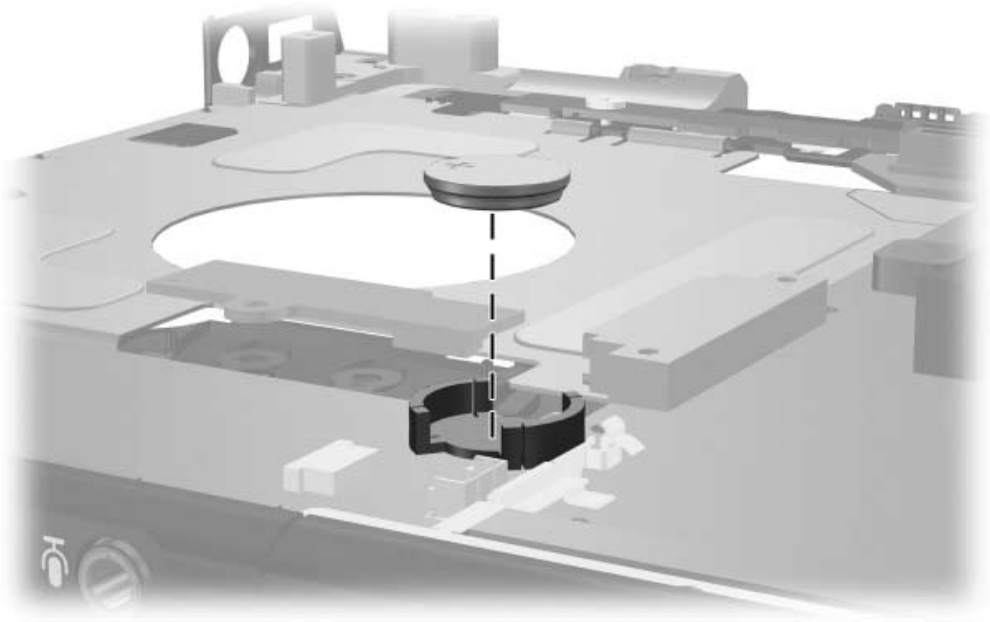

Removing the RTC Battery

Reverse the above procedure to install the RTC battery. Be sure that the RTC battery is installed with the “+” sign facing up.

Downloaded from www.Manualslib.com manuals search engine

5.17 Menu Control Button Board

Menu Control Button Board Spare Part Number Information	
Menu control button board (includes bracket and cable)	412401-001

1. Prepare the computer for disassembly (Section 5.3) and remove the following components:
   - ❏ Optical drive (Section 5.8)
   - ❏ Switch cover (Section 5.9)
   - ❏ Keyboard (Section 5.10)
   - ❏ Display assembly (Section 5.11)
   - ❏ Base enclosure (Section 5.12)
2. Position the top cover with the front panel toward you.

Downloaded from www.Manualslib.com manuals search engine

3. Remove the tape ❶ that secures the menu control button board cable to the system board.
4. Release the ZIF connector ❷ to which the menu control button board cable is connected and disconnect the cable ❸.

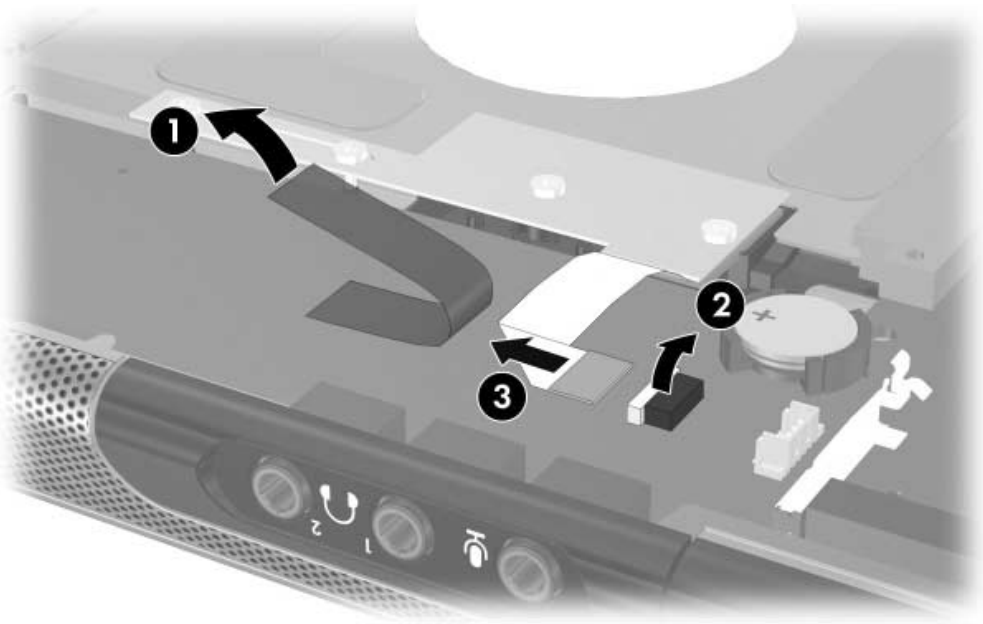

Disconnecting the Menu Control Button Board Cable

Downloaded from www.Manualslib.com manuals search engine

5. Remove the four Phillips PM2.5×3.0 screws ❶ that secure the menu control button board and shield to the top cover.
6. Remove the menu control button board shield ❷ and board ❸.

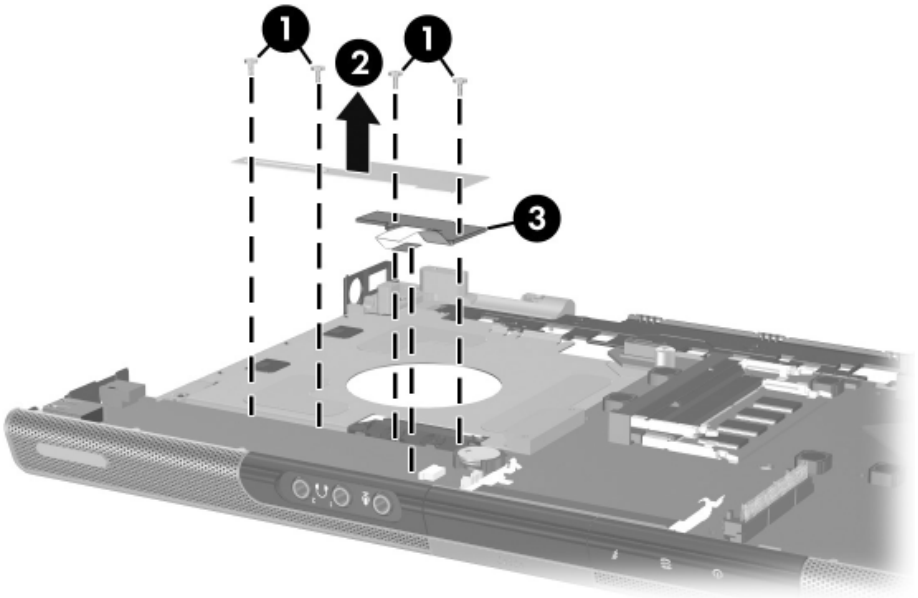

Removing the Menu Control Button Board and Shield

Reverse the above procedure to install the menu control button board and shield.

Downloaded from www.Manualslib.com manuals search engine

5.18 Fan/Heat Sink Assembly

Fan/Heat Sink Assembly Spare Part Number Information	
Fan/heat sink assembly (includes thermal pad)	412397-001

1. Prepare the computer for disassembly (Section 5.3) and remove the following components:
   - ❏ Optical drive (Section 5.8)
   - ❏ Switch cover (Section 5.9)
   - ❏ Keyboard (Section 5.10)
   - ❏ Display assembly (Section 5.11)
   - ❏ Base enclosure (Section 5.12)
2. Turn the computer upside down with the front toward you.

Downloaded from www.Manualslib.com manuals search engine

3. Disconnect the fan cable ❶ from the system board.
4. Loosen the four Phillips PM2.5×5.0 screws ❷ that secure the fan/heat sink assembly to the top cover.
5. Remove the fan/heat sink assembly ❸.

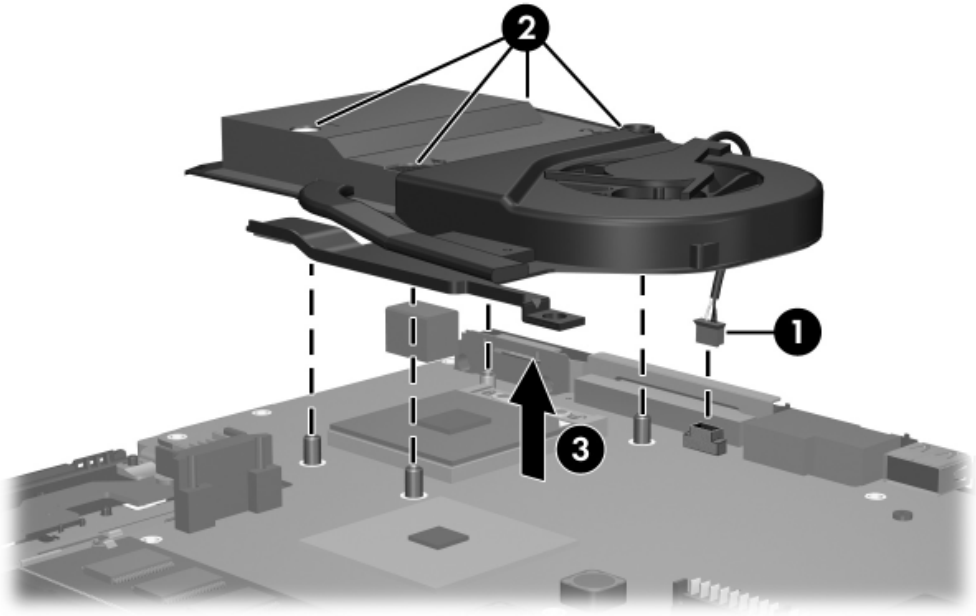

Removing the Fan/Heat Sink Assembly

Reverse the above procedure to install the fan/heat sink assembly.

Downloaded from www.Manualslib.com manuals search engine

5.19 Processor

Processor Spare Part Number Information	
Intel Core Duo T2500 (2.00-GHz)	412333-001
Intel Core Duo T2400 (1.83-GHz)	412334-001
Intel Core Duo T2300E (1.66-GHz)	419437-001
Intel Core Duo T2250 (1.73-GHz)	430897-001
Intel Core Duo T2300 (1.66-GHz)	412335-001
Intel Core Duo T2050 (1.60-GHz)	430898-001
Intel Core Solo T1350 (1.86-GHz)	430896-001
Intel Core Solo T1300 (1.66-GHz)	412332-001
Intel Celeron M 410 (1.46-GHz)	419436-001

1. Prepare the computer for disassembly (Section 5.3) and remove the following components:
   - ❏ Optical drive (Section 5.8)
   - ❏ Switch cover (Section 5.9)
   - ❏ Keyboard (Section 5.10)
   - ❏ Display assembly (Section 5.11)
   - ❏ Base enclosure (Section 5.12)
   - ❏ Fan/heat sink assembly (Section 5.18)

Downloaded from www.Manualslib.com manuals search engine

2. Turn the processor locking screw ❶ one-half turn counterclockwise until you feel a click.
3. Lift the processor ❷ straight up and remove it.

The gold triangle ❸ on the processor should be aligned in the front right corner when you install the processor.

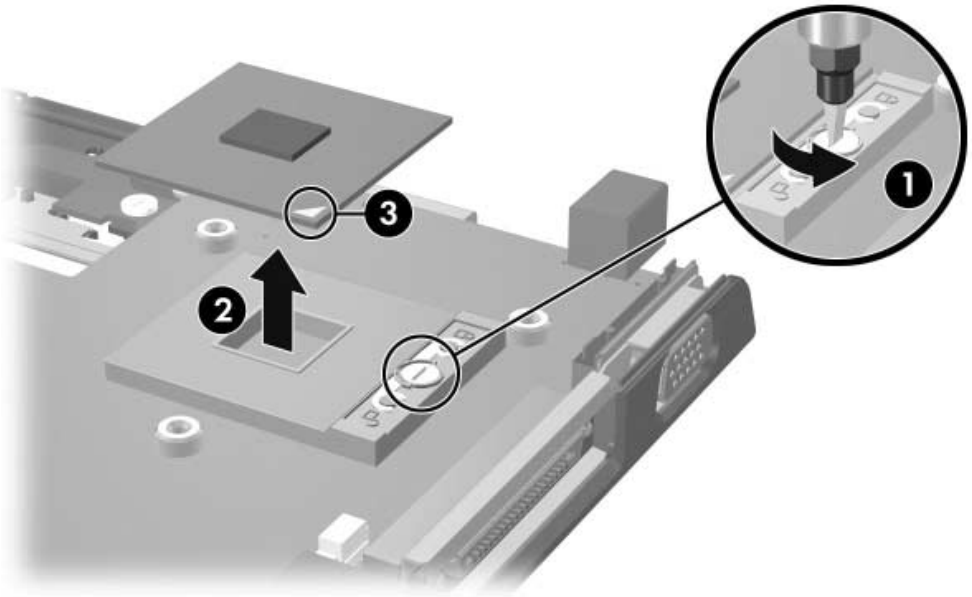

Removing the Processor

Reverse the above procedure to install a processor.

Downloaded from www.Manualslib.com manuals search engine

5.20 System Board

System Board Spare Part Number Information	
945GM for use on computer models with Web camera and microphone	430894-001
945GM for use on computer models without Web camera and microphone	430893-001
945GM for use on computer models sold at Best Buy	430895-001
940GML for use on computer models with Web camera and microphone	430892-001
940GM for use on computer models without Web camera and microphone	412238-001

All system board spares kits include a disk cell RTC battery.

When replacing the system board, ensure that the following components are removed from the defective system board and installed on the replacement system board:

- Memory modules (Section 5.6)
- Mini Card module (Section 5.7)
- RTC battery (Section 5.16)
- Menu control button board (Section 5.17)
- Fan/heat sink assembly (Section 5.18)
- Processor (Section 5.19)

Downloaded from www.Manualslib.com manuals search engine

1. Prepare the computer for disassembly (Section 5.3) and remove the following components:
   - ❏ Hard drive (Section 5.4)
   - ❏ Optical drive (Section 5.8)
   - ❏ Switch cover (Section 5.9)
   - ❏ Keyboard (Section 5.10)
   - ❏ Display assembly (Section 5.11)
   - ❏ Base enclosoure (Section 5.12)
   - ❏ USB/S-Video board (Section 5.13)
   - ❏ Speaker assembly (Section 5.15)
2. Turn the top cover right side up with the front toward you.

Downloaded from www.Manualslib.com manuals search engine

3. Release the ZIF connector ❶ to which the TouchPad cable is connected and disconnect the cable ❷ from the system board.

Disconnecting the TouchPad Cable

Downloaded from www.Manualslib.com manuals search engine

4. Turn the top cover upside down with the front toward you.
5. Release the ZIF connector ❶ to which the LED board cable is connected and disconnect the cable ❷ from the system board.
6. Remove the three silver Phillips PM2.5×5.0 screws ❸ that secure the system board to the top cover.

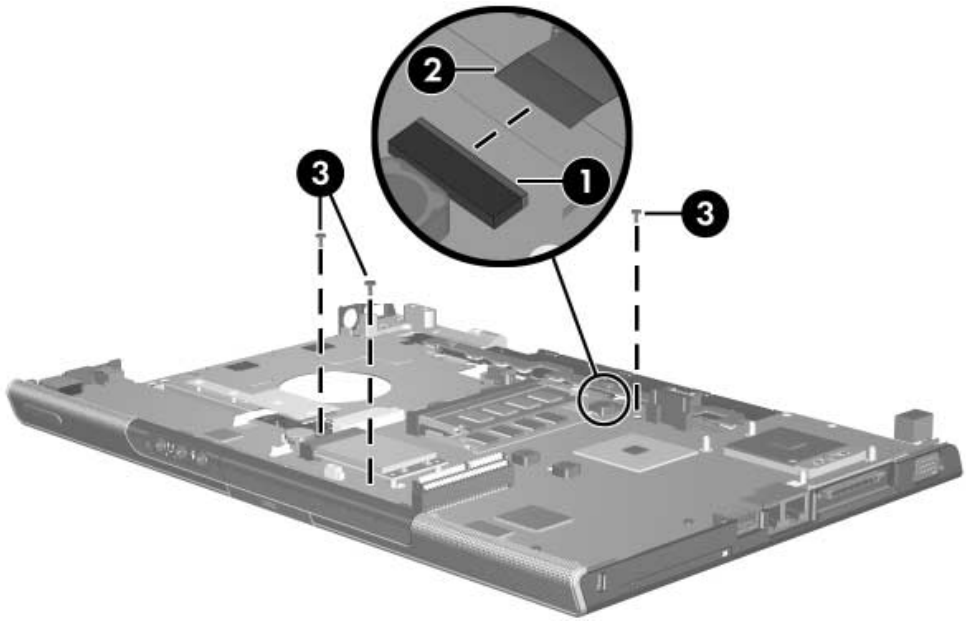

Disconnecting the LED Board Cable and Removing the System Board Screws

Downloaded from www.Manualslib.com manuals search engine

7. Flex and hold the left edge of the top cover ❶ to the left.
8. Lift the left side of the system board ❷ until the USB ❸ and 1394 connectors ❹ are clear.

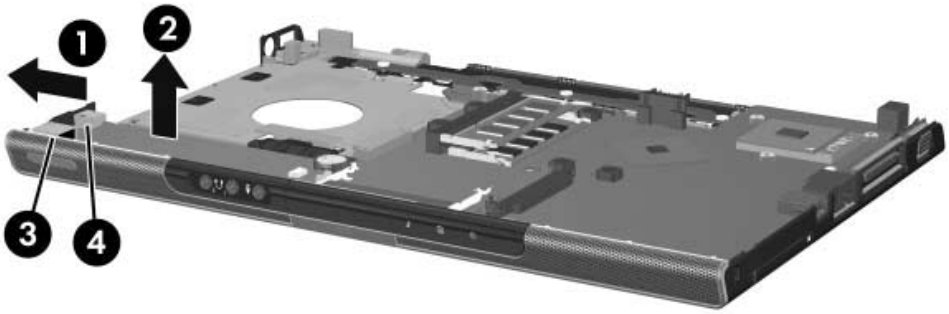

Releasing the System Board, Part 1

Downloaded from www.Manualslib.com manuals search engine

9. Flex and hold the front edge of the top cover ❶ forward.
10. Lift the front of the system board ❷ until the audio connectors ❸ are clear.

Releasing the System Board, Part 2

Downloaded from www.Manualslib.com manuals search engine

11. Slide the system board to the left at an angle and remove it from the top cover.

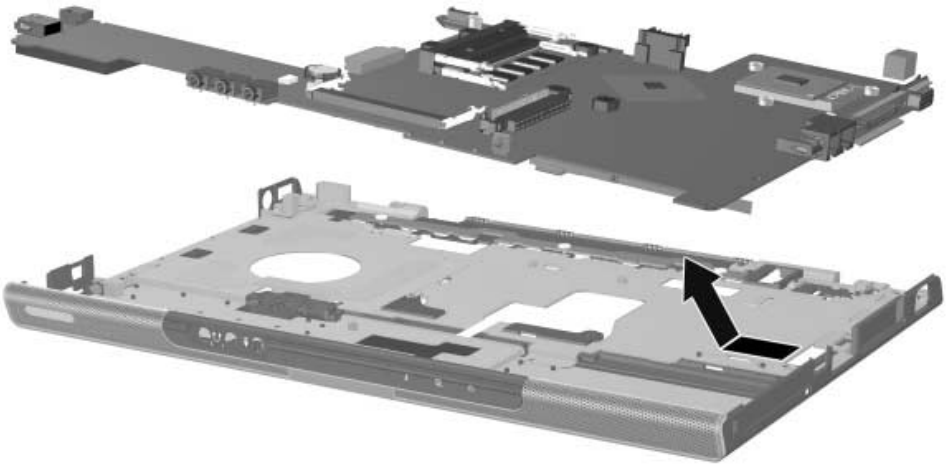

Removing the System Board

Reverse the above procedure to install the system board.

Downloaded from www.Manualslib.com manuals search engine

5.21 LED Board

LED Board Spare Part Number Information	
LED board (includes cable)	412399-001

1. Prepare the computer for disassembly (Section 5.3) and remove the following components:
   - ❏ Optical drive (Section 5.8)
   - ❏ Switch cover (Section 5.9)
   - ❏ Keyboard (Section 5.10)
   - ❏ Display assembly (Section 5.11)
   - ❏ Base enclosoure (Section 5.12)
   - ❏ USB/S-Video board (Section 5.13)
   - ❏ Speaker assembly (Section 5.15)
   - ❏ System board (Section 5.20)
2. Turn the computer upside down with the front panel toward you.

Downloaded from www.Manualslib.com manuals search engine

3. Release the ZIF connector ❶ to which the LED board cable is connected and disconnect the cable ❷ from the system board.
4. Remove the three Phillips PM1.5×2.0 screws ❸ that secure the LED board to the top cover.

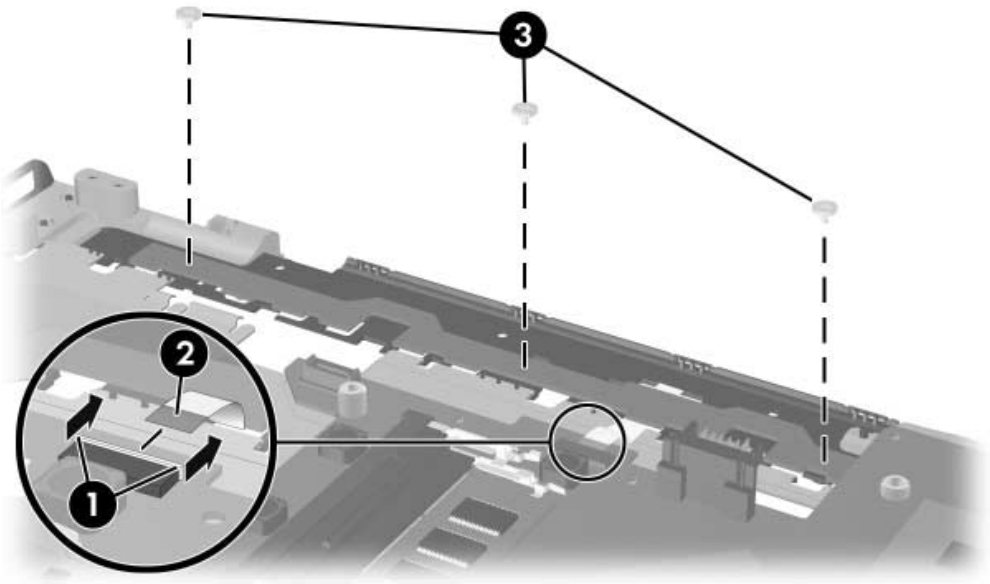

Removing the LED Board Screws

5. Remove the LED board.

Reverse the above procedure to install the LED board.

Downloaded from www.Manualslib.com manuals search engine

5.22 ExpressCard Assembly

ExpressCard Assembly Spare Part Number Information	
ExpressCard assembly	412330-001

1. Prepare the computer for disassembly (Section 5.3) and remove the following components:
   - ❏ Optical drive (Section 5.8)
   - ❏ Switch cover (Section 5.9)
   - ❏ Keyboard (Section 5.10)
   - ❏ Display assembly (Section 5.11)
   - ❏ Base enclosoure (Section 5.12)
   - ❏ USB/S-Video board (Section 5.13)
   - ❏ Speaker assembly (Section 5.15)
   - ❏ System board (Section 5.20)
2. Turn the computer upside down with the ExpressCard eject button toward you.

Downloaded from www.Manualslib.com manuals search engine

3. Remove the two Phillips PM2.0×2.0 screws that secure the ExpressCard assembly to the system board.

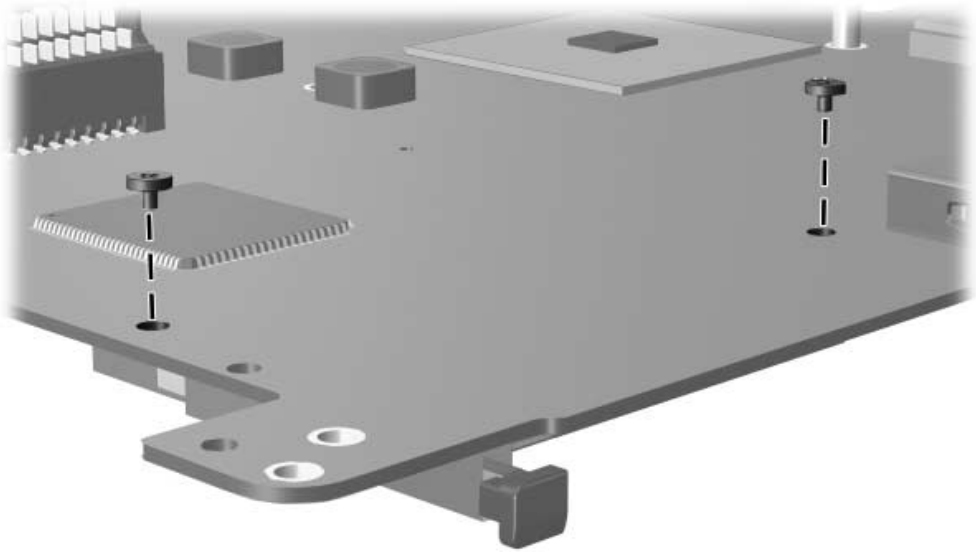

Removing the ExpressCard Assembly Screws

Downloaded from www.Manualslib.com manuals search engine

4. Turn the system board right side up with the ExpressCard eject button toward you.
5. Lift the back of the ExpressCard assembly to disconnect it from the system board.
6. Remove the ExpressCard assembly.

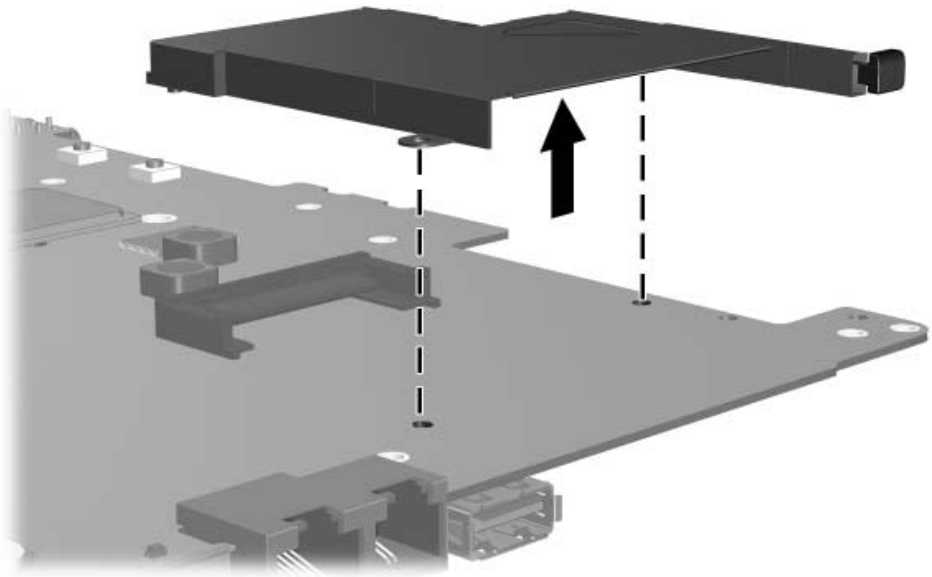

Removing the ExpressCard Assembly

Reverse the above procedure to install the ExpressCard assembly.

Downloaded from www.Manualslib.com manuals search engine

6

Specifications

This chapter provides physical and performance specifications.

Table 6-1

Computer

Dimensions		
Height (varies from front to back)	3.01 cm to 3.86 cm	1.19 in to 1.52 in
Width	23.46 cm	9.24 in
Depth	33.40 cm	13.15 in
Weight (varies by configuration)	2.44 kg	5.38 lb
Stand-alone power requirements		
Operating voltage	18.5 V dc to 19.0 V dc	
Operating current	3.5 A or 4.74 A	
Peak operating power	65 W	

Downloaded from www.Manualslib.com manuals search engine

Table 6-1

Computer *(Continued)*

Temperature		
Operating*	5°C to 35°C	41°F to 95°F
Nonoperating	-20°C to 60°C	-4°F to 140°F
Relative humidity (noncondensing)		
Operating	10% to 90%	
Nonoperating	5% to 95%, 38.7°C (101.6°F) maximum wet bulb temperature	
Maximum altitude (unpressurized)		
Operating (14.7 to 10.1 psia)	-15 m to 3,048 m	-50 ft to 10,000 ft
Nonoperating (14.7 to 4.4 psia)	-15 m to 12,192 m	-50 ft to 40,000 ft
Shock		
Operating	125 g, 2 ms, half-sine	
Nonoperating	200 g, 2 ms, half-sine	
Random Vibration		
Operating	0.75 g zero-to-peak, 10 Hz to 500 Hz, 0.25 oct/min sweep rate	
Nonoperating	1.50 g zero-to-peak, 10 Hz to 500 Hz, 0.5 oct/min sweep rate	

* Applicable product safety standards specify thermal limits for plastic surfaces. The computer operates well within this range of temperatures.

Downloaded from www.Manualslib.com manuals search engine

Table 6-2

14.0-inch, WXGA, SVA Display

Dimensions		
Height	27.94 cm	11.0 in
Width	20.83 cm	8.2 in
Diagonal	35.56 cm	14.0 in
Number of colors	Up to 16.8 million	
Contrast ratio	250:1	
Brightness	180 nits typical	
Pixel resolution		
Pitch	0.279 × 0.279 mm	
Format	1280 × 768	
Configuration	RGB vertical stripe	
Backlight	Edge lit	
Character display	80 × 25	
Total power consumption	4 W	
Viewing angle	+/-40° horizontal, +20/-40° vertical typical	

Downloaded from www.Manualslib.com manuals search engine

Table 6-3

Hard Drives

	80-GB	60-GB	60-GB	40-GB
Dimensions				
Height	9.5 mm	9.5 mm	9.5 mm	9.5 mm
Width	70 mm	70 mm	70 mm	70 mm
Weight	99 g	102 g	99 g	99 g
Interface type	ATA-5	ATA-5	ATA-5	ATA-5
Transfer rate				
Synchronous (maximum)	100 MB/sec	100 MB/sec	100 MB/sec	100 MB/sec
Security	ATA security	ATA security	ATA security	ATA security
Seek times (typical read, including setting)				
Single track	3 ms	3 ms	3 ms	3 ms
Average	13 ms	13 ms	13 ms	13 ms
Maximum	24 ms	24 ms	24 ms	24 ms
Logical blocks†	156,301,488	117,210,240	117,210,240	78,140,160
Disk rotational speed	5400 rpm	5400 rpm	4200 rpm	4200 rpm
Operating temperature	5°C to 55°C (41°F to 131°F)			

✎ Certain restrictions and exclusions apply. Consult Customer Care for details.

*1 GB = 1 billion bytes when referring to hard drive storage capacity. Accessible capacity is less.

†Actual drive specifications may differ slightly.

Downloaded from www.Manualslib.com manuals search engine

Table 6-4

Primary 6-cell, Li-Ion Battery

Dimensions		
Height	2.00 cm	0.79 in
Width	9.40 cm	3.70 in
Depth	13.40 cm	5.28 in
Weight	0.34 kg	0.75 lb
Energy		
Voltage	11.1 V	
Amp-hour capacity	4.4 Ah	
Watt-hour capacity	48 Wh	
Temperature		
Operating	5°C to 45°C	41°F to 113°F
Nonoperating	0°C to 60°C	32°F to 140°F

Downloaded from www.Manualslib.com manuals search engine

Table 6-5

DVD/CD-RW Combo Drive

Applicable disc	**Read:** DVD-R, DVD-RW, DVD-ROM (DVD-5, DVD-9, DVD-10, DVD-18), CD-ROM (Mode 1 and 2) CD Digital Audio CD-XA ready (Mode 2, Form 1 and 2) CD-I ready (Mode 2, Form 1 and 2) CD-R, CD-RW Photo CD (single and multisession) CD-Bridge	**Write:** CD-R and CD-RW
Center hole diameter	1.5 cm (0.59 in)	
Disc diameter		
Standard disc	12 cm (4.72 in)	
Mini disc	8 cm (3.15 in)	

Downloaded from www.Manualslib.com manuals search engine

Table 6-5

DVD/CD-RW Combo Drive *(Continued)*

Disc thickness	1.2 mm (0.047 in)	
Track pitch	0.74 µm	
Access time	CD media	DVD media
Random	< 110 ms	< 130 ms
Full stroke	< 210 ms	< 225 ms
Audio output level	Line-out, 0.7 V rms	
Cache buffer	2 MB	
Data transfer rate		
CD-R (24X)	3600 KB/s (150 KB/s at 1X CD rate)	
CD-RW (10X)	1500 KB/s (150 KB/s at 1X CD rate)	
CD-ROM (24X)	3600 KB/s (150 KB/s at 1X CD rate)	
DVD (8X)	10,800 KB/s (1352 KB/s at 1X DVD rate)	
Multiword DMA mode 2	16.6 MB/s	
Startup time	< 15 seconds	
Stop time	< 6 seconds	

Downloaded from www.Manualslib.com manuals search engine

Table 6-6

DVD±RW/R and CD-RW Double-Layer Combo Drive

Applicable disc	**Read:** DVD-R, DVD-RW, DVD-ROM (DVD-5, DVD-9, DVD-10, DVD-18), CD-ROM (Mode 1 and 2) CD Digital Audio CD-XA ready (Mode 2, Form 1 and 2) CD-I ready (Mode 2, Form 1 and 2) CD-R, CD-RW Photo CD (single and multisession) CD-Bridge	**Write:** CD-R and CD-RW DVD-R and DVD-RW
Center hole diameter	1.5 cm (0.59 in)	
Disc diameter		
Standard disc	12 cm (4.72 in)	
Mini disc	8 cm (3.15 in)	

Downloaded from www.Manualslib.com manuals search engine

Table 6-6

DVD±RW/R and CD-RW Double-Layer Combo Drive

Disc thickness	1.2 mm (0.047 in)	
Track pitch	0.74 µm	
Access time	CD	DVD
Random	< 175 ms	< 230 ms
Full stroke	< 285 ms	< 335 ms
Audio output level	Audio-out, 0.7 Vrms	
Cache buffer	2 MB	
Data transfer rate		
CD-R (16X)	2,400 KB/s (150 KB/s at 1X CD rate)	
CD-RW (8X)	1,200 KB/s (150 KB/s at 1X CD rate)	
CD-ROM (24X)	3,600 KB/s (150 KB/s at 1X CD rate)	
DVD (8X)	10,800 KB/s (1,352 KB/s at 1X DVD rate)	
DVD-R (4X)	5,400 KB/s (1,352 KB/s at 1X DVD rate)	
DVD-RW (2X)	2,700 KB/s (1,352 KB/s at 1X DVD rate)	
Multiword DMA mode 2	16.6 MB/s	
Startup time	< 15 seconds	
Stop time	< 6 seconds	

Downloaded from www.Manualslib.com manuals search engine

Table 6-7

System DMA

Hardware DMA	System Function
DMA0	Not applicable
DMA1	Not applicable
DMA2	Not applicable
DMA3	Not applicable
DMA4	Direct memory access controller
DMA5	Available for ExpressCard
DMA6	Not assigned
DMA7	Not assigned

Downloaded from www.Manualslib.com manuals search engine

Table 6-8

System Interrupts

Hardware IRQ	System Function
IRQ0	System timer
IRQ1	Quick Launch buttons
IRQ2	Cascaded
IRQ3	USB2 Enhanced Host Controller—24CD
IRQ4	COM1
IRQ5*	Conexant AC—Link Audio SMBus Controller—24C3 Data Fax Modem with SmartCP
IRQ6	Diskette drive
IRQ7*	Parallel port
IRQ8	System CMOS/real-time clock
IRQ9*	Microsoft ACPI-compliant system
IRQ10*	USB UHCI controller—24C2 GM/GME Graphic Controller Realtek RTL8139 Family PCI fast Ethernet Controller
IRQ11	USB EHCI controller—24CD USB UHCI controller—24C4 USB UHCI controller—24C7 Pro/Wireless 2200BG TI OHCI 1394 host controller TI PCI1410 CardBus controller

*Default configuration

ExpressCard may assert IRQ3, IRQ4, IRQ5, IRQ7, or IRQ20.

Downloaded from www.Manualslib.com manuals search engine

Table 6-8

System Interrupts *(Continued)*

Hardware IRQ	System Function
IRQ12	Synaptics PS/2 port pointing device
IRQ13	Numeric data processor
IRQ14	Primary IDE channel
IRQ15	Secondary IDE channel
IRQ17	Conexant AC -Link Audio
IRQ17	Soft V90 Data Fax Modem with SmartCP
IRQ17	ATi Mobility Radeon Xpress 200 Series
IRQ19	Standard Enhanced PCI to USB Host Controller
IRQ19	Standard OpenHCD USB Host Controller
IRQ19	Standard OpenHCD USB Host Controller
IRQ20	TI 6411 PCIxx21/x515 Cardbus Controller
IRQ20	TI OHCI Compliant IEEE 1394 Host Controller
IRQ21	TI Integrated PCIxx21 FlashMedia Controller
IRQ21	Broadcom 802.11b/g WLAN
IRQ21	Microsoft ACPI-compliant system
IRQ22	Realtek RTL8100CL Family PCI fast Ethernet Controller
IRQ23	SDA Standard Compliant SD Host Controller

*Default configuration

ExpressCard may assert IRQ3, IRQ4, IRQ5, IRQ7, or IRQ20.

Downloaded from www.Manualslib.com manuals search engine

Table 6-9

System I/O Addresses

I/O Address (hex)	**System Function** (shipping configuration)
0x00000000-0x00000CF7	PCI bus
0x00000000-0x00000CF7	Direct memory access controller
0x00000020-0x00000021	Programmable interrupt controller
0x0000002E-0x0000002F	System board resources
0x00000040-0x00000043	System timer
0x00000060-0x00000060	Quick Launch Buttons
0x00000061-0x00000061	System speaker
0x00000062-0x00000062	Microsoft ACPI-Compliant Embedded Controller
0x00000064-0x00000064	Quick Launch Buttons
0x00000066-0x00000066	Microsoft ACPI-Compliant Embedded Controller
0x00000070-0x00000071	System CMOS/real time clock
0x00000072-0x00000073	System board resources
0x00000080-0x0000008F	Direct memory access controller
0x00000092-0x00000092	System board resources
0x000000A0-0x000000A1	Programmable interrupt controller
0x000000B0-0x000000B1	System board resources
0x000000C0-0x000000DF	Direct memory access controller
0x000000F0-0x000000FE	Numeric data processor
0x00000170-0x00000177	Secondary IDE Channel

Downloaded from www.Manualslib.com manuals search engine

Table 6-9

System I/O Addresses *(Continued)*

I/O Address (hex)	**System Function** (shipping configuration)
0x000001F0-0x000001F7	Primary IDE Channel
0x00000220-0x0000022F	System board resources
0x00000274-0x00000277	ISAPNP Read Data Port
0x00000279-0x00000279	ISAPNP Read Data Port
0x00000280-0x00000293	System board resources
0x00000376-0x00000376	Secondary IDE Channel
0x000003B0-0x000003BB	PCI standard PCI-to-PCI bridge
0x000003B0-0x000003BB	ATI MOBILITY RADEON Xpress 200 Series
0x000003C0-0x000003DF	PCI standard PCI-to-PCI bridge
0x000003C0-0x000003DF	ATI MOBILITY RADEON Xpress 200 Series
0x000003F6-0x000003F6	Primary IDE Channel
0x0000040B-0x0000040B	System board resources
0x000004D0-0x000004D1	System board resources
0x000004D6-0x000004D6	System board resources
0x00000530-0x00000537	System board resources
0x00000870-0x0000087F	System board resources
0x00000A79-0x00000A79	ISAPNP Read Data Port
0x00000C00-0x00000C01	System board resources
0x00000C14-0x00000C14	System board resources
0x00000C50-0x00000C52	System board resources
0x00000C6C-0x00000C6C	System board resources

Downloaded from www.Manualslib.com manuals search engine

Table 6-9

System I/O Addresses *(Continued)*

I/O Address (hex)	**System Function** (shipping configuration)
0x00000C6F-0x00000C6F	System board resources
0x00000CD4-0x00000CD5	System board resources
0x00000CD6-0x00000CD7	System board resources
0x00000CD8-0x00000CDF	System board resources
0x00000D00-0x0000FFFF	PCI bus
0x00000F40-0x00000F47	System board resources
0x00001080-0x00001080	System board resources
0x00008000-0x0000805F	System board resources
0x00008100-0x000081FF	System board resources
0x00008400-0x0000840F	ATI SMBus
0x00008410-0x0000841F	Standard Dual Channel PCI IDE Controller
0x00009000-0x00009FFF	PCI standard PCI-to-PCI bridge
0x00009000-0x00009FFF	ATI MOBILITY RADEON Xpress 200 Series
0x0000A000-0x0000A0FF	Realtek RTL8139/810x Family Fast Ethernet NIC
0x0000F000-0x0000FFFF	PCI standard PCI-to-PCI bridge
0x0000FD00-0x0000FDFF	Texas Instruments PCIxx21/x515 Cardbus Controller
0x0000FE00-0x0000FEFF	Texas Instruments PCIxx21/x515 Cardbus Controller

Downloaded from www.Manualslib.com manuals search engine

Table 6-10

System Memory Map

Memory Map Address (hex)	**System Function** (shipping configuration)
0xD4100000-0xD41FFFFF	PCI standard PCI-to-PCI bridge
0xD4100000-0xD41FFFFF	ATI MOBILITY RADEON Xpress 200 Series
0xD8000000-0xDBFFFFFF	PCI standard PCI-to-PCI bridge
0xD8000000-0xDBFFFFFF	ATI MOBILITY RADEON Xpress 200 Series
0xFAC00000-0xFEBFFFFF	PCI standard PCI-to-PCI bridge
0xF6C00000-0xFABFFFFF	PCI standard PCI-to-PCI bridge
0xD4000000-0xD4000FFF	Standard OpenHCD USB Host Controller
0xD4001000-0xD4001FFF	Standard OpenHCD USB Host Controller
0xD4002000-0xD4002FFF	Standard Enhanced PCI to USB Host Controller
0xD4003000-0xD40033FF	ATI SMBus
0xFFF80000-0xFFFFFFFF	System board
0xE0000000-0xE03FFFFF	System board
0xE0000000-0xE03FFFFF	System board resources
0x0000-0x0FFF	System board

Downloaded from www.Manualslib.com manuals search engine

Table 6-10

System Memory Map *(Continued)*

Memory Map Address (hex)	**System Function** (shipping configuration)
0xD4208000-0xD42087FF	Texas Instruments OHCI Compliant IEEE 1394 Host Controller
0xD4200000-0xD4203FFF	Texas Instruments OHCI Compliant IEEE 1394 Host Controller
0xD4204000-0xD4205FFF	Broadcom 802.11b/g WLAN
0xFFEFF000-0xFFEFFFFF	Texas Instruments PCIxx21/x515 Cardbus Controller
0xFFEFE000-0xFFEFEFFF	Texas Instruments PCIxx21/x515 Cardbus Controller
0xF2C00000-0xF6BFFFFF	Texas Instruments PCIxx21/x515 Cardbus Controller
0xD4206000-0xD4207FFF	Texas Instruments PCIxx21 Integrated FlashMedia Controller
0xD4209000-0xD42090FF	SDA Standard Compliant SD Host Controller
0xD4208C00-0xD4208CFF	SDA Standard Compliant SD Host Controller
0xD4208800-0xD42088FF	SDA Standard Compliant SD Host Controller

Downloaded from www.Manualslib.com manuals search engine

Table 6-10

System Memory Map *(Continued)*

Memory Map Address (hex)	**System Function** (shipping configuration)
0xD4209400-0xD42094FF	Realtek RTL8139/810x Family Fast Ethernet NIC
0xD4003400-0xD40034FF	Conexant AC-Link Audio
0xD4003800-0xD40038FF	SoftV90 Data Fax Modem with SmartCP
0xFEC00000-0xFEC00FFF	System board resources
0xFEE00000-0xFEE00FFF	System board resources
0xA0000-0xBFFFF	PCI bus
0xA0000-0xBFFFF	PCI standard PCI-to-PCI bridge
0xA0000-0xBFFFF	ATI MOBILITY RADEON Xpress 200 Series
0xD6000-0xD7FFF	PCI bus
0xDC000-0xDDFFF	PCI bus
0xDD000-0xDDFFF	Texas Instruments PCIxx21/x515 Cardbus Controller
0xE0000-0xFFFFF	System board
0x40000000-0xFFFFFFFF	PCI bus

Downloaded from www.Manualslib.com manuals search engine

A

Screw Listing

This appendix provides specification and reference information for the screws used in the computer. All screws listed in this appendix are available in the Screw Kit, spare part number 412386-001, and the Display Screw Kit, spare part number 417713-001.

Downloaded from www.Manualslib.com manuals search engine

Table A-1

Black Phillips PM2.0×5.0 Screw

mm	Color	Qty.	Length	Thread	Head Width
	Black	5	5.0 mm	2.0 mm	4.0 mm

Where used:

❶ Two screws that secure the hard drive cover to the computer (screws are captured on the cover by C clips; documented in Section 5.3)

❷ Two screws that secure the memory module compartment cover to the computer (screws are captured on the cover by C clips; documented in Section 5.6)

❸ One screw that secures the Mini Card compartment cover to the computer (screw is captured on the cover by a C clip; documented in Section 5.7)

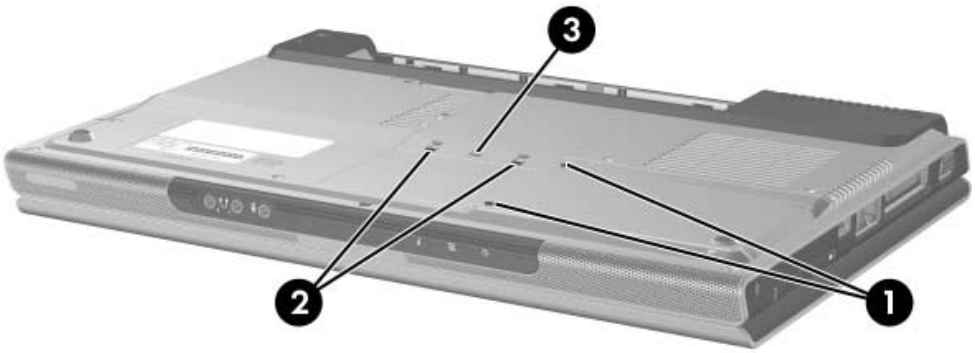

Black Phillips PM2.0×5.0 Screw Locations

Downloaded from www.Manualslib.com manuals search engine

Table A-2

Phillips PM2.5×4.0 Screw

mm	Color	Qty.	Length	Thread	Head Width
	Silver	4	4.0 mm	2.5 mm	4.0 mm

Where used:

4 screws that secure the hard drive frame to the hard drive (documented in Section 5.3)

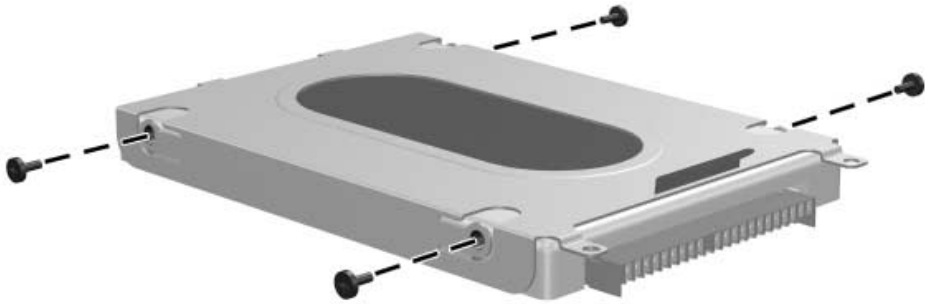

Phillips PM2.5×4.0 Screw Locations

Downloaded from www.Manualslib.com manuals search engine

Table A-3

Phillips PM2.0×8.5 Screw

mm	Color	Qty.	Length	Thread	Head Width
	Black	17	8.5 mm	2.0 mm	4.0 mm

Where used:

One screw that secures the optical drive to the computer (documented in Section 5.8)

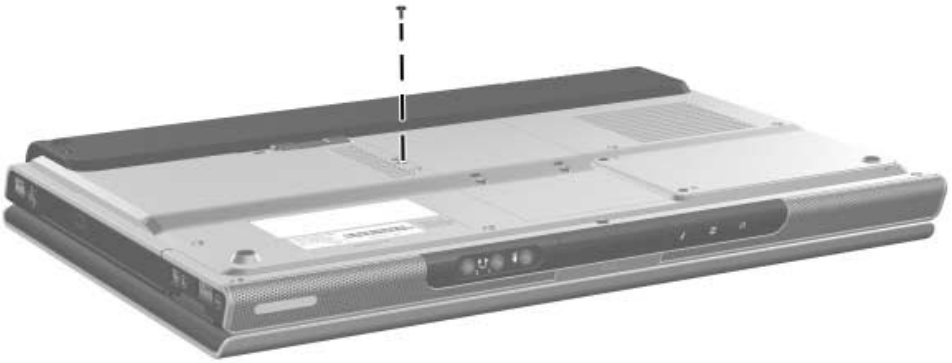

Phillips PM2.0×8.5 Screw Location

Downloaded from www.Manualslib.com manuals search engine

Table A-3

Phillips PM2.0×8.5 Screw *(Continued)*

mm	Color	Qty.	Length	Thread	Head Width
	Black	17	8.5 mm	2.0 mm	4.0 mm

Where used:

2 screws that secure the base enclosure to the top cover (documented in Section 5.12)

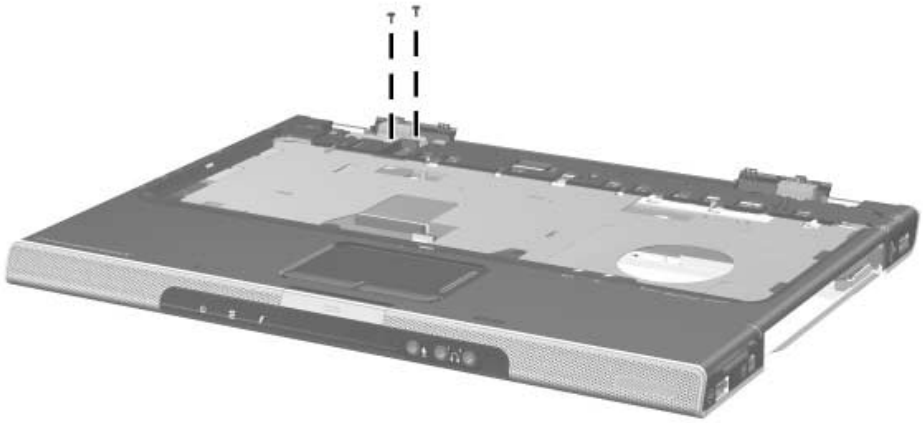

Phillips PM2.0×8.5 Screw Locations

Downloaded from www.Manualslib.com manuals search engine

Table A-3

Phillips PM2.0×8.5 Screw *(Continued)*

mm	Color	Qty.	Length	Thread	Head Width
	Black	17	8.5 mm	2.0 mm	4.0 mm

Where used:

14 screws that secure the base enclosure to the computer (documented in Section 5.12)

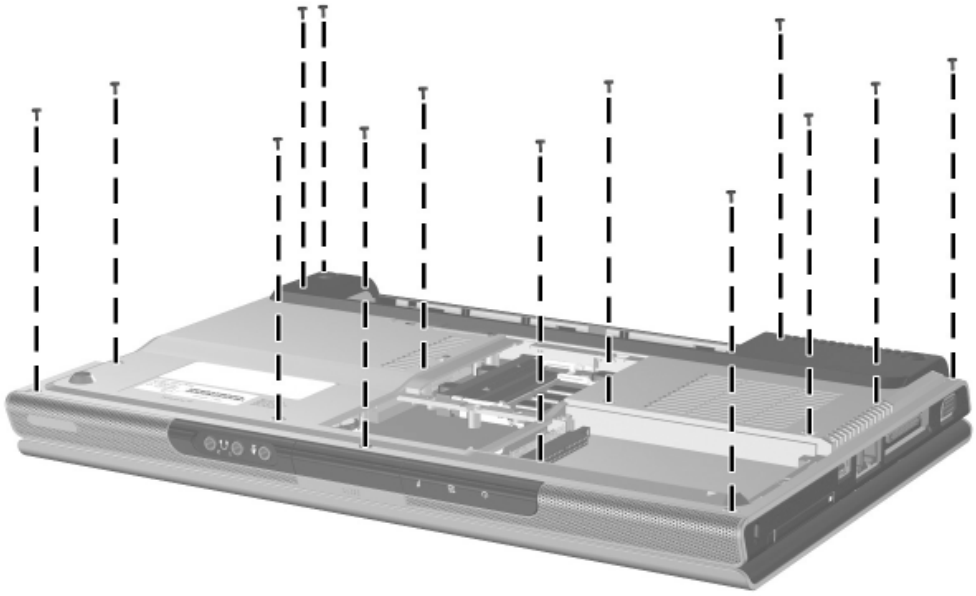

Phillips PM2.0×8.5 Screw Locations

Downloaded from www.Manualslib.com manuals search engine

Table A-4

Silver Phillips PM2.0×5.0 Screw

mm	Color	Qty.	Length	Thread	Head Width
	Silver	20	5.0 mm	2.0 mm	4.0 mm

Where used:

3 screws that secure the switch cover to the computer (documented in Section 5.9)

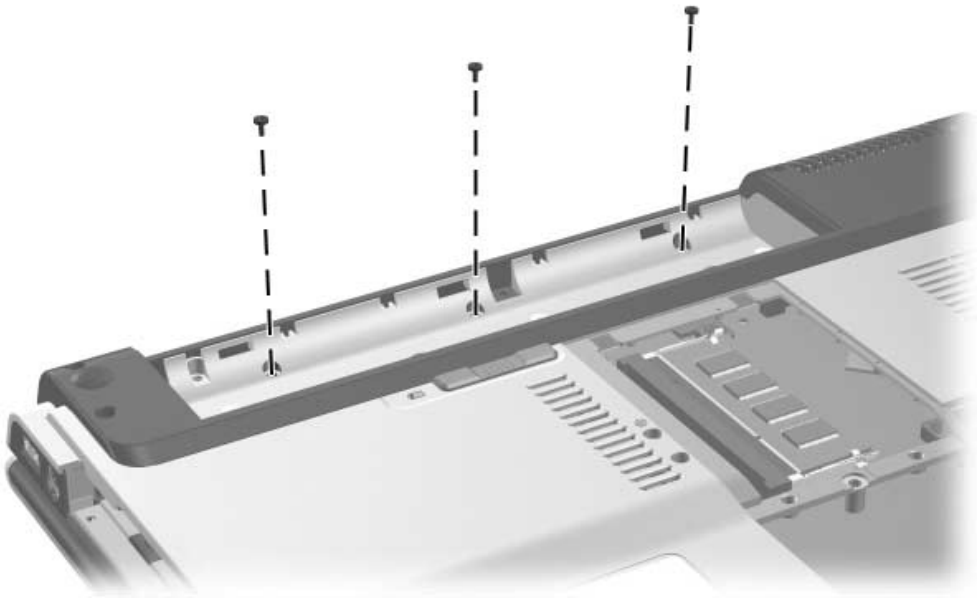

Silver Phillips PM2.0×5.0 Screw Locations

Downloaded from www.Manualslib.com manuals search engine

Table A-4

Silver Phillips PM2.0×5.0 Screw *(Continued)*

mm	Color	Qty.	Length	Thread	Head Width
	Silver	20	5.0 mm	2.0 mm	4.0 mm

Where used:

2 screws that secure the keyboard to the computer (documented in Section 5.10)

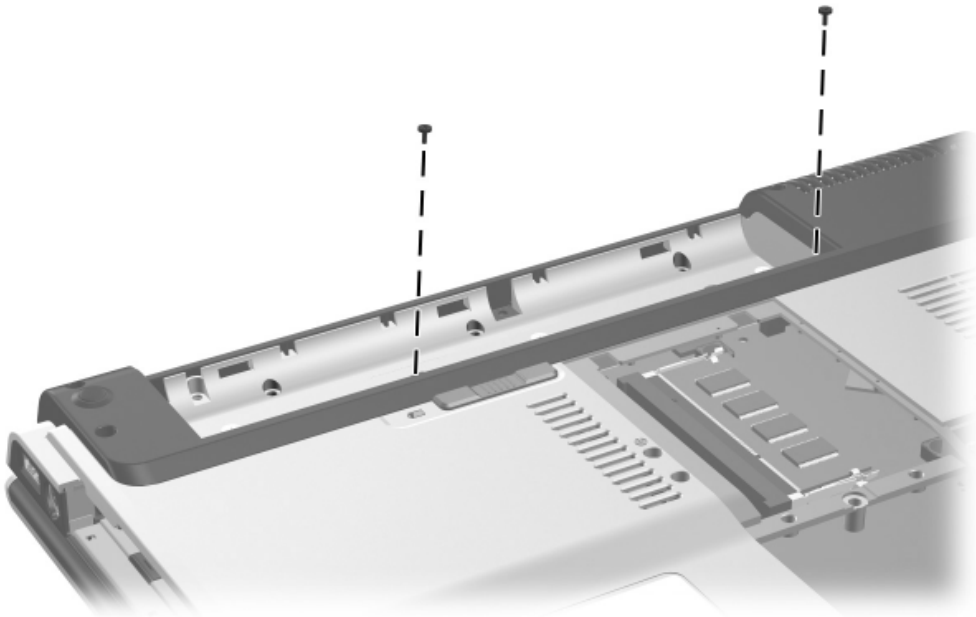

Silver Phillips PM2.0×5.0 Screw Locations

Downloaded from www.Manualslib.com manuals search engine

Table A-4

Silver Phillips PM2.0×5.0 Screw *(Continued)*

mm	Color	Qty.	Length	Thread	Head Width
	Silver	20	5.0 mm	2.0 mm	4.0 mm

Where used:

2 screws that secure the display panel to the display assembly (documented in Section 5.11)

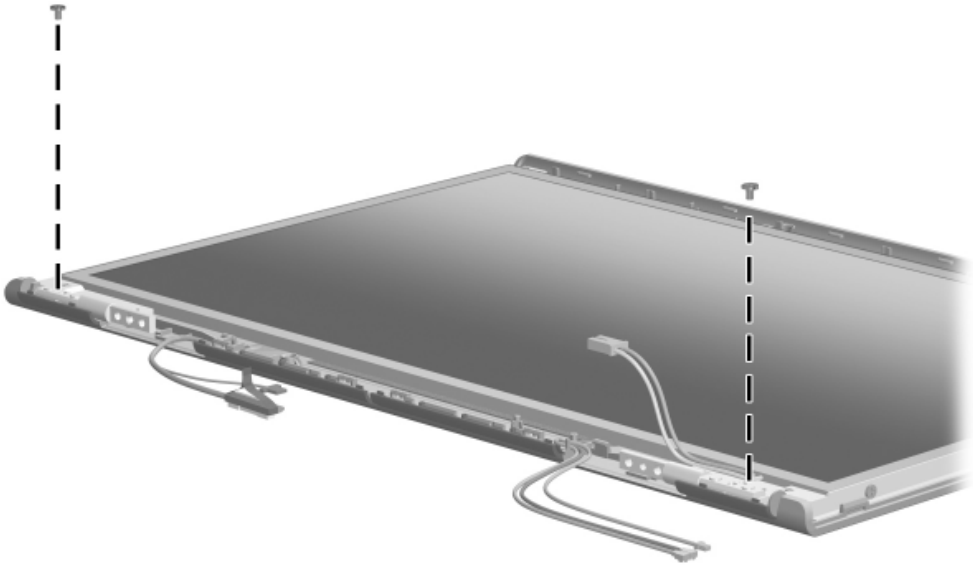

Silver Phillips PM2.0×5.0 Screw Locations

Downloaded from www.Manualslib.com manuals search engine

Table A-4

Silver Phillips PM2.0×5.0 Screw *(Continued)*

mm	Color	Qty.	Length	Thread	Head Width
	Silver	20	5.0 mm	2.0 mm	4.0 mm

Where used:

4 screws that secure the base enclosure to the computer (documented in Section 5.12)

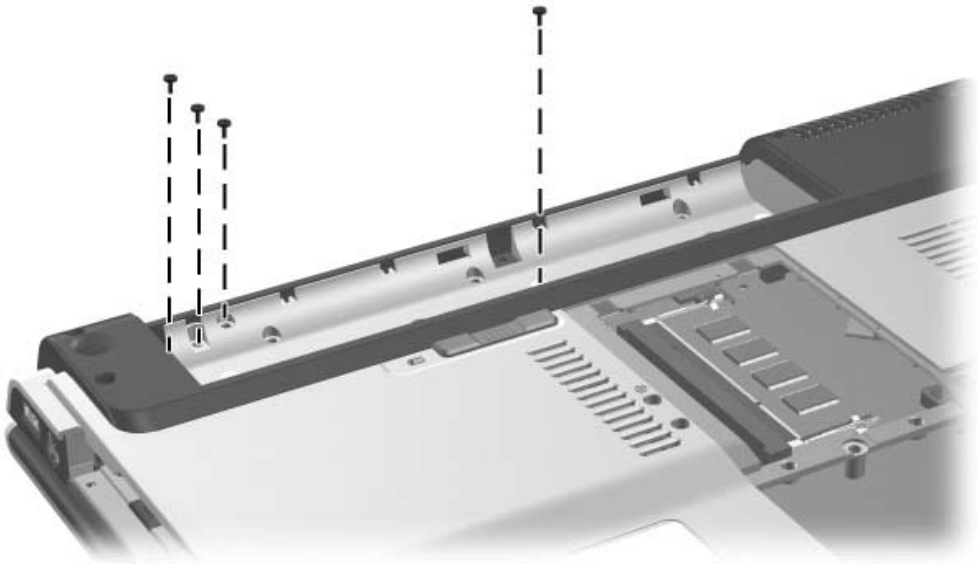

Silver Phillips PM2.0×5.0 Screw Locations

Downloaded from www.Manualslib.com manuals search engine

Table A-4

Silver Phillips PM2.0×5.0 Screw *(Continued)*

mm	Color	Qty.	Length	Thread	Head Width
	Silver	20	5.0 mm	2.0 mm	4.0 mm

Where used:

2 screws that secure the USB/S-Video board to the computer (documented in Section 5.13)

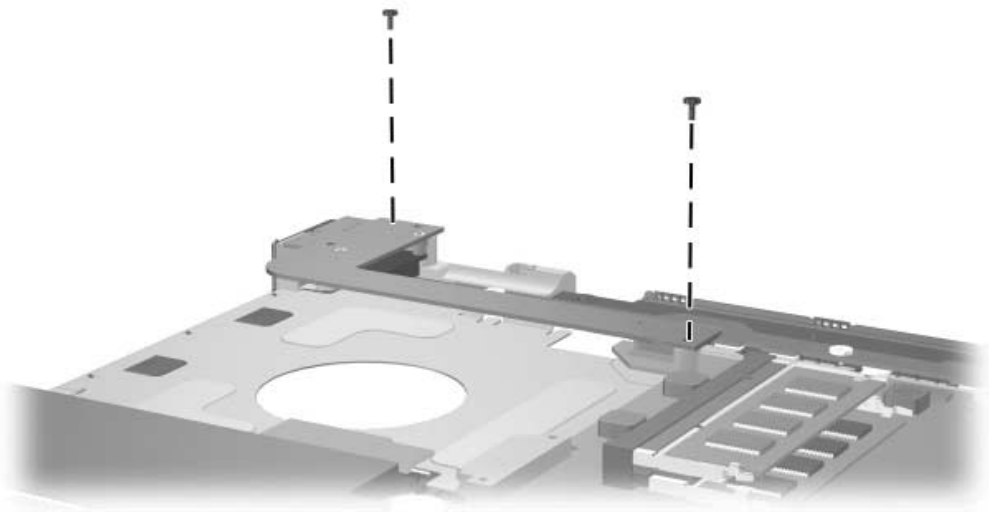

Silver Phillips PM2.0×5.0 Screw Locations

Downloaded from www.Manualslib.com manuals search engine

Table A-4

Silver Phillips PM2.0×5.0 Screw *(Continued)*

mm	Color	Qty.	Length	Thread	Head Width
	Silver	20	5.0 mm	2.0 mm	4.0 mm

Where used:

4 screws that secure the fan/heat sink assembly to the computer (documented in Section 5.18)

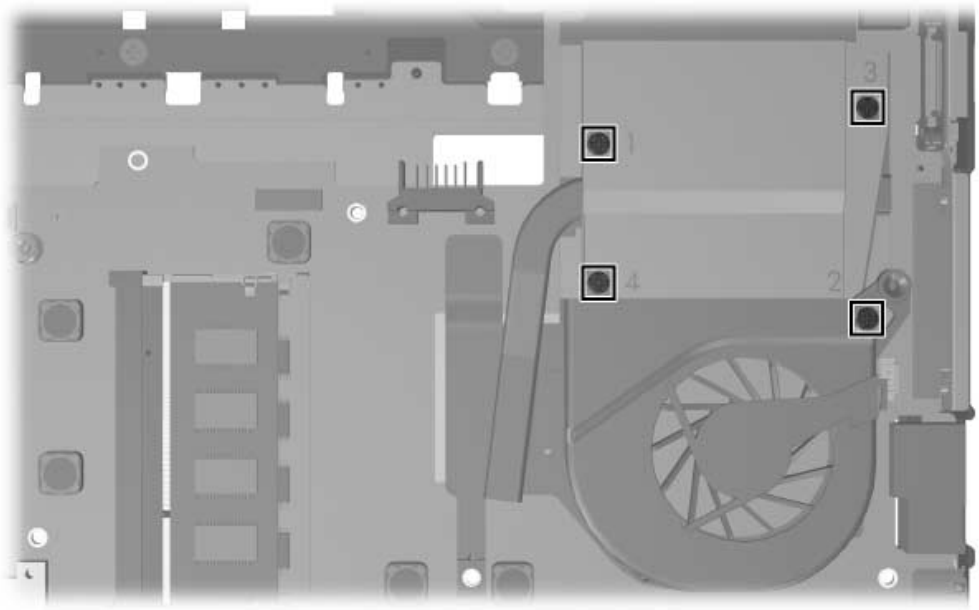

Silver Phillips PM2.0×5.0 Screw Locations

Downloaded from www.Manualslib.com manuals search engine

Table A-4

Silver Phillips PM2.0×5.0 Screw *(Continued)*

mm	Color	Qty.	Length	Thread	Head Width
	Silver	20	5.0 mm	2.0 mm	4.0 mm

Where used:

3 screws that secure the system board to the computer (documented in Section 5.20)

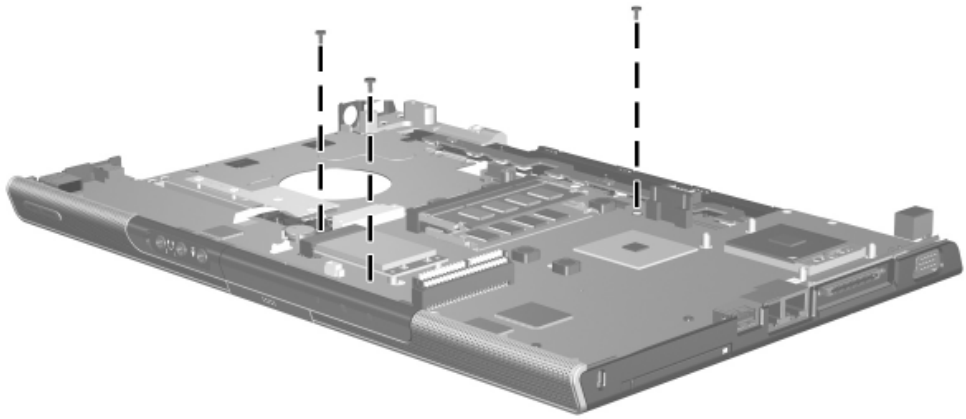

Silver Phillips PM2.0×5.0 Screw Locations

Downloaded from www.Manualslib.com manuals search engine

Table A-5

Phillips PM2.0×3.0 Screw

mm	Color	Qty.	Length	Thread	Head Width
	Black	15	3.0 mm	2.0 mm	4.0 mm

Where used:

2 screws that secure the optical drive bracket to the optical drive (documented in Section 5.8)

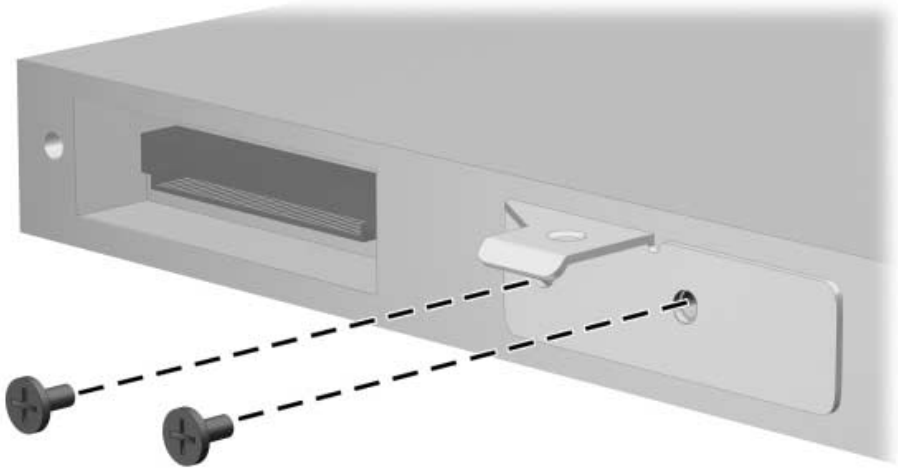

Phillips PM2.0×3.0 Screw Locations

Downloaded from www.Manualslib.com manuals search engine

Table A-5

Phillips PM2.0×3.0 Screw *(Continued)*

mm	Color	Qty.	Length	Thread	Head Width
	Black	15	3.0 mm	2.0 mm	4.0 mm

Where used:

One screw that secures the display inverter to the display assembly (documented in Section 5.11)

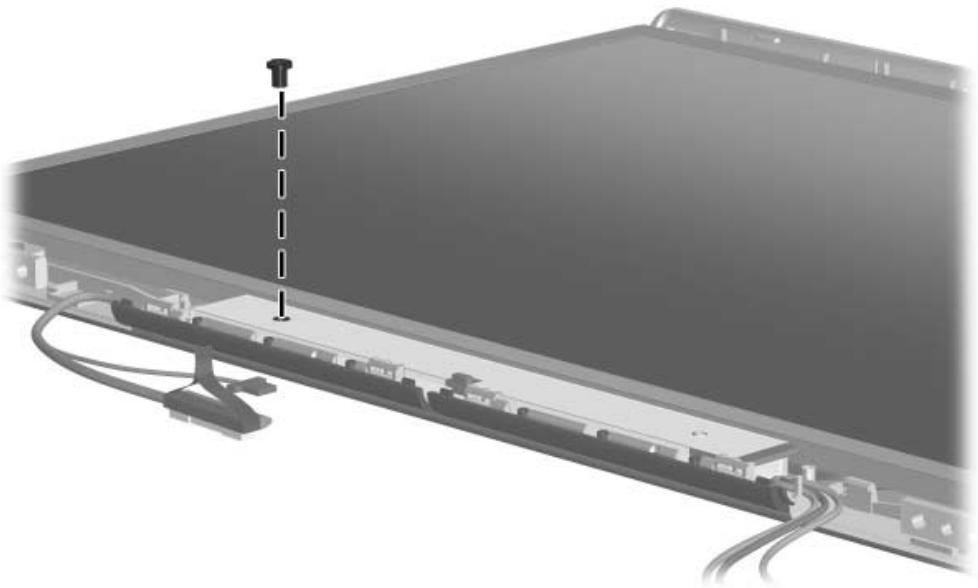

Phillips PM2.0×3.0 Screw Location

Downloaded from www.Manualslib.com manuals search engine

Table A-5

Phillips PM2.0×3.0 Screw *(Continued)*

mm	Color	Qty.	Length	Thread	Head Width
	Black	15	3.0 mm	2.0 mm	4.0 mm

Where used:

4 screws that secure the display hinges to the display assembly (documented in Section 5.11)

Phillips PM2.0×3.0 Screw Locations

Downloaded from www.Manualslib.com manuals search engine

Table A-5

Phillips PM2.0×3.0 Screw *(Continued)*

mm	Color	Qty.	Length	Thread	Head Width
	Black	15	3.0 mm	2.0 mm	4.0 mm

Where used:

4 screws that secure the wireless antenna transceivers to the display enclosure (documented in Section 5.11)

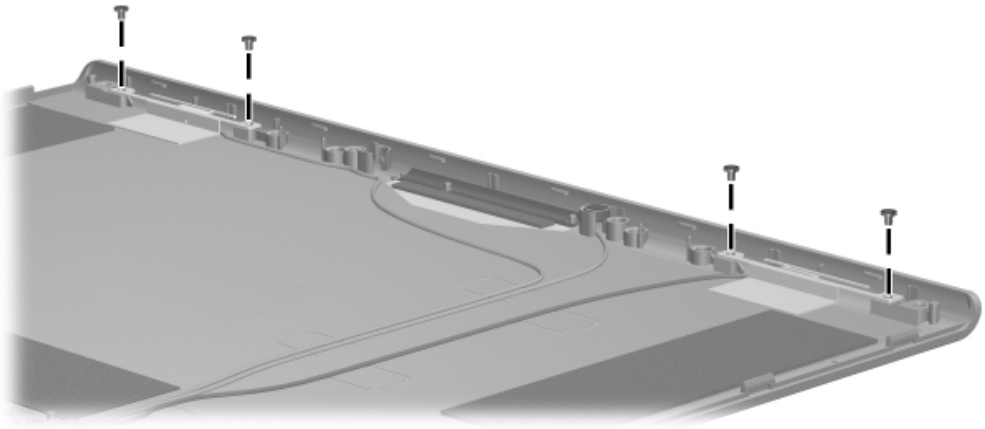

Phillips PM2.0×3.0 Screw Locations

Downloaded from www.Manualslib.com manuals search engine

Table A-5

Phillips PM2.0×3.0 Screw *(Continued)*

mm	Color	Qty.	Length	Thread	Head Width
	Black	15	3.0 mm	2.0 mm	4.0 mm

Where used:

4 screws that secure the menu control button board to the top cover (documented in Section 5.17)

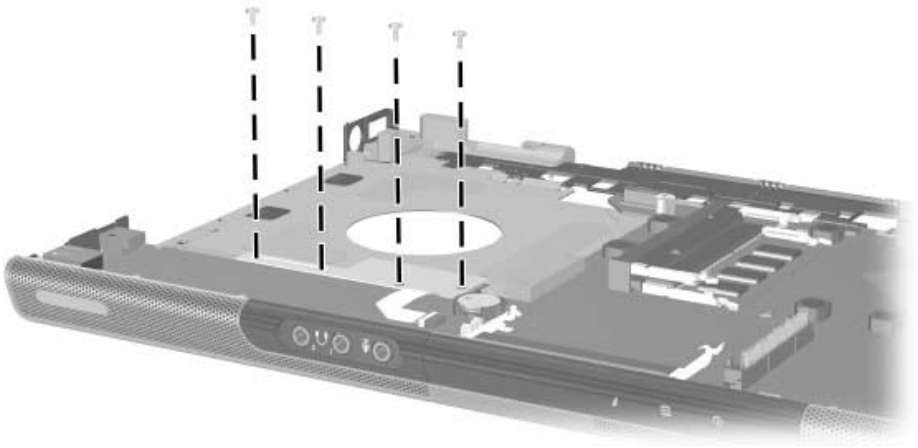

Phillips PM2.0×3.0 Screw Locations

Downloaded from www.Manualslib.com manuals search engine

Table A-6

Phillips PM2.0×7.0 Screw

mm	Color	Qty.	Length	Thread	Head Width
	Black	4	7.0 mm	2.0 mm	4.0 mm

Where used:

4 screws that secure the display assembly to the computer (documented in Section 5.11)

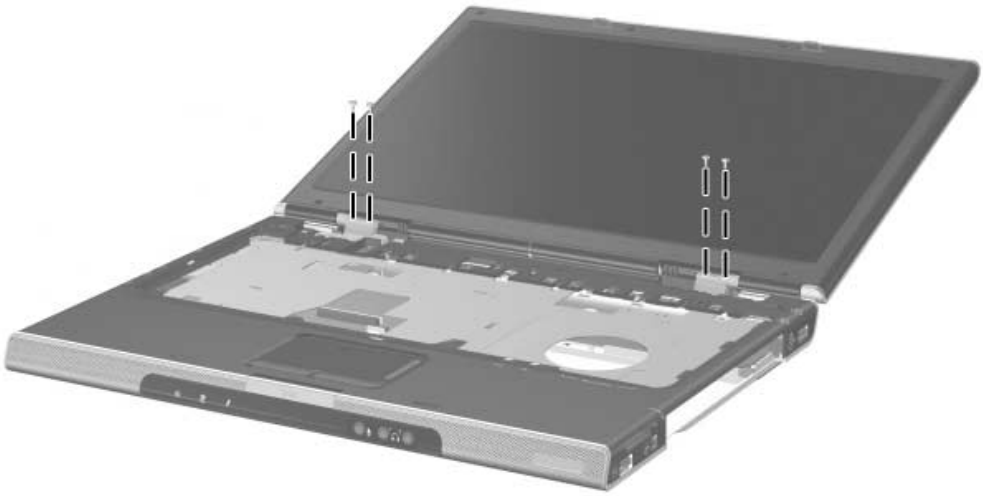

Phillips PM2.0×7.0 Screw Locations

Downloaded from www.Manualslib.com manuals search engine

Table A-7

Phillips PM1.5×3.5 Screw

mm	Color	Qty.	Length	Thread	Head Width
	Silver	2	3.5 mm	1.5 mm	3.0 mm

Where used:

2 screws that secure the Bluetooth module to the USB/S-Video board (documented in Section 5.14)

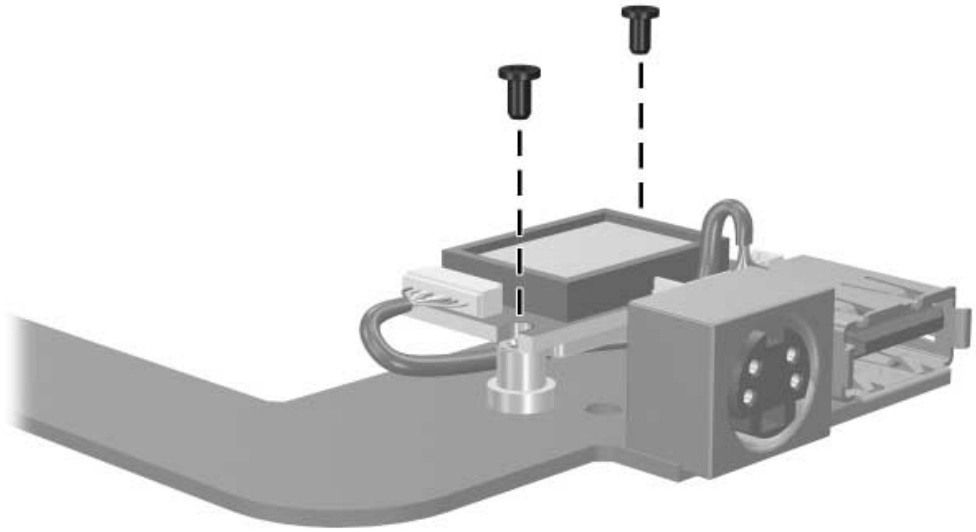

Phillips PM1.5×3.5 Screw Locations

Downloaded from www.Manualslib.com manuals search engine

Table A-8

Phillips PM1.5×2.0 Screw

mm	Color	Qty.	Length	Thread	Head Width
	Silver	3	2.0 mm	1.5 mm	6.0 mm

Where used:

3 screws that secure the LED board to the top cover (documented in Section 5.21)

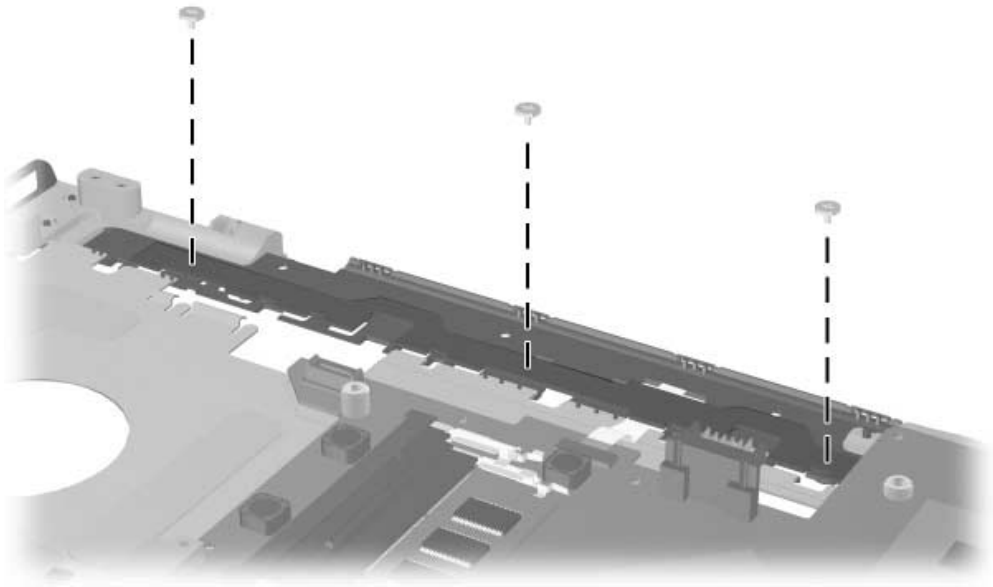

Phillips PM1.5×2.0 Screw Locations

Downloaded from www.Manualslib.com manuals search engine

Table A-9

Phillips PM2.5×6.0 Screw

mm	Color	Qty.	Length	Thread	Head Width
	Silver	16	6.0 mm	2.5 mm	5.0 mm

Where used:

2 screws that secure the Mini Card module to the computer (documented in Section 5.7)

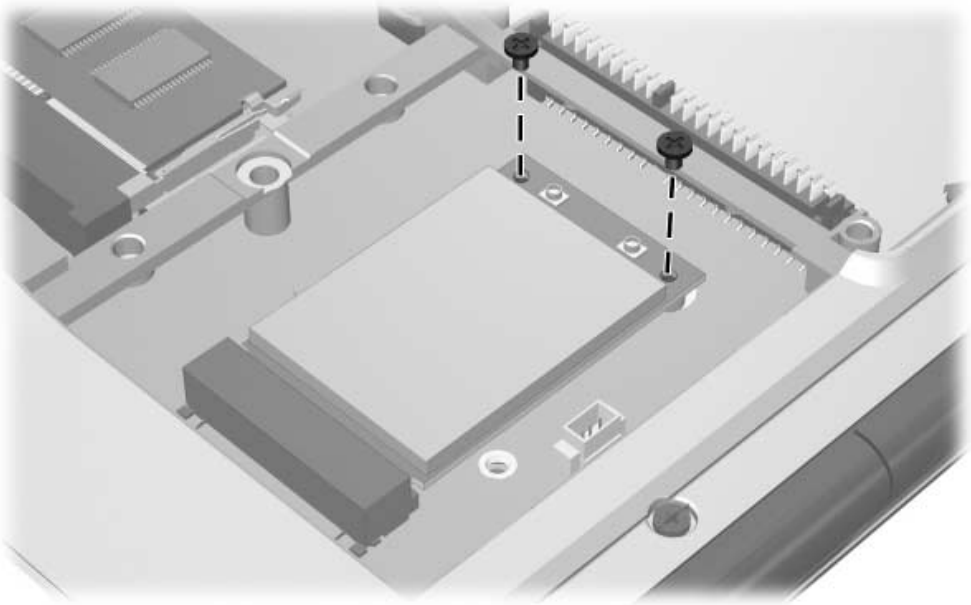

Phillips PM2.5×6.0 Screw Locations

Downloaded from www.Manualslib.com manuals search engine

Table A-9

Phillips PM2.5×6.0 Screw *(Continued)*

mm	Color	Qty.	Length	Thread	Head Width
	Silver	16	6.0 mm	2.5 mm	5.0 mm

Where used:

6 screws that secure the display bezel to the display assembly (documented in Section 5.11)

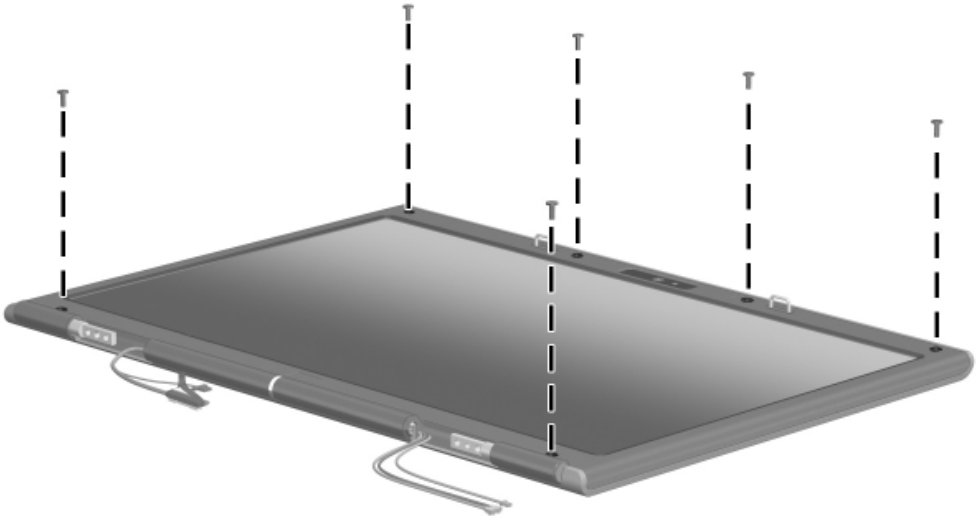

Phillips PM2.5×6.0 Screw Locations

Downloaded from www.Manualslib.com manuals search engine

Table A-9

Phillips PM2.5×6.0 Screw *(Continued)*

mm	Color	Qty.	Length	Thread	Head Width
	Silver	16	6.0 mm	2.5 mm	5.0 mm

Where used:

4 screws that secure the display release hooks to the display assembly (documented in Section 5.11)

Phillips PM2.5×6.0 Screw Locations

Downloaded from www.Manualslib.com manuals search engine

Table A-9

Phillips PM2.5×6.0 Screw *(Continued)*

mm	Color	Qty.	Length	Thread	Head Width
	Silver	16	6.0 mm	2.5 mm	5.0 mm

Where used:

4 screws that secure the display panel to the display assembly (documented in Section 5.11)

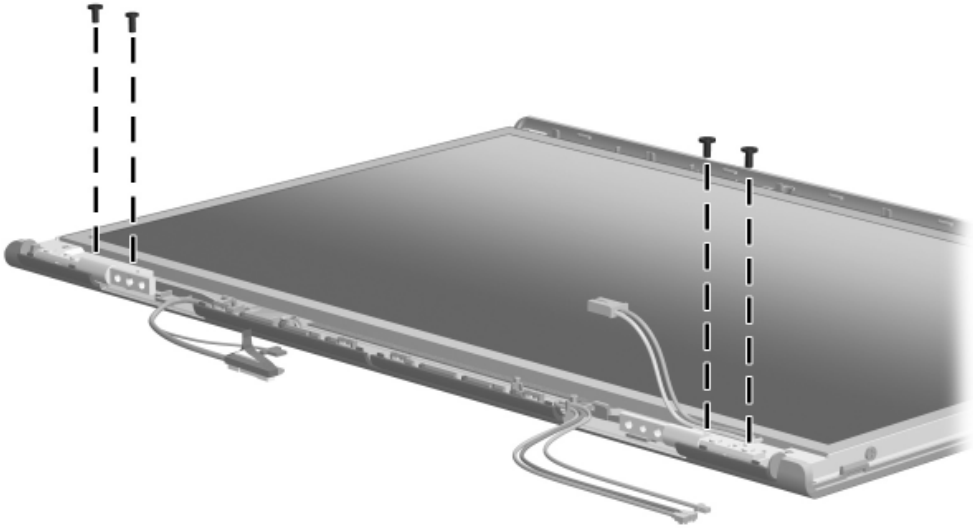

Phillips PM2.5×6.0 Screw Locations

Downloaded from www.Manualslib.com manuals search engine

Table A-10

Phillips PM2.0×2.0 Screw

mm	Color	Qty.	Length	Thread	Head Width
	Silver	2	2.0 mm	2.0 mm	4.0 mm

Where used:

2 screws that secure the ExpressCard assembly to the system board (documented in Section 5.22)

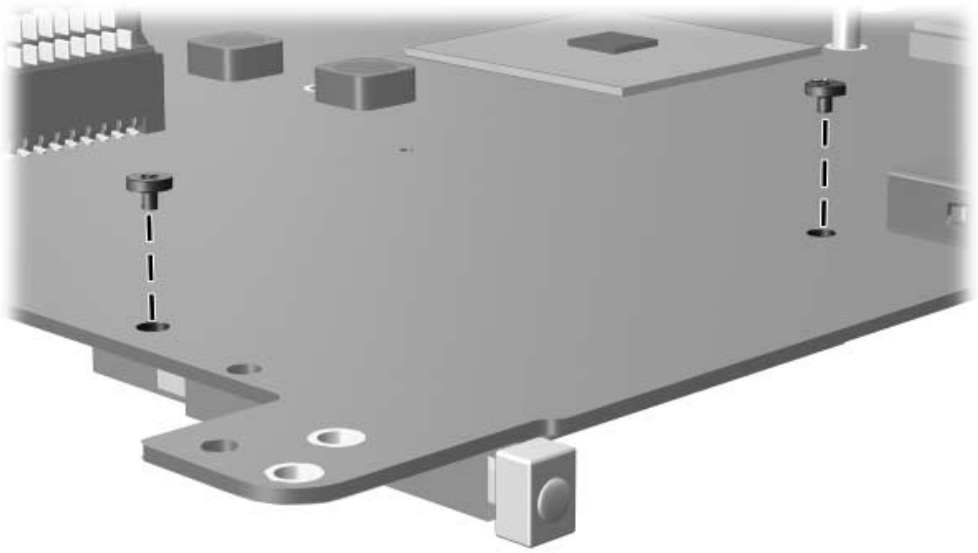

Phillips PM2.0×2.0 Screw Locations

Downloaded from www.Manualslib.com manuals search engine

B

Software Update and Recovery

Updating Software

Updated versions of the software provided with your computer may be available on the HP Web site.

Most software and BIOS updates on the HP Web site are packaged in compressed files called *SoftPaqs*.

Some download packages contain a file named Readme.txt, which contains information regarding installing and troubleshooting the file.

To update the software:

1. Identify your computer model, product category, and series or family. Prepare for a system BIOS update by identifying the BIOS version currently installed on the computer.

   If your computer is connected to a network, consult the network administrator before installing any software updates, especially system BIOS updates.

✎ The computer system BIOS is stored on the system ROM. The BIOS initializes the operating system, determines how the computer will interact with the hardware devices, and provides for data transfer among hardware devices, including the time and date.

---

2. Access the updates by visiting the HP Web site at http://www.hp.com.
3. Install the updates.

Downloaded from www.Manualslib.com manuals search engine

Updating the BIOS

To determine whether available BIOS updates contain later BIOS versions than those currently installed on the computer, you need to know the version of the system BIOS currently installed.

BIOS version information (also known as *ROM date* and *System BIOS*) can be displayed by pressing **fn+esc** (if you are already in Microsoft® Windows®) or by opening the Setup Utility.

To use the Setup Utility for displaying BIOS information:

1. Open the Setup Utility by turning on or restarting the computer, and then pressing **f10** while the "Press <F10> to enter Setup" message is displayed in the lower-left corner of the screen.
2. If the Setup Utility does not open with the system information displayed, use the arrow keys to select the **Main** menu.

   When the Main menu is selected, BIOS and other system information is displayed.
3. To exit the Setup Utility, use the arrow keys to select **Exit > Exit Discarding Changes**, and then press **enter**.

CAUTION: To prevent damage to the computer or an unsuccessful installation, download and install a BIOS update only when the computer is connected to reliable external power using the AC adapter. Do not download or install a BIOS update while the computer is running on battery power, docked in an optional docking device, or connected to an optional power source. During the download and installation, follow these instructions:

- Do not disconnect power from the computer by unplugging the power cord from the AC outlet.
- Do not shut down the computer or initiate standby or hibernation.
- Do not insert, remove, connect, or disconnect any device, cable, or cord.

Downloaded from www.Manualslib.com manuals search engine

To download a BIOS update:

1. Access the page on the HP Web site that provides software for your computer:

   Select **Start > Help and Support**, and then select the software and drivers update.

2. Follow the instructions on the screen to identify your computer and access the BIOS update you want to download.

3. At the download area:

   a. Identify the BIOS update that is later than the BIOS version currently installed on your computer. Make a note of the date, name, or other identifier. You may need this information to locate the update later, after it has been downloaded to your hard drive.

   b. Follow the instructions on the screen to download your selection to the hard drive.

   Make a note of the path to the location on your hard drive where the BIOS update will be downloaded. You will need to access this path when you are ready to install the update.

If you connect your computer to a network, consult the network administrator before installing any software updates, especially system BIOS updates.

BIOS installation procedures vary. Follow any instructions that are displayed on the screen after the download is complete. If no instructions are displayed, follow these steps:

1. Open Windows Explorer by selecting **Start > All Programs > Accessories > Windows Explorer**.

2. In the left pane of the Windows Explorer window:

   a. Click **My Computer** and then your hard drive designation. The hard drive designation is typically Local Disk (C:).

   b. Using the hard drive path you recorded earlier, open the folder on your hard drive that contains the update.

Downloaded from www.Manualslib.com manuals search engine

3. Double-click the file that has an .exe extension (for example, *filename*.exe).

   The BIOS installation begins.

4. Complete the installation by following the instructions on the screen.

After a message on the screen reports a successful installation, you can delete the downloaded file from your hard drive.

Updating Software Programs and Drivers

To download and install software other than a BIOS update:

1. Access the page on the HP Web site that provides software for your computer:

   Select **Start > Help and Support**, and then select the software and drivers update.

2. Follow the instructions on the screen to find the software you want to update.
3. At the download area, select the software you want to download and follow the instructions on the screen.

Make a note of the path to the location on your hard drive where the software will be downloaded. You will need to access this path when you are ready to install the software.

4. When the download is complete, open Windows Explorer by selecting **Start > All Programs > Accessories > Windows Explorer**.
5. In the left pane of the Windows Explorer window:
   a. Click **My Computer** and then your hard drive designation. The hard drive designation is typically Local Disk (C:).
   b. Using the hard drive path you recorded earlier, open the folder on your hard drive that contains the update.

Downloaded from www.Manualslib.com manuals search engine

6. Double-click the file that has an .exe extension (for example, *filename*.exe).

   The installation begins.

7. Complete the installation by following the instructions on the screen.

After a message on the screen reports a successful installation, you can delete the download package from your hard drive.

Recovering System Information

Tools provided by the operating system and PC Recovery software are designed to help you with the following tasks for safeguarding your information and restoring it in case of a system failure:

- Back up your information regularly to protect your important system files.
- Make a set of recovery discs (PC Recovery software feature). Recovery discs are used to start up (boot) your computer and restore the operating system and software programs to factory settings in case of system failure or instability.
- Create system restore points (operating system feature). System restore points allow you to reverse undesirable changes to your computer by restoring the computer to an earlier state.
- Recover a program or driver (PC Recovery software feature). This feature helps you reinstall a program or driver without performing a full system recovery.
- Perform a full system recovery (PC Recovery software feature). With PC Recovery, you can recover your full factory image if you experience system failure or instability. PC Recovery works from a dedicated recovery partition on the hard drive or from recovery discs you create.

Downloaded from www.Manualslib.com manuals search engine

Backing Up Your Information

When to Back Up

- On a regularly scheduled basis.

Set reminders to back up your information periodically.

- Before the computer is repaired or restored.
- Before you add or modify hardware or software.

Backup Suggestions

- Create system restore points using Windows XP Professional System Restore feature.
- Store personal files in the My Documents folder and back up these folders periodically.
- Back up templates stored in their associated programs.
- Save customized settings in a window, toolbar, or menu bar by taking a screen shot of your settings.

  The screen shot can be a time saver if you have to reset your preferences.

  To copy the screen and paste it into a Word document:

  a. Display the screen.

  b. Copy the screen:

     To copy only the active window, press **alt+fn+prt sc**.

     To copy the entire screen, press **fn+prt sc**.

  c. To paste the copied images into a document, open Word, and then select **Edit > Paste**.

Downloaded from www.Manualslib.com manuals search engine

Using System Restore Points

When you back up your system, you are creating a system restore point. A system restore point allows you to save and name a snapshot of your hard drive at a specific point in time. You can then recover back to that point if you want to reverse subsequent changes made to your system.

Recovering to an earlier restore point does not affect data files saved or e-mails created since the last restore point.

You also can create additional restore points to provide increased protection for your system files and settings.

When to Create Restore Points

- Before you add or extensively modify software or hardware.
- Periodically, whenever the system is performing optimally.

If you revert to a restore point and then change your mind, you can reverse the restoration.

Create a System Restore Point

1. Select **Start > Help and Support**, and then click **System Restore**.

   The System Restore window opens.
2. Click **Create a restore point**, and then click **Next**.
3. Follow the on-screen instructions.

Downloaded from www.Manualslib.com manuals search engine

Restore to a Previous Date and Time

To revert to a restore point (created at a previous date and time), when the computer was functioning optimally:

1. Select **Start > Help and Support**, and then click **System Restore**.

   The System Restore window opens.

2. Click **Restore my computer to an earlier time**, and then click **Next**.
3. Follow the on-screen instructions.

Creating Recovery Discs

PC Recovery Disc Creator creates a set of recovery CDs or DVDs for the computer. Use recovery discs to restore the operating system and software programs to factory settings, in case of system failure or instability.

Handle these discs carefully and keep them in a safe place. The software allows the creation of only one set of recovery discs.

Note the following guidelines before creating recovery discs:

- You will need high quality CD-R, DVD-R, or DVD+R media (purchased separately).

DVD±RW/R and double-layer DVD±RW are not compatible with the PC Recovery Disc Creator software.

- The computer must be connected to AC power during this process.
- Only one set of recovery discs can be created per computer.

Downloaded from www.Manualslib.com manuals search engine

- Number each disc before inserting it into the computer optical drive.
- If necessary, you can exit the program before you have finished creating the recovery discs. The next time you open PC Recovery Disc Creator, you will be prompted to continue the disc creation process.

To create a set of recovery discs:

1. Select **Start > All Programs > System Recovery > PC Recovery Disc Creator**.

   The PC Recovery Disc Creator tool opens.

2. Click **Next**.

If you are operating the computer on battery power, you will be prompted to connect to AC power before you can go to the next step.

3. Select the type of disc you want to use and click **Next**.

The software examines the image and displays the number of blank discs needed to create your recovery discs.

4. Insert the first disc and follow the on-screen instructions to complete the creation of the recovery discs.

Downloaded from www.Manualslib.com manuals search engine

Reinstalling Software Programs and Drivers

If a program or driver preinstalled at the factory is accidentally erased or is damaged, the Application and Driver Recovery tool allows you to reinstall it.

Software not provided with this computer must be reinstalled from the disc provided by the manufacturer or downloaded from the manufacturer's Web site.

Before reinstalling the program, be sure it is fully uninstalled.

The Application and Driver Recovery tool replaces corrupted system files and reinstalls deleted system files within the program.

- In most cases, if the program you are reinstalling is still on your computer, the reinstallation process does not affect your personal settings.
- In all cases, if a program has been deleted from your computer, the reinstallation process reinstalls the program or utility to the factory image but cannot restore your personal settings.

Reinstalling Preinstalled Programs and Drivers

1. Remove the program or driver:

In some cases, drivers are not listed in the Add or Remove Programs list. If the driver is not listed, it does not need to be removed.

   a. Select **Start > Control Panel > Add or Remove Programs**.

   b. Click the program or driver you want to remove, and then click **Change/Remove**.

Downloaded from www.Manualslib.com manuals search engine

2. Select **Start > All Programs > System Recovery > Application and Driver Recovery**.

   The Application and Driver Recovery tool opens.

3. Select **Application Installation or Driver Installation**, and then click **Next**.
4. Follow the on-screen instructions to complete the program or driver recovery.
5. Restart the computer if prompted.

Reinstalling Programs from Discs

1. Insert the disc into the optical drive.
2. When the installation wizard opens, follow the installation instructions on the screen.
3. Restart the computer if prompted.

Performing a Recovery

PC Recovery software allows you to repair or restore the system if you experience system failure or instability. PC Recovery works from recovery discs that you create or from a dedicated recovery partition on the hard drive.

Microsoft Windows XP has its own built-in repair features, such as System Restore and driver roll-back capabilities. If you have not already tried these features, try them before using PC Recovery.

PC Recovery only recovers software that was preinstalled at the factory. Software not provided with this computer must be reinstalled from the disc provided by the manufacturer or downloaded from the manufacturer's Web site.

Downloaded from www.Manualslib.com manuals search engine

Recovering from the Recovery Discs

To restore the system from the recovery discs:

1. Back up all personal files.
2. Insert the first recovery disc into the optical drive and restart the computer.
3. Follow the on-screen instructions.

Recovering from the Partition on the Hard Drive

You can perform a recovery from the partition on the hard drive from either the Start button or **f11**.

To restore the system from the partition:

1. Access the PC Recovery tool:
   - ❏ To access PC Recovery from the Start button, select **Start > All Programs > System Recovery > PC Recovery**.
   - ❏ To access PC Recovery from **f11**, restart the computer and press **f11** while the "Press <F11> for recovery" message is displayed on the screen.

     The PC Recovery tool opens.
2. Select **PC Recovery** and click **Next**.

   The computer restarts and the PC Recovery tool opens.
3. Click **OK**.
4. Follow the on-screen instructions to complete the system recovery.

   If you want to perform a *destructive* recovery:

A destructive recovery formats the hard drive and restores the computer to its factory state. Select this option only as a last resort.

Downloaded from www.Manualslib.com manuals search engine

a. Click **Advanced Options** on the System Recovery screen.

b. Select **Destructive Recovery** and follow the on-screen instructions.

Deleting the Recovery Partition on the Hard Drive

The PC Recovery Advanced Options menu provides the option of deleting the recovery partition, which will increase space on the hard drive. Delete the recovery partition only if you have already created recovery discs.

CAUTION: After you create the recovery discs, you can increase space on the hard drive by deleting the recovery partition. However, doing this is not recommended. If you delete this partition, you will lose any information that is on the partition, including the PC Recovery software. Thereafter, you must use the recovery discs to access PC Recovery software.

To delete the recovery partition:

1. If you have not already created recovery discs, create them now.
2. Select **Start > All Programs > System Recovery > PC Recovery**.

   The PC Recovery tool opens.
3. Select **PC Recovery** and click **Next**.

   The computer restarts and the PC Recovery tools opens.
4. Click **OK**.
5. At the System Recovery screen, click **Advanced Options**.
6. Select **Delete Recovery Partition (not recommended)** and follow the on-screen instructions.

Downloaded from www.Manualslib.com manuals search engine

Updating Reinstalled Software

After you perform a system recovery, connect to the Internet to update all reinstalled software.

To access update links for the operating system and other software provided on your computer:

» Select **Start > Help and Support**.

To update optional software, follow the instructions provided by the software manufacturer. Some programs include an update feature you can access from a Help button or menu within the program.

Downloaded from www.Manualslib.com manuals search engine

C

Display Component Recycling

WARNING: The backlight contains mercury. Caution should be exercised when removing and handling the backlight to avoid damaging this component and causing exposure to the mercury.

CAUTION: The procedures in this appendix can result in damage to display components. The only components intended for recycling purposes are the liquid crystal display (LCD) panel and the backlight. Careful handling should be exercised when removing these components.

Materials Disposal

This HP product contains mercury in the display assembly backlight and may require special handling at end-of-life.

Disposal of mercury may be regulated because of environmental considerations. For disposal or recycling information, contact your local authorities or visit the Electronic Industries Alliance (EIA) at http://www.eiae.org.

Downloaded from www.Manualslib.com manuals search engine

This appendix provides disassembly instructions for the display assembly. The display assembly must be disassembled to gain access to the backlight ❶ and the LCD panel ❷.

Disassembly procedures differ from one display assembly to another. The procedures provided in this appendix are general disassembly instructions. Specific details, such as screw sizes, quantities, and locations, and component shapes and sizes, can vary from one computer model to another.

Refer to Section 5.11, “Display Assembly,” for display assembly disassembly steps.

Downloaded from www.Manualslib.com manuals search engine

Perform the following steps to disassemble the display assembly:

1. Remove all screw covers ❶ and screws ❷ that secure the display bezel to the display assembly.

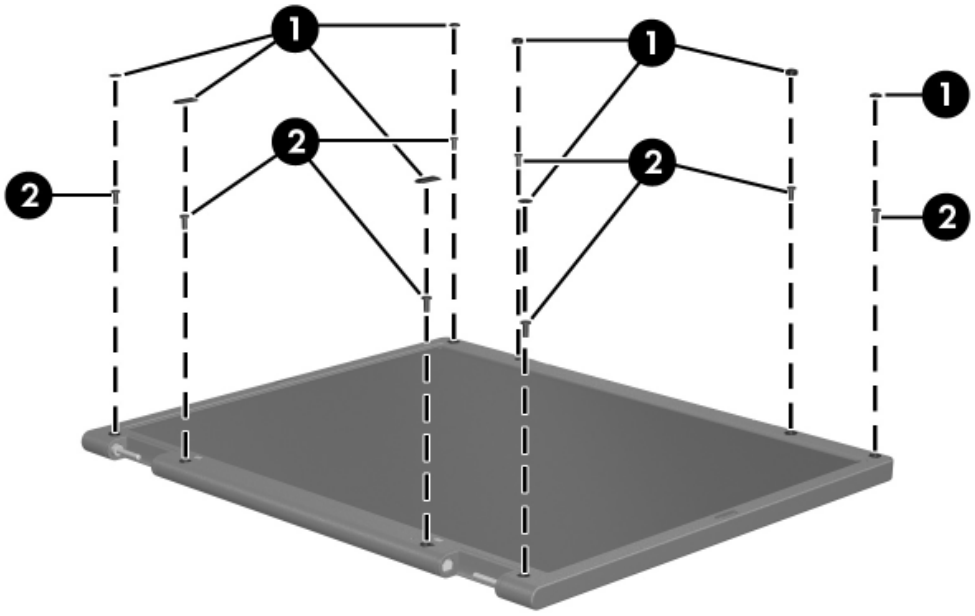

Removing the Display Bezel Screw Covers and Screws

Downloaded from www.Manualslib.com manuals search engine

2. Lift up and out on the left and right inside edges ❶ and the top and bottom inside edges ❷ of the display bezel until the bezel disengages from the display assembly.
3. Remove the display bezel ❸.

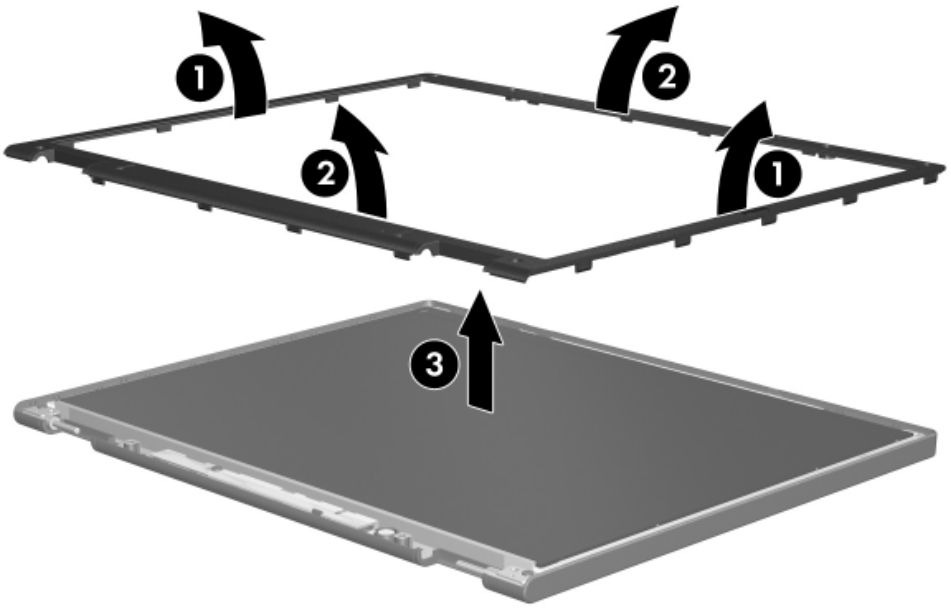

Removing the Display Bezel

Downloaded from www.Manualslib.com manuals search engine

4. Disconnect all LCD panel cables ❶ from the display inverter board and remove the inverter board ❷.

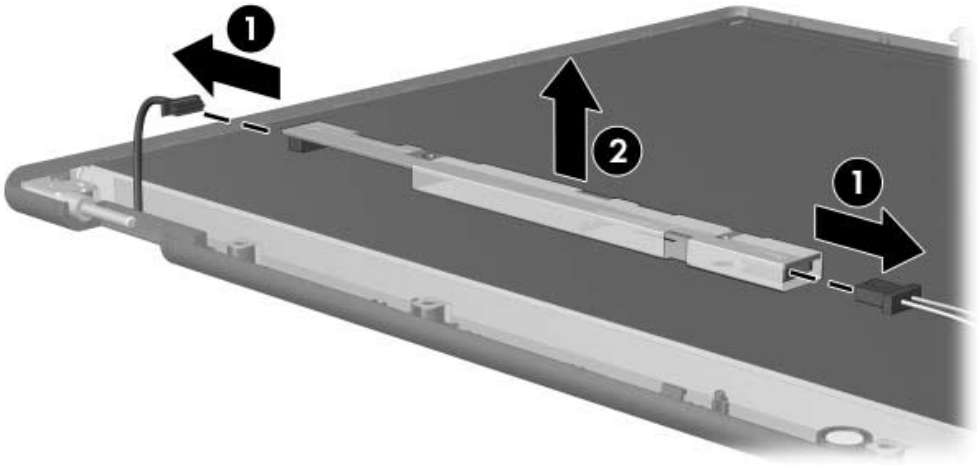

Removing the Display Inverter Board

Downloaded from www.Manualslib.com manuals search engine

5. Remove all screws ❶ that secure the LCD panel to the display enclosure.
6. Remove the LCD panel ❷ from the display enclosure.

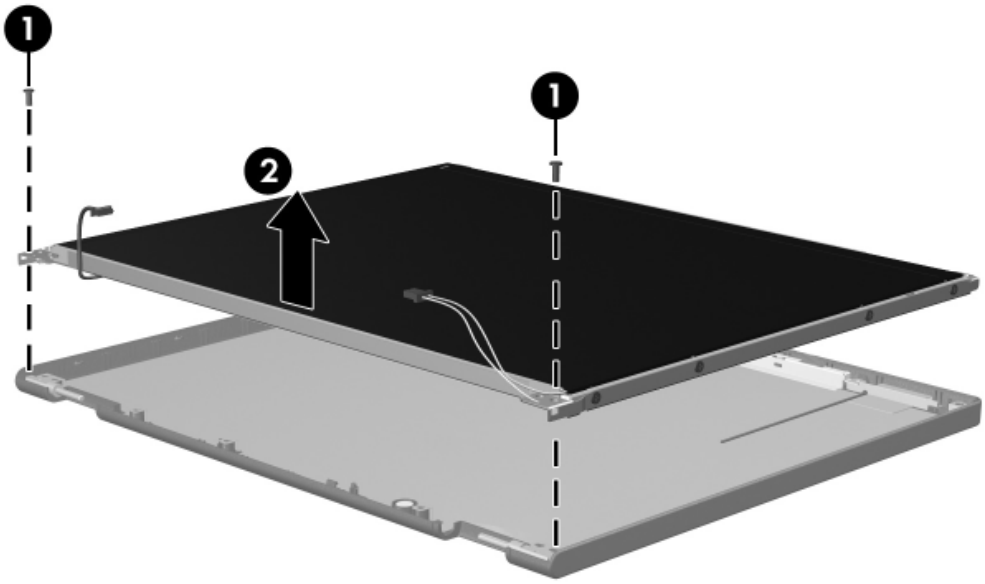

Removing the LCD Panel

Downloaded from www.Manualslib.com manuals search engine

7. Turn the LCD panel upside down.
8. Remove all screws that secure the LCD panel frame to the LCD panel.

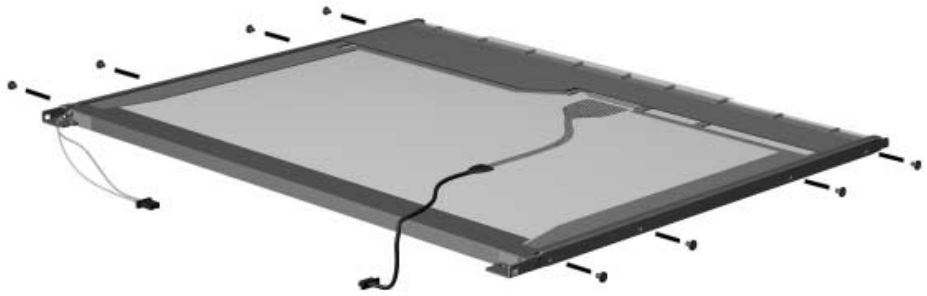

Removing the LCD Panel Frame Screws

Downloaded from www.Manualslib.com manuals search engine

9. Use a sharp-edged tool to cut the tape ❶ that secures the side of the LCD panel to the LCD panel frame.
10. Remove the LCD panel frame ❷ from the display panel.

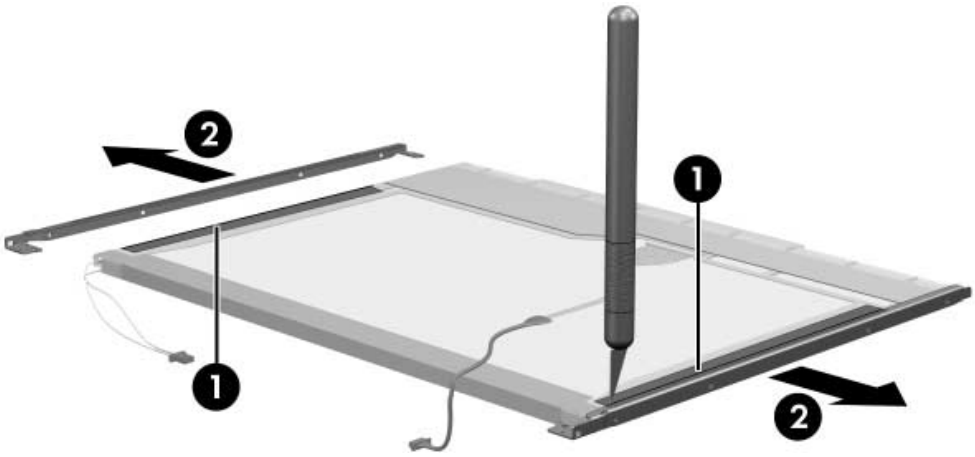

Removing the LCD Panel Frame

Downloaded from www.Manualslib.com manuals search engine

11. Remove the screws ❶ that secure the backlight cover to the LCD panel.
12. Lift the top edge of the backlight cover ❷ and swing it forward.
13. Remove the backlight cover.

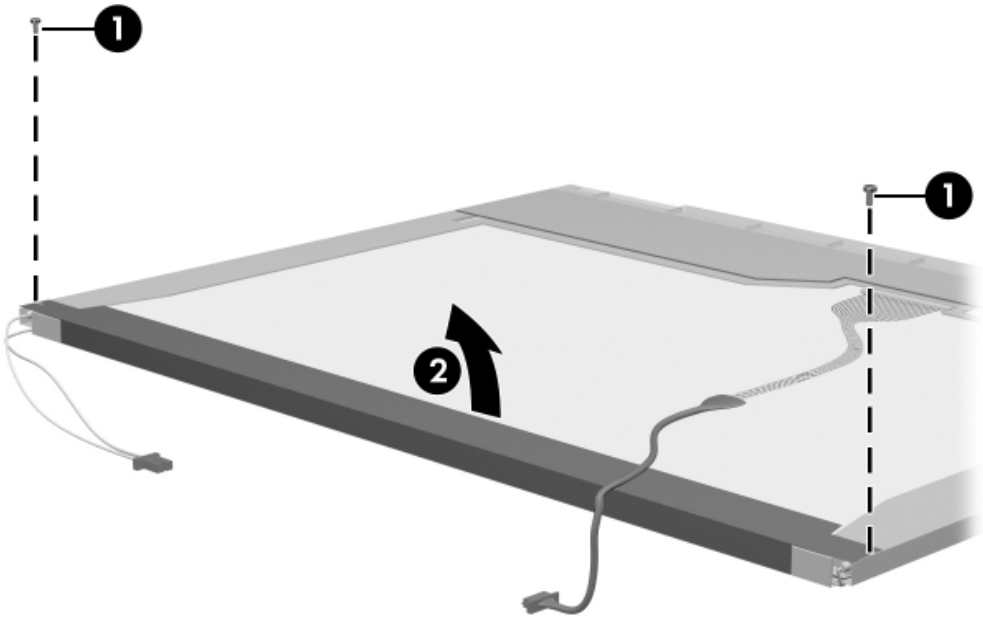

Removing the Backlight Cover

Downloaded from www.Manualslib.com manuals search engine

14. Turn the LCD panel right side up.
15. Remove the backlight cables ❶ from the clip ❷ in the LCD panel.

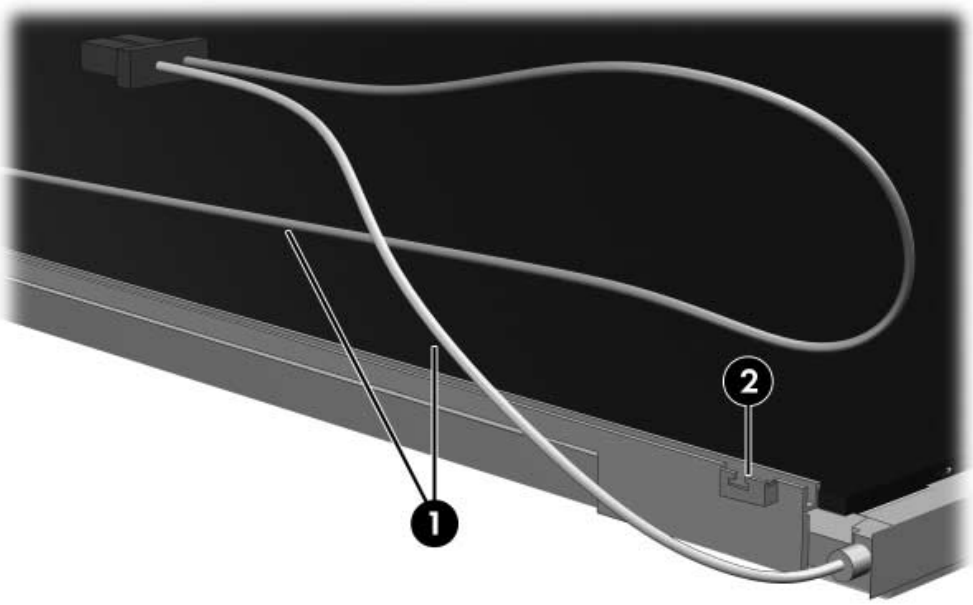

Releasing the Backlight Cables

Downloaded from www.Manualslib.com manuals search engine

16. Turn the LCD panel upside down.
17. Remove the backlight frame from the LCD panel.

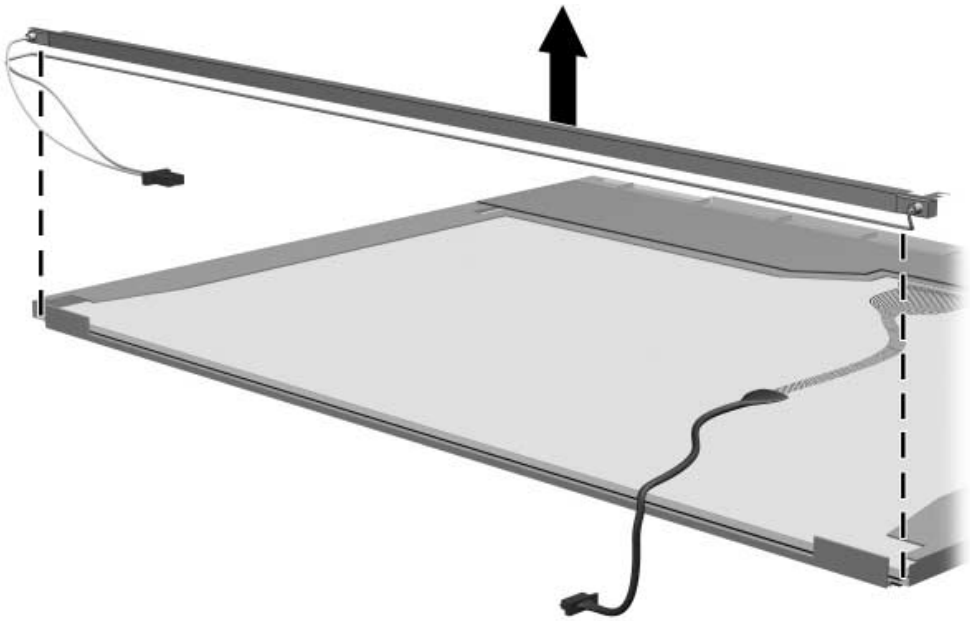

Removing the Backlight Frame

Downloaded from www.Manualslib.com manuals search engine

WARNING: The backlight contains mercury. Caution should be exercised when removing and handling the backlight to avoid damaging this component and causing exposure to the mercury.

18. Slide the backlight out of the backlight frame.

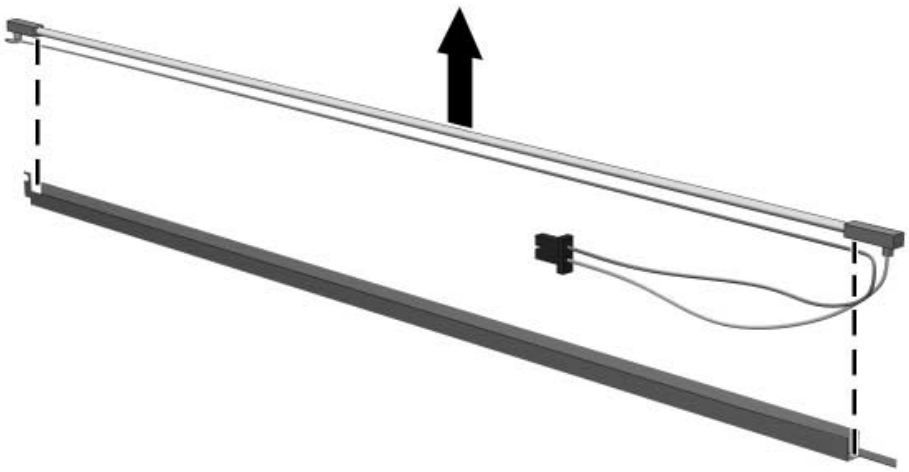

Removing the Backlight

Downloaded from www.Manualslib.com manuals search engine

19. Disconnect the display cable ❶ from the LCD panel.
20. Remove the screws ❷ that secure the LCD panel to the LCD rear panel.
21. Release the LCD panel ❸ from the LCD rear panel.
22. Release the tape ❹ that secures the LCD panel to the LCD rear panel.

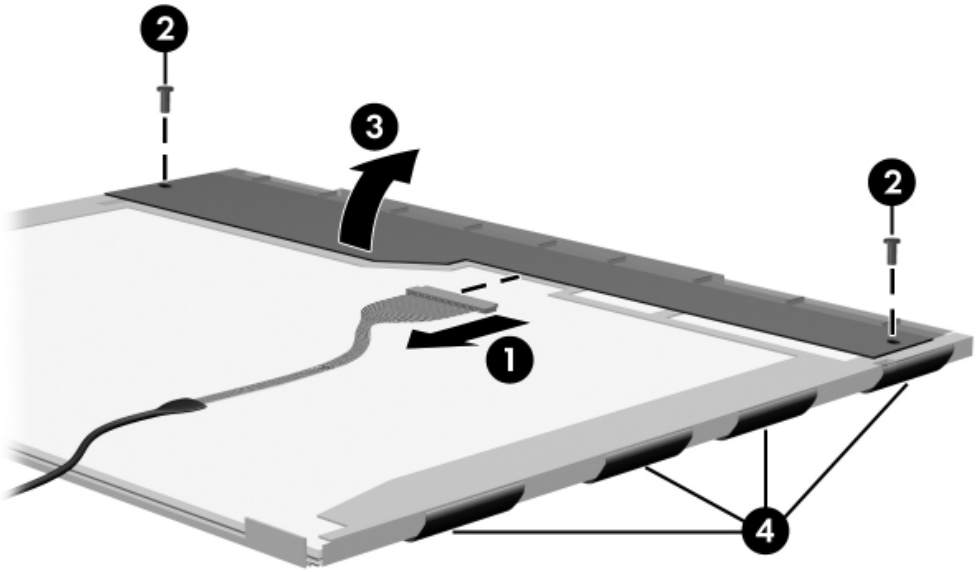

Releasing the LCD Panel

Downloaded from www.Manualslib.com manuals search engine

23. Remove the LCD panel.

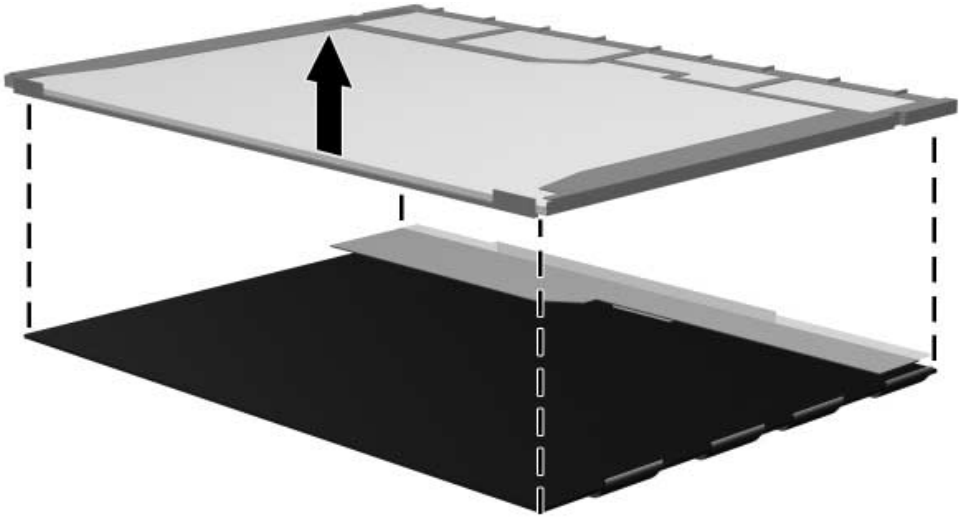

Removing the LCD Panel

24. Recycle the backlight and LCD panel.

Downloaded from www.Manualslib.com manuals search engine

D

Connector Pin Assignments

Table D-1

Universal Serial Bus

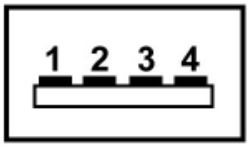

Pin	Signal	Pin	Signal
1	+5 VDC	3	Data +
2	Data –	4	Ground

Downloaded from www.Manualslib.com manuals search engine

Table D-2

RJ-45 (Network)

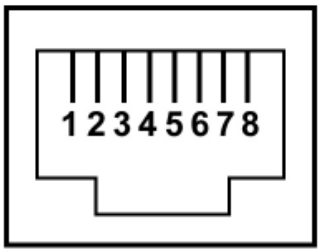

Pin	Signal	Pin	Signal
1	Transmit +	5	Unused
2	Transmit –	6	Receive –
3	Receive +	7	Unused
4	Unused	8	Unused

Downloaded from www.Manualslib.com manuals search engine

Table D-3

S-Video-Out

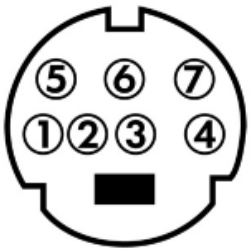

Pin	Signal	Pin	Signal
1	TV-Ground	5	TV-CD
2	TV-CVBS	6	TV-Ground
3	TV-Ground	7	TV-YD
4	TV-Ground		

Downloaded from www.Manualslib.com manuals search engine

Table D-4

External Monitor

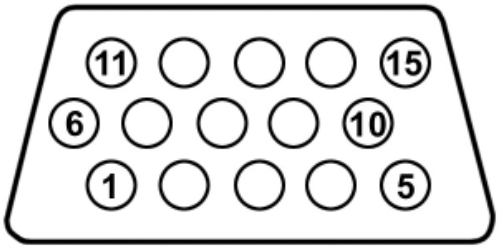

Pin	Signal	Pin	Signal
1	Red analog	9	+5 VDC
2	Green analog	10	Ground
3	Blue analog	11	Monitor detect
4	Not connected	12	DDC 2B data
5	Ground	13	Horizontal sync
6	Ground analog	14	Vertical sync
7	Ground analog	15	DDC 2B clock
8	Ground analog		

Downloaded from www.Manualslib.com manuals search engine

Table D-5

RJ-11 (Modem)

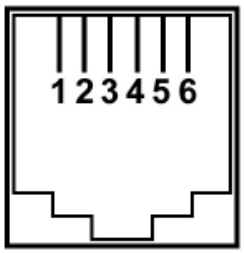

Pin	Signal	Pin	Signal
1	Unused	4	Unused
2	Tip	5	Unused
3	Ring	6	Unused

Downloaded from www.Manualslib.com manuals search engine

Table D-6

Audio-In (Microphone)

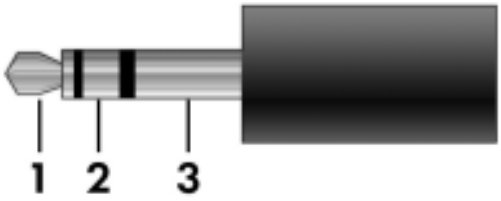

Pin	Signal	Pin	Signal
1	Audio signal in	3	Ground
2	Audio signal in		

Table D-7

Audio-Out (Headphone)

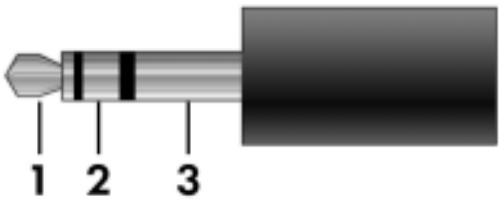

Pin	Signal	Pin	Signal
1	Audio out, left channel	3	Ground
2	Audio out, right channel		

Downloaded from www.Manualslib.com manuals search engine

E

Power Cord Set Requirements

3-Conductor Power Cord Set

The wide range input feature of the computer permits it to operate from any line voltage from 100 to 120 or 220 to 240 volts AC.

The power cord set included with the computer meets the requirements for use in the country where the equipment is purchased.

Power cord sets for use in other countries must meet the requirements of the country where the computer is used.

Downloaded from www.Manualslib.com manuals search engine

General Requirements

The requirements listed below are applicable to all countries.

- The length of the power cord set must be at least 1.5 m (5.0 ft) and a maximum of 2.0 m (6.5 ft).
- All power cord sets must be approved by an acceptable accredited agency responsible for evaluation in the country where the power cord set will be used.
- The power cord sets must have a minimum current capacity of 10 amps and a nominal voltage rating of 125 or 250 V AC, as required by each country's power system.
- The appliance coupler must meet the mechanical configuration of an EN 60 320/IEC 320 Standard Sheet C13 connector for mating with the appliance inlet on the back of the computer.

Downloaded from www.Manualslib.com manuals search engine

Country-Specific Requirements

3-Conductor Power Cord Set Requirements

Country/Region	Accredited Agency	Applicable Note Number
Australia	EANSW	1
Austria	OVE	1
Belgium	CEBC	1
Canada	CSA	2
Denmark	DEMKO	1
Finland	FIMKO	1
France	UTE	1
Germany	VDE	1
Italy	IMQ	1
Japan	METI	3

NOTES:

1. The flexible cord must be <HAR> Type HO5VV-F, 3-conductor, 1.0 mm² conductor size. Power cord set fittings (appliance coupler and wall plug) must bear the certification mark of the agency responsible for evaluation in the country where it will be used.
2. The flexible cord must be Type SPT-3 or equivalent, No. 18 AWG, 3-conductor. The wall plug must be a two-pole grounding type with a NEMA 5-15P (15 A, 125 V) or NEMA 6-15P (15 A, 250 V) configuration.
3. The appliance coupler, flexible cord, and wall plug must bear a “T” mark and registration number in accordance with the Japanese Dentori Law. The flexible cord must be Type VCT or VCTF, 3-conductor, 1.00 mm² conductor size. The wall plug must be a two-pole grounding type with a Japanese Industrial Standard C8303 (7 A, 125 V) configuration.

Downloaded from www.Manualslib.com manuals search engine

3-Conductor Power Cord Set Requirements *(Continued)*

Country/Region	Accredited Agency	Applicable Note Number
Korea	EK	4
The Netherlands	KEMA	1
Norway	NEMKO	1
People's Republic of China	CCC	5
Sweden	SEMKO	1
Switzerland	SEV	1
Taiwan	BSMI	4
United Kingdom	BSI	1
United States	UL	2

NOTES:

1. The flexible cord must be <HAR> Type HO5VV-F, 3-conductor, 1.0 mm² conductor size. Power cord set fittings (appliance coupler and wall plug) must bear the certification mark of the agency responsible for evaluation in the country where it will be used.
2. The flexible cord must be Type SPT-3 or equivalent, No. 18 AWG, 3-conductor. The wall plug must be a two-pole grounding type with a NEMA 5-15P (15 A, 125 V) or NEMA 6-15P (15 A, 250 V) configuration.
3. The appliance coupler, flexible cord, and wall plug must bear a "T" mark and registration number in accordance with the Japanese Dentori Law. The flexible cord must be Type VCT or VCTF, 3-conductor, 1.00 mm² conductor size. The wall plug must be a two-pole grounding type with a Japanese Industrial Standard C8303 (7 A, 125 V) configuration.
4. The flexible cord must be Type RVV, 3-conductor, 0.75 mm² conductor size. Power cord set fittings (appliance coupler and wall plug) must bear the certification mark of the agency responsible for evaluation in the country where it will be used.
5. The flexible cord must be Type VCTF, 3-conductor, 0.75 mm² conductor size. Power cord set fittings (appliance coupler and wall plug) must bear the certification mark of the agency responsible for evaluation in the country where it will be used.

Downloaded from www.Manualslib.com manuals search engine

Index

1394 port 1–9

A

AC adapter, spare part number 3–21, 3–24
arrow keys 1–13
audio troubleshooting 2–21
audio-in (microphone) jack
  location 1–7
  pin assignments D–6
audio-out (headphone) jack
  location 1–7
  pin assignments D–6

B

Back button 1–19
base enclosure
  removal 5–41
  spare part numbers 3–9, 3–29, 3–31, 5–41
battery
  removal 5–5
  spare part numbers 3–9, 3–24
  specifications 6–5
battery bay 1–20
battery light 1–7
battery release latch 1–20
Bluetooth module
  removal 5–48
  spare part number 3–9, 3–30, 5–48
bottom components 1–20

C

cables, service considerations 4–2
caps lock key 1–13
caps lock light 1–19
CMOS clearing 1–4
components
  bottom 1–20
  front 1–6
  keyboard 1–12
  left-side 1–10
  rear 1–10
  right-side 1–8
  top 1–14, 1–16, 1–18
computer feet
  illustrated 3–20
  locations 5–10
Computer Setup
  Advanced Menu 2–5
  Diagnostics Menu 2–4
  File Menu 2–2

Downloaded from www.Manualslib.com manuals search engine

overview 2–1
Security Menu 2–3
computer specifications 6–1
connector pin assignments
external monitor D–4
headphone D–6
microphone D–6
monitor D–4
RJ-11 (modem) D–5
RJ-45 (network) D–2
S-Video-out D–3
Universal Serial Bus (USB) D–1
connectors, service considerations 4–2

D

design overview 1–22
Digital Media Slot 1–9
Digital Media Slot light 1–9
disassembly sequence chart 5–3
diskette drive
OS loading problems 2–19
display assembly
removal 5–28
spare part numbers 3–3, 3–26, 3–32, 5–28
specifications 6–3
display bezel
removal 5–33
spare part numbers 3–16, 5–33
display cable, spare part numbers 3–17
display enclosure, spare part numbers 3–17, 5–33
display hinge
removal 5–38
spare part number 3–27, 5–38
Display Hinge Kit, spare part number 3–17
display inverter
removal 5–36
spare part number 3–17, 5–36
display panel
removal 5–37
spare part numbers 3–17, 3–30, 5–37
display release button 1–7
display release hook, removal 5–35
Display Screw Kit, spare part number 3–31
display switch 1–14
drive light 1–7
drives, preventing damage 4–3
DVD button 1–15
DVD/CD-RW Combo Drive
precautions 4–3
removal 5–18
spare part number 3–15, 3–19, 3–28, 5–18
specifications 6–6
DVD±RW/R and CD-RW Double-Layer Combo Drive
precautions 4–3
removal 5–18

Downloaded from www.Manualslib.com manuals search engine

spare part number 3–15, 3–19, 3–28, 3–30, 3–31, 5–18
specifications 6–8

E

electrostatic discharge 4–4, 4–8
exhaust vents 1–11, 1–21
expansion port 2 1–11
expansion product
troubleshooting 2–14
ExpressCard assembly
removal 5–70
spare part number 3–7, 3–26, 5–70
ExpressCard slot 1–11
ExpressCard slot bezel, illustrated 3–20
external monitor port
location 1–11
pin assignments D–4

F

f1 to **f12** keys 1–13
fan/heat sink assembly
removal 5–57
spare part number 3–7, 3–30, 5–57
features 1–2
feet
illustrated 3–20
locations 5–10
flowcharts, troubleshooting
no audio 2–21, 2–22
no network/modem connection 2–26
no OS loading 2–15
no OS loading from diskette drive 2–19
no OS loading from hard drive 2–16, 2–17, 2–18
no OS loading from optical drive 2–20
no power 2–8, 2–10, 2–11
no video 2–12, 2–13
nonfunctioning device 2–23
nonfunctioning docking device 2–14
nonfunctioning keyboard 2–24
nonfunctioning pointing device 2–25
fn key 1–13
front components 1–6

G

grounding equipment and methods 4–7

H

hard drive
OS loading problems 2–16
precautions 4–3
removal 5–6
spare part numbers 3–11, 3–19, 3–28, 5–6
specifications 6–4
hard drive bay 1–21
hard drive cover
illustrated 3–20
removal 5–7

Downloaded from www.Manualslib.com manuals search engine

headphone jack
location 1–7
pin assignments D–6
headset, spare part number 3–21, 3–23
HP backpack, spare part number 3–24
HP Mobile Remote Control, spare part number 3–21, 3–24
HP xc2000 Notebook All-in-One Media Cable, spare part number 3–21, 3–24

I

I/O address specifications 6–13
interrupt specifications 6–11

K

keyboard
removal 5–24
spare part numbers 3–5, 3–28, 3–29, 5–24
troubleshooting 2–24
keyboard components 1–12
keypad keys 1–13

L

label area 1–21
LED board
removal 5–68
spare part number 3–5, 3–30, 5–68
left-side components 1–10
Logo Kit, spare part number 3–21, 3–30

M

mass storage devices, spare part numbers 3–18
Media button 1–15
memory module
removal 5–11
spare part numbers 3–15, 3–27, 3–28, 5–11
memory module compartment 1–21
memory module compartment cover
illustrated 3–20
removal 5–12
menu control button board
removal 5–54
spare part number 3–9, 3–30, 5–54
microphone jack
location 1–7
pin assignments D–6
microphone, removal 5–40
Mini Card compartment 1–21
Mini Card compartment cover
illustrated 3–20
removal 5–16
Mini Card module
removal 5–14
spare part numbers 3–11, 3–13, 3–24, 3–25, 5–14
modem jack
location 1–11
pin assignments D–5
modem module, troubleshooting 2–26

Downloaded from www.Manualslib.com manuals search engine

monitor port
location 1–11
pin assignments D–4
mouse, spare part number 3–21, 3–23

N

network jack
location 1–11
pin assignments D–2
network, troubleshooting 2–26
Next/Fast Forward button 1–17
nonfunctioning device, troubleshooting 2–14, 2–23
num lock key 1–13
num lock light 1–19

O

OK button 1–19
optical drive
location 1–9, 1–20
OS loading problems 2–20
precautions 4–3
removal 5–18
spare part numbers 3–15, 3–19, 5–18
specifications 6–8

P

packing precautions 4–5
password clearing 1–4
plastic parts 4–2
Plastics Kit
contents 3–20
spare part numbers 3–7, 3–20, 3–30, 3–31
Play/Pause button, location 1–15
pointing device, troubleshooting 2–25
power button 1–14
power button light 1–19
power connector 1–11
power cord
set requirements E–2
spare part numbers 3–22, 3–23, 3–24
power light 1–7
power management features 1–5
power, troubleshooting 2–8
Previous/Rewind button 1–15
processor
removal 5–59
spare part numbers 3–7, 3–26, 3–31, 3–32, 5–59

R

rear components 1–10
removal
preliminaries 4–1
procedures 5–1
replacement
preliminaries 4–1
procedures 5–1
right-side components 1–8
RJ-11 (modem) jack
location 1–11
pin assignments D–5
RJ-45 (network) jack
location 1–11
pin assignments D–2

Downloaded from www.Manualslib.com manuals search engine

RTC battery
removal 5–52
spare part number 3–9, 3–30, 5–52
Rubber Feet Kit, spare part number 3–9, 3–30

S

screw kit
spare part numbers 3–21, 3–30
screw listing A–1
SD Memory Card, spare part number 3–15, 3–24
security cable slot 1–11
serial number 3–1, 5–2
service considerations 4–2
speaker assembly
removal 5–50
spare part number 3–9, 3–30, 5–50
speakers 1–7
specifications
battery 6–5
computer 6–1
display 6–3
DVD/CD-RW Combo Drive 6–6
DVD±RW/R and CD-RW Double-Layer Combo Drive 6–8
hard drive 6–4
I/O addresses 6–13
interrupts 6–11
optical drive 6–8
system DMA 6–10
static shielding materials 4–8
Stop button 1–17
S-Video-out jack
location 1–9
pin assignments D–3
switch cover
removal 5–21
spare part numbers 3–3, 3–30, 3–31, 5–21
system board
removal 5–61
spare part numbers 3–7, 3–9, 3–26, 3–31, 5–61
system DMA 6–10

T

tools required 4–1
top components 1–14, 1–16, 1–18
top cover, spare part numbers 3–5, 3–29, 3–31
TouchPad 1–19
TouchPad buttons 1–19
TouchPad light 1–19
TouchPad on/off button 1–19
TouchPad vertical scroll region 1–19
transporting precautions 4–5
troubleshooting
audio 2–21
Computer Setup 2–1
expansion product 2–14
flowcharts 2–6
keyboard 2–24
modem 2–26
network 2–26

Downloaded from www.Manualslib.com manuals search engine

nonfunctioning device 2–14, 2–23
OS loading 2–15
overview 2–1
pointing device 2–25
power 2–8
video 2–12

U

Universal Serial Bus (USB) connector
location 1–9, 1–11
pin assignments D–1
unknown password 1–4
USB camera cable, spare part number 3–16, 5–34
USB digital drive, spare part number 3–19, 3–23
USB travel mouse, spare part number 3–21, 3–23
USB/S-Video board
removal 5–46
spare part number 3–9, 3–30, 5–46

V

video troubleshooting 2–12
volume buttons 1–17

W

Web camera board
removal 5–34
spare part number 3–16, 5–34
Windows applications key 1–13
Windows logo key 1–13
wireless button 1–17
wireless light 1–11, 1–19
workstation precautions 4–6

Downloaded from www.Manualslib.com manuals search engine