UNITED STATES PATENT AND TRADEMARK OFFICE

BEFORE THE PATENT TRIAL AND APPEAL BOARD

GENEOSCOPY, INC.,
Petitioner,

v.

EXACT SCIENCES CORPORATION,
Patent Owner.

Case No.: IPR2024-00459
U.S. Patent 11,634,781

DECLARATION OF DUNCAN WHITNEY, Ph.D.

TABLE OF CONTENTS

I. Introduction 1

II. Qualifications and Experience 2

III. The Person of Ordinary Skill in the Art 5

IV. Technical Background 6

A. Diagnostic Analysis of Biological Samples 7

1. Diagnostic Tests Based on Detection of Biomarkers, such as Protein and DNA 9

2. Sensitivity and Specificity as Measures of Diagnostic Performance 12

3. Diagnostic Tests Commonly Measure Multiple Markers 13

4. Diagnostic Analyses Require Well-Preserved Samples 15

B. Use of Fecal Diagnostic Tests to Diagnose Colorectal Cancer 23

1. Fecal Occult Blood Tests 23

2. Fecal DNA-Based Tests 27

3. RNA Expression was also used to Diagnose Colorectal Cancer 32

C. Biomarker Panels Empower Broader and Earlier Detection of Colorectal Cancer 33

1. Panels of Different Fecal DNA biomarkers 33

2. Panels Combining FOBT and DNA Biomarkers 34

D. Home Collection of Fecal Samples 38

1. Collecting and Partitioning Stool Samples 39

2. Different Buffers were Used to Preserve Different Biomarkers in Fecal Samples 48

3. Partitioning Samples into Multiple Vessels for Stabilization during Shipment 53

V. Legal Standards 56

VI. The Challenged Patent 59

A. The ’781 Patent 59

B. Summary of the Claimed Subject Matter 64

VII. SUMMARY OF SELECTED PRIOR ART REFERENCES 69

A. Lenhard (EX1004) 69

B. Vilkin (EX1005) 74

C. Itzkowitz (EX1006) 79

D. Kanaoka (EX1007) 84

E. Derks (EX1008) 86

F. Shuber (EX1009) 88

VIII. OVERVIEW OF GROUNDS OF UNPATENTABILITY 91

IX. THE CLAIMS OF THE ’781 PATENT ARE OBVIOUS 92

A. Lenhard in view of Itzkowitz and Vilkin renders claims 1-9, 11, and 14-20 obvious 92

1. A POSA would be motivated to use the iFOBT of Vilkin in place of the gFOBT of Lenhard 94

2. A POSA would have been motivated to use the sample collection methodology of Itzkowitz in Lenhard’s process 98

3. A POSA would have been motivated to use the DNA stabilizing buffer of Itzkowitz in Lenhard’s process ... 100

4. Claim 1 104

5. Claim 2: "The method of claim 1, further comprising delivering the sealable container containing the removed portion of the fecal sample and said buffer and the sealable collection vessel containing the remaining portion of the fecal sample and said stabilizing buffer to a medical diagnostics laboratory" 115

6. Claim 3 116

7. Claim 4: "The method of claim 3, wherein testing the nucleic acid comprises determining expression from a human gene." 121

8. Claim 5: "The method of claim 4, wherein determining expression from the human gene comprises testing the nucleic acid for the presence of human DNA having an epigenetic modification."..... 123

9. Claim 6: "The method of claim 5, wherein testing the nucleic acid for the presence of human DNA having an epigenetic modification comprises measuring an amount of a methylated human DNA."..... 124

10. Claim 7: "The method of claim 5, wherein the epigenetic modification comprises aberrant methylation."..... 125

11. Claim 8: "The method of claim 7, wherein the aberrant methylation comprises hypermethylation" 126

12. Claim 9: "The method of claim 7, wherein the human DNA having an epigenetic modification comprises a gene and/or a promoter region of a gene." 126

13. Claim 11: "The method of claim 5, wherein testing the nucleic acid for presence of human DNA having an epigenetic modification comprises modifying the nucleic acid with bisulfate ions under conditions wherein unmethylated cytosine is converted to uracil..... 127

14. Claim 14: "The method of claim 3, wherein testing for an amount of blood protein in the removed portion comprises testing for a concentration of hemoglobin in the removed portion." 128

15. Claim 15: "The method of claim 14, wherein the testing for the concentration of hemoglobin comprises immunochemical detection of hemoglobin." 129

16. Claims 16-20: "The method of claim 14, wherein the removed portion of the fecal sample is considered positive for the presence of blood when the concentration of hemoglobin detected in the removed portion is at least [5, 10, 20, 50, or 200] ng/ml." 129

B. Lenhard in view of Itzkowitz and Vilkin, in further view of Kanaoka renders obvious claims 12 and 13 132

1. Claim 12: "The method of claim 4, wherein determining expression from the human gene comprises measuring an amount of RNA expressed from the gene." 132

2. Claim 13: "The method of claim 12, wherein measuring an amount of RNA expressed from the gene comprises reverse transcriptase polymerase chain reaction (RT-PCR) 135

C. Lenhard in view of Itzkowitz and Vilkin, in further view of Derks renders obvious claim 10 136

D. Shuber and Vilkin render obvious claims 1-9, 11, and 14-20 137

1. Claim 1 143

2. Claim 2: "The method of claim 1, further comprising delivering the sealable container containing the removed portion of the fecal sample and said buffer and the sealable collection vessel containing the remaining portion of the fecal sample and said stablizing buffer to a medical diagnostics laboratory" 150

3. Claim 3 152

4. Claim 4: "The method of claim 3, wherein testing the nucleic acid comprises determining expression from a human gene." 155

5. Claim 5: "The method of claim 4, wherein determining expression from the human gene comprises testing the

nucleic acid for the presence of human DNA having an epigenetic modification." 156

6. Claim 6: "The method of claim 5, wherein testing the nucleic acid for the presence of human DNA having an epigenetic modification comprises measuring an amount of a methylated human DNA." 157

7. Claim 7: "The method of claim 5, wherein the epigenetic modification comprises aberrant methylation." 157

8. Claim 8: "The method of claim 7, wherein the aberrant methylation comprises hypermethylation." 158

9. Claim 9: "The method of claim 7, wherein the human DNA having an epigenetic modification comprises a gene and/or a promoter region of a gene." 158

10. Claim 11: "The method of claim 5, wherein testing the nucleic acid for presence of human DNA having an epigenetic modification comprises modifying the nucleic acid with bisulfate ions under conditions wherein unmethylated cytosine is converted to uracil..... 159

11. Claim 14: "The method of claim 3, wherein testing for an amount of blood protein in the removed portion comprises testing for a concentration of hemoglobin in the removed portion." 160

12. Claim 15: "The method of claim 14, wherein the testing for the concentration of hemoglobin comprises immunochemical detection of hemoglobin." 161

13. Claims 16-20: "The method of claim 14, wherein the removed portion of the fecal sample is considered positive for the presence of blood when the concentration of hemoglobin detected in the removed portion is at least [5, 10, 20, 50, or 200] ng/ml." 161

E. Shuber and Vilkin, in view of Kanaoka render obvious claims 12 and 13 164

1. Claim 12 "The method of claim 4, wherein determining expression from the human gene comprises measuring an amount of RNA expressed from the gene." 164

2. Claim 13: "The method of claim 12, wherein measuring an amount of RNA expressed from the gene comprises reverse transcriptase polymerase chain reaction (RT-PCR) 167

F. Shuber and Vilkin, in view of Derks render obvious claim 10167

X. SECONDARY CONSIDERATIONS OF NON-OBVIOUSNESS 168

XI. CONCLUSION.....169

APPENDIX A: LIST OF EXHIBITS 171

I. Introduction

1. I have been asked by counsel for Geneoscopy, Inc. ("Geneoscopy") to offer my opinions as to whether the claims of U.S. Patent No. 11,634,781 (EX1001; the "'781 patent") would have been obvious to the person of ordinary skill in the art ("POSA") as of February 3, 2009, which I understand is the earliest priority date claimed by the '781 patent.

2. I understand that my opinions in this Declaration will be submitted as evidence in an *inter partes* review ("IPR") proceeding before the Patent Trial & Appeal Board in the U.S. Patent & Trademark Office concerning the '781 patent. I understand Geneoscopy is the Petitioner in this proceeding and that Exact Sciences Corporation ("Exact") is the Patent Owner.

3. I am being compensated at my usual rate of $400 per hour plus expenses for my work in connection with this IPR proceeding. My compensation in no way depends on the outcome of this proceeding or on the opinions I express. The opinions and conclusions I express herein are based on my review of the materials cited herein, as well as on (1) my general knowledge of clinical diagnostic tests, including stool-based diagnostic tests and sample handling processes, and (2) my years of experience acquired working in this field. I reserve the right to supplement

or amend my opinions in response to opinions expressed by other experts, or in light of any additional evidence, testimony, or other information that may be provided to me after that date of this declaration.

II. Qualifications and Experience

1. My current Curriculum Vitae is attached as EX1003. I have summarized my educational and professional background below.

2. I received a B.A. in Chemistry from Colby College in 1981, and a Ph.D. in Materials Sciences and Engineering from Massachusetts Institute of Technology in 1987. My research advisor was Professor Gary Wnek.

3. I have held leadership positions in several companies developing clinical diagnostics tests, with multiple responsibilities including clinical trial design; conception of strategic research plans and specific research approaches to address clinical unmet needs; scoping of analytical and clinical experiments and data-generation plans, including review and interpretation of data; recruiting, training and management of research staff; and working with other functional areas to gain regulatory and reimbursement approvals as part of the test commercialization process. I have authored or co-authored multiple peer-reviewed publications associated with this work.

4. My current position is Chief Scientific Officer (CSO) of Gregor Diagnostics (Madison, WI), since February of 2022. The company focuses on development of improved clinical diagnostics tests for risk-management of patients with prostate cancer. The company's research has included recruitment of patients in a multicenter study to collect specimens and clinical data, which have been used to discover novel biomarkers using various DNA and RNA-based sequencing methodologies. Prior to 2022, I held the position of Vice President (VP) of Early Detection, within the Lung Cancer Initiative at Johnson & Johnson (Boston, MA and New Brunswick, NJ) for 3 years, leading research and clinical studies to advance ways to diagnose and manage subjects with lung cancer.

5. I held the position of VP of Research & Development (R&D) at Allegro Diagnostics Corp. (Boston, MA) for 5 years. The goal of the company was to develop novel diagnostics for pulmonary diseases, including lung cancer. I led research programs to discover gene-expression biomarkers from subjects at risk of lung cancer. A trial was completed recruiting approximately 2000 subjects with indeterminate bronchoscopy procedures, where normal-appearing bronchial epithelial cells were collected, RNA was isolated, and the RNA was then profiled using microarrays. Regression analysis of top genes, found to be differentially

expressed between subjects with and without cancer was validated and published in top-tier, peer-reviewed journals, and was ultimately commercialized as a clinical diagnostic test by Veracyte, Inc.

6. I was involved in the sale of the company Allegro to Veracyte, Inc. (South San Francisco, CA), which then hired me as VP of Discovery R&D. In addition to completing studies to demonstrate analytical and clinical validity of the lung cancer diagnostic test, initially developed by Allegro, I also led a team to develop a second-generation thyroid cancer diagnostic test using an RNA-sequencing methodology.

7. My initial professional experience developing clinical diagnostics was at Exact Sciences Corporation, where I was employed for 5 years (2000-2005). I was initially hired as the Director of Technology Development in the R&D group focusing on developing and optimizing methods for isolation of human DNA from stool samples. I was subsequently promoted to VP of Technology Development.

8. I have authored 23 peer-reviewed publications spanning my work conducted as part of my professional experiences. This includes five publications from studies conducted while I was employed at Exact, focused on stabilization of stool samples and recovery of human DNA from them for non-invasive detection of colorectal cancer ("CRC"), and development of

CRC detection tests and technologies. I am also a named inventor on numerous patents and patent applications, some of which originate from studies I conducted while employed at Exact that focused on methods to improve recovery of DNA from stool samples for applications in non-invasive detection of CRC.

III. The Person of Ordinary Skill in the Art

9. I have been informed that the person of ordinary skill in the art ("POSA") is a hypothetical person who is presumed to have known all of the relevant art as of the priority date of the '781 patent and is the person to whom the subject matter of the Challenged Patents is directed.

10. I have been asked to opine as to the qualifications of the POSA to which the claims of the '781 patent are directed. For the purpose of rendering an opinion on this question, I have further been instructed to assume that the priority date of the '781 patent to be February 3, 2009 (the "Priority Date").

11. I have been informed that factors that may be considered in determining the level of ordinary skill may include: (1) the educational level of the inventor; (2) the type of problems encountered in the art; (3) prior art solutions to those problems; (4) the rapidity with which innovations are made; (5) the sophistication of the technology; and (6) the educational level

of active workers in the field. I have further been informed that the POSA may possess the education, skills, and experience of multiple actual people who would work together as a team to solve a problem in the field.

12. In my opinion, a POSA relevant to the ’781 Patent would have a Ph.D. in chemistry, biochemistry, biology, or a related field and at least five years of experience designing and performing diagnostic assays on fecal samples.

IV. Technical Background

13. The disputed technology in this matter relates to the collection of human clinical specimens and recovery of informative biomarkers from fecal specimens for use in the diagnosis of disease, particularly the diagnosis of CRC.

14. The claims of the ’781 patent concern a method of processing a fecal sample, wherein the sample is collected at home and divided in two portions: a removed portion that is combined with a buffer that prevents denaturation or degradation of blood proteins, and a remaining portion that is combined with a stabilizing buffer. The removed portion can be tested for the presence of a blood protein, like hemoglobin. The remaining portion can be analyzed for a nucleic acid, such as methylated DNA.

15. Processing fecal samples for detection of blood proteins and nucleic acids was routine in the art well before the Priority Date. As I explain below in section IV(B), fecal tests for detecting blood protein and nucleic acids as recited in the '781 patent claims were known and routine well before the Priority Date. Moreover, as I explain in sections IV(C) and IV(D), below, separating a fecal sample so that it can be tested both for blood proteins and for nucleic acids had been reported throughout the prior art. The method claimed by the '781 patent amounts to no more than the routine use of standard methods to prepare a fecal sample for performance of well-established, complementary diagnostic assays.

A. Diagnostic Analysis of Biological Samples

16. Diagnostic testing has long been a basic tenet of modern medicine. For many diseases, timely diagnosis can be a prerequisite to effective treatment. In the absence of accurate and convenient diagnostic methods, many otherwise curable diseases can remain life-threatening due to shortfalls in detection. Further, early detection of a disease, such as CRC, can result in its diagnosis at an earlier (and more treatable) stage, resulting in reduced mortality.

17. Disease diagnosis is often based on the analysis of analytes originating from the affected cells or tissue to distinguish afflicted

individuals from healthy ones. For example, in the diagnosis of colon cancer, procedures such as colonoscopy or sigmoidoscopy allow the sampling of suspicious looking tissue directly from the colon. The tissue is then examined to determine the presence of abnormal-appearing cells associated with malignancy, stage, and cell-type associated with a cancer diagnosis and prognosis. Alternatively, it may be determined that no abnormal cells are present. Also, it may be determined that abnormal cells may be present that are associated with pre-malignant lesions, such as adenomas. The process of directly sampling tissue from human subjects is typically considered to be invasive.

18. Various non-invasive diagnostic methods have also been developed. Non-invasive diagnostic testing involves procedures that do not break the skin or physically enter the body.

19. Some common non-invasive diagnostic methods use imaging techniques (such as MRI, X-ray, ultrasound, etc.) to observe targeted tissues. These methods can be effective, but also have limited resolution which depends on the imaging technique. For instance, X-rays typically are only able to detect lesions (such as tumors) that are at least a few millimeters in diameter, and therefore may miss small and early-stage cancers.

20. Other non-invasive techniques involve collection of bodily fluids or other extruded bodily samples, such a fecal samples, which can be analyzed for the presence of disease indicators (sometimes called "biomarkers"). The goal of such approaches, in general, is to retrieve and detect in the extruded sample either diseased cells, or analytes originating from diseased cells.

21. Diagnostics based on bodily samples, such as fecal samples, can be particularly attractive because they are non-invasive and relatively convenient, particularly when compared to invasive alternatives like colonoscopy or sigmoidoscopy. Diagnostic tests that analyze bodily samples therefore contribute to treatment efficiency and can improve patient experience and increase patient compliance by reducing the need for invasive testing.

1. Diagnostic Tests Based on Detection of Biomarkers, such as Protein and DNA

22. Many non-invasive diagnostic tests provide medical information by detecting and/or measuring disease-associated biomarkers in patient samples. When applied to cancer diagnosis, non-invasive detection methods may involve analysis of cancer cells using methods either to directly examine such cells, or methods to extract analytes from the cells that are specifically associated with disease. For instance, PAP smear procedures

are designed to detect cervical cancer by taking a swab of the cervix to collect cells and directly examine them to detect the presence of abnormal-appearing cells. Methods have also been developed to non-invasively detect or monitor cancer in the body by collecting circulating cancerous cells in the blood stream using, for example, immunoaffinity-capture. These methods are often referred to as a form of liquid biopsy. Direct enumeration of these cells can be indicative of cancer. In other approaches, DNA is extracted from these cells, which can be analyzed for cancer-associated mutations. These tests are often used in detection or monitoring of breast, prostate, and colorectal cancers. Other forms of liquid biopsy tests involve directly isolating and analyzing nucleic acids originating from cancerous cells in the blood stream.

23. In other cases, it may be sufficient to directly isolate analytes associated with cancerous cells without first isolating the cells themselves. There are multiple examples of these kinds of approaches, where analytes are collected from a variety of bodily fluids. These range from single analytes, such as the measurement of prostate-specific antigen (PSA) in blood, to more complex analyses, such as DNA-mutation analysis in multiple genes in DNA recovered from stool samples.

24. Biomarkers used in non-invasive diagnostics include proteins, nucleic acids (e.g., DNA or RNA), and chemical metabolites. Scientists have been identifying useful biomarkers and developing non-invasive diagnostic tests based on such biomarkers for over a century. For example, in 1841 a scientist named Karl Trommer developed a diagnostic test for diabetes which involved subjecting a patient's urine sample to acid hydrolysis. Fecal hemoglobin protein levels were associated with bowel cancer by 1901, and a diversity of diagnostic tests measuring hemoglobin protein levels in feces were developed during the first part of the 1900s.[1] More sophisticated occult hemoglobin assays were in widespread clinical use for diagnosis of CRC by the 1970s.[2]

25. With the advent of more modern molecular biology techniques in the 1980s, DNA-based biomarkers began to be used with increasing frequency. For example, fecal testing for DNA-containing mutations associated with cancer has been used for the diagnosis of CRC since at least 1992.[3]

---

[1] Simon (EX1033) p.822.

[2] *Id.* p. 823.

[3] Sidransky (EX1035).

26. By the early 2000s, fecal diagnostics based on epigenetic markers associated with cancer had been developed. Epigenetics refers to changes to DNA that do not alter its sequence of bases but affect whether genes encoded by the DNA are expressed. One type of epigenetic modification that has been used in fecal CRC diagnostics is DNA methylation. In DNA methylation, a methyl group is added to certain cytosine bases in DNA. When the DNA in a gene or its promoter is methylated it tends to prevent that gene from being expressed. Methylation of certain genes and their promotors are associated with CRC, and detection of such methylated sequences has been used in CRC diagnostics since at least 2004.[4]

2. Sensitivity and Specificity as Measures of Diagnostic Performance

27. Sensitivity and specificity are important metrics of diagnostic assay performance.

28. Sensitivity refers to the frequency at which a diagnostic test successfully detects disease in subjects (the true positive rate). A false-negative result refers to subjects with disease that are not detected by the diagnostic test. Thus, a test with high sensitivity will produce few false-

[4] Müller (EX1037); Schuebel (EX1038); Shen (EX1039).

negative results. Having a high sensitivity is particularly important in fecal CRC tests, where the consequence of false-negative results is that CRC patients do not receive needed cancer treatment, leading to a worse prognosis and potentially death.

29. Specificity refers to the frequency at which the test result is negative in subjects without disease (the true negative rate). A false-positive result refers to subjects without disease that are indicated as having the disease by the diagnostic test. Thus, a test with high specificity will produce few false-positive results (i.e., patients who incorrectly test positive who do not have the disease being tested for). Having a high specificity is desirable in fecal CRC tests, because patients who wrongly test positive are often subjected to an unnecessary medical procedures and potentially unnecessary treatment.

3. Diagnostic Tests Commonly Measure Multiple Markers

30. Effective diagnostic tests must be sensitive and specific for the disease of interest. In the case of cancer diagnostics, the disease itself may be polyclonal within individuals, meaning that there may be different cell populations with aberrant malignant growth, which in turn are driven by distinct molecular pathways. The presence and/or level of a particular biomarker in a patient's samples may also vary over time. Across a

population of affected individuals, the presence of multiple disease pathways within a certain cancer type will be even more pronounced. The impact of this non-homogeneity is that measurement of different biomarkers may be required for detection of the same disease in different individuals, or in the same individual tested at different times.

31. Testing for multiple biomarkers in the same test will therefore often increase that test's sensitivity. For example, if a given biomarker can be detected in 40% of diseased subjects, that alone may not be sufficient to be an effective diagnostic test. However, if a second biomarker is also detectable in 40% of disease subjects, and there is incomplete overlap in the individuals detected using the two analytes, then the overall detection sensitivity of the assay will be higher when both analytes are detected as compared to when each analyte is detected individually. This approach can be extended to include more than two biomarkers.

32. For this reason, by the Priority Date, diagnostic tests, including fecal tests, frequently included the detection of multiple biomarkers. As explained above, it was well understood by scientists that detecting multiple biomarkers in combination can improve the sensitivity and/or specificity of a diagnostic assay, including detection of CRC. By the Priority Date, numerous tests had been developed that combined multiple genetic markers,

or even combined diverse types of markers, such as DNA analysis and occult blood testing.[5]

33. Typically, when tests utilize different types of biomarkers (e.g., DNA sequences and occult blood protein), samples, or portions of samples, must be processed separately. This is because different types of biomarkers are preserved in different buffers and processed using different reagents and/or instruments.[6] For example, several researchers tested stool samples for fecal DNA and fecal occult blood, using reagents from unrelated kits for the two distinct tests.[7]

4. Diagnostic Analyses Require Well-Preserved Samples

34. When a sample is obtained somewhere other than a diagnostic laboratory, such as by a patient at their home, steps are often taken to preserve specimens during transport and/or storage to increase the chances of recovering sufficient quantities of biomarkers for analysis. The quantity

---

[5] Tagore (EX1040) p. 1229; Kutzner (EX1012) Abstract; Lenhard (EX1004); Rennert (EX1045); Itzkowitz (EX1006).

[6] Shuber (EX1009); Vilkin (EX1005); Itzkowitz (EX1006); Grow (EX1042).

[7] Lenhard (EX1004); Imperiale (EX1043); Ahlquist 2008 (EX1044); Rennert (EX1045).

of biomarker recovered is often limiting and may impact the clinical sensitivity of a test (i.e., the number of subjects with detectable biomarkers). For example, in stool samples, the majority of DNA originates from bacterial cells in the gut, and the proportion of human DNA corresponding to cancerous cells is typically a very small portion of the total human DNA recovered. Therefore, preservation of analytes corresponding to cancer is extremely important.

35. If precautions are not taken to preserve specimens, most analytes in the specimen will degrade. The degree of degradation depends on the time, temperature, presence of other elements that may co-exist in the specimen environment, and whether or not the specimen has been treated with material (e.g., in a buffer) that inhibit analyte degradation.

36. For instance, naturally occurring nucleases are enzymes that cleave the chains of nucleotides of nucleic acids into smaller units. Nucleases can be specific to DNA (referred to as DNAses), or to RNA (referred to as RNAses). Endonuclease activity cleaves nucleic acids in well-defined locations of DNA and RNA, based on specific nucleotide sequences, and leads to short, well-defined fragment lengths. Alternatively, exonucleases operate by continuously cleaving the terminal nucleotide on nucleic acid chains to leave shorter and shorter fragments. Both types of

nucleases can lead to fragments that are too short to be detected using, for example, polymerase chain reaction (PCR).

37. Degradation of nucleic acids independent of nucleases can also occur due to random chain scission from thermal energy. In this case, DNA tends to be more stable than RNA due to the double-stranded configuration of native DNA in cells, whereas RNA occurs as single-stranded entities. However, at elevated temperatures, or over extended periods of time both DNA and RNA can become heavily degraded. RNA is well-known to degrade very rapidly even in ambient conditions, and elevated temperatures lead to even more rapid chain scission and generation of small nucleotide sequences.

38. Similarly, naturally occurring proteases can act on protein analytes to cleave polypeptides chains and denature proteins. Denaturation can also occur from storage of samples for extended periods of time at ambient, or elevated temperatures. Detection methods that rely on intact, functional proteins will be negatively impacted by any denaturation of protein analytes. Other immunochemical detection methods are based on the concept of using antibodies that recognize protein biomarkers. But denaturation of biomarker proteins, and cleavage of polypeptide chains, either by the action of proteases, or the random scission from thermal

energy, can destroy the protein sequences recognized by antibodies. This leads to loss of detection signal.

39. Loss of detection signal of any biomarker (nucleic acid or protein) leads to increased false-negative test results and loss of diagnostic test sensitivity.

40. One way to improve compliance of non-invasive testing and facilitate getting appropriate subjects tested is to design the test so patients do not need to visit medical centers for clinical sample collection. Many diagnostic tests require specialized equipment or expertise to perform. Samples for such tests therefore must be transported to a testing center or laboratory for analyses. In this process, sample preservation of the relevant biomarker(s) in the sample is paramount. The results of an analytical test depend upon the quality of the test sample. However, as explained above, biological samples are subject to change over time, often including degradation of a biomarker of interest. Preservative reagents and handling (e.g., reducing the time from collection to analysis) are therefore essential for successful testing home-collected samples that must be analyzed at a clinical laboratory.

41. As of the Priority Date, one method of minimizing degradation of nucleic acids and proteins in samples was to freeze them. Freezing

samples minimizes the action of nucleases, and proteases, as well as the random scission due to thermal energy. Freezing clinical specimens using dry ice (-78˚C) and retaining them in -80˚C freezers is commonly done in the laboratory environment for long-term storage. Under these conditions samples may be stored for days to years, increasing the likelihood that sufficient quantities of DNA and RNA or proteins are recovered from the stored sample for subsequent analysis. In some cases, samples can also be frozen and shipped with dry ice to reduce degradation during transport to a lab for analysis. However, patients often do not have ready access to dry ice. What is more, sublimation of dry ice occurs over time, and shipping with dry ice is typically only reliable over 24-48 hours. Thus, while relying on frozen samples for transport can be effective in certain circumstances, it has several disadvantages, including the lack of dry ice availability to most patients, shipping containers that provide ineffective insulation, the higher costs of rapid shipping services, and the risk of shipping delays.

42. Scientists therefore developed alternative methods that minimize degradation of analytes without freezing. Two relevant methods known in use as of the Priority Date were to desiccate samples, or to mix samples with stabilization buffers or solutions. There is prior art that

describes both techniques in the context of using fecal samples for detection of CRC.

43. Desiccation often involves small samples that can be easily and rapidly dried, often on a card or other flat surface. Desiccation minimizes the action of nucleases and proteases, which normally operate in solution. Desiccation also minimizes random scission of nucleic acids due to minimization of vibrational activity when in solution. The goal of developing effective stabilization buffers is to minimize the activity of nucleases and proteases. Many of these enzymes derive their activity by recruiting divalent cations to catalyze chain scission reactions. However, use of desiccation for stabilization can take time, is only practically available for very small quantities of sample, and desiccated samples can be incompatible with certain types of assays.

44. Many common stabilization buffers for deactivating biomarker-degrading enzymes are based on ethylene diamine tetra acetic acid (EDTA), which acts by chelating the divalent cations, rendering the enzymes inactive. The concentration of EDTA required to minimize enzyme-based degradation of biomarkers will vary depending on the nature of the biomarker and sample type. Experiments to optimize sample stabilization therefore often are needed to tailor the stabilization buffer to the type of biomarker being

analyzed, the type of sample, and how the sample is anticipated to be collected, shipped, and stored.

45. Optimization of the composition of the buffers, including the concentration of ingredients, such as EDTA, is therefore necessary to ensure that biomarkers in samples remain intact when the samples are shipped after at-home collection to a diagnostic laboratory where the specimen can be further processed and tested. For instance, if standard shipping services can reliably ensure that samples can be returned to a testing lab within 3 days, then buffer optimization must be done to ensure that stability of the analyte to be tested over that period of time under temperature conditions typically anticipated.

46. There are several benefits of preserving samples without having to freeze them. Specimens can be easily mixed with stabilization buffers in appropriate containers immediately after they are collected. This avoids the cost and potential inconvenience of having to supply liquid-nitrogen or dry-ice. This, in turn, enables non-invasive collection of specimens from subjects at home, as opposed to requiring subjects to visit a clinic or medical center for specimen collection. Stabilization buffers can often be prepared inexpensively and in large quantities. Once a volume and composition of buffer appropriate for the specimen quantity is established, kits including

that buffer can be standardized for collection from all patients. Stabilization buffers themselves can be stored under ambient conditions for extended periods of time without loss in activity, unlike cold-storage agents, such as dry-ice, which sublimates within 24-48 hours and therefore must be replenished over time.

47. The optimal stabilization strategy used will depend, in part, on the nature of the biomarker being tested (e.g., protein biomarkers versus DNA biomarkers). As such, when different types of biomarkers are being tested in a diagnostic assay, it is often desirable to partition a sample into separate portions prior to shipment. In this way, each portion can be preserved using a stabilization buffer that has been optimized to stabilize the biomarker for which that portion is being tested.

48. Thus, while lab-collected samples can be frozen to slow sample degradation, freezing is an inconvenient, unreliable and expensive stabilization method for home-collected samples that are shipped to a laboratory for testing. Accordingly, shipping samples preserved in reagents that prevent biomarker degradation without the need to freeze the sample, (e.g., in the presence of an appropriate stabilizing buffer), is greatly preferred to the shipment of frozen samples.

B. Use of Fecal Diagnostic Tests to Diagnose Colorectal Cancer

49. By February 3, 2009, it was well-established that biomarkers associated with CRC could be found in stool. In general, stool-based diagnostic methods involved obtaining a stool sample from a patient and testing it for one or more such biomarkers. Stool analysis was an efficient tool for identifying patients at heightened risk of CRC, without the initial need for resource-heavy, invasive diagnostics, such as colonoscopy. By identifying patients likely to have CRC, stool analyses allowed medical practitioners to focus resources and attention on the patients at greatest risk. For these reasons, researchers and clinicians had developed and were optimizing biomarker combinations to optimize the sensitivity and specificity of stool analysis.[8] By February 3, 2009, a variety of protein and nucleic acid biomarkers detectable in stool were known to be diagnostic of CRC.

1. Fecal Occult Blood Tests

50. Blood proteins are present in the stool of individuals with CRC because CRC results in polyps and lesions that may bleed into the fecal

[8] *E.g.*, Young 2004 (EX1069), Lenhard (EX1004), Itzkowitz (EX1006), Kutzner (EX1012), Rennert (EX1045), Karl (EX1047).

stream. Many early diagnostic tests for CRC were based on the detection of small amounts of blood in a patient's stool. The fecal blood used to diagnose CRC is referred to as "occult" because it is typically not readily detectable when the stool is examined by the naked eye. Fecal occult blood testing ("FOBT") was perhaps the first established non-invasive stool test to screen subjects for CRC and remains a central feature of many diagnostic protocols for this disease.[9] Sensitivity and specificity of FOBTs can be impacted by numerous factors. For example, some colonic lesions do not bleed detectably into stool, or bleed intermittently, while there are also other non-cancerous conditions that can cause blood in stool, such as ulcerative colitis.[10]

51. Early FOBTs were based on a well-established chemical reaction between heme and guaiac (a compound traditionally isolated from the wood resin of Guaiacum trees), and are referred to as "gFOBTs".[11] Heme catalyzes oxidation of guaiac, which causes a visible change in its color. Hydrogen peroxide facilitates the oxidation process. The Hemoccult® slide

---

[9] *See* Simon (EX1033) p. 822

[10] White (EX1051) p. 298; Mahon (EX1068) p. 22; Tagore (EX1040). p. 1226; Beaulieu (EX1075) 1:43-47.

[11] Simon (EX1033) pp. 822-823; Ostrow (EX1048) p. 489.

test (Smith-Kline Diagnostics), available since the 1970's, was a commonly used gFOBT.[12] In the Hemoccult® test, a guaiac-coated test paper is contacted with a stool sample and a hydrogen peroxide solution, where oxidation of guaiac yields a blue color indicative of occult blood.[13] One drawback is that guaiac also reacts with common dietary elements that also have peroxidase activity, such as plant peroxidases and heme from consumed red meat. Consequently, accurate testing using gFOBT requires a patient to restrict their dietary intake in advance of the test.[14] Due to the stability of heme, guaiac tests were also sensitive to bleeding throughout the gastrointestinal tract, e.g., from the stomach, which can result in false positive results.[15] In addition, guaiac tests were generally regarded as having poor sensitivity.[16]

---

[12] *Id.*

[13] *Id.*

[14] Young 2007 (EX1024) pp. 28-29; Ostrow (EX1048) pp. 489-490; Cleator (EX1049) 1:9-37; Kahi (EX1050) p. 385.

[15] *Id.*

[16] *Id.*

52. Other FOBTs, first developed in the 1980s, were based on the detection of human hemoglobin in stool using antibodies, and are therefore referred to as immunochemical fecal occult blood tests (iFOBT, sometimes also referred to as fecal immunochemical tests, or FIT).[17] In iFOBTs, the antibodies used are typically specific for human hemoglobin, eliminating the necessity of dietary restrictions.[18] Because the hemoglobin detected by iFOBTs is rapidly digested in stomach and small intestine, iFOBTs are more selective for occult bleeding of colorectal origin than gFOBTs.[19] iFOBTs were generally more sensitive than their guaiac predecessors.[20] As an additional advantage, iFOBTs could be automated and produce quantitative results, allowing physicians to select an optimal threshold hemoglobin level, above which they arrange for their patient to undergo a colonoscopy.[21]

---

[17] Simon (EX1033) pp. 822-823; Ostrow (EX1048) p. 489.

[18] *Id.*

[19] *Id.*

[20] Young 2007 (EX1024) p. 29, Cleator (EX1049) 1:46-57, Kahi (EX1050) p. 385.

[21] Young 2007 (EX1024) p. 30; Vilkin (EX1005) pp. 2519-2520.

2. Fecal DNA-Based Tests

53. Cancer cells and cellular debris are also exfoliated into the fecal stream of patients with CRC, allowing detection of cancer-specific nucleic acid markers in the stool of such individuals that are not found in the stool of healthy subjects.[22] Accumulation of nucleic acid changes is central to the development of CRC.[23] Each of these changes has the potential to serve as a nucleic acid biomarker if it appears more frequently in CRC cells than in healthy cells. CRC-associated DNA could be distinguished from normal DNA in several different ways. Nucleic acid biomarkers that had been used to detect CRC in fecal samples by the Priority Date include DNA sequence mutations, long DNA fragments, epigenetic DNA modifications (e.g., methylation), and changes in RNA expression.[24]

54. Fecal DNA biomarkers useful for diagnosing CRC have been known since the 1990s. Early studies found that fecal DNA often contained

---

[22] Young 2007 (EX1024) p. 27.

[23] White (EX1051) p. 297.

[24] Lenhard (EX1004); Olson (EX1025); Müller (EX1037); Zou (EX1052); Eguchi (EX1053); Itzkowitz (EX1006), Tagore (EX1040); Kutzner (EX1012).

mutations in oncogenes that were associated with CRC, such as APC, K-RAS and p53.[25] Because these cancer-associated mutations are more likely to be present in exfoliated CRC cells than in normal cells, they can serve as biomarkers for CRC and be detected in fecal DNA to identify patients with CRC.

55. Another genetic marker in stool DNA comes from dying colonocytes, which enter the fecal stream when they are sloughed from healthy tissue or cancerous tissue.[26] In healthy individuals, the dying colonocytes that are shed into the colon are typically undergoing a programmed, apoptotic cell death.[27] During this healthy shedding process, the DNA of colonocytes is cleaved by endonucleases into short fragments of about 180 to 200 base pairs.[28] Colorectal cancer neoplasms, however, exfoliate dying CRC colonocytes that are not undergoing this kind of programmed, apoptotic cell death. The DNA in these cells therefore is not cleaved by endonucleases. This results in the release of 'long' DNA (L-

---

[25] Eguchi (EX1053); Sidransky (EX1035); Villa (EX1054).

[26] Tagore (EX1040) p. 1229.

[27] *Id.*

[28] *Id.*

DNA) fragments into patients' stool.[29] These L-DNA fragments can be detected in fecal samples using a test referred to as a DNA integrity assay (DIA).[30]

56. CRC cells can also become genetically unstable due to dysfunction of DNA repair.[31] One result of this genetic instability, especially in hereditary nonpolyposis colorectal cancer (HNPCC), can be a change in the length of highly repetitive DNA sequences.[32] In particular, hypermutation in the copy number of short repetitive sequences in DNA microsatellite regions causes a diagnostic change in the length of these regions.[33] Such long repeat units can also be detected in stool samples as a biomarker of CRC.

57. Fecal DNA originating from CRC cells can also be distinguished from DNA from healthy cells based on certain epigenetic

---

[29] *Id.*

[30] *Id.*; Itzkowitz (EX1006) p. 112; Boynton (EX1056) Abstract; Olson (EX1025).

[31] Jessup (EX1057) pp. 77-81.

[32] *Id.*

[33] *Id.*

modifications it contains, such as DNA methylation. DNA methylation includes the addition of a methyl group to cytosine nucleotides, typically in the context of CG dinucleotides, which are concentrated in promoter regions that regulate gene expression.[34] **Hyper**methylation (DNA regions containing many methylated cytosines) is associated with decreased expression or silencing of certain genes in cancer, whereas **hypo**methylation (DNA regions containing few methylated cytosines) is associated with increased expression.[35] Hypermethylation regions in cancer are often associated with tumor suppressor genes (to silence expression of genes that suppress cancer), whereas hypomethylation is often associated with oncogenes (to activate expression of genes that enhance cancer). Diagnostic analysis of methylation in stool samples for detection of CRC dates back to at least 2004.[36] A series of studies identified the gene SFRP2 as a diagnostic DNA methylation marker in stool, with sensitivity and specificity of at least 77%.[37] Other studies of the same period discovered methylation of vimentin, GATA-4,

---

[34] Reviewed in Chen (EX1058) p. 1124.

[35] *Id.*

[36] Müller (EX1037).

[37] *Id.*

and the HIC1 promotor in fecal DNA as a biomarker for CRC.[38] By the priority date, DNA methylation biomarkers were being used both individually and in panels with other biomarkers, including with FOBT, in diagnostic tests of CRC.[39]

58. DNA methylation can be detected in stool DNA using an approach referred to as methylation-specific PCR (MSP). In a typical MSP approach, DNA is first extracted from the stool using a conventional DNA purification method, and then treated with sodium bisulfite. This treatment selectively converts unmethylated cytosine to uracil, leaving methylated cytosines unchanged.[40] Primers that selectively bind to and amplify either the converted sequences or unconverted sequences can then be used to distinguish DNA containing the converted sequences that originated from unmethylated stool DNA from unconverted sequences, originating from methylated stool DNA.

---

[38] Chen (EX1058); Itzkowitz 2008 (EX1055); Lenhard (EX1004); Derks (EX1008).

[39] Lenhard (EX1004); Zou (EX1052); Itzkowitz (EX1006) p. 111.

[40] Li (EX1059) p. 1427.

3. RNA Expression was also used to Diagnose Colorectal Cancer

59. RNA expression can also be used as a biomarker of CRC, and was, in fact, used for diagnosis of CRC prior to the Priority Date.[41] Levels of particular RNA sequences reflect the expression of the genes from which they are transcribed. Examples of CRC RNA biomarkers in stool include RNA expressed from CD44, COX2, IGF2, FLNA, and TGFB-igh genes. [42] Stool RNA is typically detected by reverse-transcription polymerase chain reaction (RT-PCR). In RT-PCR, RNA is used as a template for production of a more easily handled corresponding DNA sequence (complementary DNA or cDNA), and the DNA sequences can then be analyzed by traditional PCR using selective primers, among other options.[43]

---

[41] Kanaoka (EX1007) ¶0008.

[42] Kanaoka 2004 (EX1061) (abstract); Matsumura 1992 (EX1062); Matsumura 1994 (EX1063); Kanaoka (EX1007) ¶¶0021-0026; Leung (EX1064) Abstract; Ahmed (EX1074) p. 16.

[43] *See, e.g.*, Kanaoka 2004 (EX1061) p. 424.

C. Biomarker Panels Empower Broader and Earlier Detection of Colorectal Cancer

60. By the Priority Date, it was recognized that fecal CRC detection assays that detected combinations of biomarkers as an indication of CRC had important advantages over assays that detected biomarkers individually. Indeed, the heterogeneity of genetic lesions and occult blood levels across CRC necessitate the use of multiple markers in combination to improve assay sensitivity.[44] This was true whether the combined biomarkers were different types of DNA markers, occult blood, or a combination of DNA markers and occult blood.

1. Panels of Different Fecal DNA biomarkers

61. By the Priority Date, combined testing for panels of different fecal DNA markers was routinely used in CRC diagnostic assays.[45] Diagnostic panels that combine analysis of mutations in multiple genes such as K-ras, p53, APC, bat-26 were published by several groups.[46] These

---

[44]Ahlquist 2000 (EX1065) pp. 1219-1220; Lenhard (EX1004); White (EX1051); Levin (EX1013); Kutzner (EX1012).

[45]Ahlquist 2000 (EX1065); Ahlquist 2000(b) (EX1066); Itzkowitz (EX1006).

[46] Reviewed in Tagore (EX1040) pp. 1227-1229.

studies sometimes also included DNA markers such as microsatellite instability and detection of L-DNA by DIA.[47] Leung et al. measured hypermethylation of seven tumor-related genes.[48] Itzkowitz et al. evaluated a diagnostic panel of two markers in fecal DNA (vimentin hypermethylation and DNA integrity).[49] An exemplary review by Tagore et al. (2004) reported the success of multiple studies combining 15 to 21 genetic markers to achieve up to 62% to 91% sensitivity for CRC.[50] By the priority date it was broadly recognized that combining biomarkers in fecal CRC diagnostic assays was a viable approach to improving the sensitivity and/or specificity of such assays.

2. Panels Combining FOBT and DNA Biomarkers

62. By the Priority Date, it was also recognized that fecal CRC diagnostics could be improved by combining fecal occult blood testing with additional nucleic acid or protein markers. It was widely recognized that FOBT screening alone, while efficient and cost-effective, had relatively low

---

[47] Ahlquist 2000 (EX1065) p. 1220.

[48] Leung (EX1064) Abstract.

[49] Itzkowitz (EX1006) Abstract.

[50] Tagore (EX1040) p. 1229.

sensitivity, was ineffective at detecting premalignant adenomas, had low positive predictive value for detection of CRC, and high false positive rates for detection of CRC.[51] Studies had shown that even optimized use of FOBT only decreases CRC mortality by 15-33%, demonstrating further opportunity for improvement.[52] FOBT also detects CRC only when it has developed sufficiently to cause occult blood in stool, whereas other approaches based on DNA biomarkers were thought to permit earlier detection.[53] The majority of negative outcomes of these features included undiagnosed cancers from false negative results and unproductive follow-up screening (typically by invasive colonoscopy) from false positive results.[54] The fact that colonoscopy is a low risk, routine procedure, as balanced against mortality from false negative diagnoses, favors the development of CRC screening tests with higher sensitivity, even if some tradeoff against specificity is required.

---

[51] Kutzner (EX1012) p. 40; Rennert (EX1045) Abstract; Leung (EX1064) p. 1070.

[52] Lenhard (EX1004) p. 142.

[53] Lenhard (EX1004) p. 147.

[54] Rennert (EX1045) p. 259; Leung (EX1064) p. 1070.

63. It was therefore well understood by the Priority Date that the sensitivity of diagnostic assays could be improved by combining fecal DNA tests with FOBT. This general principle was expressed in a number of publications. For example, a paper on K-ras point mutations in fecal DNA noted that such assays "should provide a more sensitive and specific tool for mass screening of colorectal cancer than is currently available, **especially if used in combination with fecal occult blood testing**."[55] Another report, using methylation of fecal DNA as a biomarker for CRC, "[t]he **combination of HIC1 methylation analysis with FOBT** allowed for the **detection of two thirds of CRCs**" and "**all localized cancers**."[56] Kutzner et al. combined FOBT with DNA biomarkers, concluding that "[t]he **combined application of FOBT and MD** [a DNA methylation assay] resulted in an overall sensitivity, **which could not be achieved by any of the methods alone**"[57] Indeed, the 2008 joint guideline from the American Cancer Society, the US Multi-Society Task Force on Colorectal Cancer, and the American College of Radiology proposed investigating whether "including a sensitive

[55] Nishikawa (EX1011) p. 112.

[56] Lenhard (EX1004) pp. 143, 147.

[57] Kutzner (EX1012) p. 34, Abstract.

gFOBT or FIT [another acronym for iFOBT] at the time of testing would **improve sensitivity [of DNA-based assays] without adversely affecting specificity**."[58]

64. A number of laboratories developed diagnostics that combined FOBT with other types of tests. For example, Rennert et al. proposed a combined test that included analysis of a representative DNA marker (a K-ras mutation) in stool DNA with FOBT to improve predictive value and separate true positives from false positives.[59] Kutzner et al. found that the sensitivity of combining FOBT with analysis of several DNA markers "resulted in an overall sensitivity, which could not be achieved by any of the methods alone and which is in the range of invasive diagnostic methods."[60] Karl et al. performed an analysis of six immunoassays including iFOBT and immunoassays measuring five other proteins, to identify an optimal subset.[61]

---

[58] Levin (EX1013) p. 1578 (emphasis added).

[59] Rennert (EX1045) Abstract.

[60] Kutzner (EX1012) Abstract.

[61] Karl (EX1047).

Lenhard et al. tested samples for both methylation of DNA biomarkers and fecal occult blood.[62]

65. It was thus widely understood that one mechanism for increasing sensitivity and/or specificity of CRC screening would be to combine use of multiple biomarkers, including both fecal DNA and FOBT.[63] Use of multiple biomarkers directly increased sensitivity where any positive result was considered a positive diagnosis, and increased specificity where multiple positive results were required for a positive diagnosis. Under either approach, increasing the number of biomarkers used in such a diagnostic test resulted in an improved assay.

D. Home Collection of Fecal Samples

66. Diagnostics based on patient stool samples have endeavored to balance convenience, patient compliance and resource allocation, with the needs associated with the performance of complex molecular diagnostic assays. Many fecal diagnostic assays require specialized equipment and/or

---

[62] Lenhard (EX1004) p. 145, Abstract.

[63] Nishikawa (EX1011) p. 112; Lenhard (EX1004) pp. 143, 147; Kutzner (EX1012) p. 34, Abstract; Levin (EX1013) p.1578; Rennert (EX1045) p. 258 ;White (EX1051) p. 301; Taylor (EX1067) 15:3 – 17:17.

expertise, and therefore are usually performed in medical diagnostics laboratories.[64] As a result, fecal assays typically utilize stool samples that are collected by patients at home using specially designed kits and then shipped to a laboratory for testing.[65]

1. Collecting and Partitioning Stool Samples

67. Many CRC tests require stool sample collection by the patients themselves, and as a consequence, by the Priority Date, a variety of collection means had been devised. In some tests, a patient recovers stool from the toilet bowl or other receptacle (ideally kept clear of the toilet water) using a wooden applicator and smears a small portion onto a test paper.[66] Later tests included a spatula, a brush, or a probe inserted into stool, which can be used to place an extracted sample into a collection vessel with a

---

[64] Vilkin (EX1005) p. 2519; Itzkowitz (EX1006) pp. 112, 115; Tagore (EX1040) p. 1227; Imperiale (EX1043) p. 2705; Mahon (EX1051) p. 22; Olson (EX2035) p. 183.

[65] *Id.*

[66] Young 2007 (EX1024) p. 29; Ostrow (EX1048) p. 489; Young 2004 (EX1069) p. 49.

buffer.[67] Some kits included a stool collection vessel that mounts onto the toilet bowl to collect a patient's stool, after which stabilizing buffer is added to the vessel.[68] For the convenience of the patients, sample collection is preferably completed by patients at home. Samples collected at home are then shipped to a laboratory facility for testing.[69]

68. Kits for collection of stool have been available for many decades, and typically included a collection basin into which a patient can directly defecate, where the basin could be sealed and/or portions of the sample could be transferred to smaller receptacles, optionally including a stabilizing buffer.

69. Reproduced below as Figure 1 is a schematic included in a 1985 laboratory manual which, in turn, was adapted from a 1949 publication.[70] As shown in the schematic, a stool sample is first collected by direct defecation into a receptacle (panel 2). The sample is then separated into two portions, each of which is preserved in a separate stabilizing buffer

---

[67] Young 2007 (EX1024) p. 29; Young 2004 (EX1069) pp. 49, 53-54.

[68] Itzkowitz (EX1006) p. 112.

[69] Ostrow (EX1048) p. 489; Itzkowitz (EX1006) p. 112; Shuber (EX1009).

[70] Melvin (EX1026) p. 12.

for shipment to a diagnostics laboratory (panels 3 and 4). By the Priority Date it had been routine for decades for a patient to separate a fecal sample into different sealable containers, each containing a different stabilizing buffer, in order to preserve different biomarkers during shipment to a diagnostic laboratory.

Figure 1

ADAPTED FROM BROOKE AND GOLDMAN, 1949

NOTE: BOTH SOFT AND *FORMED* SPECIMENS SHOULD BE SUBMITTED BY THIS METHOD. SPECIMENS MUST BE *FRESH* WHEN PLACED IN VIALS.

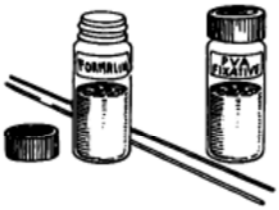

1 THE KIT CONSISTS OF TWO GLASS VIALS (ONE WITH 5% FORMALIN AND ONE WITH PVA-FIXATIVE) AND TWO APPLICATOR STICKS.

2 THE STOOL SHOULD BE PASSED INTO A DRY CONTAINER. URINE SHOULD NOT BE PASSED INTO THE SAME CONTAINER.

3 USING APPLICATOR STICKS, PLACE A QUANTITY OF THE STOOL (ABOUT THE DIAMETER OF A QUARTER) INTO THE VIAL CONTAINING FORMALIN, SCREW CAP ON TIGHTLY.

4 PLACE A SIMILAR QUANTITY INTO THE VIAL CONTAINING THE PVA-FIXATIVE.

5 THOROUGHLY BREAK UP SPECIMEN IN THE PVA-FIXATIVE, USING APPLICATOR STICKS. SCREW CAP ON TIGHTLY AND SHAKE VIGOROUSLY.

6 PACK THE TWO VIALS SO AS TO PROTECT AGAINST BREAKAGE, ENCLOSE APPROPRIATE IDENTIFICATION, AND MAIL OR DELIVER TO YOUR PUBLIC HEALTH LABORATORY.

70. Figure 2 is a "schematic diagram of a receptacle for containing a stool sample" from a patent application filed by Exact in 1996.[71] This figure illustrates a system for the collection of a fecal sample by direct defecation into a receptacle. The patent explains that "[s]tool is voided into a receptacle that is preferably small enough to be transported to a testing facility" that "may be fitted to a conventional toilet such that the receptacle accepts stool voided in a conventional manner."[72] Further, "[t]he receptacle additionally may comprise means for removing a cross-sectional portion from the stool" and "may comprise means for introducing homogenization buffer or one or more preservatives." [73] The patent further states that "[t]he receptacle, whether adapted to fit a toilet or simply adapted for receiving the voided stool sample, should include sealing means sufficient to contain the voided sample and any solution added thereto and to prevent the emanation of odors."[74]

---

[71] Lapidus '650 (EX1028) Figure 2, 4:6-7.

[72] *Id.* 7:24-27.

[73] *Id.* 7:31-35.

[74] *Id.* 7:45-49.

Figure 2

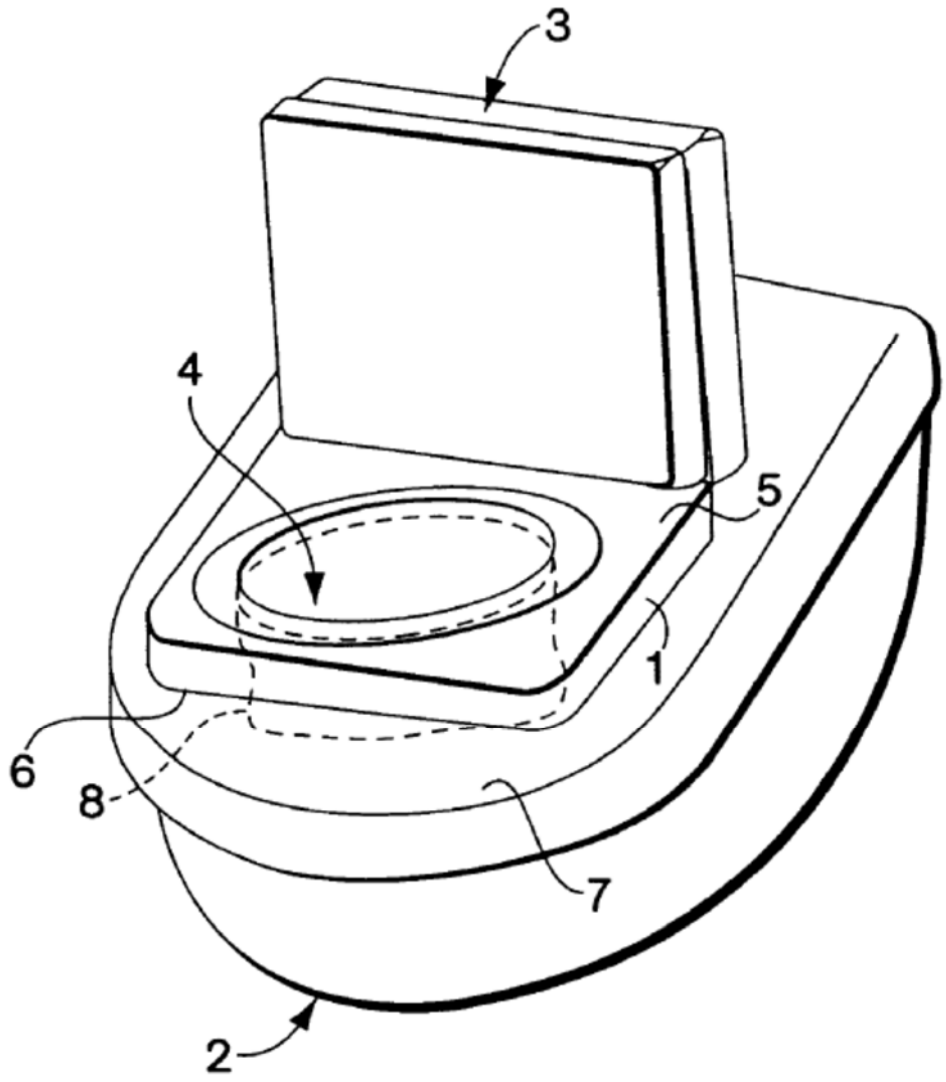

71. Figure 3 is an exemplary stool collection device described and claimed in a patent application filed in 1997.[75] The depicted stool collection device is designed to separately collect two portions of a sample into

[75] Inbar (EX1070) Fig. 1.

separate buffers. The patent application states that the device is useful for collection and transportation of stool with a preservation medium, which can include "at least two containers, each holding a different preservation medium" when "a variety of different entities have to be assayed in the pasty material."[76] As explained in the application, "in the case of a pasty material which is to be sampled for the purpose of two or more different laboratory assay, such as stool, it would be preferable to provide a system for collection and preservation of pasty material which comprises two or more separate containers, each one holding a different transport or suspension medium."[77] Thus, the device in Figure 3 is another illustration of a kit designed for the at-home separation of a fecal sample into portions so that separate biomarkers are preserved in an appropriate buffer for shipment to a diagnostic laboratory.

---

[76] *Id.* 1:1.1-22, 4:13-22.

[77] *Id.* 3:3-8.

Figure 3

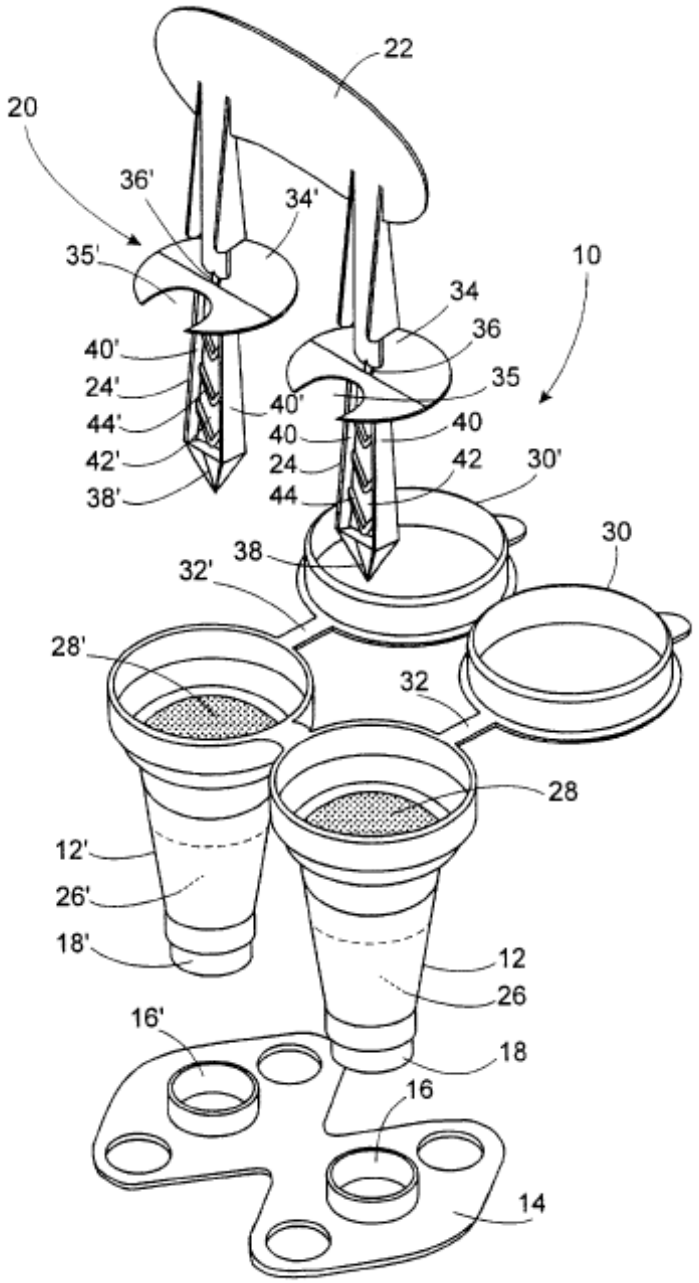

72. Figure 4 shows a “fecal test sampling device” for an iFOBT described in Vilkin. The device is shaped like a small test tube having a

probe with a serrated tip attached to the inner portion of the device's cap.[78] When the device is used, the probe is "poked into the stool and then pushed back into the tube, past a scraper and through a membrane into the sample cup."[79] This results in sealing of the fecal test sampling device with the tip of the probe being in a closed amount of hemoglobin stabilizing buffer.[80] The samples are then "closed in zip-lock bags and kept in the refrigerator until returned to the developing laboratory where they are also kept at 4°C until development."[81] Vilkin teaches that when the samples are in this buffer they "maintained their elevated fecal Hb levels for 21 or more days" when stored at 4°C.[82] Thus, Figure 4 illustrates an example of a device that, when it is used, facilitates the removal of a portion of a fecal sample into a sealed container where it is combined with a stabilizing buffer and then shipped to a diagnostic laboratory.

---

[78] Vilkin (EX1005) p. 2520.

[79] *Id.*

[80] *Id.*

[81] *Id.*

[82] *Id.* 2521.

Figure 4

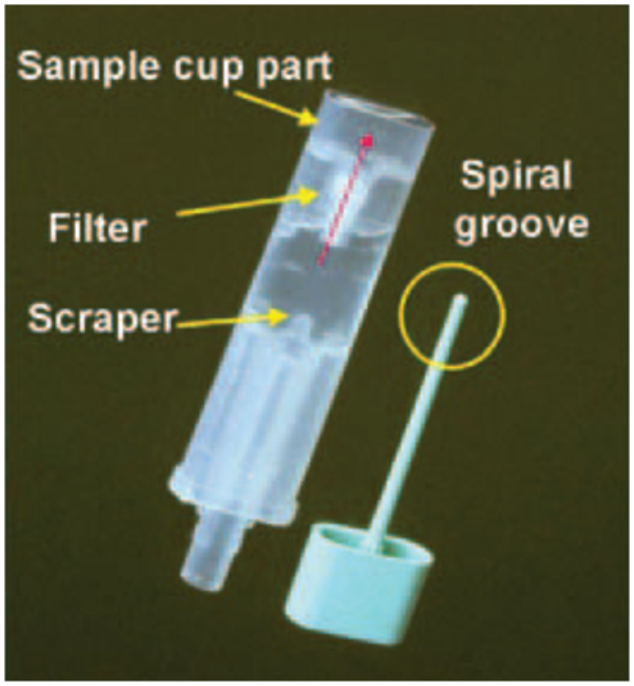

2. Different Buffers were Used to Preserve Different Biomarkers in Fecal Samples

73. By the Priority Date, maintenance of biomarkers in stool samples during transport between at-home collection and laboratory analysis was recognized as an important concern that could be addressed through the use of appropriate stabilizing buffers. At room temperature, bacterial enzymes found in stool can degrade human DNA. This is a particularly important problem because, in stool, bacterial cells outnumber human cells by orders of magnitude. Similarly, protein biomarkers, such as hemoglobin, can be degraded by bacteria or enzymes contained in feces, resulting in loss

of detectable protein. Moreover, the standard storage approach of freezing samples was not well suited to at-home stool collection. Home users typically do not have access to standardized equipment, nor a straightforward means to ship frozen samples to testing facilities.

74. As a result of the above concerns, many assays used different stabilizing buffers to minimize loss of sample integrity between at-home sample collection and laboratory analysis, without freezing.[83] For example, certain buffers prevent degradation of DNA, and are therefore used when long DNA, mutated DNA, or methylated DNA is used as a biomarker.[84] Other buffers stabilize blood proteins and are therefore used when blood proteins are used as a biomarker.[85]

---

[83] Olson (EX1025) Abstract; Shuber (EX1009) 10:10-15; Vilkin (EX1005) pp. 2520-2521; Lapidus '178 (EX1027) 3:10-14; Itzkowitz (EX1006) pp. 111-112.

[84] Olson (EX1025) p. 183; Shuber (EX1009) 10:10-15; Itzkowitz (EX1006) pp. 111-112.

[85] Vilkin (EX1005) pp. 2520-2521; Grow (EX1042) Abstract; Karl (EX1047) p. 1127; Hirata (EX1071) p. 1573.

75. By the Priority Date, numerous published studies had emphasized the importance of using appropriate buffers to preserve DNA in stool samples being used in CRC diagnostic assays.

76. Imperiale, for example, reports results from a large, multi-center, randomized study to evaluate a fecal DNA test compared to a commercial FOBT, Hemoccult II, which is a well-known guaiac-based test.[86] In Imperiale, each participating subject provided a stool sample for DNA analysis as well as FOBT, and subsequently underwent a colonoscopy procedure to determine the presence of CRC, premalignant adenomas, and polyps, as applicable. Stool samples were collected at home by each subject by collection of whole samples in containers, which were then shipped within 72 hours at 0-4˚C to the lab for DNA testing. Once received at the lab, all stool samples were stored frozen (-80˚C) until processed further. Each subject was also required to remove portions of the fecal samples to Hemoccult cards, which were sent to the physician directly. No stabilizing buffers were used. In the study the DNA test detected 52% of cancers, whereas the FOBT detected only 13%, sensitivities significantly lower than had been previously reported in other studies. Even with these relatively low

[86] Imperiale (EX1043).

sensitivities, there was little overlap of subjects detected by each test, indicating that combining the tests would provide increased sensitivity.

77. In a subsequent publication that I co-authored, entitled "DNA Stabilization Is Critical for Maximizing Performance of Fecal DNA-Based Colorectal Cancer Tests," my co-authors at Exact and I describe the stabilization of DNA from stool and also directly demonstrate the improvement in clinical sensitivity of a similar multi-panel stool DNA test as described above.[87] In this study, stool samples were stored at room temperature in controlled experiments (for 36 and 48 hours), with and without stabilization buffers. A total of 11 of 38 stool samples from subjects with confirmed CRC were positive for the long-DNA assay (a cancer-specific marker of non-apoptotic DNA from malignant colonocytes) at time-zero. Without addition of stabilization buffer, 9 of 11 (82%) of these stool samples had sufficient degradation of long-DNA to result in a negative assay after 36 hours of room temperature storage. When separate aliquots of the same stool samples were first mixed with stabilization buffer, all 11 (100%) of samples remained positive for the long-DNA assay. Additional experiments demonstrated that the amount of recoverable DNA in general was dramatically impacted by degradation. Without addition of stabilization

[87] Olson (EX1025).

buffers, 65% to 98% of recoverable DNA was lost after room temperature storage.

78. Buffers are similarly important for assays based on detection of blood proteins, the stability of which is increased in certain blood protein stabilizing buffers.[88] In one study of six immunoassays including iFOBT, the authors noted that "[b]ecause patients in a screening situation are likely to collect stool samples at home, the sampling procedure and analyte stability are crucial," especially for hemoglobin and the hemoglobin-haptoglobin complex.[89] The solution to this concern was that "[n]ovel sampling devices, that are prefilled with extraction buffer and can be mailed to the laboratory at ambient temperature, have been introduced."[90]

79. For example, Vilkin et al. reported use of a "fecal test sampling device is shaped like a small test tube with the fecal probe inserted into it," where the "[t]he tip [of the probe] is then put in a closed amount of Hb

[88] Hirata (EX1071) p. 1573.

[89] Karl (EX1047) p. 1127.

[90] *Id.*

stabilizing buffer."[91] Fecal samples in Hb stabilizing buffer maintained a positive signal for at least 21 days when stored at 4°C.[92]

80. In another example, Grow et al. explained that stool samples should be dispersed in "an aqueous fecal test solution formulated with one or more preservatives, analyte stabilizing agents and endogenous interference reducing agents," and recognized that "[f]or determining human hemoglobin in a sample of human stool, the aqueous fecal test solution preferably contains a proteinase inhibitor, formaldehyde and an animal albumin."[93]

81. Thus, by the Priority Date, the use of appropriate buffers to stabilize stool proteins and nucleic acids without freezing was routine.

3. Partitioning Samples into Multiple Vessels for Stabilization during Shipment

82. It had long been recognized that, where two or more different diagnostic assays were used, testing can be facilitated by having the patient separate the fecal sample into two separated vessels or compartments prior to shipment to the diagnostic laboratory.

---

[91] Vilkin (EX1005) p. 2520.

[92] *Id.* pp. 2520-2521.

[93] Grow (EX1042) Abstract.

83. Indeed, as illustrated in Figure 1, above, the need to partition a fecal sample to separately preserve the portions in different stabilizing solutions had been recognized for decades by the Priority date. According to the illustrated schematic, which appears in a 1985 laboratory manual and is adapted from a 1949 publication, a stool sample is first collected by direct defecation into a receptacle and then separated of into two portions, each of which is preserved into a separate stabilizing buffer for shipment to a diagnostics laboratory.[94]

84. The need for at-home separation of a fecal sample into different vessels so different buffers can be used to preserve the distinct biomarkers of interest is also the basis of the fecal sampling device illustrated above in Figure 3. This device, which is disclosed and claimed in a 1997 patent application, includes "at least two containers, each holding a different preservation medium" when "a variety of different entities have to be assayed in the pasty material."[95] According to the application, "in the case of a pasty material which is to be sampled for the purpose of two or more different laboratory assay, such as stool, it would be preferable to provide a

[94] Melvin (EX1026) p. 12.

[95] Inbar (EX1070) 1:1-22, 4:13-22.

system for collection and preservation of pasty material which comprises two or more separate containers, each one holding a different transport or suspension medium."[96] Thus, Figure 3, and the application from which it is derived, provides another example where a fecal sample is partitioned so portions can be preserved in different buffers for shipment to a diagnostic facility.

85. For example, in one paper in which an FOBT was combined with DNA testing, patients could remove a portion of the sample for FOBT testing, and then ship both the removed portion and the remaining portion to the diagnostic laboratory for testing.[97]

86. Additional examples of patients separating fecal samples at home to facilitate testing of different biomarkers include Karl, in which iFOBT was combined with other protein biomarkers, and which explains that "[e]ach participant provided two different portions of approximately 1 g of feces from one bowel movement using a stool collection tube."[98]

---

[96] *Id.* p. 3:3-8.

[97] Ahlquist 2008 (EX1044) pp. 442-443.

[98] Karl (EX1047) p. 1123.

87. Thus, by the Priority Date, there were numerous examples of fecal samples being physically separated at home prior to shipment to a diagnostic laboratory to be tested for multiple, distinct diagnostic assays.

V. Legal Standards

88. I understand that in an IPR proceeding such as this one, the petitioner challenging a patent bears the burden of proof by a preponderance of the evidence to show that a patent claim is either anticipated or would have been obvious to the person of ordinary skill in the art.

89. I have been informed that a patent claim is invalid if the claimed invention would have been obvious to the POSA at the time the alleged invention was made. Whether a claimed invention would have been obvious depends on (1) the scope and content of the prior art; (2) differences between the prior art and the claims; (3) the level of ordinary skill in the art; and (4) objective indicia of non-obviousness. Objective indicia of non-obviousness (which I understand are also known as secondary considerations) include: copying, long-felt but unsolved need, failure of others, commercial success, unexpected results or properties achieved by the claimed invention, and skepticism of skilled artisans before the invention.

90. In particular, I have been advised that, for an invention to be regarded as "obvious," the POSA must have had a reason or been motivated

to modify the prior art or to combine one or more prior art references in a manner that would yield the claimed invention. I understand, however, that the prior art does not need to contain an explicit reason or motivation to modify the prior art, but that a motivation or reason may be found explicitly or implicitly in market forces, design incentives, the interrelated teachings of multiple patents and publications, any need or problem known in the field of endeavor at the time of the invention, and the background knowledge, creativity, and common sense of the POSA.

91. I have been informed that exemplary rationales that may support obviousness include: (a) combining prior art elements according to known methods to yield predictable results; (b) simple substitution of one known element for another to obtain predictable results; (c) use of known technique to improve similar devices (methods, or products) in the same way; (d) applying a known technique to a known device (method, or product) ready for improvement to yield predictable results; (e) choosing from a finite number of identified, predictable solutions, with a reasonable expectation of success or "obvious to try"; (f) known work in one field of endeavor may prompt variations of it for use in either the same field or a different one based on design incentives or other market forces if the variations are predictable to one of ordinary skill in the art; and (g) some

teaching, suggestion, or motivation in the prior art that would have led one of ordinary skill to modify the prior art reference or to combine prior art reference teachings to arrive at the claimed invention.

92. I have also been informed that, for a claim to be obvious, the POSA must have had a reasonable expectation of success with respect to the claimed invention. I understand that a reasonable expectation of success does not, however, require certainty of success, and that obviousness cannot be avoided simply by a showing of some degree of unpredictability in the art so long as there was a reasonable probability of success.

93. I understand that the use of hindsight in an obviousness analysis is impermissible. In other words, I understand that it is improper to start from the challenged patent as blueprint to work backwards to the claimed invention. As such, I have not used hindsight in my analysis. I further understand that it is *not* hindsight to rely on knowledge that was within the level of ordinary skill, nor must there be an express motivation to modify or combine the prior art.

94. Finally, I have been informed that, while objective indicia or secondary considerations can support non-obviousness, they are only relevant if there is a nexus between the merits of the claimed invention and the evidence of objective indicia. I understand that, in order to show nexus, a

patentee must show that the evidence of secondary considerations results both from what is claimed and what is novel in the claim. I also understand that nexus requires a showing that any product asserted to be the source of secondary considerations both embodies and is co-extensive with the claims challenged as obvious.

VI. The Challenged Patent

A. The ’781 Patent

95. I understand that the ’781 patent is titled “Fecal Sample Processing and Analysis Comprising Detection of Blood” and that its only named inventor is Joost Louwagie. I understand that Joost Louwagie was an OncoMethylome employee.[99]

96. I understand that the ‘781 patent is part of a family of applications that claims priority to a provisional application filed on February 3, 2009 by the Belgian company OncoMethylome (the “’781 patent family”). I understand that in April 2017, the ’781 patent family was assigned to Exact.[100]

---

[99] ’581 Transmittal (EX1015); Joost Louwagie Profile (EX1016).

[100] Recorded Assignment (EX1031).

97. I understand that Exact filed the application that gave rise to the ’781 patent on September 28, 2022. I understand that the only rejection issued by the patent office during its prosecution was for obviousness-type double patenting over a co-pending family member, which Exact overcame by filing a terminal disclaimer. I understand that the ’781 patent issued on April 25, 2023.

98. The supposed invention is directed to methods of separately detecting both blood proteins and epigenetically-modified DNA in a fecal sample. The ’781 patent particularly discloses the detection of both epigenetically-modified DNA and fecal occult blood in a diagnostic for CRC. The application plainly sets forth that “[t]he invention is based upon a combination of tests for detecting proteins and epigenetic modification markers respectively in the same fecal sample.”[101] Thus, the ‘781 patent is directed to methods of separately detecting blood proteins and epigenetically-modified DNA in a fecal sample. I note that by the Priority

[101] ’781 patent (EX1001) 4:3-16, 6:40-67.

Date, the advantages associated with combining such fecal DNA tests and FOBT in a CRC assay were well known in the art.[102]

99. Despite the occasional use of broad terminology around the two assays, such as "(a) detecting the presence of blood" and "(b) detecting an epigenetic modification," the specification focuses on FOBT and detection of methylated DNA, and relies on known assays to do so.[103] For example, "step (a)" will "[o]ften…rely upon detecting a representative blood protein in the fecal sample" and "includes all variants of fecal occult blood tests."[104] In fact, the only described blood tests disclosed [or described] appear to be gFOBT and iFOBT.[105] With respect to epigenetic modification, the application states that "the epigenetic modification is often methylation."[106] The means of assaying methylation are merely those standard in the art. The

---

[102] Lenhard (EX1004); Kutzner (EX1012); Ahlquist 1988 (EX1072); Rennert (EX1045); White (EX1051); Nishikawa (EX1011); Levin (EX1013).

[103] '781 patent (EX1001) 4 :6-13.

[104] *Id.* 7:8-45.

[105] *Id.*

[106] *Id.* 24:30-31.

application states that "[d]etermination of the methylation status may be achieved through any suitable means…[which] include bisulphite genomic sequencing and/or by methylation specific PCR [(MS-PCR)]."[107] In fact, the '781 patent acknowledges that such fecal protein tests and fecal DNA tests were known in the art, though it asserts that "[t]o date, immunochemical tests and DNA tests for CRC detection have been evaluated and compared on a separate basis only."[108] Thus, the '781 patent acknowledges that such fecal protein tests and fecal DNA tests were known to those of skill in the art.[109]

100. The application likewise relies upon known buffers to stabilize samples for DNA (DNA methylation) and blood protein (FOBT) analysis. With respect to "a buffer which prevents denaturation or degradation of blood proteins," the application simply states that "[s]uitable buffers for protein preservation are known in the art and commercially available."[110] With respect to "buffers for maintaining DNA integrity," the application

---

[107] *Id.* 13:34-63.

[108] *Id.* 1:56-64, 3:5-22, 3:41-45.

[109] *See also Id.* 1:56-64; 3:5-22; 3:41-45.

[110] *Id.* 18:1-21.

merely notes that "a suitable stabilizing buffer as known to those in the art, may be added."[111]

101. I understand that on May 22, 2023, Geneoscopy filed a request for *ex parte* reexamination of the '781 patent, which was granted on June 29, 2023.[112] I have reviewed the reexamination request and note that it was based on different prior art and arguments than those I am presenting here. I understand that on October 18, 2023, the patent office issued a Notice of Intent to Issue an *Ex Parte* Reexamination Certificate, upholding the claims as granted.[113] I have reviewed this Notice and observe that the patent office's stated basis for upholding the claims was that "[n]one of the references of record reasonably suggest collection at home with each of the fecal portions sealed in separate containers, each with a buffer therein as required by independent claim 1."[114] My analysis below focuses on other prior art references and specifically addresses this alleged deficiency in the references of record in the reexamination proceeding.

---

[111] *Id.* 11:48-54, 18: 26-28.

[112] Order Granting Request for *Ex Parte* Reexamination (EX1022).

[113] Notice of Intent to Issue *Ex Parte* Reexamination Certificate (EX1023).

[114] *Id.* p. 3.

B. Summary of the Claimed Subject Matter

102. The ’781 patent includes one independent claim and 19 dependent claims.[115] All of the claims relate to a method for a subject to collect a stool sample at home, by defecating directly into a sealable collection vessel.[116] A portion of the stool is removed to a separate sealable container.[117] The removed portion is combined with a buffer that prevents denaturation or degradation of blood proteins and sealed shut, which I understand is so that the sample is preserved for use in a fecal occult blood test.[118] The remaining portion is combined with a “stabilizing buffer” and sealed shut.[119] The stabilizing buffer is to “retain DNA integrity,” so I understand that this is to directly preserve DNA in a portion of the sample

---

[115] I have been informed and understand that an independent claim in a patent does not refer back to any previous claim, while a dependent claim does so refer and is understood to incorporate all of the limitations recited in its “parent” claim and must specify a further limitation of the subject matter claimed in its parent.

[117] ’781 patent (EX1001) Claim 1.

[118] *Id.* Claim 1, Claim 14.

[119] *Id.* Claim 1.

for later analysis.[120] Claim 2 further describes that the sample portions are delivered to a medical diagnostics laboratory, where the FOBT and/or DNA analyses can be carried out.

103. Claim 3 provides a method of processing the sealed vessels of fecal sample from claim 1, where the removed portion is tested for an amount of a blood protein, and nucleic acid extracted from the remaining portion is tested for an amount of a human nucleic acid. The nucleic acid testing could determine the expression of a human gene (Claim 4), e.g., by testing for an epigenetic modification of human DNA (claim 5). This could include measuring an amount of a methylated human DNA (claim 6), which is consistent with the understanding discussed above that methylation impacts gene expression. The epigenetic modification can be aberrant methylation (claim 7), such as hypermethylation (claim 8). The authors of the '781 patent have therefore treated tests that indirectly indicate gene expression, such as tests for epigenetic modification, including testing for DNA methylation, as being within the scope of "determining gene expression," as the term is used in the '781 patent (see Claims 4-8). The authors have also clearly included hypermethylation as an example of

[120] *Id.* Claim 3, 11:48-54.

aberrant methylation in Claims 7 and 8. As mentioned above, hypermethylation is typically associated with decreased expression, whereas hypomethylation is usually associated with increased expression.[121]

104. The epigenetic modification can be in a gene or promoter region of a gene (claim 9), which again is consistent with knowledge of epigenetic modifications such as methylation, which tends to occur in promoter regions that regulate gene expression.[122] Claim 10 mentions specific genes, including, e.g., SFRP2 and GATA-4, both of which were known to be selectively methylated in CRC cells by the Priority Date.[123]

105. Claim 11 states that the assay for epigenetic modification can include modifying the nucleic acid with "bisulfate" ions under conditions wherein unmethylated cytosine is converted to uracil. I am unaware of an assay for epigenetic modification that uses "bisulfate" ions. As such, I suspect that the claim includes a typographical error and was, in fact, intended to recite "bisulfite" ions. Consistently, there is no disclosure of the use of "bisulfate" in the '781 Patent, which instead refers to "bisulfite" or

---

[121] *Id.*

[122] Reviewed in Chen (EX1058) p. 1124.

[123] *See*, *e.g.*, Müller (EX1037).

"bisulphite."[124] Assuming the claim is intended to refer to bisulfite ions, bisulfite conversion is the standard technique to prepare DNA for analysis of methylation. In a bisulfite conversion assay, DNA is treated with bisulfite ions to selectively converts unmethylated cytosine to uracil, leaving methylated cytosines unchanged.[125]

106. Claim 12 recites that expression of a human gene is by measuring an amount of RNA expressed from the gene, e.g., by reverse transcriptase polymerase chain reaction (RT-PCR) as in Claim 13. RT-PCR is a standard method for detecting RNA.[126]

107. The claims also include testing the concentration of hemoglobin in the removed portion (Claim 14). This is a characteristic output of various FOBTs, including the well-known iFOBT.[127] The iFOBT is based on immunochemical detection of hemoglobin, as set forth in Claim 15. Claims 16-20 describe thresholds for determining that an iFOBT is positive, in

---

[124] '781 patent (EX1001) 36:52-57, 37:1-2, 13:34-63.

[125] Li (EX1059) p. 1427.

[126] *See, e.g.*, Leung (EX1064) Abstract; Kanaoka (EX1007) ¶¶0008-0026, 0055-0068 (Example 1).

[127] *See, e.g.*, Vilkin (EX1005) p. 2519.

particular, when the concentration of hemoglobin detected in the removed portion is at least 5 ng/ml, 10 ng/ml, 20 ng/ml, 50 ng/ml, or 200 ng/ml respectively. The threshold applies to the level of hemoglobin in the removed portion in buffer, rather than to the original stool itself. It was well-established that hemoglobin concentration could be measured by iFOBT, and that an advantage of quantitative iFOBT was that "the threshold may be adjusted to fit the clinical and/or economic setting."[128] Threshold selection was thus a matter of routine optimization. Exemplary "usual" thresholds included 20 ng/mL to 100 ng/mL, but research had systematically explored the range of thresholds, including, e.g., a study in which "threshold for a positive test was varied from 50 to 150 ng/mL in 25 ng/mL increments."[129] Use of lower hemoglobin thresholds was also routine in the art.[130] As the

---

[128] Kahi (1050) p. 386; *see also* Vilkin (EX1005) p. 2519.

[129] Kahi (1050) p. 386.

[130] Vilkin (EX1005) p. 2523; Guittet (EX1010) p. 210 (describing 20 ng/ml as "the usual cut-off point"); Hoepffner (EX1029) p. 140 (describing use of a 10 ng/ml threshold).

threshold increased, iFOBT typically become less sensitive, but also produced fewer false positives.[131]

VII. SUMMARY OF SELECTED PRIOR ART REFERENCES

108. In my opinion, Lenhard, Itzkowitz, and Vilkin, either alone or in combination with Kanaoka or Derks, render all of the claims of the ’781 patent obvious. It is also my opinion that Shuber and Vilkin, either alone or in combination with Kanaoka or Derks, also render all of the claims of the ’781 patent obvious. Below, I briefly summarize the teachings of Lenhard, Itzkowitz, Vilkin, Shuber, Kanaoka, and Derks, as they would have been understood by the POSA as of the Priority Date.

A. Lenhard (EX1004)

109. Lenhard is a journal article published in the February, 2005 issue of the journal *Clinical Gastroenterology and Hepatology.*[132] The *Clinical Gastroenterology and Hepatology* web site states that Lenhard published on-line on January 12, 2005.[133] *Clinical Gastroenterology and Hepatology* is a well-regarded journal that is indexed on PubMed and that I

[131] Kahi (EX1050) p. 386.

[132] Lenhard (EX1004) p. 143.

[133] Lenhard Printout (EX1073).

consulted when doing research on CRC diagnostics. In my experience with this journal, the issue date in which the article appears is regularly provided within the journal's articles, and this date closely approximates the time when the article becomes available to the public. Consistently, Lenhard is cited in the "Background of the Invention" section of PCT Publication No. WO 2008/084219, an OncoMethylome application, that was filed on January 9, 2008 and that published on July 17, 2008.[134] Lenard was therefore publicly available more than a year before the Priority Date.

110. Lenhard describes the combined analysis of DNA methylation and FOBT in stool samples to detect CRC.[135] The background of Lenhard expresses a motivating concern that was well understood by those of skill in the art: "Because heterogeneity of tumors, usually multiple markers distributed throughout the human genome need to be analyzed."[136] It was widely understood that even within a particular type of cancer, such as CRC, the specific genetic mutations and phenotypic profile will vary across patients, and over time in the same patient. Combining markers was

---

[134] Van Engeland (EX1046) 5:25-30, 217:15-27.

[135] Lenhard (EX1004) pp. 143, 147.

[136] *Id.* Abstract.

understood as an approach to improve sensitivity and specificity in clinical diagnostics. Lenhard's primary goal was to identify DNA methylation markers with comparable utility to FOBT, but Lenhard's results led the authors to conclude that "combination of HIC1 [methylation] with FOBT resulted in the detection of almost two thirds of CRCs."[137] The combination is especially compelling because DNA methylation is thought to be a better early marker for CRC than FOBT, but FOBT is sensitive for later stage cancers.[138] As such, the combination of DNA methylation with FOBT combines the advantages of both approaches, leading to the high rate of detection reported by Lenhard for combined use.

111. The stool samples in Lenhard were collected from patients in a health care facility before they underwent an endoscopy.[139] The samples were then sent to and received by a diagnostic laboratory within 10 hours of defecation.[140] At the laboratory, each sample was divided into at least two

---

[137] *Id.* pp. 143, 147.

[138] *Id.* p. 147.

[139] *Id.* p. 143.

[140] *Id.*

portions that were treated differently, depending on whether the portion was for the DNA methylation assay or for the FOBT.[141]

112. All stool samples were subjected to FOBT.[142] For FOBT, a separate portion of each stool sample was applied to an FOBT test card immediately after receipt at the laboratory.[143] The FOBT used here was a guaiac fecal occult blood test (gFOBT).[144] The remaining portion of the samples were then frozen until the promotor methylation assay was performed.[145]

113. Lenhard selected methylation of the promoter of the hypermethylated in cancer 1 (HIC1) gene as the biomarker used in the methylation assay because it had previously been found to be methylated in CRC, but not in normal or aging colonic tissue.[146] For the analysis, a kit was used to purify DNA from a thawed portion of the frozen stool, and a

---

[141] *Id.* pp. 143-144.

[142] *Id.* p. 145.

[143] *Id.*

[144] *Id.* pp. 143, 145.

[145] *Id.* p. 143.

[146] *Id.*

standard conversion step by treatment with sodium bisulfite (bisulfite ions) was applied before PCR amplification.[147] The PCR primers were designed to distinguish between HIC1 promoter DNA that had, or had not, been methylated.[148] As mentioned above, this process is called methylation-specific PCR (in Lenhard's manuscript, "MSP").[149] As noted by Lenhard, MSP "has been successfully used to detect DNA methylation in primary tumors and in various body fluids."[150]

114. In short, by this method of sample processing, Lenhard tested for CRC by separating the patient's stool sample into separate aliquots and then performing a gFOBT on one and a DNA methylation test on the other.

115. Lenhard's results demonstrated that the combined application of both the DNA methylation assay and the FOBT detected CRC with greater sensitivity than either assay alone.[151] Indeed, Lenhard found that "[t]he **combination of H1C1 methylation analysis with FOBT allowed**

---

[147] *Id.* pp. 143-144.

[148] *Id.*

[149] *Id.* pp. 142-144.

[150] *Id*. 142.

[151] *Id.* pp. 143, 147.

for the detection of two thirds of CRCs."[152] Specifically, Lenhard determined that while HIC1 methylation alone detected 42% of CRCs and FOBT alone detected 35% of CRCs, the combination of the two tests was able to detect 65% of CRCs.[153] Lenhard also noted that "the combined test detected all localized cancers."[154]

B. Vilkin (EX1005)

116. Vilkin is a journal article published in the November, 2005 issue of the journal *The American Journal of Gastroenterology.*[155] *The American Journal of Gastroenterology* is the official publication of the American College of Gastroenterology. It is a well-regarded journal that is indexed on PubMed and that I consulted when doing research on CCR diagnostics. In my experience with this journal, the issue date in which the article appears is regularly provided within the journal's articles, and this date closely approximates the time when the article becomes available to the public. This issue of *The American Journal of Gastroenterology* was date-

---

[152] *Id.* pp. 143, 147 (emphasis added).

[153] *Id.* Table 4 and p. 147.

[154] *Id.* p. 147.

[155] Vilkin (EX1005).

stamped by the Ebling Library at the University of Wisconsin on November 11, 2005. Vilkin was therefore publicly available more than a year before the Priority Date.

117. Vilkin describes the advantages of an immunochemical FOBT (iFOBT) for detection of CRC, in particular as compared to legacy guaiac-based FOBT (gFOBT).[156] The iFOBT applied by Vilkin is also quantitative and automated.[157] Vilkin explains that iFOBT, and in particular automated, quantitative iFOBT, have a number advantages over gFOBT. For example, Vilkin explains that gFOBT "is faulted for its low sensitivity for significant colorectal neoplasia, and low specificity due to nonspecificity for human hemoglobin (Hb)" as well as "by the possibility of inaccurate development and evaluation by inadequately trained personnel."[158] As has also been noted above, gFOBT are sensitive to dietary peroxidases from meat and vegetables, meaning that gFOBT come with dietary restrictions with important compliance ramifications.[159] In contrast, "[t]he automated-

---

[156] *Id.* Abstract.

[157] *Id.* Abstract.

[158] *Id.* p. 2519.

[159] *Id.* p. 2524, Abstract.

developed and quantitative I-FOBT is human Hb specific, eliminates the need for diet restrictions and the Hb quantification allows selection of a suitable threshold for follow-up colonoscopy."[160]

118. Vilkin demonstrates the use of an at-home stool sampling system, designed to facilitate patient collection and shipping of the collected sample to the diagnostic laboratory.[161] The device, shown in Figure 1 of Vilkin, included a sample tube filled with a hemoglobin (Hb) stabilizing buffer, and a probe that seals the tube shut when docked in the tube.[162] Patients poke their stool with the probe, which has serrations that collect stool.[163] When the probe is docked back in the sample tube, about 10 mg of stool is immersed in the stabilizing buffer.[164] Patients prepared three separate samples prior to a scheduled colonoscopy, which were then refrigerated until

---

[160] *Id.* p. 2519.

[161] *Id.* p. 2520.

[162] *Id.* p. 2520, Figure 1.

[163] *Id.*

[164] *Id.*

they were provided to the laboratory.[165] Thus, in the iFOBT of Vilkin, the at-home patient uses a fecal test sampling device (shown in the left panel of Figure 1, reproduced below) to remove a portion of a fecal sample into a separate sealable container with a hemoglobin (Hb) stabilizing buffer:

> The fecal test sampling device is shaped like a small test tube with the fecal probe inserted into it and sealing it. **The probe has a serrated tip, which is poked into the stool and then pushed back into the tube**, past a scrapper, and through a membrane into the sample cup. These remove most of the excess feces and leave the stool collected (about 10 mg) into the serrations (Fig. 1). **The tip is then put in a closed amount of Hb stabilizing buffer**.[166]

119. The at-home patient then ships the stabilized sample to the diagnostic laboratory without freezing.[167] When stored in the stabilizing

---

[165] *Id.* p. 2520, Figure 1.

[166] *Id.* p. 2520 (emphasis added).

[167] *Id.*

buffer at 4°C, all fecal samples "maintained their elevated fecal Hb levels for 21 or more days."[168]

120. Once the removed portion of the sample was received in the testing laboratory, it was analyzed on an automated desktop instrument (the OC-Sensor instrument, depicted in the right panel of figure 1, reproduced below), which performs the automated immunochemical detection of human Hb.[169]

Vilkin Figure 1. Left: Fecal test sampling device/ Right: Desktop instrument.

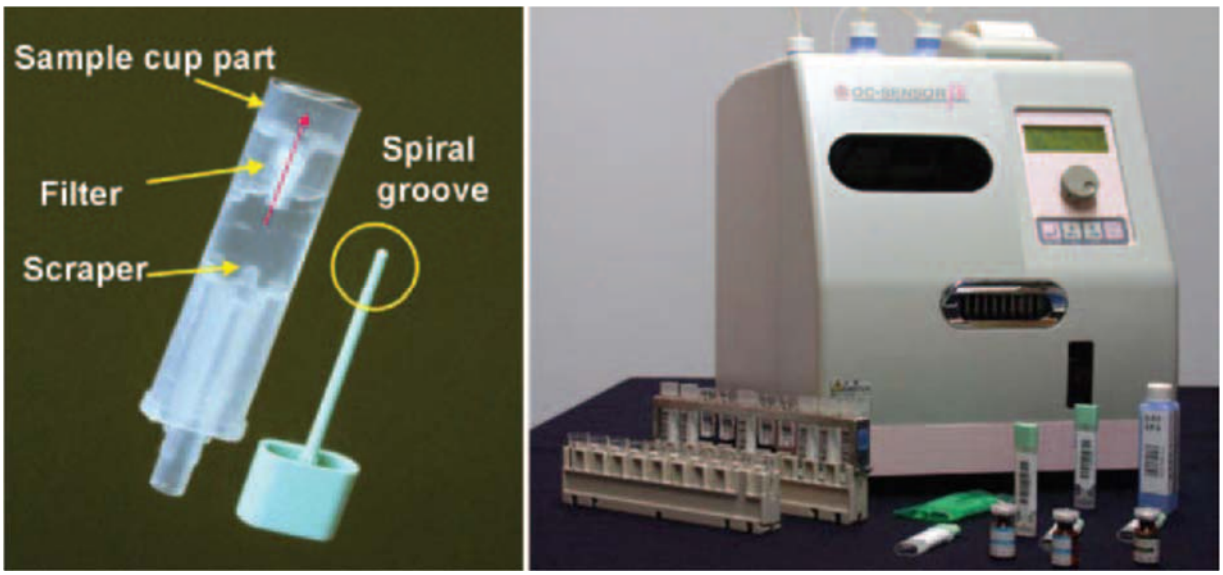

[168] *Id.* p. 2521.

[169] *Id.* pp. 2520-2521.

121. Vilkin concludes that they "found this desktop, automated-developed and quantified Hb version of the immunochemical occult blood test to provide a highly sensitive teste for detecting significant colorectal neoplasia with an acceptable specificity and consequent high negative predictive value."[170] Another important conclusion of the article is that "[t]he introduction of the instrument-developed, quantitative, fecal occult blood testing allows the physician to choose the optimal fecal Hb threshold level that triggers a follow-up colonoscopy."[171] Applying this methodology to a population of high-risk and symptomatic patients, Vilkin found that "all cases of cancer and most advanced adenomas would be detected and a negative test would provide a very high degree of certainty that there was no clinically significant colorectal neoplasia."[172]

C. Itzkowitz (EX1006)

122. Itzkowitz is a journal article published in the January, 2007 issue of the journal *Clinical Gastroenterology and Hepatology*.[173] Itzkowitz

---

[170] *Id.* p. 2524.

[171] *Id.*

[172] *Id.*

[173] Itzkowitz (EX1006) p. 117.

names several Exact employees as co-authors, including the senior author Dr. Anthony Shuber.[174] Itzkowitz further notes that the work it reports was supported by Exact.[175] The *Clinical Gastroenterology and Hepatology* web site states that Itzkowitz published on-line on December 12, 2006.[176] Confirming this on-line publication date, Exact Sciences and Mount Sinai School of Medicine issued a press release on December 13, 2006 announcing the Itzkowitz publication.[177] *Clinical Gastroenterology and Hepatology* is a well-regarded journal that is indexed on PubMed and that I consulted when doing research on CRC diagnostics. In my experience with this journal, the issue date in which the article appears is regularly provided within the journal's articles, and this date closely approximates the time when the article becomes available to the public. Itzkowitz was therefore publicly available more than a year before the Priority Date.

123. Itzkowitz is a 2007 journal article that combines detection of multiple kinds of DNA biomarkers to produce a new fecal DNA test for

---

[174] *Id.* p. 111.

[175] *Id.* p. 117.

[176] Itzkowitz Printout (EX1076).

[177] Itzkowitz Press Release (EX1077).

CRC.[178] In particular, Itzkowitz evaluates the combination of 22 sequence mutations, a four-amplicon panel for DNA instability (DIA), and methylation of promoters for two CRC-associated genes.[179] Itzkowtiz highlights several improvements over a related, prior-published assay using the same 22 mutations, referred to in the abstract and throughout as "version 1." The assay used in Itzkowitz is thus referred to as "version 2" of Exact's fecal DNA test for CRC detection.[180] This second version differs from the prior version, in part, because it "uses improved DNA stabilization/isolation techniques and a new promoter methylation marker."[181]

124. Itzkowitz describes collection of the stool sample to be tested by direct defecation into a sealable container, stating that "each subject provided a single stool sample" using "a special stool collection kit that is mounted on the toilet bowl."[182] Itzkowitz explains that "[i]mmediately after defecation, subjects added 250 mL of a DNA-stabilizing buffer to a stool

---

[178] Itzkowitz (EX1006) Abstract.

[179] *Id.* pp. 111-112.

[180] *Id.* Abstract.

[181] *Id.* Abstract.

[182] *Id.* p. 112.

specimen of at least 50 g."[183] Adding the DNA stabilizing buffer to the stool "was shown to prevent DNA degradation for several days" which improved the sensitivity of both the DNA marker panel used and the DNA integrity assay (DIA) for detecting CRC.[184] The patients shipped the stabilized stool samples to the clinical laboratory at room temperature, where they were assayed for the presence of tumor-derived DNA.[185]

125. Each of the three types of DNA biomarkers (sequence mutation, DIA, and methylation) was analyzed using distinct techniques. The sequence mutations were analyzed by a gel-based DNA capture approach with fluorescently labeled nucleotides.[186] The DNA integrity assay (DIA) was performed by real-time PCR amplifying four target loci.[187] Methylation analysis was performed by bisulfite conversion and MSP PCR.[188] Thus, the

---

[183] *Id.* p. 112.

[184] *Id.* pp. 111, 116.

[185] *Id.* p. 112.

[186] *Id.*

[187] *Id.*

[188] *Id.*

stool samples studied by Itzkowitz were divided into three portions for three separate analyses.

126. Itzkowitz articulates advantages of fecal tests where the sample is collected at home, noting the importance of "a noninvasive screening test that is convenient, safe, and easy to perform at home without bowel preparation or dietary restriction has the potential to significantly increase participation."[189] Although home tests require mailing, there are also attendant advantages because "geographic access becomes less of a barrier, there is no loss of time from work, and no formal health care visit."[190] Itzkowitz concluded that their "preliminary experience with the new fecal DNA test in which patients add stabilization buffer to stool confirms a very high degree of patient satisfaction."[191] They also concluded that the disclosed method of stabilizing DNA during specimen transport contributed to increasing assay sensitivity from 52% to 72.5%.[192]

---

[189] *Id.* p. 115.

[190] *Id.*

[191] *Id.* pp. 116-117.

[192] *Id.* p.116.

D. Kanaoka (EX1007)

127. I understand that Kanaoka is a patent application filed in 2003, which published in 2006. Kanaoka was therefore publicly available more than a year before the Priority Date. Kanaoka relates to approaches for diagnosing CRC by analyzing the RNA content of a biological sample such as stool.[193] Kanaoka specifies that the biological sample is preferably feces, and more preferably human feces, which can be "used as they are, or, in some cases, after frozen."[194] In particular, Kanaoka describes a non-invasive CRC diagnostic assay in which a stool sample is tested for the presence of COX2 RNA.[195]

128. As noted in the background, RNA is particularly susceptible to decomposition by RNA digesting enzymes (RNAses), which are "ubiquitous in all the biological samples and very stable," such that "strict control to avoid contamination of RNases is necessary in the RT-PCR method, during and after purification processes of RNA."[196] Accordingly, Kanaoka discloses

---

[193] Kanaoka (EX1007) Abstract, Claim 4.

[194] *Id.* ¶¶0040-0041.

[195] *Id.* ¶¶0021-0026, 0055-0068.

[196] *Id.* ¶0011.

that a sample can be collected, divided into separate 5 ml tubes, and then homogenized in the presence of an RNase inhibitor, such as guanidine thiocyanate.[197] RNA is extracted from the homogenized fecal sample and then reverse transcribed to make cDNA, which is amplified (e.g., using PCR) and then detected.[198] Kanaoka provides various RNA tumor markers that can be detected using the claimed method, but states that the tumor marker is preferably COX-2.[199] Kanaoka states that among the advantages of the disclosed method is that it "has a higher detection sensitivity compared to the detection of gene mutation of APC, K-ras, or p53" and "it can save largely the time and effort needed for the detection."[200]

129. Kanaoka includes a working example in which thirty stool samples from colon cancer patients and 22 stool samples from patients without colon cancer are tested for the presence of CEA and COX-2 mRNA using RT-PCR.[201] In addition, "human hemoglobin (Hb) in the feces of each

---

[197] *Id.* ¶¶0017, 0019.

[198] *Id.* ¶¶0021-0025.

[199] *Id.* ¶0044.

[200] *Id.* ¶0076.

[201] *Id.* ¶¶0056, 0063.

sample was measured by immunological fecal occult blood test."[202] Kanaoka states that "COX-2 was detected in 27 cases among the 30 colon cancer cases" while "[i]n the immunological fecal occult blood test, 23 among 28 colon cancer cases… were positive."[203] Kanaoka notes that "[a]mong three COX-2 negative colon cancer cases, one was positive in the immunological fecal occult blood test" while "COX-2 was detected in 3 among 5 colon cancer cases negative to the immunological fecal occult blood test," indicating that the combination of the two tests had a higher sensitivity than either test alone.

E. Derks (EX1008)

130. Derks is a journal article published in the 2006 issue of the journal *Cellular Oncology.*[204] *Cellular Oncology* was a well-regarded journal that is indexed on PubMed. Pubmed states that Derks was published

---

[202] *Id.* ¶0057.

[203] *Id.* ¶¶0065-0066. Kanaoka does not explain why only 28 of the colon cancer stool samples were tested using the immunological fecal occult blood test.

[204] Derks (EX1008).

online on December 12, 2006.[205] This issue of *Cellular Oncology* was date-stamped by the University of North Carolina Health Sciences Library on February 5, 2007.[206] Derks was therefore publicly available more than a year before the Priority Date.

131. Derks is a 2006 journal article that draws correlations between DNA promoter methylation, DNA mutations, and chromosome alterations that occur in the development of CRC.[207] Derks notes that "it has become clear that initiation and progression of cancer…involves epigenetic alterations such as DNA methylation and that genetic and epigenetic alterations interact in driving the development of cancer."[208] Derks therefore included examining methylation of certain gene promotors during the development of CRC.[209]

132. Derks reports that the promoters of several genes, including GATA-4, are more highly methylated in colorectal adenomas and

---

[205] Derks Web Page (EX1041).

[206] Derks (EX1008).

[207] *Id.*

[208] *Id.* p. 247.

[209] *Id.*

carcinomas than in normal tissues.[210] In particular, the GATA-4 promoter was methylated in 94.4% of carcinoma tissue, but only 16.7% of paired normal tissue.[211] Derks states that their results are "highly relevant for methylation-marker based colorectal cancer screening" and notes that "given that aberrant DNA methylation can also be detected in stool DNA, studying methylation as common event in pre-malignant lesions is promising to provide novel specific biomarkers for risk assessment and secondary prevention."[212] Overall, Derks concluded that because "promoter methylation was already present in nonprogressed adenomas without chromosomal alterations," and also preceded at least *TP53* mutation, it should be regarded as an early event in colorectal cancer development."[213]

F. Shuber (EX1009)

133. Shuber is an international patent application on which I am a named inventor. Shuber was filed by Exact in 2005, and published later that

---

[210] *Id.* Abstract.

[211] *Id.* Table 3b.

[212] *Id*. p. 255.

[213] *Id.* Abstract.

year. Shuber was therefore publicly available more than a year before the Priority Date.

134. Shuber is premised on the well-known principle that cancer can shed distinctive cellular debris and DNA into bodily samples such as stool.[214] However, DNA in stool and other samples degrade, limiting efficacy of DNA assays.[215] Shuber addresses this problem by describing a buffer that stabilizes nucleic acids in the sample, e.g., in a method for preparing a fecal sample for analysis.[216] Shuber reports that the use of such buffers provides marked advantages, such that samples "do not require refrigeration or freezing."[217] Moreover, "a stabilization solution may be particularly useful if a sample is obtained at a remote location and mailed or delivered to a testing center."[218]

135. The stabilizing buffer disclosed in Shuber is useful in many different DNA biomarker assays. As Shuber explains, a sample stabilized by

---

[214] Shuber (EX1009) 1:16-29.

[215] *Id.* 1:30-32.

[216] *Id.* 6:2-20, 7:10-21.

[217] *Id.* 7:10-21.

[218] *Id.* 10:10-15.

buffer "can be characterized in a nucleic acid integrity analysis, multiple mutation assay, or methylation study."[219] Important applications of the disclosed buffer for stabilizing DNA include detection of biomarkers related to cancer, such as CRC. Shuber states that "aspects of the invention may be particularly useful for detecting indicia of adenoma and/or early stage cancer" where "many cancers (e.g., carcinomas such as colorectal carcinomas) are thought to develop from adenomas."[220] Shuber further notes that several of the facilitated assessment of biomarkers have been used in diagnosis of CRC, including sequence mutations, DIA, and methylation.[221] Shuber also considers combining multiple assays to improve the test's sensitivity for detection of CRC, noting that "the invention may be useful to avoid or reduce the number of false negative results in a screen of a population of individuals for one or more early stage cancer (e.g., using DNA integrity assay, a multiple mutation assay, a hypermethylation assay, or any combination thereof.)"[222]

---

[219] *Id.* 8:27-31, 12:8-14, 13:21-14:16.

[220] *Id.* 28:18-27, 13:5-6.

[221] *Id.* 14:1-5, 21:12-16, 23:12-19.

[222] *Id.* 28:18-27.

136. Shuber also discusses stool collection devices, e.g., where the sample can be combined with stabilizing buffer, sealed, and shipped. Shuber states that the stool sample "may be directly deposited into a container (e.g., a sealable container) that already contains stabilization solution," or "stabilization may be added to a container when (e.g., at the same time, immediately after, or within minutes, hours or a day) a biological sample (e.g., a stool sample) is deposited in the container."[223] A POSA would understand that when a sample is a stool sample, being "directly deposited into a container" refers to direct defecation into that container, which is a standard method of collecting a fecal sample. The "container with sample and stabilization solution may be sealed for storage/shipping."[224]

VIII. OVERVIEW OF GROUNDS OF UNPATENTABILITY

137. The following table provides an overview of how the above selected references render obvious the claims of the '718 patent:

Claims	Prior Art
1-9, 11, 14-20	Lenhard, Vilkin, and Itzkowitz
12 and 13	Lenhard, Vilkin, Itzkowitz, and Kanaoka
10	Lenhard, Vilkin, Itzkowitz, and Derks
1-9, 11, 14-20	Shuber and Vilkin
12 and 13	Shuber, Vilkin, and Kanaoka

[223] *Id.* 29:8-13.

[224] *Id.* 29:18-19.

Claims	Prior Art
10	Shuber, Vilkin, and Derks

IX. THE CLAIMS OF THE ’781 PATENT ARE OBVIOUS

A. Lenhard in view of Itzkowitz and Vilkin renders claims 1-9, 11, and 14-20 obvious

138. It is my opinion that Lenhard, when considered in view of Itzkowitz and Vilkin, renders obvious the method of processing a freshly collected fecal sample recited in claims 1-9, 11, and 14-20 of the ’781 Patent. Specifically, it is my opinion that it would have been obvious for a POSA to use the iFOBT of Vilkin and the fecal collection and DNA stabilization process of Itzkowitz in the fecal screening method of Lenhard to arrive at the method of the challenged claims.

139. As discussed above in section VI(A), Lenhard discloses a method for performing a noninvasive CRC detection assay in which both DNA methylation and blood proteins are detected in a fecal sample. In the assay disclosed in Lenhard, a portion of a patient’s fecal sample is removed and tested for blood proteins using gFOBT, and then the remainder of the

sample is tested for tumor-derived DNA using methylation of the HIC1 gene promoter as a biomarker.[225]

140. A POSA would understand from the disclosure of Lenhard that combining a DNA methylation test with FOBT resulted in a diagnostic process that is more sensitive than when either test was performed alone. For example, Lenhard states that "[t]he combination of HIC1 methylation analysis with FOBT allowed for the detection of two thirds of CRCs."[226] In Table 4 Lenhard shows that whereas the HIC1 methylation test alone detected 42% of all cancers and the FOBT alone detected 35% of all cancers, the combination of the two tests detected 65% of all cancers.[227] Detecting both tumor-derived DNA and fecal blood resulted in "increased detection rates for CRCs" and, in fact "detected all localized cancers."[228]

141. Lenhard's finding that diagnostic sensitivity can be improved by combining a fecal DNA test with FOBT is consistent with what was known in the art as of the Priority Date. As I explain above, by the Priority

---

[225] Lenhard (EX1004) pp. 142, 144-145.

[226] *Id.* p. 143.

[227] *Id.* p. 146.

[228] *Id.* p. 147.

Date, it was widely understood that assay sensitivity is improved through the detection of multiple biomarkers. This is particularly true in cases like fecal DNA and FOBT, where the false-negatives missed by the two tests would not be expected to overlap. Specifically, false negatives missed in by the fecal DNA test because their carcinoma did not contain a methylated HIC1 promoter might still test positive for fecal blood, and vice-versa. In other words, combining a fecal DNA test with a FOBT is simply the obvious application of the well-established strategy of combining biomarkers to improve diagnostic assay sensitivity.

142. Lenhard discloses a method of processing a fecal sample that includes collecting a fecal sample from a subject, removing a portion of sample for blood protein testing and then testing the remaining portion of the sample for cancer-specific DNA. While Lenhard does not state that they used a buffer to prevent degradation of blood proteins in the removed portion or that a stabilizing buffer that retains DNA integrity was used in the remaining portion, use of such buffers was routine in the art by the Priority Date, such as described in Itzkowitz.

1. A POSA would be motivated to use the iFOBT of Vilkin in place of the gFOBT of Lenhard

143. In my opinion, a POSA would have found it obvious to replace the gFOBT used in Lenhard with the automated iFOBT disclosed in Vilkin,

in which a removed portion of a stool sample is stabilized in a buffer that prevents degradation of a blood protein (hemoglobin, or Hb) so it can be sent to a diagnostic laboratory for automated analysis.[229]

144. A POSA would be motivated to modify Lenhard's assay to include Vilkin's iFOBT because the advantages of automated iFOBT, like the one disclosed in Vilkin, were well known in the art by the Priority Date. In fact, Vilkin itself expressly teaches numerous advantages of using iFOBT instead of gFOBT, including that iFOBT (1) has a higher sensitivity than gFOBT, (2) eliminates the need for the diet restrictions associated with gFOBT, and (3) is quantitative, which allows a physician to choose the optimal fecal Hb threshold level for a patient.[230] Thus, a POSA would recognize Vilkin's iFOBT as a superior alternative to the gFOBT used in Lenhard.

145. Even beyond the express teachings of Vilkin, the advantages of iFOBT over gFOBT were well recognized in the art by the Priority Date. For example, Young, a 2007 review article, explains that iFOBT technology "simplifies the testing process, removes the need for diet and drug

---

[229] Vilkin (EX1005) pp. 2519-2520.

[230] *Id.* pp. 2519, 2524.

restrictions, provides for preferred and more acceptable stool-sampling methods such as brushes or probes rather than a wooden spatula, and is achieved while collecting fewer fecal samples."[231] It also explains that iFOBT "provide for an improved sensitivity/specificity ratio; in other words, they can achieve better sensitivity without an unacceptable deterioration in specificity."[232] Young concludes that "[o]bviously, [iFOBT assays] overcome most of the disadvantages presented by GFOBT, are superior to GFOBT in terms of participation as well as performance and should replace GFOBT in two-step screening."[233]

146. Guittet, another 2007 paper, directly compares iFOBT with gFOBT, and notes that "[e]vidence in favor of the substitution of G-FOBT by I-FOBT is increasing, the gain being more important for high risk adenomas than for cancers."[234] Guittet also notes that "[t]he automated

---

[231] Young 2007 (EX1024) p. 29.

[232] *Id.*

[233] *Id.* p. 30.

[234] Guittet (EX1010) Abstract.

reading technology allows choice of the positivity rate associated with an ideal balance between sensitivity and specificity."[235] Guittet concludes:

> Evidence in favour of the use of the I-FOBT over the G-FOBT is increasing. I-FOBT tests have no dietary or medication restrictions. These tests have superior sensitivity and specificity, the gain being more important for high risk adenomas than for cancers. They also have a higher compliance rate and the automated reading technology allows the choice of the ideal positivity rate. **As suggested in recent reviews, it is time to give colorectal cancer screening a new future by using I-FOBT instead of G-FOBT**.[236]

147. Thus, based on the express teachings of Vilkin and the general knowledge in the art, a POSA would have been motivated to modify the diagnostic assay disclosed in Lenhard by replacing the gFOBT with the superior automated iFOBT of Vilkin, including its use of a stabilization buffer to permit at-home collection and shipment of the sample to a diagnostic laboratory.

---

[235] *Id.* Abstract.

[236] *Id.* p. 214.

2. A POSA would have been motivated to use the sample collection methodology of Itzkowitz in Lenhard's process

148. A POSA would have been motivated to improve Lenhard's diagnostic assay by collecting the stool sample by direct defecation into a sealable container followed by addition of a DNA stabilizing buffer prior to its shipment to a diagnostic laboratory, as was done in Itzkowitz.[237]

149. Lenhard does not explain how its samples were collected beyond stating that "[s]tool samples were collected before cathartic preparation for scheduled surgery or colonoscopy."[238] However, a POSA would recognize that directly defecating into a sealable container, as was done in Itzkowitz, was a common and practical collection method that would be obvious to use in Lenhard's assay.[239]

150. By the priority date, fecal collection by direct defecation into a sealable container was a standard and well-accepted method of fecal sample collection for decades. Advantageously, such a method allows for the collection and shipment of a large portion of the stool sample for testing at a diagnostic laboratory. Using the original container to hold at least a portion

---

[237] Itzkowitz (EX1006) p. 112.

[238] Lenhard (EX1004) p. 143.

[239] Itzkowitz (EX1006) p. 112.

of the fecal sample has the added advantage of reducing the amount of fecal manipulation that the patient has to do.

151. Indeed, by the Priority Date, direct defecation into a sealable container had been a standard method for collecting stool samples for decades. For example, a laboratory manual from 1985 recommends collecting fecal samples in a sealable container and that "[f]eces should be passed directly into the container."[240] Similarly, in a patent filed by Exact in 1994, Exact states that "[t]he receptacle, whether adapted to fit a toilet or simply adapted for receiving the voided stool sample should include sealing means sufficient to contain the voided stool sample and any solution added thereto and to prevent the emanation of odors."[241]

152. A POSA would therefore be motivated to have a patient collect the fecal sample analyzed in Lenhard by directly defecating into a sealable container at least because it was a routine, convenient and well-established method for at-home fecal sample collection.

---

[240] Melvin (EX1026) p. 2.

[241] Lapidis '650 (EX1028) 7:45-49, Figure 2.

3. A POSA would have been motivated to use the DNA stabilizing buffer of Itzkowitz in Lenhard's process

153. Once the sample was collected, a POSA would have been motivated by Itzkowitz's teachings to add a stabilization buffer to the sample so it can be shipped to a diagnostic laboratory without freezing.[242]

154. As explained above in section IV(A)4, by the Priority Date, use of stabilizing buffer to reduce DNA degradation during shipment of stool samples was routine. For example, Itzkowitz states that addition of the DNA stabilizing buffer to the stool "was shown to prevent DNA degradation for several days" which improved the sensitivity of both the DNA marker panel used and the DNA integrity assay (DIA) for detecting CRC.[243] Itzkowitz states that their "preliminary experience with the new fecal DNA test in which patients add stabilization buffer to stool confirms a very high degree of patient satisfaction."[244]

155. Consistent with Itzkowitz's teachings, by the Priority Date the advantages of using a stabilization buffer that preserves DNA integrity of stool samples were well recognized in the art. In particular, Olson, a 2005

---

[242] Itzkowitz (EX1006) p. 112.

[243] *Id.* pp. 111, 116.

[244] *Id.* pp. 116-117.

paper cited by Itzkowitz on which I am a co-author, explains that "one of the central challenges [of DNA-based CRC assays] is to preserve the integrity of human DNA in the hostile stool environment, particularly during sample transport, to recover, amplify, and interrogate the DNA for known cancer-related abnormalities."[245] Olson states that "to maximize clinical sensitivity of fecal DNA assays, it is important to maximize he recovery of otherwise scarce amounts of human DNA."[246] Olson concludes that "addition of stabilization buffer to samples upon collection should provide a robust means of storing (and transporting) samples at room temperature."[247]

156. Similarly, Shuber, a patent application on which I am an inventor and that published in 2005, describes a fecal DNA analysis method in which a stool sample is "directly deposited into a container (e.g., a sealable container)" to which the "stabilizing solution may be added."[248] The stabilizing solution is added to a stool sample "to preserve a sample for analysis using a nucleic acid integrity assay along with a mutation detection

---

[245] Olson (EX1025) p. 186.

[246] *Id.* p. 190.

[247] *Id.*

[248] Shuber (EX1009) 29:8-19.

assay (e.g., a multiple mutation panel assay), a hypermethylation assay, or both."[249] The "container with sample and stabilization solution may be sealed for storage/shipping."[250] Shuber emphasizes that "[m]ethods of the invention do not require refrigeration or freezing."[251] Shuber therefore further supports that use of DNA stabilizing buffer to preserve nucleic acids in fecal samples was well established in the art by the Priority Date.

157. Lenhard itself also notes that the MSP assay failed on three samples, and that this may have been due to the "amount and quality of extracted and converted DNA."[252] One of skill in the art would recognize that use of a stabilizing buffer, such as the one disclosed in Itzkowitz, would improve both the amount and the quantity of the DNA extracted from fecal samples. Accordingly, a person of skill in the art would be further motivated to use such a buffer to preserve the portion of the sample used in the DNA methylation analysis in Lenhard.

---

[249] *Id.* 7:19-21.

[250] *Id.* 29:8-19.

[251] *Id.* 7:12-15.

[252] Lenhard (EX1004) p. 147.

158. A POSA would therefore be motivated to use the sample collection and DNA stabilization methods described in Itzkowitz in Lenhard's assay to maintain DNA integrity in the remaining portion of the fecal sample, allowing it to be shipped to the diagnostic laboratory at room temperature.

159. In summary, as of the Priority Date, a POSA would have been motivated to modify the non-invasive CRC diagnostic method of Lenhard by replacing the gFOBT with the automated iFOBT of Vilkin and using the stool collection and stabilization methods of Itzkowitz. The result of these obvious improvements would be a method for processing a freshly-collected fecal sample in which a patient defecates directly into a sealable container (as described in Itzkowitz), removes a portion of the stool sample and combines it with a buffer that stabilizes blood proteins in a separate sealable container (as described in Vilkin), and then adds DNA stabilization buffer to the remaining fecal sample before sealing the original sealable container (as described in Itzkowitz). The patient would then send both sealed containers to a diagnostic laboratory for analysis of DNA methylation and FOBT, which Lenhard teaches provides improved assay sensitivity compared to either test alone.

160. A POSA would recognize that separation of the sample by the patient at home is necessary to ensure that the relevant biomarker in each portion (hemoglobin in one, DNA in the other) was stabilized with an appropriate buffer prior to shipment, as taught by Vilkin and Itzkowitz.[253] A POSA would also recognize that it is more convenient for the patient to use the Vilkin sampling device before the fecal sample is immersed in the DNA stabilizing buffer of Itzkowitz.

161. It is also my opinion that one of skill in the art would have a reasonable expectation that the resulting assay would be successful at least because it amounts to no more than the routine performance, in combination, of two well-established and prior art tests that have already been shown to work on fecal samples.

162. As set forth below, the above-described assay rendered obvious by Lenhard in view of Itzkowitz and Vilkin meets all limitations of claims 1-9, 11 and 14-20 of the ’781 patent.

4. Claim 1

163. Claim 1 of the ’781 patent is directed to the routine separation of a fecal sample into two portions in order to permit two standard

[253] Vilkin (EX1005), p. 2520; Itzkowitz (EX1006) p. 112.

diagnostic tests—one detecting blood proteins and the other detecting nucleic acids—to be performed on the sample. Each portion is preserved in a well-established prior art stabilizing buffer. Nothing in this claim is inventive. The method of claim 1 amounts to no more than the routine use of standard methods to prepare a fecal sample for performance of well-established complementary diagnostic assays, and therefore was obvious.

a. "A method of processing a freshly-collected fecal sample without freezing, the method comprising:"

164. I understand that in patent law the preamble of a claim may or may not be limiting. To the extent the preamble of claim 1 is limiting, it is rendered obvious by Lenhard in view of Vilkin and Itzkowitz.

165. Specifically, when the diagnostic assay of Lenhard is improved by the obvious incorporation of the sample collection stabilization method of Itzkowitz and the iFOBT of Vilkin, as described above, the resulting assay produces two samples: a "removed portion" in a blood protein stabilizing buffer that is "kept in the refrigerator until returned to the developing laboratory where they are also kept at 4°C until development,"[254] and a

[254] Vilkin (EX1005) p. 2520.

"remaining portion" in a DNA stabilizing buffer that is "shipped at room temperature overnight."[255]

166. Thus, a person of ordinary skill in the art would understand based on the teachings of Vilkin and Itzkowitz that both portions of the fecal sample would be shipped to the diagnostic laboratory without freezing. Consistently, I note that even in Lenhard the fecal sample was received by the diagnostic laboratory and partitioned for DNA methylation and FOBT testing before it was frozen. One of skill in the art would appreciate that partitioning of the sample into the appropriate stabilization buffers prior to transport, such as those disclosed in Itzkowitz and Vilkin, would have improved DNA and protein stability in the respective portions of the sample and, as a consequence, likely improved the performance of Lenhard's assay.

167. Accordingly, both Vilkin and Itzkowitz teach processing fecal samples without freezing, which would also be a feature of the fecal sample processing method rendered obvious by Lenhard in view of Vilkin and Itzkowitz.

b. "a) collecting a fecal sample from a human subject, wherein the fecal sample is collected at home by the human subject by defecation directly into a sealable collection vessel;"

[255] Itzkowitz (EX1006) p. 112.

168. Collecting a fecal sample from a subject is disclosed by each of Lenhard, Vilkin and Itzkowitz, and also rendered obvious by the three references. Indeed, collecting a fecal sample from a human subject is a prerequisite for performing the diagnostic assays disclosed in all three references. The method of processing a fecal sample rendered obvious by Lenhard in view of Vilkin and Itzkowitz would therefore also include such a step.[256]

169. As explained above, Itzkowitz describes sample collection by a patient directly defecating into a sealable container at home, stating that "[s]ubjects were given detailed instructions and a special stool collection kit that is mounted on the toilet bowl" to which DNA-stabilizing buffer was added following defecation.[257] As the sample was subsequently "shipped at room temperature," to the diagnostic laboratory, a POSA would understand that the sample was collected at home and that the container into which the

[256] Lenhard (EX1004) p. 143; Vilkin (EX1005) p. 2520; Itzkowitz (EX1006) p. 112.

[257] Itzkowitz (EX1006) p. 112.

stool sample and DNA-stabilizing buffer was added must have been sealable.[258]

170. By the Priority Date, it was recognized that sample collection is preferably completed by patients at home. Indeed, Itzkowitz notes importance of "a noninvasive screening test that is convenient, safe, and easy to perform at home without bowel preparation or dietary restriction has the potential to significantly increase participation."[259] Although home tests require mailing, there are also attendant advantages because "geographic access becomes less of a barrier, there is no loss of time from work, and no formal health care visit."[260]

171. Indeed, by the Priority Date, direct defecation into a sealable container at home had been a standard method for collecting stool samples for decades. A laboratory manual from 1985 recommends collecting fecal samples in a sealable container and that "[f]eces should be passed directly into the container."[261] Similarly, a patent filed by Exact in 1994, Exact states

---

[258] Itzkowitz (EX1006) p. 112.

[259] *Id.* p. 115.

[260] *Id.*

[261] Melvin (EX1026) p. 2.

that "[t]he receptacle, whether adapted to fit a toilet or simply adapted for receiving the voided stool sample should include sealing means sufficient to contain the voided stool sample and any solution added thereto and to prevent the emanation of odors."[262] By the Priority Date, Exact offered a commercial fecal DNA test that used direct defecation into a sealable container at home as the method by which the stool sample was collected.

172. Accordingly, by the Priority Date, a POSA would have recognized direct defecation into a sealable collection vessel described in Itzkowitz, as a routine and convenient stool collection method that would be used in the method of processing a fecal sample rendered obvious by Lenhard in view of Vilkin and Itzkowitz.[263]

c. "b) removing a portion of the fecal sample to a separate sealable container to produce a removed portion and a remaining portion of the fecal sample;"

173. As I explain above in section VII(A), Lenhard describes an assay in which a portion of a patient's stool sample removed and tested for the presence of blood proteins using gFOBT and then the remainder of the

[262] Lapidis '650 (EX1028) 7:45-49, Figure 2.

[263] Itzkowitz (EX1006) p. 112.

sample is tested for the presence of tumor-derived DNA.[264] Lenhard therefore discloses removing a portion of the fecal sample to produce a removed portion and a remaining portion of the fecal sample, but does not expressly state that the removed portion was removed to a separate sealable container.

174. However, as I discuss above, it would have been obvious to replace the gFOBT described in Lenhard with the automated iFOBT of Vilkin at least because of the numerous advantages to iFOBT over gFOBT taught in Vilkin and known in the art.[265]

175. In the iFOBT described in Vilkin, a portion of the fecal sample is removed using a "fecal test device" that is shaped like a small test tube that has a probe with a serrated tip attached to the inner portion of the device's cap (illustrated below).[266] The probe is "poked into the stool and then pushed back into the tube, past a scraper and through a membrane into the sample cup."[267] This results in sealing of the fecal test sampling device

---

[264] Lenhard (EX1004) p. 143-145.

[265] Vilkin (EX1005) p. 2519.

[266] *Id.* p. 2520.

[267] *Id.*

with the tip of the probe being in a closed amount of hemoglobin stabilizing buffer.[268]

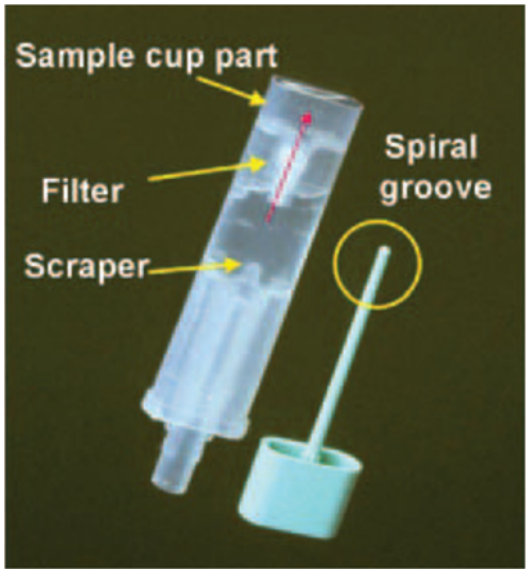

176. Accordingly, when the gFOBT of Lenhard is replaced with the automated iFOBT of Vilkin the resulting assay includes removing a portion of the fecal sample to a separate sealable container to produce a removed portion and a remaining portion of the fecal sample.

d. "c) combining the removed portion of the fecal sample in the separate sealable container with a buffer that prevents denaturation or degradation of blood proteins found in a fecal sample, and sealing the sealable container; and"

177. As I explain above, it would have been obvious to replace the gFOBT described in Lenhard with the automated iFOBT of Vilkin at least

[268] *Id.* p. 2520.

because of the recognized advantages of iFOBT.[269] In the iFOBT described in Vilkin, a probe attached to the cap of the "fecal test sampling device" is "poked into the stool and then pushed back into device, past a scraper and through a membrane into the sample cup."[270] This results in sealing of the fecal test sampling device with the tip "put in a closed amount of Hb stabilizing buffer."[271] Vilkin teaches that when the samples are in this buffer they "maintained their elevated fecal Hb levels for 21 or more days" when stored at 4°C.[272]

178. Accordingly, when the gFOBT of Lenhard is replaced with the automated iFOBT of Vilkin the resulting assay includes combining the removed portion of the fecal sample in the separate sealable container with a buffer that prevents denaturation or degradation of blood proteins found in a fecal sample, and sealing the sealable container.

e. "d) combining the remaining portion of the fecal sample in the sealable collection vessel with a stabilizing buffer, and sealing the collection vessel"

---

[269] *Id.* p. 2519.

[270] *Id.* p. 2520.

[271] *Id.*

[272] *Id.* p. 2521.

179. The above-described method of processing a fecal sample rendered obvious by Lenhard in view of Vilkin and Itzkowitz also includes combining the remaining portion of the fecal sample in the sealable collection vessel with a stabilizing buffer, and sealing the collection vessel.

180. As I explain above, a POSA would have been motivated to use the DNA stabilizing buffer described in Itzkowitz to preserve the DNA in the remaining portion of the fecal sample generated according to Lenhard to preserve the integrity of the DNA in that portion of the sample when it is shipped a diagnostic laboratory for analysis.[273] Itzkowitz states that addition of the DNA stabilizing buffer to the stool "was shown to prevent DNA degradation for several days" which improved the sensitivity of both the DNA marker panel used and the DNA integrity assay (DIA) for detecting CRC.[274] The DNA stabilizing buffer used in Itzkowitz was known to maintain DNA stability in the sample at room temperature for several days, thereby facilitate at-home sample collection by greatly simplifying transport of the sample.[275] Itzkowitz states that their "preliminary experience with the

---

[273] Itzkowitz (EX1006) p. 112.

[274] *Id.* pp. 111, 116.

[275] Olson (EX1025) p. 190.

new fecal DNA test in which patients add stabilization buffer to stool confirms a very high degree of patient satisfaction."[276] As Itzkowitz teaches that inclusion of a DNA stabilizing buffer resulted in an improved "second-generation fecal DNA test," it would have been obvious to use this known approach to similarly improve the DNA test used in Lenhard in the same way.[277]

181. A POSA would also understand that the collection vessel containing the remaining portion of the fecal sample and the DNA stabilizing buffer would be sealed prior to shipping so that the sample is contained and emanation of odors is prevented.[278]

182. Accordingly, when the DNA stabilizing buffer used in Itzkowitz is incorporated into the assay of Lenhard it results in a method that includes combining the remaining portion of the fecal sample in the sealable collection vessel with a stabilizing buffer, and sealing the collection vessel.

183. In summary, when the automated iFOBT and sample stabilization of Vilkin and the fecal collection and DNA stabilization process

---

[276] Itzkowitz (EX1006) pp. 116-117.

[277] *Id.* pp. 111-112.

[278] Lapidis '650 (EX1028) 7:45-49.

of Itzkowitz are incorporated into the diagnostic method of Lenhard it results in a method in which each of the steps of claim 1 is performed. The method of claim 1 would therefore be obvious to a person of skill in the art.

5. Claim 2: "The method of claim 1, further comprising delivering the sealable container containing the removed portion of the fecal sample and said buffer and the sealable collection vessel containing the remaining portion of the fecal sample and said stabilizing buffer to a medical diagnostics laboratory"

184. The above-described method of processing a fecal sample rendered obvious by Lenhard in view of Vilkin and Itzkowitz includes delivering the sealed containers containing the removed portion and remaining portion of the fecal sample to a medical diagnostics laboratory.

185. In particular, the DNA methylation assays disclosed in Lenhard and Itzkowitz and the automated iFOBT disclosed in Vilkin are each complicated molecular biology assays requiring specialized equipment and expertise. At-home performance of such assays is therefore not practical (and probably not even possible). At the same time, most patients prefer the convenience and privacy afforded by at-home collection of fecal samples. As such, a person of skill in the art would recognize that the portions of fecal samples in their respective stabilizing buffer that were collected at home according to the methods of Itzkowitz and Vilkin would be delivered to a medical diagnostics laboratory for analysis.

186. Indeed, all three references include delivery of fecal samples to a medical diagnostics laboratory for testing and, as such, render this step obvious.[279]

6. Claim 3

187. As I explain below, claim 3 is directed to the performance of standard and routine assays on the portions of a fecal sample collected in claim 1. The method therefore amounts to no more than the routine use of standard diagnostic assays fecal samples that had been prepared using standard methodology, and is therefore obvious.

a. "A method of processing a fecal sample, the method comprising:"

188. To the extent the preamble of claim 3 is limiting, it is rendered obvious by Lenhard in view of Vilkin and Itzkowitz. All three references are directed to methods of processing fecal samples.[280]

b. "a) obtaining a pair of portions of a fecal sample collected from a human subject, the pair of portions comprising: i) a sealed sealable container containing a removed portion of a fecal sample and a buffer; and ii) a sealed sealable collection vessel containing a remaining

---

[279] Lenhard (EX1004) p. 143; Vilkin (EX1005) p. 2520; Itzkowitz (EX1006) p. 112.

[280] Lenhard (EX1004); Vilkin (EX1005); Itzkowitz (EX1006).

portion of a fecal sample and a stabilizing buffer, the pair of portions obtained by the method of claim 1;"

189. As discussed above, the method of processing a fecal sample rendered obvious by Lenhard in view of Vilkin and Itzkowitz includes the receipt of the sealed containers containing the removed portion and remaining portion of the fecal sample by technicians at medical diagnostics laboratory, where the portions of the sample are then analyzed.

190. The DNA methylation assays disclosed in Lenhard and Itzkowitz and the automated iFOBT disclosed in Vilkin are each complicated molecular biology assays requiring specialized equipment and expertise. At-home performance of such assays is therefore not practical (and probably not even possible). At the same time, most patients prefer the convenience and privacy afforded by at-home collection of fecal samples. As such, a person of skill in the art would recognize that the portions of fecal samples in their respective stabilizing buffer that were collected at home according to the methods of Itzkowitz and Vilkin would be delivered to a medical diagnostics laboratory for analysis.

191. All three references include delivery of fecal samples to a medical diagnostics laboratory for testing and, as such, render the step of obtaining such samples by the technicians at the laboratory obvious.

c. "b) testing the removed portion of the fecal sample for an amount of blood protein present in the removed portion;"

192. As explained above, it would have been obvious to replace the gFOBT described in Lenhard with the automated iFOBT of Vilkin at least because of the numerous known advantages of using the iFOBT.[281] Vilkin teaches numerous advantages of using iFOBT instead of gFOBT, including that iFOBT (1) has a higher sensitivity than gFOBT, (2) eliminates the need for the diet restrictions associated with gFOBT, and (3) is quantitative, which allows a physician to choose the optimal fecal Hb threshold level for a patient.[282] Such advantages were well recognized in the art by the Priority Date.

193. The Vilkin iFOBT is a quantitative test of the level of the human blood protein, hemoglobin (Hb), in a removed portion of a stool sample.[283] The quantitative nature of Vilkin's assay is reflected in Table 1, which provides the hemoglobin levels of fecal samples from individuals having different CRC diagnoses (copied below).

---

[281] Vilkin (EX1005) p. 2519.

[282] *Id.* pp. 2519, 2524.

[283] *Id.* pp. 2519, 2522.

Table 1. Fecal Occult Blood Levels Detected According to Colonoscopy and Pathology Findings

Diagnosis	No.	Fecal Hb (ng/mL) (Mean ± SD)	Significance*
Normal†	381	29.1 ± 103.8	
Adenomas			
All	113	231.9 ± 567.5	NS
Non-AAP	85	58.0 ± 156.5	NS
AAP	28	759.8 ± 935.7	$P < 0.01$
Cancer	6	1154.3 ± 793.0	$p < 0.01$
CRC + AAP	34	829.4 ± 913.8	$p < 0.01$

AAP = advanced adenomatous polyps; CRC = colorectal cancer.
* As compared to the normal group.
† Includes 64 patients with only hyperplastic polyps.

194. Thus, when the gFOBT of Lenhard is replaced with the automated iFOBT of Vilkin the resulting assay therefore includes testing of the removed portion of the sample for an amount of blood protein in that portion.

d. "c) extracting nucleic acid from the remaining portion of the fecal sample;"

195. Performance of fecal DNA analysis typically requires extraction of the DNA from other components in the fecal sample prior to DNA analysis. Consistently, performance of the DNA methylation assay described in Lenhard includes isolation of DNA from the remaining portion of the stool sample ("DNA was isolated using the QiaAmp DNA Stool Mini-Kit (Qiagen, Hilden, Germany) according to the manufacturer's

instructions.”).[284] Extraction of DNA from the stool sample is a standard step performed when a stool sample is tested for DNA. Similarly, Itzkowitz extolls the advantages of an “enhanced DNA extraction” process on fecal DNA tests.[285]

196. Extracting nucleic acid from the remaining portion of the fecal sample is therefore performed in both Lenhard and Itzkowitz and therefore would also be included in the method rendered obvious by Lenhard in view of Vilkin and Itzkowitz.

e. “d) testing the nucleic acid for an amount of a human nucleic acid”

197. Performance of the DNA methylation assay described in Lenhard includes testing the remaining portion of the fecal sample for an amount of methylated HIC1 promoter DNA (“[w]e show that HIC1 promoter methylation can be detected frequently and with high specificity in stool samples from patients with CRCs.”).[286] Likewise, the second-generation stool DNA test described in Itzkowitz tests the fecal sample for the presence of long DNA using a DNA integrity assay (DIA) and an

[284] Lenhard (EX1004) p. 143.

[285] Itzkowitz (EX1006) p. 112.

[286] Lenhard (EX1004) p. 144.

amount of methylated vimentin DNA using a methylation assay.[287] Accordingly, testing the nucleic acid for an amount of a human nucleic acid is performed in both Lenhard and Itzkowitz and would also be included in the method rendered obvious by Lenhard in view of Vilkin and Itzkowitz.

198. In view of the above, when the automated iFOBT of Vilkin and the fecal collection and DNA stabilization process of Itzkowitz are incorporated into the diagnostic method of Lenhard it results in a method in which each of the steps of claim 3 are performed, rendering the claim obvious.

7. Claim 4: "The method of claim 3, wherein testing the nucleic acid comprises determining expression from a human gene."

199. Claim 4 recites that the assay include "determining expression from a human gene." Based on the language of claims 5 and 6, the process of "determining expression of a human gene," recited in claim 4 must at least include indirect methods of detecting whether a gene is expressed, such as the testing for the presence of human DNA having an epigenetic modification, as recited in claim 5, including by measuring an amount of

[287] Itzkowitz (EX1006) p. 112.

methylated human DNA, as recited in claim 6. Both claims 5 and 6 depend on claim 4. I understand that dependent claims narrow claim 4's scope.

200. Consistent with this understanding, the '781 patent defines "epigenetic modification" as including any alteration in the DNA, **generally resulting in diminished gene expression**, which is mediated by mechanisms other than alterations in the primary nucleotide sequence of a gene."[288] In fact, the only mention of looking at gene expression in the disclosure of the '781 patent is in reference to using it as an indication of gene hypermethylation.[289]

201. The fecal DNA assay disclosed in Lenhard includes testing of the remaining portion of the fecal sample for the presence of methylated human DNA ("[w]e show that HIC1 promoter methylation can be detected frequently and with high specificity in stool samples from patients with CRCs."), and therefore includes determining expression from a human gene in that portion of the sample.[290] Lenhard explains that "[m]ethylation of CpG islands of promoters leads to silencing of transcription of the affected

---

[288] '781 Patent (EX1001) 12:35-39 (emphasis added).

[289] *Id.* 13:4-33.

[290] Lenhard (EX1004) p. 144.

gene."[291] Similarly, Itzkowitz discloses testing for methylation of the vimentin gene.[292]

202. Accordingly, testing for expression from a human gene, as the term is used in the '781 patent, is performed in both Lenhard and Itzkowitz and would also be included in the method rendered obvious by Lenhard in view of Vilkin and Itzkowitz, rendering claim 4 obvious.

8. Claim 5: "The method of claim 4, wherein determining expression from the human gene comprises testing the nucleic acid for the presence of human DNA having an epigenetic modification."

203. As discussed above, the DNA assay disclosed in Lenhard includes testing the remaining portion of the stool sample for methylated HIC1 promoter.[293] HIC1 promotor methylation is an epigenetic marker ("The epigenetic marker HIC1 promoter methylation carries high potential for the remote detection of CRCs.").[294] The stool DNA assay disclosed in

---

[291] *Id.* p. 142.

[292] Itzkowitz (EX1006) p. 111.

[293] Lenhard (EX1004) p. 144.

[294] *Id.* p. 142.

Itzkowitz also includes testing an epigenetic marker—the methylation of the vimentin gene.[295]

204. Accordingly, testing for expression from a human gene by detecting an epigenetic marker is performed in both Lenhard and Itzkowitz and would also be included in the method rendered obvious by Lenhard in view of Vilkin and Itzkowitz, rendering claim 5 obvious.

9. Claim 6: "The method of claim 5, wherein testing the nucleic acid for the presence of human DNA having an epigenetic modification comprises measuring an amount of a methylated human DNA."

205. As I explain above, the assay disclosed in Lenhard includes testing the remaining portion of the stool sample for methylated HIC1 promoter DNA[296], while the assay disclosed in Itzkowitz includes testing for vimentin gene methylation.[297]

206. Accordingly, testing for expression from a human gene by measuring an amount of methylated human DNA is performed in both Lenhard and Itzkowitz and would also be included in the method rendered

[295] Itzkowitz (EX1006) p. 111.

[296] Lenhard (EX1004) p. 144.

[297] Itzkowitz (EX1006) p. 111.

obvious by Lenhard in view of Vilkin and Itzkowitz, rendering claim 6 obvious.

10. Claim 7: "The method of claim 5, wherein the epigenetic modification comprises aberrant methylation."

207. The '781 patent defines aberrant methylation as at least including hypermethylation ("aberrant methylation, which may be referred to as hypermethylation of the gene or genes is detected.").[298] The assay disclosed in Lenhard includes testing the remaining portion of the stool sample for hypermethylated HIC1 promoter DNA.[299] Indeed, HIC1 stands for "hypermethylated in cancer 1" and is "the first gene cloned based on the finding of CpG hypermethylation in cancer."[300] HIC1 promotor methylation is also aberrant in that it is methylated in CRC cells but typically is not methylated in healthy cells. Similarly, the assay Itzkowitz includes testing for vimentin gene hypermethylation.[301]

208. Accordingly, testing for expression from a human gene by detecting aberrant methylation is performed in both Lenhard and Itzkowitz

---

[298] '781 patent (EX1001) 12:47-49.

[299] Lenhard (EX1004) p. 142.

[300] *Id.* p. 143.

[301] Itzkowitz (EX1006) p. 115.

and would also be included in the method rendered obvious by Lenhard in view of Vilkin and Itzkowitz, rendering claim 7 obvious.

11. Claim 8: "The method of claim 7, wherein the aberrant methylation comprises hypermethylation"

209. As I explain above, the assays disclosed in both Lenhard and Itzkowitz include detection of hypermethylated DNA.[302]

210. Accordingly, testing for expression from a human gene by detecting hypermethylation is performed in both Lenhard and Itzkowitz and would also be included in the method rendered obvious by Lenhard in view of Vilkin and Itzkowitz, rendering claim 8 obvious.

12. Claim 9: "The method of claim 7, wherein the human DNA having an epigenetic modification comprises a gene and/or a promoter region of a gene."

211. As I explain above, the assay disclosed in Lenhard includes testing the remaining portion of the stool sample for the presence of HIC1 promoter methylation (an epigenetic modification to a promoter region of a gene), while the assay of Itzkowitz includes testing for vimentin gene methylation (an epigenetic modification to a gene).[303]

---

[302] Lenhard (EX1004) p. 142; Itzkowitz (EX1006) p. 115.

[303] *Id.*

212. Accordingly, testing for an epigenetic modification in a gene and/or a promoter region of a gene is performed in both Lenhard and Itzkowitz and would also be included in the method rendered obvious by Lenhard in view of Vilkin and Itzkowitz, rendering claim 10 obvious.

13. Claim 11: "The method of claim 5, wherein testing the nucleic acid for presence of human DNA having an epigenetic modification comprises modifying the nucleic acid with bisulfate ions under conditions wherein unmethylated cytosine is converted to uracil."

213. As I explain above, it is likely this claim contains a typographical error and is meant to cover the use of bisulfite ions and not bisulfate ions. In particular, I am not aware of a test for an epigenetic modification that uses bisulfate ions and there is no disclosure in the specification of the use of bisulfate ions.

214. Assuming that claim 11 does, indeed, contain such a typographical error, it is rendered obvious by Lenhard, Itzkowitz and Vilkin. Specifically, the assay disclosed in Lenhard includes testing the remaining portion of the stool sample for HIC1 promoter methylation, while the stool DNA test of Itzkowitz also includes the testing for vimentin gene methylation.[304] In both cases, the DNA methylation is detected using

[304] *Id.*.

"bisulfite conversion," a process in which bisulfite ions are used to convert unmethylated cytosine to uracil.[305] Bisulfite conversion was, in fact, the standard method of testing for DNA methylation as of the Priority Date.

215. Accordingly, bisulfite conversion is used in both Lenhard and Itzkowitz and would also be included in the method rendered obvious by Lenhard in view of Vilkin and Itzkowitz, rendering claim 11 obvious.

14. Claim 14: "The method of claim 3, wherein testing for an amount of blood protein in the removed portion comprises testing for a concentration of hemoglobin in the removed portion."

216. As I explain above, it would have been obvious to a person of skill in the art to replace the gFOBT described in Lenhard with the automated iFOBT of Vilkin at least because of the numerous known advantages of using the iFOBT.[306] The Vilkin iFOBT tests for a concentration of hemoglobin in the removed portion of the fecal sample.[307]

217. Accordingly, the method of processing a fecal sample rendered obvious by Lenhard in view of Vilkin and Itzkowitz includes the testing for a concentration of hemoglobin, rendering claim 14 obvious.

---

[305] Lenhard (EX1004) p. 144; Itzkowitz (EX1006) p. 112.

[306] Vilkin (EX1005) p. 2519.

[307] *Id.* pp. 2519, 2522, Table 1.

15. Claim 15: "The method of claim 14, wherein the testing for the concentration of hemoglobin comprises immunochemical detection of hemoglobin."

218. As I explain above, it would have been obvious to replace the gFOBT described in Lenhard with the automated iFOBT of Vilkin.[308] The assay disclosed in Vilkin is an "immunochemical human Hb [hemoglobin] FOBT" that uses an immunochemical process to detect hemoglobin.[309]

219. Accordingly, the method of processing a fecal sample rendered obvious by Lenhard in view of Vilkin and Itzkowitz includes immunochemical detection of hemoglobin, rendering claim 15 obvious.

16. Claims 16-20: "The method of claim 14, wherein the removed portion of the fecal sample is considered positive for the presence of blood when the concentration of hemoglobin detected in the removed portion is at least [5, 10, 20, 50, or 200] ng/ml."

220. Claims 16-20 each depend on claim 14 and recite a particular threshold hemoglobin concentration used when determining whether the removed portion of the fecal sample is considered positive for the presence of blood. Each of claims 16-20 is rendered obvious by Lenhard in view of Vilkin and Itzkowitz because selecting any of the claimed hemoglobin

---

[308] *Id.* p. 2519.

[309] *Id.* pp. 2519, 2520-2521.

thresholds would have been a matter of routine optimization of a result-effective variable, which I understand can be a basis of obviousness.

221. Vilkin explains that one of the advantages of its test is that such "instrument-developed, quantitative, fecal occult blood testing allows the physician to choose the optimal fecal Hb threshold level that triggers a follow-up colonoscopy."[310] Such threshold selections "involve an evaluation of cost-benefit."[311] In particular, selection of a lower threshold typically increases the sensitivity of the assay (resulting in fewer false-negative results) and decreases specificity of the assay (resulting in more false-positive results), while selection of a higher threshold has the opposite effect. This is illustrated, for example, in Table 2 of Vilkin, which shows how different thresholds between 50 ng/ml and 200 ng/ml affect the sensitivity and specificity of the disclosed iFOBT.[312] Vilkin tested a range of thresholds from 50 ng/ml to 200 ng/ml (including the claimed 50 ng/ml and 200 ng/ml thresholds), and use of lower hemoglobin thresholds was routine

---

[310] *Id.* p. 2524.

[311] *Id.*

[312] Vilkin (EX1005) p. 2523, *see also* Guittet (EX1010) p. 213 (illustrating a similar threshold effect using a different quantitative iFOBT).

in the art.[313] A POSA would therefore routinely optimize the threshold used by balancing the risk that a false-negative result fails to diagnose a patient's CRC against the risk that a false-positive result subjects a patient to an unnecessary colonoscopy.

222. Notably, the hemoglobin concentration being measured in quantitative iFOBT is the concentration of hemoglobin in the hemoglobin stabilizing buffer, not in the amount of hemoglobin in the stool sample itself.[314] A POSA would therefore recognize that the optimal hemoglobin threshold used depends on the details of stool sample collection. Specifically, the concentration hemoglobin in the stabilizing buffer will depend both on how much stool is collected and what volume of buffer is used. Thus, if a relatively large amount of stool is added to a relatively small volume of buffer, then the concentration of hemoglobin in that buffer will be

---

[313] Vilkin (EX1005) p. 2523; Guittet (EX1010) p. 210 (describing 20 ng/ml as "the usual cut-off point"); Hoepffner (EX1029) p. 140 (describing use of a 10 ng/ml threshold).

[314] Vilkin (EX1005) pp. 2520-2521 (noting that 50-2000 ng/ml hemoglobin in the buffer is approximately equivalent to 40-400 μg/g hemoglobin in the feces).

higher than if a smaller amount of the same stool sample was added to a larger amount of buffer. A POSA would understand that the hemoglobin threshold will be routinely optimized, in part, based on the specific way the fecal sample was collected.

223. Accordingly, the hemoglobin thresholds recited in claims 16-20 are no more than result-effective variables that are the product of routine optimization and are therefore obvious.

B. Lenhard in view of Itzkowitz and Vilkin, in further view of Kanaoka renders obvious claims 12 and 13

1. Claim 12: "The method of claim 4, wherein determining expression from the human gene comprises measuring an amount of RNA expressed from the gene."

224. As I explain above, it would have been obvious to a person of skill in the art to improve the stool diagnostic assay of Lenhard by replacing the disclosed gFOBT with the automated iFOBT of Vilkin and incorporating the stool collection and DNA stabilization methods of Itzkowitz. The result of this obvious improvement is a method for processing a freshly-collected fecal sample that meets the limitations of claims 1-9, 11, and 14-20.

225. One of skill in the art would also find it obvious to further modify the above-described fecal processing method to incorporate the COX-2 RNA detection process disclosed in Kanaoka to arrive at the method

of claim 12.[315] Kanaoka states that use of COX-2 RNA as a biomarker "has a higher detection sensitivity compared to the detection of gene mutation of APC, K-ras, or p53."[316] Indeed, in Example 1, Kanaoka reports that the disclosed fecal COX-2 RNA assay exhibited a sensitivity of 90% and a specificity of 100%.[317] One of skill in the art would therefore have been motivated to use Kanaoka's mRNA detection assay either in place of or in addition to Lenhard's HIC1 promoter methylation assay to improve assay sensitivity.

226. Example 1 of Kanaoka provides further motivation to combine Kanaoka's COX-2 RNA assay with an iFOBT, like the one disclosed in Vilkin. In this example, samples were tested using both a COX-2 RNA assay and an iFOBT.[318] The iFOBT identified a CRC patient as positive that was missed by the COX-2 RNA assay, while the COX-2 RNA assay identified three CRC patients missed by the iFOBT.[319] A skilled artisan would

---

[315] Kanaoka (EX1007) ¶¶021-026.

[316] *Id.* ¶0076.

[317] *Id.* ¶0065.

[318] *Id.* ¶¶0055-0068.

[319] *Id.* ¶¶0067-0068.

therefore have been motivated to combine the Kanaoka fecal COX-2 RNA assay with an iFOBT, such as the one disclosed in Vilkin, to increase the sensitivity of both assays.

227. One of skill in the art would have had a reasonable expectation of successfully incorporating the COX-2 fecal RNA assay of Kanaoka into the fecal processing method rendered obvious by Lenhard, Vilkin and Itzkowitz. Example 1 of Kanaoka provides a working example of the successful combination of a COX-2 RNA assay with an iFOBT.[320] A person of skill in the art would reasonably expect to be able to preserve the fecal RNA in the sample without freezing because by the Priority Date it had been reported that "preserving fecal samples at room temperature for a duration of 5 days, in a medium ***suitable for DNA and RNA analysis is feasible***."[321] One of skill in the art would therefore have a reasonable expectation of successfully using the Kanaoka fecal RNA assay in a method of processing a freshly-collected fecal sample, as set forth in the challenged claims.

[320] Kanaoka (EX1007) ¶¶0055-0068.

[321] Nechvatal (EX1030) p. 131.

228. As Kanaoka discloses detection of an amount of RNA expressed from a COX-2 gene[322], the method of processing a fecal sample rendered obvious by Lenhard in view of Vilkin, Itzkowitz, and Kanaoka includes such a step, rendering claim 12 obvious.

2. Claim 13: "The method of claim 12, wherein measuring an amount of RNA expressed from the gene comprises reverse transcriptase polymerase chain reaction (RT-PCR)

229. When the COX-2 RNA detection process of Kanaoka is incorporated into the method of processing a fecal sample rendered obvious by Lenhard in view of Vilkin, and Itzkowitz, as described above, the resulting method includes measuring an amount of RNA expressed from the gene using RT-PCR, which Kanaoka uses to detect RNA expressed from the COX-2 gene.[323] Indeed, RT-PCR was a standard method for detecting RNA as of the Priority Date.

230. Accordingly, the method of processing a fecal sample rendered obvious by Lenhard in view of Vilkin, Itzkowitz, and Kanaoka includes such a step, rendering claim 13 obvious.

---

[322] Kanaoka (EX1007) ¶¶0021-0026.

[323] *Id.* ¶¶0021-0025, 0047-0048, 0059.

C. Lenhard in view of Itzkowitz and Vilkin, in further view of Derks renders obvious claim 10

231. As I explain above, it would have been obvious to a POSA to improve the stool diagnostic assay of Lenhard by replacing the disclosed gFOBT with the automated iFOBT of Vilkin and incorporating the stool collection and DNA stabilization methods of Itzkowitz. The advantages such modifications are expressly disclosed in the references themselves and were well known in the art by the Priority Date. The result of this obvious improvement is a method for processing a freshly-collected fecal sample that meets the limitations of claims 1-9, 11, and 14-20

232. Based on Derks, a POSA would also have found it obvious to test the remaining portion of the stool sample for methylation of the GATA-4 gene as well as the HIC1 promoter, to arrive at the method of claim 10.

233. Lenhard suggests adding additional methylated DNA biomarkers to the disclosed assay, stating that a "[c]ombination of HIC1 with a few other sensitive and specific methylation markers may allow for highly sensitive and specific stool-based detection of CRCs and adenomas."[324] Derks identifies GATA-4 methylation as such a biomarker, reporting that methylation of GATA-4 "occurred significantly more frequent

[324] Lenhard (EX1004) p. 148.

in the carcinomas when compared to corresponding normal mucosa."[325] Indeed, Derks reports that the GATA-4 gene is methylated in 94.4% of CRC tissue but only 16.7% of normal tissue.[326]

234. A person of ordinary skill in the art would therefore have been motivated to include detection of GATA-4 methylation, as disclosed by Derks, to the fecal processing method rendered obvious by Lenhard, Vilkin and Itzkowitz to further improve the assay's sensitivity, rendering claim 10 obvious.

D. Shuber and Vilkin render obvious claims 1-9, 11, and 14-20

235. Shuber and Vilkin render obvious a method of processing a freshly collected fecal sample according to claims 1-11 and 14-20 of the '781 Patent.

236. These claims are directed to the separation of a fecal sample into two portions so a pair of well-established assays—one detecting blood proteins as disclosed in Vilkin and the other detecting nucleic acids as disclosed in Shuber —can separately be performed on the two different portions of the sample. It would have been obvious for a person of ordinary

[325] Derks (EX1008) p. 250.

[326] *Id.* p. 252, Table 3b.

skill to combine the fecal DNA assay set forth in Shuber with the iFOBT of Vilkin to arrive at the methods of the challenged claims.

237. As I explain above, Vilkin discloses a quantitative iFOBT in which a portion of the fecal sample is removed using a "fecal test device" that is shaped like a small test tube that has a probe with a serrated tip attached to the inner portion of the device's cap (illustrated below).[327] The probe is "poked into the stool and then pushed back into the tube, past a scraper and through a membrane into the sample cup."[328] This results in sealing of the fecal test sampling device with the tip of the probe being in a closed amount of hemoglobin stabilizing buffer.[329]

---

[327] Vilkin (EX1005) p. 2520.

[328] *Id.*

[329] *Id.*

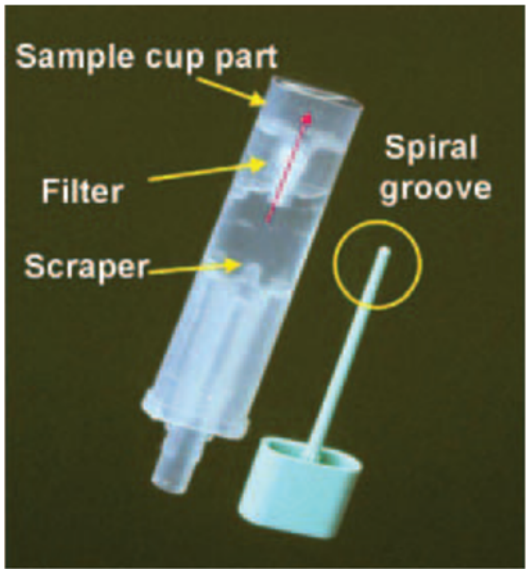

238. The sealed container is transported to a diagnostic laboratory without freezing, where a benchtop instrument is used to automatically quantitate the level of hemoglobin in the sample.[330]

239. Shuber describes a fecal DNA analysis method in which a stool sample is "directly deposited into a container (e.g., a sealable container)" to which the "stabilizing solution may be added."[331] The stabilizing solution is added to a stool sample "to preserve a sample for analysis using a nucleic acid integrity assay along with a mutation detection assay (e.g., a multiple mutation panel assay), a hypermethylation assay, or both."[332] The "container

[330] *Id.* pp. 2520-2521.

[331] Shuber (EX1009) 29:8-19.

[332] *Id.* 7:19-21.

with sample and stabilization solution may be sealed for storage/shipping."[333] Shuber emphasizes that "[m]ethods of the invention do not require refrigeration or freezing."[334]

240. One of skill in the art would have further been motivated to combine a DNA-based stool test, such as the one disclosed in Shuber, with a blood protein-based stool test, such as the one disclosed in Vilkin, in order to generate a CRC diagnostic test with improved sensitivity.

241. By the priority date, the advantages of combining such stool DNA and blood protein assays were well understood in the art. For example, Nishikawa, a 2002 paper reporting a fecal DNA assay similar to the ones disclosed in Shuber, concluded that the disclosed assay "should provide a more sensitive and specific tool for mass screening of colorectal cancer than is currently available, **especially if used in combination with fecal occult blood testing** and other methods for detecting genetic abnormalities."[335]

242. That combining fecal DNA assays with FOBT increases assay sensitivity is further supported by Lenhard, which reported that "[t]he

---

[333] *Id.* 29:8-19.

[334] *Id.* 7:12-15.

[335] Nishikawa (EX1011) p. 112 (emphasis added).

combination of HIC1 methylation analysis with FOBT allowed for the detection of two thirds of CRCs."[336] Lenhard determined that while HIC1 methylation detected 42% of CRCs and FOBT detected 35% of CRCs, the combination of the two markers was able to detect 65% of CRCs.[337] Lenhard also noted that "the combined test detected all localized cancers."[338]

243. Further evidencing the recognized value of combining DNA assays with fecal blood assays, Kutzner examined "whether the analysis of three faecal DNA markers had the potential to complement or even to replace the FOBT and whether **the combined application of the two methods might increase the overall diagnostic reliability,**" and concluded that "[t]he combined application of FOBT and MD [a DNA methylation assay] **resulted in an overall sensitivity, which could not be achieved by any of the methods alone** and which is in the range of invasive diagnostic methods [i.e., colonoscopy]."[339]

---

[336] Lenhard (EX1004) p. 143.

[337] *Id.* p. 147, Table 4.

[338] *Id.* p. 147.

[339] Kutzner (EX1012) p. 34, Abstract.

244. Indeed, the 2008 joint guideline from the American Cancer Society, the US Multi-Society Task Force on Colorectal Cancer, and the American College of Radiology proposed investigating whether "including a sensitive gFOBT or FIT [another acronym for iFOBT] at the time of testing would **improve sensitivity [of DNA-based assays] without adversely affecting specificity**."[340]

245. Accordingly, one of skill in the art would have been motivated to combine a fecal DNA test, such as those disclosed in Shuber, with a fecal blood test, like the one disclosed in Vilkin to improve the sensitivity of CRC diagnosis. When the combined test was performed, a patient would: (1) directly defecate into a sealable container at home (as in Shuber); (2) use a fecal test sampling device to remove a portion of the sample and combine it with hemoglobin stabilizing buffer (as in Vilkin); (3) add the DNA stabilizing buffer of Shuber to the remaining sample before sealing the container (as in Shuber); and (4) ship the sealed sampling device and sealed container to a diagnostic laboratory for testing (as in Vilkin and Shuber, respectively). A POSA would recognize that separation of the sample by the patient at home is necessary to ensure that the relevant biomarker in each

[340] Levin (EX1013) p. 1578 (emphasis added).

portion (hemoglobin in one, DNA in the other) is stabilized with an appropriate buffer prior to shipment, as taught by Vilkin and Shuber.[341] A POSA would also recognize that it is more convenient for the patient to use the Vilkin sampling device before the fecal sample is immersed in buffer.

246. One of skill in the art would have a reasonable expectation of combining such assays because doing so requires no more that the use of routine methods to perform of a pair of well-established assays on portions of a fecal sample.

247. As set forth below, when the methods of Shuber and Vilkin are performed on a fecal sample, the result is the fecal processing method set forth in claims 1-9, 11, and 14-20.

1. Claim 1

a. "A method of processing a freshly-collected fecal sample without freezing, the method comprising:"

248. To the extent the preamble of claim 1 is limiting, it is rendered obvious by Shuber and Vilkin.

[341] Vilkin (EX1005) p. 2520; Shuber (EX1009) 29:8-19.

249. Both Vilkin and Shuber teach the processing of freshly-collected fecal samples without freezing.[342] Accordingly, the obvious combination of the two assays would also involve processing a fresh fecal sample without freezing.[343]

b. "a) collecting a fecal sample from a human subject, wherein the fecal sample is collected at home by the human subject by defecation directly into a sealable collection vessel;"

250. Both Shuber and Vilkin disclose the collection of a fecal sample from a human subject.[344] Accordingly, when the fecal DNA test of Shuber and the iFOBT of Vilkin are both performed on the same stool sample it results in the collection of a fecal sample from a human subject, meeting this claim element.

251. Collection of a fecal sample at home by defecation directly into a sealable collection vessel is rendered obvious by Shuber and Vilkin. Shuber describes sample collection at home by direct defecation into a container, stating that the stool sample can be "directly deposited into a container (e.g., a sealable container)" to which the "stabilizing solution may

---

[342] Vilkin (EX1005) p. 2520, Shuber (EX1009) 7:12-15.

[343] Shuber (EX1009); Vilkin (EX1005).

[344] Vilkin (EX1005) p. 2520; Shuber (EX1009) 2:27-32, 6:9-20, 14:25-30.

be added."[345] Shuber notes that such stabilizing solution "may be particularly useful if a sample is obtained at a remote location and mailed or delivered to a testing center."[346] Vilkin also emphasizes that the iFOBT assay allows for at-home sample collection.[347]

252. Indeed, by the Priority Date, direct defecation of into a sealable container by a patient at home had been a standard method for collecting stool samples for decades. A laboratory manual from 1985 recommends collecting fecal samples in a sealable container and that "[f]eces should be passed directly into the container."[348] Similarly, a patent filed by Exact in 1994, Exact states that "[t]he receptacle, whether adapted to fit a toilet or simply adapted for receiving the voided stool sample should include sealing means sufficient to contain the voided stool sample and any solution added thereto and to prevent the emanation of odors."[349]

---

[345] Shuber (EX1009) 29:8-19.

[346] *Id.* 10:12-14.

[347] Vilkin (EX1005) p. 2524.

[348] Melvin (EX1026) p. 2.

[349] Lapidis '650 (EX1028) 7:45-49, Figure 2.

253. By the priority date, it had long been recognized that sample collection is preferably completed by patients at home for the convenience of the patients and to increase patient compliance. Although home tests require mailing, it was recognized there are also attendant advantages because "geographic access becomes less of a barrier, there is no loss of time from work, and no formal health care visit."[350] Indeed, by the Priority Date, Exact offered a commercial fecal DNA test that used direct defecation into a sealable container at home as the method by which the stool sample was collected.

254. Accordingly, by the Priority Date, a person of ordinary skill would have recognized collecting a stool sample at home by direct defecation into a sealable collection vessel, as described in Shuber, as a routine method for collection of a stool sample. It would therefore have been obvious to use such a collection method when performing that assays of Shuber and Vilkin on a stool sample.

c. "b) removing a portion of the fecal sample to a separate sealable container to produce a removed portion and a remaining portion of the fecal sample;"

[350] Itzkowitz (EX1006) p. 115.

255. When the Vilkin assay is performed on the stool sample, a portion of the fecal sample is obtained using a "fecal test device" that is shaped like a small test tube that has a probe with a serrated tip attached to the inner portion of the device's cap (illustrated below).[351] The probe is "poked into the stool and then pushed back into the tube, past a scraper and through a membrane into the sample cup."[352] This results in sealing of the fecal test sampling device with the tip of the probe being in a closed amount of hemoglobin stabilizing buffer, creating a removed portion and a remaining portion of the fecal sample.[353]

---

[351] Vilkin (EX1005) p. 2520.

[352] *Id.*

[353] *Id.*

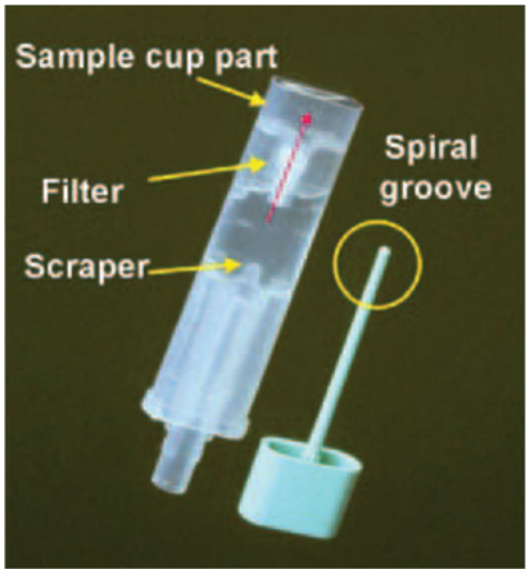

256. Thus, performing the fecal DNA test of Shuber and the iFOBT of Vilkin on a stool sample results in the removal of a portion of the fecal sample to a separate sealable container to produce a removed portion and a remaining portion of the fecal sample.

d. "c) combining the removed portion of the fecal sample in the separate sealable container with a buffer that prevents denaturation or degradation of blood proteins found in a fecal sample, and sealing the sealable container; and"

257. When the Vilkin assay is used, a probe on the cap of the "fecal test sampling device" is "poked into the stool and then pushed back into device, past a scraper and through a membrane into the sample cup."[354] This results in sealing of the fecal test sampling device with the tip "put in a

[354] *Id.* p. 2520.

closed amount of Hb stabilizing buffer."[355] The Hb stabilizing buffer facilitates the convenient shipment of the at-home collected sample to a diagnostic laboratory for analysis. Vilkin teaches that when the samples are in this buffer they "maintained their elevated fecal Hb levels for 21 or more days" when stored at 4°C.[356]

258. Thus, performing the fecal DNA test of Shuber and the iFOBT of Vilkin on a stool sample results in the removed portion of the fecal sample being combined in the separate sealable container with a buffer that prevents denaturation or degradation of blood proteins found in a fecal sample, as well as the sealing of the sealable container.

e. "d) combining the remaining portion of the fecal sample in the sealable collection vessel with a stabilizing buffer, and sealing the collection vessel"

259. As discussed above, Shuber describes a fecal DNA analysis method in which a DNA stabilizing buffer is added to a stool sample "to preserve a sample for analysis using a nucleic acid integrity assay along with a mutation detection assay (e.g., a multiple mutation panel assay), a

---

[355] *Id.*

[356] *Id.* p. 2521.

hypermethylation assay, or both."[357] Shuber states that the stool sample can be "directly deposited into a container (e.g., a sealable container)" to which the "stabilizing solution may be added."[358] The "container with sample and stabilization solution may be sealed for storage/shipping."[359]

260. Performing the fecal DNA test of Shuber and the iFOBT of Vilkin on a stool sample therefore results in the remaining portion of the fecal sample being combined with a stabilizing buffer in the sealable collection vessel and the collection vessel being sealed.

261. Thus, when the fecal DNA test of Shuber and the iFOBT of Vilkin are both performed on a stool sample, each of the steps of claim 1 are performed, rendering the claim obvious.

2. Claim 2: "The method of claim 1, further comprising delivering the sealable container containing the removed portion of the fecal sample and said buffer and the sealable collection vessel containing the remaining portion of the fecal sample and said stabilizing buffer to a medical diagnostics laboratory"

262. Delivering the sealable container containing the removed portion of the fecal sample and said buffer and the sealable collection vessel

---

[357] Shuber (EX1009) 7:19-21.

[358] *Id.* 29:8-19.

[359] *Id.* 29:8-19.

containing the remaining portion of the fecal sample and said stabilizing buffer to a medical diagnostics laboratory is rendered obvious by Shuber and Vilkin. Indeed, both references include delivery of the collected fecal samples to a medical diagnostics laboratory for testing.[360]

263. In particular, the fecal DNA assays describe in Shuber and the automated iFOBT disclosed in Vilkin are each complicated molecular biology assays requiring specialized equipment and expertise. At-home performance of such assays is therefore not practical (and probably not even possible). At the same time, most patients prefer the convenience and privacy afforded by at-home collection of fecal samples. As such, a person of skill in the art would recognize that the portions of fecal samples in their respective stabilizing buffer that were collected at home according to the methods of Shuber and Vilkin would be delivered to a medical diagnostics laboratory for analysis.

264. Accordingly, when the fecal DNA test of Shuber and the iFOBT of Vilkin are both performed on a stool sample, the resulting sealed containers will be delivered to a medical diagnostics laboratory for testing and claim 2 is therefore obvious.

---

[360] Shuber (EX1009) 10:10-15; Vilkin (EX1005) p. 2520.

3. Claim 3

a. "A method of processing a fecal sample, the method comprising:"

265. To the extent the preamble of claim 3 is limiting, it is rendered obvious by Shuber and Vilkin, as both references directed to methods of processing fecal samples.[361]

b. "a) obtaining a pair of portions of a fecal sample collected from a human subject, the pair of portions comprising: i) a sealed sealable container containing a removed portion of a fecal sample and a buffer; and ii) a sealed sealable collection vessel containing a remaining portion of a fecal sample and a stabilizing buffer, the pair of portions obtained by the method of claim 1;"

266. Obtaining the sealable containers generated according to the method of claim 1 is rendered obvious by Shuber and Vilkin. Both references disclose delivery of the collected fecal samples to a medical diagnostics laboratory for testing.[362]

267. Accordingly, when the fecal DNA test of Shuber and the iFOBT of Vilkin are both performed on a stool sample, sealed containers

---

[361] Shuber (EX1009); Vilkin (EX1005).

[362] Shuber (EX1009) 10:12-14; Vilkin (EX1005) p. 2520.

containing the portions of the fecal sample in their respective buffers will be obtained by technicians at a medical diagnostics laboratory.

c. "b) testing the removed portion of the fecal sample for an amount of blood protein present in the removed portion;"

268. The Vilkin iFOBT is a quantitative test of the level of human hemoglobin (Hb) in a removed portion of a stool sample.[363] For example, Table 1 of Vilkin provides the Hb levels detected in fecal samples obtained from patients with or without colorectal adenomas or cancer.[364] Thus, performing the fecal DNA test of Shuber and the iFOBT of Vilkin on a stool sample results in the testing of the removed portion of the sample for an amount of blood protein in that portion.

d. "c) extracting nucleic acid from the remaining portion of the fecal sample;"

269. Performance of fecal DNA analysis typically requires extraction of the DNA from other components in the fecal sample prior to DNA analysis. Consistently, the fecal DNA assays described in Shuber includes purification of DNA from the remaining portion of the stool

[363] Vilkin (EX1005) p. 2519.

[364] *Id.* p. 2522.

sample.[365] Indeed, extraction of DNA from the stool sample is a standard step in an assay in which stool DNA is tested. Thus, performing the fecal DNA test of Shuber and the iFOBT of Vilkin on a stool sample results in the extracting nucleic acid from the remaining portion of the fecal sample.

e. "d) testing the nucleic acid for an amount of a human nucleic acid"

270. Performance of the fecal DNA assay described in Shuber includes "analysis using a nucleic acid integrity assay along with a mutation detection assay (e.g., a multiple mutation panel assay), a hypermethylation assay, or both."[366] Each of these assays include the testing of a nucleic acid extracted from feces for an amount of a human nucleic acid. Thus, performing the fecal DNA test of Shuber and the iFOBT of Vilkin on a stool sample results in the extracted nucleic acid being tested for an amount of a human nucleic acid.

271. Thus, when the fecal DNA test of Shuber and the iFOBT of Vilkin are both performed on a stool sample, each of the steps of claim 3 are performed, rendering the claim obvious.

---

[365] Shuber (EX1009) 15:18-16:17.

[366] *Id.* 7:19-21.

4. Claim 4: "The method of claim 3, wherein testing the nucleic acid comprises determining expression from a human gene."

272. Claim 4 recites that the assay include "determining expression from a human gene." Based on the language of claims 5 and 6, the process of "determining expression of a human gene," recited in claim 4 must at least include the testing for the presence of human DNA having an epigenetic modification, as recited in claim 5, including by measuring an amount of methylated human DNA, as recited in claim 6. Both claims 5 and 6 depend from claim 4. I understand that dependent claims narrow claim 4's scope. Thus, claim 4 (testing the nucleic acid by determining expression from a human gene) at least includes detection of a methylated human gene or promoter in the nucleic acid.

273. Consistent with this understanding, the '781 patent defines "epigenetic modification" as including any alteration in the DNA, **generally resulting in diminished gene expression**, which is mediated by mechanisms other than alterations in the primary nucleotide sequence of a gene."[367] In fact, the only mention of looking at gene expression in the

[367] '781 Patent (EX1001) 12:35-39 (emphasis added).

disclosure of the ’781 patent is in reference to using it as an indication of gene hypermethylation.[368]

274. The fecal DNA assays disclosed in Shuber include testing nucleic acids for the presence of methylated human genes (“assays are performed to detect hypermethylation at one or both of HLTF and V29 loci.”).[369] Thus, performing the fecal DNA test of Shuber and the iFOBT of Vilkin on a stool sample results in the extracted nucleic acid being tested by determining expression from a human gene, rendering claim 4 obvious.

5. Claim 5: “The method of claim 4, wherein determining expression from the human gene comprises testing the nucleic acid for the presence of human DNA having an epigenetic modification.”

275. As I discuss above, the fecal DNA assays disclosed in Shuber include testing for the presence of the epigenetic modification of methylated human DNA.[370] Thus, performing the fecal DNA test of Shuber and the iFOBT of Vilkin on a stool sample results in the extracted nucleic acid for the presence of human DNA having an epigenetic modification, rendering claim 5 obvious.

---

[368] *Id.* 13:4-33.

[369] Shuber (EX1009) 14:1-5.

[370] *Id.* p. 14:1-5.

6. Claim 6: "The method of claim 5, wherein testing the nucleic acid for the presence of human DNA having an epigenetic modification comprises measuring an amount of a methylated human DNA."

276. As I discuss above, the stool DNA assay disclosed in Shuber includes testing for the presence of methylated human DNA.[371] Thus, performing the fecal DNA test of Shuber and the iFOBT of Vilkin on a stool sample results in the measuring of an amount of a methylated human DNA, rendering claim 6 obvious.

7. Claim 7: "The method of claim 5, wherein the epigenetic modification comprises aberrant methylation."

277. The '781 patent defines aberrant methylation as at least including hypermethylation ("aberrant methylation, which may be referred to as hypermethylation of the gene or genes is detected.").[372] The stool DNA assay disclosed in Shuber includes testing for the presence of hypermethylated DNA.[373] Thus, performing the fecal DNA test of Shuber and the iFOBT of Vilkin on a stool sample results in the detection of aberrant methylation, rendering claim 7 obvious.

---

[371] *Id.* p. 14:1-5.

[372] '781 patent (EX1001) 12:47-49.

[373] Shuber (EX1009) 14:1-5.

8. Claim 8: "The method of claim 7, wherein the aberrant methylation comprises hypermethylation."

278. As I discuss above, the fecal DNA assays disclosed in Shuber include testing for the presence of hypermethylated DNA.[374] Thus, performing the fecal DNA test of Shuber and the iFOBT of Vilkin on a stool sample results in the detection of hypermethylation, rendering claim 8 obvious.

9. Claim 9: "The method of claim 7, wherein the human DNA having an epigenetic modification comprises a gene and/or a promoter region of a gene."

279. The fecal DNA assays disclosed in Shuber include for the presence of methylated human genes, which is an epigenetic modification of a gene and/or a promotor region of a gene ("assays are performed to detect hypermethylation at one or both of HLTF and V29 loci.").[375] Thus, performing the fecal DNA test of Shuber and the iFOBT of Vilkin on a stool sample results in the extracted nucleic acid being tested by detecting an epigenetic modification of a gene and/or a promoter of a gene, rendering claim 9 obvious.

---

[374] *Id.* 14:1-5.

[375] *Id.* 14:1-5.

10. Claim 11: "The method of claim 5, wherein testing the nucleic acid for presence of human DNA having an epigenetic modification comprises modifying the nucleic acid with bisulfate ions under conditions wherein unmethylated cytosine is converted to uracil."

280. As I explain above, it is likely this claim contains a typographical error and intends to cover the use of bisulfite ions and not bisulfate ions. In particular, I am not aware of a test for an epigenetic modification that uses bisulfate ions and there is no disclosure in the specification of the use of bisulfate ions.

281. Assuming that claim 11 does, indeed, contain such a typographical error, it is rendered obvious by Shuber and Vilkin. In particular, the fecal DNA assays disclosed in Shuber include testing for the presence of DNA methylation (an epigenetic modification).[376] As of the Priority Date, the standard method for testing for DNA methylation used "bisulfite conversion," in which bisulfite ions are used to convert unmethylated cytosine to uracil.[377] As of the Priority Date, in a typical DNA methylation, DNA is treated with sodium bisulfite to selectively converts

[376] *Id.* 7:19-21, 14:1-5.

[377] Lenhard (EX1004) p. 144; Itzkowitz (EX1006) p. 112.

unmethylated cytosine to uracil, leaving methylated cytosines unchanged.[378] Primers that selectively amplify either the converted sequences or unconverted sequences can then be used to distinguish converted sequences that originated from unmethylated DNA from unconverted sequences, originating from methylated DNA.

282. Thus, performing the fecal DNA test of Shuber and the iFOBT of Vilkin on a stool sample results in the use of bisulfite conversion to detect DNA methylation, and it would be obvious to use a standard MSP assay that uses bisulfite conversion to detect DNA methylation, rendering claim 11 obvious.

11. Claim 14: "The method of claim 3, wherein testing for an amount of blood protein in the removed portion comprises testing for a concentration of hemoglobin in the removed portion."

283. The iFOBT disclosed in Vilkin tests for a concentration of hemoglobin in a removed portion of a fecal sample.[379] Thus, performing the fecal DNA test of Shuber and the iFOBT of Vilkin on a stool sample results

[378] Lenhard (EX1004) p. 144; Itzkowitz (EX1006) p. 112; Li (EX1059) p. 1427.

[379] Vilkin (EX1005) pp. 2519, 2522, Table 1.

in the testing for a concentration of hemoglobin in the removed portion, rendering claim 14 obvious.

12. Claim 15: "The method of claim 14, wherein the testing for the concentration of hemoglobin comprises immunochemical detection of hemoglobin."

284. The iFOBT disclosed in Vilkin uses an immunochemical process to detect hemoglobin.[380] Thus, performing the fecal DNA test of Shuber and the iFOBT of Vilkin on a stool sample results in the testing for a concentration of hemoglobin by immunochemical detection of hemoglobin, rendering claim 15 obvious.

13. Claims 16-20: "The method of claim 14, wherein the removed portion of the fecal sample is considered positive for the presence of blood when the concentration of hemoglobin detected in the removed portion is at least [5, 10, 20, 50, or 200] ng/ml."

285. Claims 16-20 each depend from claim 14 and recite a particular threshold hemoglobin concentration used when determining whether the removed portion of the fecal sample is considered positive for the presence of blood. Each of claims 16-20 is rendered obvious by Shuber and Vilkin because selecting any of the claimed hemoglobin thresholds would have

[380] Vilkin (EX1005) pp. 2519, 2520-2521.

been a matter of routine optimization of a result-effective variable, which I understand can be a basis of obviousness.

286. Vilkin explains that one of the advantages of its test is that such "instrument-developed, quantitative, fecal occult blood testing allows the physician to choose the optimal fecal Hb threshold level that triggers a follow-up colonoscopy."[381] Such threshold selections "involve an evaluation of cost-benefit."[382] In particular, selection of a lower threshold typically increases the sensitivity of the assay (resulting in fewer false-negative results) and decreases specificity of the assay (resulting in more false-positive results), while selection of a higher threshold has the opposite effect. This is illustrated, for example, in Table 2 of Vilkin, which shows how different thresholds between 50 ng/ml and 200 ng/ml affect the sensitivity and specificity of the disclosed iFOBT.[383] Vilkin tested a range of thresholds from 50 ng/ml to 200 ng/ml (including the claimed 50 ng/ml and 200 ng/ml thresholds), and use of lower hemoglobin thresholds was routine

---

[381] Vilkin (EX1005) p. 2524.

[382] *Id.* p. 2524.

[383] *Id.* p. 2523; *see also* Guittet (EX1010) p. 213 (illustrating a similar threshold effect using a different quantitative iFOBT).

in the art.[384] A POSA would therefore routinely optimize the threshold used by balancing the risk that a false-negative result fails to diagnose a patient's CRC against the risk that a false-positive result subjects a patient to an unnecessary colonoscopy.

287. Notably, the hemoglobin concentration being measured in quantitative iFOBT is the concentration of hemoglobin in the hemoglobin stabilizing buffer, not in the amount of hemoglobin in the stool sample itself.[385] A POSA would therefore recognize that the optimal hemoglobin threshold used depends on the details of stool sample collection. Specifically, the concentration hemoglobin in the stabilizing buffer will depend both on how much stool is collected and what volume of buffer is used. Thus, if a relatively large amount of stool is added to a relatively small volume of buffer, then the concentration of hemoglobin in that buffer will be

---

[384] Vilkin (EX1005) p. 2523; Guittet (EX1010) (210 describing 20 ng/ml as "the usual cut-off point"); Hoepffner (EX1029) p. 140 (describing use of a 10 ng/ml threshold).

[385] Vilkin (EX1005) pp. 2520-2521 (noting that 50-2000 ng/ml hemoglobin in the buffer is approximately equivalent to 40-400 μg/g hemoglobin in the feces).

higher than if a smaller amount of the same stool sample was added to a larger amount of buffer. A POSA would understand that the hemoglobin threshold will be routinely optimized, in part, based on the specific way the fecal sample was collected.

288. Accordingly, the hemoglobin thresholds recited in claims 16-20 are no more than result-effective variables that are the product of routine optimization and are therefore obvious.

E. Shuber and Vilkin, in view of Kanaoka render obvious claims 12 and 13

1. Claim 12 "The method of claim 4, wherein determining expression from the human gene comprises measuring an amount of RNA expressed from the gene."

289. As I explain above, it would have been obvious to a person of ordinary skill to combine the fecal DNA test of Shuber with the iFOBT of Vilkin to improve the sensitivity of both assays. When both of these well-established assays are performed on a stool sample, the resulting process meets the limitations of claims 1-9, 11, and 14-20.

290. One of skill in the art would also find it obvious to further modify the above-described fecal processing method to incorporate the COX-2 RNA detection process disclosed in Kanaoka to arrive at the method

of claim 12.[386] Kanaoka states that use of COX-2 RNA as a biomarker "has a higher detection sensitivity compared to the detection of gene mutation of APC, K-ras, or p53."[387] Indeed, in Example 1, Kanaoka reports that the disclosed fecal COX-2 RNA assay exhibited a sensitivity of 90% and a specificity of 100%.[388] One of skill in the art would therefore have been motivated to use Kanaoka's mRNA detection assay either in place of or in addition to Shuber's fecal DNA assays to improve assay sensitivity.

291. Example 1 of Kanaoka provides further motivation to combine Kanaoka's COX-2 RNA assay with an iFOBT, like the one disclosed in Vilkin. In this example, samples were tested using both a COX-2 RNA assay and an iFOBT.[389] The iFOBT identified a CRC patient as positive that was missed by the COX-2 RNA assay, while the COX-2 RNA assay identified three CRC patients missed by the iFOBT.[390] A POSA would therefore have been motivated to combine the Kanaoka fecal COX-2 RNA assay with an

---

[386] Kanaoka (EX1007) ¶¶021-026.

[387] *Id.* ¶0076.

[388] *Id.* ¶0065.

[389] *Id.* ¶¶0055-0068.

[390] *Id.* ¶¶0067-0068.

iFOBT, such as the one disclosed in Vilkin, to increase the sensitivity of both assays.

292. One of skill in the art would have had a reasonable expectation of successfully incorporating the COX-2 fecal RNA assay of Kanaoka into the fecal processing method rendered obvious by Shuber and Vilkin. Example 1 of Kanaoka provides a working example of the successful combination of a COX-2 RNA assay with an iFOBT.[391] A POSA would reasonably expect to be able to preserve the fecal RNA in the sample without freezing because by the Priority Date it had been reported that "preserving fecal samples at room temperature for a duration of 5 days, in a medium ***suitable for DNA and RNA analysis is feasible***."[392] One of skill in the art would therefore have a reasonable expectation of successfully using the Kanaoka fecal RNA assay in a method of processing a freshly-collected fecal sample, as set forth in the challenged claims.

293. As Kanaoka discloses detection of an amount of RNA expressed from a COX-2 gene[393], the method of processing a fecal sample

---

[391] *Id.* ¶¶0055-0068.

[392] Nechvatal (EX1030) p. 131.

[393] Kanaoka (EX1007) ¶¶0021-0026.

rendered obvious by Shuber, Vilkin, and Kanaoka includes such a step, rendering claim 12 obvious.

2. Claim 13: "The method of claim 12, wherein measuring an amount of RNA expressed from the gene comprises reverse transcriptase polymerase chain reaction (RT-PCR)

294. When the COX-2 RNA detection process of Kanaoka is incorporated into the method of processing a fecal sample rendered obvious by Shuber and Vilkin, as described above, the resulting method includes measuring an amount of RNA expressed from the gene using RT-PCR, which Kanaoka uses to detect RNA expressed from the COX-2 gene.[394] Indeed, RT-PCR was a standard method for detecting RNA as of the Priority Date. Thus, the method of processing a fecal sample rendered obvious by Shuber, Vilkin, and Kanaoka includes such a step, rendering claim 13 obvious.

F. Shuber and Vilkin, in view of Derks render obvious claim 10

295. As I explain above, it would have been obvious to a POSA to combine the fecal DNA test of Shuber with the iFOBT of Vilkin to improve upon the sensitivity achieved by either assay alone. When both of these well-

[394] *Id.* ¶¶0021-0025, 0047-0048, 0059.

established assays are performed on a stool sample, the resulting process meets the limitations of claims 1-9, 11, and 14-20.

296. The fecal DNA assays disclosed in Shuber include hypermethylation assays.[395] Derks identifies GATA-4 methylation as a biomarker of CRC, reporting that methylation of GATA-4 "occurred significantly more frequent in the carcinomas when compared to corresponding normal mucosa."[396] Indeed, Derks reports that the GATA-4 gene is methylated in 94.4% of CRC tissue but only 16.7% of normal tissue.[397]

297. A POSA would therefore have been motivated to detect GATA-4 methylation, in the hypermethylation assays disclosed in Shuber, to arrive at the method of claim 10.

X. SECONDARY CONSIDERATIONS OF NON-OBVIOUSNESS

298. I understand that Patent Owner bears the burden of coming forward with evidence of any secondary considerations supporting the non-obviousness of the '781 patent. I understand that Patent Owner has not yet

---

[395] Shuber (EX1009) 14:1-5.

[396] Derks (EX1008) p. 250.

[397] *Id.* p. 252, Table 3b.

provided such evidence in this proceeding, and I reserve the right to respond to Patent Owner's evidence of secondary considerations if and when such evidence is provided to me.

XI. CONCLUSION

299. For the reasons set forth above, it is my opinion that all of claims of the '781 patent are obvious.

300. I reserve the right to offer further opinions relevant to the invalidity of the claims of the '781 patent and/or offer testimony in support of this declaration.

301. In signing this declaration, I recognize that the declaration will be filed as evidence in Geneoscopy's IPR. I also recognize that I may be subject to cross-examination in this proceeding. If required, I will appear for cross-examination at the appropriate time.

DECLARATION OF DUNCAN WHITNEY

I hereby declare that all statements made herein of my own knowledge are true and that all statements made on information and belief are believed to be true, and further that the statements were made with the knowledge that willful false statements and the like are punishable by fine or imprisonment, or both, under 18 U.S.C. § 1001.

Dated: January 10, 2024

Respectfully submitted,

Duncan Whitney, Ph.D.

APPENDIX A: LIST OF EXHIBITS

Exhibit	Short Name	Description
EX1001	’781 patent	U.S. Patent No. 11,634,781.
EX1002	Whitney Declaration	Expert Declaration of Dr. Whitney Ph.D.
EX1003	Whitney CV	Curriculum Vitae of Dr. Duncan Whitney
EX1004	Lenhard	Konstanze Lenhard et al., “Analysis of Promoter Methylation in Stool: A Novel Method for the Detection of Colorectal Cancer,” *Clinical Gastroenterology and Hepatology*, 3:142-149 (2005).
EX1005	Vilkin	Alex Vilkin et al., “Performance Characteristics and Evaluation of an Automated-Developed and Quantitative, Immunochemical Fecal Occult Blood Screening Test,” *American Journal of Gastroenterology*, 100:2519-2525 (2005).
EX1006	Itzkowitz	Steven Itzkowitz et al., “Improved Fecal DNA Test for Colorectal Cancer Screening,” *Clinical Gastroenterology and Hepatology*, 5:111-117 (2007).
EX1007	Kanaoka	U.S. Patent Publication Number US 2006/0216714.
EX1008	Derks	Sarah Derks et al., “Promoter Methylation Precedes Chromosomal Alterations in Colorectal Cancer Development,” *Cellular Oncology*, 28:247-257 (2006).
EX1009	Shuber	International Patent Application Publication Number WO2005/113769.
EX1010	Guittet	Lydia Guittet et al., “Comparison of A Guaiac Based And An Immunochemical Faecal Occult Blood Test In Screening For Colorectal

Exhibit	Short Name	Description
		Cancer In A General Average Risk Population," *Gut*, 56:210-214 (2007).
EX1011	Nishikawa	Takashi Nishikawa et al., "A Simple Method Of Detecting K-Ras Point Mutations in Stool Samples for Colorectal Cancer Screening Using One-Step Polymerase Chain Reaction/Restriction Fragment Length Polymorphism Analysis," *Clinica Chimica Acta*, 318 107–112 (2002).
EX1012	Kutzner	Nadie Kutzner et al., "Non-Invasive Detection of Colorectal Tumours by the Combined Application Of Molecular Diagnosis and the Faecal Occult Blood Test," *Cancer Letters*, 229:33-41 (2005).
EX1013	Levin	Bernard Levin et al., "Screening and Surveillance for the Early Detection of Colorectal Cancer and Adenomatous Polyps, a Joint Guideline from the American Cancer Society, the US Multi-Society Task Force on Colorectal Cancer, and the American College of Radiology," *Gastroenterology*, 134:1570–1595 (2008).
EX1014	'581 Provisional Application	US Provisional Patent Application US61/149,581.
EX1015	'581 Transmittal	Transmittal Notice for U.S. Provisional Patent Application US61/149,581.
EX1016	Joost Louwagie Profile	LinkedIn Page of Joost Louwagie.
EX1017	US2016/0194723	US Patent Publication No. US2016/0194723.
EX1018	US2012/0164238	US Patent Publication No. US2012/0164238.
EX1019	Final Office Action	USPTO Final Office Action for US Patent Publication No. US15/010,436 dated October 28, 2016.

Exhibit	Short Name	Description
EX1020	Nonfinal Office Action	USPTO Nonfinal Office Action for US Patent Publication No. US17/936,335 dated January 11, 2023.
EX1021	Request for *Ex Parte* Reexamination	Request for *Ex Parte* Reexamination of US Patent No. 11,634,781 dated May 22, 2023
EX1022	Order Granting Request for *Ex Parte* Reexamination	USPTO Order Granting Request for *Ex Parte* Reexamination of US Patent No. 11,634,781 dated June 29, 2023.
EX1023	Notice of Intent to Issue *Ex Parte* Reexamination Certificate	USPTO Notice of Intent to Issue *Ex Parte* Reexamination Certificate for US Patent No. 11, 634,781 dated Oct 18, 2023.
EX1024	Young 2007	GP Young et al., "New Stool Screening Tests for Colorectal Cancer," *Digestion*, 76:26-33 (2007).
EX1025	Olson	Jeff Olson et al., "DNA Stabilization is Critical for Maximizing Performance of Fecal DNA-Based Colorectal Cancer Tests," *Diagnostic Molecular Pathology*, 3:183-191 (2005).
EX1026	Melvin	Dorothy Melvin and Marion Brooke, "Laboratory Procedures for the Diagnosis of Intestinal Parasites", *U.S. Department of Health and Human Services Centers for Disease Control* (1982).
EX1027	Lapidus '178	U.S. Patent No. 5,952,178
EX1028	Lapidus '650	U.S. Patent No. 5,741,650
EX1029	Hoepffner	N. Hoepffner et al., "Comparative Evaluation of a New Bedside Faecal Occult Blood Test in a Prospective Multicentre Study," *Alimentary Pharmacology & Therapeutics*, 23:145-154 (2006).
EX1030	Nechvatal	Jordan Nechvatal et al., "Fecal Collection, Ambient Preservation, and

Exhibit	Short Name	Description
		DNA Extraction for PCR Amplification of Bacterial And Human Markers from Human Feces," *Journal of Microbiological Methods*, 72(2):124-32 (2008).
EX1031	Recorded Assignment	Recorded Assignment of US Patent No. 11,634,781 dated April 25, 2017.
EX1032	n/a	Intentionally Omitted
EX1033	Simon	JB Simon, "Occult Blood Screening for Colorectal Carcinoma: A Critical Review," *Gastroenterology*, 88:820-837 (1985).
EX1034	n/a	Intentionally Omitted
EX1035	Sidransky	D. Sidransky, "Identification of Ras Oncogene Mutations in the Stool of Patients with Curable Colorectal Tumors," *Science*, 256:102–105 (1992).
EX1036	n/a	Intentionally Omitted
EX1037	Müller	Hannes Müller et al., "Methylation Changes in Faecal DNA: A Marker for Colorectal Cancer Screening?" *Lancet*, 63:1283-1285 (2004).
EX1038	Schuebel	Kornel Schuebel et al., "Comparing the DNA Hypermethylome with Gene Mutations in Human Colorectal Cancer," *PLoS Genet*., 3:1709–1723 (2007).
EX1039	Shen	Lanlan Shen et al., "Integrated Genetic and Epigenetic Analysis Identifies Three Different Subclasses of Colon Cancer." *Proc Natl. Acad. Sci. U.S.A.,* 104(47): 18654–18659 (2007).
EX1040	Tagore	K.S. Tagore et al. "Review Article: The Evolution to Stool DNA Testing for Colorectal Cancer," *Aliment Pharmacol. Ther.,* 19: 1225-1233 (2004).

Exhibit	Short Name	Description
EX1041	Derks Printout	Printout of *Clinical Oncology* from Pubmed.
EX1042	Grow	U.S. Patent No. 5,198,365.
EX1043	Imperiale	Thomas Imperiale et al., "Fecal DNA Versus Fecal Occult Blood for Colorectal-Cancer Screening in an Average-Risk Population," *New England Journal of Medicine,* 351(26): 2704-2714 (2004).
EX1044	Ahlquist 2008	David Ahlquist et al., "Stool DNA and Occult Blood Testing for Screen Detection of Colorectal Neoplasia," *Annals of Internal Medicine*, 149(7): 441–W81 (2008).
EX1045	Rennert	Rennert et al., "Detecting K-Ras Mutations in Stool from Fecal Occult Blood Test Cards in Multiphasic Screening for Colorectal Cancer," *Cancer Letters*, 253: 258-264 (2007).
EX1046	Van Engeland	International Patent Application Publication Number WO2008/084219.
EX1047	Karl	Karl, et al., Improved Diagnosis of Colorectal Cancer Using a Combination of Fecal Occult Blood and Novel Fecal Protein Markers," *Clinical Gastroenterology and Hepatology*, 6:1122–1128 (2008).
EX1048	Ostrow	Donald Ostrow, "Tests for Fecal Occult Blood, in Clinical Methods: The History, Physical, and Laboratory Examinations." Boston: Butterworths; Chapter 98 (1990).
EX1049	Cleator	U.S. Patent No. 7,195,878.
EX1050	Kahi	Charles Kahi et al., "Screening, Surveillance, and Primary Prevention for Colorectal Cancer: A Review of the Recent Literature," *Gastroenterology,* 135: 380-399 (2008).

Exhibit	Short Name	Description
EX1051	White	Victoria White and Richard Miller, "Colorectal Cancer: Prevention and Early Diagnosis," *Medicine,* 35(6) 297-301 (2007).
EX1052	Zou	H Zou et al., "Highly Methylated Genes in Colorectal Neoplasia: Implications for Screening," *Cancer Epidemiol Biomarkers Preview,* 16(12):2686-96 (2007).
EX1053	Eguchi	Susumu Eguchi et al., "Mutations of the P53 Gene in Stool of Patients with Resectable Colorectal Cancer," *Cancer*, 77:1707–1710 (1996).
EX1054	Villa	E. Villa, et al., "Identification of Subjects at Risk for Colorectal Carcinoma through a Test Based on K-Ras Determination in the Stool," *Gastroenterology*, 110:1346–1353 (1996).
EX1055	Itzkowitz 2008	Steven Itzkowtiz, "A Simplified, Noninvasive Stool DNA Test for Colorectal Cancer Detection," *American Journal of Gastroenterology,* 103: 2862-2870 (2008).
EX1056	Boynton	Boynton et al., "DNA Integrity as a Potential Marker for Stool-based Detection of Colorectal Cancer," *Clinical Chemistry,* 49:7 1058–1065 (2003).
EX1057	Jessup	J. Milburn Jessup et al., "Diagnosing Colorectal Carcinoma: Clinical and Molecular Approaches," *A Cancer Journal for Clinicians,* 47(2):70-92 (1997).
EX1058	Chen	WD Chen et al., "Detection in Fecal DNA of Colon Cancer-Specific Methylation of the Nonexpressed

Exhibit	Short Name	Description
		Vimentin Gene." *Journal of National Cancer Institute,* 97:1124-1132 (2005).
EX1059	Li	L-C Li and R. Dahiya, "MethPrimer: Designing Primers for Methylation Pcrs," *Bioinformatics,* 18(11): 1427-1431 (2002).
EX1060	Jones Declaraton	Declaration of Brendan T. Jones
EX1061	Kanaoka 2004	Shigeru Kanaoka et al., "Potential Usefulness of Detecting Cyclooxygenase 2 Messenger RNA in Feces for Colorectal Cancer Screening," *Gastroenterology*, 127:422-427 (2004).
EX1062	Matsumura 1992	Y Matsumura and D Tarin "Significance of CD44 Gene Products for Cancer Diagnosis and Disease Evaluation," *Lancet*, 340: 1053-1058 (1992).
EX1063	Matsumura 1994	Y Mastumura et al., "Non-Invasive Detection of Malignancy by Identification of Unusual CD44 Gene Activity in Exfoliated Cancer Cells," *BMJ,* 308:619-624 (1994).
EX1064	Leung	Wai Leung et al., "Detection of Hypermethylated DNA or Cyclooxygenase-2 Messenger RNA in Fecal Samples of Patients with Colorectal Cancer or Polyps" *American Journal Gastroenterology*, 102: 1070-1076 (2007).
EX1065	Ahlquist 2000	D.A. Ahlquist et al., "Colorectal Cancer Screening by Detection of Altered Human DNA in Stool: Feasibility of a Multitarget Assay Panel," *Gastroenterology*, 119(5):1219-1227 (2000).
EX1066	Ahlquist 2000(b)	D.A. Ahlquist et al., "Molecular Stool Screening for Colorectal Cancer. Using

Exhibit	Short Name	Description
		DNA Markers May Be Beneficial, But Large Scale Evaluation is Needed." *BMJ*, 29;321(7256):254-5 (2000).
EX1067	Taylor	International Patent Application Publication Number WO2009/102788.
EX1068	Mahon	Suzanne Mahon, " Prevention and Screening of Gastrointestinal Cancers," *Seminars in Oncology Nursing,* 25(1): 15-31 (2009).
EX1069	Young 2004	G.P. Young, "Fecal Immunochemical Tests (FIT) vs. Office-Based Guaiac Fecal Occult Blood Test (FOBT)," *Practical Gastroenterology* 28(6): 46-56 (2004).
EX1070	Inbar	International Patent Application Publication Number WO97/25925.
EX1071	Hirata	I Hirata et al., "Usefulness of Fecal Lactoferrin and Hemoglobin in Diagnosis of Colorectal Diseases," *World Journal of Gastroenterology*, 14;13(10):1569-74 (2007).
EX1072	Ahlquist 1988	D.A. Ahlquist et al., "A Stool Collection Device: The First Step in Occult Blood Testing," *Annals of Internal Medicine*, (108)4:609-612 (1988).
EX1073	Lenhard Printout	Printout of *Clinical Gastroenterology and Hepatology* Website.
EX1074	Ahmed	Farid Ahmed et al., "Transcriptomic Molecular Markers for Screening Human Colon Cancer in Stool and Tissue," *Cancer Genomics and Proteomics* 4:1-20 (2007).
EX1075	Beaulieu	U.S. Patent No. 9,891,223.
EX1076	Itzkowitz Printout	Printout of *Clinical Gastroenterology and Hepatology* Website.

Exhibit	Short Name	Description
EX1077	Itzkowitz Press Release	Exact Sciences and Mount Sinai School of Medicine Press Release issued December 13, 2006.